FX4D
Comfort™ Series Fan Coil
Sizes 019 thru 061

Carrier
turn to the experts

Product Data

A10009

AIR HANDLER TECHNOLOGY AT ITS FINEST

The FX4D fan coils combine the proven technology of Carrier fan coil units with Puron®, the environmentally sound refrigerant. These fan coils are loaded with popular features. Factory-installed, refrigerant-specific thermostatic expansion valves (TXV) are standard with these fan coil designs. The designs feature contoured condensate pans with rugged, drain connections, ensuring that little water is left in the unit at the end of the cooling duty cycle. The lack of standing condensate and corrosion free pans improves IAQ and product life, features homeowners appreciate.

Standard features include grooved copper tubing and louvered aluminum fins. The large face areas of the refrigerant coils provide superior efficiency for high SEER and HSPF performance. Coil circuiting has also been updated to make the most of all Carrier heat pumps and air conditioners. Also units come with solid state fan controls, 1-in (25mm) thick insulation with R-value of 4.2, multi-speed motors, and fully-wettable coils. Units can accommodate factory- and/or field-installed heaters from 3 to 30 kW.

It also should be noted that the unique cabinet design of these fan coils meet new stringent regulations for cabinet air leakage - a requirement of 2% cabinet leakage rate when tested at 1.0 inches of static pressure.

The FX4D fan coil is the Puron® refrigeration design loaded with popular features. It comes in a pre-painted (taupe metallic) galvanized steel casing and is shipped with a cleanable, permanent framed filter, and a factory-supplied power plug. ArmorCoat™ provides a tin plating of the indoor coil's copper hairpins. This creates a barrier between the corrosion-causing elements and the coil. These fan coils utilize the latest in electronic commutation motor (ECM) technology through the use of high efficiency, X13, blower motors.

Downloaded from www.Manualslib.com manuals search engine

STANDARD FEATURES

- High efficiency ECM (electronic commutating motor) X-13 motors - all sizes
- Integrated motor controls have replaced integrated circuit board
- Large, grooved tube, louvered fin coils
- Efficient, quiet, time-tested blower housings and diffusers
- Sturdy, drainable condensate pans
- Cabinet construction features innovations designed to prevent cabinet sweating
- Tested for condensate disposal in much tougher conditions than Air Conditioning and Refrigeration Institute requirements
- Super-thick R-4.2 insulation with vapor barrier
- Pre-painted galvanized steel cabinet (taupe metallic)
- Cabinet design meets stringent regulations for 2% cabinet leakage rate when tested at 1.0 inches static pressure
- Installation-flexible, multipoise units
- Horizontal hanging provisions on cabinet
- No tools required to service filter
- Factory-supplied, cleanable and reusable filter
- Newly improved filter rack area filter door insulation added for improved air seal
- Factory-installed heater packages available (5- through 15-kW)
- 3- through 30-kW accessory heaters - field installed
- Factory-supplied power plug
- Easy plug-in provisions for heater installation
- Entry options for high and low voltage wiring hook-up
- Simple, 5-amp blade fuse (and a spare) to protect 40 VA transformer
- Easy coil inspection (removable, snap-in plug on A-coil models)
- Leak-preventing sweat connections
- Modular cabinets available on 037 through 061 sizes.
- Designed for manufactured housing applications.

ADDITIONAL FEATURES

FX4D

- Puron®, environmentally sound refrigerant
- Factory-installed Puron® refrigerant thermostatic expansion valves (TXV)
- Factory-installed heater packages available
- ArmorCoat™ coil protection available

Downloaded from www.Manualslib.com manuals search engine

MODEL NUMBER NOMENCLATURE

CARRIER FAN COILS

1	2	3	4	5	6	7	8	9	10	11	12
F	X	4	D	N	B	0	1	9	0	0	0

Product Type
Fan Coil, Multipoise with Puron

Electrical
N - 208/230v, 1 ph, 60 Hz

Cabinet Style
B - Modular
F - Single Piece

Heating Size
000 = No Heat
005 = 5kW
008 = 8 kW
010 = 10kW
015 = 15kW

Coil Coating
0 = Standard
T = ArmorCoat™

Capacity
019 = 18,000
025 = 24,000
031 = 30,000
037 = 36,000
043 = 42,000
049 = 48,000
061 = 60,000

FX4D

Puron™
the environmentally sound refrigerant

AHRI CERTIFIED™ www.ahridirectory.org
Use of the AHRI Certified TM Mark indicates a manufacturer's participation in the program For verification of certification for individual products, go to www.ahridirectory.org.

Certified System ™
ISO 9001
QMI-SAI Global

c UL US

ArmorCoat™

Downloaded from www.Manualslib.com manuals search engine

DIMENSIONS

UNIT	A	B	C	D	E	F	G	H	J	COIL CONFIGURATION SLOPE	COIL CONFIGURATION "A"	SHIPPING WT (LBS) NON TIN-COATED	SHIPPING WT (LBS) TIN-COATED
FX4DNF019	49 5/8"	17 5/8"	15 3/4"	15 5/8"	15 3/8"	23 1/8"	23 5/8"	–	17"	X	–	122	122
FX4DNF025	49 5/8"	17 5/8"	15 3/4"	15 5/8"	15 3/8"	23 1/8"	23 5/8"	–	17"	X	–	122	122
FX4DNF031	53 7/16"	21 1/8"	19 1/4"	19 1/8"	19 3/16"	26 15/16"	27 1/2"	–	19"	X	–	146	146
FX4DNF037	49 5/8"	21 1/8"	19 1/4"	19 1/8"	15 11/16"	23 7/16"	23 1/8"	–	–	–	X	157	157
FX4DNF043	49 5/8"	21 1/8"	19 1/4"	19 1/8"	15 11/16"	23 7/16"	23 1/8"	–	–	–	X	157	157
FX4DNF049	53 7/16"	24 11/16"	22 3/4"	22 11/16"	19 1/2"	27 1/4"	26 15/16"	–	–	–	X	185	185
FX4DNF061	59 3/16"	24 11/16"	22 3/4"	22 11/16"	25 1/4"	32 15/16"	32 5/8"	–	–	–	X	201	201

NOTE:

1. SERIES DESIGNATION IS THE 14TH POSITION OF UNIT PRODUCT NUMBER
2. ALL DIMENSIONS ARE IN "INCHES" UNLESS NOTED.

NOTE: ALLOW 21" FROM FRONT FOR SERVICE

UNIT CONNECTION SIZES

SUCTION: 018 THRU 025 - 5/8" I.D. SWEAT
030 THRU 037 - 3/4" I.D. SWEAT
042 THRU 061 - 7/8" I.D. SWEAT
LIQUID: 3/8" I.D. SWEAT
CONDENSATE: 3/4" FPT

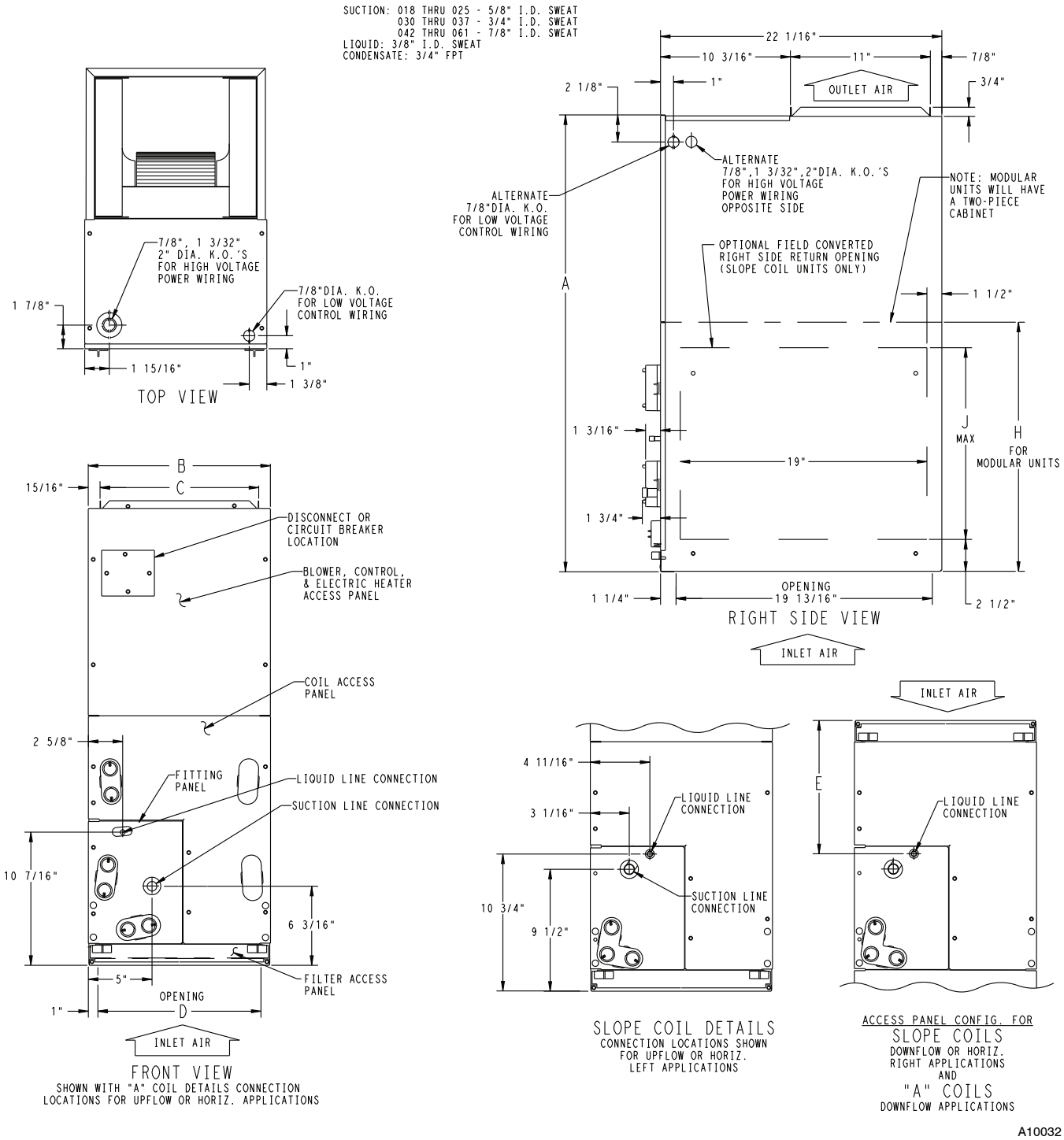

Fig. 1 - FX4D - English

FX4D

Downloaded from www.Manualslib.com manuals search engine

DIMENSIONS (cont.)

NOTES:
1. CONDENSATE PAN DRAIN CAPS NOT SHOWN FOR CLARITY.
2. ALL DIMENSIONS ARE IN "INCHES" UNLESS NOTED.

SLOPE COIL

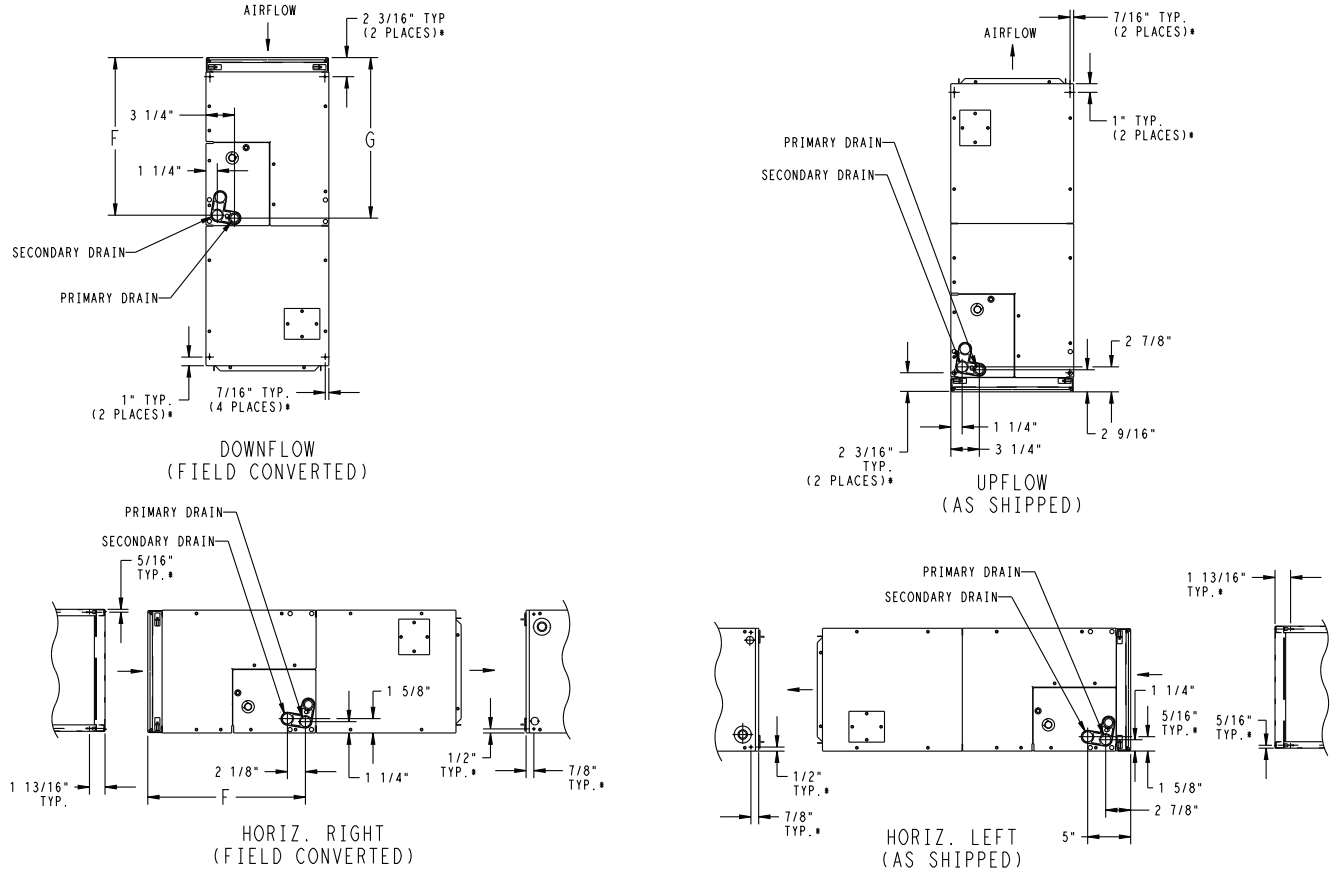

* HORIZONTAL MOUNT LOCATIONS - DIMPLES PROVIDED IN TOP PANEL, AND BACK OF CABINET. IN CABINET BOTTOM. HOLES PROVIDED .136" DIA. HORIZONTAL HANGING HARDWARE TO BE FIELD SUPPLIED.

A-COIL

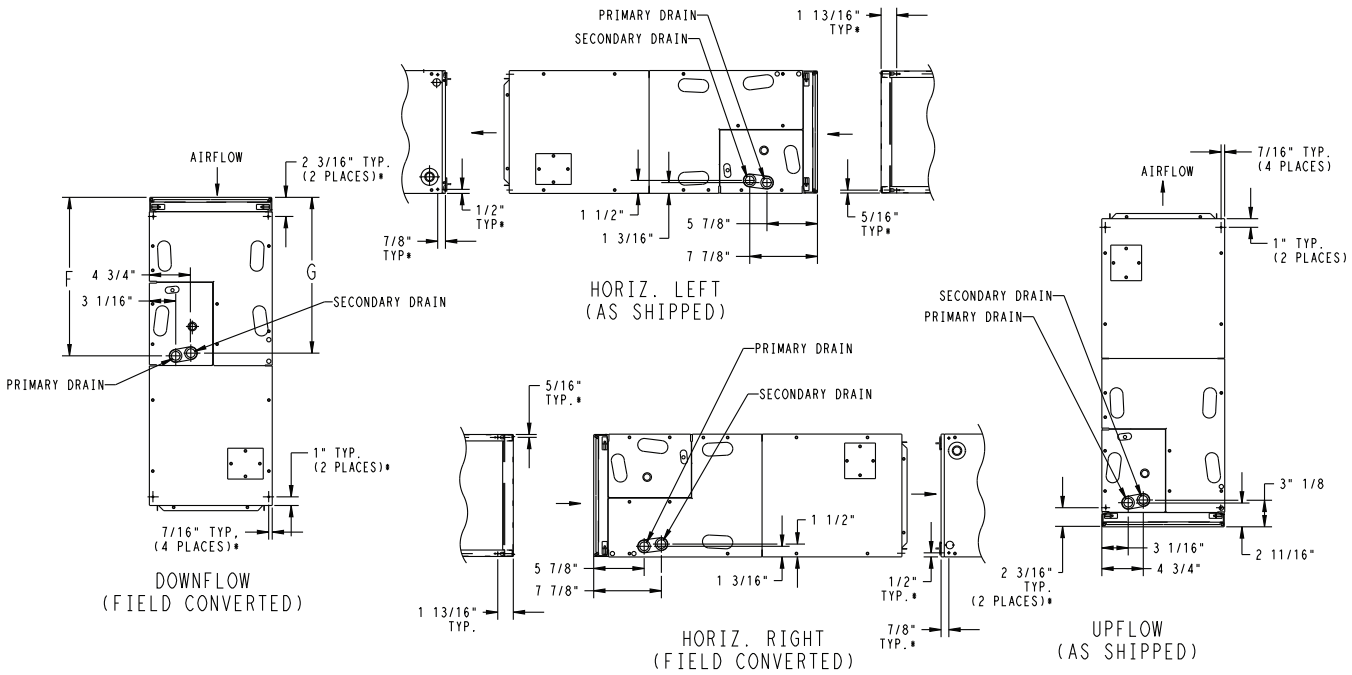

Fig. 2 - FX4D - English

FX4D

Downloaded from www.Manualslib.com manuals search engine

DIMENSIONS (cont.)

UNIT	A	B	C	D	E	F	G	H	J	COIL CONFIGURATION		SHIPPING WT (Kgs) NON TIN-COATED	SHIPPING WT (Kgs) TIN-COATED
										SLOPE	"A"		
FX4DNF019	1260.5	447.7	400.0	396.9	390.5	587.4	600.1	–	431.8	X	–	55.3	55.3
FX4DNF025	1260.5	447.7	400.0	396.9	390.5	587.4	600.1	–	431.8	X	–	55.3	55.3
FX4DNF031	1357.3	536.6	489.0	485.8	487.4	684.2	698.5	–	482.6	X	–	66.2	66.2
FX4DNF037	1260.5	536.6	489.0	485.8	398.5	595.3	587.4	–	–	–	X	71.2	71.2
FX4DNF043	1260.5	536.6	489.0	485.8	398.5	595.3	587.4	–	–	–	X	71.2	71.2
FX4DNF049	1357.3	627.1	577.8	576.3	495.3	692.2	684.2	–	–	–	X	84.1	84.1
FX4DNF061	1503.4	627.1	577.8	576.3	641.4	836.6	828.7	–	–	–	X	91.2	91.2

NOTE:

1. SERIES DESIGNATION IS THE 14TH POSITION OF UNIT PRODUCT NUMBER
2. ALL DIMENSIONS ARE IN "MM" UNLESS NOTED.

UNIT CONNECTION SIZES

SUCTION: 018 THRU 025 - 15.88 I.D. SWEAT
030 THRU 037 - 19.05 I.D. SWEAT
042 THRU 061 - 22.23 I.D. SWEAT
LIQUID: 9.53 I.D. SWEAT
CONDENSATE: 19.0 FPT

NOTE: ALLOW 533.4 FROM FRONT FOR SERVICE

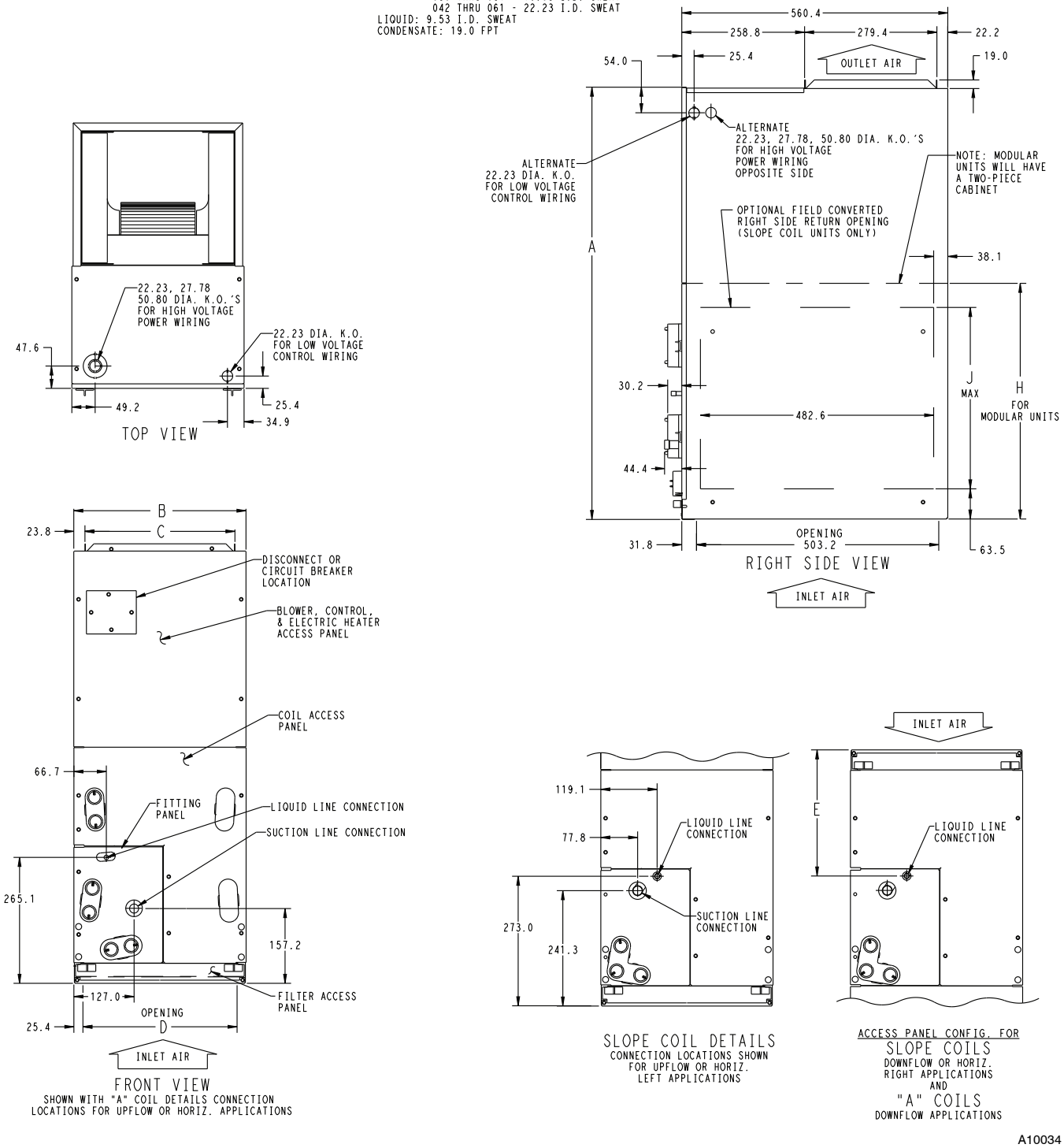

Fig. 3 - FX4D - Metric

FX4D

Downloaded from www.Manualslib.com manuals search engine

DIMENSIONS (cont.)

NOTES:
1. CONDENSATE PAN DRAIN CAPS NOT SHOWN FOR CLARITY.
2. ALL DIMENSIONS ARE IN "MM" UNLESS NOTED.

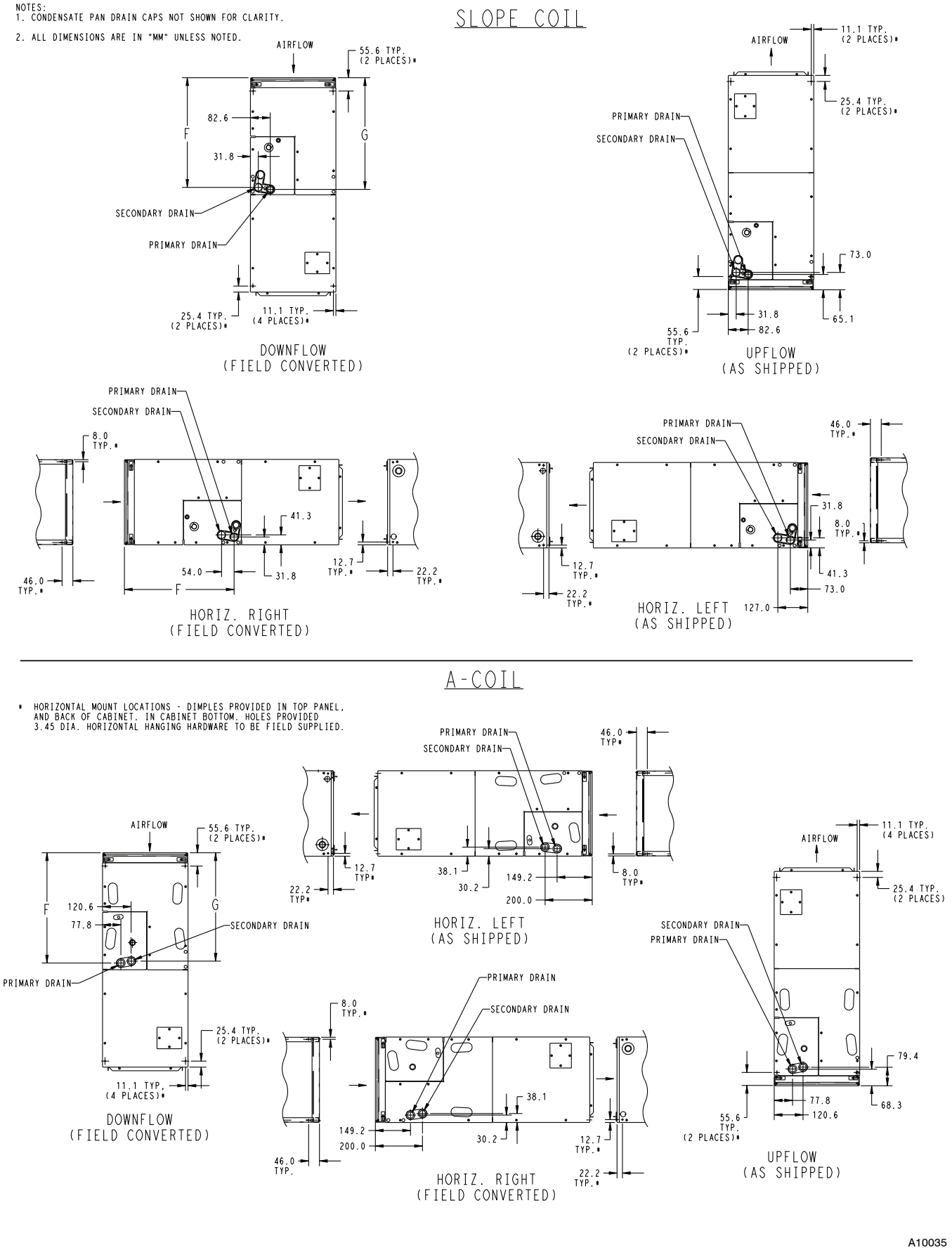

Fig. 4 - FX4D - Metric

FX4D

Downloaded from www.Manualslib.com manuals search engine

PHYSICAL DATA

ORDERING NO.	FACTORY INSTALLED HEAT (kW)	NOMINAL COOLING CAPACITY (Btuh)	DIMENSIONS			SHIPPING WEIGHT
			Height	Width	Depth	
FX4DNF0190,T)00	–	18,000	49 5/8–in 1261mm	17 5/8–in 447mm	22–1/16–in 560mm	122 lb 55 kg
FX4DNF019005	5					
FX4DNF025(0,T)00	–	24,000	49 5/8–in 1261mm	17 5/8–in 447mm	22–1/16–in 560mm	122 lb 55 kg
FX4DNF025005	5					
FX4DNF031(0,T)00	–	30,000	53 7/16–in 1357mm	21 1/8–in 536mm	22–1/16–in 560mm	146 lb 66 kg
FX4DNF031008	8					
FX4DNF037(0,T)00	–	36,000	49 5/8–in 1261mm	21 1/8–in 536mm	22–1/16–in 560mm	157 lb 71 kg
FX4DNF037010	10					
FX4DNF043(0,T)00	–	42,000	49 5/8–in 1260mm	21 1/8–in 536mm	22–1/16–in 560mm	157 lb 71 kg
FX4DNF043010	10					
FX4DNF049(0,T)00	–	48,000	53 7/16–in 1357mm	24 11/16–in 627mm	22–1/16–in 560mm	185 lb 84 kg
FX4DNF049010	10					
FX4DNF061(0,T)00	–	60,000	59 3/16–in 1503mm	24 11/16–in 627mm	22–1/16–in 560mm	201 lb 91 kg
FX4DNF061010	10					
FX4DNF061015	15					
FX4DNB031T00	–	30,000	53 7/16–in 1357mm	21 1/8–in 536mm	22–1/16–in 560mm	146 lb 66 kg
FX4DNB037T00	–	36,000	53 7/16–in 1357mm	21 1/8–in 536mm	22–1/16–in 560mm	175 lb 79kg
FX4DNB043T00	–	42,000	53 7/16–in 1357mm	21 1/8–in 536mm	22–1/16–in 560mm	175 lb 79kg
FX4DNB049T00	–	48,000	53 7/16–in 1357mm	24 11/16–in 627mm	22–1/16–in 560mm	185 lb 84 kg
FX4DNB061T00	–	60,000	59 3/16–in 1503mm	24 11/16–in 627mm	22–1/16–in 560mm	201 lb 91 kg

6th digit: B – Modular cabinet, F – Single piece cabinet
10th digit: 0 – Standard copper coil, T – ArmorCoat™

SPECIFICATIONS

MODEL FX4D	019	025	031	037	043	049	061
COIL							
Puron® Refrigerant Metering Device	TXV – factory installed hard–shutoff, bi–flow type for heat pump application						
TXV	2 ton		3 ton			4 ton	
Rows/Fins Per In.	3 / 14.5						
Face Area (Sq. Ft.)	2.97		3.46	4.45		5.93	7.42
Configuration	Slope			A			
FAN							
CFM (Nominal)	600	800	1000	1200	1400	1600	2000
Motor Type (ECM)	X–13	X–13	X–13	X–13	X–13	X–13	X–13
Motor Hp	1/3	1/3	1/2	1/2	1/2	3/4	3/4
FILTER							
21–1/2–in / 546 mm X	16–3/8–in / 417 mm		19–7/8–in / 505 mm			23–5/16–in / 585 mm	
CABINET CONFIGURATION OPTIONS							
	1–pc		1–pc / Modular				

Downloaded from www.Manualslib.com manuals search engine

PERFORMANCE DATA

AIRFLOW PERFORMANCE (CFM)

MODEL & SIZE	BLOWER SPEED	0.10	0.20	0.30	0.40	0.50	0.60
FX4D 019	Tap 5	776	745	696	660	609	572
	Tap 4	683	644	589	548	494	461
	Tap 3	683	644	589	548	494	461
	Tap 2	631	563	500	443	409	361
	Tap 1	625	524	457	417	367	319
FX4D 025	Tap 5	956	920	891	851	816	780
	Tap 4	825	795	757	722	674	634
	Tap 3	825	795	757	722	674	634
	Tap 2	726	695	635	598	543	509
	Tap 1	631	563	500	443	409	361
FX4D 031	Tap 5	1189	1151	1104	1050	1003	959
	Tap 4	1041	998	944	886	837	772
	Tap 3	1041	998	944	886	837	772
	Tap 2	924	876	817	752	704	660
	Tap 1	779	693	628	571	526	476
FX4D 037	Tap 5	1363	1332	1294	1253	1207	1157
	Tap 4	1237	1206	1160	1121	1070	1013
	Tap 3	1237	1206	1160	1121	1070	1013
	Tap 2	1095	1058	1007	951	888	824
	Tap 1	1014	885	773	673	609	549
FX4D 043	Tap 5	1519	1490	1454	1419	1379	1332
	Tap 4	1437	1403	1366	1333	1294	1245
	Tap 3	1437	1403	1366	1333	1294	1245
	Tap 2	1257	1226	1191	1141	1090	1033
	Tap 1	1237	1206	1160	1121	1070	1013
FX4D 049	Tap 5	1757	1725	1693	1653	1614	1576
	Tap 4	1664	1626	1593	1552	1517	1477
	Tap 3	1664	1626	1593	1552	1517	1477
	Tap 2	1459	1420	1379	1336	1298	1259
	Tap 1	1301	1241	1195	1150	1102	1039
FX4D 061	Tap 5	2030	1995	1961	1927	1888	1842
	Tap 4	1811	1775	1740	1703	1664	1613
	Tap 3	1811	1775	1740	1703	1664	1613
	Tap 2	1665	1632	1593	1556	1507	1453
	Tap 1	1462	1418	1371	1327	1278	1228

– Airflow outside 450 cfm/ton.

NOTES:

1. Airflow based upon dry coil at 230v with factory-approved filter and electric heater (2 element heater sizes 018 through 037, 3 element heater sizes 043 through 061).
2. Airflow at 208 volts is approximately the same as 230 volts because the X-13 motor is a constant torque motor. The torque doesn't drop off at the speeds the motor operates.
3. To avoid potential for condensate blowing out of drain pan prior to making drain trap:
   Return static pressure must be less than 0.40 in wc.
   Horizontal applications of 043 - 061 sizes must have supply static greater than 0.20 in wc.
4. Airflow above 400 cfm/ton on 049-061 size could result in condensate blowing off coil or splashing out of drain pan.

FX4D

Downloaded from www.Manualslib.com manuals search engine

GROSS COOLING CAPACITIES (MBH) - PURON® REFRIGERANT

UNIT SIZE	INDOOR COIL AIR		SATURATED TEMPERATURE LEAVING EVAPORATOR (°F / °C)														
			35 / 2			40 / 4			45 / 7			50 / 10			55 / 13		
	CFM	EWB	TC	SHC	BF	TC	SHC	BF	TC	SHC	BF	TC	SHC	BF	TC	SHC	BF
FX4D 019	525	72 / 22	36	19	0.00	33	17	0.00	28	15	0.00	24	13	0.00	19	11	0.01
		67 / 19	29	19	0.01	26	17	0.01	22	15	0.02	17	13	0.02	12	10	0.02
		62 / 17	23	19	0.02	20	17	0.02	16	15	0.02	12	12	0.07	10	10	0.24
	600	72 / 22	40	21	0.00	36	19	0.00	32	17	0.00	27	14	0.01	21	12	0.02
		67 / 19	33	21	0.02	29	19	0.02	24	17	0.02	19	14	0.02	13	12	0.03
		62 / 17	26	21	0.02	22	19	0.02	17	17	0.03	13	13	0.08	11	11	0.25
	675	72 / 22	44	23	0.00	40	21	0.00	35	18	0.00	29	16	0.02	23	13	0.02
		67 / 19	36	23	0.02	32	21	0.03	26	18	0.03	21	16	0.03	15	13	0.03
		62 / 17	29	24	0.03	24	21	0.03	19	19	0.04	15	15	0.10	12	12	0.26
FX4D 025	700	72 / 22	48	25	0.00	43	22	0.00	37	19	0.00	31	17	0.02	25	14	0.03
		67 / 19	39	25	0.03	34	22	0.03	28	20	0.03	22	17	0.03	16	14	0.04
		62 / 17	31	25	0.03	26	23	0.03	20	20	0.04	16	16	0.10	13	13	0.26
	800	72 / 22	53	27	0.00	47	24	0.00	41	21	0.01	35	18	0.03	27	15	0.04
		67 / 19	43	28	0.04	37	25	0.04	31	22	0.04	25	19	0.04	17	16	0.05
		62 / 17	34	28	0.04	29	25	0.04	23	22	0.05	18	18	0.12	15	15	0.28
	900	72 / 22	57	30	0.00	51	27	0.00	45	23	0.03	38	20	0.04	30	17	0.05
		67 / 19	47	30	0.05	41	27	0.05	34	24	0.05	27	21	0.05	19	17	0.06
		62 / 17	37	31	0.05	31	28	0.05	25	24	0.06	20	20	0.14	16	16	0.29
FX4D 031	875	72 / 22	59	30	0.00	53	27	0.00	46	24	0.01	38	20	0.02	30	17	0.03
		67 / 19	48	31	0.03	42	28	0.03	35	24	0.04	27	21	0.04	19	17	0.04
		62 / 17	38	31	0.04	32	28	0.04	25	24	0.04	20	20	0.11	16	16	0.27
	1000	72 / 22	65	33	0.00	58	30	0.00	51	26	0.02	42	23	0.04	33	19	0.04
		67 / 19	53	34	0.04	46	31	0.04	38	27	0.05	30	23	0.05	21	19	0.05
		62 / 17	42	35	0.05	35	31	0.05	28	27	0.06	22	22	0.13	18	18	0.29
	1125	72 / 22	71	36	0.00	63	33	0.00	55	29	0.03	46	25	0.05	36	20	0.05
		67 / 19	58	37	0.05	50	33	0.05	42	29	0.06	33	25	0.06	23	21	0.07
		62 / 17	46	38	0.06	38	34	0.06	30	30	0.07	24	24	0.15	20	20	0.30
FX4D 037	1050	72 / 22	67	36	0.00	60	32	0.00	52	28	0.00	44	24	0.02	35	20	0.03
		67 / 19	54	37	0.03	47	33	0.03	40	29	0.03	31	25	0.03	22	20	0.04
		62 / 17	43	37	0.03	36	33	0.03	29	29	0.04	22	22	0.10	18	18	0.26
	1200	72 / 22	74	40	0.00	66	36	0.00	58	31	0.01	48	27	0.03	38	22	0.04
		67 / 19	60	41	0.04	52	36	0.04	44	32	0.04	35	27	0.04	24	23	0.05
		62 / 17	48	41	0.04	40	37	0.04	32	32	0.05	25	25	0.12	21	21	0.28
	1350	72 / 22	81	43	0.00	72	39	0.00	63	34	0.03	53	30	0.04	41	25	0.05
		67 / 19	66	45	0.05	57	40	0.05	48	35	0.05	38	30	0.05	27	25	0.06
		62 / 17	52	46	0.05	44	41	0.05	35	36	0.06	28	28	0.14	23	23	0.29
FX4D 043	1225	72 / 22	79	41	0.00	71	37	0.00	62	33	0.02	52	28	0.03	41	23	0.04
		67 / 19	64	42	0.04	56	38	0.04	47	33	0.04	37	29	0.04	26	24	0.05
		62 / 17	51	43	0.04	43	38	0.04	34	34	0.05	27	27	0.12	22	22	0.28
	1400	72 / 22	87	46	0.00	78	41	0.00	68	36	0.03	57	31	0.04	45	26	0.05
		67 / 19	71	47	0.05	62	42	0.05	52	37	0.05	41	32	0.05	29	26	0.06
		62 / 17	56	48	0.06	47	43	0.06	38	38	0.06	30	30	0.14	25	25	0.29
	1575	72 / 22	95	50	0.00	85	45	0.00	74	39	0.04	62	34	0.05	48	28	0.06
		67 / 19	77	51	0.06	67	46	0.06	56	40	0.06	44	35	0.07	31	29	0.07
		62 / 17	61	52	0.07	51	47	0.07	41	41	0.08	33	33	0.17	27	27	0.31
FX4D 049	1400	72 / 22	90	48	0.00	81	43	0.00	71	38	0.00	59	32	0.02	47	27	0.03
		67 / 19	73	49	0.03	64	44	0.03	54	38	0.03	42	33	0.03	30	27	0.04
		62 / 17	58	49	0.03	49	44	0.03	39	39	0.04	30	30	0.10	25	25	0.26
	1600	72 / 22	100	53	0.00	89	48	0.00	78	42	0.01	65	36	0.03	51	30	0.04
		67 / 19	81	54	0.04	71	48	0.04	59	43	0.04	47	36	0.04	33	30	0.05
		62 / 17	65	55	0.04	54	49	0.04	43	43	0.05	34	34	0.12	28	28	0.28
	1800	72 / 22	109	58	0.00	97	52	0.00	85	46	0.03	71	39	0.04	56	33	0.05
		67 / 19	89	59	0.05	77	53	0.05	65	47	0.05	51	40	0.05	36	33	0.06
		62 / 17	70	60	0.05	59	54	0.05	47	48	0.06	37	37	0.14	31	31	0.29
FX4D 061	1600	72 / 22	109	57	0.00	98	51	0.00	86	45	0.00	73	39	0.01	58	32	0.02
		67 / 19	89	58	0.02	78	52	0.02	66	46	0.02	52	39	0.03	37	33	0.03
		62 / 17	71	59	0.03	60	52	0.03	48	46	0.03	37	37	0.09	31	31	0.24
	1750	72 / 22	117	61	0.00	105	55	0.00	92	48	0.01	78	41	0.02	62	35	0.02
		67 / 19	95	62	0.03	84	56	0.03	70	49	0.03	56	42	0.03	40	35	0.03
		62 / 17	76	63	0.03	64	56	0.03	51	50	0.04	40	40	0.10	33	33	0.25
	2000	72 / 22	129	67	0.00	116	60	0.00	102	53	0.02	86	46	0.03	68	38	0.03
		67 / 19	105	69	0.04	92	62	0.04	78	54	0.04	62	47	0.04	44	39	0.05
		62 / 17	84	70	0.04	71	63	0.04	57	55	0.05	45	45	0.12	37	37	0.27

See Notes following table.

Downloaded from www.Manualslib.com manuals search engine

CFM – Cubic Ft per Minute
SHC – Gross Sensible Capacity 1000 Btuh
EWB – Entering Wet Bulb °F (°C)
BF – Bypass Factor
LWB – Leaving Wet Bulb °F (°C)
MBH – 1000 Btuh
TC – Gross Cooling Capacity 1000 Btuh

NOTES:

1. Contact manufacturer for cooling capacities at conditions other than shown in table.
2. Formulas:
   Leaving db = entering db $- \frac{\text{sensible heat cap.}}{1.09 \times \text{CFM}}$
   Leaving wb = wb corresponding to enthalpy of air leaving coil (h_{lwb})
   $h_{lwb} = h_{ewb} - \frac{\text{total capacity (Btuh)}}{4.5 \times \text{CFM}}$
   where h_{ewb} = enthalpy of air entering coil. Direct interpolation is permissible. Do not extrapolate.
3. SHC is based on 80°F (27°C) db temperature of air entering coil. Below 80°F (27°C) db, subtract (Correction Factor x CFM) from SHC. Above 80°F (27°C) db, add (Correction Factor x CFM) to SHC.
4. Bypass Factor = 0 indicates no psychometric solution. Use bypass factor of next lower EWB for approximation.

SHC CORRECTION FACTOR

BYPASS FACTOR	ENTERING AIR DRY–BULB TEMPERATURE (°F)					
	79	78	77	76	75	Under 75
	81	82	83	84	85	Over 85
	ENTERING AIR DRY–BULB TEMPERATURE (°C)					
	26	25	25	24	24	Under 75
	27	28	28	29	29	Over 85
	Correction Factor					
0.10	.098	1.96	2.94	3.92	4.91	Use formula shown below
0.20	0.87	1.74	2.62	3.49	4.36	
0.30	0.76	1.53	2.29	3.05	3.82	

Interpolation is permissible.
Correction Factor = 1.09 x (1 – BF) x (db – 80)

FX4D

MINIMUM CFM AND MOTOR SPEED SELECTION

FAN COIL SIZES FX	HEATER kW									
	3	5	8	9	10	15	18	20	24	30
019	525	525	525	—	600*	—	—	—	—	—
025	700	700	700	—	700	775*	—	—	—	—
031	—	875	875	—	875	875	—	1060*	—	—
037	—	1050	970	970	970	920	—	1040	—	—
043	—	—	1225	1225	1225	1225	1225	1225	—	—
049	—	—	1400	1400	1400	1400	1400	1400	1400	1400
061	—	—	1750	1750	1750	1750	1750	1750	1750	1750

* Indicates medium speed (blue). All other motor speeds at low tap.

AIR DELIVERY PERFORMANCE CORRECTION COMPONENT PRESSURE DROP (in wc) AT INDICATED AIRFLOW (DRY-TO-WET COIL)

FX SIZE	CFM															
	500	600	700	800	900	1000	1100	1200	1300	1400	1500	1600	1700	1800	1900	2000
019	0.034	0.049	0.063	– –	– –	– –	– –	– –	– –	– –	– –	– –	– –	– –	– –	– –
025	0.016	0.027	0.038	0.049	0.059	– –	– –	– –	– –	– –	– –	– –	– –	– –	– –	– –
031	– –	– –	– –	0.049	0.059	0.070	0.080	– –	– –	– –	– –	– –	– –	– –	– –	– –
037	– –	– –	– –	– –	– –	0.055	0.064	0.073	0.081	– –	– –	– –	– –	– –	– –	– –
043	– –	– –	– –	– –	– –	– –	– –	0.049	0.056	0.063	0.070	– –	– –	– –	– –	– –
049	– –	– –	– –	– –	– –	– –	– –	– –	– –	0.038	0.043	0.049	0.054	0.059	– –	– –
061	– –	– –	– –	– –	– –	– –	– –	– –	– –	– –	– –	0.027	0.031	0.035	0.039	0.043

Downloaded from www.Manualslib.com manuals search engine

FACTORY-INSTALLED FILTER STATIC PRESSURE DROP (in wc)

UNIT SIZE FX4D	CFM								
	400	600	800	1000	1200	1400	1600	1800	2000
019, 025	0.012	0.022	0.048	0.072	–	–	–	–	–
031, 037, 043	–	–	0.036	0.051	0.07	0.092	0.12	–	–
049, 061	–	–	–	–	–	0.073	0.086	0.105	0.13

ELECTRIC HEATER STATIC PRESSURE DROP (in wc)

019 – 037			043 – 061		
HEATER ELEMENTS	kW	EXTERNAL STATIC PRESSURE CORRECTION	HEATER ELEMENTS	KW	EXTERNAL STATIC PRESSURE CORRECTION
0	0	+.02	0	0	+.04
1	3, 5	+.01	2	8, 10	+.02
2	8, 10	0	3	9, 15	0
3	9, 15	–.02	4	20	–.02
4	20	–.04	6	18, 24, 30	–.10

The airflow performance data was developed using fan coils with 10–kW electric heaters (2 elements) in the 019 through 037 size units and 15–kW heaters (3 elements) in the 043through 061 size units. For fan coils with heaters of a different number of elements, the external available static at a given CFM from the curve may be corrected by adding or subtracting available external static pressure as indicated above.

FX4D

ACCESSORY ELECTRIC HEATERS

HEATER PART NO.	kW @ 240V	VOLTS/ PH	STAGES (kW OPERATING)	INTERNAL CIRCUIT PROTECTION	FAN COIL SIZE USED WITH	HEATING CAP.** @ 230V
KFCEH0401N03	3	230/1	3	None	018–024	9,400
KFCEH0501N05	5	230/1	5	None	018–060	15,700
KFCEH0801N08	8	230/1	8	None	018–060	25,100
KFCEH0901N10	10	230/1	10	None	018–060	31,400
KFCEH3201F20	20	230/1	5, 20	Fuse‡	030–060	62,800
KFCEH1601315	15	230/3	5, 15	None	036–060	47,100
KFCEH2001318	18	230/3	6, 12, 18	None	042–060	56,500
KFCEH3401F24	24	230/3*	8, 16, 24	Fuse	048, 060	78,300
KFCEH3501F30	30	230/3*	10, 20, 30	Fuse	048, 060	94,100
KFCEH2401C05	5	230/1	5	Circuit Breaker	018–060	15,700
KFCEH2501C08	8	230/1	8	Circuit Breaker	018–060	25,100
KFCEH2601C10	10	230/1	10	Circuit Breaker	018–060	31,400
KFCEH3301C20	20	230/1	5, 20	Circuit Breaker	030–060	62,800
KFCEH2901N09	9	230/1†	3, 9	None	036–060	28,200
KFCEH3001F15	15	230/1	5, 15	Fuse‡	024–060	47,100
KFCEH3101C15	15	230/1	5, 15	Circuit Breaker	024–060	47,100

* Field convertible to 1 phase.
† Field convertible to 3 phase.
‡ Single point wiring kit required for these heaters in Canada.
** Blower Motor heat not included.

ESTIMATED SOUND POWER LEVEL (dBA)

UNIT SIZE FX	CONDITIONS		OCTAVE BAND CENTER FREQUENCY*						
	CFM	Ext Static Pressure	63	125	250	500	1000	2000	4000
019	600	0.25	64.7	60.7	56.7	53.7	51.7	49.7	45.7
025	800	0.25	66.0	62.0	58.0	55.0	53.0	51.0	47.0
031	1000	0.25	67.0	63.0	59.0	56.0	54.0	52.0	48.0
037	1200	0.25	67.8	63.8	59.8	56.8	54.8	52.8	48.8
043	1400	0.25	68.4	64.4	60.4	57.4	55.4	53.4	49.4
049	1600	0.25	69.0	65.0	61.0	58.0	56.0	54.0	50.0
061	2000	0.25	70.0	66.0	62.0	59.0	57.0	55.0	51.0

* Estimated sound power levels have been derived using the method described in the 1987 ASHRAE HVAC Systems & Applications Handbook, Chapter 52, p. 52.7.

Downloaded from www.Manualslib.com manuals search engine

ELECTRICAL DATA FOR UNITS WITH FACTORY-INSTALLED HEAT

FX4DNF MODEL NO.	MTR HP	MTR FLA	VOLTS/PH/HZ	HEAT PACK INSTALLED MKFCEH	SINGLE CIRCUIT			DUAL CIRCUIT					
					Heater Amps	MCA	MOCP	Htr. Amps	MCA	MOCP	Htr. Amps	MCA	MOCP
								L1/L2	L1/L2	L1/L2	L3/L4	L3/L4	L3/L4
019005	1/3	2.8	208/230/1/60	0501N05	18.1/20.0	26.1/28.5	30/30	N/A	N/A	N/A	N/A	N/A	N/A
025005	1/3	2.8	208/230/1/60	0501N05	18.1/20.0	26.1/28.5	30/30	N/A	N/A	N/A	N/A	N/A	N/A
031008	1/2	4.1	208/230/1/60	0801N08	28.9/32.0	41.3/45.2	45/50	N/A	N/A	N/A	N/A	N/A	N/A
037010	1/2	4.1	208/230/1/60	0901N10	36.2/40.0	50.4/55.1	60/60	N/A	N/A	N/A	N/A	N/A	N/A
043010	1/2	4.1	208/230/1/60	0901N10	36.2/40.0	50.4/55.1	60/60	N/A	N/A	N/A	N/A	N/A	N/A
049010	3/4	6.0	208/230/1/60	0901N10	36.2/40.0	52.8/57.5	60/60	N/A	N/A	N/A	N/A	N/A	N/A
061010	3/4	6.0	208/230/1/60	0901N10	36.2/40.0	52.8/57.5	60/60	N/A	N/A	N/A	N/A	N/A	N/A
061(0,T)015	3/4	6.0	208/230/1/60	1501F15	54.2/59.9	75.3/82.4	80/90	36.2/40.0	52.8/57.5	60/60	18.1/20.0	22.6/25.0	25/25

MCA – Minimum Circuit Amps
MOCP – Maximum Overcurrent Protection

ELECTRICAL DATA FOR UNITS WITHOUT ELECTRICAL HEAT

MODEL NO.	MTR HP	MTR FLA	VOLTS/PH/HZ	SINGLE CIRCUIT		BRANCH CIRCUIT MIN WIRE SIZE* AWG
				MCA	MAXIMUM OVERCURRENT PROTECTION	
FX4DNF019(0,T)00	1/3	2.8	208/230/1/60	3.5	15	14
FX4DNF025(0,T)00	1/3	2.8	208/230/1/60	3.5	15	14
FX4DNF031(0,T)00	1/2	4.1	208/230/1/60	5.1	15	14
FX4DNF037(0,T)00	1/2	4.1	208/230/1/60	5.1	15	14
FX4DNF043(0,T)00	1/2	4.1	208/230/1/60	5.1	15	14
FX4DNF049(0,T)00	3/4	6.0	208/230/1/60	7.5	15	14
FX4DNF061(0,T)00	3/4	6.0	208/230/1/60	7.5	15	14
FX4DNB031T00	1/2	4.1	208/230/1/60	5.1	15	14
FX4DNB037T00	1/2	4.1	208/230/1/60	5.1	15	14
FX4DNB043T00	1/2	4.1	208/230/1/60	5.1	15	14
FX4DNB049T00	3/4	6.0	208/230/1/60	7.5	15	14
FX4DNB061T00	3/4	6.0	208/230/1/60	7.5	15	14

* Use copper wire only. Use 75°C only in this application. When using non–metallic (NM) sheathed cable, wire size required should be based on that of 60°C conductors, instead of wire sizes shown in table above per NEC Article 336–26.

NOTE: If branch circuit wire length exceeds 100 ft (30 m), consult NEC 215–2 to determine maximum wire length. Use 2% voltage drop.

FLA – Full Load Amps

Downloaded from www.Manualslib.com manuals search engine

ACCESSORY ELECTRIC HEATER ELECTRICAL DATA

HEATER PART NO.	kW		PHASE	INTERNAL CIRCUIT PROTECTION	HEATER AMPS 208/230V			BRANCH CIRCUIT														
								Min Ampacity 208/230V*			Min Wire Size (AWG) 208/230V†			Min Gnd Wire Size 208/230V			Max Fuse/Ckt Bkr Amps 208/230V			Max Wire Length 208/230V (Ft)‡		
					Single Circuit	Dual Circuit		Single Circuit	Dual Circuit		Single Circuit	Dual Circuit		Single Circuit	Dual Circuit		Single Circuit	Dual Circuit		Single Circuit	Dual Circuit	
	240v	208v				L1,l2	L3,L4		L1,L2	L3,L4		L1, L2	L3, L4		L1, L2	L3,L4		L1,L2	L3,L4		L1,L2	L3,L4
KFCEH0401N03	3	2.3	1	None	10.9/12.0	—	—	15.9/17.3	—	—	12/12	—	—	12/12	—	—	20/20	—	—	67/68	—	—
KFCEH0501N05[1]	5	3.8	1	None	18.1/20.0	—	—	26.0/28.4	—	—	10/10	—	—	10/10	—	—	30/30	—	—	66/66	—	—
KFCEH0501N05[2]	5	3.8	1	None	18.1/20.0	—	—	31.2/33.5	—	—	8/8	—	—	10/10	—	—	35/35	—	—	85/88	—	—
KFCEH2401C05[1]	5	3.8	1	Ckt Bkr	18.1/20.0	—	—	26.0/28.4	—	—	10/10	—	—	10/10	—	—	30/30	—	—	66/66	—	—
KFCEH2401C05[2]	5	3.8	1	Ckt Bkr	18.1/20.0	—	—	31.2/33.5	—	—	8/8	—	—	10/10	—	—	35/35	—	—	85/88	—	—
KFCEH0801N08	8	6.0	1	None	28.9/32.0	—	—	44.7/48.5	—	—	8/8	—	—	10/10	—	—	45/50	—	—	59/60	—	—
KFCEH2501C08	8	6.0	1	Ckt Bkr	28.9/32.0	—	—	44.7/48.5	—	—	8/8	—	—	10/10	—	—	45/50	—	—	59/60	—	—
KFCEH2901N09	9	6.8	1	None	32.8/36.0	—	—	49.5/53.5	—	—	8/6	—	—	10/10	—	—	50/60	—	—	54/87	—	—
KFCEH2901N09**	9	6.8	3	None	18.8/20.8	—	—	32.0/34.5	—	—	8/8	—	—	10/10	—	—	35/35	—	—	83/85	—	—
KFCEH0901N10	10	7.5	1	None	36.2/40.0	—	—	53.8/58.5	—	—	6/6	—	—	10/10	—	—	60/60	—	—	78/80	—	—
KFCEH2601C10	10	7.5	1	Ckt Bkr	36.2/40.0	—	—	53.8/58.5	—	—	6/6	—	—	10/10	—	—	60/60	—	—	78/80	—	—
KFCEH3001F15	15	11.3	1	Fuse	54.2/59.9	36.2/40.0	18.1/20.0	76.3/83.4	53.8/58.5	22.7/25.0	4/4	6/6	10/10	8/8	10/10	10/10	80/90	60/60	25/25	88/89	78/80	75/76
KFCEH3101C15	15	11.3	1	Ckt Bkr	—	36.2/40.0	18.1/20.0	—	53.8/58.5	22.7/25.0	—	6/6	10/10	—	10/10	10/10	—	60/60	25/25	—	78/80	75/76
KFCEH1601315	15	11.3	3	None	31.3/34.6	—	—	47.7/51.8	—	—	8/6	—	—	10/10	—	—	50/60	—	—	56/90	—	—
KFCEH2001318	18	13.5	3	None	37.6/41.5	—	—	55.5/60.4	—	—	6/6	—	—	10/8	—	—	60/70	—	—	76/77	—	—
KFCEH3201F20	20	15.0	1	Fuse	72.3/79.9	36.2/40.0	36.2/40.0	98.9/108.4	53.8/58.5	45.3/50.0	3/2	6/6	8/8	8/6	10/10	10/10	100/110	60/60	50/50	85/109	78/80	59/59
KFCEH3301C20	20	15.0	1	Ckt Bkr	—	36.2/40.0	36.2/40.0	—	53.8/58.5	45.3/50.0	—	6/6	8/8	—	10/10	10/10	—	60/60	50/50	—	78/80	59/59
KFCEH3401F24††	24	18.0	3	Fuse	50.1/55.4	—	—	71.2/77.8	—	—	4/4	—	—	8/8	—	—	80/80	—	—	94/95	—	—
	24	18.0	1	Fuse	86.7/95.5	—	—	116.9/127.9	—	—	1/1	—	—	6/6	—	—	125/150	—	—	115/116	—	—
KFCEH3501F30††	30	22.5	3	Fuse	62.6/69.2	—	—	86.8/95.0	—	—	3/3	—	—	8/8	—	—	90/100	—	—	97/98	—	—
	30	22.5	1	Fuse	109.0/120.0	—	—	144.8/158.5	—	—	0/00	—	—	6/6	—	—	150/175	—	—	117/150	—	—

FIELD MULTIPOINT WIRING OF 24-AND 30-kW SINGLE PHASE

HEATER PART NO.	kW		PHASE	HEATER AMPS 208/230V			MIN AMPACITY 208/230V*			MIN WIRE SIZE (AWG) 208/230V†			MIN GND WIRE SIZE 208/230V	MAX FUSE/CKT BKR AMPS 208/230V			MAX WIRE LENGTH 208/230V (FT)‡		
	240V	208V		L1,L2	L3,L4	L5,L6	L1,L2	L3,L4	L5,L6	L1,L2	L3,L4	L5,L6		L1,L2	L3,L4	L5,L6	L1,L2	L3,L4	L5,L6
KFCEH3401F24††	24	18.0	1	28.9/32.0	28.9/32.0	28.9/32.0	44.7/48.5	36.2/40.0	36.2/40.0	8/8	8/8	8/8	10/10	45/50	40/40	40/40	59/60	73/73	73/73
KFCEH3501F30††	30	22.5	1	36.2/40.0	36.2/40.0	36.2/40.0	53.8/58.5	45.3/50.0	45.3/50.0	6/6	8/8	8/8	10/10	60/60	50/50	50/50	78/80	59/59	59/59

* Includes blower motor amps of largest fan coil used with heater.

† Copper wire must be used. If other than uncoated (non–plated), 75°C ambient, copper wire (solid wire for 10 AWG and smaller, stranded wire for larger than 10 AWG) is used, consult applicable tables of the National Electric Code (ANSI/NFPA 70).

‡ Length shown is as measured 1 way along wire path between unit and service panel for a voltage drop not to exceed 2%.

** Field convertible to 3 phase.

†† Field convertible to 1 phase, single or multiple supply circuit.

NOTES:

1. For fan coil sizes 018–037.
2. For fan coil sizes 042–061.
3. Single circuit application of F15 and F20 heaters requires single–point wiring kit accessory.

Downloaded from www.Manualslib.com manuals search engine

HEATER ELECTRICAL DATA

FACTORY-INSTALLED HEATER OPTIONS*

MODEL	019	025	031	037	043	049	061
FX4DNF	5	5	8	10	10	10	10, 15

* For field–installed heater/fan coil combinations, see Accessory Electric Heaters.

ELECTRIC HEATER INTERNAL PROTECTION

HEATER kW	PHASE	FUSE QTY/SIZE	CKT BKR* QTY/SIZE
5	1	—	1/60
8	1	—	1/60
9	1/3	—	—
10	1	—	1/60
15	1	2/30–2/60	2/60
15	3	—	—
18	3	—	—
20	1	4/60	2/60
24	1/3	6/60	—
30	1/3	6/60	—

* All circuit breakers are 2 pole.

When using units with 20-, 24-, and 30-kW electric heaters, maintain a 1-in. (25 mm) clearance from combustible materials to discharge plenum and ductwork and maintain a distance of 36 in. (914mm) from the unit. Use an accessory downflow base to maintain proper clearance on downflow installations. Use flexible connectors between ductwork and unit to prevent transmission of vibration. When electric heater is installed, use heat resistant material for flexible connector between ductwork and unit at discharge connection. Ductwork passing through unconditioned space must be insulated and covered with vapor barrier

ACCESSORIES

	ITEM	ACCESSORY PART NO.*	FAN COIL SIZE USED WITH
1.	Disconnect Kit	KFADK0201DSC	Cooling controls and heaters 3– through 10–kW
2.	Downflow Base Kit	KFACB0201CFB	019, 025
		KFACB0301CFB	031, 037, 043
		KFACB0401CFB	049, 061
3.	Downflow Conversion Kit †	KFADC0201SLP	Slope Coil Units — 019, 024, 031
		KFADC0401ACL	A–Coil Units — 037, 043, 049, 061
4.	Downflow/Horizontal Conversion Gasket Kit	KFAHD0101SLP	All
5.	Horizontal Water Management Kit (25 pack) ‡	KFAHC0125AAA	All
6.	Single–Point Wiring Kit	KFASP0101SPK	Only with 15– and 20–kW Fused Heaters
7.	Filter Kit (12 Pack)	KFAFK0112SML	NA
		KFAFK0212MED	019, 025
		KFAFK0312LRG	031 037, 043
		KFAFK0412XXL	049, 061
8.	Fan Coil Filter Cabinet (Fan Coil Filter Media)	FNCCABCC0014 (FILXXFNC0014)	NA
		FNCCABCC0017 (FILXXFNC0017)	019, 025
		FNCCABCC0021 (FILXXFNC0021)	031, 037, 043
		FNCCABCC0024 (FILXXFNC0024)	049, 061
9.	PVC Condensate Trap Kit (50 pack)	KFAET0150ETK	All
10.	Air Cleaner 240–volt Conversion Kit	KEAVC0201240	All

* Factory authorized and listed, field–installed.
† KFAHD0101SLP must also be purchased for downflow applications.
‡ KFAHD0101SLP must also be purchased for downflow or horizontal applications.

Downloaded from www.Manualslib.com manuals search engine

ACCESSORY KITS DESCRIPTION SUGGESTED AND REQUIRED USE

1. **Disconnect Kit**
   The kit is used to disconnect electrical power to the fan coil so service or maintenance may be performed safely.
   SUGGESTED USE: Units for 3- through 10-kW electric resistance heaters and cooling controls.
2. **Downflow Base Kit**
   This kit is designed to provide a 1-in. minimum clearance between unit discharge plenum, ductwork, and combustible materials. It also provides a gap-free seal with the floor.
   REQUIRED USE: This kit must be used whenever fan coils are used in downflow applications.
3. **Downflow Conversion Kit**
   Fan coils are shipped from the factory for upflow or horizontal-left applications. Downflow conversion kits provide proper condensate water drainage and support for the coil when used in downflow applications. Separate kits are available for slope coils and A-coils.
   REQUIRED USE: This kit must be used whenever fan coils are used in downflow applications.
4. **Downflow/Horizontal Conversion Gasket Kit**
   This kit provides the proper gasketing of units when applied in either a downflow or horizontal application.
   REQUIRED USE: Fan coils in either downflow or horizontal applications.
5. **Horizontal Applications - Water Management Kit**
   This kit provides proper installation of fan coils under conditions of high static pressure and high relative humidity.
   SUGGESTED USE: All fan coils.
6. **Single Point Wiring Kit**
   The single point wiring kit acts as a jumper between L1 and L3 lugs, and between the L2 and L4 lugs. This allows the installer to run two heavy-gauge, high-voltage wires into the fan coil rather than 4 light-gauge, high-voltage wires.
   SUGGESTED USE: Fan coils with 15- and 20-kW fused heaters only.
7. **Filter Kit (12 pack)**
   The kit consists of 12 fan coil framed filters. These filters collect large dust particles from the return air entering the fan coil and prevents them from collecting on the coil. This process helps to keep the coil clean, which increases heat transfer and, in turn, the efficiency of the system.
   SUGGESTED USE: To replace filters in fan coils.
   REQUIRED USE: All units unless a filter grille is used.
8. **Fan Coil Filter Cabinet**
   This cabinet is mounted to the fan coil on the return air end and designed to slip over the outer fan coil casing. The cabinets are insulated using the same insulation as production fan coils. They are designed for the removal of particulates from indoor air using FILXXFNC00(14, 17, 21, 24) media filter cartridges. These fan coil media filter cartridge kits are designed for the removal of particles from indoor air. The cartridge is installed in the return air duct next to the air handler or further upstream.
   SUGGESTED USE: All fan coils.
9. **Condensate Drain Trap Kit**
   This kit consists of 50 PVC condensate traps. Each trap is pre-formed and ready for field installation. This deep trap helps the system make and hold proper condensate flow even during blower initiation.
   SUGGESTED USE: All fan coils.
10. **Air Cleaner 240-volt Conversion Kit**
    The AIRA electronic air cleaner comes ready for 115-v operation.
    REQUIRED USE: This kit is required when running 240-volt circuit to air cleaner.

Copyright 2010 Carrier Corp. • 7310 W. Morris St. • Indianapolis, IN 46231 Printed in U.S.A. Edition Date: 09/10

Catalog No: FX4D-01PD

Manufacturer reserves the right to change, at any time, specifications and designs without notice and without obligations.

Replaces: NEW

Downloaded from www.Manualslib.com manuals search engine