FASTENING SCHEDULE

1. JOIST TO SILL OR GIRDER, TOENAIL 3-8d
2. BRIDGING TO JOIST, TOENAIL EA END 2-8d
3. SOLE PLATE TO JOIST OR BLK'G TYP FACE NAIL 16d @ 16" OC
4. SOLE PLATE TO JOIST OR BLK'G @ BRACED WALL PANELS 3-16d PER 16
5. TOP PLATE TO STUD END NAIL 2-16d
6. STUD TO SOLE PLATE 2-16d END NAIL OR 4-8d TOE NAIL
7. DOUBLE STUDS FACE NAIL 16d @ 24" OC
8. DOUBLE TOP PLATE TYP FACE NAIL 16d @ 16"OC
9. DOUBLE TOP PLATE LAP SPLICES 8-16d
10. BLOCKING AT JOISTS/RAFTERS TOE NAIL 3-8d
11. TOP PLATES LAP AND INTERSECTIONS 2-16d FACE NAIL
12. CEILING JOISTS TO TOP PLATE TOE NAIL 3-8d
13. CONTINUOUS HEADER TO STUD TOENAIL 4-8d
14. CEILING JOISTS LAP OVER PARTITIONS FACE NAIL 3-16d
15. CEILING JOISTS TO PARALLEL RAFTERS FACE NAIL 3-16d

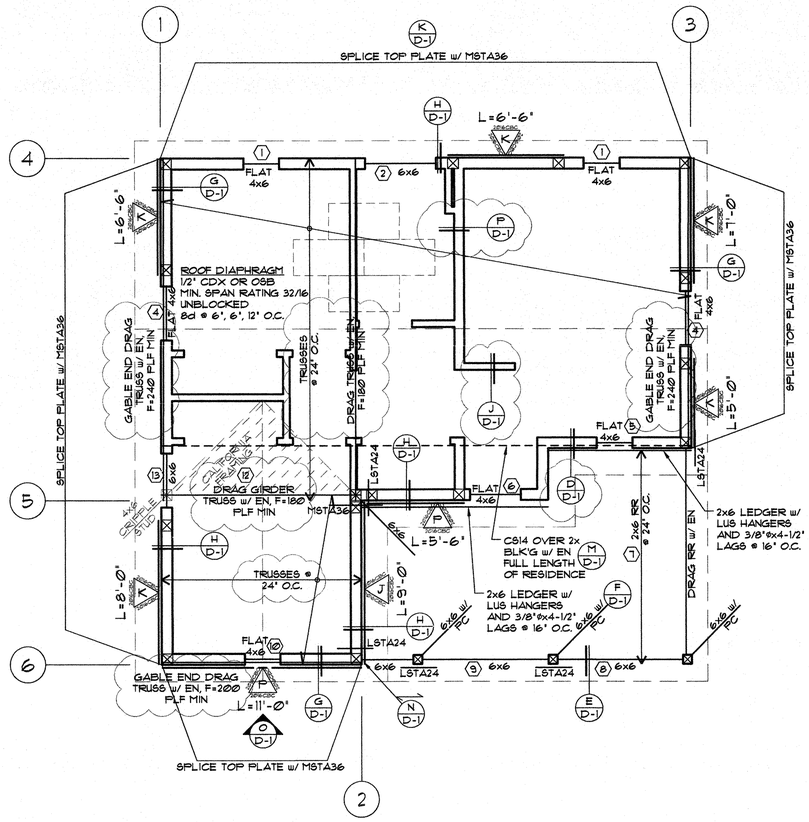

FRAMING PLAN

SCALE: 1/4"=1'-0"

NOTES

FRAMING NOTES:

1. ALL 2X JOISTS/BEAMS/LUMBER TO BE D.F. LARCH #2 OR BETTER, UNO, COMPLY WITH DOC PS20 AND BE GRADE MARKED.
2. ALL 4X AND LARGER BEAMS/HEADERS TO BE D.F. LARCH #1 OR BETTER, UNO, COMPLY WITH DOC PS20 AND BE GRADE MARKED.
3. WHERE TRUSSES ARE USED, TRUSSES SHALL NOT BEAR ON INTERIOR WALL UNLESS INDICATED OTHERWISE.
4. ALL HARDWARE SHALL BE OF APPROVED TYPE.
5. FASCIA SHALL BE D.F. OR SPRUCE, UNO.
6. EAVES SHALL HAVE SHIP LAP, UNO.
7. ALL ROOF OPENINGS SHALL HAVE FLASHING.
8. ALL EXTERIOR WALLS SHALL BE 2X4 STUDS @ 16" O.C., UNO. ALL PLUMBING WALLS SHALL BE 2X6 STUDS @ 16" O.C. ANY WALL ABOVE 10'-0" IN HEIGHT SHALL BE 2X6 STUDS @ 16" O.C., UNO. ALL INTERIOR WALLS SHALL BE 2X4 STUDS @ 16" O.C.
9. ALL EXPOSED PLYWOOD SHALL BE CCX.
10. TWO LAYERS OF GRADE 'D' PAPER SHALL BE APPLIED OVER ALL WOOD BASE SHEATHING.
11. WHERE TOP OR SOLE PLATES ARE CUT FOR PIPES, A METAL TIE OF MINIMUM 0.058" THICK AND 1-1/2" WIDE SHALL BE FASTENED ACROSS THE OPENING WITH 6-16D NAILS MINIMUM EACH SIDE.
12. FASTENERS FOR SOLE PLATE NAILING, AND WOOD STRUCTURAL PANEL SHEATHING ON SHEAR WALLS AND DIAPHRAGMS SHALL BE COMMON NAILS WITH FULL HEADS OR GALVANIZED BOX (HOT-DIPPED OR TUMBLED), UNO.
13. HOLDOWN CONNECTOR BOLTS IN WOOD FRAMING REQUIRE APPROVED PLATE WASHERS AND HOLDOWNS SHALL BE TIGHTENED JUST PRIOR TO COVERING THE WALL FRAMING.
14. JOISTS UNDER AND PARALLEL TO BEARING WALLS SHALL BE DOUBLED.
15. WHERE TJI FLOOR JOISTS ARE USED, DRAG JOISTS, BLOCKING, AND RIM JOISTS SHALL BE 1-3/4" X FJ DEPTH TIMBERSTRAND, UNO.
16. SHEAR WALLS MAY BE ON EITHER SIDE OF WALL WHERE SHOWN.
17. PROVIDE FULL BEARING STUDS AT ALL GIRDER TRUSS BEARING POINTS.
18. FASTENERS IN PRESERVATIVE-TREATED WOOD SHALL BE OF HOT DIPPED ZINC-COATED GALVANIZED STEEL, STAINLESS STEEL, SILICON BRONZE OR COPPER. COATING TYPES AND WEIGHTS FOR CONNECTORS IN CONTACT WITH PRESERVATIVE-TREATED WOOD SHALL BE IN ACCORDANCE WITH THE CONNECTOR MANUFACTURER'S RECOMMENDATIONS. IN THE ABSENCE OF MANUFACTURER'S RECOMMENDATIONS, A MINIMUM OF ASTM A653 TYPE G185 ZINC-COATED GALVANIZED STEEL, OR EQUIVALENT, SHALL BE USED.
19. WHEN TRUSSES ARE USED, TRUSS LAYOUT AND CALCULATIONS SHALL BE APPROVED BY ENGINEER AND BUILDING OFFICIAL PRIOR TO FABRICATION. TRUSS PITCH TO BE FIELD VERIFIED BY CONTRACTOR PRIOR TO ORDERING TRUSSES.
20. PLYWOOD SHALL COMPLY W/ DOC PS1-09 OR DOC PS2-10. SEE PLAN FOR THICKNESS/ TYP. ALL PANELS TO BE GRADE MARKED.
21. STEEL TUBE TO BE 46 KSI W SECTIONS A992 GRADE 50 STEEL TO BE PROVIDED BY LICENSED FABRICATOR. WELDING TO BE PREFORMED BY CERTIFIED WELDER W/ CONTINUOUS DEPUTY INSPECTION.
22. GLU-LAM BEAMS (GLB) SHALL BE GRADE 24F-V4 MIN, OR 24F-V8 FOR CANTILEVER BEAMS. PROVIDE BEAMS WITH NO CAMBER. INSPECTOR TO BE PROVIDED WITH APPROVED "CERTIFICATION OF INSPECTION" COMPLYING WITH ANSI/ AITC A 190.1. GLU-LAMS INSTALLED IN EXTERIOR ENVIRONMENTS TO BE "EXTERIOR GRADE."
23. MOISTURE CONTENT OF PRESERVATIVE-TREATED WOOD SHALL BE 19% OR LESS BEFORE BEING COVERED WITH INSULATION, INTERIOR WALL FINISH, AND FLOOR COVERING OF OTHER MATERIALS.
24. FIELD CUT ENDS, NOTCHES AND DRILLED HOLES IN PRESERVATIVE-TREATED WOOD SHALL BE TREATED IN THE FIELD IN ACCORDANCE WITH AWPA M4.
25. ALL PRESSURE-PRESERVATIVE-TREATED LUMBER OR PLYWOOD SHALL BE MARKED WITH THE REQUIRED INFORMATION PER SECTION R317.2.1:
    - 25.1. IDENTIFICATION OF THE TREATING PLANT.
    - 25.2. TYPE OF PRESERVATIVE.
    - 25.3. THE MINIMUM PRESERVATIVE RETENTION.
    - 25.4. END USE FOR WHICH THE PRODUCT WAS TREATED.
    - 25.5. IDENTITY OF THE APPROVED INSPECTION AGENCY.
    - 25.6. THE DESIGNATION "DRY", IF APPLICABLE.

    *EXCEPTION: QUALITY MARKS ON LUMBER LESS THAN 1 INCH (25 MM) NOMINAL THICKNESS, OR LUMBER LESS THAN NOMINAL 1 INCH BY 5 INCHES (25 MM BY 127 MM) OR 2 INCHES BY 4 INCHES (51 MM BY 102 MM) OR LUMBER 36 INCHES (914 MM) OR LESS IN LENGTH SHALL BE APPLIED BY STAMPING THE FACES OF EXTERIOR PIECES OR BY END LABELING NOT LESS THAN 25% OF THE PIECES OF A BUNDLES UNIT.

LEGEND	
(•)	DENOTES BEAM NUMBER IN STRUCTURAL CALC'S
L= ▽	DENOTES PANEL TYPE & LENGTH (SEE SHEAR PANEL SCHEDULE FOR PANEL DEFINITIONS)
PSL	PARALLAM (BY TRUS JOIST), OR APPROVED EQUAL, E=2.0E, Fb=2,900 PSI, Fv= 290 PSI (ESR-1387)
LVL	MICROLLAM (BY TRUS JOIST), OR APPROVED EQUAL, E= 1.9E, Fb= 2,600 PSI, Fv= 285 PSI (ESR-1387)
GLB	GLU-LAM BEAM, 24F-V4 TYP., 24F-V8 FOR CANTILEVERS.
TJI	MANUFACTURED I-JOIST (BY TRUS JOIST, ESR-1153), OR APPROVED EQUAL
RR	ROOF RAFTER
CJ	CEILING JOIST
FJ	FLOOR JOIST
EN	END NAILING
DF	DOUGLAS-FIR
DF #1	DOUGLAS-FIR #1
DF #2	DOUGLAS-FIR #2
DFSS	DOUGLAS-FIR SELECT STRUCTURAL

REV	DATE	DESCRIPTION
2	09/14/18	Client Revisions (change to trusses)
1	08/23/18	Plan Check Revisions
0	07/17/18	1st SUBMITTAL

EW-Webb Engineering Inc.
1299 Columbia Ave. Ste. E-7
Riverside CA 92507
(951) 788-2050 - fax (951) 788-2075
ew-webb.com

©2018 EW-Webb Engineering Inc. Use of all or portions of this document by other than the named "client" and/or for other than the execution of only one "project" is without the permission of the engineer and is at the risk & liability of such user.

Sheet Title: FRAMING PLAN

Project/Client/Job Address:
Residence
for
The Grove Community Church
19900 Grove Community Dr.
Riverside, CA 92508

REGISTERED PROFESSIONAL ENGINEER
EARL WARREN WEBB
No. 47387
CIVIL
STATE OF CALIFORNIA
SEP 14 2018

SHEET NO. 0

S-2

HOLDOWN SCHEDULE

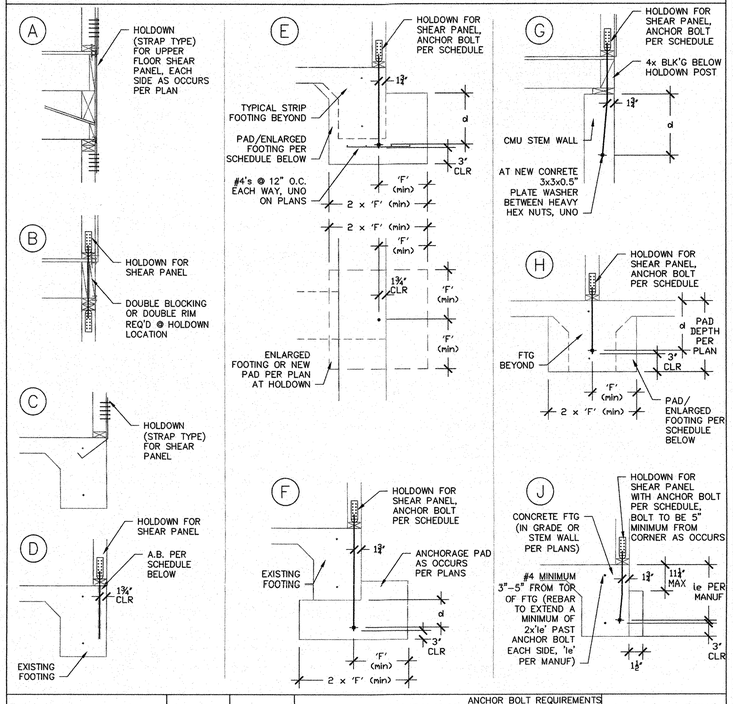

HOLDOWN DESIGNATION MODEL NO.[7]	MIN. END STUD[7]	CODE LISTING	CAPACITY[18]	ANCHOR BOLT REQUIREMENTS: NEW CONCRETE FOOTING[4,10,15,16,19,20]	NEW OR EXISTING CMU[15,16,17]	EXISTING CONCRETE[9,15,16]
MSTC28	4x4	ESR-2105/ RR-25713	1155			
MSTC40	4x4	ESR-2105/ RR-25713	2695			
MSTC52	4x4	ESR-2105/ RR-25713	4235			
MSTC66	4x4	ESR-2105/ RR-25713	5860			
MSTC78	4x4	ESR-2105/ RR-25713	5860			
LFTA	4x4	ESR-2613/ RR-25718	1205			
FTA2	2x4	ESR-2613/ RR-25718	1890			
FTA2	3x4	ESR-2613/ RR-25718	3120			
FTA2	4x4	ESR-2613/ RR-25718	3385			
FTA5	4x4	ESR-2613/ RR-25718	4400			
FTA7	3x4	ESR-2613/ RR-25718	6210			
FTA7	4x4	ESR-2613/ RR-25718	7600			
HPAHD22	2x4	ER-1211/ RR-xxxxx	2210			
HPAHD22	4x4[11]	ER-1211/ RR-xxxxx	4875			
HDU2	4x4	ESR-2330/ RR-25720	3075	SIMPSON SSTB24 (le=20-5/8"),[10] or PAB5 w/ PAD (d=8", F=11")	5/8"ø THREADED ROD 3/4"ø HOLE, d=8"	5/8"ø THREADED ROD 3/4"ø HOLE, d=10"
HDU4	4x4	ESR-2330/ RR-25720	4565	SIMPSON SB5/8x24 (le=18"),[10] or PAB5 w/ PAD (d=8", F=11")	5/8"ø THREADED ROD 3/4"ø HOLE, d=10"	
HDU5	4x4	ESR-2330/ RR-25720	5645	SIMPSON SB5/8x24 (le=18"),[10] or PAB5 w/ PAD (d=8", F=11")	5/8"ø THREADED ROD 3/4"ø HOLE, d=10"	
HDU8	4x4	ESR-2330/ RR-25720	6970	SIMPSON SB7/8x24 (le=18"),[10] or PAB7 w/ PAD (d=11", F=18")	7/8"ø THREADED ROD 1"ø HOLE, d=14"	
HDU8	6x4	ESR-2330/ RR-25720	7855	SIMPSON SB7/8x24 (le=18"),[10] or PAB7 w/ PAD (d=11", F=18")	7/8"ø THREADED ROD 1"ø HOLE, d=16"	
HDU11	6x4	ESR-2330/ RR-25720	9535	PAB8 d=12", F=18"[10]	1"ø THREADED ROD 1-1/8"ø HOLE, d=20"	
HDU11	8x4	ESR-2330/ RR-25720	11175	PAB8 d=12", F=18"[10]	1"ø THREADED ROD 1-1/8"ø HOLE, d=22"	
HDU14[1,3]	8x4 or 6x6	ESR-2330/ RR-25720	14390	PAB8 d=12", F=18"[10]	1"ø THREADED ROD 1-1/8"ø HOLE, d=28"	
HD12[5,6,7]	8x4 or 6x6	ESR-xxxx/ RR-25528	15510	PAB9 d=14", F=21"[10]	1-1/8"ø THREADED ROD 1-1/4"ø HOLE, d=30"	
HD19[5,6,7,8]	8x4 or 6x6	ESR-xxxx/ RR-25528	16735	PAB9 d=14", F=21"[10]	1-1/8"ø THREADED ROD 1-1/4"ø HOLE, d=32"	
HD19[5,6,7,8]	8x4 or 6x6	ESR-xxxx/ RR-25528	19070	PAB10 d=16", F=24"[10]	1-1/4"ø THREADED ROD 1-3/8"ø HOLE, d=38"	

NOTES

1. END STUD SIZES LISTED '*WIDTH x DEPTH*' FORMAT. SEE BELOW FOR EXAMPLE:

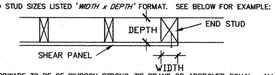

2. HARDWARE TO BE OF SIMPSON STRONG-TIE BRAND OR APPROVED EQUAL. ALL HARDWARE TO USE FULL QUANTITY OF FASTENERS PER MANUFACTURER.
3. USE "SSTB1" MODELS WHERE A 2-2x OR 3x SILL PLATE IS INSTALLED.
4. AT TWO POUR FOUNDATIONS, ALL EMBEDMENT DEPTHS SHALL BE MEASURED FROM COLD JOINT DOWNWARD.
5. BOLT HOLES SHALL BE A MINIMUM OF 1/32" TO A MAXIMUM OF 1/16" LARGER THAN THE SPECIFIED BOLT DIAMETER.
6. SIMPSON "BP" (RR-25293) BEARING PLATES ARE REQUIRED IN ALL APPLICATIONS WHERE THE LABC APPLIES.
7. STUD BOLTS SHALL BE SNUGLY TIGHTENED w/ STANDARD CUT WASHERS BETWEEN THE WOOD AND THE NUT. WASHERS MUST BE REPLACED w/ SIMPSON BP's IN ALL APPLICATIONS WHERE THE LABC APPLIES.
8. STANDARD CUT WASHER IS REQUIRED UNDER ANCHOR NUT.
9. AT EXISTING CONCRETE, YOU MAY INSTALL THE SIZE THREADED ROD SHOWN IN TABLE ABOVE INTO A HOLE THAT IS 1/8" LARGER THAN THE THREADED ROD AT THE EMBEDMENT DEPTH ('d') SHOWN IN THE TABLE ABOVE. FILL HOLE WITH SIMPSON "SET-XP" EPOXY (ESR-2508/RR-25744) SHALL BE USED. SPECIAL INSPECTION IS REQUIRED.
10. SIMPSON "PAB" PRE-ASSEMBLED ANCHOR BOLTS MAY BE SUBSTITUTED w/ ALL-THREAD OF SAME DIAMETER (58ksi TYP, 120ksf for 1"ø, 125ksi for 1-1/8"ø and 1-1/4"ø) w/ 3x3x1/2 PLATE WASHER BETWEEN HEX NUTS AT SPECIFIED EMBEDMENT DEPTH.
11. 8" MINIMUM END DISTANCE TO CONCRETE CORNER REQUIRED.
12. HOLDOWN HARDWARE MUST BE SECURED IN PLACE PRIOR TO FOUNDATION INSPECTION AND HOLDOWNS SHALL BE RE-TIGHTENED JUST PRIOR TO COVERING WALL FRAMING.
13. REQUIRES HEAVY HEX ANCHOR NUT (SUPPLIED BY MANUFACTURER w/ HOLDOWN).
14. INSTALL SUCH THAT THE BOTTOM STUD BOLT IS A MINIMUM OF 7" FROM THE END OF THE HOLDOWN STUD.
15. ANCHOR BOLT NUT SHOULD BE FINGER-TIGHT PLUS 1/3 TO 1/2 TURN WITH A HAND WRENCH. CARE SHOULD BE TAKEN TO NOT OVER-TORQUE THE NUT. IMPACT WRENCHES SHOULD NOT BE USED.
16. THREADED RODS SHALL BE ASTM 307 OR A36 STEEL.
17. AT EXISTING CMU, YOU MAY INSTALL THE SIZE THREADED ROD SHOWN IN THE TABLE ABOVE INTO A HOLE THAT IS 1/8" LARGER THAN THE THREADED ROD AT THE EMBEDMENT DEPTH ('d') SHOWN IN THE TABLE ABOVE. FILL HOLE WITH SIMPSON "SET" EPOXY (ESR-1772/RR-25279). SPECIAL INSPECTION IS REQUIRED.
18. WHERE LABC APPLIES, ALLOWABLE CAPACITIES REDUCED TO 75% OF MANUFACTURER'S VALUE.
19. FOR "SSTB" AND "SB" BOLTS (ESR-2611), BOLT SHALL BE INSTALLED A MINIMUM OF 5" FROM CORNERS AND/OR END OF FOOTING. ONE #4 BAR MINIMUM SHALL BE INSTALLED 3"-5" FROM TOP OF FOOTING AND EXTEND PAST BOLT 36" MINIMUM EACH DIRECTION.
20. FOOTINGS SHALL BE DEEPENED AS REQUIRED AT HOLDOWN BOLTS TO ALLOW FOR 3" MINIMUM CLEARANCE BETWEEN BOTTOM OF HOLDOWN BOLT AND GRADE. SEE BELOW FOR EXAMPLE:

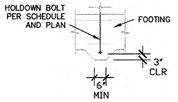

SHEAR PANEL SCHEDULE

SHEAR PANEL TYPE

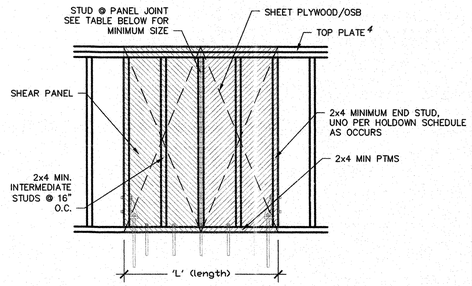

SILL REQUIREMENTS

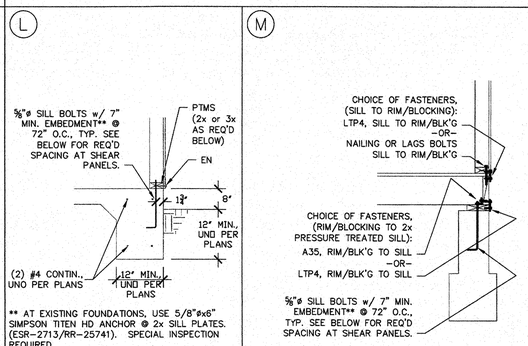

** AT EXISTING FOUNDATIONS, USE 5/8"øx6" SIMPSON TITEN HD ANCHOR @ 2x SILL PLATES. (ESR-2713/RR-25741). SPECIAL INSPECTION REQUIRED.

THERE SHALL BE A MINIMUM OF TWO SILL BOLTS PER PIECE OF SILL PLATE WITH ONE BOLT LOCATED NOT MORE THAN 12" OR LESS THAN SEVEN BOLT DIAMETERS FROM EACH END OF THE PIECE. PLATE WASHERS A MINIMUM OF 3x3x0.229" SHALL BE USED ON EACH BOLT. THE PLATE WASHER SHALL EXTEND TO WITHIN 1/2" OF THE EDGE OF THE BOTTOM PLATE ON THE SIDE WITH SHEATHING.

** AT EXISTING FOUNDATIONS, USE 5/8"øx6" SIMPSON TITEN HD ANCHOR @ 2x SILL PLATES. (ESR-1056/RR-25560). SPECIAL INSPECTION REQUIRED.

THERE SHALL BE A MINIMUM OF TWO SILL BOLTS PER PIECE OF SILL PLATE WITH ONE BOLT LOCATED NOT MORE THAN 12" OR LESS THAN SEVEN BOLT DIAMETERS FROM EACH END OF THE PIECE. PLATE WASHERS A MINIMUM OF 3x3x0.229" SHALL BE USED ON EACH BOLT. THE PLATE WASHER SHALL EXTEND TO WITHIN 1/2" OF THE EDGE OF THE BOTTOM PLATE ON THE SIDE WITH SHEATHING.

SHEAR TRANSFER

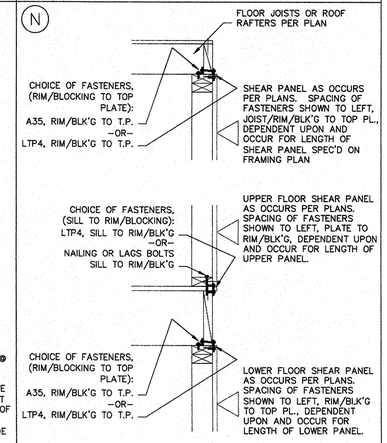

TYPE	PANEL CAPACITY[6] CBC PLF	85% OF CBC PLF[15]	LABC PLF	MATERIAL[1,3]	BLOCKING	NAILING[2,5,8]	MIN. STUD SIZE FOR STUDS @ PANEL JOINTS[14]	SILL BOLT SPACING[1,3,16] (BOLTS WITH 2x SILL)	SILL TO RIM/BLK'G SPACING[13] 2x MAX SILL 16d	LTP4	SDS 1/4"[17]	RIM/BLK'G TO SILL SPACING[13] A35	LTP4	SILL TO RIM/BLK'G SPACING[13] 2x MAX SILL 16d	LTP4	SDS 1/4"[17]	RIM/BLK'G TO TOP PLATE[13] A35	LTP4
J[9]	160 PLF	136 PLF	160 PLF	3/8" PLYWOOD OR OSB	REQ'D	8d AT 6" O.C.	2x4	5/8"ø A.B. @ 48" O.C.	9" O.C.	48" O.C.	16" O.C.	33" O.C.	48" O.C.	9" O.C.	48" O.C.	16" O.C.	33" O.C.	48" O.C.
K[9]	240 PLF	204 PLF	200 PLF	3/8" PLYWOOD OR OSB	REQ'D	8d AT 4" O.C.	2x4	5/8"ø A.B. @ 48" O.C.	6" O.C.	33" O.C.	16" O.C.	22" O.C.	33" O.C.	6" O.C.	33" O.C.	16" O.C.	22" O.C.	33" O.C.
L[9]	310 PLF	263 PLF	–	3/8" PLYWOOD OR OSB	REQ'D	8d AT 3" O.C.	2x4	5/8"ø A.B. @ 46" O.C.	4" O.C.	24" O.C.	16" O.C.	16" O.C.	24" O.C.	4" O.C.	24" O.C.	16" O.C.	16" O.C.	24" O.C.
M[9]	410 PLF	348 PLF	–	3/8" PLYWOOD OR OSB	REQ'D	8d AT 2" O.C.	3x4	5/8"ø A.B. @ 36" O.C.	–	18" O.C.	16" O.C.	12" O.C.	18" O.C.	–	18" O.C.	16" O.C.	12" O.C.	18" O.C.
N[9]	340 PLF	289 PLF	340 PLF	1/2" STRUCT I. PLYWOOD OR OSB	REQ'D	10d AT 6" O.C.	2x4	5/8"ø A.B. @ 43" O.C.	–	23" O.C.	18" O.C.	15" O.C.	23" O.C.	–	23" O.C.	18" O.C.	15" O.C.	23" O.C.
O[9]	510 PLF	433 PLF	510 PLF	1/2" STRUCT I. PLYWOOD OR OSB	REQ'D	10d AT 4" O.C.	3x4	5/8"ø A.B. @ 29" O.C.	–	15" O.C.	12" O.C.	10" O.C.	15" O.C.	–	15" O.C.	12" O.C.	10" O.C.	15" O.C.
P[9]	665 PLF	565 PLF	665 PLF	1/2" STRUCT I. PLYWOOD OR OSB	REQ'D	10d AT 3" O.C.	3x4	5/8"ø A.B. @ 22" O.C.	–	12" O.C.	10" O.C.	8" O.C.	12" O.C.	–	12" O.C.	10" O.C.	8" O.C.	12" O.C.
Q[9]	870 PLF	739 PLF	870 PLF	1/2" STRUCT I. PLYWOOD OR OSB	REQ'D	10d AT 2" O.C.	3x4	5/8"ø A.B. @ 16" O.C.	–	9" O.C.	7" O.C.	6" O.C.	9" O.C.	–	9" O.C.	7" O.C.	6" O.C.	9" O.C.
O O[7,11]	1020 PLF	867 PLF	1020 PLF	1/2" STRUCT I. PLYWOOD OR OSB[11]	REQ'D	10d AT 4" O.C.	3x4	5/8"ø A.B. @ 14" O.C.	–	15" O.C.[12]	6" O.C.	10" O.C.[12]	15" O.C.[12]	–	15" O.C.[12]	6" O.C.	10" O.C.[12]	15" O.C.[12]
P P[7,11]	1330 PLF	1130 PLF	1330 PLF	1/2" STRUCT I. PLYWOOD OR OSB[11]	REQ'D	10d AT 3" O.C.	3x4	5/8"ø A.B. @ 11" O.C.	–	12" O.C.[12]	5" O.C.	8" O.C.[12]	12" O.C.[12]	–	12" O.C.[12]	5" O.C.	8" O.C.[12]	12" O.C.[12]
Q Q[7,11]	1740 PLF	1470 PLF	1740 PLF	1/2" STRUCT I. PLYWOOD OR OSB[11]	REQ'D	10d AT 2" O.C.	3x4	5/8"ø A.B. @ 8" O.C.	–	9" O.C.[12]	3-1/2" O.C.	6" O.C.[12]	9" O.C.[12]	–	9" O.C.[12]	3-1/2" O.C.	6" O.C.[12]	9" O.C.[12]

NOTES

1. PLYWOOD/OSB MAY BE SUBSTITUTED w/ SIDING. THICKNESS SPECIFIED IS MEASURED AT POINT OF FASTENING ON PANEL EDGES.
2. NAILING SPECIFIED FOR PANEL APPLIES TO ALL EDGES OF MATERIAL, IE, AT TOP AND BOTTOM PLATES, STUDS, AND BLOCKING (REQUIRED UNLESS SO NOTED). ALL OSB AND PLYWOOD SHALL ALSO BE NAILED AT INTERMEDIATE STUDS AT 12" MAX. O.C. USING SAME NAIL SIZE AS SPECIFIED FOR EDGES.
3. PLYWOOD SHALL BE C-D, C-C MINIMUM, UNLESS NOTED OTHERWISE ABOVE. ALL WOOD PANELS SHALL COMPLY W/ PS1-95 AND/OR PS1-92.
4. 2x TOP PLATES SHALL BE NAILED TOGETHER w/ 16d AT 4" O.C. FOR FULL LENGTH OF SHEAR PANEL.
5. ALL SILL PLATE, SHEAR PANEL, AND DIAPHRAGM NAILING SHALL UTILIZE COMMON NAILS w/ FULL HEADS OR GALVANIZED BOX NAILS (HOT-DIPPED OR TUMBLED ONLY).
6. LOADS DERIVED FROM CBC AND LABC TABLES.
7. WHERE PLYWOOD IS APPLIED TO BOTH SIDES OF A SHEAR WALL AND NAIL SPACING IS LESS THAN 6" O.C., PLYWOOD PANEL JOINTS SHALL BE OFFSET TO FALL ON DIFFERENT FRAMING MEMBERS OR FRAMING SHALL BE 3" OR THICKER AT ADJOINING PANEL EDGES AND NAILS AT ALL PANEL EDGES SHALL BE STAGGERED.
8. SHEAR PANELS REQUIRE 3/8" EDGE DISTANCE FOR PLYWOOD BOUNDARY NAILING. NAILS SHALL BE PLACED A MINIMUM OF 3/8" FROM THE PANEL EDGES AND MINIMUM 3/8" FROM THE EDGE OF THE CONNECTING MEMBERS.
9. SINGLE SIDED SHEAR PANELS MAY BE PLACED ON EITHER SIDE OF WALL, REGARDLESS OF HOW SHOWN ON PLAN.
10. NOT USED.
11. AT DOUBLE SIDED SHEAR PANELS, SHEATHING TO BE APPLIED TO BOTH SIDES OF WALL.
12. SPACING APPLIES TO EACH PANEL, ON EACH SIDE OF WALL.
13. SILL FASTENER SPACING AND TYPE APPLIES FOR ENTIRE LENGTH OF SHEAR PANEL.
14. WHERE SHEAR DESIGN VALUE EXCEEDS 350 POUNDS PER LINEAR FOOT, ALL FRAMING MEMBERS RECEIVING EDGE NAILING FROM ABUTTING PANELS SHALL NOT BE LESS THAN A SINGLE 3x MEMBER, OR TWO 2x MEMBERS FASTENED TOGETHER WITH 16d @ 4" O.C. FOR FULL LENGTH OF SHEAR PANEL.
15. 85% OF CBC LISTED VALUES FOR PLYWOOD SHEARWALLS PER JURISDICTION AS REQUIRED.
16. ANCHOR BOLTS SHALL BE A-307 AND HAVE STEEL PLATE WASHERS A MINIMUM OF 3"x3"x0.229" BETWEEN THE SILL PLATE AND THE NUT. THE PLATE WASHER SHALL EXTEND TO WITHIN 1/2" OF THE EDGE OF THE BOTTOM PLATE ON THE SIDE(S) WITH SHEATHING. WHERE SHEATHING IS ON BOTH SIDES OF THE WALL, THE PLATES MAY BE STAGGERED.

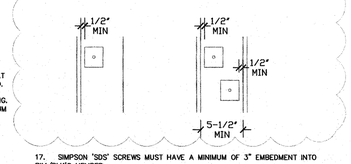

17. SIMPSON "SDS" SCREWS MUST HAVE A MINIMUM OF 3" EMBEDMENT INTO RIM/BLK'G MEMBER.

REV	DATE	DESCRIPTION
1	08/23/18	Plan Check Corrections
0	07/17/18	1st SUBMITTAL

EW-Webb Engineering Inc.
1299 Columbia Ave. Ste. E-7
Riverside CA 92507
(951) 788-2050 - fax (951) 788-2075
ew-webb.com

©2018 EW-Webb Engineering Inc. Use of all or portions of this document by other than the named "client" and/or for other than the execution of only one "project" is without the permission of the engineer and is at the risk & liability of such user.

Sheet Title: SHEAR SCHEDULE & HOLDOWN SCHEDULE

Project/Client/Job Address: Residence for The Grove Community Church, 19900 Grove Community Dr., Riverside, CA 92508

REGISTERED PROFESSIONAL ENGINEER EARL WARREN WEBB No. C-37584 CIVIL STATE OF CALIFORNIA AUG 23 2018

SHEET NO. 0

D-0

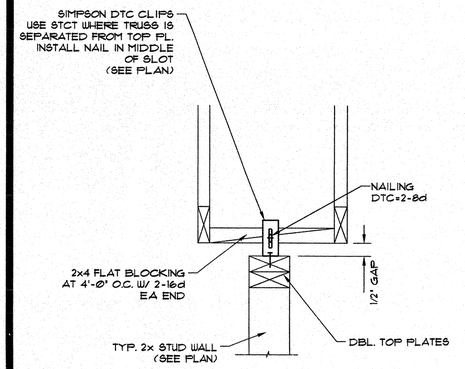

TRUSS PARALLEL

D0127 TRUSS CONNECTION (P)

SCALE: N.T.S.

STRAP	GA	STRAP LAP SPLICE MIN FASTENERS PER SPLICE	MIN SPLICE LENGTH (LAP)
CMST12	12	25-16d	22"
		30-10d	27"
CMST14	14	18-16d	16"
		21-10d	19"
CMSTC16	16	13-16d	11"
		15-10d	12"

TABLE ABOVE TAKEN FROM SIMPSON TECHNICAL BULLETIN 'T-CMST08'

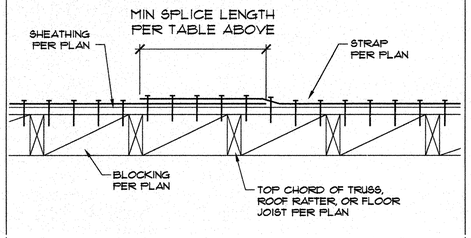

D0605 COIL STRAP LAP (M)

SCALE: NONE

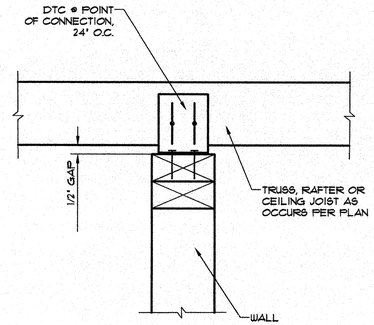

D0102 TRUSS TO WALL (J)

SCALE: NONE

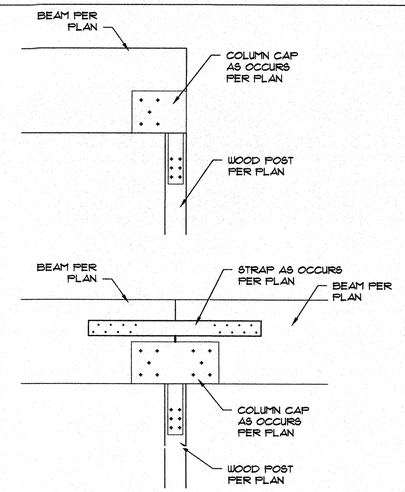

D0193 POST TO BEAM (F)

SCALE: NONE

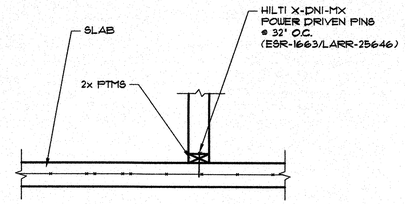

D0139 INT NON-BEARING (C)

SCALE: NONE

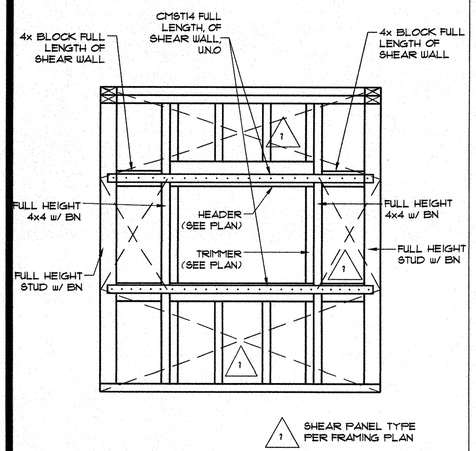

D0171 SHEAR TRANSFER (O)

SCALE: N.T.S.

D0084 SHEAR TRANSFER (H)

SCALE: NONE

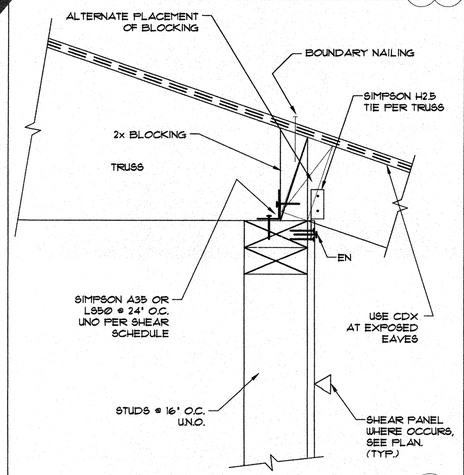

D0604 BEARING (E)

NONE

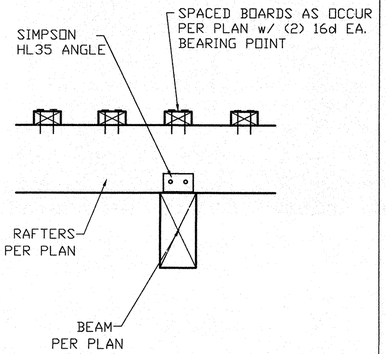

D0340 PAD FOOTING (B)

SCALE: NONE

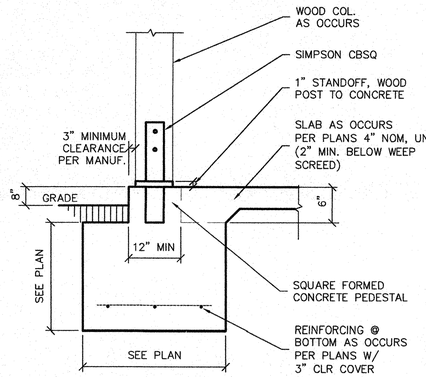

D0046 BEAM CONNECTION (N)

SCALE: NONE

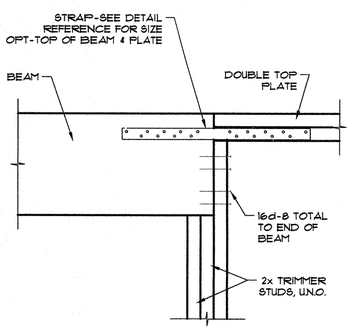

D0209 TOP PLATE SPLICE (K)

SCALE: NONE

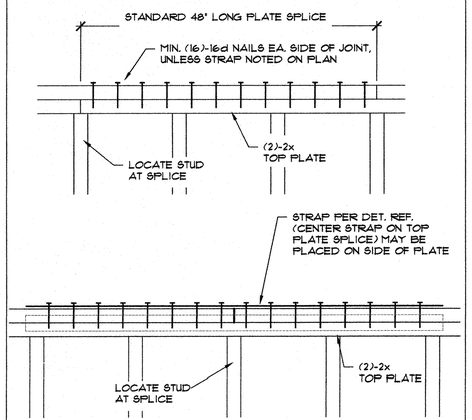

D0068 SHEAR TRANSFER (G)

SCALE: NONE

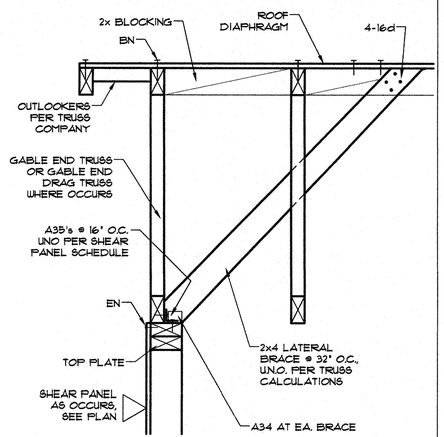

D0560 SHEAR TRANSFER (D)

SCALE: NONE

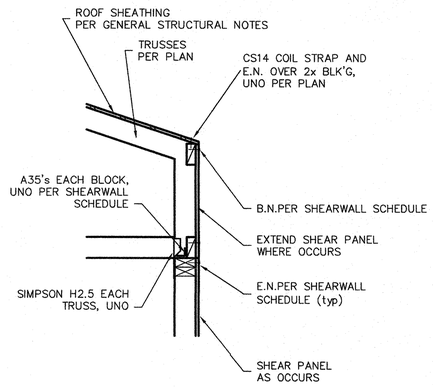

D0025 STRIP FOOTING (A)

SCALE: NONE

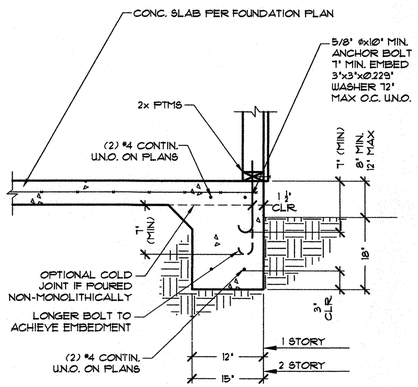

REV	DATE	DESCRIPTION
3	09/14/18	Client Revisions (change to trusses)
2	08/23/18	Plan Check Revisions
1	07/17/18	1st SUBMITTAL
0		

EW-Webb Engineering Inc.
1299 Columbia Ave. Ste. E-7
Riverside CA 92507
(951) 788-2050 - fax (951) 788-2075
ew-webb.com

©2018 EW-Webb Engineering Inc. Use of all or portions of this document by other than the named "client" and/or for other than the specific purpose of this project is without the permission of the "engineer" and is at the risk & liability of such user.

Sheet Title: DETAILS

Project/Client/Job Address: Residence for The Grove Community Church, 19900 Grove Community Dr., Riverside, CA 92508

REGISTERED PROFESSIONAL ENGINEER EARL WARREN WEBB No. C 37984 CIVIL STATE OF CALIFORNIA
SEP 14 2018

SHEET NO. 0

D-1