APPENDIX A:
TRAVEL DEMAND MODEL REPORT

CRYSTAL VIEW TERRACE/GREEN ORCHARD PLACE/OVERLOOK PARKWAY PROJECT TRAFFIC ANALYSIS MODEL

Model Assumptions and Validation

Submitted by:

March 22, 2012

[J11-1602]

TABLE OF CONTENTS

Table of Contents **2**

1.0 Introduction **3**

1.1 HIGHWAY AND TRANSIT NETWORK DEVELOPMENT 3
1.2 TRIP GENERATION 4
1.3 TRIP DISTRIBUTION, MODE SPLIT AND TRIP ASSIGNMENT 4

2.0 Traffic Assignment Validation **4**

2.1 COMPARISON OF OBSERVED VERSUS ESTIMATED VOLUMES BY SCREENLINE (SCREENLINE ANALYSIS) 5
2.2 ROOT MEAN SQUARE ERROR (RMSE) 10
2.3 COMPARISON OF OBSERVED VERSUS ESTIMATED VOLUMES FOR ALL LINKS WITH COUNTS 10
2.4 COEFFICIENT OF DETERMINATION (R2) 12

3.0 Conclusions **12**

1.0 INTRODUCTION

This report documents the development of the Crystal View Terrace/Green Orchard Place/Overlook Parkway (Overlook Parkway) Project Traffic Analysis Model (Model) based on Year 2008 Riverside Traffic Analysis Model (RivTAM) in TransCAD platform. The purpose for developing a focused and detailed model for the City is for use in Overlook Parkway project analyses. The Overlook Parkway model covers all of the six counties in the SCAG region. The model roadway network within the project area was detailed and expanded to include roadways classified as Collector and above.

The travel demand model used for the analysis is validated for the base year to determine its predictive ability to replicate observed (existing) traffic counts using the trip rates, speeds, roadway capacities, and other variables. If the model cannot produce traffic volumes similar to what is observed in the base year, then appropriate adjustments are made until the model is able to reasonably replicate current travel conditions in the area. A model that replicates existing conditions accurately is then assumed to be well able to assess future conditions.

The structure of the Overlook Parkway model is consistent with the RivTAM model to ensure the compatibility between the two models. Specifically, the model consists of traditional four step modeling process including trip generation, trip distribution, mode split, and traffic assignment. Two model scenarios were included in the Overlook Parkway model, namely the existing base year and the forecast year 2035, and several alternative runs were tested and performed.

The validation for base year model was followed to ensure the results match with the both RivTAM model and traffic counts.

1.1 HIGHWAY AND TRANSIT NETWORK DEVELOPMENT

Accurate transportation model calibration and validation requires that the transportation highway network represents the same time horizon as the land-use data that is used to estimate travel demand. The RivTAM 2008 Base Year model highway network was used to develop the Overlook Parkway model highway network. Generally, all the streets currently existing in the vicinity of the project were included in the model network. Some of the local residential streets were included in the network to measure the impact of the project.

Highway network attributes such as roadway speed, functional classification, facility type, lane capacity, and numbers of lanes were updated to reflect the existing conditions in the project area. No modifications or changes were made to the RivTAM highway network in the region outside the defined project area.

The existing RivTAM transit network was maintained as the original since there are no transit line changes proposed in the project's vicinity; therefore, no changes were needed to be made to the network.

1.2 TRIP GENERATION

The trip generation model estimates daily person trips for a typical weekday. A production trip end is where a trip begins from the home of the trip maker and an attraction trip-end is where a trip is destined to. Trip generation models are based on Socio-Economic Data (SED), in which commercial, warehouse and industrial sites are represented in terms of number of employees instead of square-footage or acreage of the development in land use models. Similar to RivTAM, 52 socioeconomic variables describing population, household, school enrollments, household income, workers, and employment were used as the major inputs for the trip generation model.

The SED data for the study area was provided by the City of Riverside. This data was updated in the Overlook Parkway model. No other changes in term of model structure and methodologies in these three processes.

1.3 TRIP DISTRIBUTION, MODE SPLIT AND TRIP ASSIGNMENT

The trip distribution process allocates the zonal person trips generated by the trip generation model to movements between zone pairs based on the travel time/cost between the zones. The mode split determines the number of trips taking a variety of travel modes including non-motorized mode, auto mode, and transit mode. The trip assignment model loads trips to the roadway network. As compared to RivTAM, there was no change in term of model structure and methodologies in these three processes.

2.0 TRAFFIC ASSIGNMENT VALIDATION

The final step in the four step travel demand modeling process is the assignment of the vehicle trip tables to the highway network. The traffic assignment process chooses the specific travel route between zone pairs for any given trip for each of the peak and off-peak time periods. The selection of a particular route is based upon travel times reflecting the traffic volume, roadway capacity and speed relationships. The procedure used in the Overlook Parkway model is an equilibrium traffic assignment process, whereby the trip table is loaded incrementally to account for capacity restraint and travel time variations that occur when particular network links become congested. The Highway Assignment process is the last and typically the most iterative part of validation/calibration of a travel demand model. To validate the model outputs, base-year ground counts were compared to the modeled base year traffic volumes on the highway network for the two existing conditions scenarios of both Crystal View Terrace and Green Orchard Place gates open or closed. New average daily traffic (ADT) volumes for the arterial roadways were collected for the screenline locations for the two scenarios.

The screenlines' Existing vs. Model percent differences shall be within the maximum desirable deviation adopted by NCHRP Report 255 and FHWA. Also, other performance measures were evaluated to ensure better validation of the Overlook Parkway model. These measures are:

- Comparison of observed versus estimated volumes for all links with counts
- Root Mean Square Error (RMSE)
- Comparison of observed versus estimated volumes for all links with counts
- Coefficient of Determination (R^2)

These performance measures are further described below.

2.1 COMPARISON OF OBSERVED VERSUS ESTIMATED VOLUMES BY SCREENLINE (SCREENLINE ANALYSIS)

Screenline analysis is often used in the validation of a model's traffic assignment. Screenlines are imaginary lines drawn across several sections of roadways along major travel corridors to assess the performance of the model by comparing the total model assigned volumes and total actual counts for those roadway segments. All model links (segments) that cross a screenline form a group of roadways within a corridor for which the total model produced volumes and ground traffic counts are aggregated and compared. Six (6) screenlines were identified across different locations in the study area. **Figure 1** shows the location of these screenlines used in the Overlook Parkway study area. After identifying the screenlines, the individual link volumes were summed from both the model and the ground counts across all screenlines. **Tables 1 and 2** show the sum of the existing counts and sum of the assigned flows across each screenline, as well as the percentage difference between the two for the two scenarios. As shown in the tables, the assigned volumes for all screenlines are within the acceptable industry validation standards. The overall ratio between all counts and assigned volumes across all screenlines is -- 2.0 and -1.4 percent. **Figures 2 and 3** illustrate the maximum desirable deviation in total screenline volumes adopted by NCHRP Report 255 and FHWA, which prescribe the national model validation standards. As shown in the figures, all the screenlines' Existing/Model ratios are well within the tolerance levels in exception of screenline #6. This indicates that the traffic volumes on all screenlines and traffic patterns are very closely validated to the existing conditions, well within industry standards.

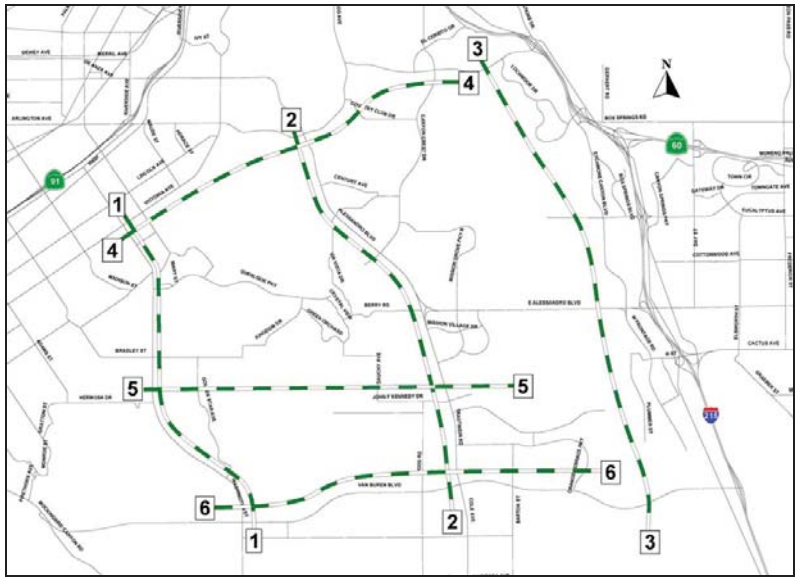

FIGURE 1: SCREENLINES IN THE STUDY AREA

TABLE 1: SCREENLINE ANALYSIS – GATES OPEN

SCREENLINE	STREET	SEGMENT	Existing ADT	Existing Model ADT	Abs. Difference	% Difference	Difference^2
1	VICTORIA AVE	East of Washington St	10,001	10,243	-242	2%	58,729
1	OVERLOOK PKWY	East of Washington St	3,536	3,307	229	-6%	52,642
1	BRADLEY ST	East of Washington St	2,628	1,791	837	-32%	701,006
1	VAN BUREN BLVD	East of Washington St	37,891	33,841	4,050	-11%	16,403,476
		TOTAL	***54,056***	***49,182***	***4,874***	**-9%**	***17,215,853***
		%RMSE					**18%**
2	ARLINGTON AVE	West of Alessandro Blvd	34,325	38,174	-3,849	11%	14,817,469
2	BERRY RD	West of Trautwein Rd	1,016	1,174	-158	16%	24,855
2	VAN BUREN BLVD	West of Trautwein Rd	34,593	34,294	299	-1%	89,592
		TOTAL	***69,934***	***73,642***	***-3,708***	**5%**	***14,931,916***
		%RMSE					**12%**
3	CENTRAL AVE	West of Lochmoor Dr	18,144	18,160	-16	0%	269
3	E ALESSANDRO BLVD	West of Cycamore Canyon Rd	37,846	43,613	-5,767	15%	33,261,851
3	VAN BUREN BLVD	West of Plummer St	30,407	31,415	-1,008	3%	1,015,735
		TOTAL	***86,397***	***93,189***	***-6,792***	**8%**	***34,277,855***
		%RMSE					**14%**
4	WASHINGTON ST	South of Victoria Ave	16,360	16,935	-575	4%	330,808
4	ALESSANDRO BLVD	South of Arlington Ave	46,989	49,484	-2,495	5%	6,226,673
4	CANYON CREST DR	South of Central Ave	17,168	21,985	-4,817	28%	23,205,040
		TOTAL	***80,517***	***88,405***	***-7,888***	**10%**	***29,762,521***
		%RMSE					**14%**
5	WASHINGTON ST	North of Valle Vista Way	15,190	13,859	1,331	-9%	1,771,903
5	GOLDEN STAR AVE	North of Valle Vista Way	660	552	108	-16%	11,720
5	DAUCHY AVE	North of John F Kennedy Dr	1,505	1,471	34	-2%	1,139
5	TRAUTWEIN RD	North of John F Kennedy Dr	36,508	28,917	7,591	-21%	57,627,458
		TOTAL	***53,863***	***44,799***	***9,064***	**-17%**	***59,412,219***
		%RMSE					**33%**
6	WASHINGTON ST	North of Van Buren Blvd	15,516	12,843	2,673	-17%	7,144,696
6	WOOD RD	North of Van Buren Blvd	9,877	3,505	6,372	-65%	40,603,793
6	TRAUTWEIN RD	North of Van Buren Blvd	17,600	17,874	-274	2%	75,284
6	ORANGE TERRACE PKY	North of Van Buren Blvd	8,370	4,867	3,503	-42%	12,271,960
		TOTAL	***51,363***	***39,089***	***12,274***	**-24%**	***60,095,733***
		%RMSE					**35%**
		ALL SCREENLINES	***396,130***	***388,304***	***7,826***	**-2.0%**	***215,696,097***
		%RMSE					**17%**

TABLE 2: SCREENLINE ANALYSIS – GATES CLOSED

SCREENLINE	STREET	SEGMENT	Existing ADT	Existing Model ADT	Abs. Difference	% Difference	Difference^2
1	VICTORIA AVE	East of Washington St	10,661	10,528	133	-1%	17,764
1	OVERLOOK PKWY	East of Washington St	2,717	2,367	350	-13%	122,770
1	BRADLEY ST	East of Washington St	2,805	1,889	916	-33%	839,402
1	VAN BUREN BLVD	East of Washington St	38,085	34,732	3,353	-9%	11,242,053
		TOTAL	***54,268***	***49,515***	***4,753***	***-9%***	***12,221,990***
		%RMSE					**15%**
2	ARLINGTON AVE	West of Alessandro Blvd	33,924	38,862	-4,938	15%	24,384,684
2	BERRY RD	West of Trautwein Rd	694	354	340	-49%	115,547
2	VAN BUREN BLVD	West of Trautwein Rd	34,330	34,910	-580	2%	336,922
		TOTAL	***68,948***	***74,127***	***-5,179***	***8%***	***24,837,153***
		%RMSE					**15%**
3	CENTRAL AVE	West of Lochmoor Dr	17,404	18,191	-787	5%	618,876
3	E ALESSANDRO BLVD	West of Cycamore Canyon Rd	37,516	43,387	-5,871	16%	34,467,456
3	VAN BUREN BLVD	West of Plummer St	28,219	31,284	-3,065	11%	9,395,992
		TOTAL	***83,139***	***92,862***	***-9,723***	***12%***	***44,482,324***
		%RMSE					**17%**
4	WASHINGTON ST	South of Victoria Ave	16,502	16,616	-114	1%	12,887
4	ALESSANDRO BLVD	South of Arlington Ave	47,391	50,353	-2,962	6%	8,775,258
4	CANYON CREST DR	South of Central Ave	17,597	22,019	-4,422	25%	19,555,678
		TOTAL	***81,490***	***88,988***	***-7,498***	***9%***	***28,343,823***
		%RMSE					**14%**
5	WASHINGTON ST	North of Valle Vista Way	15,633	14,179	1,454	-9%	2,114,887
5	GOLDEN STAR AVE	North of Valle Vista Way	744	863	-119	16%	14,256
5	DAUCHY AVE	North of John F Kennedy Dr	1,026	1,011	15	-2%	238
5	TRAUTWEIN RD	North of John F Kennedy Dr	38,447	29,183	9,264	-24%	85,820,510
		TOTAL	***55,850***	***45,236***	***10,614***	***-19%***	***87,949,890***
		%RMSE					**39%**
6	WASHINGTON ST	North of Van Buren Blvd	16,385	13,489	2,896	-18%	8,388,860
6	WOOD RD	North of Van Buren Blvd	10,014	3,727	6,287	-63%	39,530,438
6	TRAUTWEIN RD	North of Van Buren Blvd	17,718	17,954	-236	1%	55,806
6	ORANGE TERRACE PKY	North of Van Buren Blvd	8,399	4,641	3,758	-45%	14,126,260
		TOTAL	***52,516***	***39,810***	***12,706***	***-24%***	***62,101,364***
		%RMSE					**35%**
		ALL SCREENLINES	***396,211***	***390,538***	***5,673***	***-1.4%***	***259,936,545***
		%RMSE					**19%**

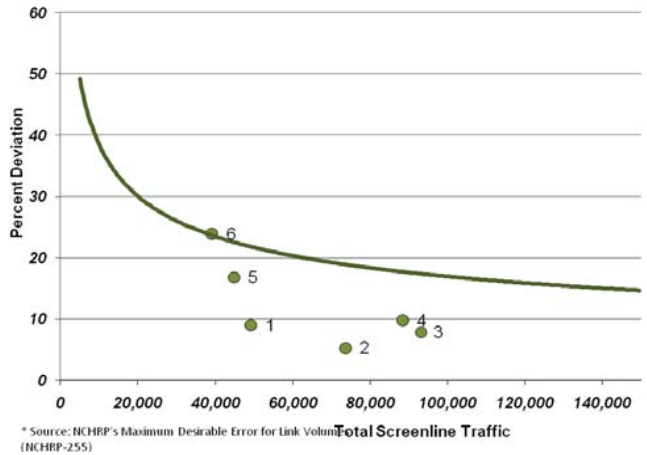

FIGURE 2: SCREENLINE VALIDATION DIAGRAM – GATES OPEN

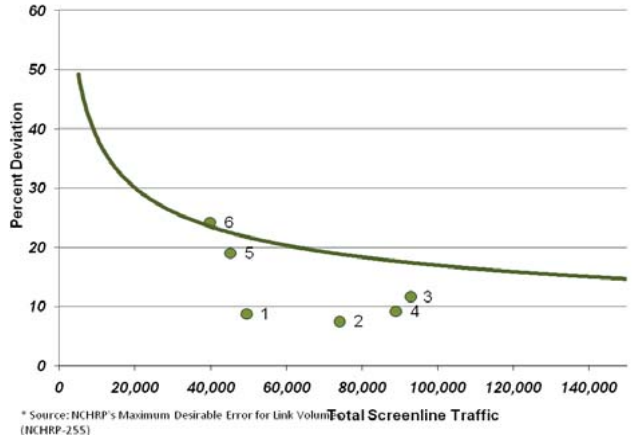

FIGURE 3: SCREENLINE VALIDATION DIAGRAM – GATES CLOSED

2.2 ROOT MEAN SQUARE ERROR (RMSE)

The RMSE is a quadratic scoring rule which measures the average magnitude of the error. The equation for the RMSE is as follows:

$$\%RMSE \equiv \left[\frac{\sum_i (Model_i - Count_i)^2 / (NumberofCounts - 1)^{0.5} * 100}{(\sum_i Count_i \,/\, NumberofCounts)} \right]$$

Based on the *SCAG 2003 Model Validation and Summary (May 2007)* and *Travel Model Improvement Program (TMIP) Model Validation and Reasonableness Checking Manual (June 2001)*, RMSE is suggested to be less than 30% for each screenline and total screenlines. As seen in Tables 1 and 2, the %RMSE for the individual screenlines (in exception of screenlines 5 and 6) and the total screenlines is well below the suggested threshold and the model shows good fit with the ground counts.

2.3 COMPARISON OF OBSERVED VERSUS ESTIMATED VOLUMES FOR ALL LINKS WITH COUNTS

In order to evaluate the aggregate statistics on the validity of the traffic assignment across all points in the model regardless of specific corridors or screenlines, model predicted vs. counted traffic volumes were compared on model segments with available traffic counts for all sample segments. **Figures 4 and 5** compare the actual volumes with the daily model output volumes for all roadway/highway segments including the freeway facilities. As shown in the figures, the numbers are generally clustered along a 45° fit-line which shows good correlation between actual and modeled volumes.

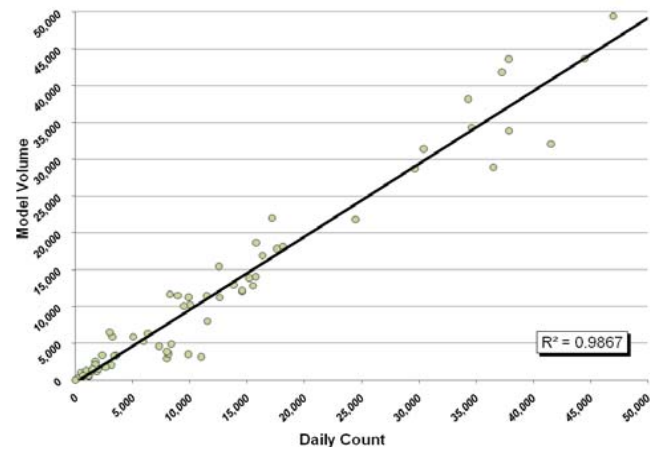

FIGURE 4: ACTUAL VOLUMES VERSUS MODEL VOLUMES – GATES OPEN

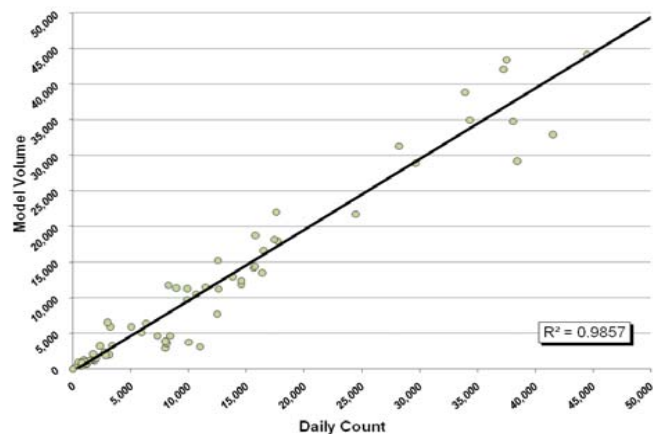

FIGURE 5: ACTUAL VOLUMES VERSUS MODEL VOLUMES – GATES CLOSED

2.4 COEFFICIENT OF DETERMINATION (R^2)

Another important measure of comparison for the fit between observed traffic counts and estimated model volumes is the Coefficient of Determination (R^2). The recommended value of R^2 is greater than 0.88 *(Model Validation and Reasonableness Checking Manual, Travel Model Improvement Program, June 2001)*. A value of 1.00 represents a perfect fit, but even if traffic counts were compared against themselves, the daily variation would not allow for a regression coefficient of 1.00, due to natural variation in counts. The computed value of R^2 was estimated to be 0.986 and 0.985 for the Overlook's two existing conditions scenarios, which shows that the model performance is within a highly reasonable range, representing an excellent fit.

$$r^2 \equiv \left[\frac{n\sum(x_i y_i) - (\sum(x_i)(\sum(y_i)}{\sqrt{\left[n\sum x_i^{\,2} - (\sum x_i)^2\right]\left[n\sum y_i^{\,2} - (\sum y_i)^2\right]}} \right]^2$$

where: x = counts
y = model volumes
n = number of counts

3.0 CONCLUSIONS

The results of the model validation/calibration process for the Overlook Parkway Traffic Analysis Model, based on the detailed review of each individual module, indicate a very favorable validation for 2010-11 base year conditions. Trip Assignment summary statistics of the focused model are within acceptable industry standards. In addition, assignment volumes summed along critical screenlines and travel corridors closely replicate actual ground counts based on established industry standards. It is therefore concluded that the Overlook Model is adequate for use in developing forecast traffic volumes to be utilized in the various existing and future transportation analysis efforts.

APPENDIX B: EXISTING INTERSECTION PEAK HOUR AND ADT COUNTS

APPENDIX B-1:
EXISTING INTERSECTION PEAK HOUR AND ADT COUNTS GATES CLOSED

Counts Unlimited Inc.
PO Box 1178
Corona, CA 92878
(951) 268-6268

City of Riverside
N/S: Madison Street
E/W: SR-91 Westbound Ramps
Weather: Sunny

File Name : RIVMA91WAM
Site Code : 11046061
Start Date : 3/29/2011
Page No : 1

Groups Printed- Total Volume

	Madison Street Southbound				SR-91 Westbound Off Ramp Westbound				Madison Street Northbound				SR-91 Westbound On Ramp Eastbound				
Start Time	Left	Thru	Right	App. Total	Left	Thru	Right	App. Total	Left	Thru	Right	App. Total	Left	Thru	Right	App. Total	Int. Total
07:00 AM	0	106	64	170	47	1	37	85	62	90	0	152	0	0	0	0	407
07:15 AM	0	110	48	158	67	0	32	99	87	135	3	225	0	0	0	0	482
07:30 AM	0	157	88	245	60	1	51	112	85	144	0	229	0	0	0	0	586
07:45 AM	0	141	59	200	71	0	51	122	106	191	0	297	0	0	0	0	619
Total	0	514	259	773	245	2	171	418	340	560	3	903	0	0	0	0	2094
08:00 AM	0	170	67	237	78	0	43	121	77	169	0	246	0	0	0	0	604
08:15 AM	0	116	55	171	57	0	61	118	74	143	0	217	0	0	0	0	506
08:30 AM	0	98	54	152	87	1	49	137	66	147	0	213	0	0	0	0	502
08:45 AM	0	95	59	154	68	0	46	114	76	147	2	225	0	0	0	0	493
Total	0	479	235	714	290	1	199	490	293	606	2	901	0	0	0	0	2105
Grand Total	0	993	494	1487	535	3	370	908	633	1166	5	1804	0	0	0	0	4199
Apprch %	0	66.8	33.2		58.9	0.3	40.7		35.1	64.6	0.3		0	0	0		
Total %	0	23.6	11.8	35.4	12.7	0.1	8.8	21.6	15.1	27.8	0.1	43	0	0	0	0	

	Madison Street Southbound				SR-91 Westbound Off Ramp Westbound				Madison Street Northbound				SR-91 Westbound On Ramp Eastbound				
Start Time	Left	Thru	Right	App. Total	Left	Thru	Right	App. Total	Left	Thru	Right	App. Total	Left	Thru	Right	App. Total	Int. Total
Peak Hour Analysis From 07:00 AM to 08:45 AM - Peak 1 of 1																	
Peak Hour for Entire Intersection Begins at 07:30 AM																	
07:30 AM	0	157	**88**	**245**	60	**1**	51	112	85	144	0	229	0	0	0	0	586
07:45 AM	0	141	59	200	71	0	51	**122**	**106**	**191**	0	**297**	0	0	0	0	**619**
08:00 AM	0	**170**	67	237	**78**	0	43	121	77	169	0	246	0	0	0	0	604
08:15 AM	0	116	55	171	57	0	**61**	118	74	143	0	217	0	0	0	0	506
Total Volume	0	584	269	853	266	1	206	473	342	647	0	989	0	0	0	0	2315
% App. Total	0	68.5	31.5		56.2	0.2	43.6		34.6	65.4	0		0	0	0		
PHF	.000	.859	.764	.870	.853	.250	.844	.969	.807	.847	.000	.832	.000	.000	.000	.000	.935

Counts Unlimited Inc.
PO Box 1178
Corona, CA 92878
(951) 268-6268

City of Riverside
N/S: Madison Street
E/W: SR-91 Westbound Ramps
Weather: Sunny

File Name : RIVMA91WAM
Site Code : 11046061
Start Date : 3/29/2011
Page No : 2

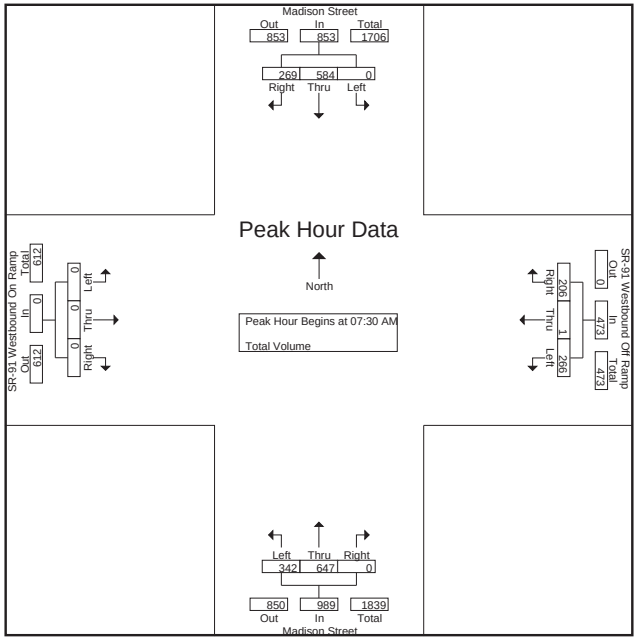

Peak Hour Analysis From 07:00 AM to 08:45 AM - Peak 1 of 1

Peak Hour for Each Approach Begins at:

	07:30 AM				07:45 AM				07:15 AM				07:00 AM			
0 mins.	0	157	**88**	**245**	71	0	51	122	87	135	**3**	225	0	0	0	0
15 mins.	0	141	59	200	78	0	43	121	85	144	0	229	0	0	0	0
30 mins.	0	**170**	67	237	57	0	**61**	118	**106**	**191**	0	**297**	0	0	0	0
45 mins.	0	116	55	171	**87**	**1**	49	**137**	77	169	0	246	0	0	0	0
Total Volume	0	584	269	853	293	1	204	498	355	639	3	997	0	0	0	0
% App. Total	0	68.5	31.5		58.8	0.2	41		35.6	64.1	0.3		0	0	0	
PHF	.000	.859	.764	.870	.842	.250	.836	.909	.837	.836	.250	.839	.000	.000	.000	.000

Counts Unlimited Inc.
PO Box 1178
Corona, CA 92878
(951) 268-6268

City of Riverside
N/S: Madison Street
E/W: SR-91 Westbound Ramps
Weather: Sunny

File Name : RIVMA91WPM
Site Code : 11046061
Start Date : 3/29/2011
Page No : 1

Groups Printed- Total Volume

	Madison Street Southbound				SR-91 Westbound Off Ramp Westbound				Madison Street Northbound				SR-91 Westbound On Ramp Eastbound				
Start Time	Left	Thru	Right	App. Total	Left	Thru	Right	App. Total	Left	Thru	Right	App. Total	Left	Thru	Right	App. Total	Int. Total
04:00 PM	0	142	71	213	66	0	39	105	82	145	0	227	0	0	0	0	545
04:15 PM	0	157	47	204	63	0	63	126	74	151	0	225	0	0	0	0	555
04:30 PM	0	146	63	209	73	0	63	136	76	171	0	247	0	0	0	0	592
04:45 PM	0	154	60	214	58	0	42	100	68	142	0	210	0	0	0	0	524
Total	0	599	241	840	260	0	207	467	300	609	0	909	0	0	0	0	2216
05:00 PM	0	155	82	237	70	0	39	109	97	147	0	244	0	0	0	0	590
05:15 PM	0	191	71	262	59	1	63	123	57	177	0	234	0	0	0	0	619
05:30 PM	0	155	88	243	66	0	49	115	85	174	0	259	0	0	0	0	617
05:45 PM	0	170	77	247	51	1	50	102	89	165	0	254	0	0	0	0	603
Total	0	671	318	989	246	2	201	449	328	663	0	991	0	0	0	0	2429
Grand Total	0	1270	559	1829	506	2	408	916	628	1272	0	1900	0	0	0	0	4645
Apprch %	0	69.4	30.6		55.2	0.2	44.5		33.1	66.9	0		0	0	0		
Total %	0	27.3	12	39.4	10.9	0	8.8	19.7	13.5	27.4	0	40.9	0	0	0	0	

	Madison Street Southbound				SR-91 Westbound Off Ramp Westbound				Madison Street Northbound				SR-91 Westbound On Ramp Eastbound				
Start Time	Left	Thru	Right	App. Total	Left	Thru	Right	App. Total	Left	Thru	Right	App. Total	Left	Thru	Right	App. Total	Int. Total
Peak Hour Analysis From 04:00 PM to 05:45 PM - Peak 1 of 1																	
Peak Hour for Entire Intersection Begins at 05:00 PM																	
05:00 PM	0	155	82	237	**70**	0	39	109	**97**	147	0	244	0	0	0	0	590
05:15 PM	0	**191**	71	**262**	59	**1**	**63**	**123**	57	**177**	0	234	0	0	0	0	**619**
05:30 PM	0	155	**88**	243	66	0	49	115	85	174	0	**259**	0	0	0	0	617
05:45 PM	0	170	77	247	51	1	50	102	89	165	0	254	0	0	0	0	603
Total Volume	0	671	318	989	246	2	201	449	328	663	0	991	0	0	0	0	2429
% App. Total	0	67.8	32.2		54.8	0.4	44.8		33.1	66.9	0		0	0	0		
PHF	.000	.878	.903	.944	.879	.500	.798	.913	.845	.936	.000	.957	.000	.000	.000	.000	.981

Counts Unlimited Inc.
PO Box 1178
Corona, CA 92878
(951) 268-6268

City of Riverside
N/S: Madison Street
E/W: SR-91 Westbound Ramps
Weather: Sunny

File Name : RIVMA91WPM
Site Code : 11046061
Start Date : 3/29/2011
Page No : 2

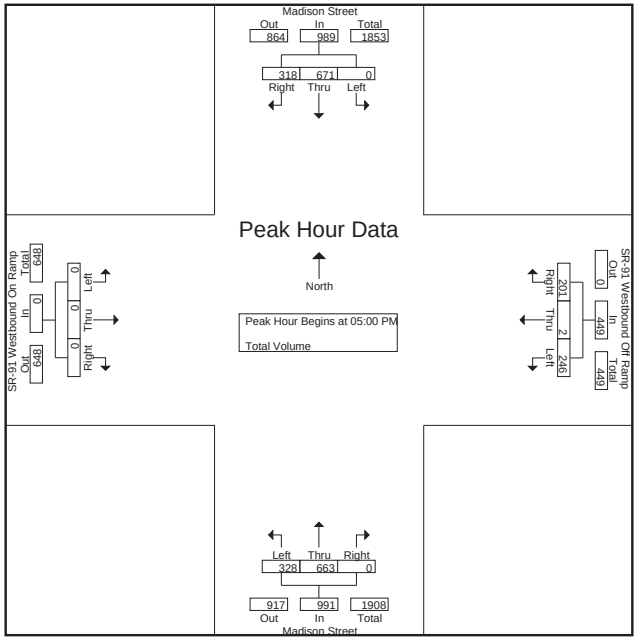

Peak Hour Analysis From 04:00 PM to 05:45 PM - Peak 1 of 1

Peak Hour for Each Approach Begins at:

	05:00 PM				04:15 PM				05:00 PM				04:00 PM			
0 mins.	0	155	82	237	63	0	**63**	126	**97**	147	0	244	0	0	0	0
15 mins.	0	**191**	71	**262**	**73**	0	63	**136**	57	**177**	0	234	0	0	0	0
30 mins.	0	155	**88**	243	58	0	42	100	85	174	0	**259**	0	0	0	0
45 mins.	0	170	77	247	70	0	39	109	89	165	0	254	0	0	0	0
Total Volume	0	671	318	989	264	0	207	471	328	663	0	991	0	0	0	0
% App. Total	0	67.8	32.2		56.1	0	43.9		33.1	66.9	0		0	0	0	
PHF	.000	.878	.903	.944	.904	.000	.821	.866	.845	.936	.000	.957	.000	.000	.000	.000

Counts Unlimited, Inc.
PO Box 1178
Corona, CA 92878
(951) 268-6268

City of Riverside
N/S: Madison Street
E/W: SR-91 Eastbound Ramps
Weather: Sunny

File Name : RIVMA91EAM
Site Code : 11046155
Start Date : 3/29/2011
Page No : 1

Groups Printed- Total Volume

	Madison Street Southbound				SR-91 Eastbound On Ramp Westbound				Madison Street Northbound				SR-91 Eastbound Off Ramp Eastbound				
Start Time	Left	Thru	Right	App. Total	Left	Thru	Right	App. Total	Left	Thru	Right	App. Total	Left	Thru	Right	App. Total	Int. Total
07:00 AM	44	101	0	145	0	0	0	0	0	145	45	190	23	1	51	75	410
07:15 AM	55	113	0	168	0	0	0	0	0	164	28	192	37	2	56	95	455
07:30 AM	62	131	0	193	0	0	0	0	0	205	80	285	30	0	62	92	570
07:45 AM	39	176	0	215	0	0	0	0	0	215	64	279	77	2	59	138	632
Total	200	521	0	721	0	0	0	0	0	729	217	946	167	5	228	400	2067
08:00 AM	42	198	0	240	0	0	0	0	0	198	36	234	66	7	62	135	609
08:15 AM	46	149	0	195	0	0	0	0	0	162	21	183	54	1	68	123	501
08:30 AM	35	137	0	172	0	0	0	0	0	165	31	196	59	3	59	121	489
08:45 AM	26	140	0	166	0	0	0	0	0	145	34	179	69	0	96	165	510
Total	149	624	0	773	0	0	0	0	0	670	122	792	248	11	285	544	2109
Grand Total	349	1145	0	1494	0	0	0	0	0	1399	339	1738	415	16	513	944	4176
Apprch %	23.4	76.6	0		0	0	0		0	80.5	19.5		44	1.7	54.3		
Total %	8.4	27.4	0	35.8	0	0	0	0	0	33.5	8.1	41.6	9.9	0.4	12.3	22.6	

	Madison Street Southbound				SR-91 Eastbound On Ramp Westbound				Madison Street Northbound				SR-91 Eastbound Off Ramp Eastbound				
Start Time	Left	Thru	Right	App. Total	Left	Thru	Right	App. Total	Left	Thru	Right	App. Total	Left	Thru	Right	App. Total	Int. Total
Peak Hour Analysis From 07:00 AM to 08:45 AM - Peak 1 of 1																	
Peak Hour for Entire Intersection Begins at 07:30 AM																	
07:30 AM	**62**	131	0	193	0	0	0	0	0	205	**80**	**285**	30	0	62	92	570
07:45 AM	39	176	0	215	0	0	0	0	0	**215**	64	279	**77**	2	59	**138**	**632**
08:00 AM	42	**198**	0	**240**	0	0	0	0	0	198	36	234	66	**7**	62	135	609
08:15 AM	46	149	0	195	0	0	0	0	0	162	21	183	54	1	**68**	123	501
Total Volume	189	654	0	843	0	0	0	0	0	780	201	981	227	10	251	488	2312
% App. Total	22.4	77.6	0		0	0	0		0	79.5	20.5		46.5	2	51.4		
PHF	.762	.826	.000	.878	.000	.000	.000	.000	.000	.907	.628	.861	.737	.357	.923	.884	.915

Counts Unlimited, Inc.
PO Box 1178
Corona, CA 92878
(951) 268-6268

□ity of Ri□erside
N□S: Madison Street
E□W: SR-91 Eastbound Ramps
Weather: Sunny

File Name : RIVMA91EAM
Site □ode : 11046155
Start □ate : 3□29□2011
Page No : 2

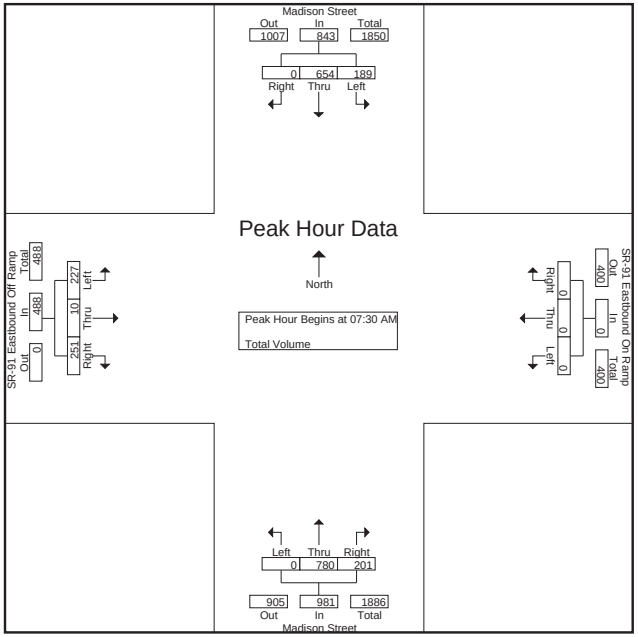

Peak Hour Analysis From 07:00 AM to 08:45 AM - Peak 1 of 1
Peak Hour for Each Approach Begins at:

	07:30 AM				07:00 AM				07:15 AM				08:00 AM			
+0 mins.	**62**	131	0	193	0	0	0	0	0	164	28	192	66	**7**	62	135
+15 mins.	39	176	0	215	0	0	0	0	0	205	**80**	**285**	54	1	68	123
+30 mins.	42	**198**	0	**240**	0	0	0	0	0	**215**	64	279	59	3	59	121
+45 mins.	46	149	0	195	0	0	0	0	0	198	36	234	**69**	0	**96**	**165**
Total Volume	189	654	0	843	0	0	0	0	0	782	208	990	248	11	285	544
% App. Total	22.4	77.6	0		0	0	0		0	79	21		45.6	2	52.4	
PHF	.762	.826	.000	.878	.000	.000	.000	.000	.000	.909	.650	.868	.899	.393	.742	.824

Counts Unlimited Inc.
PO Box 1178
Corona, CA 92878
(951) 268-6268

City of Riverside
N/S: Madison Street
E/W: SR-91 Eastbound Ramps
Weather: Sunny

File Name : RIVMA91EPM
Site Code : 11046155
Start Date : 3/29/2011
Page No : 1

Groups Printed- Total Volume

	Madison Street Southbound				SR-91 Eastbound On Ramp Westbound				Madison Street Northbound				SR-91 Eastbound Off Ramp Eastbound				
Start Time	Left	Thru	Right	App. Total	Left	Thru	Right	App. Total	Left	Thru	Right	App. Total	Left	Thru	Right	App. Total	Int. Total
04:00 PM	44	165	0	209	0	0	0	0	0	155	34	189	50	2	69	121	519
04:15 PM	46	160	0	206	0	0	0	0	0	168	57	225	52	0	68	120	551
04:30 PM	52	151	0	203	0	0	0	0	0	200	44	244	66	0	75	141	588
04:45 PM	56	165	0	221	0	0	0	0	0	191	73	264	50	0	58	108	593
Total	198	641	0	839	0	0	0	0	0	714	208	922	218	2	270	490	2251
05:00 PM	58	170	0	228	0	0	0	0	0	185	47	232	60	0	59	119	579
05:15 PM	52	180	0	232	0	0	0	0	0	175	57	232	58	0	62	120	584
05:30 PM	50	166	0	216	0	0	0	0	0	169	56	225	54	0	62	116	557
05:45 PM	44	161	0	205	0	0	0	0	0	165	44	209	58	0	50	108	522
Total	204	677	0	881	0	0	0	0	0	694	204	898	230	0	233	463	2242
Grand Total	402	1318	0	1720	0	0	0	0	0	1408	412	1820	448	2	503	953	4493
Apprch %	23.4	76.6	0		0	0	0		0	77.4	22.6		47	0.2	52.8		
Total %	8.9	29.3	0	38.3	0	0	0	0	0	31.3	9.2	40.5	10	0	11.2	21.2	

	Madison Street Southbound				SR-91 Eastbound On Ramp Westbound				Madison Street Northbound				SR-91 Eastbound Off Ramp Eastbound				
Start Time	Left	Thru	Right	App. Total	Left	Thru	Right	App. Total	Left	Thru	Right	App. Total	Left	Thru	Right	App. Total	Int. Total
Peak Hour Analysis From 04:00 PM to 05:45 PM - Peak 1 of 1																	
Peak Hour for Entire Intersection Begins at 04:30 PM																	
04:30 PM	52	151	0	203	0	0	0	0	0	**200**	44	244	**66**	0	**75**	**141**	588
04:45 PM	56	165	0	221	0	0	0	0	0	191	**73**	**264**	50	0	58	108	**593**
05:00 PM	**58**	170	0	228	0	0	0	0	0	185	47	232	60	0	59	119	579
05:15 PM	52	**180**	0	**232**	0	0	0	0	0	175	57	232	58	0	62	120	584
Total Volume	218	666	0	884	0	0	0	0	0	751	221	972	234	0	254	488	2344
% App. Total	24.7	75.3	0		0	0	0		0	77.3	22.7		48	0	52		
PHF	.940	.925	.000	.953	.000	.000	.000	.000	.000	.939	.757	.920	.886	.000	.847	.865	.988

Counts Unlimited Inc.
PO Box 1178
Corona, CA 92878
(951) 268-6268

City of Riverside
N/S: Madison Street
E/W: SR-91 Eastbound Ramps
Weather: Sunny

File Name : RIVMA91EPM
Site Code : 11046155
Start Date : 3/29/2011
Page No : 2

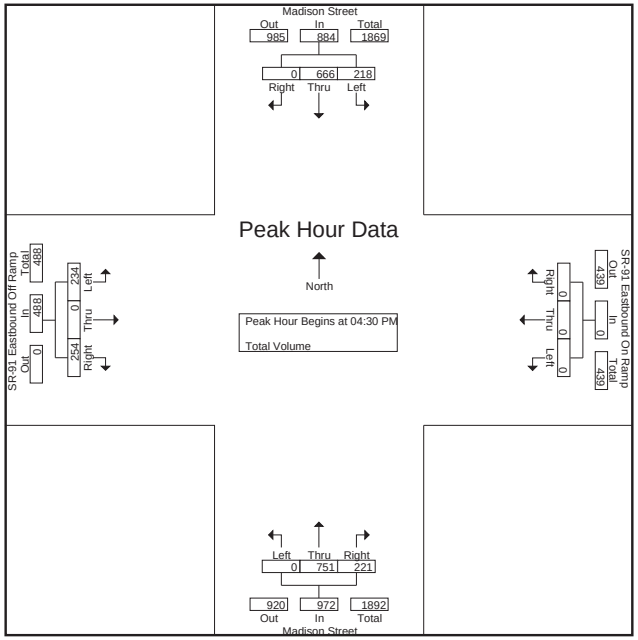

Peak Hour Analysis From 04:00 PM to 05:45 PM - Peak 1 of 1
Peak Hour for Each Approach Begins at:

	04:45 PM				04:00 PM				04:30 PM				04:00 PM			
+0 mins.	56	165	0	221	0	0	0	0	0	**200**	44	244	50	**2**	69	121
+15 mins.	**58**	170	0	228	0	0	0	0	0	191	**73**	**264**	52	0	68	120
+30 mins.	52	**180**	0	**232**	0	0	0	0	0	185	47	232	**66**	0	**75**	**141**
+45 mins.	50	166	0	216	0	0	0	0	0	175	57	232	50	0	58	108
Total Volume	216	681	0	897	0	0	0	0	0	751	221	972	218	2	270	490
% App. Total	24.1	75.9	0		0	0	0		0	77.3	22.7		44.5	0.4	55.1	
PHF	.931	.946	.000	.967	.000	.000	.000	.000	.000	.939	.757	.920	.826	.250	.900	.869

Counts Unlimited Inc.
PO Box 1178
Corona, CA 92878
(951) 268-6268

City of Riverside
N/S: Madison Street
E/W: Indiana Avenue
Weather: Sunny

File Name : RIVMAINAM
Site Code : 11046662
Start Date : 3/29/2011
Page No : 1

Groups Printed- Total Volume

	Madison Street Southbound				Indiana Avenue Westbound				Madison Street Northbound				Indiana Avenue Eastbound				
Start Time	Left	Thru	Right	App. Total	Left	Thru	Right	App. Total	Left	Thru	Right	App. Total	Left	Thru	Right	App. Total	Int. Total
07:00 AM	54	78	24	156	2	23	85	110	0	97	13	110	10	47	2	59	435
07:15 AM	71	85	24	180	1	32	78	111	5	118	6	129	20	77	4	101	521
07:30 AM	53	79	28	160	7	55	83	145	14	131	6	151	55	142	7	204	660
07:45 AM	86	98	42	226	2	54	90	146	9	143	2	154	49	136	7	192	718
Total	264	340	118	722	12	164	336	512	28	489	27	544	134	402	20	556	2334
08:00 AM	89	105	34	228	3	41	53	97	9	132	9	150	49	148	10	207	682
08:15 AM	85	115	39	239	8	45	66	119	8	82	1	91	34	104	8	146	595
08:30 AM	60	95	30	185	2	42	71	115	13	104	5	122	16	81	4	101	523
08:45 AM	98	105	46	249	6	42	75	123	16	85	9	110	26	77	8	111	593
Total	332	420	149	901	19	170	265	454	46	403	24	473	125	410	30	565	2393
Grand Total	596	760	267	1623	31	334	601	966	74	892	51	1017	259	812	50	1121	4727
Apprch %	36.7	46.8	16.5		3.2	34.6	62.2		7.3	87.7	5		23.1	72.4	4.5		
Total %	12.6	16.1	5.6	34.3	0.7	7.1	12.7	20.4	1.6	18.9	1.1	21.5	5.5	17.2	1.1	23.7	

	Madison Street Southbound				Indiana Avenue Westbound				Madison Street Northbound				Indiana Avenue Eastbound				
Start Time	Left	Thru	Right	App. Total	Left	Thru	Right	App. Total	Left	Thru	Right	App. Total	Left	Thru	Right	App. Total	Int. Total
Peak Hour Analysis From 07:00 AM to 08:45 AM - Peak 1 of 1																	
Peak Hour for Entire Intersection Begins at 07:30 AM																	
07:30 AM	53	79	28	160	7	**55**	83	145	**14**	131	6	151	**55**	142	7	204	660
07:45 AM	86	98	**42**	226	2	54	**90**	**146**	9	**143**	2	**154**	49	136	7	192	**718**
08:00 AM	**89**	105	34	228	3	41	53	97	9	132	**9**	150	49	**148**	**10**	**207**	682
08:15 AM	85	**115**	39	**239**	**8**	45	66	119	8	82	1	91	34	104	8	146	595
Total Volume	313	397	143	853	20	195	292	507	40	488	18	546	187	530	32	749	2655
% App. Total	36.7	46.5	16.8		3.9	38.5	57.6		7.3	89.4	3.3		25	70.8	4.3		
PHF	.879	.863	.851	.892	.625	.886	.811	.868	.714	.853	.500	.886	.850	.895	.800	.905	.924

Counts Unlimited Inc.
PO Box 1178
Corona, CA 92878
(951) 268-6268

City of Riverside
N/S: Madison Street
E/W: Indiana Avenue
Weather: Sunny

File Name : RIVMAINAM
Site Code : 11046662
Start Date : 3/29/2011
Page No : 2

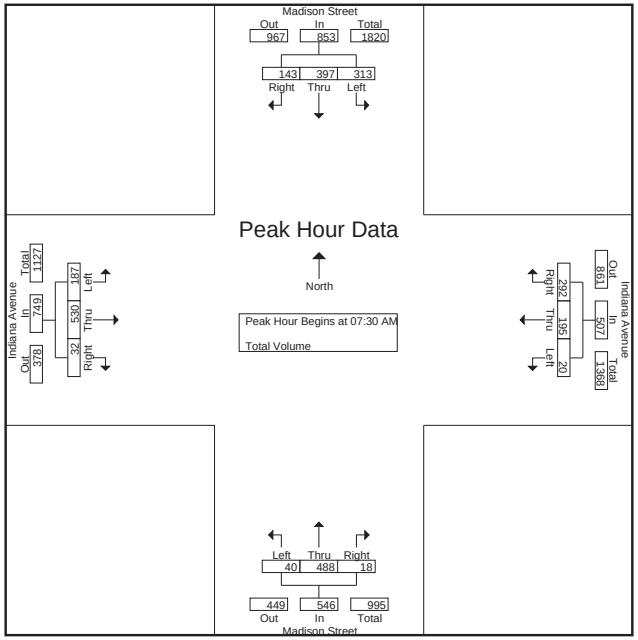

Peak Hour Analysis From 07:00 AM to 08:45 AM - Peak 1 of 1
Peak Hour for Each Approach Begins at:

	08:00 AM				07:00 AM				07:15 AM				07:30 AM			
+0 mins.	89	105	34	228	2	23	85	110	5	118	6	129	**55**	142	7	204
+15 mins.	85	**115**	39	239	1	32	78	111	**14**	131	6	151	49	136	7	192
+30 mins.	60	95	30	185	**7**	**55**	83	145	9	**143**	2	**154**	49	**148**	**10**	**207**
+45 mins.	**98**	105	**46**	**249**	2	54	**90**	**146**	9	132	**9**	150	34	104	8	146
Total Volume	332	420	149	901	12	164	336	512	37	524	23	584	187	530	32	749
% App. Total	36.8	46.6	16.5		2.3	32	65.6		6.3	89.7	3.9		25	70.8	4.3	
PHF	.847	.913	.810	.905	.429	.745	.933	.877	.661	.916	.639	.948	.850	.895	.800	.905

Counts Unlimited Inc.
PO Box 1178
Corona, CA 92878
(951) 268-6268

City of Riverside
N/S: Madison Street
E/W: Indiana Avenue
Weather: Sunny

File Name : RIVMAINAPM
Site Code : 11046662
Start Date : 3/29/2011
Page No : 1

Groups Printed- Total Volume

	Madison Street Southbound				Indiana Avenue Westbound				Madison Street Northbound				Indiana Avenue Eastbound				
Start Time	Left	Thru	Right	App. Total	Left	Thru	Right	App. Total	Left	Thru	Right	App. Total	Left	Thru	Right	App. Total	Int. Total
04:00 PM	63	127	28	218	9	62	84	155	12	102	4	118	46	86	14	146	637
04:15 PM	85	106	29	220	6	56	75	137	22	136	9	167	41	91	8	140	664
04:30 PM	61	131	29	221	15	74	87	176	16	106	5	127	51	108	20	179	703
04:45 PM	71	106	23	200	8	46	56	110	10	109	4	123	42	50	9	101	534
Total	280	470	109	859	38	238	302	578	60	453	22	535	180	335	51	566	2538
05:00 PM	53	128	23	204	26	63	52	141	14	102	4	120	65	80	14	159	624
05:15 PM	74	168	16	258	14	68	66	148	18	102	2	122	63	91	7	161	689
05:30 PM	62	126	25	213	12	58	57	127	8	144	8	160	52	79	16	147	647
05:45 PM	67	120	38	225	18	49	68	135	17	99	0	116	40	89	6	135	611
Total	256	542	102	900	70	238	243	551	57	447	14	518	220	339	43	602	2571
Grand Total	536	1012	211	1759	108	476	545	1129	117	900	36	1053	400	674	94	1168	5109
Apprch %	30.5	57.5	12		9.6	42.2	48.3		11.1	85.5	3.4		34.2	57.7	8		
Total %	10.5	19.8	4.1	34.4	2.1	9.3	10.7	22.1	2.3	17.6	0.7	20.6	7.8	13.2	1.8	22.9	

	Madison Street Southbound				Indiana Avenue Westbound				Madison Street Northbound				Indiana Avenue Eastbound				
Start Time	Left	Thru	Right	App. Total	Left	Thru	Right	App. Total	Left	Thru	Right	App. Total	Left	Thru	Right	App. Total	Int. Total
Peak Hour Analysis From 04:00 PM to 05:45 PM - Peak 1 of 1																	
Peak Hour for Entire Intersection Begins at 05:00 PM																	
05:00 PM	53	128	23	204	**26**	63	52	141	14	102	4	120	**65**	80	14	159	624
05:15 PM	**74**	**168**	16	**258**	14	**68**	66	**148**	**18**	102	2	122	63	**91**	7	**161**	**689**
05:30 PM	62	126	25	213	12	58	57	127	8	**144**	**8**	**160**	52	79	**16**	147	647
05:45 PM	67	120	**38**	225	18	49	**68**	135	17	99	0	116	40	89	6	135	611
Total Volume	256	542	102	900	70	238	243	551	57	447	14	518	220	339	43	602	2571
% App. Total	28.4	60.2	11.3		12.7	43.2	44.1		11	86.3	2.7		36.5	56.3	7.1		
PHF	.865	.807	.671	.872	.673	.875	.893	.931	.792	.776	.438	.809	.846	.931	.672	.935	.933

Counts Unlimited Inc.
PO Box 1178
Corona, CA 92878
(951) 268-6268

City of Riverside
N/S: Madison Street
E/W: Indiana Avenue
Weather: Sunny

File Name : RIVMAINAPM
Site Code : 11046662
Start Date : 3/29/2011
Page No : 2

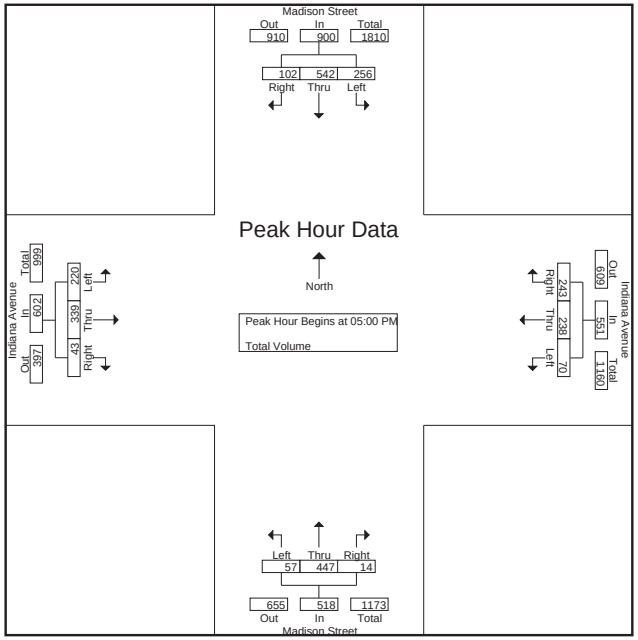

Peak Hour Analysis From 04:00 PM to 05:45 PM - Peak 1 of 1
Peak Hour for Each Approach Begins at:

	05:00 PM				04:00 PM				04:15 PM				05:00 PM			
+0 mins.	53	128	23	204	9	62	84	155	**22**	**136**	**9**	**167**	**65**	80	14	159
+15 mins.	**74**	**168**	16	**258**	6	56	75	137	16	106	5	127	63	**91**	7	**161**
+30 mins.	62	126	25	213	**15**	**74**	**87**	**176**	10	109	4	123	52	79	**16**	147
+45 mins.	67	120	**38**	225	8	46	56	110	14	102	4	120	40	89	6	135
Total Volume	256	542	102	900	38	238	302	578	62	453	22	537	220	339	43	602
% App. Total	28.4	60.2	11.3		6.6	41.2	52.2		11.5	84.4	4.1		36.5	56.3	7.1	
PHF	.865	.807	.671	.872	.633	.804	.868	.821	.705	.833	.611	.804	.846	.931	.672	.935

Counts Unlimited Inc.
PO Box 1178
Corona, CA 92878
(951) 268-6268

City of Riverside
N/S: Madison Street
E/W: Lincoln Avenue
Weather: Sunny

File Name : RIVMALIAM
Site Code : 1046083
Start Date : 3/30/2011
Page No : 1

Groups Printed- Total Volume

	Madison Street Southbound				Lincoln Avenue Westbound				Madison Street Northbound				Lincoln Avenue Eastbound				
Start Time	Left	Thru	Right	App. Total	Left	Thru	Right	App. Total	Left	Thru	Right	App. Total	Left	Thru	Right	App. Total	Int. Total
07:00 AM	20	24	12	56	2	28	18	48	4	39	2	45	16	49	4	69	218
07:15 AM	9	19	10	38	0	55	25	80	5	46	3	54	28	48	7	83	255
07:30 AM	13	34	26	73	1	52	25	78	4	44	6	54	21	62	1	84	289
07:45 AM	13	28	17	58	4	55	28	87	5	50	4	59	24	75	2	101	305
Total	55	105	65	225	7	190	96	293	18	179	15	212	89	234	14	337	1067
08:00 AM	20	28	19	67	0	49	26	75	2	33	0	35	19	39	2	60	237
08:15 AM	12	28	11	51	0	23	13	36	0	30	1	31	15	38	1	54	172
08:30 AM	17	32	10	59	0	21	20	41	3	34	1	38	18	26	2	46	184
08:45 AM	8	16	8	32	0	16	18	34	4	39	0	43	22	17	1	40	149
Total	57	104	48	209	0	109	77	186	9	136	2	147	74	120	6	200	742
Grand Total	112	209	113	434	7	299	173	479	27	315	17	359	163	354	20	537	1809
Apprch %	25.8	48.2	26		1.5	62.4	36.1		7.5	87.7	4.7		30.4	65.9	3.7		
Total %	6.2	11.6	6.2	24	0.4	16.5	9.6	26.5	1.5	17.4	0.9	19.8	9	19.6	1.1	29.7	

	Madison Street Southbound				Lincoln Avenue Westbound				Madison Street Northbound				Lincoln Avenue Eastbound				
Start Time	Left	Thru	Right	App. Total	Left	Thru	Right	App. Total	Left	Thru	Right	App. Total	Left	Thru	Right	App. Total	Int. Total
Peak Hour Analysis From 07:00 AM to 08:45 AM - Peak 1 of 1																	
Peak Hour for Entire Intersection Begins at 07:15 AM																	
07:15 AM	9	19	10	38	0	**55**	25	80	**5**	46	3	54	**28**	48	**7**	83	255
07:30 AM	13	**34**	**26**	**73**	1	52	25	78	4	44	**6**	54	21	62	1	84	289
07:45 AM	13	28	17	58	**4**	55	**28**	**87**	5	**50**	4	**59**	24	**75**	2	**101**	**305**
08:00 AM	**20**	28	19	67	0	49	26	75	2	33	0	35	19	39	2	60	237
Total Volume	55	109	72	236	5	211	104	320	16	173	13	202	92	224	12	328	1086
% App. Total	23.3	46.2	30.5		1.6	65.9	32.5		7.9	85.6	6.4		28	68.3	3.7		
PHF	.688	.801	.692	.808	.313	.959	.929	.920	.800	.865	.542	.856	.821	.747	.429	.812	.890

Counts Unlimited Inc.
PO Box 1178
Corona, CA 92878
(951) 268-6268

City of Riverside
N/S: Madison Street
E/W: Lincoln Avenue
Weather: Sunny

File Name : RIVMALIAM
Site Code : 1046083
Start Date : 3/30/2011
Page No : 2

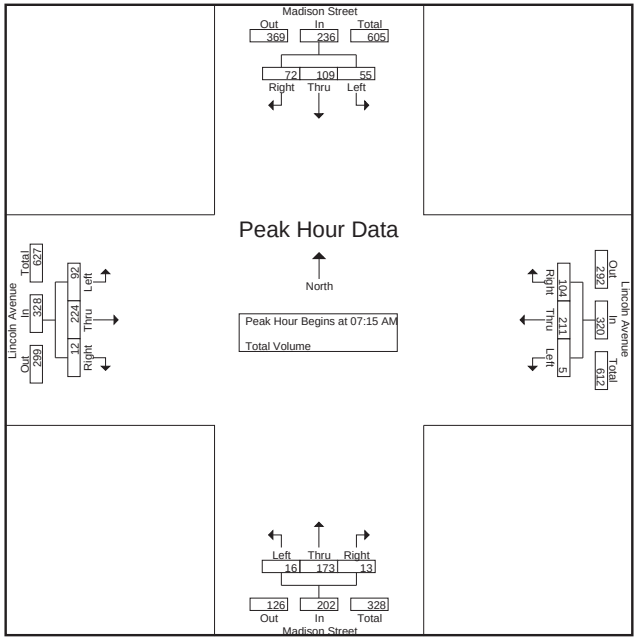

Peak Hour Analysis From 07:00 AM to 08:45 AM - Peak 1 of 1

Peak Hour for Each Approach Begins at:

	07:30 AM				07:15 AM				07:00 AM				07:00 AM			
0 mins.	13	**34**	**26**	**73**	0	**55**	25	80	4	39	2	45	16	49	4	69
15 mins.	13	28	17	58	1	52	25	78	**5**	46	3	54	**28**	48	**7**	83
30 mins.	**20**	28	19	67	**4**	55	**28**	**87**	4	44	**6**	54	21	62	1	84
45 mins.	12	28	11	51	0	49	26	75	5	**50**	4	**59**	24	**75**	2	**101**
Total Volume	58	118	73	249	5	211	104	320	18	179	15	212	89	234	14	337
% App. Total	23.3	47.4	29.3		1.6	65.9	32.5		8.5	84.4	7.1		26.4	69.4	4.2	
PHF	.725	.868	.702	.853	.313	.959	.929	.920	.900	.895	.625	.898	.795	.780	.500	.834

Counts Unlimited Inc.
PO Box 1178
Corona, CA 92878
(951) 268-6268

City of Riverside
N/S: Madison Street
E/W: Lincoln Avenue
Weather: Sunny

File Name : RIVMALIPM
Site Code : 11046011
Start Date : 3/30/2011
Page No : 1

Groups Printed- Total Volume

	Madison Street Southbound				Lincoln Avenue Westbound				Madison Street Northbound				Lincoln Avenue Eastbound				
Start Time	Left	Thru	Rght	App. Total	Left	Thru	Rght	App. Total	Left	Thru	Rght	App. Total	Left	Thru	Rght	App. Total	Int. Total
04:00 PM	23	49	16	88	2	37	26	65	2	29	1	32	32	60	4	96	281
04:15 PM	19	45	22	86	0	48	20	68	1	20	0	21	19	44	3	66	241
04:30 PM	22	60	19	101	1	27	23	51	2	32	0	34	24	46	3	73	259
04:45 PM	35	28	14	77	3	36	24	63	5	33	0	38	23	49	5	77	255
Total	99	182	71	352	6	148	93	247	10	114	1	125	98	199	15	312	1036
05:00 PM	20	65	25	110	3	29	23	55	3	32	0	35	29	50	6	85	285
05:15 PM	35	81	14	130	0	42	28	70	5	31	5	41	24	57	1	82	323
05:30 PM	23	59	22	104	6	47	28	81	3	28	2	33	19	58	5	82	300
05:45 PM	27	61	14	102	3	50	28	81	1	22	3	26	22	38	0	60	269
Total	105	266	75	446	12	168	107	287	12	113	10	135	94	203	12	309	1177
Grand Total	204	448	146	798	18	316	200	534	22	227	11	260	192	402	27	621	2213
Apprch %	25.6	56.1	18.3		3.4	59.2	37.5		8.5	87.3	4.2		30.9	64.7	4.3		
Total %	9.2	20.2	6.6	36.1	0.8	14.3	9	24.1	1	10.3	0.5	11.7	8.7	18.2	1.2	28.1	

	Madison Street Southbound				Lincoln Avenue Westbound				Madison Street Northbound				Lincoln Avenue Eastbound				
Start Time	Left	Thru	Rght	App. Total	Left	Thru	Rght	App. Total	Left	Thru	Rght	App. Total	Left	Thru	Rght	App. Total	Int. Total
Peak Hour Analysis From 04:00 PM to 05:45 PM - Peak 1 of 1																	
Peak Hour for Entire Intersection Begins at 05:00 PM																	
05:00 PM	20	65	**25**	110	3	29	23	55	3	**32**	0	35	**29**	50	**6**	**85**	285
05:15 PM	**35**	**81**	14	**130**	0	42	**28**	70	**5**	31	**5**	**41**	24	57	1	82	**323**
05:30 PM	23	59	22	104	**6**	47	28	**81**	3	28	2	33	19	**58**	5	82	300
05:45 PM	27	61	14	102	3	**50**	28	81	1	22	3	26	22	38	0	60	269
Total Volume	105	266	75	446	12	168	107	287	12	113	10	135	94	203	12	309	1177
% App. Total	23.5	59.6	16.8		4.2	58.5	37.3		8.9	83.7	7.4		30.4	65.7	3.9		
PHF	.750	.821	.750	.858	.500	.840	.955	.886	.600	.883	.500	.823	.810	.875	.500	.909	.911

Counts Unlimited Inc.
PO Box 1178
Corona, CA 92878
(951) 268-6268

City of Riverside
N/S: Madison Street
E/W: Lincoln Avenue
Weather: Sunny

File Name : RIVMALIPM
Site Code : 11046011
Start Date : 3/30/2011
Page No : 2

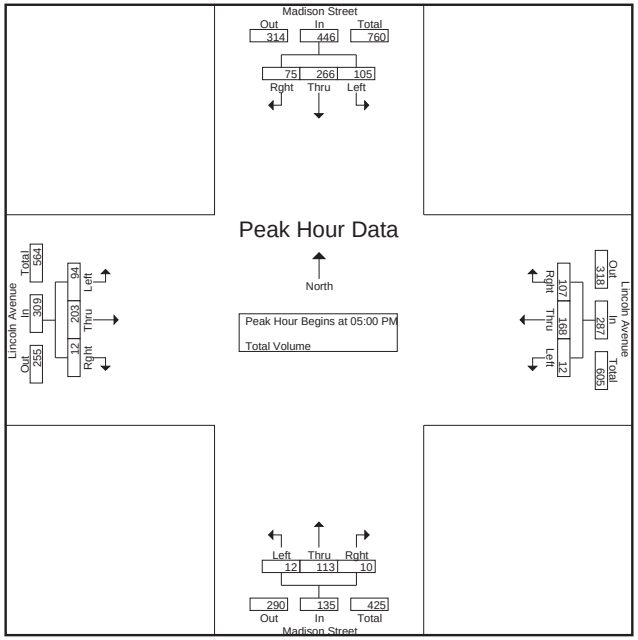

Peak Hour Analysis From 04:00 PM to 05:45 PM - Peak 1 of 1
Peak Hour for Each Approach Begins at:

	05:00 PM				05:00 PM				04:30 PM				04:45 PM			
+0 mins.	20	65	**25**	110	3	29	23	55	2	32	0	34	23	49	5	77
+15 mins.	**35**	**81**	14	**130**	0	42	**28**	70	**5**	**33**	0	38	**29**	50	**6**	**85**
+30 mins.	23	59	22	104	**6**	47	28	**81**	3	32	0	35	24	57	1	82
+45 mins.	27	61	14	102	3	**50**	28	81	5	31	**5**	**41**	19	**58**	5	82
Total Volume	105	266	75	446	12	168	107	287	15	128	5	148	95	214	17	326
% App. Total	23.5	59.6	16.8		4.2	58.5	37.3		10.1	86.5	3.4		29.1	65.6	5.2	
PHF	.750	.821	.750	.858	.500	.840	.955	.886	.750	.970	.250	.902	.819	.922	.708	.959

Counts Unlimited Inc.
PO Box 1178
Corona, CA 92878
(951) 268-6268

City of Riverside
N/S: Madison Street
E/W: Victoria Avenue
Weather: Sunny

File Name : RIVMAVIAM
Site Code : 11046097
Start Date : 3/30/2011
Page No : 1

Groups Printed- Total Volume

	Madison Street Southbound				Victoria Avenue Westbound				Madison Street Northbound				Victoria Avenue Eastbound				
Start Time	Left	Thru	Right	App. Total	Left	Thru	Right	App. Total	Left	Thru	Right	App. Total	Left	Thru	Right	App. Total	Int. Total
07:00 AM	21	5	4	30	1	35	20	56	3	4	2	9	5	39	1	45	140
07:15 AM	10	7	4	21	0	59	27	86	0	15	5	20	10	50	1	61	188
07:30 AM	20	6	6	32	0	73	29	102	4	8	0	12	13	73	2	88	234
07:45 AM	11	9	6	26	0	88	34	122	4	8	5	17	10	60	1	71	236
Total	62	27	20	109	1	255	110	366	11	35	12	58	38	222	5	265	798
08:00 AM	19	10	8	37	2	57	27	86	3	6	4	13	9	63	1	73	209
08:15 AM	12	5	3	20	1	62	14	77	0	7	0	7	7	77	1	85	189
08:30 AM	16	6	5	27	2	32	18	52	0	11	3	14	13	38	1	52	145
08:45 AM	21	6	4	31	0	40	20	60	1	7	2	10	8	34	1	43	144
Total	68	27	20	115	5	191	79	275	4	31	9	44	37	212	4	253	687
Grand Total	130	54	40	224	6	446	189	641	15	66	21	102	75	434	9	518	1485
Apprch %	58	24.1	17.9		0.9	69.6	29.5		14.7	64.7	20.6		14.5	83.8	1.7		
Total %	8.8	3.6	2.7	15.1	0.4	30	12.7	43.2	1	4.4	1.4	6.9	5.1	29.2	0.6	34.9	

	Madison Street Southbound				Victoria Avenue Westbound				Madison Street Northbound				Victoria Avenue Eastbound				
Start Time	Left	Thru	Right	App. Total	Left	Thru	Right	App. Total	Left	Thru	Right	App. Total	Left	Thru	Right	App. Total	Int. Total
Peak Hour Analysis From 07:00 AM to 08:45 AM - Peak 1 of 1																	
Peak Hour for Entire Intersection Begins at 07:30 AM																	
07:30 AM	**20**	6	6	32	0	73	29	102	**4**	**8**	0	12	**13**	73	**2**	**88**	234
07:45 AM	11	9	6	26	0	**88**	**34**	**122**	4	8	**5**	**17**	10	60	1	71	**236**
08:00 AM	19	**10**	**8**	**37**	**2**	57	27	86	3	6	4	13	9	63	1	73	209
08:15 AM	12	5	3	20	1	62	14	77	0	7	0	7	7	**77**	1	85	189
Total Volume	62	30	23	115	3	280	104	387	11	29	9	49	39	273	5	317	868
% App. Total	53.9	26.1	20		0.8	72.4	26.9		22.4	59.2	18.4		12.3	86.1	1.6		
PHF	.775	.750	.719	.777	.375	.795	.765	.793	.688	.906	.450	.721	.750	.886	.625	.901	.919

Counts Unlimited Inc.
PO Box 1178
Corona, CA 92878
(951) 268-6268

City of Riverside
N/S: Madison Street
E/W: Victoria Avenue
Weather: Sunny

File Name : RIVMAVIAM
Site Code : 11046097
Start Date : 3/30/2011
Page No : 2

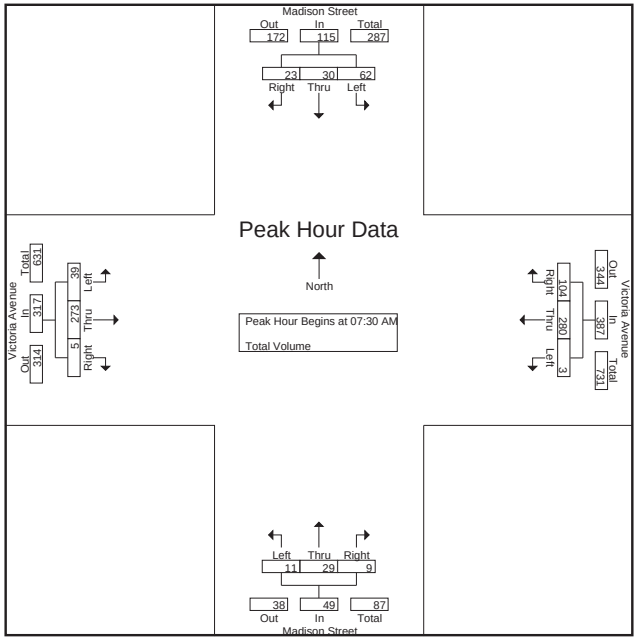

Peak Hour Analysis From 07:00 AM to 08:45 AM - Peak 1 of 1

Peak Hour for Each Approach Begins at:

	07:15 AM				07:15 AM				07:15 AM				07:30 AM			
0 mins.	10	7	4	21	0	59	27	86	0	**15**	**5**	**20**	**13**	73	**2**	**88**
15 mins.	**20**	6	6	32	0	73	29	102	**4**	8	0	12	10	60	1	71
30 mins.	11	9	6	26	0	**88**	**34**	**122**	4	8	5	17	9	63	1	73
45 mins.	19	**10**	**8**	**37**	**2**	57	27	86	3	6	4	13	7	**77**	1	85
Total Volume	60	32	24	116	2	277	117	396	11	37	14	62	39	273	5	317
% App. Total	51.7	27.6	20.7		0.5	69.9	29.5		17.7	59.7	22.6		12.3	86.1	1.6	
PHF	.750	.800	.750	.784	.250	.787	.860	.811	.688	.617	.700	.775	.750	.886	.625	.901

Counts Unlimited Inc.
PO Box 1178
Corona, CA 92878
(951) 268-6268

City of Riverside
N/S: Madison Street
E/W: Victoria Avenue
Weather: Sunny

File Name : RIVMAVIPM
Site Code : 11046097
Start Date : 3/30/2011
Page No : 1

Groups Printed- Total Volume

	Madison Street Southbound				Victoria Avenue Westbound				Madison Street Northbound				Victoria Avenue Eastbound				
Start Time	Left	Thru	Right	App. Total	Left	Thru	Right	App. Total	Left	Thru	Right	App. Total	Left	Thru	Right	App. Total	Int. Total
04:00 PM	28	18	10	56	0	38	17	55	1	7	2	10	7	67	3	77	198
04:15 PM	28	12	6	46	4	56	12	72	1	1	2	4	3	57	0	60	182
04:30 PM	32	13	10	55	2	64	12	78	0	10	2	12	6	52	4	62	207
04:45 PM	21	9	4	34	0	45	22	67	2	9	1	12	4	81	4	89	202
Total	109	52	30	191	6	203	63	272	4	27	7	38	20	257	11	288	789
05:00 PM	42	22	5	69	0	47	20	67	0	8	2	10	8	52	2	62	208
05:15 PM	39	24	10	73	6	45	14	65	3	10	1	14	7	93	5	105	257
05:30 PM	33	19	15	67	0	64	15	79	2	5	0	7	10	66	5	81	234
05:45 PM	39	16	8	63	1	69	12	82	5	2	1	8	4	58	1	63	216
Total	153	81	38	272	7	225	61	293	10	25	4	39	29	269	13	311	915
Grand Total	262	133	68	463	13	428	124	565	14	52	11	77	49	526	24	599	1704
Apprch %	56.6	28.7	14.7		2.3	75.8	21.9		18.2	67.5	14.3		8.2	87.8	4		
Total %	15.4	7.8	4	27.2	0.8	25.1	7.3	33.2	0.8	3.1	0.6	4.5	2.9	30.9	1.4	35.2	

	Madison Street Southbound				Victoria Avenue Westbound				Madison Street Northbound				Victoria Avenue Eastbound				
Start Time	Left	Thru	Right	App. Total	Left	Thru	Right	App. Total	Left	Thru	Right	App. Total	Left	Thru	Right	App. Total	Int. Total
Peak Hour Analysis From 04:00 PM to 05:45 PM - Peak 1 of 1																	
Peak Hour for Entire Intersection Begins at 05:00 PM																	
05:00 PM	**42**	22	5	69	0	47	**20**	67	0	8	**2**	10	8	52	2	62	208
05:15 PM	39	**24**	10	**73**	**6**	45	14	65	3	**10**	1	**14**	7	**93**	**5**	**105**	**257**
05:30 PM	33	19	**15**	67	0	64	15	79	2	5	0	7	**10**	66	5	81	234
05:45 PM	39	16	8	63	1	**69**	12	**82**	**5**	2	1	8	4	58	1	63	216
Total Volume	153	81	38	272	7	225	61	293	10	25	4	39	29	269	13	311	915
% App. Total	56.2	29.8	14		2.4	76.8	20.8		25.6	64.1	10.3		9.3	86.5	4.2		
PHF	.911	.844	.633	.932	.292	.815	.763	.893	.500	.625	.500	.696	.725	.723	.650	.740	.890

Counts Unlimited Inc.
PO Box 1178
Corona, CA 92878
(951) 268-6268

City of Riverside
N/S: Madison Street
E/W: Victoria Avenue
Weather: Sunny

File Name : RIVMAVIPM
Site Code : 11046097
Start Date : 3/30/2011
Page No : 2

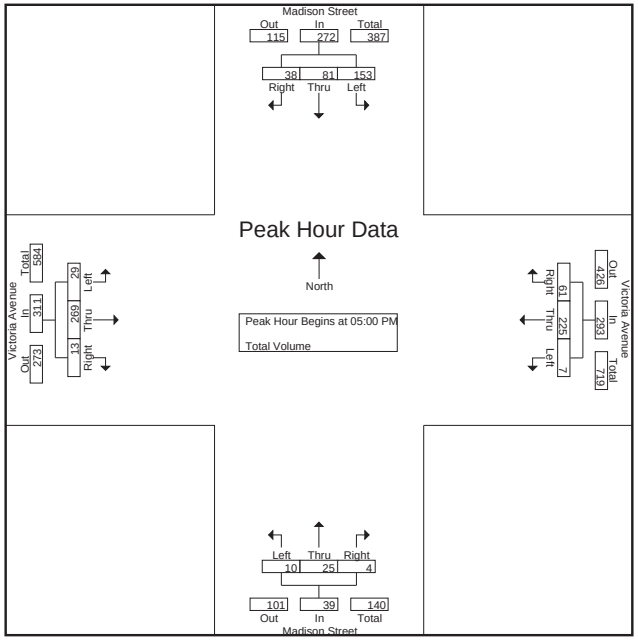

Peak Hour Analysis From 04:00 PM to 05:45 PM - Peak 1 of 1

Peak Hour for Each Approach Begins at:

	05:00 PM				05:00 PM				04:30 PM				04:45 PM			
0 mins.	**42**	22	5	69	0	47	**20**	67	0	**10**	**2**	12	4	81	4	89
15 mins.	39	**24**	10	**73**	**6**	45	14	65	2	9	1	12	8	52	2	62
30 mins.	33	19	**15**	67	0	64	15	79	0	8	2	10	7	**93**	**5**	**105**
45 mins.	39	16	8	63	1	**69**	12	**82**	**3**	10	1	**14**	**10**	66	5	81
Total Volume	153	81	38	272	7	225	61	293	5	37	6	48	29	292	16	337
% App. Total	56.2	29.8	14		2.4	76.8	20.8		10.4	77.1	12.5		8.6	86.6	4.7	
PHF	.911	.844	.633	.932	.292	.815	.763	.893	.417	.925	.750	.857	.725	.785	.800	.802

Counts Unlimited Inc.
PO Box 1178
Corona, CA 92878
(951) 268-6268

City of Riverside
N/S: Washington Street
E/W: Indian Avenue
Weather Sunny

File Name : RIVWAINAM
Site Code : 11046139
Start Date : 3/30/2011
Page No : 1

Groups Printed- Total Volume

	Washington Street Southbound				Indiana Avenue Westbound				Washington Street Northbound				Indiana Avenue Eastbound				
Start Time	Left	Thru	Right	App. Total	Left	Thru	Right	App. Total	Left	Thru	Right	App. Total	Left	Thru	Right	App. Total	Int. Total
07:00 AM	0	0	0	0	20	39	2	61	53	1	53	107	1	59	18	78	246
07:15 AM	0	0	0	0	18	73	1	92	67	2	84	153	1	115	15	131	376
07:30 AM	1	0	1	2	14	87	3	104	68	1	83	152	0	188	24	212	470
07:45 AM	0	0	0	0	11	83	1	95	53	0	88	141	2	195	21	218	454
Total	1	0	1	2	63	282	7	352	241	4	308	553	4	557	78	639	1546
08:00 AM	1	1	1	3	23	86	5	114	52	1	81	134	2	182	33	217	468
08:15 AM	0	0	0	0	20	80	3	103	60	1	69	130	4	186	21	211	444
08:30 AM	1	0	0	1	16	73	4	93	69	0	59	128	7	139	20	166	388
08:45 AM	0	0	0	0	12	84	7	103	44	1	64	109	2	145	18	165	377
Total	2	1	1	4	71	323	19	413	225	3	273	501	15	652	92	759	1677
Grand Total	3	1	2	6	134	605	26	765	466	7	581	1054	19	1209	170	1398	3223
Apprch %	50	16.7	33.3		17.5	79.1	3.4		44.2	0.7	55.1		1.4	86.5	12.2		
Total %	0.1	0	0.1	0.2	4.2	18.8	0.8	23.7	14.5	0.2	18	32.7	0.6	37.5	5.3	43.4	

	Washington Street Southbound				Indiana Avenue Westbound				Washington Street Northbound				Indiana Avenue Eastbound				
Start Time	Left	Thru	Right	App. Total	Left	Thru	Right	App. Total	Left	Thru	Right	App. Total	Left	Thru	Right	App. Total	Int. Total
Peak Hour Analysis From 07:00 AM to 08:45 AM - Peak 1 of 1																	
Peak Hour for Entire Intersection Begins at 07:30 AM																	
07:30 AM	**1**	0	**1**	2	14	**87**	3	104	**68**	**1**	83	**152**	0	188	24	212	**470**
07:45 AM	0	0	0	0	11	83	1	95	53	0	**88**	141	2	**195**	21	**218**	454
08:00 AM	1	**1**	1	**3**	**23**	86	**5**	**114**	52	1	81	134	2	182	**33**	217	468
08:15 AM	0	0	0	0	20	80	3	103	60	1	69	130	**4**	186	21	211	444
Total Volume	2	1	2	5	68	336	12	416	233	3	321	557	8	751	99	858	1836
% App. Total	40	20	40		16.3	80.8	2.9		41.8	0.5	57.6		0.9	87.5	11.5		
PHF	.500	.250	.500	.417	.739	.966	.600	.912	.857	.750	.912	.916	.500	.963	.750	.984	.977

Counts Unlimited Inc.
PO Box 1178
Corona, CA 92878
(951) 268-6268

City of Riverside
N/S: Washington Street
E/W: Indian Avenue
Weather Sunny

File Name : RIVWAINAM
Site Code : 11046139
Start Date : 3/30/2011
Page No : 2

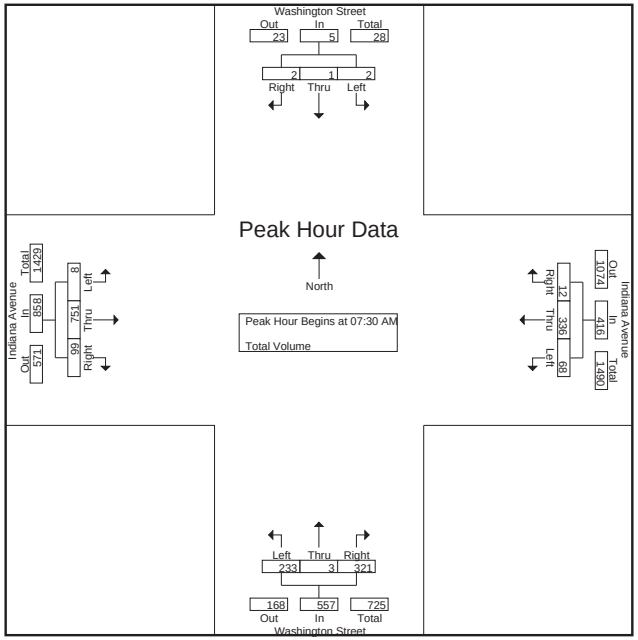

Peak Hour Analysis From 07:00 AM to 08:45 AM - Peak 1 of 1

Peak Hour for Each Approach Begins at:

	07:15 AM				07:30 AM				07:15 AM				07:30 AM			
0 mins.	0	0	0	0	14	**87**	3	104	67	**2**	84	**153**	0	188	24	212
15 mins.	**1**	0	**1**	2	11	83	1	95	**68**	1	83	152	2	**195**	21	**218**
30 mins.	0	0	0	0	**23**	86	**5**	**114**	53	0	**88**	141	2	182	**33**	217
45 mins.	1	**1**	1	**3**	20	80	3	103	52	1	81	134	**4**	186	21	211
Total Volume	2	1	2	5	68	336	12	416	240	4	336	580	8	751	99	858
% App. Total	40	20	40		16.3	80.8	2.9		41.4	0.7	57.9		0.9	87.5	11.5	
PHF	.500	.250	.500	.417	.739	.966	.600	.912	.882	.500	.955	.948	.500	.963	.750	.984

Counts Unlimited Inc.
PO Box 1178
Corona, CA 92878
(951) 268-6268

City of Riverside
N/S: Washington Street
E/W: Indian Avenue
Weather Sunny

File Name : RIVWAINPM
Site Code : 11046139
Start Date : 3/30/2011
Page No : 1

Groups Printed- Total Volume

	Washington Street Southbound				Indiana Avenue Westbound				Washington Street Northbound				Indiana Avenue Eastbound				
Start Time	Left	Thru	Right	App. Total	Left	Thru	Right	App. Total	Left	Thru	Right	App. Total	Left	Thru	Right	App. Total	Int. Total
04:00 PM	5	2	2	9	32	111	3	146	47	0	39	86	2	120	51	173	414
04:15 PM	2	1	2	5	41	97	1	139	36	0	36	72	1	108	46	155	371
04:30 PM	2	0	1	3	40	101	0	141	47	0	44	91	0	101	31	132	367
04:45 PM	1	0	3	4	45	101	1	147	45	0	31	76	1	95	41	137	364
Total	10	3	8	21	158	410	5	573	175	0	150	325	4	424	169	597	1516
05:00 PM	7	1	8	16	39	140	0	179	38	2	40	80	1	140	30	171	446
05:15 PM	1	3	4	8	45	111	0	156	42	0	37	79	0	112	31	143	386
05:30 PM	4	0	0	4	39	126	0	165	43	0	30	73	0	125	45	170	412
05:45 PM	1	0	0	1	46	119	0	165	26	0	28	54	0	96	28	124	344
Total	13	4	12	29	169	496	0	665	149	2	135	286	1	473	134	608	1588
Grand Total	23	7	20	50	327	906	5	1238	324	2	285	611	5	897	303	1205	3104
Apprch %	46	14	40		26.4	73.2	0.4		53	0.3	46.6		0.4	74.4	25.1		
Total %	0.7	0.2	0.6	1.6	10.5	29.2	0.2	39.9	10.4	0.1	9.2	19.7	0.2	28.9	9.8	38.8	

	Washington Street Southbound				Indiana Avenue Westbound				Washington Street Northbound				Indiana Avenue Eastbound				
Start Time	Left	Thru	Right	App. Total	Left	Thru	Right	App. Total	Left	Thru	Right	App. Total	Left	Thru	Right	App. Total	Int. Total
Peak Hour Analysis From 04:00 PM to 05:45 PM - Peak 1 of 1																	
Peak Hour for Entire Intersection Begins at 04:45 PM																	
04:45 PM	1	0	3	4	**45**	101	**1**	147	**45**	0	31	76	**1**	95	41	137	364
05:00 PM	**7**	1	**8**	**16**	39	**140**	0	**179**	38	**2**	**40**	**80**	1	**140**	30	**171**	**446**
05:15 PM	1	**3**	4	8	45	111	0	156	42	0	37	79	0	112	31	143	386
05:30 PM	4	0	0	4	39	126	0	165	43	0	30	73	0	125	**45**	170	412
Total Volume	13	4	15	32	168	478	1	647	168	2	138	308	2	472	147	621	1608
% App. Total	40.6	12.5	46.9		26	73.9	0.2		54.5	0.6	44.8		0.3	76	23.7		
PHF	.464	.333	.469	.500	.933	.854	.250	.904	.933	.250	.863	.963	.500	.843	.817	.908	.901

Counts Unlimited Inc.
PO Box 1178
Corona, CA 92878
(951) 268-6268

City of Riverside
N/S: Washington Street
E/W: Indian Avenue
Weather Sunny

File Name : RIVWAINPM
Site Code : 11046139
Start Date : 3/30/2011
Page No : 2

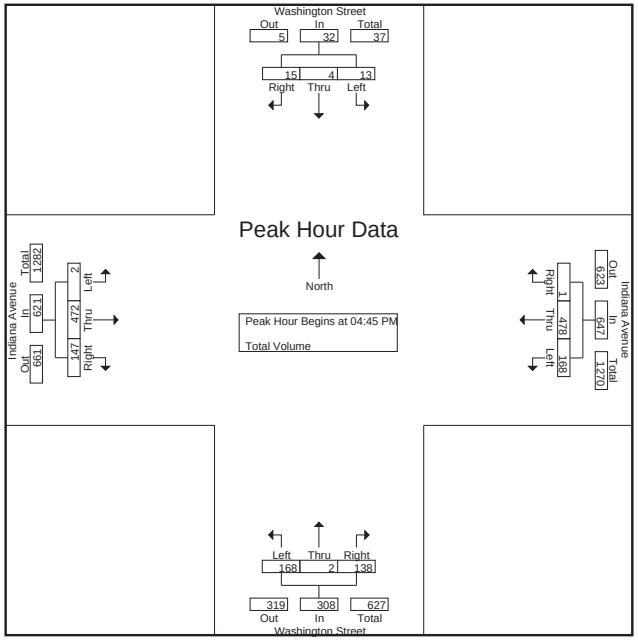

Peak Hour Analysis From 04:00 PM to 05:45 PM - Peak 1 of 1

Peak Hour for Each Approach Begins at:

	04:45 PM				05:00 PM				04:30 PM				04:45 PM			
0 mins.	1	0	3	4	39	**140**	0	**179**	**47**	0	**44**	**91**	**1**	95	41	137
15 mins.	**7**	1	**8**	**16**	45	111	0	156	45	0	31	76	1	**140**	30	**171**
30 mins.	1	**3**	4	8	39	126	0	165	38	**2**	40	80	0	112	31	143
45 mins.	4	0	0	4	**46**	119	0	165	42	0	37	79	0	125	**45**	170
Total Volume	13	4	15	32	169	496	0	665	172	2	152	326	2	472	147	621
% App. Total	40.6	12.5	46.9		25.4	74.6	0		52.8	0.6	46.6		0.3	76	23.7	
PHF	.464	.333	.469	.500	.918	.886	.000	.929	.915	.250	.864	.896	.500	.843	.817	.908

Counts Unlimited Inc.
PO Box 1178
Corona, CA 92878
(951) 268-6268

City of Riverside
N/S: Washington Street
E/W: Lincoln Avenue
Weather: Sunny

File Name : RIVWALIAM
Site Code : 11046011
Start Date : 3/30/2011
Page No : 1

Groups Printed- Total Volume

	Washington Street Southbound				Lincoln Avenue Westbound				Washington Street Northbound				Lincoln Avenue Eastbound				
Start Time	Left	Thru	Rght	App. Total	Left	Thru	Rght	App. Total	Left	Thru	Rght	App. Total	Left	Thru	Rght	App. Total	Int. Total
07:00 AM	8	36	1	45	2	24	12	38	3	85	10	98	7	43	2	52	233
07:15 AM	10	20	7	37	10	49	18	77	2	122	3	127	5	63	1	69	310
07:30 AM	18	27	7	52	5	60	12	77	0	124	6	130	4	72	2	78	337
07:45 AM	16	28	7	51	4	66	23	93	3	110	9	122	5	82	1	88	354
Total	52	111	22	185	21	199	65	285	8	441	28	477	21	260	6	287	1234
08:00 AM	5	32	4	41	10	66	15	91	5	106	6	117	1	59	0	60	309
08:15 AM	3	28	4	35	4	25	9	38	4	104	12	120	6	41	1	48	241
08:30 AM	6	26	5	37	3	25	8	36	4	105	7	116	1	35	2	38	227
08:45 AM	3	18	5	26	2	19	8	29	3	84	4	91	1	23	1	25	171
Total	17	104	18	139	19	135	40	194	16	399	29	444	9	158	4	171	948
Grand Total	69	215	40	324	40	334	105	479	24	840	57	921	30	418	10	458	2182
Apprch %	21.3	66.4	12.3		8.4	69.7	21.9		2.6	91.2	6.2		6.6	91.3	2.2		
Total %	3.2	9.9	1.8	14.8	1.8	15.3	4.8	22	1.1	38.5	2.6	42.2	1.4	19.2	0.5	21	

	Washington Street Southbound				Lincoln Avenue Westbound				Washington Street Northbound				Lincoln Avenue Eastbound				
Start Time	Left	Thru	Rght	App. Total	Left	Thru	Rght	App. Total	Left	Thru	Rght	App. Total	Left	Thru	Rght	App. Total	Int. Total
Peak Hour Analysis From 07:00 AM to 08:45 AM - Peak 1 of 1																	
Peak Hour for Entire Intersection Begins at 07:15 AM																	
07:15 AM	10	20	**7**	37	**10**	49	18	77	2	122	3	127	**5**	63	1	69	310
07:30 AM	**18**	27	7	**52**	5	60	12	77	0	**124**	6	**130**	4	72	**2**	78	337
07:45 AM	16	28	7	51	4	**66**	**23**	**93**	3	110	**9**	122	5	**82**	1	**88**	**354**
08:00 AM	5	**32**	4	41	10	66	15	91	**5**	106	6	117	1	59	0	60	309
Total Volume	49	107	25	181	29	241	68	338	10	462	24	496	15	276	4	295	1310
% App. Total	27.1	59.1	13.8		8.6	71.3	20.1		2	93.1	4.8		5.1	93.6	1.4		
PHF	.681	.836	.893	.870	.725	.913	.739	.909	.500	.931	.667	.954	.750	.841	.500	.838	.925

Counts Unlimited Inc.
PO Box 1178
Corona, CA 92878
(951) 268-6268

City of Riverside
N/S: Washington Street
E/W: Lincoln Avenue
Weather: Sunny

File Name : RIVWALIAM
Site Code : 11046011
Start Date : 3/30/2011
Page No : 2

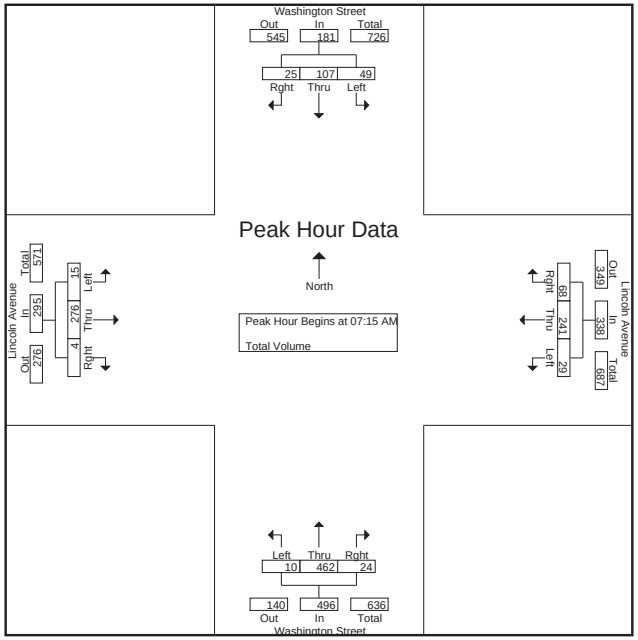

Peak Hour Analysis From 07:00 AM to 08:45 AM - Peak 1 of 1
Peak Hour for Each Approach Begins at:

	07:00 AM				07:15 AM				07:15 AM				07:15 AM			
+0 mins.	8	**36**	1	45	**10**	49	18	77	2	122	3	127	**5**	63	1	69
+15 mins.	10	20	**7**	37	5	60	12	77	0	**124**	6	**130**	4	72	**2**	78
+30 mins.	**18**	27	7	**52**	4	**66**	**23**	**93**	3	110	**9**	122	5	**82**	1	**88**
+45 mins.	16	28	7	51	10	66	15	91	**5**	106	6	117	1	59	0	60
Total Volume	52	111	22	185	29	241	68	338	10	462	24	496	15	276	4	295
% App. Total	28.1	60	11.9		8.6	71.3	20.1		2	93.1	4.8		5.1	93.6	1.4	
PHF	.722	.771	.786	.889	.725	.913	.739	.909	.500	.931	.667	.954	.750	.841	.500	.838

Counts Unlimited Inc.
PO Box 1178
Corona, CA 92878
(951) 268-6268

City of Riverside
N/S: Washington Street
E/W: Lincoln Avenue
Weather: Sunny

File Name : RIVWALIPM
Site Code : 11046011
Start Date : 3/30/2011
Page No : 1

Groups Printed- Total Volume

	Washington Street Southbound				Lincoln Avenue Westbound				Washington Street Northbound				Lincoln Avenue Eastbound				
Start Time	Left	Thru	Rght	App. Total	Left	Thru	Rght	App. Total	Left	Thru	Rght	App. Total	Left	Thru	Rght	App. Total	Int. Total
04:00 PM	22	64	5	91	3	56	15	74	5	46	10	61	5	67	4	76	302
04:15 PM	9	71	9	89	11	48	8	67	7	61	4	72	1	57	5	63	291
04:30 PM	25	57	4	86	6	48	9	63	5	48	6	59	3	53	5	61	269
04:45 PM	14	60	3	77	8	48	15	71	7	52	4	63	5	72	3	80	291
Total	70	252	21	343	28	200	47	275	24	207	24	255	14	249	17	280	1153
05:00 PM	17	53	7	77	9	34	13	56	5	52	2	59	3	58	5	66	258
05:15 PM	15	65	6	86	8	52	16	76	4	49	3	56	3	75	8	86	304
05:30 PM	14	66	6	86	7	67	16	90	6	57	4	67	3	67	6	76	319
05:45 PM	9	57	2	68	9	64	17	90	4	43	1	48	4	45	6	55	261
Total	55	241	21	317	33	217	62	312	19	201	10	230	13	245	25	283	1142
Grand Total	125	493	42	660	61	417	109	587	43	408	34	485	27	494	42	563	2295
Apprch %	18.9	74.7	6.4		10.4	71	18.6		8.9	84.1	7		4.8	87.7	7.5		
Total %	5.4	21.5	1.8	28.8	2.7	18.2	4.7	25.6	1.9	17.8	1.5	21.1	1.2	21.5	1.8	24.5	

	Washington Street Southbound				Lincoln Avenue Westbound				Washington Street Northbound				Lincoln Avenue Eastbound				
Start Time	Left	Thru	Rght	App. Total	Left	Thru	Rght	App. Total	Left	Thru	Rght	App. Total	Left	Thru	Rght	App. Total	Int. Total
Peak Hour Analysis From 04:00 PM to 05:45 PM - Peak 1 of 1																	
Peak Hour for Entire Intersection Begins at 04:45 PM																	
04:45 PM	14	60	3	77	8	48	15	71	**7**	52	**4**	63	**5**	72	3	80	291
05:00 PM	**17**	53	**7**	77	**9**	34	13	56	5	52	2	59	3	58	5	66	258
05:15 PM	15	65	6	**86**	8	52	**16**	76	4	49	3	56	3	**75**	**8**	**86**	304
05:30 PM	14	**66**	6	86	7	**67**	16	**90**	6	**57**	4	**67**	3	67	6	76	**319**
Total Volume	60	244	22	326	32	201	60	293	22	210	13	245	14	272	22	308	1172
% App. Total	18.4	74.8	6.7		10.9	68.6	20.5		9	85.7	5.3		4.5	88.3	7.1		
PHF	.882	.924	.786	.948	.889	.750	.938	.814	.786	.921	.813	.914	.700	.907	.688	.895	.918

Counts Unlimited Inc.
PO Box 1178
Corona, CA 92878
(951) 268-6268

City of Riverside
N/S: Washington Street
E/W: Lincoln Avenue
Weather: Sunny

File Name : RIVWALIPM
Site Code : 11046011
Start Date : 3/30/2011
Page No : 2

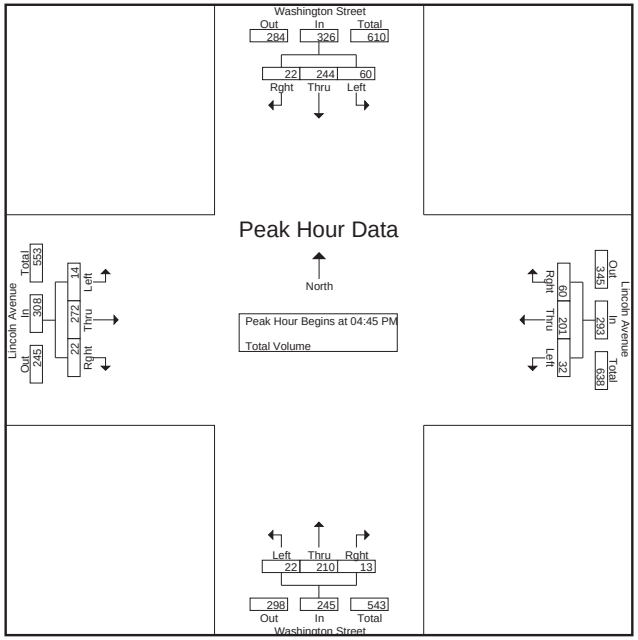

Peak Hour Analysis From 04:00 PM to 05:45 PM - Peak 1 of 1
Peak Hour for Each Approach Begins at:

	04:00 PM				05:00 PM				04:00 PM				04:45 PM			
+0 mins.	22	64	5	**91**	**9**	34	13	56	5	46	**10**	61	**5**	72	3	80
+15 mins.	9	**71**	**9**	89	8	52	16	76	**7**	**61**	4	**72**	3	58	5	66
+30 mins.	**25**	57	4	86	7	**67**	16	**90**	5	48	6	59	3	**75**	**8**	**86**
+45 mins.	14	60	3	77	9	64	**17**	90	7	52	4	63	3	67	6	76
Total Volume	70	252	21	343	33	217	62	312	24	207	24	255	14	272	22	308
% App. Total	20.4	73.5	6.1		10.6	69.6	19.9		9.4	81.2	9.4		4.5	88.3	7.1	
PHF	.700	.887	.583	.942	.917	.810	.912	.867	.857	.848	.600	.885	.700	.907	.688	.895

Counts Unlimited Inc.
PO Box 1178
Corona, CA 92878
(951) 268-6268

City of Riverside
N/S: Washington Street
E/W: Victoria Avenue
Weather: Sunny

File Name : RIVWAVIAM
Site Code : 11046028
Start Date : 3/30/2011
Page No : 1

Groups Printed- Total Volume

	Washington Street Southbound				Victoria Avenue Westbound				Washington Street Northbound				Victoria Avenue Eastbound				
Start Time	Left	Thru	Right	App. Total	Left	Thru	Right	App. Total	Left	Thru	Right	App. Total	Left	Thru	Right	App. Total	Int. Total
07:00 AM	4	37	1	42	17	33	2	52	18	95	84	197	0	37	22	59	350
07:15 AM	2	30	1	33	24	58	2	84	35	134	127	296	2	43	19	64	477
07:30 AM	3	30	2	35	27	57	3	87	39	134	114	287	1	73	21	95	504
07:45 AM	5	31	2	38	41	68	8	117	44	135	126	305	2	54	13	69	529
Total	14	128	6	148	109	216	15	340	136	498	451	1085	5	207	75	287	1860
08:00 AM	3	34	0	37	31	51	6	88	35	104	98	237	1	59	21	81	443
08:15 AM	2	30	3	35	38	40	6	84	31	105	77	213	3	72	20	95	427
08:30 AM	2	30	0	32	36	26	6	68	23	111	83	217	0	39	20	59	376
08:45 AM	0	19	0	19	36	23	3	62	34	85	64	183	0	35	22	57	321
Total	7	113	3	123	141	140	21	302	123	405	322	850	4	205	83	292	1567
Grand Total	21	241	9	271	250	356	36	642	259	903	773	1935	9	412	158	579	3427
Apprch %	7.7	88.9	3.3		38.9	55.5	5.6		13.4	46.7	39.9		1.6	71.2	27.3		
Total %	0.6	7	0.3	7.9	7.3	10.4	1.1	18.7	7.6	26.3	22.6	56.5	0.3	12	4.6	16.9	

	Washington Street Southbound				Victoria Avenue Westbound				Washington Street Northbound				Victoria Avenue Eastbound				
Start Time	Left	Thru	Right	App. Total	Left	Thru	Right	App. Total	Left	Thru	Right	App. Total	Left	Thru	Right	App. Total	Int. Total
Peak Hour Analysis From 07:00 AM to 08:45 AM - Peak 1 of 1																	
Peak Hour for Entire Intersection Begins at 07:15 AM																	
07:15 AM	2	30	1	33	24	58	2	84	35	134	**127**	296	**2**	43	19	64	477
07:30 AM	3	30	**2**	35	27	57	3	87	39	134	114	287	1	**73**	**21**	**95**	504
07:45 AM	**5**	31	2	**38**	**41**	**68**	**8**	**117**	**44**	**135**	126	**305**	2	54	13	69	**529**
08:00 AM	3	**34**	0	37	31	51	6	88	35	104	98	237	1	59	21	81	443
Total Volume	13	125	5	143	123	234	19	376	153	507	465	1125	6	229	74	309	1953
% App. Total	9.1	87.4	3.5		32.7	62.2	5.1		13.6	45.1	41.3		1.9	74.1	23.9		
PHF	.650	.919	.625	.941	.750	.860	.594	.803	.869	.939	.915	.922	.750	.784	.881	.813	.923

Counts Unlimited Inc.
PO Box 1178
Corona, CA 92878
(951) 268-6268

City of Riverside
N/S: Washington Street
E/W: Victoria Avenue
Weather: Sunny

File Name : RIVWAVIAM
Site Code : 11046028
Start Date : 3/30/2011
Page No : 2

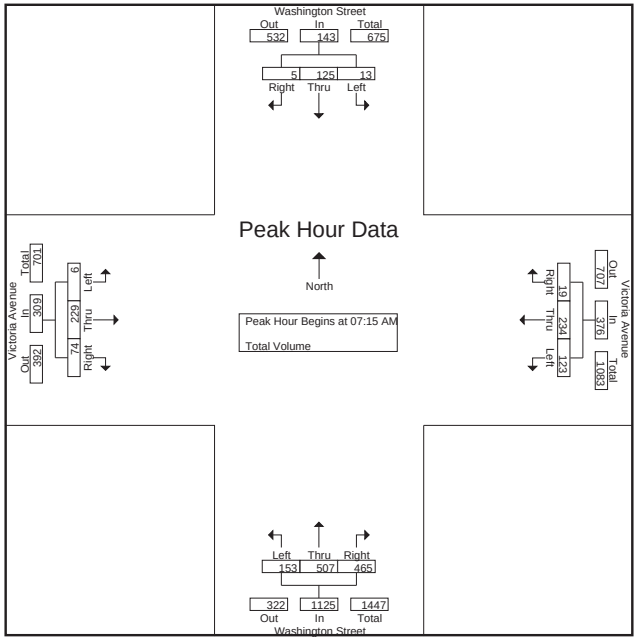

Peak Hour Analysis From 07:00 AM to 08:45 AM - Peak 1 of 1

Peak Hour for Each Approach Begins at:

	07:00 AM				07:15 AM				07:15 AM				07:30 AM			
0 mins.	4	**37**	1	**42**	24	58	2	84	35	134	**127**	296	1	**73**	**21**	**95**
15 mins.	2	30	1	33	27	57	3	87	39	134	114	287	2	54	13	69
30 mins.	3	30	**2**	35	**41**	**68**	**8**	**117**	**44**	**135**	126	**305**	1	59	21	81
45 mins.	**5**	31	2	38	31	51	6	88	35	104	98	237	**3**	72	20	95
Total Volume	14	128	6	148	123	234	19	376	153	507	465	1125	7	258	75	340
% App. Total	9.5	86.5	4.1		32.7	62.2	5.1		13.6	45.1	41.3		2.1	75.9	22.1	
PHF	.700	.865	.750	.881	.750	.860	.594	.803	.869	.939	.915	.922	.583	.884	.893	.895

Counts Unlimited Inc.
PO Box 1178
Corona, CA 92878
(951) 268-6268

City of Riverside
N/S: Washington Street
E/W: Victoria Avenue
Weather: Sunny

File Name : RIVWAVIPM
Site Code : 11046028
Start Date : 3/30/2011
Page No : 1

Groups Printed- Total Volume

	Washington Street Southbound				Victoria Avenue Westbound				Washington Street Northbound				Victoria Avenue Eastbound				
Start Time	Left	Thru	Right	App. Total	Left	Thru	Right	App. Total	Left	Thru	Right	App. Total	Left	Thru	Right	App. Total	Int. Total
04:00 PM	1	63	1	65	53	39	1	93	18	56	42	116	1	54	35	90	364
04:15 PM	4	81	3	88	66	38	7	111	22	68	52	142	1	38	51	90	431
04:30 PM	4	60	1	65	59	50	2	111	28	54	46	128	2	39	47	88	392
04:45 PM	0	63	1	64	76	40	7	123	20	55	43	118	1	55	36	92	397
Total	9	267	6	282	254	167	17	438	88	233	183	504	5	186	169	360	1584
05:00 PM	0	54	0	54	80	38	5	123	29	60	43	132	4	46	44	94	403
05:15 PM	3	64	3	70	74	39	5	118	21	57	46	124	0	63	71	134	446
05:30 PM	0	71	0	71	80	57	6	143	20	60	44	124	1	48	52	101	439
05:45 PM	1	70	4	75	67	54	4	125	19	42	47	108	1	42	45	88	396
Total	4	259	7	270	301	188	20	509	89	219	180	488	6	199	212	417	1684
Grand Total	13	526	13	552	555	355	37	947	177	452	363	992	11	385	381	777	3268
Apprch %	2.4	95.3	2.4		58.6	37.5	3.9		17.8	45.6	36.6		1.4	49.5	49		
Total %	0.4	16.1	0.4	16.9	17	10.9	1.1	29	5.4	13.8	11.1	30.4	0.3	11.8	11.7	23.8	

	Washington Street Southbound				Victoria Avenue Westbound				Washington Street Northbound				Victoria Avenue Eastbound				
Start Time	Left	Thru	Right	App. Total	Left	Thru	Right	App. Total	Left	Thru	Right	App. Total	Left	Thru	Right	App. Total	Int. Total
Peak Hour Analysis From 04:00 PM to 05:45 PM - Peak 1 of 1																	
Peak Hour for Entire Intersection Begins at 04:45 PM																	
04:45 PM	0	63	1	64	76	40	**7**	123	20	55	43	118	1	55	36	92	397
05:00 PM	0	54	0	54	**80**	38	5	123	**29**	**60**	43	**132**	**4**	46	44	94	403
05:15 PM	**3**	64	**3**	70	74	39	5	118	21	57	**46**	124	0	**63**	**71**	**134**	**446**
05:30 PM	0	**71**	0	**71**	80	**57**	6	**143**	20	60	44	124	1	48	52	101	439
Total Volume	3	252	4	259	310	174	23	507	90	232	176	498	6	212	203	421	1685
% App. Total	1.2	97.3	1.5		61.1	34.3	4.5		18.1	46.6	35.3		1.4	50.4	48.2		
PHF	.250	.887	.333	.912	.969	.763	.821	.886	.776	.967	.957	.943	.375	.841	.715	.785	.945

Counts Unlimited Inc.
PO Box 1178
Corona, CA 92878
(951) 268-6268

City of Riverside
N/S: Washington Street
E/W: Victoria Avenue
Weather: Sunny

File Name : RIVWAVIPM
Site Code : 11046028
Start Date : 3/30/2011
Page No : 2

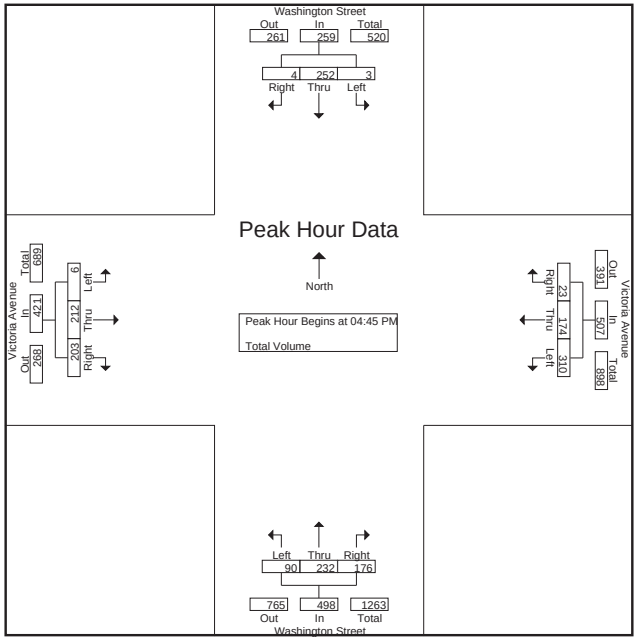

Peak Hour Analysis From 04:00 PM to 05:45 PM - Peak 1 of 1
Peak Hour for Each Approach Begins at:

	04:00 PM				05:00 PM				04:15 PM				04:45 PM			
0 mins.	1	63	1	65	**80**	38	5	123	22	**68**	**52**	**142**	1	55	36	92
15 mins.	**4**	**81**	**3**	**88**	74	39	5	118	28	54	46	128	**4**	46	44	94
30 mins.	4	60	1	65	80	**57**	**6**	**143**	20	55	43	118	0	**63**	**71**	**134**
45 mins.	0	63	1	64	67	54	4	125	**29**	60	43	132	1	48	52	101
Total Volume	9	267	6	282	301	188	20	509	99	237	184	520	6	212	203	421
% App. Total	3.2	94.7	2.1		59.1	36.9	3.9		19	45.6	35.4		1.4	50.4	48.2	
PHF	.563	.824	.500	.801	.941	.825	.833	.890	.853	.871	.885	.915	.375	.841	.715	.785

Counts Unlimited Inc.
PO Box 1178
Corona, CA 92878
(951) 268-6268

City of Riverside
N/S: Washington Street
E/W: Overlook Parkway
Weather: Sunny

File Name : RIVWAOLAM
Site Code : 11046011
Start Date : 3/31/2011
Page No : 1

Groups Printed- Total Volume

	Washington Street Southbound			Overlook Parkway Westbound			Washington Street Northbound			
Start Time	Left	Thru	App. Total	Left	Rght	App. Total	Thru	Rght	App. Total	Int. Total
07:00 AM	16	63	79	5	30	35	187	4	191	305
07:15 AM	12	63	75	4	29	33	268	3	271	379
07:30 AM	12	66	78	13	42	55	256	4	260	393
07:45 AM	20	78	98	5	39	44	266	2	268	410
Total	60	270	330	27	140	167	977	13	990	1487
08:00 AM	19	65	84	7	27	34	197	8	205	323
08:15 AM	16	73	89	5	24	29	193	5	198	316
08:30 AM	20	70	90	4	41	45	163	2	165	300
08:45 AM	17	61	78	2	35	37	155	4	159	274
Total	72	269	341	18	127	145	708	19	727	1213
Grand Total	132	539	671	45	267	312	1685	32	1717	2700
Apprch %	19.7	80.3		14.4	85.6		98.1	1.9		
Total %	4.9	20	24.9	1.7	9.9	11.6	62.4	1.2	63.6	

	Washington Street Southbound			Overlook Parkway Westbound			Washington Street Northbound			
Start Time	Left	Thru	App. Total	Left	Rght	App. Total	Thru	Rght	App. Total	Int. Total
Peak Hour Analysis From 07:00 AM to 08:45 AM - Peak 1 of 1										
Peak Hour for Entire Intersection Begins at 07:15 AM										
07:15 AM	12	63	75	4	29	33	**268**	3	**271**	379
07:30 AM	12	66	78	**13**	**42**	**55**	256	4	260	393
07:45 AM	**20**	**78**	**98**	5	39	44	266	2	268	**410**
08:00 AM	19	65	84	7	27	34	197	**8**	205	323
Total Volume	63	272	335	29	137	166	987	17	1004	1505
% App. Total	18.8	81.2		17.5	82.5		98.3	1.7		
PHF	.788	.872	.855	.558	.815	.755	.921	.531	.926	.918

Counts Unlimited Inc.
PO Box 1178
Corona, CA 92878
(951) 268-6268

City of Riverside
N/S: Washington Street
E/W: Overlook Parkway
Weather: Sunny

File Name : RIVWAOLAM
Site Code : 11046011
Start Date : 3/31/2011
Page No : 2

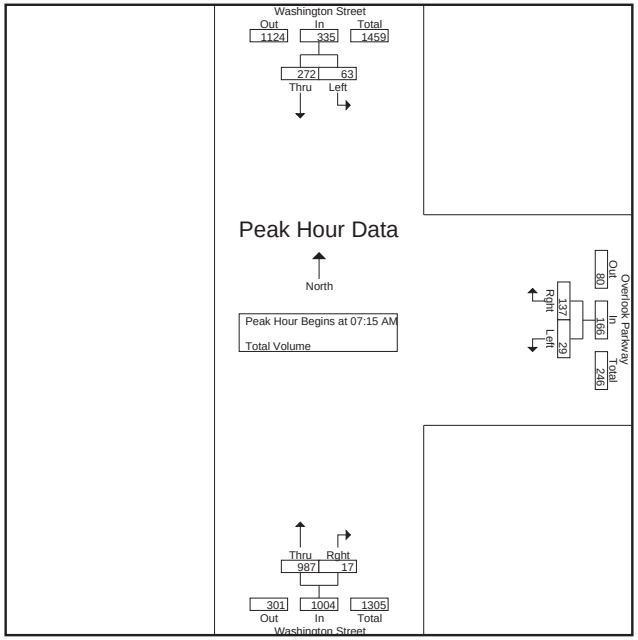

Peak Hour Analysis From 07:00 AM to 08:45 AM - Peak 1 of 1
Peak Hour for Each Approach Begins at:

	07:45 AM			07:00 AM			07:15 AM		
+0 mins.	**20**	**78**	**98**	5	30	35	**268**	3	**271**
+15 mins.	19	65	84	4	29	33	256	4	260
+30 mins.	16	73	89	**13**	**42**	**55**	266	2	268
+45 mins.	20	70	90	5	39	44	197	**8**	205
Total Volume	75	286	361	27	140	167	987	17	1004
% App. Total	20.8	79.2		16.2	83.8		98.3	1.7	
PHF	.938	.917	.921	.519	.833	.759	.921	.531	.926

Counts Unlimited Inc.
PO Box 1178
Corona, CA 92878
(951) 268-6268

City of Riverside
N/S: Washington Street
E/W: Overlook Parkway
Weather: Sunny

File Name : RIVWAOLPM
Site Code : 11046011
Start Date : 3/31/2011
Page No : 1

Groups Printed- Total Volume

	Washington Street Southbound			Overlook Parkway Westbound			Washington Street Northbound			
Start Time	Left	Thru	App. Total	Left	Rght	App. Total	Thru	Rght	App. Total	Int. Total
04:00 PM	15	143	158	8	27	35	91	1	92	285
04:15 PM	31	163	194	6	20	26	100	8	108	328
04:30 PM	30	154	184	5	21	26	101	6	107	317
04:45 PM	30	146	176	5	29	34	100	3	103	313
Total	106	606	712	24	97	121	392	18	410	1243
05:00 PM	24	177	201	2	28	30	107	6	113	344
05:15 PM	41	187	228	5	16	21	107	5	112	361
05:30 PM	35	178	213	4	26	30	91	6	97	340
05:45 PM	22	155	177	6	15	21	93	5	98	296
Total	122	697	819	17	85	102	398	22	420	1341
Grand Total	228	1303	1531	41	182	223	790	40	830	2584
Apprch %	14.9	85.1		18.4	81.6		95.2	4.8		
Total %	8.8	50.4	59.2	1.6	7	8.6	30.6	1.5	32.1	

	Washington Street Southbound			Overlook Parkway Westbound			Washington Street Northbound			
Start Time	Left	Thru	App. Total	Left	Rght	App. Total	Thru	Rght	App. Total	Int. Total
Peak Hour Analysis From 04:00 PM to 05:45 PM - Peak 1 of 1										
Peak Hour for Entire Intersection Begins at 04:45 PM										
04:45 PM	30	146	176	**5**	**29**	**34**	100	3	103	313
05:00 PM	24	177	201	2	28	30	**107**	**6**	**113**	344
05:15 PM	**41**	**187**	**228**	5	16	21	107	5	112	**361**
05:30 PM	35	178	213	4	26	30	91	6	97	340
Total Volume	130	688	818	16	99	115	405	20	425	1358
% App. Total	15.9	84.1		13.9	86.1		95.3	4.7		
PHF	.793	.920	.897	.800	.853	.846	.946	.833	.940	.940

Counts Unlimited Inc.
PO Box 1178
Corona, CA 92878
(951) 268-6268

City of Riverside
N/S: Washington Street
E/W: Overlook Parkway
Weather: Sunny

File Name : RIVWAOLPM
Site Code : 11046011
Start Date : 3/31/2011
Page No : 2

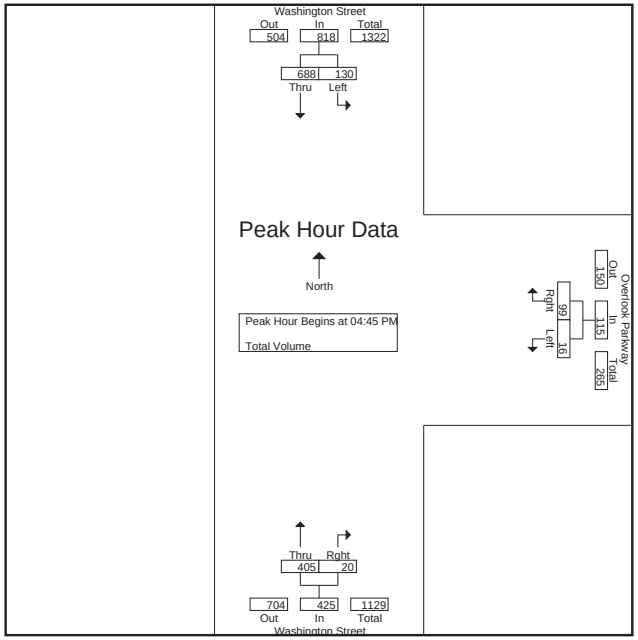

Peak Hour Analysis From 04:00 PM to 05:45 PM - Peak 1 of 1
Peak Hour for Each Approach Begins at:

	05:00 PM			04:00 PM			04:30 PM		
+0 mins.	24	177	201	**8**	27	**35**	101	**6**	107
+15 mins.	**41**	**187**	**228**	6	20	26	100	3	103
+30 mins.	35	178	213	5	21	26	**107**	6	**113**
+45 mins.	22	155	177	5	**29**	34	107	5	112
Total Volume	122	697	819	24	97	121	415	20	435
% App. Total	14.9	85.1		19.8	80.2		95.4	4.6	
PHF	.744	.932	.898	.750	.836	.864	.970	.833	.962

Counts Unlimited Inc.
PO Box 1178
Corona, CA 92878
(951) 268-6268

City of Riverside
N/S: SR-91 WB Ramps/Riverside Avenue
E/W: Arlington Avenue
Weather: Sunny

File Name : RIV91WARAM
Site Code : 11046066
Start Date : 3/31/2011
Page No : 1

Groups Printed- Total Volume

	SR-91 WB Off Ramp/Riverside Avenue Southbound				Arlington Avenue Westbound				SR-91 Westbound On Ramp Northbound				Arlington Avenue Eastbound				
Start Time	Left	Thru	Right	App. Total	Left	Thru	Right	App. Total	Left	Thru	Right	App. Total	Left	Thru	Right	App. Total	Int. Total
07:00 AM	107	6	59	172	119	111	23	253	0	0	0	0	4	127	7	138	563
07:15 AM	118	8	80	206	125	145	54	324	0	0	0	0	6	193	16	215	745
07:30 AM	117	12	82	211	129	196	73	398	0	0	0	0	6	153	28	187	796
07:45 AM	132	12	128	272	129	269	68	466	0	0	0	0	19	161	32	212	950
Total	474	38	349	861	502	721	218	1441	0	0	0	0	35	634	83	752	3054
08:00 AM	138	9	107	254	109	221	49	379	0	0	0	0	23	171	26	220	853
08:15 AM	90	11	156	257	118	195	58	371	0	0	0	0	18	225	31	274	902
08:30 AM	115	7	93	215	110	145	44	299	0	0	0	0	10	179	23	212	726
08:45 AM	88	12	123	223	125	194	36	355	0	0	0	0	9	172	21	202	780
Total	431	39	479	949	462	755	187	1404	0	0	0	0	60	747	101	908	3261
Grand Total	905	77	828	1810	964	1476	405	2845	0	0	0	0	95	1381	184	1660	6315
Apprch %	50	4.3	45.7		33.9	51.9	14.2		0	0	0		5.7	83.2	11.1		
Total %	14.3	1.2	13.1	28.7	15.3	23.4	6.4	45.1	0	0	0	0	1.5	21.9	2.9	26.3	

	SR-91 WB Off Ramp/Riverside Avenue Southbound				Arlington Avenue Westbound				SR-91 Westbound On Ramp Northbound				Arlington Avenue Eastbound				
Start Time	Left	Thru	Right	App. Total	Left	Thru	Right	App. Total	Left	Thru	Right	App. Total	Left	Thru	Right	App. Total	Int. Total
Peak Hour Analysis From 07:00 AM to 08:45 AM - Peak 1 of 1																	
Peak Hour for Entire Intersection Begins at 07:30 AM																	
07:30 AM	117	**12**	82	211	**129**	196	**73**	398	0	0	0	0	6	153	28	187	796
07:45 AM	132	12	128	**272**	129	**269**	68	**466**	0	0	0	0	19	161	**32**	212	**950**
08:00 AM	**138**	9	107	254	109	221	49	379	0	0	0	0	**23**	171	26	220	853
08:15 AM	90	11	**156**	257	118	195	58	371	0	0	0	0	18	**225**	31	**274**	902
Total Volume	477	44	473	994	485	881	248	1614	0	0	0	0	66	710	117	893	3501
% App. Total	48	4.4	47.6		30	54.6	15.4		0	0	0		7.4	79.5	13.1		
PHF	.864	.917	.758	.914	.940	.819	.849	.866	.000	.000	.000	.000	.717	.789	.914	.815	.921

Counts Unlimited Inc.
PO Box 1178
Corona, CA 92878
(951) 268-6268

City of Riverside
N/S: SR-91 WB Ramps/Riverside Avenue
E/W: Arlington Avenue
Weather: Sunny

File Name : RIV91WARAM
Site Code : 11046066
Start Date : 3/31/2011
Page No : 2

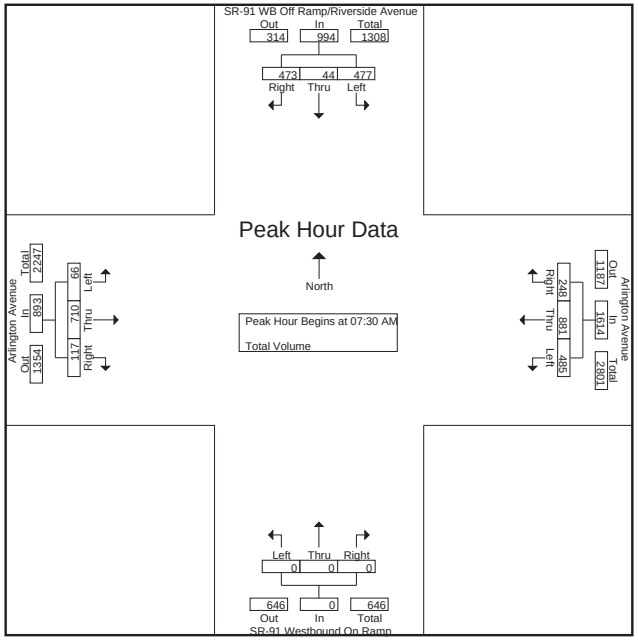

Peak Hour Analysis From 07:00 AM to 08:45 AM - Peak 1 of 1

Peak Hour for Each Approach Begins at:

	07:45 AM				07:30 AM				07:00 AM				07:45 AM			
0 mins.	132	**12**	128	**272**	**129**	196	**73**	398	0	0	0	0	19	161	**32**	212
15 mins.	**138**	9	107	254	129	**269**	68	**466**	0	0	0	0	**23**	171	26	220
30 mins.	90	11	**156**	257	109	221	49	379	0	0	0	0	18	**225**	31	**274**
45 mins.	115	7	93	215	118	195	58	371	0	0	0	0	10	179	23	212
Total Volume	475	39	484	998	485	881	248	1614	0	0	0	0	70	736	112	918
% App. Total	47.6	3.9	48.5		30	54.6	15.4		0	0	0		7.6	80.2	12.2	
PHF	.861	.813	.776	.917	.940	.819	.849	.866	.000	.000	.000	.000	.761	.818	.875	.838

Counts Unlimited Inc.
PO Box 1178
Corona, CA 92878
(951) 268-6268

City of Riverside
N/S: SR-91 WB Ramps/Riverside Avenue
E/W: Arlington Avenue
Weather: Sunny

File Name : RIV91WARPM
Site Code : 11046066
Start Date : 3/31/2011
Page No : 1

Groups Printed- Total Volume

	SR-91 WB ff Ramp/Riverside Avenue Southbound				Arlington Avenue Westbound				SR-91 Westbound n Ramp Northbound				Arlington Avenue Eastbound				
Start Time	Left	Thru	Right	App. Total	Left	Thru	Right	App. Total	Left	Thru	Right	App. Total	Left	Thru	Right	App. Total	Int. Total
04:00 PM	145	20	92	257	97	130	59	286	0	0	0	0	19	275	36	330	873
04:15 PM	134	27	102	263	107	154	49	310	0	0	0	0	20	234	38	292	865
04:30 PM	154	22	101	277	113	157	59	329	0	0	0	0	10	274	46	330	936
04:45 PM	167	19	82	268	128	165	49	342	0	0	0	0	9	271	35	315	925
Total	600	88	377	1065	445	606	216	1267	0	0	0	0	58	1054	155	1267	3599
05:00 PM	182	28	83	293	108	131	61	300	0	0	0	0	15	260	67	342	935
05:15 PM	147	17	85	249	114	183	50	347	0	0	0	0	13	247	41	301	897
05:30 PM	164	24	81	269	96	158	49	303	0	0	0	0	21	253	38	312	884
05:45 PM	144	24	71	239	94	152	37	283	0	0	0	0	14	239	41	294	816
Total	637	93	320	1050	412	624	197	1233	0	0	0	0	63	999	187	1249	3532
Grand Total	1237	181	697	2115	857	1230	413	2500	0	0	0	0	121	2053	342	2516	7131
Apprch %	58.5	8.6	33		34.3	49.2	16.5		0	0	0		4.8	81.6	13.6		
Total %	17.3	2.5	9.8	29.7	12	17.2	5.8	35.1	0	0	0	0	1.7	28.8	4.8	35.3	

	SR-91 WB ff Ramp/Riverside Avenue Southbound				Arlington Avenue Westbound				SR-91 Westbound n Ramp Northbound				Arlington Avenue Eastbound				
Start Time	Left	Thru	Right	App. Total	Left	Thru	Right	App. Total	Left	Thru	Right	App. Total	Left	Thru	Right	App. Total	Int. Total
Peak Hour Analysis From 04:00 PM to 05:45 PM - Peak 1 of 1																	
Peak Hour for Entire Intersection Begins at 04:30 PM																	
04:30 PM	154	22	**101**	277	113	157	59	329	0	0	0	0	10	**274**	46	330	**936**
04:45 PM	167	19	82	268	**128**	165	49	342	0	0	0	0	9	271	35	315	925
05:00 PM	**182**	**28**	83	**293**	108	131	**61**	300	0	0	0	0	**15**	260	**67**	**342**	935
05:15 PM	147	17	85	249	114	**183**	50	**347**	0	0	0	0	13	247	41	301	897
Total Volume	650	86	351	1087	463	636	219	1318	0	0	0	0	47	1052	189	1288	3693
% App. Total	59.8	7.9	32.3		35.1	48.3	16.6		0	0	0		3.6	81.7	14.7		
PHF	.893	.768	.869	.927	.904	.869	.898	.950	.000	.000	.000	.000	.783	.960	.705	.942	.986

Counts Unlimited Inc.
PO Box 1178
Corona, CA 92878
(951) 268-6268

City of Riverside
N/S: SR-91 WB Ramps/Riverside Avenue
E/W: Arlington Avenue
Weather: Sunny

File Name : RIV91WARPM
Site Code : 11046066
Start Date : 3/31/2011
Page No : 2

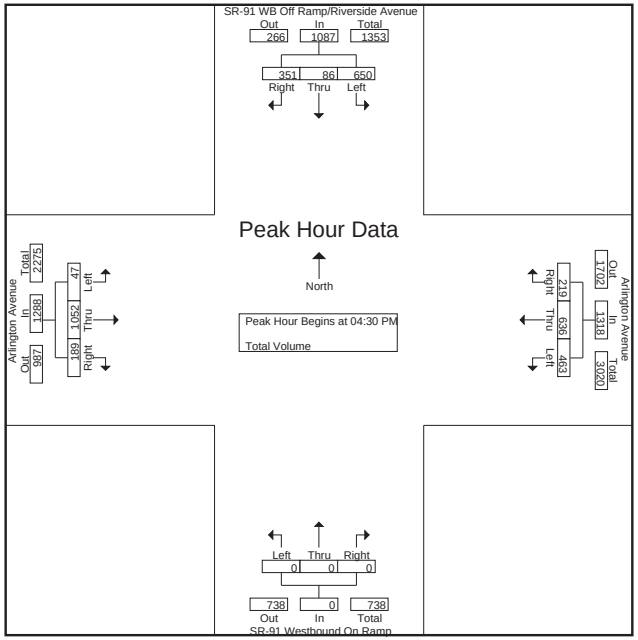

Peak Hour Analysis From 04:00 PM to 05:45 PM - Peak 1 of 1

Peak Hour for Each Approach Begins at:

	04:15 PM				04:30 PM				04:00 PM				04:30 PM			
0 mins.	134	27	**102**	263	113	157	59	329	0	0	0	0	10	**274**	46	330
15 mins.	154	22	101	277	**128**	165	49	342	0	0	0	0	9	271	35	315
30 mins.	167	19	82	268	108	131	**61**	300	0	0	0	0	**15**	260	**67**	**342**
45 mins.	**182**	**28**	83	**293**	114	**183**	50	**347**	0	0	0	0	13	247	41	301
Total Volume	637	96	368	1101	463	636	219	1318	0	0	0	0	47	1052	189	1288
% App. Total	57.9	8.7	33.4		35.1	48.3	16.6		0	0	0		3.6	81.7	14.7	
PHF	.875	.857	.902	.939	.904	.869	.898	.950	.000	.000	.000	.000	.783	.960	.705	.942

Counts Unlimited Inc.
PO Box 1178
Corona, CA 92878
(951) 268-6268

City of Riverside
N/S: SR-91 EB On/Indiana Avenue
E/W: Arlington Avenue
Weather: Sunny

File Name : RIV91EARAM
Site Code : 11046063
Start Date : 3/31/2011
Page No : 1

Groups Printed- Total Volume

	SR-91 Eastbound n Ramp Southbound				Arlington Avenue Westbound				Indiana Avenue Northbound				Arlington Avenue Eastbound				
Start Time	Left	Thru	Right	App. Total	Left	Thru	Right	App. Total	Left	Thru	Right	App. Total	Left	Thru	Right	App. Total	Int. Total
07:00 AM	0	0	0	0	24	242	64	330	18	83	85	186	54	151	30	235	751
07:15 AM	0	0	0	0	25	284	101	410	37	102	98	237	72	191	35	298	945
07:30 AM	0	0	0	0	28	362	96	486	52	118	103	273	65	180	25	270	1029
07:45 AM	0	0	0	0	29	397	103	529	63	89	97	249	51	170	70	291	1069
Total	0	0	0	0	106	1285	364	1755	170	392	383	945	242	692	160	1094	3794
08:00 AM	0	0	0	0	37	345	64	446	51	91	102	244	66	188	58	312	1002
08:15 AM	0	0	0	0	36	308	66	410	53	74	86	213	70	158	46	274	897
08:30 AM	0	0	0	0	32	278	57	367	41	82	78	201	67	183	59	309	877
08:45 AM	0	0	0	0	55	281	36	372	44	65	85	194	60	130	43	233	799
Total	0	0	0	0	160	1212	223	1595	189	312	351	852	263	659	206	1128	3575
Grand Total	0	0	0	0	266	2497	587	3350	359	704	734	1797	505	1351	366	2222	7369
Apprch %	0	0	0		7.9	74.5	17.5		20	39.2	40.8		22.7	60.8	16.5		
Total %	0	0	0	0	3.6	33.9	8	45.5	4.9	9.6	10	24.4	6.9	18.3	5	30.2	

	SR-91 Eastbound n Ramp Southbound				Arlington Avenue Westbound				Indiana Avenue Northbound				Arlington Avenue Eastbound				
Start Time	Left	Thru	Right	App. Total	Left	Thru	Right	App. Total	Left	Thru	Right	App. Total	Left	Thru	Right	App. Total	Int. Total
Peak Hour Analysis From 07:00 AM to 08:45 AM - Peak 1 of 1																	
Peak Hour for Entire Intersection Begins at 07:15 AM																	
07:15 AM	0	0	0	0	25	284	101	410	37	102	98	237	**72**	**191**	35	298	945
07:30 AM	0	0	0	0	28	362	96	486	52	**118**	**103**	**273**	65	180	25	270	1029
07:45 AM	0	0	0	0	29	**397**	**103**	**529**	**63**	89	97	249	51	170	**70**	291	**1069**
08:00 AM	0	0	0	0	**37**	345	64	446	51	91	102	244	66	188	58	**312**	1002
Total Volume	0	0	0	0	119	1388	364	1871	203	400	400	1003	254	729	188	1171	4045
% App. Total	0	0	0		6.4	74.2	19.5		20.2	39.9	39.9		21.7	62.3	16.1		
PHF	.000	.000	.000	.000	.804	.874	.883	.884	.806	.847	.971	.918	.882	.954	.671	.938	.946

Counts Unlimited Inc.
PO Box 1178
Corona, CA 92878
(951) 268-6268

City of Riverside
N/S: SR-91 EB On/Indiana Avenue
E/W: Arlington Avenue
Weather: Sunny

File Name : RIV91EARAM
Site Code : 11046063
Start Date : 3/31/2011
Page No : 2

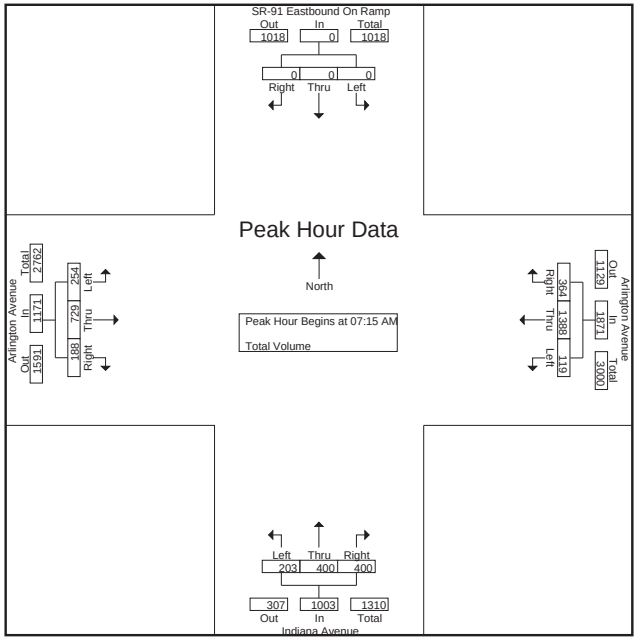

Peak Hour Analysis From 07:00 AM to 08:45 AM - Peak 1 of 1

Peak Hour for Each Approach Begins at:

	07:00 AM				07:15 AM				07:15 AM				07:45 AM			
0 mins.	0	0	0	0	25	284	101	410	37	102	98	237	51	170	**70**	291
15 mins.	0	0	0	0	28	362	96	486	52	**118**	**103**	**273**	66	**188**	58	**312**
30 mins.	0	0	0	0	29	**397**	**103**	**529**	**63**	89	97	249	**70**	158	46	274
45 mins.	0	0	0	0	**37**	345	64	446	51	91	102	244	67	183	59	309
Total Volume	0	0	0	0	119	1388	364	1871	203	400	400	1003	254	699	233	1186
% App. Total	0	0	0		6.4	74.2	19.5		20.2	39.9	39.9		21.4	58.9	19.6	
PHF	.000	.000	.000	.000	.804	.874	.883	.884	.806	.847	.971	.918	.907	.930	.832	.950

Counts Unlimited Inc.
PO Box 1178
Corona, CA 92878
(951) 268-6268

City of Riverside
N/S: SR-91 EB On/Indiana Avenue
E/W: Arlington Avenue
Weather: Sunny

File Name : RIV91EARPM
Site Code : 11046063
Start Date : 3/31/2011
Page No : 1

Groups Printed- Total Volume

	SR-91 Eastbound On Ramp Southbound				Arlington Avenue Westbound				Indiana Avenue Northbound				Arlington Avenue Eastbound				
Start Time	Left	Thru	Right	App. Total	Left	Thru	Right	App. Total	Left	Thru	Right	App. Total	Left	Thru	Right	App. Total	Int. Total
04:00 PM	0	0	0	0	26	225	75	326	44	80	143	267	85	273	58	416	1009
04:15 PM	0	0	0	0	34	257	57	348	46	57	122	225	79	249	55	383	956
04:30 PM	0	0	0	0	31	264	45	340	50	82	101	233	81	250	49	380	953
04:45 PM	0	0	0	0	25	271	50	346	37	55	73	165	90	252	52	394	905
Total	0	0	0	0	116	1017	227	1360	177	274	439	890	335	1024	214	1573	3823
05:00 PM	0	0	0	0	47	238	50	335	50	91	137	278	90	248	64	402	1015
05:15 PM	0	0	0	0	33	306	61	400	40	79	130	249	77	274	56	407	1056
05:30 PM	0	0	0	0	45	263	69	377	46	78	126	250	78	244	46	368	995
05:45 PM	0	0	0	0	33	246	35	314	44	60	82	186	73	274	45	392	892
Total	0	0	0	0	158	1053	215	1426	180	308	475	963	318	1040	211	1569	3958
Grand Total	0	0	0	0	274	2070	442	2786	357	582	914	1853	653	2064	425	3142	7781
Apprch %	0	0	0		9.8	74.3	15.9		19.3	31.4	49.3		20.8	65.7	13.5		
Total %	0	0	0	0	3.5	26.6	5.7	35.8	4.6	7.5	11.7	23.8	8.4	26.5	5.5	40.4	

	SR-91 Eastbound On Ramp Southbound				Arlington Avenue Westbound				Indiana Avenue Northbound				Arlington Avenue Eastbound				
Start Time	Left	Thru	Right	App. Total	Left	Thru	Right	App. Total	Left	Thru	Right	App. Total	Left	Thru	Right	App. Total	Int. Total
Peak Hour Analysis From 04:00 PM to 05:45 PM - Peak 1 of 1																	
Peak Hour for Entire Intersection Begins at 04:45 PM																	
04:45 PM	0	0	0	0	25	271	50	346	37	55	73	165	**90**	252	52	394	905
05:00 PM	0	0	0	0	**47**	238	50	335	**50**	**91**	**137**	**278**	90	248	**64**	402	1015
05:15 PM	0	0	0	0	33	**306**	61	**400**	40	79	130	249	77	**274**	56	**407**	**1056**
05:30 PM	0	0	0	0	45	263	**69**	377	46	78	126	250	78	244	46	368	995
Total Volume	0	0	0	0	150	1078	230	1458	173	303	466	942	335	1018	218	1571	3971
% App. Total	0	0	0		10.3	73.9	15.8		18.4	32.2	49.5		21.3	64.8	13.9		
PHF	.000	.000	.000	.000	.798	.881	.833	.911	.865	.832	.850	.847	.931	.929	.852	.965	.940

Counts Unlimited Inc.
PO Box 1178
Corona, CA 92878
(951) 268-6268

City of Riverside
N/S: SR-91 EB On/Indiana Avenue
E/W: Arlington Avenue
Weather: Sunny

File Name : RIV91EARPM
Site Code : 11046063
Start Date : 3/31/2011
Page No : 2

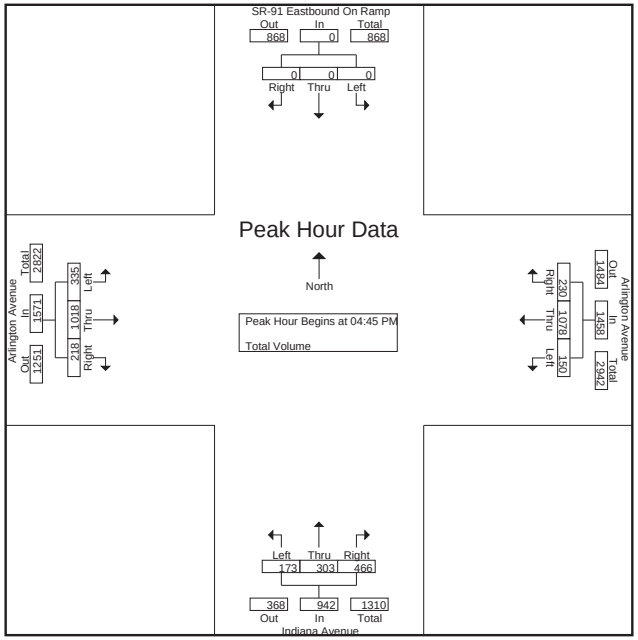

Peak Hour Analysis From 04:00 PM to 05:45 PM - Peak 1 of 1

Peak Hour for Each Approach Begins at:

	04:00 PM				04:45 PM				05:00 PM				04:30 PM			
0 mins.	0	0	0	0	25	271	50	346	**50**	**91**	**137**	**278**	81	250	49	380
15 mins.	0	0	0	0	**47**	238	50	335	40	79	130	249	**90**	252	52	394
30 mins.	0	0	0	0	33	**306**	61	**400**	46	78	126	250	90	248	**64**	402
45 mins.	0	0	0	0	45	263	**69**	377	44	60	82	186	77	**274**	56	**407**
Total Volume	0	0	0	0	150	1078	230	1458	180	308	475	963	338	1024	221	1583
% App. Total	0	0	0		10.3	73.9	15.8		18.7	32	49.3		21.4	64.7	14	
PHF	.000	.000	.000	.000	.798	.881	.833	.911	.900	.846	.867	.866	.939	.934	.863	.972

Counts Unlimited Inc.
PO Box 1178
Corona, CA 92878
(951) 268-6268

City of Riverside
N/S: Victoria Avenue
E/W: Arlington Avenue
Weather: Sunny

File Name : RIVVIARAM
Site Code : 1104611_
Start Date : 3/31/2011
Page No : 1

Groups Printed- Total Volume

	Victoria Avenue Southbound				Arlington Avenue Westbound				Victoria Avenue Northbound				Arlington Avenue Eastbound				
Start Time	Left	Thru	Rght	App. Total	Left	Thru	Rght	App. Total	Left	Thru	Rght	App. Total	Left	Thru	Rght	App. Total	Int. Total
07:00 AM	15	82	14	111	89	255	22	366	5	70	74	149	29	97	3	129	755
07:15 AM	19	85	17	121	127	315	28	470	5	117	102	224	34	155	5	194	1009
07:30 AM	35	62	25	122	76	335	68	479	9	135	79	223	45	187	2	234	1058
07:45 AM	59	97	42	198	113	339	79	531	5	91	69	165	38	165	2	205	1099
Total	128	326	98	552	405	1244	197	1846	24	413	324	761	146	604	12	762	3921
08:00 AM	17	38	16	71	69	274	8	351	5	46	92	143	19	159	2	180	745
08:15 AM	16	28	14	58	48	288	7	343	4	42	76	122	26	168	2	196	719
08:30 AM	6	20	14	40	37	276	11	324	3	31	47	81	13	173	3	189	634
08:45 AM	10	28	21	59	51	237	10	298	4	44	52	100	19	139	1	159	616
Total	49	114	65	228	205	1075	36	1316	16	163	267	446	77	639	8	724	2714
Grand Total	177	440	163	780	610	2319	233	3162	40	576	591	1207	223	1243	20	1486	6635
Apprch %	22.7	56.4	20.9		19.3	73.3	7.4		3.3	47.7	49		15	83.6	1.3		
Total %	2.7	6.6	2.5	11.8	9.2	35	3.5	47.7	0.6	8.7	8.9	18.2	3.4	18.7	0.3	22.4	

	Victoria Avenue Southbound				Arlington Avenue Westbound				Victoria Avenue Northbound				Arlington Avenue Eastbound				
Start Time	Left	Thru	Rght	App. Total	Left	Thru	Rght	App. Total	Left	Thru	Rght	App. Total	Left	Thru	Rght	App. Total	Int. Total
Peak Hour Analysis From 07:00 AM to 08:45 AM - Peak 1 of 1																	
Peak Hour for Entire Intersection Begins at 07:00 AM																	
07:00 AM	15	82	14	111	89	255	22	366	5	70	74	149	29	97	3	129	755
07:15 AM	19	85	17	121	**127**	315	28	470	5	117	**102**	**224**	34	155	**5**	194	1009
07:30 AM	35	62	25	122	76	335	68	479	**9**	**135**	79	223	**45**	**187**	2	**234**	1058
07:45 AM	**59**	**97**	**42**	**198**	113	**339**	**79**	**531**	5	91	69	165	38	165	2	205	**1099**
Total Volume	128	326	98	552	405	1244	197	1846	24	413	324	761	146	604	12	762	3921
% App. Total	23.2	59.1	17.8		21.9	67.4	10.7		3.2	54.3	42.6		19.2	79.3	1.6		
PHF	.542	.840	.583	.697	.797	.917	.623	.869	.667	.765	.794	.849	.811	.807	.600	.814	.892

Counts Unlimited Inc.
PO Box 1178
Corona, CA 92878
(951) 268-6268

City of Riverside
N/S: Victoria Avenue
E/W: Arlington Avenue
Weather: Sunny

File Name : RIVVIARAM
Site Code : 1104611_
Start Date : 3/31/2011
Page No : 2

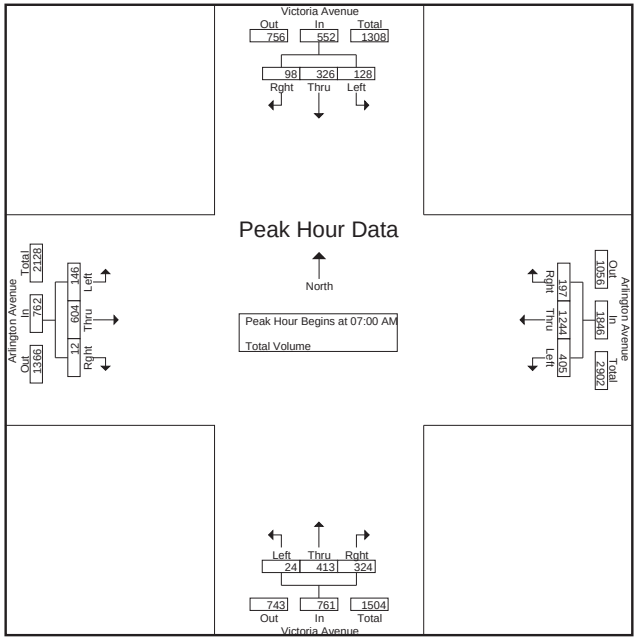

Peak Hour Analysis From 07:00 AM to 08:45 AM - Peak 1 of 1
Peak Hour for Each Approach Begins at:

	07:00 AM				07:00 AM				07:00 AM				07:30 AM			
+0 mins.	15	82	14	111	89	255	22	366	5	70	74	149	**45**	**187**	**2**	**234**
+15 mins.	19	85	17	121	**127**	315	28	470	5	117	**102**	**224**	38	165	2	205
+30 mins.	35	62	25	122	76	335	68	479	**9**	**135**	79	223	19	159	2	180
+45 mins.	**59**	**97**	**42**	**198**	113	**339**	**79**	**531**	5	91	69	165	26	168	2	196
Total Volume	128	326	98	552	405	1244	197	1846	24	413	324	761	128	679	8	815
% App. Total	23.2	59.1	17.8		21.9	67.4	10.7		3.2	54.3	42.6		15.7	83.3	1	
PHF	.542	.840	.583	.697	.797	.917	.623	.869	.667	.765	.794	.849	.711	.908	1.000	.871

Counts Unlimited Inc.
PO Box 1178
Corona, CA 92878
(951) 268-6268

City of Riverside
N/S: Victoria Avenue
E/W: Arlington Avenue
Weather: Sunny

File Name : RIVVIARPM
Site Code : 11046001
Start Date : 3/31/2011
Page No : 1

Groups Printed- Total Volume

	Victoria Avenue Southbound				Arlington Avenue Westbound				Victoria Avenue Northbound				Arlington Avenue Eastbound				
Start Time	Left	Thru	Rght	App. Total	Left	Thru	Rght	App. Total	Left	Thru	Rght	App. Total	Left	Thru	Rght	App. Total	Int. Total
04:00 PM	18	60	25	103	86	210	10	306	4	47	103	154	23	317	2	342	905
04:15 PM	15	57	23	95	67	223	8	298	6	40	106	152	13	279	9	301	846
04:30 PM	11	49	13	73	50	192	7	249	4	35	99	138	22	342	4	368	828
04:45 PM	13	62	12	87	79	245	3	327	5	34	94	133	20	341	5	366	913
Total	57	228	73	358	282	870	28	1180	19	156	402	577	78	1279	20	1377	3492
05:00 PM	16	73	22	111	84	176	8	268	4	32	106	142	13	305	5	323	844
05:15 PM	24	52	14	90	79	267	12	358	7	44	118	169	7	330	5	342	959
05:30 PM	19	58	20	97	94	243	4	341	5	46	99	150	18	335	4	357	945
05:45 PM	25	62	37	124	54	192	6	252	4	48	108	160	26	265	6	297	833
Total	84	245	93	422	311	878	30	1219	20	170	431	621	64	1235	20	1319	3581
Grand Total	141	473	166	780	593	1748	58	2399	39	326	833	1198	142	2514	40	2696	7073
Apprch %	18.1	60.6	21.3		24.7	72.9	2.4		3.3	27.2	69.5		5.3	93.2	1.5		
Total %	2	6.7	2.3	11	8.4	24.7	0.8	33.9	0.6	4.6	11.8	16.9	2	35.5	0.6	38.1	

	Victoria Avenue Southbound				Arlington Avenue Westbound				Victoria Avenue Northbound				Arlington Avenue Eastbound				
Start Time	Left	Thru	Rght	App. Total	Left	Thru	Rght	App. Total	Left	Thru	Rght	App. Total	Left	Thru	Rght	App. Total	Int. Total
Peak Hour Analysis From 04:00 PM to 05:45 PM - Peak 1 of 1																	
Peak Hour for Entire Intersection Begins at 04:45 PM																	
04:45 PM	13	62	12	87	79	245	3	327	5	34	94	133	**20**	**341**	**5**	**366**	913
05:00 PM	16	**73**	**22**	**111**	84	176	8	268	4	32	106	142	13	305	5	323	844
05:15 PM	**24**	52	14	90	79	**267**	**12**	**358**	**7**	44	**118**	**169**	7	330	5	342	**959**
05:30 PM	19	58	20	97	**94**	243	4	341	5	**46**	99	150	18	335	4	357	945
Total Volume	72	245	68	385	336	931	27	1294	21	156	417	594	58	1311	19	1388	3661
% App. Total	18.7	63.6	17.7		26	71.9	2.1		3.5	26.3	70.2		4.2	94.5	1.4		
PHF	.750	.839	.773	.867	.894	.872	.563	.904	.750	.848	.883	.879	.725	.961	.950	.948	.954

Counts Unlimited Inc.
PO Box 1178
Corona, CA 92878
(951) 268-6268

City of Riverside
N/S: Victoria Avenue
E/W: Arlington Avenue
Weather: Sunny

File Name : RIVVIARPM
Site Code : 11046001
Start Date : 3/31/2011
Page No : 2

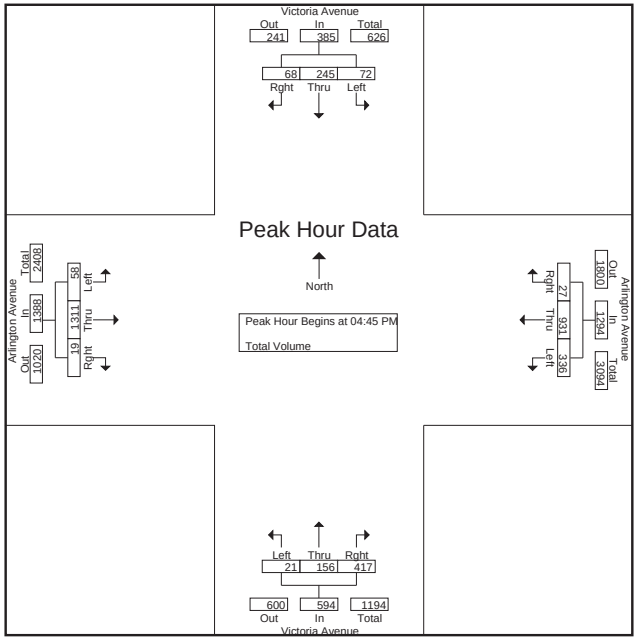

Peak Hour Analysis From 04:00 PM to 05:45 PM - Peak 1 of 1
Peak Hour for Each Approach Begins at:

	05:00 PM				04:45 PM				05:00 PM				04:30 PM			
+0 mins.	16	**73**	22	111	79	245	3	327	4	32	106	142	**22**	**342**	4	**368**
+15 mins.	24	52	14	90	84	176	8	268	**7**	44	**118**	**169**	20	341	**5**	366
+30 mins.	19	58	20	97	79	**267**	**12**	**358**	5	46	99	150	13	305	5	323
+45 mins.	**25**	62	**37**	**124**	**94**	243	4	341	4	**48**	108	160	7	330	5	342
Total Volume	84	245	93	422	336	931	27	1294	20	170	431	621	62	1318	19	1399
% App. Total	19.9	58.1	22		26	71.9	2.1		3.2	27.4	69.4		4.4	94.2	1.4	
PHF	.840	.839	.628	.851	.894	.872	.563	.904	.714	.885	.913	.919	.705	.963	.950	.950

Counts Unlimited Inc.
PO Box 1178
Corona, CA 92878
(951) 268-6268

City of Riverside
N/S: Alessandro Boulevard
E/W: Arlington Avenue
Weather: Sunny

File Name : RIVALARAM
Site Code : 1104611
Start Date : 3/31/2011
Page No : 1

Groups Printed- Total Volume

	Alessandro Boulevard Southbound				Chicago Avenue Westbound				Alessandro Boulevard Northbound				Arliington Avneue Eastbound				
Start Time	Left	Thru	Rght	App. Total	Left	Thru	Rght	App. Total	Left	Thru	Rght	App. Total	Left	Thru	Rght	App. Total	Int. Total
07:00 AM	18	102	8	128	11	136	43	190	236	309	65	610	1	72	101	174	1102
07:15 AM	45	100	9	154	19	126	62	207	281	425	108	814	8	112	127	247	1422
07:30 AM	56	98	15	169	15	131	97	243	330	452	94	876	12	124	158	294	1582
07:45 AM	77	120	15	212	40	143	82	265	331	384	97	812	13	122	129	264	1553
Total	196	420	47	663	85	536	284	905	1178	1570	364	3112	34	430	515	979	5659
08:00 AM	50	101	7	158	27	105	53	185	204	256	63	523	4	118	147	269	1135
08:15 AM	54	98	13	165	38	87	65	190	230	276	66	572	4	89	139	232	1159
08:30 AM	57	119	7	183	19	68	49	136	210	240	52	502	7	85	128	220	1041
08:45 AM	33	77	9	119	19	87	62	168	166	248	44	458	10	80	112	202	947
Total	194	395	36	625	103	347	229	679	810	1020	225	2055	25	372	526	923	4282
Grand Total	390	815	83	1288	188	883	513	1584	1988	2590	589	5167	59	802	1041	1902	9941
Apprch %	30.3	63.3	6.4		11.9	55.7	32.4		38.5	50.1	11.4		3.1	42.2	54.7		
Total %	3.9	8.2	0.8	13	1.9	8.9	5.2	15.9	20	26.1	5.9	52	0.6	8.1	10.5	19.1	

	Alessandro Boulevard Southbound				Chicago Avenue Westbound				Alessandro Boulevard Northbound				Arliington Avneue Eastbound				
Start Time	Left	Thru	Rght	App. Total	Left	Thru	Rght	App. Total	Left	Thru	Rght	App. Total	Left	Thru	Rght	App. Total	Int. Total
Peak Hour Analysis From 07:00 AM to 08:45 AM - Peak 1 of 1																	
Peak Hour for Entire Intersection Begins at 07:15 AM																	
07:15 AM	45	100	9	154	19	126	62	207	281	425	**108**	814	8	112	127	247	1422
07:30 AM	56	98	**15**	169	15	131	**97**	243	330	**452**	94	**876**	12	**124**	**158**	**294**	**1582**
07:45 AM	**77**	**120**	15	**212**	**40**	**143**	82	**265**	**331**	384	97	812	**13**	122	129	264	1553
08:00 AM	50	101	7	158	27	105	53	185	204	256	63	523	4	118	147	269	1135
Total Volume	228	419	46	693	101	505	294	900	1146	1517	362	3025	37	476	561	1074	5692
% App. Total	32.9	60.5	6.6		11.2	56.1	32.7		37.9	50.1	12		3.4	44.3	52.2		
PHF	.740	.873	.767	.817	.631	.883	.758	.849	.866	.839	.838	.863	.712	.960	.888	.913	.899

Counts Unlimited Inc.
PO Box 1178
Corona, CA 92878
(951) 268-6268

City of Riverside
N/S: Alessandro Boulevard
E/W: Arlington Avenue
Weather: Sunny

File Name : RIVALARAM
Site Code : 1104611
Start Date : 3/31/2011
Page No : 2

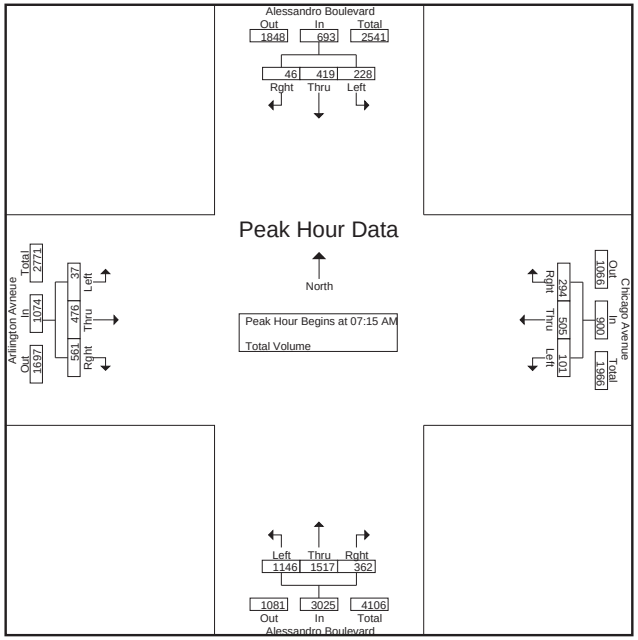

Peak Hour Analysis From 07:00 AM to 08:45 AM - Peak 1 of 1
Peak Hour for Each Approach Begins at:

	07:45 AM				07:00 AM				07:00 AM				07:15 AM			
+0 mins.	**77**	**120**	**15**	**212**	11	136	43	190	236	309	65	610	8	112	127	247
+15 mins.	50	101	7	158	19	126	62	207	281	425	**108**	814	12	**124**	**158**	**294**
+30 mins.	54	98	13	165	15	131	**97**	243	330	**452**	94	**876**	**13**	122	129	264
+45 mins.	57	119	7	183	**40**	**143**	82	**265**	**331**	384	97	812	4	118	147	269
Total Volume	238	438	42	718	85	536	284	905	1178	1570	364	3112	37	476	561	1074
% App. Total	33.1	61	5.8		9.4	59.2	31.4		37.9	50.4	11.7		3.4	44.3	52.2	
PHF	.773	.913	.700	.847	.531	.937	.732	.854	.890	.868	.843	.888	.712	.960	.888	.913

Counts Unlimited Inc.
PO Box 1178
Corona, CA 92878
(951) 268-6268

City of Riverside
N/S: Alessandro Boulevard
E/W: Arlington Avenue
Weather: Sunny

File Name : RIVALARPM
Site Code : 1104611
Start Date : 3/31/2011
Page No : 1

Groups Printed- Total Volume

	Alessandro Boulevard Southbound				Chicago Avenue Westbound				Alessandro Boulevard Northbound				Arliington Avneue Eastbound				
Start Time	Left	Thru	Rght	App. Total	Left	Thru	Rght	App. Total	Left	Thru	Rght	App. Total	Left	Thru	Rght	App. Total	Int. Total
04:00 PM	92	287	5	384	77	133	56	266	129	139	26	294	8	116	263	387	1331
04:15 PM	81	280	7	368	68	118	54	240	168	146	32	346	5	134	277	416	1370
04:30 PM	85	267	5	357	77	126	58	261	143	143	28	314	5	160	269	434	1366
04:45 PM	91	326	8	425	115	130	59	304	172	159	37	368	16	135	255	406	1503
Total	349	1160	25	1534	337	507	227	1071	612	587	123	1322	34	545	1064	1643	5570
05:00 PM	78	329	3	410	75	139	56	270	150	164	32	346	7	148	309	464	1490
05:15 PM	101	362	3	466	112	181	67	360	177	179	41	397	2	152	276	430	1653
05:30 PM	80	319	8	407	109	153	67	329	154	157	37	348	5	133	273	411	1495
05:45 PM	83	337	5	425	80	113	71	264	164	191	25	380	8	144	257	409	1478
Total	342	1347	19	1708	376	586	261	1223	645	691	135	1471	22	577	1115	1714	6116
Grand Total	691	2507	44	3242	713	1093	488	2294	1257	1278	258	2793	56	1122	2179	3357	11686
Apprch %	21.3	77.3	1.4		31.1	47.6	21.3		45	45.8	9.2		1.7	33.4	64.9		
Total %	5.9	21.5	0.4	27.7	6.1	9.4	4.2	19.6	10.8	10.9	2.2	23.9	0.5	9.6	18.6	28.7	

	Alessandro Boulevard Southbound				Chicago Avenue Westbound				Alessandro Boulevard Northbound				Arliington Avneue Eastbound				
Start Time	Left	Thru	Rght	App. Total	Left	Thru	Rght	App. Total	Left	Thru	Rght	App. Total	Left	Thru	Rght	App. Total	Int. Total
Peak Hour Analysis From 04:00 PM to 05:45 PM - Peak 1 of 1																	
Peak Hour for Entire Intersection Begins at 04:45 PM																	
04:45 PM	91	326	**8**	425	**115**	130	59	304	172	159	37	368	**16**	135	255	406	1503
05:00 PM	78	329	3	410	75	139	56	270	150	164	32	346	7	148	**309**	**464**	1490
05:15 PM	**101**	**362**	3	**466**	112	**181**	**67**	**360**	**177**	**179**	**41**	**397**	2	**152**	276	430	**1653**
05:30 PM	80	319	8	407	109	153	67	329	154	157	37	348	5	133	273	411	1495
Total Volume	350	1336	22	1708	411	603	249	1263	653	659	147	1459	30	568	1113	1711	6141
% App. Total	20.5	78.2	1.3		32.5	47.7	19.7		44.8	45.2	10.1		1.8	33.2	65		
PHF	.866	.923	.688	.916	.893	.833	.929	.877	.922	.920	.896	.919	.469	.934	.900	.922	.929

Counts Unlimited Inc.
PO Box 1178
Corona, CA 92878
(951) 268-6268

City of Riverside
N/S: Alessandro Boulevard
E/W: Arlington Avenue
Weather: Sunny

File Name : RIVALARPM
Site Code : 1104611
Start Date : 3/31/2011
Page No : 2

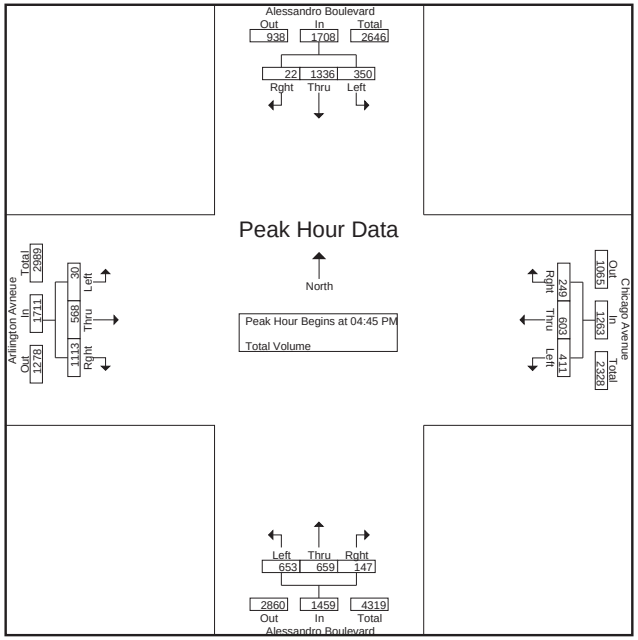

Peak Hour Analysis From 04:00 PM to 05:45 PM - Peak 1 of 1
Peak Hour for Each Approach Begins at:

	04:45 PM				04:45 PM				05:00 PM				04:30 PM			
+0 mins.	91	326	**8**	425	**115**	130	59	304	150	164	32	346	5	**160**	269	434
+15 mins.	78	329	3	410	75	139	56	270	**177**	179	**41**	**397**	**16**	135	255	406
+30 mins.	**101**	**362**	3	**466**	112	**181**	**67**	**360**	154	157	37	348	7	148	**309**	**464**
+45 mins.	80	319	8	407	109	153	67	329	164	**191**	25	380	2	152	276	430
Total Volume	350	1336	22	1708	411	603	249	1263	645	691	135	1471	30	595	1109	1734
% App. Total	20.5	78.2	1.3		32.5	47.7	19.7		43.8	47	9.2		1.7	34.3	64	
PHF	.866	.923	.688	.916	.893	.833	.929	.877	.911	.904	.823	.926	.469	.930	.897	.934

Counts Unlimited, Inc.
PO Box 1178
Corona, CA 92878
(951) 268-6268

City of Riverside
N/S: Alessandro Boulevard
E/W: Overlook Parkway / Canyon Crest Dr
Weather: Sunny

File Name : RIVALOVAM
Site Code : 11046095
Start Date : 3/31/2011
Page No : 1

Groups Printed- Total Volume

	Alessandro Boulevard Southbound				Canyon Crest Drive Westbound				Alessandro Boulevard Northbound				Overlook Parkway Eastbound				
Start Time	Left	Thru	Right	App. Total	Left	Thru	Right	App. Total	Left	Thru	Right	App. Total	Left	Thru	Right	App. Total	Int. Total
07:00 AM	8	205	0	213	54	1	20	75	2	566	158	726	1	0	5	6	1020
07:15 AM	12	211	1	224	70	1	18	89	3	702	213	918	6	2	11	19	1250
07:30 AM	3	242	0	245	70	8	26	104	0	784	208	992	8	6	11	25	1366
07:45 AM	5	245	3	253	47	5	20	72	5	561	198	764	4	8	2	14	1103
Total	28	903	4	935	241	15	84	340	10	2613	777	3400	19	16	29	64	4739
08:00 AM	5	232	4	241	45	7	24	76	3	469	171	643	2	14	7	23	983
08:15 AM	5	236	3	244	51	4	15	70	2	498	155	655	4	5	5	14	983
08:30 AM	6	241	5	252	47	7	19	73	4	379	143	526	3	3	4	10	861
08:45 AM	3	227	0	230	42	3	16	61	2	381	115	498	6	1	3	10	799
Total	19	936	12	967	185	21	74	280	11	1727	584	2322	15	23	19	57	3626
Grand Total	47	1839	16	1902	426	36	158	620	21	4340	1361	5722	34	39	48	121	8365
Apprch %	2.5	96.7	0.8		68.7	5.8	25.5		0.4	75.8	23.8		28.1	32.2	39.7		
Total %	0.6	22	0.2	22.7	5.1	0.4	1.9	7.4	0.3	51.9	16.3	68.4	0.4	0.5	0.6	1.4	

	Alessandro Boulevard Southbound				Canyon Crest Drive Westbound				Alessandro Boulevard Northbound				Overlook Parkway Eastbound				
Start Time	Left	Thru	Right	App. Total	Left	Thru	Right	App. Total	Left	Thru	Right	App. Total	Left	Thru	Right	App. Total	Int. Total
Peak Hour Analysis From 07:00 AM to 08:45 AM - Peak 1 of 1																	
Peak Hour for Entire Intersection Begins at 07:00 AM																	
07:00 AM	8	205	0	213	54	1	20	75	2	566	158	726	1	0	5	6	1020
07:15 AM	**12**	211	1	224	**70**	1	18	89	3	702	**213**	918	6	2	**11**	19	1250
07:30 AM	3	242	0	245	70	**8**	**26**	**104**	0	**784**	208	**992**	**8**	6	11	**25**	**1366**
07:45 AM	5	**245**	**3**	**253**	47	5	20	72	**5**	561	198	764	4	**8**	2	14	1103
Total Volume	28	903	4	935	241	15	84	340	10	2613	777	3400	19	16	29	64	4739
% App. Total	3	96.6	0.4		70.9	4.4	24.7		0.3	76.9	22.9		29.7	25	45.3		
PHF	.583	.921	.333	.924	.861	.469	.808	.817	.500	.833	.912	.857	.594	.500	.659	.640	.867

Counts Unlimited, Inc.
PO Box 1178
Corona, CA 92878
(951) 268-6268

City of Riverside
N/S: Alessandro Boulevard
E/W: Overlook Parkway / Canyon Crest Dr
Weather: Sunny

File Name : RIVALOVAM
Site Code : 11046095
Start Date : 3/31/2011
Page No : 2

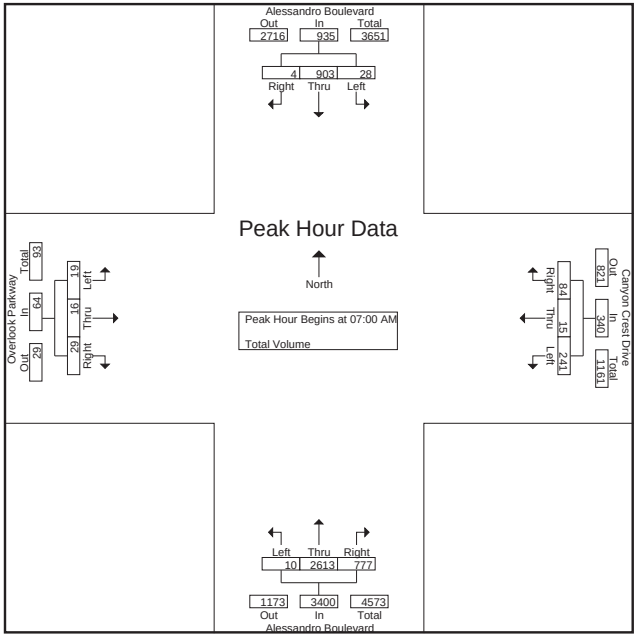

Peak Hour Analysis From 07:00 AM to 08:45 AM - Peak 1 of 1

Peak Hour for Each Approach Begins at:

	07:45 AM				07:15 AM				07:00 AM				07:15 AM			
0 mins.	5	**245**	3	**253**	**70**	1	18	89	2	566	158	726	6	2	**11**	19
15 mins.	5	232	4	241	70	**8**	**26**	**104**	3	702	**213**	918	**8**	6	11	**25**
30 mins.	5	236	3	244	47	5	20	72	0	**784**	208	**992**	4	8	2	14
45 mins.	**6**	241	**5**	252	45	7	24	76	**5**	561	198	764	2	**14**	7	23
Total Volume	21	954	15	990	232	21	88	341	10	2613	777	3400	20	30	31	81
% App. Total	2.1	96.4	1.5		68	6.2	25.8		0.3	76.9	22.9		24.7	37	38.3	
PHF	.875	.973	.750	.978	.829	.656	.846	.820	.500	.833	.912	.857	.625	.536	.705	.810

Counts Unlimited, Inc.
PO Box 1178
Corona, CA 92878
(951) 268-6268

City of Riverside
N/S: Alessandro Boulevard
E/W: Overlook Parkway / Canyon Crest Dr
Weather: Sunny

File Name : RIVALOVPM
Site Code : 11046095
Start Date : 3/31/2011
Page No : 1

Groups Printed- Total Volume

	Alessandro Boulevard Southbound				Canyon Crest Drive Westbound				Alessandro Boulevard Northbound				Overlook Parkway Eastbound				
Start Time	Left	Thru	Right	App. Total	Left	Thru	Right	App. Total	Left	Thru	Right	App. Total	Left	Thru	Right	App. Total	Int. Total
04:00 PM	12	524	3	539	98	32	7	137	1	268	74	343	1	2	0	3	1022
04:15 PM	11	540	3	554	134	3	9	146	0	318	63	381	10	26	0	36	1117
04:30 PM	13	559	2	574	145	2	4	151	1	330	97	428	3	5	1	9	1162
04:45 PM	13	601	5	619	120	3	6	129	0	348	95	443	7	0	0	7	1198
Total	49	2224	13	2286	497	40	26	563	2	1264	329	1595	21	33	1	55	4499
05:00 PM	30	607	3	640	141	4	9	154	3	327	114	444	4	1	3	8	1246
05:15 PM	22	724	4	750	185	4	11	200	1	309	97	407	4	2	1	7	1364
05:30 PM	14	615	0	629	171	0	10	181	0	311	99	410	1	4	0	5	1225
05:45 PM	30	563	5	598	160	0	9	169	1	300	114	415	1	1	1	3	1185
Total	96	2509	12	2617	657	8	39	704	5	1247	424	1676	10	8	5	23	5020
Grand Total	145	4733	25	4903	1154	48	65	1267	7	2511	753	3271	31	41	6	78	9519
Apprch %	3	96.5	0.5		91.1	3.8	5.1		0.2	76.8	23		39.7	52.6	7.7		
Total %	1.5	49.7	0.3	51.5	12.1	0.5	0.7	13.3	0.1	26.4	7.9	34.4	0.3	0.4	0.1	0.8	

	Alessandro Boulevard Southbound				Canyon Crest Drive Westbound				Alessandro Boulevard Northbound				Overlook Parkway Eastbound				
Start Time	Left	Thru	Right	App. Total	Left	Thru	Right	App. Total	Left	Thru	Right	App. Total	Left	Thru	Right	App. Total	Int. Total
Peak Hour Analysis From 04:00 PM to 05:45 PM - Peak 1 of 1																	
Peak Hour for Entire Intersection Begins at 04:45 PM																	
04:45 PM	13	601	**5**	619	120	3	6	129	0	**348**	95	443	**7**	0	0	7	1198
05:00 PM	**30**	607	3	640	141	**4**	9	154	**3**	327	**114**	**444**	4	1	**3**	**8**	1246
05:15 PM	22	**724**	4	**750**	**185**	4	**11**	**200**	1	309	97	407	4	2	1	7	**1364**
05:30 PM	14	615	0	629	171	0	10	181	0	311	99	410	1	**4**	0	5	1225
Total Volume	79	2547	12	2638	617	11	36	664	4	1295	405	1704	16	7	4	27	5033
% App. Total	3	96.6	0.5		92.9	1.7	5.4		0.2	76	23.8		59.3	25.9	14.8		
PHF	.658	.879	.600	.879	.834	.688	.818	.830	.333	.930	.888	.959	.571	.438	.333	.844	.922

Counts Unlimited, Inc.
PO Box 1178
Corona, CA 92878
(951) 268-6268

City of Riverside
N/S: Alessandro Boulevard
E/W: Overlook Parkway / Canyon Crest Dr
Weather: Sunny

File Name : RIVALOVPM
Site Code : 11046095
Start Date : 3/31/2011
Page No : 2

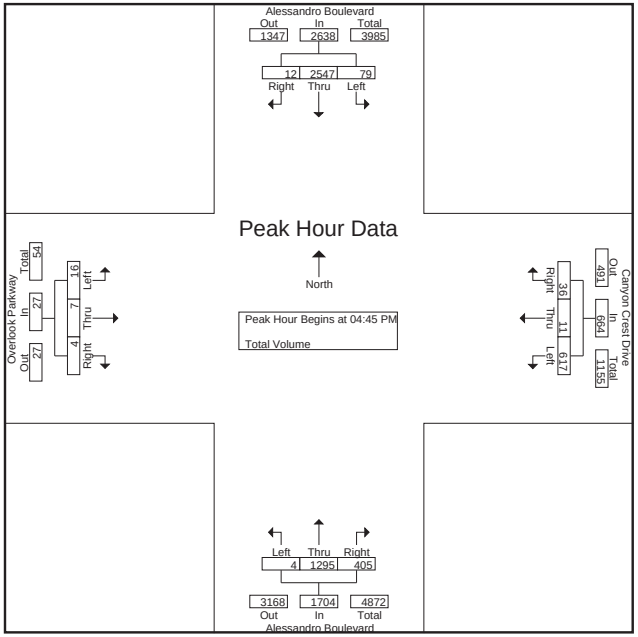

Peak Hour Analysis From 04:00 PM to 05:45 PM - Peak 1 of 1

Peak Hour for Each Approach Begins at:

	04:45 PM				05:00 PM				04:30 PM				04:15 PM			
0 mins.	13	601	**5**	619	141	**4**	9	154	1	330	97	428	**10**	**26**	0	**36**
15 mins.	**30**	607	3	640	**185**	4	**11**	**200**	0	**348**	95	443	3	5	1	9
30 mins.	22	**724**	4	**750**	171	0	10	181	**3**	327	**114**	**444**	7	0	0	7
45 mins.	14	615	0	629	160	0	9	169	1	309	97	407	4	1	**3**	8
Total Volume	79	2547	12	2638	657	8	39	704	5	1314	403	1722	24	32	4	60
% App. Total	3	96.6	0.5		93.3	1.1	5.5		0.3	76.3	23.4		40	53.3	6.7	
PHF	.658	.879	.600	.879	.888	.500	.886	.880	.417	.944	.884	.970	.600	.308	.333	.417

Counts Unlimited, Inc.
PO Box 1178
Corona, CA 92878
(951) 268-6268

City of Riverside
N/S: Trautwein Road
E/W: Alessandro Boulevard
Weather: Sunny

File Name : RIVTRALAM
Site Code : 11046098
Start Date : 3/31/2011
Page No : 1

Groups Printed- Total Volume

	Alessandro Boulevard Westbound			Trautwein Road Northbound			Alessandro Boulevard Eastbound			
Start Time	Left	Thru	App. Total	Left	Right	App. Total	Thru	Right	App. Total	Int. Total
07:00 AM	19	362	381	374	26	400	131	143	274	1055
07:15 AM	28	413	441	455	32	487	148	149	297	1225
07:30 AM	35	520	555	490	27	517	163	157	320	1392
07:45 AM	22	347	369	399	41	440	195	133	328	1137
Total	104	1642	1746	1718	126	1844	637	582	1219	4809
08:00 AM	26	296	322	331	48	379	192	113	305	1006
08:15 AM	27	267	294	332	39	371	168	114	282	947
08:30 AM	31	254	285	304	55	359	188	116	304	948
08:45 AM	16	217	233	272	34	306	163	112	275	814
Total	100	1034	1134	1239	176	1415	711	455	1166	3715
Grand Total	204	2676	2880	2957	302	3259	1348	1037	2385	8524
Apprch %	7.1	92.9		90.7	9.3		56.5	43.5		
Total %	2.4	31.4	33.8	34.7	3.5	38.2	15.8	12.2	28	

	Alessandro Boulevard Westbound			Trautwein Road Northbound			Alessandro Boulevard Eastbound			
Start Time	Left	Thru	App. Total	Left	Right	App. Total	Thru	Right	App. Total	Int. Total
Peak Hour Analysis From 07:00 AM to 08:45 AM - Peak 1 of 1										
Peak Hour for Entire Intersection Begins at 07:00 AM										
07:00 AM	19	362	381	374	26	400	131	143	274	1055
07:15 AM	28	413	441	455	32	487	148	149	297	1225
07:30 AM	**35**	**520**	**555**	**490**	27	**517**	163	**157**	320	**1392**
07:45 AM	22	347	369	399	**41**	440	**195**	133	**328**	1137
Total Volume	104	1642	1746	1718	126	1844	637	582	1219	4809
% App. Total	6	94		93.2	6.8		52.3	47.7		
PHF	.743	.789	.786	.877	.768	.892	.817	.927	.929	.864

Counts Unlimited, Inc.
PO Box 1178
Corona, CA 92878
(951) 268-6268

City of Riverside
N/S: Trautwein Road
E/W: Alessandro Boulevard
Weather: Sunny

File Name : RIVTRALAM
Site Code : 11046098
Start Date : 3/31/2011
Page No : 2

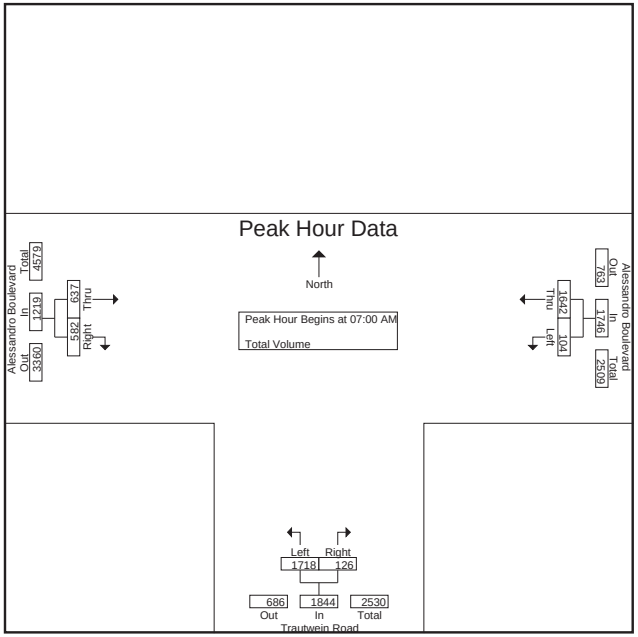

Peak Hour Analysis From 07:00 AM to 08:45 AM - Peak 1 of 1

Peak Hour for Each Approach Begins at:

	07:00 AM			07:00 AM			07:15 AM		
0 mins.	19	362	381	374	26	400	148	149	297
15 mins.	28	413	441	455	32	487	163	**157**	320
30 mins.	**35**	**520**	**555**	**490**	27	**517**	**195**	133	**328**
45 mins.	22	347	369	399	**41**	440	192	113	305
Total Volume	104	1642	1746	1718	126	1844	698	552	1250
% App. Total	6	94		93.2	6.8		55.8	44.2	
PHF	.743	.789	.786	.877	.768	.892	.895	.879	.953

Counts Unlimited, Inc.
PO Box 1178
Corona, CA 92878
(951) 268-6268

City of Riverside
N/S: Trautwein Road
E/W: Alessandro Boulevard
Weather: Sunny

File Name : RIVTRALPM
Site Code : 11046098
Start Date : 3/31/2011
Page No : 1

Groups Printed- Total Volume

	Alessandro Boulevard Westbound			Trautwein Road Northbound			Alessandro Boulevard Eastbound			
Start Time	Left	Thru	App. Total	Left	Right	App. Total	Thru	Right	App. Total	Int. Total
04:00 PM	35	221	256	145	36	181	366	245	611	1048
04:15 PM	52	220	272	116	43	159	414	252	666	1097
04:30 PM	30	258	288	168	41	209	400	265	665	1162
04:45 PM	54	236	290	156	44	200	399	298	697	1187
Total	171	935	1106	585	164	749	1579	1060	2639	4494
05:00 PM	61	274	335	150	29	179	453	284	737	1251
05:15 PM	59	273	332	175	40	215	483	345	828	1375
05:30 PM	88	239	327	197	50	247	473	304	777	1351
05:45 PM	67	226	293	139	32	171	408	332	740	1204
Total	275	1012	1287	661	151	812	1817	1265	3082	5181
Grand Total	446	1947	2393	1246	315	1561	3396	2325	5721	9675
Apprch %	18.6	81.4		79.8	20.2		59.4	40.6		
Total %	4.6	20.1	24.7	12.9	3.3	16.1	35.1	24	59.1	

	Alessandro Boulevard Westbound			Trautwein Road Northbound			Alessandro Boulevard Eastbound			
Start Time	Left	Thru	App. Total	Left	Right	App. Total	Thru	Right	App. Total	Int. Total
Peak Hour Analysis From 04:00 PM to 05:45 PM - Peak 1 of 1										
Peak Hour for Entire Intersection Begins at 05:00 PM										
05:00 PM	61	**274**	**335**	150	29	179	453	284	737	1251
05:15 PM	59	273	332	175	40	215	**483**	**345**	**828**	**1375**
05:30 PM	**88**	239	327	**197**	**50**	**247**	473	304	777	1351
05:45 PM	67	226	293	139	32	171	408	332	740	1204
Total Volume	275	1012	1287	661	151	812	1817	1265	3082	5181
% App. Total	21.4	78.6		81.4	18.6		59	41		
PHF	.781	.923	.960	.839	.755	.822	.940	.917	.931	.942

Counts Unlimited, Inc.
PO Box 1178
Corona, CA 92878
(951) 268-6268

City of Riverside
N/S: Trautwein Road
E/W: Alessandro Boulevard
Weather: Sunny

File Name : RIVTRALPM
Site Code : 11046098
Start Date : 3/31/2011
Page No : 2

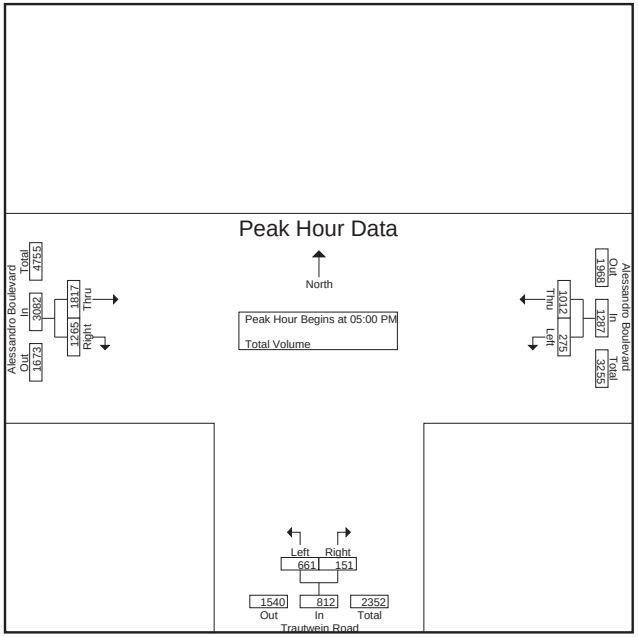

Peak Hour Analysis From 04:00 PM to 05:45 PM - Peak 1 of 1

Peak Hour for Each Approach Begins at:

	05:00 PM			04:45 PM			05:00 PM		
0 mins.	61	**274**	**335**	156	44	200	453	284	737
15 mins.	59	273	332	150	29	179	**483**	**345**	**828**
30 mins.	**88**	239	327	175	40	215	473	304	777
45 mins.	67	226	293	**197**	**50**	**247**	408	332	740
Total Volume	275	1012	1287	678	163	841	1817	1265	3082
% App. Total	21.4	78.6		80.6	19.4		59	41	
PHF	.781	.923	.960	.860	.815	.851	.940	.917	.931

Counts Unlimited Inc.
PO Box 1178
Corona, CA 92878
(951) 268-6268

City of Riverside
N/S: Crystal View Terrace
E/W: Overlook Parkway
Weather: Sunny

File Name : RIVCVOLAM
Site Code : 11046061
Start Date : 3/31/2011
Page No : 1

Most Eastbound lefts were U-Turns

Groups Printed- Total Volume

	Crystal View Terrace Southbound				Overlook Parkway Westbound				Crystal View Terrace Northbound				Overlook Parkway Eastbound				
Start Time	Left	Thru	Right	App. Total	Left	Thru	Right	App. Total	Left	Thru	Right	App. Total	Left	Thru	Right	App. Total	Int. Total
07:00 AM	0	0	0	0	0	0	0	0	2	0	0	2	1	0	1	2	4
07:15 AM	0	0	0	0	0	0	0	0	0	0	0	0	0	0	0	0	0
07:30 AM	0	0	0	0	0	0	0	0	1	0	0	1	2	0	1	3	4
07:45 AM	0	0	0	0	0	0	0	0	2	0	0	2	0	0	1	1	3
Total	0	0	0	0	0	0	0	0	5	0	0	5	3	0	3	6	11
08:00 AM	0	0	0	0	0	1	0	1	1	0	0	1	0	0	1	1	3
08:15 AM	0	0	0	0	0	0	0	0	3	0	0	3	0	0	1	1	4
08:30 AM	0	0	0	0	0	0	0	0	0	0	0	0	2	0	3	5	5
08:45 AM	0	0	1	1	0	0	0	0	2	0	0	2	0	0	1	1	4
Total	0	0	1	1	0	1	0	1	6	0	0	6	2	0	6	8	16
Grand Total	0	0	1	1	0	1	0	1	11	0	0	11	5	0	9	14	27
Apprch %	0	0	100		0	100	0		100	0	0		35.7	0	64.3		
Total %	0	0	3.7	3.7	0	3.7	0	3.7	40.7	0	0	40.7	18.5	0	33.3	51.9	

	Crystal View Terrace Southbound				Overlook Parkway Westbound				Crystal View Terrace Northbound				Overlook Parkway Eastbound				
Start Time	Left	Thru	Right	App. Total	Left	Thru	Right	App. Total	Left	Thru	Right	App. Total	Left	Thru	Right	App. Total	Int. Total
Peak Hour Analysis From 07:00 AM to 08:45 AM - Peak 1 of 1																	
Peak Hour for Entire Intersection Begins at 08:00 AM																	
08:00 AM	0	0	0	0	0	**1**	0	**1**	1	0	0	1	0	0	1	1	3
08:15 AM	0	0	0	0	0	0	0	0	**3**	0	0	**3**	0	0	1	1	4
08:30 AM	0	0	0	0	0	0	0	0	0	0	0	0	**2**	0	**3**	**5**	**5**
08:45 AM	0	0	**1**	**1**	0	0	0	0	2	0	0	2	0	0	1	1	4
Total Volume	0	0	1	1	0	1	0	1	6	0	0	6	2	0	6	8	16
% App. Total	0	0	100		0	100	0		100	0	0		25	0	75		
PHF	.000	.000	.250	.250	.000	.250	.000	.250	.500	.000	.000	.500	.250	.000	.500	.400	.800

Counts Unlimited Inc.
PO Box 1178
Corona, CA 92878
(951) 268-6268

City of Riverside
N/S: Crystal View Terrace
E/W: Overlook Parkway
Weather: Sunny

File Name : RIVCVOLAM
Site Code : 11046061
Start Date : 3/31/2011
Page No : 2

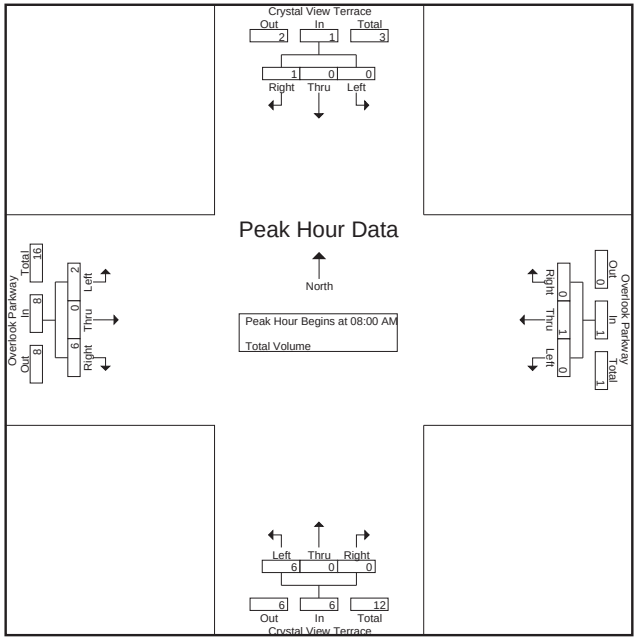

Peak Hour Analysis From 07:00 AM to 08:45 AM - Peak 1 of 1
Peak Hour for Each Approach Begins at:

	08:00 AM				07:15 AM				07:30 AM				07:45 AM			
+0 mins.	0	0	0	0	0	0	0	0	1	0	0	1	0	0	1	1
+15 mins.	0	0	0	0	0	0	0	0	2	0	0	2	0	0	1	1
+30 mins.	0	0	0	0	0	0	0	0	1	0	0	1	0	0	1	1
+45 mins.	0	0	**1**	**1**	0	**1**	0	**1**	**3**	0	0	**3**	**2**	0	**3**	**5**
Total Volume	0	0	1	1	0	1	0	1	7	0	0	7	2	0	6	8
% App. Total	0	0	100		0	100	0		100	0	0		25	0	75	
PHF	.000	.000	.250	.250	.000	.250	.000	.250	.583	.000	.000	.583	.250	.000	.500	.400

Counts Unlimited Inc.
PO Box 1178
Corona, CA 92878
(951) 268-6268

City of Riverside
N/S: Crystal View Terrace
E/W: Overlook Parkway
Weather: Sunny

File Name : RIVCVOLPM
Site Code : 11046061
Start Date : 3/31/2011
Page No : 1

All Eastbound lefts were U-Turns

Groups Printed- Total Volume

	Crystal View Terrace Southbound				Overlook Parkway Westbound				Crystal View Terrace Northbound				Overlook Parkway Eastbound				
Start Time	Left	Thru	Right	App. Total	Left	Thru	Right	App. Total	Left	Thru	Right	App. Total	Left	Thru	Right	App. Total	Int. Total
04:00 PM	0	0	0	0	0	0	0	0	1	0	0	1	0	0	1	1	2
04:15 PM	0	0	0	0	0	0	0	0	0	0	0	0	0	0	0	0	0
04:30 PM	0	0	0	0	0	0	0	0	1	0	0	1	0	0	0	0	1
04:45 PM	0	0	0	0	0	0	0	0	2	0	0	2	1	0	3	4	6
Total	0	0	0	0	0	0	0	0	4	0	0	4	1	0	4	5	9
05:00 PM	0	0	0	0	0	0	0	0	2	0	0	2	1	0	3	4	6
05:15 PM	0	0	0	0	0	0	0	0	0	0	0	0	1	0	0	1	1
05:30 PM	0	0	0	0	0	0	0	0	0	0	0	0	1	0	0	1	1
05:45 PM	0	0	0	0	0	0	0	0	1	0	0	1	0	0	1	1	2
Total	0	0	0	0	0	0	0	0	3	0	0	3	3	0	4	7	10
Grand Total	0	0	0	0	0	0	0	0	7	0	0	7	4	0	8	12	19
Apprch %	0	0	0		0	0	0		100	0	0		33.3	0	66.7		
Total %	0	0	0	0	0	0	0	0	36.8	0	0	36.8	21.1	0	42.1	63.2	

	Crystal View Terrace Southbound				Overlook Parkway Westbound				Crystal View Terrace Northbound				Overlook Parkway Eastbound				
Start Time	Left	Thru	Right	App. Total	Left	Thru	Right	App. Total	Left	Thru	Right	App. Total	Left	Thru	Right	App. Total	Int. Total
Peak Hour Analysis From 04:00 PM to 05:45 PM - Peak 1 of 1																	
Peak Hour for Entire Intersection Begins at 04:30 PM																	
04:30 PM	0	0	0	0	0	0	0	0	1	0	0	1	0	0	0	0	1
04:45 PM	0	0	0	0	0	0	0	0	**2**	0	0	**2**	**1**	0	**3**	**4**	**6**
05:00 PM	0	0	0	0	0	0	0	0	2	0	0	2	1	0	3	4	6
05:15 PM	0	0	0	0	0	0	0	0	0	0	0	0	1	0	0	1	1
Total Volume	0	0	0	0	0	0	0	0	5	0	0	5	3	0	6	9	14
% App. Total	0	0	0		0	0	0		100	0	0		33.3	0	66.7		
PHF	.000	.000	.000	.000	.000	.000	.000	.000	.625	.000	.000	.625	.750	.000	.500	.563	.583

Counts Unlimited Inc.
PO Box 1178
Corona, CA 92878
(951) 268-6268

City of Riverside
N/S: Crystal View Terrace
E/W: Overlook Parkway
Weather: Sunny

File Name : RIVCVOLPM
Site Code : 11046061
Start Date : 3/31/2011
Page No : 2

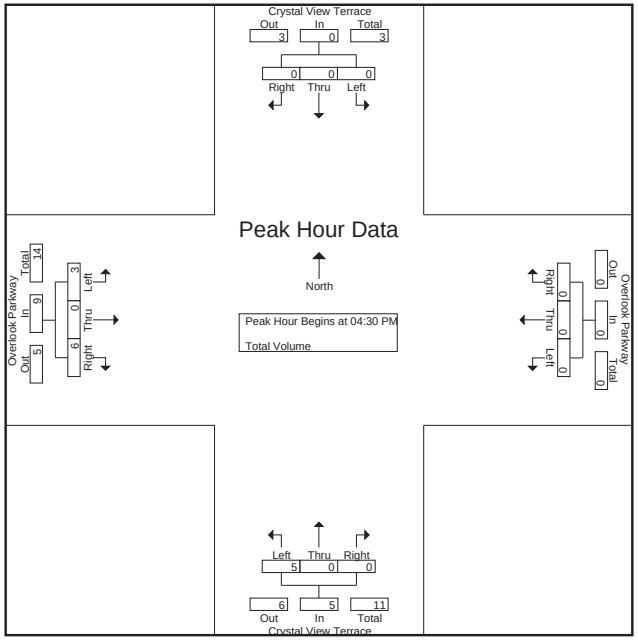

Peak Hour Analysis From 04:00 PM to 05:45 PM - Peak 1 of 1
Peak Hour for Each Approach Begins at:

	04:00 PM				04:00 PM				04:15 PM				04:45 PM			
+0 mins.	0	0	0	0	0	0	0	0	0	0	0	0	**1**	0	**3**	**4**
+15 mins.	0	0	0	0	0	0	0	0	1	0	0	1	1	0	3	4
+30 mins.	0	0	0	0	0	0	0	0	**2**	0	0	**2**	1	0	0	1
+45 mins.	0	0	0	0	0	0	0	0	2	0	0	2	1	0	0	1
Total Volume	0	0	0	0	0	0	0	0	5	0	0	5	4	0	6	10
% App. Total	0	0	0		0	0	0		100	0	0		40	0	60	
PHF	.000	.000	.000	.000	.000	.000	.000	.000	.625	.000	.000	.625	1.000	.000	.500	.625

Counts Unlimited Inc.
PO Box 1178
Corona, CA 92878
(951) 268-6268

City of Riverside
N/S: Kingdom Drive
E/W: Overlook Parkway
Weather: Sunny

File Name : RIVKIOLAM
Site Code : 11046155
Start Date : 3/31/2011
Page No : 1

Groups Printed- Total Volume

	ingdom Drive Southbound				Overlook Parkway Westbound				ingdom Drive Northbound				Overlook Parkway Eastbound				
Start Time	Left	Thru	Right	App. Total	Left	Thru	Right	App. Total	Left	Thru	Right	App. Total	Left	Thru	Right	App. Total	Int. Total
07:00 AM	0	0	0	0	2	4	0	6	6	1	0	7	0	4	1	5	18
07:15 AM	0	0	0	0	0	0	0	0	6	0	0	6	1	0	2	3	9
07:30 AM	0	0	0	0	0	2	0	2	7	0	1	8	0	2	4	6	16
07:45 AM	0	0	0	0	1	2	0	3	5	0	0	5	0	1	2	3	11
Total	0	0	0	0	3	8	0	11	24	1	1	26	1	7	9	17	54
08:00 AM	0	0	0	0	0	4	0	4	9	0	2	11	1	0	8	9	24
08:15 AM	0	0	0	0	1	2	0	3	2	0	0	2	0	3	5	8	13
08:30 AM	0	0	0	0	0	5	0	5	4	0	0	4	0	5	4	9	18
08:45 AM	0	0	0	0	0	3	0	3	4	0	0	4	0	4	4	8	15
Total	0	0	0	0	1	14	0	15	19	0	2	21	1	12	21	34	70
Grand Total	0	0	0	0	4	22	0	26	43	1	3	47	2	19	30	51	124
Apprch %	0	0	0		15.4	84.6	0		91.5	2.1	6.4		3.9	37.3	58.8		
Total %	0	0	0	0	3.2	17.7	0	21	34.7	0.8	2.4	37.9	1.6	15.3	24.2	41.1	

	ingdom Drive Southbound				Overlook Parkway Westbound				ingdom Drive Northbound				Overlook Parkway Eastbound				
Start Time	Left	Thru	Right	App. Total	Left	Thru	Right	App. Total	Left	Thru	Right	App. Total	Left	Thru	Right	App. Total	Int. Total
Peak Hour Analysis From 07:00 AM to 08:45 AM - Peak 1 of 1																	
Peak Hour for Entire Intersection Begins at 08:00 AM																	
08:00 AM	0	0	0	0	0	4	0	4	**9**	0	**2**	**11**	**1**	0	**8**	**9**	**24**
08:15 AM	0	0	0	0	**1**	2	0	3	2	0	0	2	0	3	5	8	13
08:30 AM	0	0	0	0	0	**5**	0	**5**	4	0	0	4	0	**5**	4	9	18
08:45 AM	0	0	0	0	0	3	0	3	4	0	0	4	0	4	4	8	15
Total Volume	0	0	0	0	1	14	0	15	19	0	2	21	1	12	21	34	70
% App. Total	0	0	0		6.7	93.3	0		90.5	0	9.5		2.9	35.3	61.8		
PHF	.000	.000	.000	.000	.250	.700	.000	.750	.528	.000	.250	.477	.250	.600	.656	.944	.729

Counts Unlimited Inc.
PO Box 1178
Corona, CA 92878
(951) 268-6268

City of Riverside
N/S: Kingdom Drive
E/W: Overlook Parkway
Weather: Sunny

File Name : RIVKIOLAM
Site Code : 11046155
Start Date : 3/31/2011
Page No : 2

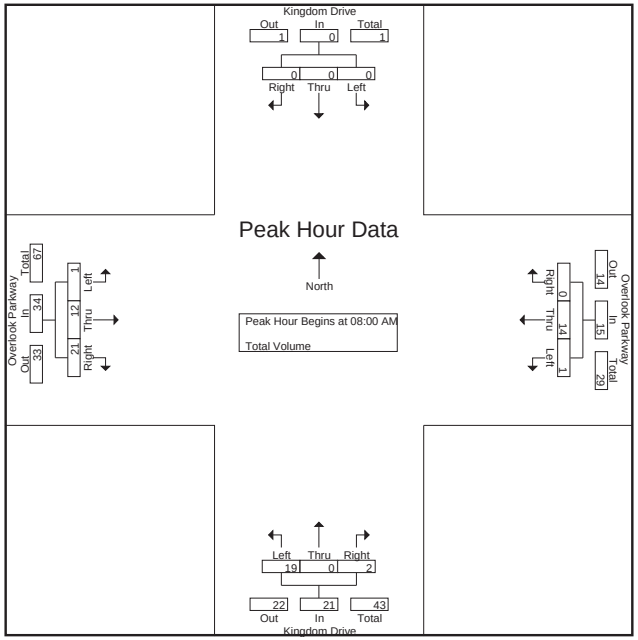

Peak Hour Analysis From 07:00 AM to 08:45 AM - Peak 1 of 1

Peak Hour for Each Approach Begins at:

	07:00 AM				07:45 AM				07:15 AM				08:00 AM			
0 mins.	0	0	0	0	**1**	2	0	3	6	0	0	6	**1**	0	**8**	**9**
15 mins.	0	0	0	0	0	4	0	4	7	0	1	8	0	3	5	8
30 mins.	0	0	0	0	1	2	0	3	5	0	0	5	0	**5**	4	9
45 mins.	0	0	0	0	0	**5**	0	**5**	**9**	0	**2**	**11**	0	4	4	8
Total Volume	0	0	0	0	2	13	0	15	27	0	3	30	1	12	21	34
% App. Total	0	0	0		13.3	86.7	0		90	0	10		2.9	35.3	61.8	
PHF	.000	.000	.000	.000	.500	.650	.000	.750	.750	.000	.375	.682	.250	.600	.656	.944

Counts Unlimited Inc.
PO Box 1178
Corona, CA 92878
(951) 268-6268

City of Riverside
N/S: Kingdom Drive
E/W: Overlook Parkway
Weather: Sunny

File Name : RIVKIOLPM
Site Code : 11046155
Start Date : 3/31/2011
Page No : 1

Groups Printed- Total Volume

	Kingdom Drive Southbound				Overlook Parkway Westbound				Kingdom Drive Northbound				Overlook Parkway Eastbound				
Start Time	Left	Thru	Right	App. Total	Left	Thru	Right	App. Total	Left	Thru	Right	App. Total	Left	Thru	Right	App. Total	Int. Total
04:00 PM	0	0	0	0	1	2	0	3	4	0	0	4	1	1	1	3	10
04:15 PM	0	0	0	0	0	0	0	0	1	0	0	1	0	1	6	7	8
04:30 PM	0	0	0	0	0	1	0	1	0	0	1	1	0	1	7	8	10
04:45 PM	0	0	0	0	1	2	0	3	2	0	0	2	0	3	3	6	11
Total	0	0	0	0	2	5	0	7	7	0	1	8	1	6	17	24	39
05:00 PM	0	0	0	0	0	2	0	2	3	0	2	5	0	2	1	3	10
05:15 PM	0	0	0	0	0	3	0	3	3	0	1	4	0	1	9	10	17
05:30 PM	0	0	0	0	0	1	0	1	6	0	0	6	1	3	4	8	15
05:45 PM	0	0	0	0	0	1	0	1	3	0	0	3	0	4	4	8	12
Total	0	0	0	0	0	7	0	7	15	0	3	18	1	10	18	29	54
Grand Total	0	0	0	0	2	12	0	14	22	0	4	26	2	16	35	53	93
Apprch %	0	0	0		14.3	85.7	0		84.6	0	15.4		3.8	30.2	66		
Total %	0	0	0	0	2.2	12.9	0	15.1	23.7	0	4.3	28	2.2	17.2	37.6	57	

	Kingdom Drive Southbound				Overlook Parkway Westbound				Kingdom Drive Northbound				Overlook Parkway Eastbound				
Start Time	Left	Thru	Right	App. Total	Left	Thru	Right	App. Total	Left	Thru	Right	App. Total	Left	Thru	Right	App. Total	Int. Total
Peak Hour Analysis From 04:00 PM to 05:45 PM - Peak 1 of 1																	
Peak Hour for Entire Intersection Begins at 05:00 PM																	
05:00 PM	0	0	0	0	0	2	0	2	3	0	**2**	5	0	2	1	3	10
05:15 PM	0	0	0	0	0	**3**	0	**3**	3	0	1	4	0	1	**9**	**10**	**17**
05:30 PM	0	0	0	0	0	1	0	1	**6**	0	0	**6**	**1**	3	4	8	15
05:45 PM	0	0	0	0	0	1	0	1	3	0	0	3	0	**4**	4	8	12
Total Volume	0	0	0	0	0	7	0	7	15	0	3	18	1	10	18	29	54
% App. Total	0	0	0		0	100	0		83.3	0	16.7		3.4	34.5	62.1		
PHF	.000	.000	.000	.000	.000	.583	.000	.583	.625	.000	.375	.750	.250	.625	.500	.725	.794

Counts Unlimited Inc.
PO Box 1178
Corona, CA 92878
(951) 268-6268

City of Riverside
N/S: Kingdom Drive
E/W: Overlook Parkway
Weather: Sunny

File Name : RIVKIOLPM
Site Code : 11046155
Start Date : 3/31/2011
Page No : 2

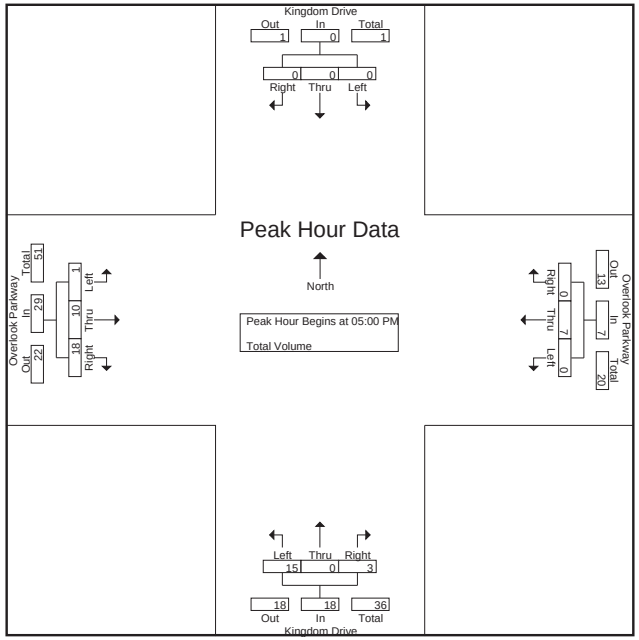

Peak Hour Analysis From 04:00 PM to 05:45 PM - Peak 1 of 1

Peak Hour for Each Approach Begins at:

	04:00 PM				04:30 PM				05:00 PM				05:00 PM			
0 mins.	0	0	0	0	0	1	0	1	3	0	**2**	5	0	2	1	3
15 mins.	0	0	0	0	**1**	2	0	**3**	3	0	1	4	0	1	**9**	**10**
30 mins.	0	0	0	0	0	2	0	2	**6**	0	0	**6**	**1**	3	4	8
45 mins.	0	0	0	0	0	**3**	0	3	3	0	0	3	0	**4**	4	8
Total Volume	0	0	0	0	1	8	0	9	15	0	3	18	1	10	18	29
% App. Total	0	0	0		11.1	88.9	0		83.3	0	16.7		3.4	34.5	62.1	
PHF	.000	.000	.000	.000	.250	.667	.000	.750	.625	.000	.375	.750	.250	.625	.500	.725

Counts Unlimited Inc.
PO Box 1178
Corona, CA 92878
(951) 268-6268

City of Riverside
N/S: Kingdom Drive
E/W: Green Orchard Place
Weather: Sunny

File Name : RIVKIGOAM
Site Code : 11046662
Start Date : 3/31/2011
Page No : 1

Groups Printed- Total Volume

	ingdom Drive Southbound			Green Orchard Place Westbound			ingdom Drive Northbound			
Start Time	Left	Thru	App. Total	Left	Right	App. Total	Thru	Right	App. Total	Int. Total
07:00 AM	0	4	4	0	1	1	2	1	3	8
07:15 AM	1	0	1	0	4	4	2	1	3	8
07:30 AM	1	3	4	0	2	2	6	0	6	12
07:45 AM	1	1	2	0	6	6	2	1	3	11
Total	3	8	11	0	13	13	12	3	15	39
08:00 AM	3	5	8	0	7	7	4	0	4	19
08:15 AM	2	4	6	0	1	1	0	0	0	7
08:30 AM	1	1	2	0	2	2	2	1	3	7
08:45 AM	2	5	7	0	1	1	3	0	3	11
Total	8	15	23	0	11	11	9	1	10	44
Grand Total	11	23	34	0	24	24	21	4	25	83
Apprch %	32.4	67.6		0	100		84	16		
Total %	13.3	27.7	41	0	28.9	28.9	25.3	4.8	30.1	

	ingdom Drive Southbound			Green Orchard Place Westbound			ingdom Drive Northbound			
Start Time	Left	Thru	App. Total	Left	Right	App. Total	Thru	Right	App. Total	Int. Total
Peak Hour Analysis From 07:00 AM to 08:45 AM - Peak 1 of 1										
Peak Hour for Entire Intersection Begins at 07:15 AM										
07:15 AM	1	0	1	0	4	4	2	**1**	3	8
07:30 AM	1	3	4	0	2	2	**6**	0	**6**	12
07:45 AM	1	1	2	0	6	6	2	1	3	11
08:00 AM	**3**	**5**	**8**	0	**7**	**7**	4	0	4	**19**
Total Volume	6	9	15	0	19	19	14	2	16	50
% App. Total	40	60		0	100		87.5	12.5		
PHF	.500	.450	.469	.000	.679	.679	.583	.500	.667	.658

Counts Unlimited Inc.
PO Box 1178
Corona, CA 92878
(951) 268-6268

City of Riverside
N/S: Kingdom Drive
E/W: Green Orchard Place
Weather: Sunny

File Name : RIVKIGOAM
Site Code : 11046662
Start Date : 3/31/2011
Page No : 2

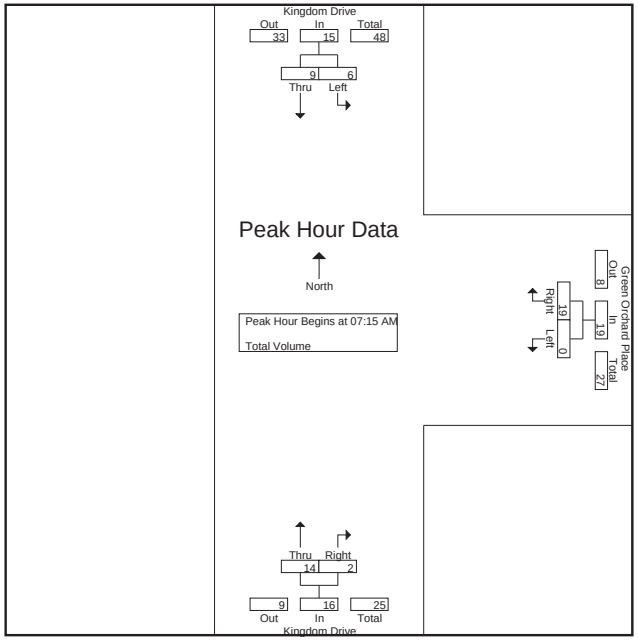

Peak Hour Analysis From 07:00 AM to 08:45 AM - Peak 1 of 1

Peak Hour for Each Approach Begins at:

	08:00 AM			07:15 AM			07:15 AM		
+0 mins.	**3**	**5**	**8**	0	4	4	2	**1**	3
+15 mins.	2	4	6	0	2	2	**6**	0	**6**
+30 mins.	1	1	2	0	6	6	2	1	3
+45 mins.	2	5	7	0	**7**	**7**	4	0	4
Total Volume	8	15	23	0	19	19	14	2	16
% App. Total	34.8	65.2		0	100		87.5	12.5	
PHF	.667	.750	.719	.000	.679	.679	.583	.500	.667

Counts Unlimited Inc.
PO Box 1178
Corona, CA 92878
(951) 268-6268

City of Riverside
N/S: Kingdom Drive
E/W: Green Orchard Place
Weather: Sunny

File Name : RIVKIGOPM
Site Code : 11046662
Start Date : 3/31/2011
Page No : 1

□roups Printe□□Total Volume

	□ing□om □ri□e □outh□oun□			□reen □rchar□Place □ est□oun□			□ing□om □ri□e □orth□oun□			
□tart Time	□eft	Thru	App. Total	□eft	□ight	App. Total	Thru	□ight	App. Total	□ntTotal
04:00 PM	0	1	1	0	1	1	2	0	2	4
04:15 PM	0	5	5	0	0	0	0	0	0	5
04:30 PM	3	5	8	0	0	0	2	1	3	11
04:45 PM	2	2	4	1	2	3	0	0	0	7
Total	5	13	18	1	3	4	4	1	5	27
05:00 PM	0	2	2	0	1	1	1	1	2	5
05:15 PM	4	6	10	0	2	2	2	0	2	14
05:30 PM	1	3	4	0	4	4	3	1	4	12
05:45 PM	2	1	3	0	1	1	2	0	2	6
Total	7	12	19	0	8	8	8	2	10	37
□ran□Total	12	25	37	1	11	12	12	3	15	64
Apprch %	32.4	67.6		8.3	91.7		80	20		
Total %	18.8	39.1	57.8	1.6	17.2	18.8	18.8	4.7	23.4	

	□ing□om □ri□e □outh□oun□			□reen □rchar□Place □ est□oun□			□ing□om □ri□e □orth□oun□			
□tart Time	□eft	Thru	App. Total	□eft	□ight	App. Total	Thru	□ight	App. Total	□ntTotal
Peak Hour Anal□sis From 04:00 PM to 05:45 PM □Peak 1 of 1										
Peak Hour for Entire □ntersection Begins at 04:45 PM										
04:45 PM	2	2	4	**1**	2	3	0	0	0	7
05:00 PM	0	2	2	0	1	1	1	**1**	2	5
05:15 PM	**4**	**6**	**10**	0	2	2	2	0	2	**14**
05:30 PM	1	3	4	0	**4**	**4**	**3**	1	**4**	12
Total Volume	7	13	20	1	9	10	6	2	8	38
% App. Total	35	65		10	90		75	25		
PHF	.438	.542	.500	.250	.563	.625	.500	.500	.500	.679

Counts Unlimited Inc.
PO Box 1178
Corona, CA 92878
(951) 268-6268

City of Riverside
N/S: Kingdom Drive
E/W: Green Orchard Place
Weather: Sunny

File Name : RIVKIGOPM
Site Code : 11046662
Start Date : 3/31/2011
Page No : 2

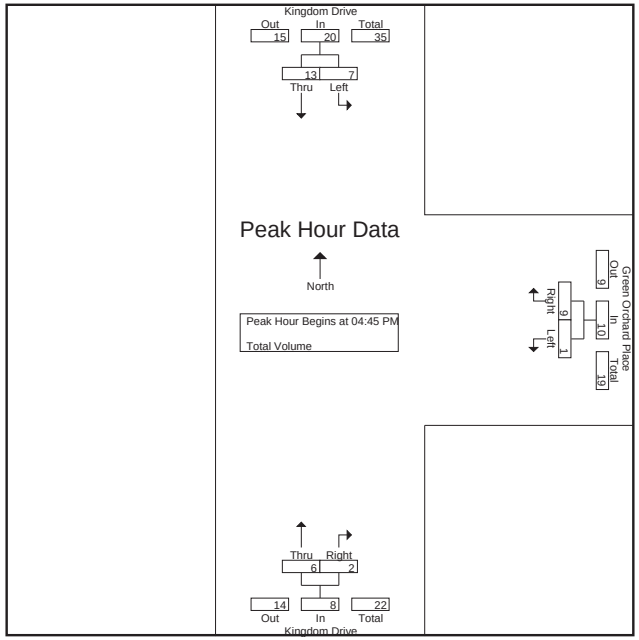

Peak Hour Analysis From 04:00 PM to 05:45 PM - Peak 1 of 1

Peak Hour for Each Approach Begins at:

	04:30 PM			04:45 PM			05:00 PM		
+0 mins.	3	5	8	**1**	2	3	1	**1**	2
+15 mins.	2	2	4	0	1	1	2	0	2
+30 mins.	0	2	2	0	2	2	**3**	1	**4**
+45 mins.	**4**	**6**	**10**	0	**4**	**4**	2	0	2
Total Volume	9	15	24	1	9	10	8	2	10
% App. Total	37.5	62.5		10	90		80	20	
PHF	.563	.625	.600	.250	.563	.625	.667	.500	.625

Counts Unlimited Inc.
PO Box 1178
Corona, CA 92878
(951) 268-6268

City of Riverside
N/S: Trautwein Road
E/W: John F Kennedy Drive
Weather: Sunny

File Name : RIVTRJFKAM
Site Code : 11046022
Start Date : 3/29/2011
Page No : 1

□roups Printe□□Total Volume

	Traut□ein □oa□ □outh□oun□				□ohn F □enne□□ □ri□e □ est□oun□				Traut□ein □oa□ □orth□oun□				□ohn F □enne□□ □ri□e East□oun□				
□tart Time	□eft	Thru	□ight	App. Total	□eft	Thru	□ight	App. Total	□eft	Thru	□ight	App. Total	□eft	Thru	□ight	App. Total	□ntTotal
07:00 AM	4	193	91	288	33	3	14	50	5	372	5	382	124	1	26	151	871
07:15 AM	1	184	176	361	47	21	13	81	16	521	16	553	113	7	3	123	1118
07:30 AM	1	126	143	270	26	23	16	65	22	523	37	582	135	15	6	156	1073
07:45 AM	1	112	88	201	2	8	10	20	1	324	11	336	145	19	2	166	723
Total	7	615	498	1120	108	55	53	216	44	1740	69	1853	517	42	37	596	3785
08:00 AM	2	121	139	262	3	12	7	22	7	360	2	369	113	6	5	124	777
08:15 AM	3	117	149	269	2	6	8	16	10	345	5	360	143	9	7	159	804
08:30 AM	3	114	71	188	2	4	6	12	9	277	1	287	174	3	11	188	675
08:45 AM	1	113	51	165	5	4	5	14	5	249	2	256	99	4	9	112	547
Total	9	465	410	884	12	26	26	64	31	1231	10	1272	529	22	32	583	2803
□ran□Total	16	1080	908	2004	120	81	79	280	75	2971	79	3125	1046	64	69	1179	6588
Apprch %	0.8	53.9	45.3		42.9	28.9	28.2		2.4	95.1	2.5		88.7	5.4	5.9		
Total %	0.2	16.4	13.8	30.4	1.8	1.2	1.2	4.3	1.1	45.1	1.2	47.4	15.9	1	1	17.9	

	Traut□ein □oa□ □outh□oun□				□ohn F □enne□□ □ri□e □ est□oun□				Traut□ein □oa□ □orth□oun□				□ohn F □enne□□ □ri□e East□oun□				
□tart Time	□eft	Thru	□ight	App. Total	□eft	Thru	□ight	App. Total	□eft	Thru	□ight	App. Total	□eft	Thru	□ight	App. Total	□ntTotal
Peak Hour Anal□sis From 07:00 AM to 08:45 AM □Peak 1 of 1																	
Peak Hour for Entire □intersection Begins at 07:00 AM																	
07:00 AM	**4**	**193**	91	288	33	3	14	50	5	372	5	382	124	1	**26**	151	871
07:15 AM	1	184	**176**	**361**	**47**	21	13	**81**	16	521	16	553	113	7	3	123	**1118**
07:30 AM	1	126	143	270	26	**23**	**16**	65	**22**	**523**	**37**	**582**	135	15	6	156	1073
07:45 AM	1	112	88	201	2	8	10	20	1	324	11	336	**145**	**19**	2	**166**	723
Total Volume	7	615	498	1120	108	55	53	216	44	1740	69	1853	517	42	37	596	3785
% App. Total	0.6	54.9	44.5		50	25.5	24.5		2.4	93.9	3.7		86.7	7	6.2		
PHF	.438	.797	.707	.776	.574	.598	.828	.667	.500	.832	.466	.796	.891	.553	.356	.898	.846

Counts Unlimited Inc.
PO Box 1178
Corona, CA 92878
(951) 268-6268

City of Riverside
N/S: Trautwein Road
E/W: John F Kennedy Drive
Weather: Sunny

File Name : RIVTRJFKAM
Site Code : 11046022
Start Date : 3/29/2011
Page No : 2

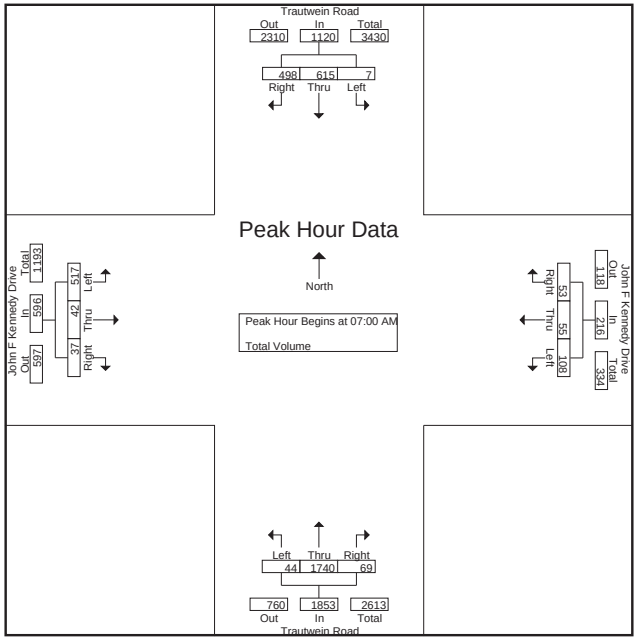

Peak Hour Analysis From 07:00 AM to 08:45 AM - Peak 1 of 1

Peak Hour for Each Approach Begins at:

	07:00 AM				07:00 AM				07:00 AM				07:45 AM			
+0 mins.	**4**	**193**	91	288	33	3	14	50	5	372	5	382	145	**19**	2	166
+15 mins.	1	184	**176**	**361**	**47**	21	13	**81**	16	521	16	553	113	6	5	124
+30 mins.	1	126	143	270	26	**23**	**16**	65	**22**	**523**	**37**	**582**	143	9	7	159
+45 mins.	1	112	88	201	2	8	10	20	1	324	11	336	**174**	3	**11**	**188**
Total Volume	7	615	498	1120	108	55	53	216	44	1740	69	1853	575	37	25	637
% App. Total	0.6	54.9	44.5		50	25.5	24.5		2.4	93.9	3.7		90.3	5.8	3.9	
PHF	.438	.797	.707	.776	.574	.598	.828	.667	.500	.832	.466	.796	.826	.487	.568	.847

Counts Unlimited Inc.
PO Box 1178
Corona, CA 92878
(951) 268-6268

City of Riverside
N/S: Trautwein Road
E/W: John F Kennedy Drive
Weather: Sunny

File Name : RIVTRJFKPM
Site Code : 11046022
Start Date : 3/29/2011
Page No : 1

□roups Printe□□Total Volume

	Traut□ein □oa□ □outh□oun□				□ohn F □enne□□ □ri□e □ est□oun□				Traut□ein □oa□ □orth□oun□				□ohn F □enne□□ □ri□e East□oun□				
□tart Time	□eft	Thru	□ight	App. Total	□eft	Thru	□ight	App. Total	□eft	Thru	□ight	App. Total	□eft	Thru	□ight	App. Total	□ntTotal
04:00 PM	7	252	126	385	5	5	3	13	6	211	13	230	72	6	8	86	714
04:15 PM	5	311	109	425	6	2	9	17	8	218	9	235	85	6	15	106	783
04:30 PM	8	296	124	428	5	4	5	14	6	192	7	205	86	4	13	103	750
04:45 PM	9	367	118	494	4	4	8	16	4	223	8	235	56	4	16	76	821
Total	29	1226	477	1732	20	15	25	60	24	844	37	905	299	20	52	371	3068
05:00 PM	2	312	90	404	5	3	6	14	5	210	5	220	90	2	6	98	736
05:15 PM	12	324	121	457	9	2	7	18	3	198	8	209	82	6	20	108	792
05:30 PM	11	369	123	503	7	4	11	22	12	256	8	276	73	4	21	98	899
05:45 PM	10	408	121	539	9	5	4	18	10	214	9	233	98	7	21	126	916
Total	35	1413	455	1903	30	14	28	72	30	878	30	938	343	19	68	430	3343
□ran□Total	64	2639	932	3635	50	29	53	132	54	1722	67	1843	642	39	120	801	6411
Apprch %	1.8	72.6	25.6		37.9	22	40.2		2.9	93.4	3.6		80.1	4.9	15		
Total %	1	41.2	14.5	56.7	0.8	0.5	0.8	2.1	0.8	26.9	1	28.7	10	0.6	1.9	12.5	

	Traut□ein □oa□ □outh□oun□				□ohn F □enne□□ □ri□e □ est□oun□				Traut□ein □oa□ □orth□oun□				□ohn F □enne□□ □ri□e East□oun□				
□tart Time	□eft	Thru	□ight	App. Total	□eft	Thru	□ight	App. Total	□eft	Thru	□ight	App. Total	□eft	Thru	□ight	App. Total	□ntTotal
Peak Hour Anal□sis From 04:00 PM to 05:45 PM □Peak 1 of 1																	
Peak Hour for Entire □intersection Begins at 05:00 PM																	
05:00 PM	2	312	90	404	5	3	6	14	5	210	5	220	90	2	6	98	736
05:15 PM	**12**	324	121	457	**9**	2	7	18	3	198	8	209	82	6	20	108	792
05:30 PM	11	369	**123**	503	7	4	**11**	**22**	**12**	**256**	8	**276**	73	4	**21**	98	899
05:45 PM	10	**408**	121	**539**	9	**5**	4	18	10	214	**9**	233	**98**	**7**	21	**126**	**916**
Total Volume	35	1413	455	1903	30	14	28	72	30	878	30	938	343	19	68	430	3343
% App. Total	1.8	74.3	23.9		41.7	19.4	38.9		3.2	93.6	3.2		79.8	4.4	15.8		
PHF	.729	.866	.925	.883	.833	.700	.636	.818	.625	.857	.833	.850	.875	.679	.810	.853	.912

Counts Unlimited Inc.
PO Box 1178
Corona, CA 92878
(951) 268-6268

City of Riverside
N/S: Trautwein Road
E/W: John F Kennedy Drive
Weather: Sunny

File Name : RIVTRJFKPM
Site Code : 11046022
Start Date : 3/29/2011
Page No : 2

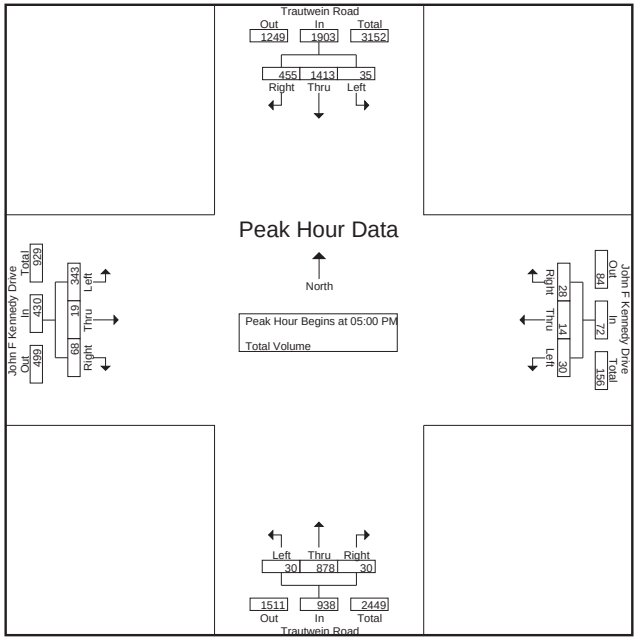

Peak Hour Analysis From 04:00 PM to 05:45 PM - Peak 1 of 1

Peak Hour for Each Approach Begins at:

	05:00 PM				05:00 PM				04:45 PM				05:00 PM			
+0 mins.	2	312	90	404	5	3	6	14	4	223	**8**	235	90	2	6	98
+15 mins.	**12**	324	121	457	**9**	2	7	18	5	210	5	220	82	6	20	108
+30 mins.	11	369	**123**	503	7	4	**11**	**22**	3	198	8	209	73	4	**21**	98
+45 mins.	10	**408**	121	**539**	9	**5**	4	18	**12**	**256**	8	**276**	**98**	**7**	21	**126**
Total Volume	35	1413	455	1903	30	14	28	72	24	887	29	940	343	19	68	430
% App. Total	1.8	74.3	23.9		41.7	19.4	38.9		2.6	94.4	3.1		79.8	4.4	15.8	
PHF	.729	.866	.925	.883	.833	.700	.636	.818	.500	.866	.906	.851	.875	.679	.810	.853

Counts Unlimited Inc.
PO Box 1178
Corona, CA 92878
(951) 268-6268

City of Riverside
N/S: Washington Street
E/W: Bradley Street
Weather: Sunny

File Name : RIVWABRAM
Site Code : 11064131
Start Date : 3/30/2011
Page No : 1

□roups Printe□□Total Volume

	□ ashington □treet □outh□oun□				Bra□le□□treet □ est□oun□				□ ashington □treet □orth□oun□				Bra□le□□treet East□oun□				
□tart Time	□eft	Thru	□ight	App. Total	□eft	Thru	□ight	App. Total	□eft	Thru	□ight	App. Total	□eft	Thru	□ight	App. Total	□ntTotal
07:00 AM	2	63	1	66	5	8	35	48	39	159	0	198	3	5	13	21	333
07:15 AM	5	66	0	71	4	8	32	44	64	231	2	297	1	1	10	12	424
07:30 AM	6	70	0	76	3	13	30	46	75	240	4	319	1	1	17	19	460
07:45 AM	12	71	3	86	7	9	22	38	78	222	4	304	1	5	20	26	454
Total	25	270	4	299	19	38	119	176	256	852	10	1118	6	12	60	78	1671
08:00 AM	9	62	0	71	9	11	14	34	42	172	2	216	0	2	33	35	356
08:15 AM	9	67	1	77	3	4	21	28	43	180	2	225	0	2	17	19	349
08:30 AM	3	69	0	72	5	10	17	32	32	142	3	177	1	1	15	17	298
08:45 AM	9	55	0	64	5	9	13	27	35	129	1	165	1	3	19	23	279
Total	30	253	1	284	22	34	65	121	152	623	8	783	2	8	84	94	1282
□ran□Total	55	523	5	583	41	72	184	297	408	1475	18	1901	8	20	144	172	2953
Apprch %	9.4	89.7	0.9		13.8	24.2	62		21.5	77.6	0.9		4.7	11.6	83.7		
Total %	1.9	17.7	0.2	19.7	1.4	2.4	6.2	10.1	13.8	49.9	0.6	64.4	0.3	0.7	4.9	5.8	

	□ ashington □treet □outh□oun□				Bra□le□□treet □ est□oun□				□ ashington □treet □orth□oun□				Bra□le□□treet East□oun□				
□tart Time	□eft	Thru	□ight	App. Total	□eft	Thru	□ight	App. Total	□eft	Thru	□ight	App. Total	□eft	Thru	□ight	App. Total	□ntTotal
Peak Hour Anal□sis From 07:00 AM to 08:45 AM □Peak 1 of 1																	
Peak Hour for Entire □intersection Begins at 07:15 AM																	
07:15 AM	5	66	0	71	4	8	**32**	44	64	231	2	297	**1**	1	10	12	424
07:30 AM	6	70	0	76	3	**13**	30	**46**	75	**240**	**4**	**319**	1	1	17	19	**460**
07:45 AM	**12**	**71**	**3**	**86**	7	9	22	38	**78**	222	4	304	1	**5**	20	26	454
08:00 AM	9	62	0	71	**9**	11	14	34	42	172	2	216	0	2	**33**	**35**	356
Total Volume	32	269	3	304	23	41	98	162	259	865	12	1136	3	9	80	92	1694
% App. Total	10.5	88.5	1		14.2	25.3	60.5		22.8	76.1	1.1		3.3	9.8	87		
PHF	.667	.947	.250	.884	.639	.788	.766	.880	.830	.901	.750	.890	.750	.450	.606	.657	.921

Counts Unlimited Inc.
PO Box 1178
Corona, CA 92878
(951) 268-6268

City of Riverside
N/S: Washington Street
E/W: Bradley Street
Weather: Sunny

File Name : RIVWABRAM
Site Code : 11064131
Start Date : 3/30/2011
Page No : 2

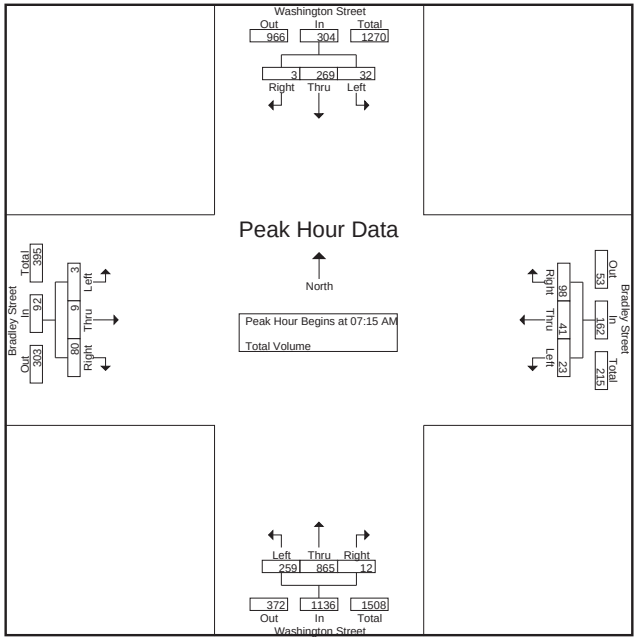

Peak Hour Analysis From 07:00 AM to 08:45 AM - Peak 1 of 1

Peak Hour for Each Approach Begins at:

	07:30 AM				07:00 AM				07:15 AM				07:30 AM			
+0 mins.	6	70	0	76	5	8	**35**	**48**	64	231	2	297	**1**	1	17	19
+15 mins.	**12**	**71**	**3**	**86**	4	8	32	44	75	**240**	**4**	**319**	1	**5**	20	26
+30 mins.	9	62	0	71	3	**13**	30	46	**78**	222	4	304	0	2	**33**	**35**
+45 mins.	9	67	1	77	**7**	9	22	38	42	172	2	216	0	2	17	19
Total Volume	36	270	4	310	19	38	119	176	259	865	12	1136	2	10	87	99
% App. Total	11.6	87.1	1.3		10.8	21.6	67.6		22.8	76.1	1.1		2	10.1	87.9	
PHF	.750	.951	.333	.901	.679	.731	.850	.917	.830	.901	.750	.890	.500	.500	.659	.707

Counts Unlimited Inc.
PO Box 1178
Corona, CA 92878
(951) 268-6268

City of Riverside
N/S: Washington Street
E/W: Bradley Street
Weather: Sunny

File Name : RIVWABRPM
Site Code : 11064131
Start Date : 3/30/2011
Page No : 1

□roups Printe□□Total Volume

	□ ashington □treet □outh□oun□				Bra□le□□treet □ est□oun□				□ ashington □treet □orth□oun□				Bra□le□□treet East□oun□				
□tart Time	□eft	Thru	□ight	App. Total	□eft	Thru	□ight	App. Total	□eft	Thru	□ight	App. Total	□eft	Thru	□ight	App. Total	□ntTotal
04:00 PM	16	132	2	150	4	1	8	13	19	66	2	87	0	8	57	65	315
04:15 PM	17	146	0	163	9	4	10	23	17	106	5	128	0	5	33	38	352
04:30 PM	17	133	0	150	9	9	9	27	20	99	6	125	0	5	38	43	345
04:45 PM	9	133	1	143	6	8	14	28	23	89	4	116	0	5	46	51	338
Total	59	544	3	606	28	22	41	91	79	360	17	456	0	23	174	197	1350
05:00 PM	20	146	0	166	2	3	11	16	34	91	6	131	0	5	71	76	389
05:15 PM	24	164	0	188	4	4	8	16	38	106	6	150	0	5	53	58	412
05:30 PM	22	151	0	173	7	3	10	20	36	79	2	117	0	15	52	67	377
05:45 PM	27	135	0	162	7	6	11	24	22	78	3	103	1	8	45	54	343
Total	93	596	0	689	20	16	40	76	130	354	17	501	1	33	221	255	1521
□ran□Total	152	1140	3	1295	48	38	81	167	209	714	34	957	1	56	395	452	2871
Apprch %	11.7	88	0.2		28.7	22.8	48.5		21.8	74.6	3.6		0.2	12.4	87.4		
Total %	5.3	39.7	0.1	45.1	1.7	1.3	2.8	5.8	7.3	24.9	1.2	33.3	0	2	13.8	15.7	

	□ ashington □treet □outh□oun□				Bra□le□□treet □ est□oun□				□ ashington □treet □orth□oun□				Bra□le□□treet East□oun□				
□tart Time	□eft	Thru	□ight	App. Total	□eft	Thru	□ight	App. Total	□eft	Thru	□ight	App. Total	□eft	Thru	□ight	App. Total	□ntTotal
Peak Hour Anal□sis From 04:00 PM to 05:45 PM □Peak 1 of 1																	
Peak Hour for Entire □ntersection Begins at 05:00 PM																	
05:00 PM	20	146	0	166	2	3	**11**	16	34	91	**6**	131	0	5	**71**	**76**	389
05:15 PM	24	**164**	0	**188**	4	4	8	16	**38**	**106**	6	**150**	0	5	53	58	**412**
05:30 PM	22	151	0	173	**7**	3	10	20	36	79	2	117	0	**15**	52	67	377
05:45 PM	**27**	135	0	162	7	**6**	11	**24**	22	78	3	103	**1**	8	45	54	343
Total Volume	93	596	0	689	20	16	40	76	130	354	17	501	1	33	221	255	1521
% App. Total	13.5	86.5	0		26.3	21.1	52.6		25.9	70.7	3.4		0.4	12.9	86.7		
PHF	.861	.909	.000	.916	.714	.667	.909	.792	.855	.835	.708	.835	.250	.550	.778	.839	.923

Counts Unlimited Inc.
PO Box 1178
Corona, CA 92878
(951) 268-6268

City of Riverside
N/S: Washington Street
E/W: Bradley Street
Weather: Sunny

File Name : RIVWABRPM
Site Code : 11064131
Start Date : 3/30/2011
Page No : 2

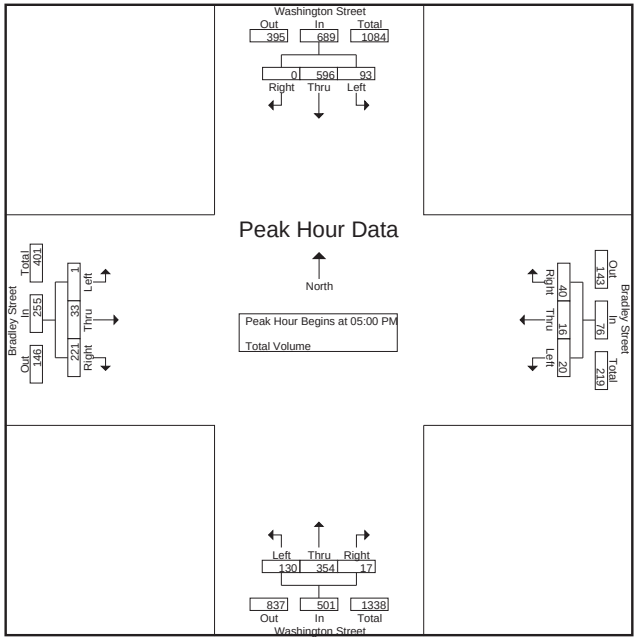

Peak Hour Analysis From 04:00 PM to 05:45 PM - Peak 1 of 1

Peak Hour for Each Approach Begins at:

	05:00 PM				04:15 PM				04:30 PM				05:00 PM			
+0 mins.	20	146	0	166	**9**	4	10	23	20	99	**6**	125	0	5	**71**	**76**
+15 mins.	24	**164**	0	**188**	9	**9**	9	27	23	89	4	116	0	5	53	58
+30 mins.	22	151	0	173	6	8	**14**	**28**	34	91	6	131	0	**15**	52	67
+45 mins.	**27**	135	0	162	2	3	11	16	**38**	**106**	6	**150**	**1**	8	45	54
Total Volume	93	596	0	689	26	24	44	94	115	385	22	522	1	33	221	255
% App. Total	13.5	86.5	0		27.7	25.5	46.8		22	73.8	4.2		0.4	12.9	86.7	
PHF	.861	.909	.000	.916	.722	.667	.786	.839	.757	.908	.917	.870	.250	.550	.778	.839

Counts Unlimited, Inc.
PO Box 1178
Corona, CA 92878
(951) 268-6268

City of Riverside
N/S: Alessandro Boulevard
E/W: Via Vista Drive
Weather: Sunny

File Name : RIVALVVAM
Site Code : 11046097
Start Date : 3/31/2011
Page No : 1

□roups Printe□□Total Volume

	Alessan□ro Boule□ar□ □outh□oun□				Via Vista □ri□e □ est□oun□				Alessan□ro Boule□ar□ □orth□oun□				Via Vista □ri□e East□oun□				
□tart Time	□eft	Thru	□ight	App. Total	□eft	Thru	□ight	App. Total	□eft	Thru	□ight	App. Total	□eft	Thru	□ight	App. Total	□ntTotal
07:00 AM	5	194	11	210	4	0	20	24	1	596	0	597	30	4	6	40	871
07:15 AM	4	203	8	215	7	4	31	42	11	740	4	755	37	5	4	46	1058
07:30 AM	7	241	7	255	5	6	27	38	8	804	3	815	48	14	6	68	1176
07:45 AM	5	238	20	263	4	11	23	38	19	559	3	581	48	9	12	69	951
Total	21	876	46	943	20	21	101	142	39	2699	10	2748	163	32	28	223	4056
08:00 AM	10	245	22	277	2	21	19	42	31	466	3	500	35	15	21	71	890
08:15 AM	12	220	30	262	1	10	13	24	28	449	3	480	40	15	23	78	844
08:30 AM	11	220	10	241	3	6	19	28	4	418	1	423	39	18	28	85	777
08:45 AM	7	201	9	217	3	1	18	22	6	393	2	401	22	12	8	42	682
Total	40	886	71	997	9	38	69	116	69	1726	9	1804	136	60	80	276	3193
□ran□Total	61	1762	117	1940	29	59	170	258	108	4425	19	4552	299	92	108	499	7249
Apprch %	3.1	90.8	6		11.2	22.9	65.9		2.4	97.2	0.4		59.9	18.4	21.6		
Total %	0.8	24.3	1.6	26.8	0.4	0.8	2.3	3.6	1.5	61	0.3	62.8	4.1	1.3	1.5	6.9	

	Alessan□ro Boule□ar□ □outh□oun□				Via Vista □ri□e □ est□oun□				Alessan□ro Boule□ar□ □orth□oun□				Via Vista □ri□e East□oun□				
□tart Time	□eft	Thru	□ight	App. Total	□eft	Thru	□ight	App. Total	□eft	Thru	□ight	App. Total	□eft	Thru	□ight	App. Total	□ntTotal
Peak Hour Anal□sis From 07:00 AM to 08:45 AM □Peak 1 of 1																	
Peak Hour for Entire □ntersection Begins at 07:15 AM																	
07:15 AM	4	203	8	215	**7**	4	**31**	**42**	11	740	**4**	755	37	5	4	46	1058
07:30 AM	7	241	7	255	5	6	27	38	8	**804**	3	**815**	**48**	14	6	68	**1176**
07:45 AM	5	238	20	263	4	11	23	38	19	559	3	581	48	9	12	69	951
08:00 AM	**10**	**245**	**22**	**277**	2	**21**	19	42	**31**	466	3	500	35	**15**	**21**	**71**	890
Total Volume	26	927	57	1010	18	42	100	160	69	2569	13	2651	168	43	43	254	4075
% App. Total	2.6	91.8	5.6		11.2	26.2	62.5		2.6	96.9	0.5		66.1	16.9	16.9		
PHF	.650	.946	.648	.912	.643	.500	.806	.952	.556	.799	.813	.813	.875	.717	.512	.894	.866

Counts Unlimited, Inc.
PO Box 1178
Corona, CA 92878
(951) 268-6268

City of Riverside
N/S: Alessandro Boulevard
E/W: Via Vista Drive
Weather: Sunny

File Name : RIVALVVAM
Site Code : 11046097
Start Date : 3/31/2011
Page No : 2

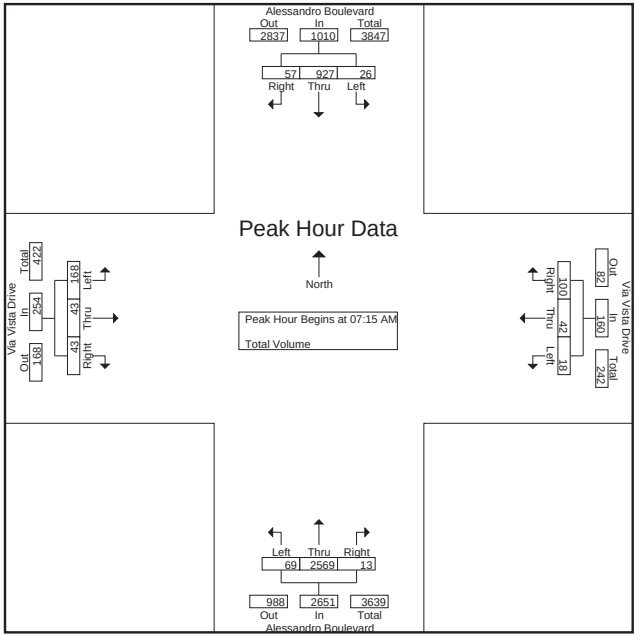

Peak Hour Analysis From 07:00 AM to 08:45 AM - Peak 1 of 1

Peak Hour for Each Approach Begins at:

	07:30 AM				07:15 AM				07:00 AM				07:45 AM			
+0 mins.	7	241	7	255	**7**	4	**31**	**42**	1	596	0	597	**48**	9	12	69
+15 mins.	5	238	20	263	5	6	27	38	11	740	**4**	755	35	15	21	71
+30 mins.	10	**245**	22	**277**	4	11	23	38	8	**804**	3	**815**	40	15	23	78
+45 mins.	**12**	220	**30**	262	2	**21**	19	42	**19**	559	3	581	39	**18**	**28**	**85**
Total Volume	34	944	79	1057	18	42	100	160	39	2699	10	2748	162	57	84	303
% App. Total	3.2	89.3	7.5		11.2	26.2	62.5		1.4	98.2	0.4		53.5	18.8	27.7	
PHF	.708	.963	.658	.954	.643	.500	.806	.952	.513	.839	.625	.843	.844	.792	.750	.891

Counts Unlimited, Inc.
PO Box 1178
Corona, CA 92878
(951) 268-6268

City of Riverside
N/S: Alessandro Boulevard
E/W: Via Vista Drive
Weather: Sunny

File Name : RIVALVVPM
Site Code : 11046097
Start Date : 3/31/2011
Page No : 1

□roups Printe□□Total Volume

	Alessan□ro Boule□ar□ □outh□oun□				Via Vista □ri□e □ est□oun□				Alessan□ro Boule□ar□ □orth□oun□				Via Vista □ri□e East□oun□				
□tart Time	□eft	Thru	□ight	App. Total	□eft	Thru	□ight	App. Total	□eft	Thru	□ight	App. Total	□eft	Thru	□ight	App. Total	□ntTotal
04:00 PM	21	553	14	588	3	3	16	22	9	292	5	306	16	3	7	26	942
04:15 PM	20	545	23	588	5	7	12	24	7	255	4	266	22	5	5	32	910
04:30 PM	25	563	18	606	3	5	21	29	10	320	5	335	11	10	11	32	1002
04:45 PM	21	606	18	645	3	5	14	22	13	311	3	327	13	9	11	33	1027
Total	87	2267	73	2427	14	20	63	97	39	1178	17	1234	62	27	34	123	3881
05:00 PM	19	604	11	634	5	8	9	22	12	298	5	315	13	5	13	31	1002
05:15 PM	17	693	26	736	7	6	15	28	8	345	5	358	12	3	14	29	1151
05:30 PM	19	611	17	647	4	3	29	36	8	311	3	322	11	5	8	24	1029
05:45 PM	17	578	17	612	1	10	16	27	6	276	2	284	8	5	8	21	944
Total	72	2486	71	2629	17	27	69	113	34	1230	15	1279	44	18	43	105	4126
□ran□Total	159	4753	144	5056	31	47	132	210	73	2408	32	2513	106	45	77	228	8007
Apprch %	3.1	94	2.8		14.8	22.4	62.9		2.9	95.8	1.3		46.5	19.7	33.8		
Total %	2	59.4	1.8	63.1	0.4	0.6	1.6	2.6	0.9	30.1	0.4	31.4	1.3	0.6	1	2.8	

	Alessan□ro Boule□ar□ □outh□oun□				Via Vista □ri□e □ est□oun□				Alessan□ro Boule□ar□ □orth□oun□				Via Vista □ri□e East□oun□				
□tart Time	□eft	Thru	□ight	App. Total	□eft	Thru	□ight	App. Total	□eft	Thru	□ight	App. Total	□eft	Thru	□ight	App. Total	□ntTotal
Peak Hour Anal□sis From 04:00 PM to 05:45 PM □Peak 1 of 1																	
Peak Hour for Entire □ntersection Begins at 04:45 PM																	
04:45 PM	**21**	606	18	645	3	5	14	22	**13**	311	3	327	**13**	**9**	11	**33**	1027
05:00 PM	19	604	11	634	5	**8**	9	22	12	298	**5**	315	13	5	13	31	1002
05:15 PM	17	**693**	**26**	**736**	**7**	6	15	28	8	**345**	5	**358**	12	3	**14**	29	**1151**
05:30 PM	19	611	17	647	4	3	**29**	**36**	8	311	3	322	11	5	8	24	1029
Total Volume	76	2514	72	2662	19	22	67	108	41	1265	16	1322	49	22	46	117	4209
% App. Total	2.9	94.4	2.7		17.6	20.4	62		3.1	95.7	1.2		41.9	18.8	39.3		
PHF	.905	.907	.692	.904	.679	.688	.578	.750	.788	.917	.800	.923	.942	.611	.821	.886	.914

Counts Unlimited, Inc.
PO Box 1178
Corona, CA 92878
(951) 268-6268

City of Riverside
N/S: Alessandro Boulevard
E/W: Via Vista Drive
Weather: Sunny

File Name : RIVALVVPM
Site Code : 11046097
Start Date : 3/31/2011
Page No : 2

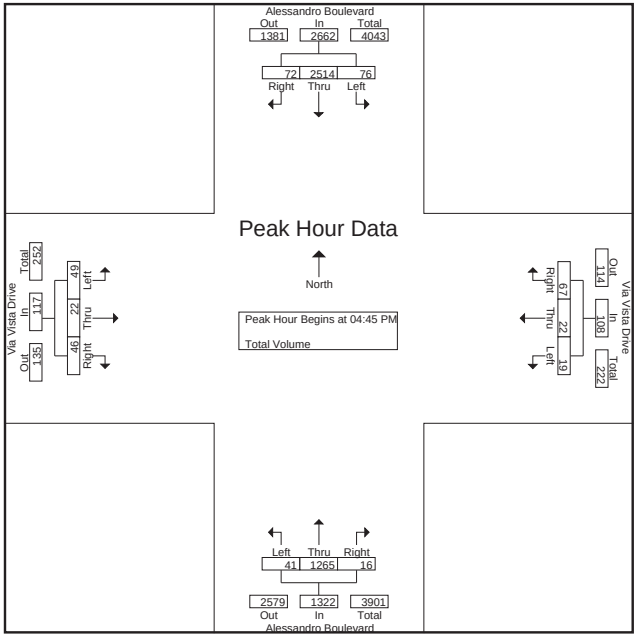

Peak Hour Analysis From 04:00 PM to 05:45 PM - Peak 1 of 1

Peak Hour for Each Approach Begins at:

	04:45 PM				05:00 PM				04:30 PM				04:15 PM			
+0 mins.	**21**	606	18	645	5	8	9	22	10	320	**5**	335	**22**	5	5	32
+15 mins.	19	604	11	634	**7**	6	15	28	**13**	311	3	327	11	**10**	11	32
+30 mins.	17	**693**	**26**	**736**	4	3	**29**	**36**	12	298	5	315	13	9	11	**33**
+45 mins.	19	611	17	647	1	**10**	16	27	8	**345**	5	**358**	13	5	**13**	31
Total Volume	76	2514	72	2662	17	27	69	113	43	1274	18	1335	59	29	40	128
% App. Total	2.9	94.4	2.7		15	23.9	61.1		3.2	95.4	1.3		46.1	22.7	31.2	
PHF	.905	.907	.692	.904	.607	.675	.595	.785	.827	.923	.900	.932	.670	.725	.769	.970

Counts Unlimited Inc.
PO Box 1178
Corona, CA 92878
(951) 268-6268

City of Riverside
N/S: Mary Street
E/W: Victoria Avenue
Weather: Sunny

File Name : RIVMYVIAM
Site Code : 11046099
Start Date : 3/30/2011
Page No : 1

□roups Printe□□Total Volume

	Mar□□treet □outh□oun□				Victoria A□enue □ est□oun□				Mar□□treet □orth□oun□				Victoria A□enue East□oun□				
□tart Time	□eft	Thru	□ight	App. Total	□eft	Thru	□ight	App. Total	□eft	Thru	□ight	App. Total	□eft	Thru	□ight	App. Total	□ntTotal
07:00 AM	3	12	8	23	10	46	18	74	4	25	23	52	42	79	0	121	270
07:15 AM	13	18	13	44	7	68	28	103	5	59	44	108	83	92	2	177	432
07:30 AM	24	27	20	71	12	60	22	94	3	47	50	100	79	86	4	169	434
07:45 AM	14	24	22	60	10	73	41	124	3	49	48	100	85	97	5	187	471
Total	54	81	63	198	39	247	109	395	15	180	165	360	289	354	11	654	1607
08:00 AM	13	39	13	65	15	70	30	115	2	36	25	63	66	78	5	149	392
08:15 AM	4	22	29	55	8	52	19	79	2	50	21	73	60	88	1	149	356
08:30 AM	5	19	28	52	9	37	11	57	4	26	17	47	59	68	3	130	286
08:45 AM	7	22	13	42	9	46	12	67	4	46	20	70	42	56	4	102	281
Total	29	102	83	214	41	205	72	318	12	158	83	253	227	290	13	530	1315
□ran□Total	83	183	146	412	80	452	181	713	27	338	248	613	516	644	24	1184	2922
Apprch %	20.1	44.4	35.4		11.2	63.4	25.4		4.4	55.1	40.5		43.6	54.4	2		
Total %	2.8	6.3	5	14.1	2.7	15.5	6.2	24.4	0.9	11.6	8.5	21	17.7	22	0.8	40.5	

	Mar□□treet □outh□oun□				Victoria A□enue □ est□oun□				Mar□□treet □orth□oun□				Victoria A□enue East□oun□				
□tart Time	□eft	Thru	□ight	App. Total	□eft	Thru	□ight	App. Total	□eft	Thru	□ight	App. Total	□eft	Thru	□ight	App. Total	□ntTotal
Peak Hour Anal□sis From 07:00 AM to 08:45 AM □Peak 1 of 1																	
Peak Hour for Entire □ntersection Begins at 07:15 AM																	
07:15 AM	13	18	13	44	7	68	28	103	**5**	**59**	44	**108**	83	92	2	177	432
07:30 AM	**24**	27	20	**71**	12	60	22	94	3	47	**50**	100	79	86	4	169	434
07:45 AM	14	24	**22**	60	10	**73**	**41**	**124**	3	49	48	100	**85**	**97**	**5**	**187**	**471**
08:00 AM	13	**39**	13	65	**15**	70	30	115	2	36	25	63	66	78	5	149	392
Total Volume	64	108	68	240	44	271	121	436	13	191	167	371	313	353	16	682	1729
% App. Total	26.7	45	28.3		10.1	62.2	27.8		3.5	51.5	45		45.9	51.8	2.3		
PHF	.667	.692	.773	.845	.733	.928	.738	.879	.650	.809	.835	.859	.921	.910	.800	.912	.918

Counts Unlimited Inc.
PO Box 1178
Corona, CA 92878
(951) 268-6268

City of Riverside
N/S: Mary Street
E/W: Victoria Avenue
Weather: Sunny

File Name : RIVMYVIAM
Site Code : 11046099
Start Date : 3/30/2011
Page No : 2

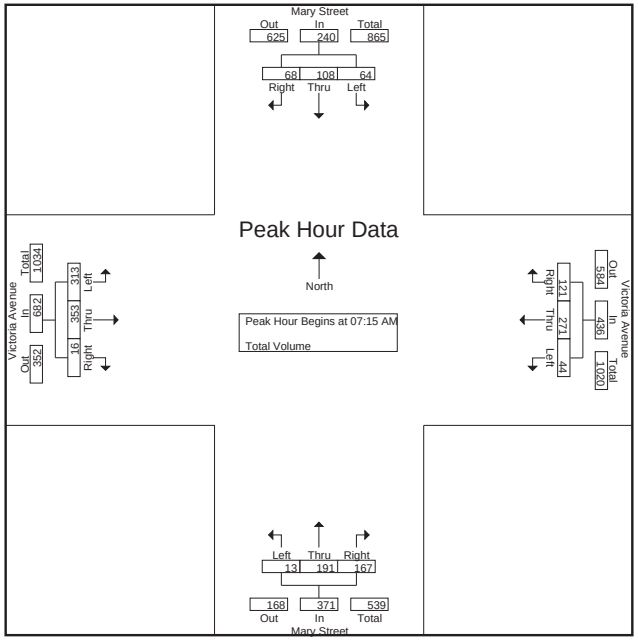

Peak Hour Analysis From 07:00 AM to 08:45 AM - Peak 1 of 1

Peak Hour for Each Approach Begins at:

	07:30 AM				07:15 AM				07:15 AM				07:15 AM			
+0 mins.	**24**	27	20	**71**	7	68	28	103	**5**	**59**	44	**108**	83	92	2	177
+15 mins.	14	24	22	60	12	60	22	94	3	47	**50**	100	79	86	4	169
+30 mins.	13	**39**	13	65	10	**73**	**41**	**124**	3	49	48	100	**85**	**97**	**5**	**187**
+45 mins.	4	22	**29**	55	**15**	70	30	115	2	36	25	63	66	78	5	149
Total Volume	55	112	84	251	44	271	121	436	13	191	167	371	313	353	16	682
% App. Total	21.9	44.6	33.5		10.1	62.2	27.8		3.5	51.5	45		45.9	51.8	2.3	
PHF	.573	.718	.724	.884	.733	.928	.738	.879	.650	.809	.835	.859	.921	.910	.800	.912

Counts Unlimited Inc.
PO Box 1178
Corona, CA 92878
(951) 268-6268

City of Riverside
N/S: Mary Street
E/W: Victoria Avenue
Weather: Sunny

File Name : RIVMYVIPM
Site Code : 11046099
Start Date : 3/30/2011
Page No : 1

□roups Printe□□Total Volume

	Mar□□treet □outh□oun□				Victoria A□enue □ est□oun□				Mar□□treet □orth□oun□				Victoria A□enue East□oun□				
□tart Time	□eft	Thru	□ight	App. Total	□eft	Thru	□ight	App. Total	□eft	Thru	□ight	App. Total	□eft	Thru	□ight	App. Total	□ntTotal
04:00 PM	20	42	33	95	24	60	6	90	1	18	16	35	32	68	7	107	327
04:15 PM	16	42	51	109	20	63	6	89	4	25	22	51	22	75	2	99	348
04:30 PM	17	42	59	118	28	64	6	98	3	18	16	37	21	70	4	95	348
04:45 PM	13	34	49	96	34	82	13	129	3	20	23	46	24	66	5	95	366
Total	66	160	192	418	106	269	31	406	11	81	77	169	99	279	18	396	1389
05:00 PM	19	50	83	152	25	61	13	99	1	14	17	32	24	60	2	86	369
05:15 PM	24	62	57	143	28	64	12	104	1	25	14	40	24	74	4	102	389
05:30 PM	12	58	57	127	39	77	23	139	2	16	13	31	26	54	2	82	379
05:45 PM	19	60	50	129	37	84	31	152	2	18	16	36	31	57	2	90	407
Total	74	230	247	551	129	286	79	494	6	73	60	139	105	245	10	360	1544
□ran□Total	140	390	439	969	235	555	110	900	17	154	137	308	204	524	28	756	2933
Apprch %	14.4	40.2	45.3		26.1	61.7	12.2		5.5	50	44.5		27	69.3	3.7		
Total %	4.8	13.3	15	33	8	18.9	3.8	30.7	0.6	5.3	4.7	10.5	7	17.9	1	25.8	

	Mar□□treet □outh□oun□				Victoria A□enue □ est□oun□				Mar□□treet □orth□oun□				Victoria A□enue East□oun□				
□tart Time	□eft	Thru	□ight	App. Total	□eft	Thru	□ight	App. Total	□eft	Thru	□ight	App. Total	□eft	Thru	□ight	App. Total	□ntTotal
Peak Hour Anal□sis From 04:00 PM to 05:45 PM □Peak 1 of 1																	
Peak Hour for Entire □ntersection Begins at 05:00 PM																	
05:00 PM	19	50	**83**	**152**	25	61	13	99	1	14	**17**	32	24	60	2	86	369
05:15 PM	**24**	**62**	57	143	28	64	12	104	1	**25**	14	**40**	24	**74**	**4**	**102**	389
05:30 PM	12	58	57	127	**39**	77	23	139	**2**	16	13	31	26	54	2	82	379
05:45 PM	19	60	50	129	37	**84**	**31**	**152**	2	18	16	36	**31**	57	2	90	**407**
Total Volume	74	230	247	551	129	286	79	494	6	73	60	139	105	245	10	360	1544
% App. Total	13.4	41.7	44.8		26.1	57.9	16		4.3	52.5	43.2		29.2	68.1	2.8		
PHF	.771	.927	.744	.906	.827	.851	.637	.813	.750	.730	.882	.869	.847	.828	.625	.882	.948

Counts Unlimited Inc.
PO Box 1178
Corona, CA 92878
(951) 268-6268

City of Riverside
N/S: Mary Street
E/W: Victoria Avenue
Weather: Sunny

File Name : RIVMYVIPM
Site Code : 11046099
Start Date : 3/30/2011
Page No : 2

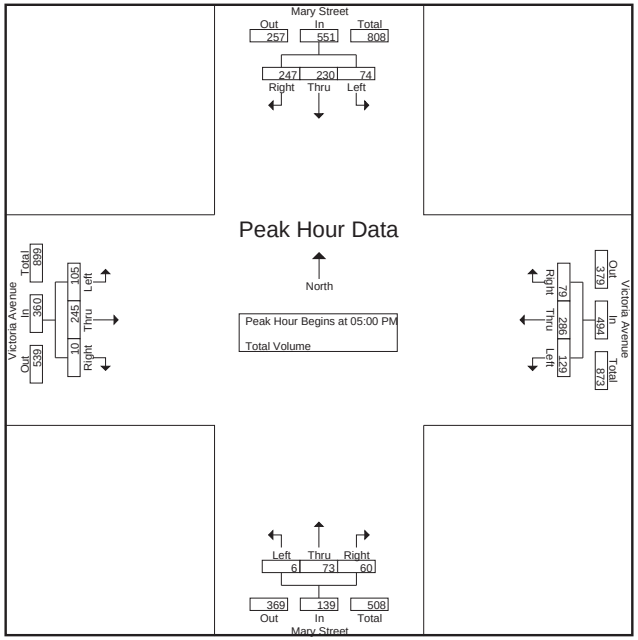

Peak Hour Analysis From 04:00 PM to 05:45 PM - Peak 1 of 1

Peak Hour for Each Approach Begins at:

	05:00 PM				05:00 PM				04:00 PM				04:00 PM			
+0 mins.	19	50	**83**	**152**	25	61	13	99	1	18	16	35	**32**	68	**7**	**107**
+15 mins.	**24**	**62**	57	143	28	64	12	104	**4**	**25**	22	**51**	22	**75**	2	99
+30 mins.	12	58	57	127	**39**	77	23	139	3	18	16	37	21	70	4	95
+45 mins.	19	60	50	129	37	**84**	**31**	**152**	3	20	**23**	46	24	66	5	95
Total Volume	74	230	247	551	129	286	79	494	11	81	77	169	99	279	18	396
% App. Total	13.4	41.7	44.8		26.1	57.9	16		6.5	47.9	45.6		25	70.5	4.5	
PHF	.771	.927	.744	.906	.827	.851	.637	.813	.688	.810	.837	.828	.773	.930	.643	.925

Counts Unlimited Inc.
PO Box 1178
Corona, CA 92878
(951) 268-6268

City of Riverside
N/S: Mary Street
E/W: Hawarden Drive
Weather Sunny

File Name : RIVMAHAAM
Site Code : 11046095
Start Date : 3/30/2011
Page No : 1

□roups Printe□□Total Volume

	Mar□□treet □outh□oun□			Ha□ar□en □ri□e □orth□oun□			Ha□ar□en □ri□e East□oun□			
□tart Time	Thru	□ight	App. Total	□eft	Thru	App. Total	□eft	□ight	App. Total	□ntTotal
07:00 AM	7	7	14	1	23	24	17	1	18	56
07:15 AM	8	6	14	0	24	24	32	1	33	71
07:30 AM	8	15	23	0	51	51	34	1	35	109
07:45 AM	12	6	18	0	43	43	22	0	22	83
Total	35	34	69	1	141	142	105	3	108	319
08:00 AM	23	12	35	2	32	34	14	2	16	85
08:15 AM	14	2	16	4	32	36	11	2	13	65
08:30 AM	9	7	16	1	14	15	16	0	16	47
08:45 AM	8	5	13	1	9	10	12	1	13	36
Total	54	26	80	8	87	95	53	5	58	233
□ran□Total	89	60	149	9	228	237	158	8	166	552
Apprch %	59.7	40.3		3.8	96.2		95.2	4.8		
Total %	16.1	10.9	27	1.6	41.3	42.9	28.6	1.4	30.1	

	Mar□□treet □outh□oun□			Ha□ar□en □ri□e □orth□oun□			Ha□ar□en □ri□e East□oun□			
□tart Time	Thru	□ight	App. Total	□eft	Thru	App. Total	□eft	□ight	App. Total	□ntTotal
Peak Hour Anal□sis From 07:00 AM to 08:30 AM □Peak 1 of 1										
Peak Hour for Entire □ntersection Begins at 07:15 AM										
07:15 AM	8	6	14	0	24	24	32	1	33	71
07:30 AM	8	**15**	23	0	**51**	**51**	**34**	1	**35**	**109**
07:45 AM	12	6	18	0	43	43	22	0	22	83
08:00 AM	**23**	12	**35**	**2**	32	34	14	**2**	16	85
Total Volume	51	39	90	2	150	152	102	4	106	348
% App. Total	56.7	43.3		1.3	98.7		96.2	3.8		
PHF	.554	.650	.643	.250	.735	.745	.750	.500	.757	.798

Counts Unlimited Inc.
PO Box 1178
Corona, CA 92878
(951) 268-6268

City of Riverside
N/S: Mary Street
E/W: Hawarden Drive
Weather Sunny

File Name : RIVMAHAAM
Site Code : 11046095
Start Date : 3/30/2011
Page No : 2

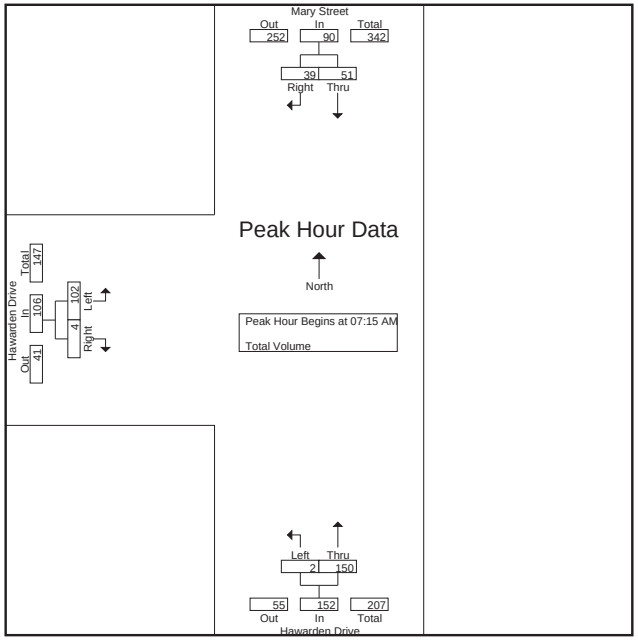

Peak Hour Analysis From 07:00 AM to 08:30 AM - Peak 1 of 1

Peak Hour for Each Approach Begins at:

	07:30 AM			07:30 AM			07:00 AM		
+0 mins.	8	**15**	23	0	**51**	**51**	17	**1**	18
+15 mins.	12	6	18	0	43	43	32	1	33
+30 mins.	**23**	12	**35**	2	32	34	**34**	1	**35**
+45 mins.	14	2	16	**4**	32	36	22	0	22
Total Volume	57	35	92	6	158	164	105	3	108
% App. Total	62	38		3.7	96.3		97.2	2.8	
PHF	.620	.583	.657	.375	.775	.804	.772	.750	.771

Counts Unlimited Inc.
PO Box 1178
Corona, CA 92878
(951) 268-6268

City of Riverside
N/S: Mary Street
E/W: Hawarden Drive
Weather Sunny

File Name : RIVMAHAPM
Site Code : 11046095
Start Date : 3/30/2011
Page No : 1

□roups Printe□□Total Volume

	Mar□□treet □outh□oun□			Ha□ar□en □ri□e □orth□oun□			Ha□ar□en □ri□e East□oun□			
□tart Time	Thru	□ight	App. Total	□eft	Thru	App. Total	□eft	□ight	App. Total	□ntTotal
04:00 PM	19	12	31	2	16	18	9	0	9	58
04:15 PM	21	14	35	1	19	20	12	2	14	69
04:30 PM	25	17	42	0	16	16	13	0	13	71
04:45 PM	31	16	47	2	18	20	10	4	14	81
Total	96	59	155	5	69	74	44	6	50	279
05:00 PM	24	19	43	2	17	19	14	1	15	77
05:15 PM	31	18	49	1	12	13	8	1	9	71
05:30 PM	30	27	57	1	9	10	12	0	12	79
05:45 PM	22	15	37	0	11	11	8	0	8	56
Total	107	79	186	4	49	53	42	2	44	283
□ran□Total	203	138	341	9	118	127	86	8	94	562
Apprch %	59.5	40.5		7.1	92.9		91.5	8.5		
Total %	36.1	24.6	60.7	1.6	21	22.6	15.3	1.4	16.7	

	Mar□□treet □outh□oun□			Ha□ar□en □ri□e □orth□oun□			Ha□ar□en □ri□e East□oun□			
□tart Time	Thru	□ight	App. Total	□eft	Thru	App. Total	□eft	□ight	App. Total	□ntTotal
Peak Hour Anal□sis From 04:00 PM to 05:30 PM □Peak 1 of 1										
Peak Hour for Entire □ntersection Begins at 04:45 PM										
04:45 PM	**31**	16	47	**2**	**18**	**20**	10	**4**	14	**81**
05:00 PM	24	19	43	2	17	19	**14**	1	**15**	77
05:15 PM	31	18	49	1	12	13	8	1	9	71
05:30 PM	30	**27**	**57**	1	9	10	12	0	12	79
Total Volume	116	80	196	6	56	62	44	6	50	308
% App. Total	59.2	40.8		9.7	90.3		88	12		
PHF	.935	.741	.860	.750	.778	.775	.786	.375	.833	.951

Counts Unlimited Inc.
PO Box 1178
Corona, CA 92878
(951) 268-6268

City of Riverside
N/S: Mary Street
E/W: Hawarden Drive
Weather Sunny

File Name : RIVMAHAPM
Site Code : 11046095
Start Date : 3/30/2011
Page No : 2

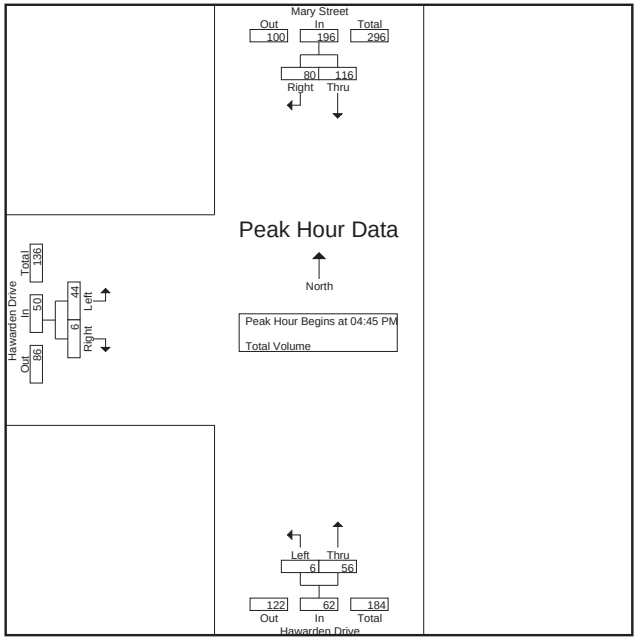

Peak Hour Analysis From 04:00 PM to 05:30 PM - Peak 1 of 1

Peak Hour for Each Approach Begins at:

	04:45 PM			04:15 PM			04:15 PM		
+0 mins.	**31**	16	47	1	**19**	**20**	12	2	14
+15 mins.	24	19	43	0	16	16	13	0	13
+30 mins.	31	18	49	**2**	18	20	10	**4**	14
+45 mins.	30	**27**	**57**	2	17	19	**14**	1	**15**
Total Volume	116	80	196	5	70	75	49	7	56
% App. Total	59.2	40.8		6.7	93.3		87.5	12.5	
PHF	.935	.741	.860	.625	.921	.938	.875	.438	.933

Counts Unlimited Inc.
PO Box 1178
Corona, CA 92878
(951) 268-6268

City of Riverside
N/S: Hawarden Drive
E/W: Overlook Parkway
Weather: Sunny

File Name : RIVHAOLAM
Site Code : 11046098
Start Date : 3/30/2011
Page No : 1

□roups Printe□□Total Volume

	Ha□ar□en □ri□e □outh□oun□				□□erlook Park□a□ □ est□oun□				Ha□ar□en □ri□e □orth□oun□				□□erlook Park□a□ East□oun□				
□tart Time	□eft	Thru	□ight	App. Total	□eft	Thru	□ight	App. Total	□eft	Thru	□ight	App. Total	□eft	Thru	□ight	App. Total	□ntTotal
07:00 AM	1	4	1	6	0	18	3	21	14	10	0	24	2	9	4	15	66
07:15 AM	0	6	2	8	0	17	6	23	13	18	0	31	3	7	5	15	77
07:30 AM	3	10	2	15	0	31	7	38	12	26	0	38	2	11	4	17	108
07:45 AM	1	4	3	8	0	24	2	26	10	12	2	24	1	15	5	21	79
Total	5	24	8	37	0	90	18	108	49	66	2	117	8	42	18	68	330
08:00 AM	2	3	3	8	0	21	2	23	9	8	2	19	4	14	7	25	75
08:15 AM	0	0	2	2	1	13	1	15	11	10	1	22	1	17	2	20	59
08:30 AM	0	5	1	6	0	20	0	20	17	5	1	23	1	15	2	18	67
08:45 AM	1	2	0	3	0	17	1	18	12	4	0	16	3	14	3	20	57
Total	3	10	6	19	1	71	4	76	49	27	4	80	9	60	14	83	258
□ran□Total	8	34	14	56	1	161	22	184	98	93	6	197	17	102	32	151	588
Apprch %	14.3	60.7	25		0.5	87.5	12		49.7	47.2	3		11.3	67.5	21.2		
Total %	1.4	5.8	2.4	9.5	0.2	27.4	3.7	31.3	16.7	15.8	1	33.5	2.9	17.3	5.4	25.7	

	Ha□ar□en □ri□e □outh□oun□				□□erlook Park□a□ □ est□oun□				Ha□ar□en □ri□e □orth□oun□				□□erlook Park□a□ East□oun□				
□tart Time	□eft	Thru	□ight	App. Total	□eft	Thru	□ight	App. Total	□eft	Thru	□ight	App. Total	□eft	Thru	□ight	App. Total	□ntTotal
Peak Hour Anal□sis From 07:00 AM to 08:45 AM □Peak 1 of 1																	
Peak Hour for Entire □ntersection Begins at 07:15 AM																	
07:15 AM	0	6	2	8	0	17	6	23	**13**	18	0	31	3	7	5	15	77
07:30 AM	**3**	**10**	2	**15**	0	**31**	**7**	**38**	12	**26**	0	**38**	2	11	4	17	**108**
07:45 AM	1	4	**3**	8	0	24	2	26	10	12	**2**	24	1	**15**	5	21	79
08:00 AM	2	3	3	8	0	21	2	23	9	8	2	19	**4**	14	**7**	**25**	75
Total Volume	6	23	10	39	0	93	17	110	44	64	4	112	10	47	21	78	339
% App. Total	15.4	59	25.6		0	84.5	15.5		39.3	57.1	3.6		12.8	60.3	26.9		
PHF	.500	.575	.833	.650	.000	.750	.607	.724	.846	.615	.500	.737	.625	.783	.750	.780	.785

Counts Unlimited Inc.
PO Box 1178
Corona, CA 92878
(951) 268-6268

City of Riverside
N/S: Hawarden Drive
E/W: Overlook Parkway
Weather: Sunny

File Name : RIVHAOLAM
Site Code : 11046098
Start Date : 3/30/2011
Page No : 2

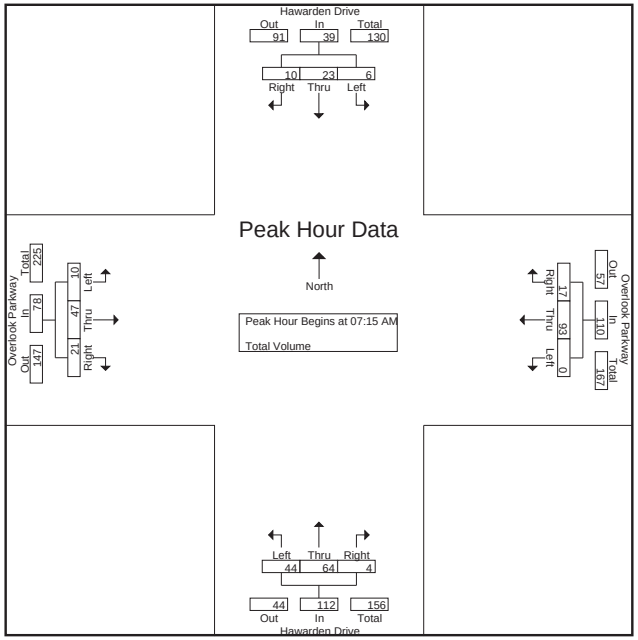

Peak Hour Analysis From 07:00 AM to 08:45 AM - Peak 1 of 1

Peak Hour for Each Approach Begins at:

	07:15 AM				07:15 AM				07:00 AM				07:45 AM			
+0 mins.	0	6	2	8	0	17	6	23	**14**	10	0	24	1	15	5	21
+15 mins.	**3**	**10**	2	**15**	0	**31**	**7**	**38**	13	18	0	31	**4**	14	**7**	**25**
+30 mins.	1	4	**3**	8	0	24	2	26	12	**26**	0	**38**	1	**17**	2	20
+45 mins.	2	3	3	8	0	21	2	23	10	12	**2**	24	1	15	2	18
Total Volume	6	23	10	39	0	93	17	110	49	66	2	117	7	61	16	84
% App. Total	15.4	59	25.6		0	84.5	15.5		41.9	56.4	1.7		8.3	72.6	19	
PHF	.500	.575	.833	.650	.000	.750	.607	.724	.875	.635	.250	.770	.438	.897	.571	.840

Counts Unlimited Inc.
PO Box 1178
Corona, CA 92878
(951) 268-6268

City of Riverside
N/S: Hawarden Drive
E/W: Overlook Parkway
Weather: Sunny

File Name : RIVHAOLPM
Site Code : 11046098
Start Date : 3/30/2011
Page No : 1

□roups Printe□□Total Volume

	Ha□ar□en □ri□e □outh□oun□				□□erlook Park□a□ □ est□oun□				Ha□ar□en □ri□e □orth□oun□				□□erlook Park□a□ East□oun□				
□tart Time	□eft	Thru	□ight	App. Total	□eft	Thru	□ight	App. Total	□eft	Thru	□ight	App. Total	□eft	Thru	□ight	App. Total	□ntTotal
04:00 PM	2	8	7	17	0	21	2	23	8	4	0	12	0	12	6	18	70
04:15 PM	0	7	4	11	1	13	4	18	8	4	0	12	3	24	8	35	76
04:30 PM	4	8	1	13	1	17	3	21	10	7	0	17	1	23	7	31	82
04:45 PM	5	8	2	15	4	19	1	24	9	6	2	17	3	11	15	29	85
Total	11	31	14	56	6	70	10	86	35	21	2	58	7	70	36	113	313
05:00 PM	0	13	4	17	1	13	1	15	8	8	1	17	2	14	10	26	75
05:15 PM	4	9	4	17	0	11	0	11	2	5	1	8	2	23	16	41	77
05:30 PM	8	17	1	26	1	20	2	23	5	5	4	14	1	22	13	36	99
05:45 PM	1	16	4	21	0	12	4	16	3	5	0	8	3	17	6	26	71
Total	13	55	13	81	2	56	7	65	18	23	6	47	8	76	45	129	322
□ran□Total	24	86	27	137	8	126	17	151	53	44	8	105	15	146	81	242	635
Apprch %	17.5	62.8	19.7		5.3	83.4	11.3		50.5	41.9	7.6		6.2	60.3	33.5		
Total %	3.8	13.5	4.3	21.6	1.3	19.8	2.7	23.8	8.3	6.9	1.3	16.5	2.4	23	12.8	38.1	

	Ha□ar□en □ri□e □outh□oun□				□□erlook Park□a□ □ est□oun□				Ha□ar□en □ri□e □orth□oun□				□□erlook Park□a□ East□oun□				
□tart Time	□eft	Thru	□ight	App. Total	□eft	Thru	□ight	App. Total	□eft	Thru	□ight	App. Total	□eft	Thru	□ight	App. Total	□ntTotal
Peak Hour Anal□sis From 04:00 PM to 05:45 PM □Peak 1 of 1																	
Peak Hour for Entire □intersection Begins at 04:45 PM																	
04:45 PM	5	8	2	15	**4**	19	1	**24**	**9**	6	2	**17**	**3**	11	15	29	85
05:00 PM	0	13	**4**	17	1	13	1	15	8	**8**	1	17	2	14	10	26	75
05:15 PM	4	9	4	17	0	11	0	11	2	5	1	8	2	**23**	**16**	**41**	77
05:30 PM	**8**	**17**	1	**26**	1	**20**	**2**	23	5	5	**4**	14	1	22	13	36	**99**
Total Volume	17	47	11	75	6	63	4	73	24	24	8	56	8	70	54	132	336
% App. Total	22.7	62.7	14.7		8.2	86.3	5.5		42.9	42.9	14.3		6.1	53	40.9		
PHF	.531	.691	.688	.721	.375	.788	.500	.760	.667	.750	.500	.824	.667	.761	.844	.805	.848

Counts Unlimited Inc.
PO Box 1178
Corona, CA 92878
(951) 268-6268

City of Riverside
N/S: Hawarden Drive
E/W: Overlook Parkway
Weather: Sunny

File Name : RIVHAOLPM
Site Code : 11046098
Start Date : 3/30/2011
Page No : 2

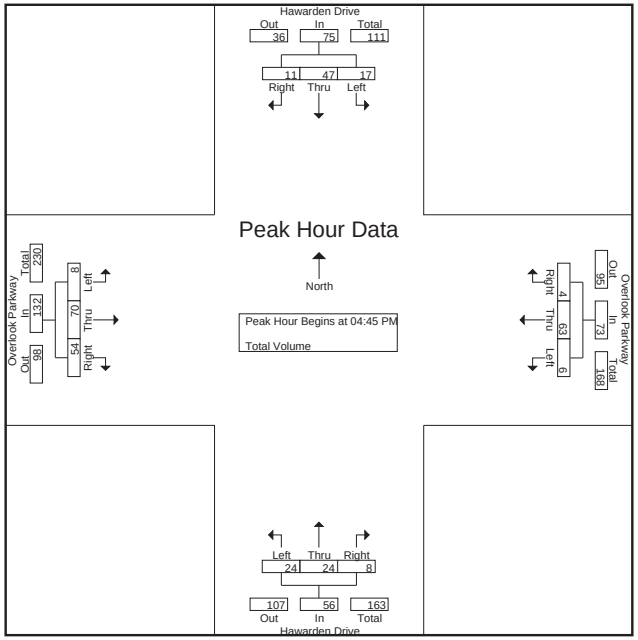

Peak Hour Analysis From 04:00 PM to 05:45 PM - Peak 1 of 1

Peak Hour for Each Approach Begins at:

	05:00 PM				04:00 PM				04:15 PM				04:45 PM			
+0 mins.	0	13	**4**	17	0	**21**	2	23	8	4	0	12	**3**	11	15	29
+15 mins.	4	9	4	17	1	13	**4**	18	**10**	7	0	**17**	2	14	10	26
+30 mins.	**8**	**17**	1	**26**	1	17	3	21	9	6	**2**	17	2	**23**	**16**	**41**
+45 mins.	1	16	4	21	**4**	19	1	**24**	8	**8**	1	17	1	22	13	36
Total Volume	13	55	13	81	6	70	10	86	35	25	3	63	8	70	54	132
% App. Total	16	67.9	16		7	81.4	11.6		55.6	39.7	4.8		6.1	53	40.9	
PHF	.406	.809	.813	.779	.375	.833	.625	.896	.875	.781	.375	.926	.667	.761	.844	.805

Counts Unlimited Inc.
PO Box 1178
Corona, CA 92878
(951) 268-6268

City of Riverside
N/S: Crystal View Terrace
E/W: Berry Road
Weather: Sunny

File Name : RIVCVBEAM
Site Code : 11046131
Start Date : 3/31/2011
Page No : 1

Groups Printed- Total Volume

	Crystal View Terrace Southbound				Berry Road Westbound				Crystal View Terrace Northbound				Berry Road Eastbound				
Start Time	Left	Thru	Right	App. Total	Left	Thru	Right	App. Total	Left	Thru	Right	App. Total	Left	Thru	Right	App. Total	Int. Total
07:00 AM	1	0	0	1	1	0	0	1	0	0	17	17	0	0	0	0	19
07:15 AM	1	1	0	2	6	1	1	8	0	0	17	17	0	2	1	3	30
07:30 AM	1	1	0	2	4	0	0	4	0	2	31	33	0	0	1	1	40
07:45 AM	1	1	1	3	8	0	0	8	1	0	22	23	0	0	1	1	35
Total	4	3	1	8	19	1	1	21	1	2	87	90	0	2	3	5	124
08:00 AM	0	0	1	1	15	1	1	17	0	0	27	27	0	0	1	1	46
08:15 AM	2	0	1	3	4	0	3	7	0	1	25	26	0	1	0	1	37
08:30 AM	4	0	0	4	7	0	1	8	0	0	12	12	0	0	0	0	24
08:45 AM	1	1	0	2	2	1	1	4	0	0	14	14	0	0	0	0	20
Total	7	1	2	10	28	2	6	36	0	1	78	79	0	1	1	2	127
Grand Total	11	4	3	18	47	3	7	57	1	3	165	169	0	3	4	7	251
Apprch %	61.1	22.2	16.7		82.5	5.3	12.3		0.6	1.8	97.6		0	42.9	57.1		
Total %	4.4	1.6	1.2	7.2	18.7	1.2	2.8	22.7	0.4	1.2	65.7	67.3	0	1.2	1.6	2.8	

	Crystal View Terrace Southbound				Berry Road Westbound				Crystal View Terrace Northbound				Berry Road Eastbound				
Start Time	Left	Thru	Right	App. Total	Left	Thru	Right	App. Total	Left	Thru	Right	App. Total	Left	Thru	Right	App. Total	Int. Total
Peak Hour Analysis From 07:00 AM to 08:45 AM - Peak 1 of 1																	
Peak Hour for Entire Intersection Begins at 07:30 AM																	
07:30 AM	1	**1**	0	2	4	0	0	4	0	**2**	**31**	**33**	0	0	**1**	**1**	40
07:45 AM	1	1	**1**	**3**	8	0	0	8	**1**	0	22	23	0	0	1	1	35
08:00 AM	0	0	1	1	**15**	**1**	1	**17**	0	0	27	27	0	0	1	1	**46**
08:15 AM	**2**	0	1	3	4	0	**3**	7	0	1	25	26	0	**1**	0	1	37
Total Volume	4	2	3	9	31	1	4	36	1	3	105	109	0	1	3	4	158
% App. Total	44.4	22.2	33.3		86.1	2.8	11.1		0.9	2.8	96.3		0	25	75		
PHF	.500	.500	.750	.750	.517	.250	.333	.529	.250	.375	.847	.826	.000	.250	.750	1.000	.859

Counts Unlimited Inc.
PO Box 1178
Corona, CA 92878
(951) 268-6268

City of Riverside
N/S: Crystal View Terrace
E/W: Berry Road
Weather: Sunny

File Name : RIVCVBEAM
Site Code : 11046131
Start Date : 3/31/2011
Page No : 2

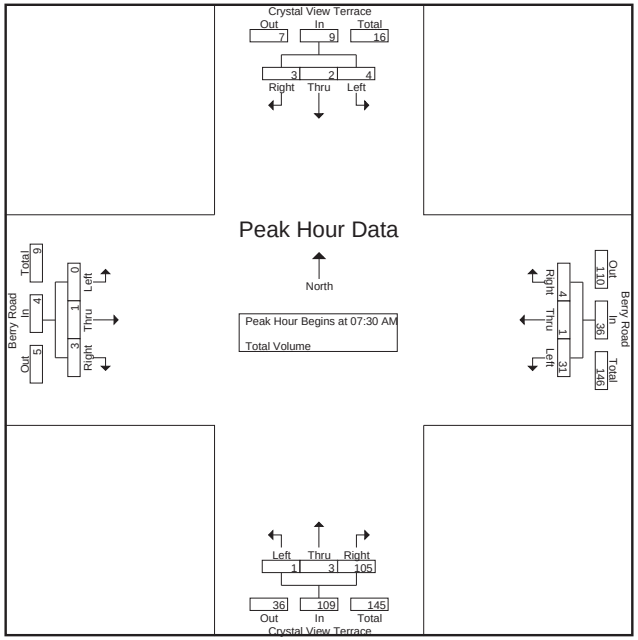

Peak Hour Analysis From 07:00 AM to 08:45 AM - Peak 1 of 1

Peak Hour for Each Approach Begins at:

	07:45 AM				07:45 AM				07:30 AM				07:15 AM			
0 mins.	1	**1**	**1**	3	8	0	0	8	0	**2**	**31**	**33**	0	**2**	**1**	**3**
15 mins.	0	0	1	1	**15**	**1**	1	**17**	**1**	0	22	23	0	0	1	1
30 mins.	2	0	1	3	4	0	**3**	7	0	0	27	27	0	0	1	1
45 mins.	**4**	0	0	**4**	7	0	1	8	0	1	25	26	0	0	1	1
Total Volume	7	1	3	11	34	1	5	40	1	3	105	109	0	2	4	6
% App. Total	63.6	9.1	27.3		85	2.5	12.5		0.9	2.8	96.3		0	33.3	66.7	
PHF	.438	.250	.750	.688	.567	.250	.417	.588	.250	.375	.847	.826	.000	.250	1.000	.500

Counts Unlimited Inc.
PO Box 1178
Corona, CA 92878
(951) 268-6268

City of Riverside
N/S: Crystal View Terrace
E/W: Berry Road
Weather: Sunny

File Name : RIVCVBEPM
Site Code : 11046131
Start Date : 3/31/2011
Page No : 1

Groups Printed- Total Volume

	Crystal View Terrace Southbound				Berry Road Westbound				Crystal View Terrace Northbound				Berry Road Eastbound				
Start Time	Left	Thru	Right	App. Total	Left	Thru	Right	App. Total	Left	Thru	Right	App. Total	Left	Thru	Right	App. Total	Int. Total
04:00 PM	1	1	1	3	9	1	3	13	0	2	7	9	0	0	0	0	25
04:15 PM	1	1	0	2	8	0	1	9	1	0	8	9	0	1	1	2	22
04:30 PM	0	1	0	1	5	0	2	7	0	0	5	5	0	0	0	0	13
04:45 PM	1	1	1	3	8	2	1	11	1	2	6	9	1	1	2	4	27
Total	3	4	2	9	30	3	7	40	2	4	26	32	1	2	3	6	87
05:00 PM	0	2	0	2	10	0	1	11	1	1	4	6	0	1	0	1	20
05:15 PM	0	0	0	0	10	0	0	10	0	0	10	10	0	0	0	0	20
05:30 PM	0	0	0	0	8	0	1	9	1	0	3	4	0	1	0	1	14
05:45 PM	0	0	0	0	8	2	0	10	0	1	5	6	0	0	0	0	16
Total	0	2	0	2	36	2	2	40	2	2	22	26	0	2	0	2	70
Grand Total	3	6	2	11	66	5	9	80	4	6	48	58	1	4	3	8	157
Apprch %	27.3	54.5	18.2		82.5	6.2	11.2		6.9	10.3	82.8		12.5	50	37.5		
Total %	1.9	3.8	1.3	7	42	3.2	5.7	51	2.5	3.8	30.6	36.9	0.6	2.5	1.9	5.1	

	Crystal View Terrace Southbound				Berry Road Westbound				Crystal View Terrace Northbound				Berry Road Eastbound				
Start Time	Left	Thru	Right	App. Total	Left	Thru	Right	App. Total	Left	Thru	Right	App. Total	Left	Thru	Right	App. Total	Int. Total
Peak Hour Analysis From 04:00 PM to 05:45 PM - Peak 1 of 1																	
Peak Hour for Entire Intersection Begins at 04:00 PM																	
04:00 PM	**1**	**1**	**1**	**3**	**9**	1	**3**	**13**	0	**2**	7	**9**	0	0	0	0	25
04:15 PM	1	1	0	2	8	0	1	9	**1**	0	**8**	9	0	**1**	1	2	22
04:30 PM	0	1	0	1	5	0	2	7	0	0	5	5	0	0	0	0	13
04:45 PM	1	1	1	3	8	**2**	1	11	1	2	6	9	**1**	1	**2**	**4**	**27**
Total Volume	3	4	2	9	30	3	7	40	2	4	26	32	1	2	3	6	87
% App. Total	33.3	44.4	22.2		75	7.5	17.5		6.2	12.5	81.2		16.7	33.3	50		
PHF	.750	1.000	.500	.750	.833	.375	.583	.769	.500	.500	.813	.889	.250	.500	.375	.375	.806

Counts Unlimited Inc.
PO Box 1178
Corona, CA 92878
(951) 268-6268

City of Riverside
N/S: Crystal View Terrace
E/W: Berry Road
Weather: Sunny

File Name : RIVCVBEPM
Site Code : 11046131
Start Date : 3/31/2011
Page No : 2

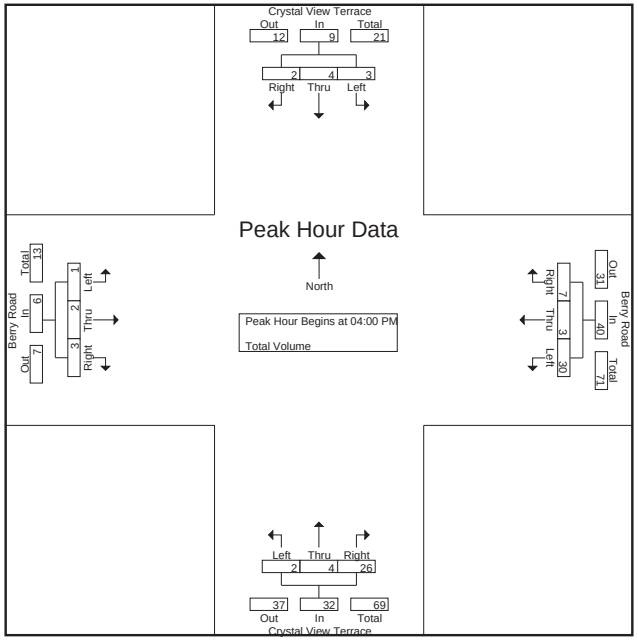

Peak Hour Analysis From 04:00 PM to 05:45 PM - Peak 1 of 1

Peak Hour for Each Approach Begins at:

	04:00 PM				04:45 PM				04:00 PM				04:15 PM			
0 mins.	**1**	**1**	**1**	**3**	8	**2**	**1**	**11**	0	**2**	7	**9**	0	**1**	1	2
15 mins.	1	1	0	2	**10**	0	1	11	**1**	0	**8**	9	0	0	0	0
30 mins.	0	1	0	1	10	0	0	10	0	0	5	5	**1**	1	**2**	**4**
45 mins.	1	1	1	3	8	0	1	9	1	2	6	9	0	1	0	1
Total Volume	3	4	2	9	36	2	3	41	2	4	26	32	1	3	3	7
% App. Total	33.3	44.4	22.2		87.8	4.9	7.3		6.2	12.5	81.2		14.3	42.9	42.9	
PHF	.750	1.000	.500	.750	.900	.250	.750	.932	.500	.500	.813	.889	.250	.750	.375	.438

Counts Unlimited Inc.
PO Box 1178
Corona, CA 92878
(951) 268-6268

City of Riverside
N/S: Corinthian Way
E/W: Berry Road
Weather: Sunny

File Name : RIVCOBEAM
Site Code : 11046139
Start Date : 3/31/2011
Page No : 1

Groups Printed- Total Volume

	Corinthian Way Southbound			Berry Road Westbound			Berry Road Eastbound			
Start Time	Left	Right	App. Total	Thru	Right	App. Total	Left	Thru	App. Total	Int. Total
07:00 AM	2	1	3	1	1	2	16	2	18	23
07:15 AM	0	4	4	3	1	4	17	3	20	28
07:30 AM	2	3	5	2	17	19	26	6	32	56
07:45 AM	0	4	4	5	8	13	23	2	25	42
Total	4	12	16	11	27	38	82	13	95	149
08:00 AM	1	9	10	7	3	10	23	4	27	47
08:15 AM	1	4	5	3	10	13	25	5	30	48
08:30 AM	3	6	9	1	3	4	7	6	13	26
08:45 AM	3	1	4	0	3	3	13	3	16	23
Total	8	20	28	11	19	30	68	18	86	144
Grand Total	12	32	44	22	46	68	150	31	181	293
Apprch %	27.3	72.7		32.4	67.6		82.9	17.1		
Total %	4.1	10.9	15	7.5	15.7	23.2	51.2	10.6	61.8	

	Corinthian Way Southbound			Berry Road Westbound			Berry Road Eastbound			
Start Time	Left	Right	App. Total	Thru	Right	App. Total	Left	Thru	App. Total	Int. Total
Peak Hour Analysis From 07:00 AM to 08:45 AM - Peak 1 of 1										
Peak Hour for Entire Intersection Begins at 07:30 AM										
07:30 AM	**2**	3	5	2	**17**	**19**	**26**	**6**	**32**	**56**
07:45 AM	0	4	4	5	8	13	23	2	25	42
08:00 AM	1	**9**	**10**	**7**	3	10	23	4	27	47
08:15 AM	1	4	5	3	10	13	25	5	30	48
Total Volume	4	20	24	17	38	55	97	17	114	193
% App. Total	16.7	83.3		30.9	69.1		85.1	14.9		
PHF	.500	.556	.600	.607	.559	.724	.933	.708	.891	.862

Counts Unlimited Inc.
PO Box 1178
Corona, CA 92878
(951) 268-6268

City of Riverside
N/S: Corinthian Way
E/W: Berry Road
Weather: Sunny

File Name : RIVCOBEAM
Site Code : 11046139
Start Date : 3/31/2011
Page No : 2

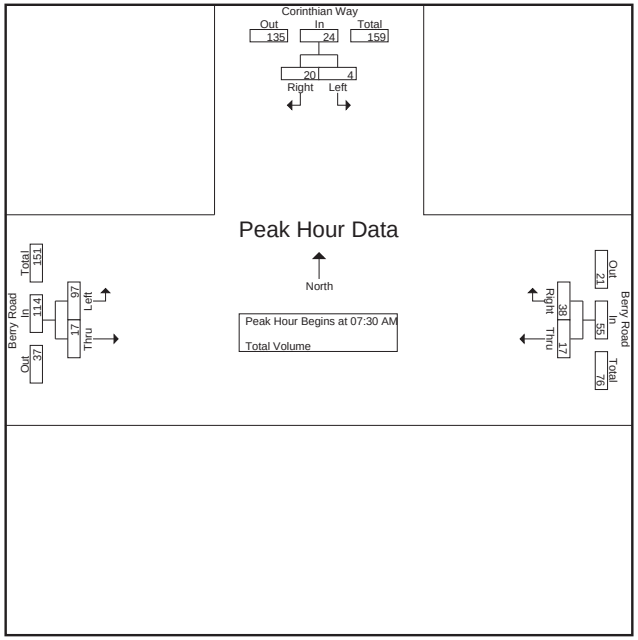

Peak Hour Analysis From 07:00 AM to 08:45 AM - Peak 1 of 1

Peak Hour for Each Approach Begins at:

	07:45 AM			07:30 AM			07:30 AM		
0 mins.	0	4	4	2	**17**	**19**	**26**	**6**	**32**
15 mins.	1	**9**	**10**	5	8	13	23	2	25
30 mins.	1	4	5	**7**	3	10	23	4	27
45 mins.	**3**	6	9	3	10	13	25	5	30
Total Volume	5	23	28	17	38	55	97	17	114
% App. Total	17.9	82.1		30.9	69.1		85.1	14.9	
PHF	.417	.639	.700	.607	.559	.724	.933	.708	.891

Counts Unlimited Inc.
PO Box 1178
Corona, CA 92878
(951) 268-6268

City of Riverside
N/S: Corinthian Way
E/W: Berry Road
Weather: Sunny

File Name : RIVCOBEPM
Site Code : 11046139
Start Date : 3/31/2011
Page No : 1

Groups Printed- Total Volume

	Corinthian Way Southbound			Berry Road Westbound			Berry Road Eastbound			
Start Time	Left	Right	App. Total	Thru	Right	App. Total	Left	Thru	App. Total	Int. Total
04:00 PM	3	11	14	3	6	9	4	1	5	28
04:15 PM	2	7	9	4	2	6	5	5	10	25
04:30 PM	2	3	5	2	3	5	7	0	7	17
04:45 PM	0	9	9	6	1	7	6	3	9	25
Total	7	30	37	15	12	27	22	9	31	95
05:00 PM	1	8	9	3	2	5	3	3	6	20
05:15 PM	4	9	13	2	5	7	7	3	10	30
05:30 PM	3	10	13	4	1	5	4	2	6	24
05:45 PM	6	7	13	1	1	2	4	1	5	20
Total	14	34	48	10	9	19	18	9	27	94
Grand Total	21	64	85	25	21	46	40	18	58	189
Apprch %	24.7	75.3		54.3	45.7		69	31		
Total %	11.1	33.9	45	13.2	11.1	24.3	21.2	9.5	30.7	

	Corinthian Way Southbound			Berry Road Westbound			Berry Road Eastbound			
Start Time	Left	Right	App. Total	Thru	Right	App. Total	Left	Thru	App. Total	Int. Total
Peak Hour Analysis From 04:00 PM to 05:45 PM - Peak 1 of 1										
Peak Hour for Entire Intersection Begins at 04:45 PM										
04:45 PM	0	9	9	**6**	1	**7**	6	**3**	9	25
05:00 PM	1	8	9	3	2	5	3	3	6	20
05:15 PM	**4**	9	**13**	2	**5**	7	**7**	3	**10**	**30**
05:30 PM	3	**10**	13	4	1	5	4	2	6	24
Total Volume	8	36	44	15	9	24	20	11	31	99
% App. Total	18.2	81.8		62.5	37.5		64.5	35.5		
PHF	.500	.900	.846	.625	.450	.857	.714	.917	.775	.825

Counts Unlimited Inc.
PO Box 1178
Corona, CA 92878
(951) 268-6268

City of Riverside
N/S: Corinthian Way
E/W: Berry Road
Weather: Sunny

File Name : RIVCOBEPM
Site Code : 11046139
Start Date : 3/31/2011
Page No : 2

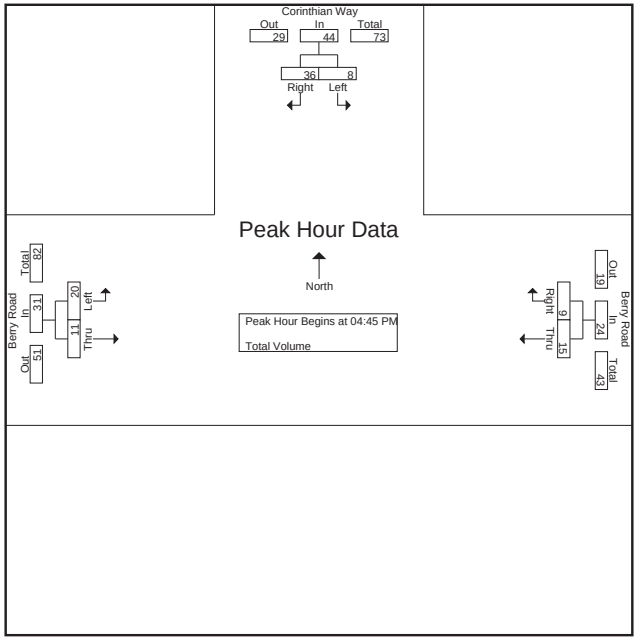

Peak Hour Analysis From 04:00 PM to 05:45 PM - Peak 1 of 1

Peak Hour for Each Approach Begins at:

	05:00 PM			04:00 PM			04:15 PM		
0 mins.	1	8	9	3	**6**	**9**	5	**5**	**10**
15 mins.	4	9	**13**	4	2	6	**7**	0	7
30 mins.	3	**10**	13	2	3	5	6	3	9
45 mins.	**6**	7	13	**6**	1	7	3	3	6
Total Volume	14	34	48	15	12	27	21	11	32
% App. Total	29.2	70.8		55.6	44.4		65.6	34.4	
PHF	.583	.850	.923	.625	.500	.750	.750	.550	.800

Counts Unlimited Inc.
PO Box 1178
Corona, CA 92878
(951) 268-6268

City of Riverside
N/S: Madison Street/Prenda Avenue
E/W: Dufferin Avenue
Weather: Sunny

File Name : RIVMADUAM
Site Code : 11046016
Start Date : 3/30/2011
Page No : 1

Groups Printed- Total Volume

	Madison Street Southbound				ufferin A enue Westbound				ufferin A enue Eastbound				Prenda A enue Southwestbound				
Start Time	Hard Left	Left	Right	App. Total	Thru	Right	Hard Right	App. Total	Left	Bear Left	Thru	App. Total	Hard Left	Bear Right	Hard Right	App. Total	Int. Total
07:00 AM	0	4	1	5	2	2	0	4	1	0	1	2	2	0	1	3	14
07:15 AM	1	6	1	8	2	5	0	7	5	0	0	5	0	0	0	0	20
07:30 AM	0	6	2	8	5	9	0	14	3	0	3	6	0	0	0	0	28
07:45 AM	1	3	2	6	7	5	0	12	3	0	1	4	0	0	1	1	23
Total	2	19	6	27	16	21	0	37	12	0	5	17	2	0	2	4	85
08:00 AM	0	6	6	12	0	3	1	4	1	0	4	5	0	0	1	1	22
08:15 AM	0	1	2	3	1	8	1	10	1	0	3	4	1	0	0	1	18
08:30 AM	1	6	1	8	4	4	0	8	1	0	2	3	0	0	0	0	19
08:45 AM	1	3	2	6	5	3	0	8	0	0	3	3	0	0	0	0	17
Total	2	16	11	29	10	18	2	30	3	0	12	15	1	0	1	2	76
Grand Total	4	35	17	56	26	39	2	67	15	0	17	32	3	0	3	6	161
Apprch %	7.1	62.5	30.4		38.8	58.2	3		46.9	0	53.1		50	0	50		
Total %	2.5	21.7	10.6	34.8	16.1	24.2	1.2	41.6	9.3	0	10.6	19.9	1.9	0	1.9	3.7	

	Madison Street Southbound				ufferin A enue Westbound				ufferin A enue Eastbound				Prenda A enue Southwestbound				
Start Time	Hard Left	Left	Right	App. Total	Thru	Right	Hard Right	App. Total	Left	Bear Left	Thru	App. Total	Hard Left	Bear Right	Hard Right	App. Total	Int. Total
Peak Hour Analysis From 07:00 AM to 08:45 AM - Peak 1 of 1																	
Peak Hour for Entire Intersection Begins at 07:15 AM																	
07:15 AM	**1**	**6**	1	8	2	5	0	7	**5**	0	0	5	0	0	0	0	20
07:30 AM	0	6	2	8	5	**9**	0	**14**	3	0	3	**6**	0	0	0	0	**28**
07:45 AM	1	3	2	6	**7**	5	0	12	3	0	1	4	0	0	**1**	**1**	23
08:00 AM	0	6	**6**	**12**	0	3	**1**	4	1	0	**4**	5	0	0	1	1	22
Total Volume	2	21	11	34	14	22	1	37	12	0	8	20	0	0	2	2	93
% App. Total	5.9	61.8	32.4		37.8	59.5	2.7		60	0	40		0	0	100		
PHF	.500	.875	.458	.708	.500	.611	.250	.661	.600	.000	.500	.833	.000	.000	.500	.500	.830

Counts Unlimited Inc.
PO Box 1178
Corona, CA 92878
(951) 268-6268

City of Riverside
N/S: Madison Street/Prenda Avenue
E/W: Dufferin Avenue
Weather: Sunny

File Name : RIVMADUAM
Site Code : 11046016
Start Date : 3/30/2011
Page No : 2

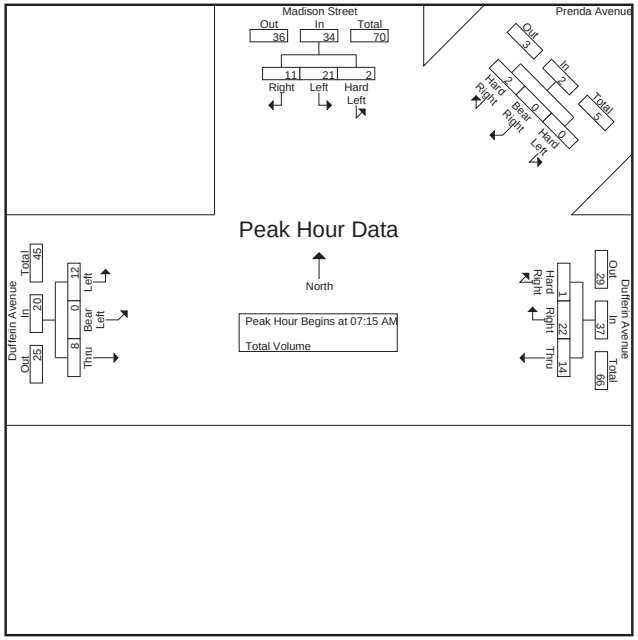

Peak Hour Analysis From 07:00 AM to 08:45 AM - Peak 1 of 1

Peak Hour for Each Approach Begins at:

	07:15 AM				07:30 AM				07:15 AM				07:00 AM			
0 mins.	**1**	**6**	1	8	5	**9**	0	**14**	**5**	0	0	5	**2**	0	**1**	**3**
15 mins.	0	6	2	8	**7**	5	0	12	3	0	3	**6**	0	0	0	0
30 mins.	1	3	2	6	0	3	**1**	4	3	0	1	4	0	0	0	0
45 mins.	0	6	**6**	**12**	1	8	1	10	1	0	**4**	5	0	0	1	1
Total Volume	2	21	11	34	13	25	2	40	12	0	8	20	2	0	2	4
% App. Total	5.9	61.8	32.4		32.5	62.5	5		60	0	40		50	0	50	
PHF	.500	.875	.458	.708	.464	.694	.500	.714	.600	.000	.500	.833	.250	.000	.500	.333

Counts Unlimited Inc.
PO Box 1178
Corona, CA 92878
(951) 268-6268

City of Riverside
N/S: Madison Street/Prenda Avenue
E/W: Dufferin Avenue
Weather: Sunny

File Name : RIVMADUPM
Site Code : 11046016
Start Date : 3/30/2011
Page No : 1

Groups Printed- Total Volume

	Madison Street Southbound				Dufferin Avenue Westbound				Dufferin Avenue Eastbound				Prenda Avenue Southwestbound				
Start Time	Hard Left	Left	Right	App. Total	Thru	Right	Hard Right	App. Total	Left	Bear Left	Thru	App. Total	Hard Left	Bear Right	Hard Right	App. Total	Int. Total
04:00 PM	1	10	5	16	1	5	0	6	1	0	4	5	0	0	0	0	27
04:15 PM	0	9	4	13	1	3	0	4	2	1	4	7	0	0	0	0	24
04:30 PM	0	15	0	15	1	5	2	8	3	1	4	8	0	0	0	0	31
04:45 PM	0	7	0	7	3	8	0	11	0	0	2	2	1	0	2	3	23
Total	1	41	9	51	6	21	2	29	6	2	14	22	1	0	2	3	105
05:00 PM	0	13	5	18	2	6	3	11	2	0	5	7	0	0	1	1	37
05:15 PM	0	17	5	22	2	4	0	6	2	0	8	10	0	0	0	0	38
05:30 PM	1	19	1	21	3	1	0	4	0	0	2	2	0	0	0	0	27
05:45 PM	0	10	2	12	1	2	0	3	0	0	2	2	0	0	0	0	17
Total	1	59	13	73	8	13	3	24	4	0	17	21	0	0	1	1	119
Grand Total	2	100	22	124	14	34	5	53	10	2	31	43	1	0	3	4	224
Apprch %	1.6	80.6	17.7		26.4	64.2	9.4		23.3	4.7	72.1		25	0	75		
Total %	0.9	44.6	9.8	55.4	6.2	15.2	2.2	23.7	4.5	0.9	13.8	19.2	0.4	0	1.3	1.8	

	Madison Street Southbound				Dufferin Avenue Westbound				Dufferin Avenue Eastbound				Prenda Avenue Southwestbound				
Start Time	Hard Left	Left	Right	App. Total	Thru	Right	Hard Right	App. Total	Left	Bear Left	Thru	App. Total	Hard Left	Bear Right	Hard Right	App. Total	Int. Total
Peak Hour Analysis From 04:00 PM to 05:45 PM - Peak 1 of 1																	
Peak Hour for Entire Intersection Begins at 04:30 PM																	
04:30 PM	0	15	0	15	1	5	2	8	**3**	**1**	4	8	0	0	0	0	31
04:45 PM	0	7	0	7	**3**	**8**	0	**11**	0	0	2	2	**1**	0	**2**	**3**	23
05:00 PM	0	13	**5**	18	2	6	**3**	11	2	0	5	7	0	0	1	1	37
05:15 PM	0	**17**	5	**22**	2	4	0	6	2	0	**8**	**10**	0	0	0	0	**38**
Total Volume	0	52	10	62	8	23	5	36	7	1	19	27	1	0	3	4	129
% App. Total	0	83.9	16.1		22.2	63.9	13.9		25.9	3.7	70.4		25	0	75		
PHF	.000	.765	.500	.705	.667	.719	.417	.818	.583	.250	.594	.675	.250	.000	.375	.333	.849

Counts Unlimited Inc.
PO Box 1178
Corona, CA 92878
(951) 268-6268

City of Riverside
N/S: Madison Street/Prenda Avenue
E/W: Dufferin Avenue
Weather: Sunny

File Name : RIVMADUPM
Site Code : 11046016
Start Date : 3/30/2011
Page No : 2

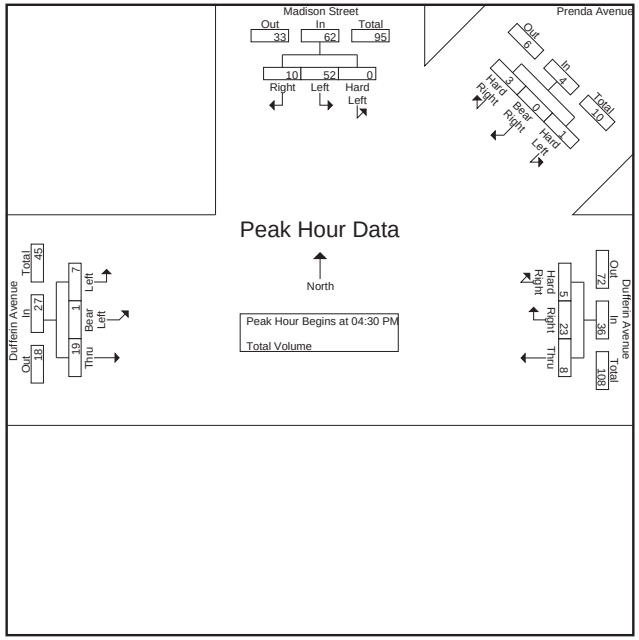

Peak Hour Analysis From 04:00 PM to 05:45 PM - Peak 1 of 1

Peak Hour for Each Approach Begins at:

	05:00 PM				04:30 PM				04:30 PM				04:15 PM			
0 mins.	0	13	**5**	18	1	5	2	8	**3**	**1**	4	8	0	0	0	0
15 mins.	0	17	5	**22**	**3**	**8**	0	**11**	0	0	2	2	0	0	0	0
30 mins.	**1**	**19**	1	21	2	6	**3**	11	2	0	5	7	**1**	0	**2**	**3**
45 mins.	0	10	2	12	2	4	0	6	2	0	**8**	**10**	0	0	1	1
Total Volume	1	59	13	73	8	23	5	36	7	1	19	27	1	0	3	4
% App. Total	1.4	80.8	17.8		22.2	63.9	13.9		25.9	3.7	70.4		25	0	75	
PHF	.250	.776	.650	.830	.667	.719	.417	.818	.583	.250	.594	.675	.250	.000	.375	.333

Counts Unlimited Inc.
PO Box 1178
Corona, CA 92878
(951) 268-6268

City of Riverside
N/S: Orozco Drive
E/W: Overlook Parkway
Weather: Sunny

File Name : RIVOROLAM
Site Code : 11046011
Start Date : 3/30/2011
Page No : 1

Groups Printed- Total Volume

	Orozco Drive Southbound				Overlook Parkway Westbound				Orozco Drive Northbound				Overlook Parkway Eastbound				
Start Time	Left	Thru	Rght	App. Total	Left	Thru	Rght	App. Total	Left	Thru	Rght	App. Total	Left	Thru	Rght	App. Total	Int. Total
07:00 AM	3	1	0	4	0	14	8	22	3	1	0	4	1	9	0	10	40
07:15 AM	3	0	0	3	2	19	12	33	1	0	0	1	1	5	1	7	44
07:30 AM	3	1	0	4	0	31	23	54	2	2	0	4	1	11	0	12	74
07:45 AM	8	0	0	8	0	16	17	33	1	1	0	2	3	13	1	17	60
Total	17	2	0	19	2	80	60	142	7	4	0	11	6	38	2	46	218
08:00 AM	7	0	1	8	0	9	11	20	3	2	0	5	2	13	1	16	49
08:15 AM	4	1	0	5	0	15	13	28	0	2	0	2	1	9	1	11	46
08:30 AM	3	0	1	4	0	15	6	21	1	2	0	3	1	16	0	17	45
08:45 AM	0	0	1	1	0	11	8	19	0	1	0	1	1	12	0	13	34
Total	14	1	3	18	0	50	38	88	4	7	0	11	5	50	2	57	174
Grand Total	31	3	3	37	2	130	98	230	11	11	0	22	11	88	4	103	392
Apprch %	83.8	8.1	8.1		0.9	56.5	42.6		50	50	0		10.7	85.4	3.9		
Total %	7.9	0.8	0.8	9.4	0.5	33.2	25	58.7	2.8	2.8	0	5.6	2.8	22.4	1	26.3	

	Orozco Drive Southbound				Overlook Parkway Westbound				Orozco Drive Northbound				Overlook Parkway Eastbound				
Start Time	Left	Thru	Rght	App. Total	Left	Thru	Rght	App. Total	Left	Thru	Rght	App. Total	Left	Thru	Rght	App. Total	Int. Total
Peak Hour Analysis From 07:00 AM to 08:45 AM - Peak 1 of 1																	
Peak Hour for Entire Intersection Begins at 07:30 AM																	
07:30 AM	3	**1**	0	4	0	**31**	**23**	**54**	2	**2**	0	4	1	11	0	12	**74**
07:45 AM	**8**	0	0	**8**	0	16	17	33	1	1	0	2	**3**	**13**	**1**	**17**	60
08:00 AM	7	0	**1**	8	0	9	11	20	**3**	2	0	**5**	2	13	1	16	49
08:15 AM	4	1	0	5	0	15	13	28	0	2	0	2	1	9	1	11	46
Total Volume	22	2	1	25	0	71	64	135	6	7	0	13	7	46	3	56	229
% App. Total	88	8	4		0	52.6	47.4		46.2	53.8	0		12.5	82.1	5.4		
PHF	.688	.500	.250	.781	.000	.573	.696	.625	.500	.875	.000	.650	.583	.885	.750	.824	.774

Counts Unlimited Inc.
PO Box 1178
Corona, CA 92878
(951) 268-6268

City of Riverside
N/S: Orozco Drive
E/W: Overlook Parkway
Weather: Sunny

File Name : RIVOROLAM
Site Code : 11046011
Start Date : 3/30/2011
Page No : 2

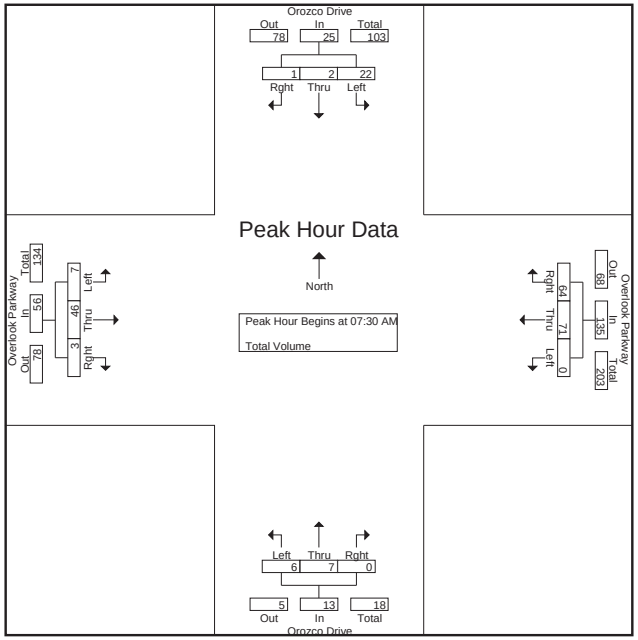

Peak Hour Analysis From 07:00 AM to 08:45 AM - Peak 1 of 1
Peak Hour for Each Approach Begins at:

	07:30 AM				07:00 AM				07:30 AM				07:45 AM			
+0 mins.	3	**1**	0	4	0	14	8	22	2	**2**	0	4	**3**	13	**1**	**17**
+15 mins.	**8**	0	0	**8**	**2**	19	12	33	1	1	0	2	2	13	1	16
+30 mins.	7	0	**1**	8	0	**31**	**23**	**54**	**3**	2	0	**5**	1	9	1	11
+45 mins.	4	1	0	5	0	16	17	33	0	2	0	2	1	**16**	0	17
Total Volume	22	2	1	25	2	80	60	142	6	7	0	13	7	51	3	61
% App. Total	88	8	4		1.4	56.3	42.3		46.2	53.8	0		11.5	83.6	4.9	
PHF	.688	.500	.250	.781	.250	.645	.652	.657	.500	.875	.000	.650	.583	.797	.750	.897

Counts Unlimited Inc.
PO Box 1178
Corona, CA 92878
(951) 268-6268

City of Riverside
N/S: Orozco Drive
E/W: Overlook Parkway
Weather: Sunny

File Name : RIVOROLPM
Site Code : 11046011
Start Date : 3/30/2011
Page No : 1

Groups Printed- Total Volume

	Orozco Drive Southbound				Overlook Parkway Westbound				Orozco Drive Northbound				Overlook Parkway Eastbound				
Start Time	Left	Thru	Rght	App. Total	Left	Thru	Rght	App. Total	Left	Thru	Rght	App. Total	Left	Thru	Rght	App. Total	Int. Total
04:00 PM	10	0	0	10	0	20	4	24	1	2	0	3	1	11	0	12	49
04:15 PM	12	0	2	14	0	10	6	16	0	0	0	0	0	20	1	21	51
04:30 PM	13	3	0	16	0	16	7	23	2	0	0	2	1	21	2	24	65
04:45 PM	10	1	0	11	1	13	13	27	1	0	1	2	1	11	0	12	52
Total	45	4	2	51	1	59	30	90	4	2	1	7	3	63	3	69	217
05:00 PM	13	3	0	16	0	12	5	17	0	1	0	1	0	13	1	14	48
05:15 PM	8	4	2	14	0	7	3	10	1	0	0	1	3	15	0	18	43
05:30 PM	14	3	1	18	0	14	5	19	1	0	0	1	3	17	0	20	58
05:45 PM	9	1	0	10	0	11	3	14	1	0	0	1	0	13	1	14	39
Total	44	11	3	58	0	44	16	60	3	1	0	4	6	58	2	66	188
Grand Total	89	15	5	109	1	103	46	150	7	3	1	11	9	121	5	135	405
Apprch %	81.7	13.8	4.6		0.7	68.7	30.7		63.6	27.3	9.1		6.7	89.6	3.7		
Total %	22	3.7	1.2	26.9	0.2	25.4	11.4	37	1.7	0.7	0.2	2.7	2.2	29.9	1.2	33.3	

	Orozco Drive Southbound				Overlook Parkway Westbound				Orozco Drive Northbound				Overlook Parkway Eastbound				
Start Time	Left	Thru	Rght	App. Total	Left	Thru	Rght	App. Total	Left	Thru	Rght	App. Total	Left	Thru	Rght	App. Total	Int. Total
Peak Hour Analysis From 04:00 PM to 05:45 PM - Peak 1 of 1																	
Peak Hour for Entire Intersection Begins at 04:00 PM																	
04:00 PM	10	0	0	10	0	**20**	4	24	1	**2**	0	**3**	**1**	11	0	12	49
04:15 PM	12	0	**2**	14	0	10	6	16	0	0	0	0	0	20	1	21	51
04:30 PM	**13**	**3**	0	**16**	0	16	7	23	**2**	0	0	2	1	**21**	**2**	**24**	**65**
04:45 PM	10	1	0	11	**1**	13	**13**	**27**	1	0	**1**	2	1	11	0	12	52
Total Volume	45	4	2	51	1	59	30	90	4	2	1	7	3	63	3	69	217
% App. Total	88.2	7.8	3.9		1.1	65.6	33.3		57.1	28.6	14.3		4.3	91.3	4.3		
PHF	.865	.333	.250	.797	.250	.738	.577	.833	.500	.250	.250	.583	.750	.750	.375	.719	.835

Counts Unlimited Inc.
PO Box 1178
Corona, CA 92878
(951) 268-6268

City of Riverside
N/S: Orozco Drive
E/W: Overlook Parkway
Weather: Sunny

File Name : RIVOROLPM
Site Code : 11046011
Start Date : 3/30/2011
Page No : 2

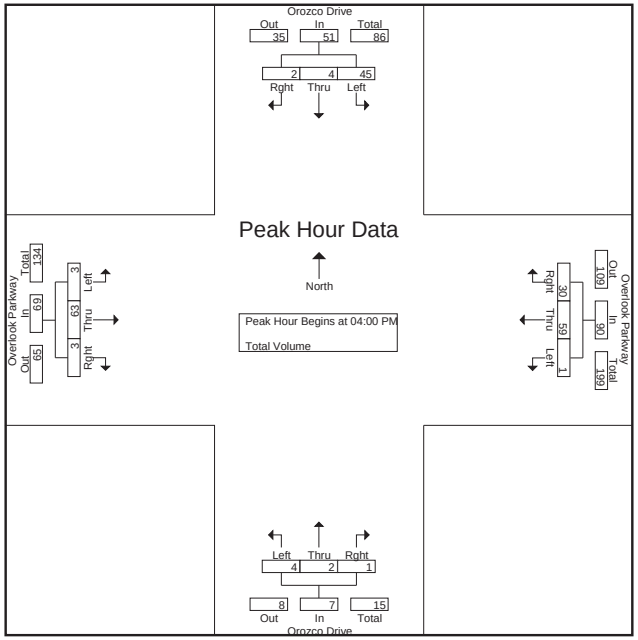

Peak Hour Analysis From 04:00 PM to 05:45 PM - Peak 1 of 1
Peak Hour for Each Approach Begins at:

	04:45 PM				04:00 PM				04:00 PM				04:15 PM			
+0 mins.	10	1	0	11	0	**20**	4	24	1	**2**	0	**3**	0	20	1	21
+15 mins.	13	3	0	16	0	10	6	16	0	0	0	0	**1**	**21**	**2**	**24**
+30 mins.	8	**4**	**2**	14	0	16	7	23	**2**	0	0	2	1	11	0	12
+45 mins.	**14**	3	1	**18**	**1**	13	**13**	**27**	1	0	**1**	2	0	13	1	14
Total Volume	45	11	3	59	1	59	30	90	4	2	1	7	2	65	4	71
% App. Total	76.3	18.6	5.1		1.1	65.6	33.3		57.1	28.6	14.3		2.8	91.5	5.6	
PHF	.804	.688	.375	.819	.250	.738	.577	.833	.500	.250	.250	.583	.500	.774	.500	.740

Counts Unlimited, Inc
PO Box 1178
Corona, CA 92878
(951) 268-6268

City of Riverside
Victoria Avenue
N/ Washington Street
24 Hour Directional Volume Count

RIV001
Site Code: 042-11046
Date Start: 30-Mar-11
Date End: 30-Mar-11

Start Time	30-Mar-11 Wed	Northbound Morning	Northbound Afternoon	Hour Totals Morning	Hour Totals Afternoon	Southbound Morning	Southbound Afternoon	Hour Totals Morning	Hour Totals Afternoon	Combined Totals Morning	Combined Totals Afternoon
12:00		4	61			8	70				
12:15		0	80			7	92				
12:30		5	62			7	63				
12:45		1	58	10	261	8	79	30	304	40	565
01:00		2	73			0	60				
01:15		3	76			5	58				
01:30		2	80			2	65				
01:45		1	75	8	304	3	55	10	238	18	542
02:00		2	79			5	74				
02:15		2	98			1	105				
02:30		2	109			3	102				
02:45		0	99	6	385	1	124	10	405	16	790
03:00		2	110			3	110				
03:15		3	84			0	119				
03:30		1	98			3	102				
03:45		6	108	12	400	0	108	6	439	18	839
04:00		3	103			3	92				
04:15		5	97			3	121				
04:30		4	101			3	114				
04:45		4	99	16	400	2	122	11	449	27	849
05:00		5	**96**			6	131				
05:15		10	**117**			10	123				
05:30		19	**95**			11	**141**				
05:45		16	**111**	50	419	18	**125**	45	520	95	939
06:00		14	94			18	**127**				
06:15		41	80			21	**128**				
06:30		49	84			20	109				
06:45		82	65	186	323	39	70	98	434	284	757
07:00		114	65			56	69				
07:15		**184**	54			76	75				
07:30		**195**	45			**96**	53				
07:45		**186**	33	679	197	**124**	81	352	278	1031	475
08:00		**167**	34			**92**	72				
08:15		164	32			**85**	60				
08:30		131	28			74	62				
08:45		104	29	566	123	62	44	313	238	879	361
09:00		84	32			63	43				
09:15		86	21			49	32				
09:30		95	22			56	36				
09:45		77	21	342	96	73	29	241	140	583	236
10:00		82	16			58	40				
10:15		68	16			64	25				
10:30		71	15			59	22				
10:45		66	16	287	63	50	23	231	110	518	173
11:00		63	11			76	25				
11:15		81	4			61	14				
11:30		67	8			61	11				
11:45		67	10	278	33	57	10	255	60	533	93
Total		2440	3004	2440	3004	1602	3615	1602	3615	4042	6619
Combined Total		5444		5444		5217		5217		10661	
AM Peak		07:15				07:30					
Vol.		732				397					
P.H.F.		0.938				0.800					
PM Peak			05:00				05:30				
Vol.			419				521				
P.H.F.			0.895				0.924				
Percentage		44.8%	55.2%			30.7%	69.3%				
ADT/AADT		ADT 10,661		AADT 10,661							

Counts Unlimited, Inc
PO Box 1178
Corona, CA 92878
(951) 268-6268

City of Riverside
Overlook Parkway
E/ Washington Street
24 Hour Directional Volume Count

RIV002
Site Code: 042-11046
Date Start: 30-Mar-11
Date End: 30-Mar-11

Start Time	30-Mar-11 Wed	Eastbound Morning	Eastbound Afternoon	Hour Totals Morning	Hour Totals Afternoon	Westbound Morning	Westbound Afternoon	Hour Totals Morning	Hour Totals Afternoon	Combined Totals Morning	Combined Totals Afternoon
12:00		10	20			2	18				
12:15		2	24			1	23				
12:30		0	12			0	15				
12:45		1	22	13	78	1	16	4	72	17	150
01:00		0	16			0	15				
01:15		0	14			0	15				
01:30		1	11			1	20				
01:45		0	19	1	60	0	19	1	69	2	129
02:00		0	14			0	19				
02:15		1	23			2	22				
02:30		1	16			0	16				
02:45		0	20	2	73	0	28	2	85	4	158
03:00		0	18			0	13				
03:15		1	30			0	17				
03:30		0	26			1	24				
03:45		0	27	1	101	0	14	1	68	2	169
04:00		1	13			1	22				
04:15		0	30			3	**23**				
04:30		0	29			3	**20**				
04:45		0	20	1	92	3	**24**	10	89	11	181
05:00		0	22			7	**23**				
05:15		0	**36**			10	15				
05:30		0	**35**			10	20				
05:45		2	**25**	2	118	5	12	32	70	34	188
06:00		3	**38**			1	27				
06:15		4	28			14	16				
06:30		5	23			26	20				
06:45		6	20	18	109	29	10	70	73	88	182
07:00		17	25			**35**	13				
07:15		17	25			**36**	11				
07:30		15	37			**46**	12				
07:45		**23**	17	72	104	**52**	11	169	47	241	151
08:00		**24**	24			33	11				
08:15		**25**	20			27	9				
08:30		**22**	22			39	7				
08:45		18	17	89	83	36	7	135	34	224	117
09:00		18	12			32	7				
09:15		20	11			34	6				
09:30		23	20			26	6				
09:45		23	12	84	55	28	10	120	29	204	84
10:00		16	9			28	1				
10:15		11	15			20	2				
10:30		23	9			20	3				
10:45		14	5	64	38	16	2	84	8	148	46
11:00		14	11			23	5				
11:15		18	1			20	2				
11:30		15	6			25	6				
11:45		10	9	57	27	20	2	88	15	145	42
Total		404	938	404	938	716	659	716	659	1120	1597
Combined Total		1342		1342		1375		1375		2717	
AM Peak		07:45				07:00					
Vol.		94				169					
P.H.F.		0.940				0.813					
PM Peak			05:15				04:15				
Vol.			134				90				
P.H.F.			0.882				0.938				
Percentage		30.1%	69.9%			52.1%	47.9%				
ADT/AADT		ADT 2,717		AADT 2,717							

Counts Unlimited, Inc
PO Box 1178
Corona, CA 92878
(951) 268-6268

City of Riverside
Bradly Street
E/ Washington Street
24 Hour Directional Volume Count

RIV003
Site Code: 042-11046
Date Start: 30-Mar-11
Date End: 30-Mar-11

Start Time	30-Mar-11 Wed	Eastbound Morning	Eastbound Afternoon	Hour Totals Morning	Hour Totals Afternoon	Westbound Morning	Westbound Afternoon	Hour Totals Morning	Hour Totals Afternoon	Combined Totals Morning	Combined Totals Afternoon
12:00		3	27			2	21				
12:15		2	17			1	19				
12:30		2	20			2	8				
12:45		1	18	8	82	3	24	8	72	16	154
01:00		4	13			1	22				
01:15		2	20			0	24				
01:30		0	24			0	21				
01:45		2	17	8	74	0	21	1	88	9	162
02:00		3	28			2	18				
02:15		2	18			0	24				
02:30		0	17			1	16				
02:45		1	25	6	88	0	22	3	80	9	168
03:00		0	31			0	20				
03:15		0	37			1	18				
03:30		1	23			0	22				
03:45		1	40	2	131	1	26	2	86	4	217
04:00		0	28			0	15				
04:15		0	25			2	**17**				
04:30		0	30			3	**25**				
04:45		0	25	0	108	5	**32**	10	89	10	197
05:00		1	31			8	**23**				
05:15		1	**34**			3	16				
05:30		0	**39**			8	19				
05:45		4	**38**	6	142	7	17	26	75	32	217
06:00		2	**33**			22	26				
06:15		8	25			14	18				
06:30		7	34			24	19				
06:45		10	37	27	129	31	23	91	86	118	215
07:00		6	22			**43**	14				
07:15		10	36			**44**	14				
07:30		9	25			**48**	15				
07:45		19	21	44	104	**36**	12	171	55	215	159
08:00		14	28			43	12				
08:15		14	17			27	7				
08:30		11	21			34	10				
08:45		13	20	52	86	30	7	134	36	186	122
09:00		13	19			24	4				
09:15		14	14			21	7				
09:30		10	13			25	5				
09:45		10	15	47	61	25	7	95	23	142	84
10:00		12	18			14	5				
10:15		10	8			21	7				
10:30		10	9			22	3				
10:45		**21**	6	53	41	17	3	74	18	127	59
11:00		**12**	12			20	6				
11:15		**24**	6			17	0				
11:30		**16**	6			20	2				
11:45		16	4	68	28	21	1	78	9	146	37
Total		321	1074	321	1074	693	717	693	717	1014	1791
Combined Total		1395		1395		1410		1410		2805	
AM Peak		10:45				07:00					
Vol.		73				171					
P.H.F.		0.760				0.891					
PM Peak			05:15				04:15				
Vol.			144				97				
P.H.F.			0.923				0.758				
Percentage		23.0%	77.0%			49.1%	50.9%				
ADT/AADT		ADT 2,805		AADT 2,805							

Counts Unlimited, Inc
PO Box 1178
Corona, CA 92878
(951) 268-6268

City of Riverside
Van Buren Boulevard
E/ Washington Street
24 Hour Directional Volume Count

RIV004
Site Code: 042-11046
Date Start: 30-Mar-11
Date End: 30-Mar-11

Start Time	30-Mar-11 Wed	Eastbound Morning	Eastbound Afternoon	Hour Totals Morning	Hour Totals Afternoon	Westbound Morning	Westbound Afternoon	Hour Totals Morning	Hour Totals Afternoon	Combined Totals Morning	Combined Totals Afternoon
12:00		61	248			37	241				
12:15		61	225			25	234				
12:30		48	222			19	255				
12:45		32	259	202	954	25	263	106	993	308	1947
01:00		29	242			15	230				
01:15		36	263			20	208				
01:30		23	270			13	248				
01:45		22	327	110	1102	14	209	62	895	172	1997
02:00		11	311			18	294				
02:15		16	347			11	**300**				
02:30		20	282			15	**315**				
02:45		24	335	71	1275	20	**351**	64	1260	135	2535
03:00		17	381			28	**336**				
03:15		26	335			35	264				
03:30		24	373			45	285				
03:45		19	351	86	1440	54	294	162	1179	248	2619
04:00		21	409			71	279				
04:15		33	389			117	230				
04:30		40	385			146	294				
04:45		28	417	122	1600	158	323	492	1126	614	2726
05:00		46	398			155	331				
05:15		61	**450**			152	308				
05:30		98	**439**			202	293				
05:45		90	**435**	295	1722	204	272	713	1204	1008	2926
06:00		107	**420**			218	293				
06:15		142	394			252	293				
06:30		173	347			336	250				
06:45		207	333	629	1494	295	246	1101	1082	1730	2576
07:00		231	285			330	250				
07:15		**333**	281			**447**	233				
07:30		**283**	266			**472**	200				
07:45		**304**	256	1151	1088	**484**	162	1733	845	2884	1933
08:00		**276**	236			**384**	187				
08:15		215	252			398	174				
08:30		243	199			325	172				
08:45		202	193	936	880	272	128	1379	661	2315	1541
09:00		194	195			253	125				
09:15		190	221			305	114				
09:30		182	187			263	107				
09:45		196	146	762	749	235	83	1056	429	1818	1178
10:00		203	134			239	94				
10:15		178	115			249	71				
10:30		205	153			234	53				
10:45		212	91	798	493	233	64	955	282	1753	775
11:00		186	99			246	46				
11:15		231	86			226	44				
11:30		234	74			218	43				
11:45		248	69	899	328	275	22	965	155	1864	483
Total		6061	13125	6061	13125	8788	10111	8788	10111	14849	23236
Combined Total		19186		19186		18899		18899		38085	
AM Peak		07:15				07:15					
Vol.		1196				1787					
P.H.F.		0.898				0.923					
PM Peak			05:15				02:15				
Vol.			1744				1302				
P.H.F.			0.969				0.927				
Percentage		31.6%	68.4%			46.5%	53.5%				
ADT/AADT		ADT 38,085		AADT 38,085							

Counts Unlimited, Inc
PO Box 1178
Corona, CA 92878
(951) 268-6268

City of Riverside
Arlington Avenue
W/ Alessandro Boulevard
24 Hour Directional Volume Count

RIV005
Site Code: 042-11046
Date Start: 31-Mar-11
Date End: 31-Mar-11

Start Time	31-Mar-11 Thu	Eastbound Morning	Eastbound Afternoon	Hour Totals Morning	Hour Totals Afternoon	Westbound Morning	Westbound Afternoon	Hour Totals Morning	Hour Totals Afternoon	Combined Totals Morning	Combined Totals Afternoon
12:00		52	211			14	180				
12:15		33	210			15	211				
12:30		25	218			18	211				
12:45		25	217	135	856	16	246	63	848	198	1704
01:00		28	238			16	234				
01:15		22	236			15	225				
01:30		13	240			9	211				
01:45		16	271	79	985	11	263	51	933	130	1918
02:00		17	239			7	293				
02:15		17	317			10	275				
02:30		9	280			11	289				
02:45		15	292	58	1128	11	320	39	1177	97	2305
03:00		11	323			18	293				
03:15		17	409			22	290				
03:30		18	405			24	242				
03:45		6	409	52	1546	34	283	98	1108	150	2654
04:00		10	391			35	272				
04:15		23	397			65	287				
04:30		18	390			77	256				
04:45		25	**425**	76	1603	82	**319**	259	1134	335	2737
05:00		39	**407**			92	**260**				
05:15		42	**415**			100	**356**				
05:30		79	**411**			128	**322**				
05:45		63	381	223	1614	124	271	444	1209	667	2823
06:00		73	344			117	254				
06:15		78	351			144	261				
06:30		111	315			209	216				
06:45		168	256	430	1266	271	238	741	969	1171	2235
07:00		164	261			325	200				
07:15		235	222			**420**	200				
07:30		**271**	238			**439**	149				
07:45		**272**	224	942	945	**473**	143	1657	692	2599	1637
08:00		**262**	235			**338**	105				
08:15		**268**	204			321	129				
08:30		213	192			294	139				
08:45		218	160	961	791	258	125	1211	498	2172	1289
09:00		191	168			239	90				
09:15		197	165			262	99				
09:30		174	163			243	71				
09:45		179	134	741	630	263	70	1007	330	1748	960
10:00		198	136			217	62				
10:15		212	118			221	58				
10:30		175	79			206	66				
10:45		195	73	780	406	193	67	837	253	1617	659
11:00		215	67			206	54				
11:15		193	47			227	31				
11:30		221	62			206	38				
11:45		240	54	869	230	217	41	856	164	1725	394
Total		5346	12000	5346	12000	7263	9315	7263	9315	12609	21315
Combined Total		17346		17346		16578		16578		33924	
AM Peak		07:30				07:15					
Vol.		1073				1670					
P.H.F.		0.986				0.883					
PM Peak			04:45				04:45				
Vol.			1658				1257				
P.H.F.			0.975				0.883				
Percentage		30.8%	69.2%			43.8%	56.2%				
ADT/AADT		ADT 33,924		AADT 33,924							

Counts Unlimited, Inc
PO Box 1178
Corona, CA 92878
(951) 268-6268

City of Riverside
Berry Road
W/ Trautwein Road
24 Hour Directional Volume Count

RIV006
Site Code: 042-11046
Date Start: 30-Mar-11
Date End: 30-Mar-11

Start Time	30-Mar-11 Wed	Eastbound Morning	Eastbound Afternoon	Hour Totals Morning	Hour Totals Afternoon	Westbound Morning	Westbound Afternoon	Hour Totals Morning	Hour Totals Afternoon	Combined Totals Morning	Combined Totals Afternoon
12:00		1	5			0	4				
12:15		3	9			0	8				
12:30		0	2			2	5				
12:45		0	4	4	20	1	7	3	24	7	44
01:00		0	7			0	4				
01:15		1	2			1	7				
01:30		0	3			0	6				
01:45		0	2	1	14	0	5	1	22	2	36
02:00		0	5			1	11				
02:15		0	2			0	6				
02:30		0	7			0	3				
02:45		0	4	0	18	0	8	1	28	1	46
03:00		1	**9**			0	**5**				
03:15		0	**3**			2	**9**				
03:30		1	**3**			0	**14**				
03:45		0	**9**	2	24	0	**14**	2	42	4	66
04:00		1	6			0	5				
04:15		0	4			0	3				
04:30		1	5			1	7				
04:45		1	6	3	21	1	9	2	24	5	45
05:00		3	8			0	9				
05:15		1	2			1	10				
05:30		1	0			0	10				
05:45		0	3	5	13	0	9	1	38	6	51
06:00		0	6			0	13				
06:15		1	5			1	8				
06:30		2	6			1	7				
06:45		2	5	5	22	6	11	8	39	13	61
07:00		**13**	2			0	9				
07:15		**7**	1			12	2				
07:30		**2**	2			5	5				
07:45		**7**	3	29	8	7	7	24	23	53	31
08:00		6	2			4	5				
08:15		5	0			1	5				
08:30		6	1			5	4				
08:45		4	3	21	6	3	7	13	21	34	27
09:00		4	2			3	10				
09:15		2	3			6	3				
09:30		2	0			5	2				
09:45		3	2	11	7	5	0	19	15	30	22
10:00		4	0			6	2				
10:15		3	2			1	3				
10:30		7	1			2	3				
10:45		2	2	16	5	5	5	14	13	30	18
11:00		4	2			**6**	1				
11:15		8	3			**7**	0				
11:30		4	0			**8**	1				
11:45		9	0	25	5	**9**	0	30	2	55	7
Total		122	163	122	163	118	291	118	291	240	454
Combined Total		285		285		409		409		694	
AM Peak		07:00				11:00					
Vol.		29				30					
P.H.F.		0.558				0.833					
PM Peak			03:00				03:00				
Vol.			24				42				
P.H.F.			0.667				0.750				
Percentage		42.8%	57.2%			28.9%	71.1%				
ADT/AADT		ADT 694		AADT 694							

Counts Unlimited, Inc
PO Box 1178
Corona, CA 92878
(951) 268-6268

City of Riverside
Van Buren Boulevard
W/ Trautwein Road
24 Hour Directional Volume Count

RIV007
Site Code: 042-11046
Date Start: 31-Mar-11
Date End: 31-Mar-11

Start Time	31-Mar-11 Thu	Eastbound Morning	Eastbound Afternoon	Hour Totals Morning	Hour Totals Afternoon	Westbound Morning	Westbound Afternoon	Hour Totals Morning	Hour Totals Afternoon	Combined Totals Morning	Combined Totals Afternoon
12:00		52	231			31	245				
12:15		41	226			26	226				
12:30		28	252			18	238				
12:45		28	230	149	939	18	229	93	938	242	1877
01:00		30	253			17	226				
01:15		25	236			15	220				
01:30		17	302			17	257				
01:45		18	263	90	1054	22	252	71	955	161	2009
02:00		11	272			14	263				
02:15		18	260			16	**320**				
02:30		18	306			16	**294**				
02:45		13	343	60	1181	21	**273**	67	1150	127	2331
03:00		11	357			26	**280**				
03:15		30	330			17	252				
03:30		25	321			35	264				
03:45		19	327	85	1335	24	255	102	1051	187	2386
04:00		15	321			50	226				
04:15		39	350			79	245				
04:30		48	**383**			109	255				
04:45		36	**389**	138	1443	103	242	341	968	479	2411
05:00		51	**413**			101	235				
05:15		76	**436**			111	274				
05:30		89	369			145	257				
05:45		100	400	316	1618	146	256	503	1022	819	2640
06:00		94	357			179	257				
06:15		144	353			211	239				
06:30		142	334			255	271				
06:45		190	320	570	1364	235	242	880	1009	1450	2373
07:00		196	274			**332**	228				
07:15		**274**	280			**402**	222				
07:30		**277**	270			**388**	197				
07:45		**272**	243	1019	1067	**295**	170	1417	817	2436	1884
08:00		**223**	275			321	152				
08:15		218	214			305	169				
08:30		223	192			244	141				
08:45		179	168	843	849	213	116	1083	578	1926	1427
09:00		172	189			207	114				
09:15		183	169			203	102				
09:30		180	175			215	107				
09:45		186	126	721	659	220	84	845	407	1566	1066
10:00		206	122			195	112				
10:15		203	119			190	76				
10:30		198	101			223	57				
10:45		220	72	827	414	202	59	810	304	1637	718
11:00		224	85			195	47				
11:15		220	61			190	34				
11:30		217	66			243	33				
11:45		252	49	913	261	244	18	872	132	1785	393
Total		5731	12184	5731	12184	7084	9331	7084	9331	12815	21515
Combined Total		17915		17915		16415		16415		34330	
AM Peak		07:15				07:00					
Vol.		1046				1417					
P.H.F.		0.944				0.881					
PM Peak			04:30				02:15				
Vol.			1621				1167				
P.H.F.			0.929				0.912				
Percentage		32.0%	68.0%			43.2%	56.8%				
ADT/AADT		ADT 34,330		AADT 34,330							

Counts Unlimited, Inc
PO Box 1178
Corona, CA 92878
(951) 268-6268

City of Riverside
Central Avenue
W/ Lochmoor Drive
24 Hour Directional Volume Count

RIV008
Site Code: 042-11046
Date Start: 31-Mar-11
Date End: 31-Mar-11

Start Time	31-Mar-11 Thu	Eastbound Morning	Eastbound Afternoon	Hour Totals Morning	Hour Totals Afternoon	Westbound Morning	Westbound Afternoon	Hour Totals Morning	Hour Totals Afternoon	Combined Totals Morning	Combined Totals Afternoon
12:00		20	112			25	96				
12:15		14	112			14	95				
12:30		19	117			16	109				
12:45		16	129	69	470	12	91	67	391	136	861
01:00		14	136			14	109				
01:15		15	123			7	125				
01:30		13	113			4	124				
01:45		10	115	52	487	3	103	28	461	80	948
02:00		14	131			13	130				
02:15		8	179			10	141				
02:30		12	140			8	90				
02:45		11	156	45	606	9	126	40	487	85	1093
03:00		7	163			6	123				
03:15		10	183			6	107				
03:30		9	189			15	124				
03:45		14	195	40	730	11	136	38	490	78	1220
04:00		7	201			11	123				
04:15		8	208			9	106				
04:30		21	214			16	143				
04:45		16	229	52	852	14	150	50	522	102	1374
05:00		9	**263**			14	**164**				
05:15		26	**267**			25	**180**				
05:30		26	**249**			42	**168**				
05:45		25	**233**	86	1012	58	**154**	139	666	225	1678
06:00		31	243			46	160				
06:15		50	211			62	131				
06:30		64	219			96	137				
06:45		88	190	233	863	119	125	323	553	556	1416
07:00		91	171			145	101				
07:15		104	121			165	113				
07:30		**125**	132			**186**	112				
07:45		**160**	129	480	553	**181**	92	677	418	1157	971
08:00		**121**	116			**192**	71				
08:15		**120**	100			**176**	87				
08:30		120	100			127	79				
08:45		117	94	478	410	130	72	625	309	1103	719
09:00		92	88			88	64				
09:15		80	90			111	67				
09:30		103	85			92	55				
09:45		92	74	367	337	89	71	380	257	747	594
10:00		81	80			91	42				
10:15		92	67			77	47				
10:30		89	53			86	41				
10:45		115	49	377	249	108	53	362	183	739	432
11:00		106	35			94	36				
11:15		127	43			102	32				
11:30		119	30			98	23				
11:45		101	31	453	139	82	31	376	122	829	261
Total		2732	6708	2732	6708	3105	4859	3105	4859	5837	11567
Combined Total		9440		9440		7964		7964		17404	
AM Peak		07:30				07:30					
Vol.		526				735					
P.H.F.		0.822				0.957					
PM Peak			05:00				05:00				
Vol.			1012				666				
P.H.F.			0.948				0.925				
Percentage		28.9%	71.1%			39.0%	61.0%				
ADT/AADT		ADT 17,404		AADT 17,404							

Counts Unlimited, Inc
PO Box 1178
Corona, CA 92878
(951) 268-6268

City of Riverside
Alessandro Avenue
W/ Sycamore Canyon Road
24 Hour Directional Volume Count

RIV009
Site Code: 042-11046
Date Start: 31-Mar-11
Date End: 31-Mar-11

Start Time	31-Mar-11 Thu	Eastbound Morning	Eastbound Afternoon	Hour Totals Morning	Hour Totals Afternoon	Westbound Morning	Westbound Afternoon	Hour Totals Morning	Hour Totals Afternoon	Combined Totals Morning	Combined Totals Afternoon
12:00		37	247			22	247				
12:15		36	251			36	277				
12:30		32	265			24	274				
12:45		29	280	134	1043	28	247	110	1045	244	2088
01:00		30	246			15	279				
01:15		23	263			21	292				
01:30		24	269			14	265				
01:45		18	250	95	1028	12	280	62	1116	157	2144
02:00		27	309			20	243				
02:15		22	277			13	316				
02:30		10	290			8	323				
02:45		14	305	73	1181	26	289	67	1171	140	2352
03:00		10	377			20	274				
03:15		23	392			30	288				
03:30		25	382			32	288				
03:45		16	423	74	1574	48	289	130	1139	204	2713
04:00		19	428			51	309				
04:15		28	423			68	298				
04:30		42	383			76	336				
04:45		58	**467**	147	1701	98	354	293	1297	440	2998
05:00		49	**419**			99	**385**				
05:15		74	**451**			109	**377**				
05:30		104	**500**			148	**392**				
05:45		118	397	345	1767	155	**359**	511	1513	856	3280
06:00		98	381			134	310				
06:15		157	373			218	308				
06:30		163	390			276	241				
06:45		189	300	607	1444	328	218	956	1077	1563	2521
07:00		192	292			**353**	220				
07:15		205	274			**438**	211				
07:30		227	252			**448**	217				
07:45		**300**	231	924	1049	**363**	186	1602	834	2526	1883
08:00		**244**	223			312	181				
08:15		**250**	167			272	175				
08:30		**266**	183			257	190				
08:45		249	155	1009	728	242	145	1083	691	2092	1419
09:00		202	145			229	132				
09:15		237	135			209	143				
09:30		234	154			234	116				
09:45		236	153	909	587	249	105	921	496	1830	1083
10:00		194	100			196	79				
10:15		248	114			202	103				
10:30		215	114			253	101				
10:45		229	77	886	405	222	70	873	353	1759	758
11:00		233	80			221	59				
11:15		274	79			240	53				
11:30		227	60			257	42				
11:45		271	55	1005	274	258	57	976	211	1981	485
Total		6208	12781	6208	12781	7584	10943	7584	10943	13792	23724
Combined Total		18989		18989		18527		18527		37516	
AM Peak		07:45				07:00					
Vol.		1060				1602					
P.H.F.		0.883				0.894					
PM Peak			04:45				05:00				
Vol.			1837				1513				
P.H.F.			0.919				0.965				
Percentage		32.7%	67.3%			40.9%	59.1%				
ADT/AADT		ADT 37,516		AADT 37,516							

Counts Unlimited, Inc
PO Box 1178
Corona, CA 92878
(951) 268-6268

City of Riverside
Van Buren Boulevard
W/ Plummer Street
24 Hour Directional Volume Count

RIV010
Site Code: 046-11046
Date Start: 31-Mar-11
Date End: 31-Mar-11

Start Time	31-Mar-11 Thu	Eastbound Morning	Eastbound Afternoon	Hour Totals Morning	Hour Totals Afternoon	Westbound Morning	Westbound Afternoon	Hour Totals Morning	Hour Totals Afternoon	Combined Totals Morning	Combined Totals Afternoon
12:00		33	216			37	205				
12:15		35	194			37	195				
12:30		18	207			22	243				
12:45		19	209	105	826	12	191	108	834	213	1660
01:00		26	194			20	210				
01:15		18	190			15	245				
01:30		8	226			16	221				
01:45		15	171	67	781	16	280	67	956	134	1737
02:00		14	197			20	224				
02:15		21	217			15	226				
02:30		10	209			10	231				
02:45		16	230	61	853	19	232	64	913	125	1766
03:00		9	232			24	230				
03:15		20	229			18	223				
03:30		25	254			22	253				
03:45		22	242	76	957	21	242	85	948	161	1905
04:00		27	220			30	**264**				
04:15		47	247			52	**248**				
04:30		54	231			61	**248**				
04:45		67	**270**	195	968	65	**281**	208	1041	403	2009
05:00		71	**286**			66	220				
05:15		95	**283**			97	269				
05:30		113	**288**			98	258				
05:45		112	241	391	1098	150	244	411	991	802	2089
06:00		125	251			133	248				
06:15		148	271			175	202				
06:30		174	246			195	208				
06:45		174	205	621	973	176	173	679	831	1300	1804
07:00		156	180			241	208				
07:15		191	226			**266**	177				
07:30		**240**	191			**226**	169				
07:45		**250**	160	837	757	**257**	141	990	695	1827	1452
08:00		**194**	158			**259**	139				
08:15		**207**	124			205	152				
08:30		169	133			210	133				
08:45		192	109	762	524	208	112	882	536	1644	1060
09:00		188	107			145	100				
09:15		171	133			172	142				
09:30		193	111			194	94				
09:45		175	98	727	449	186	118	697	454	1424	903
10:00		173	74			153	93				
10:15		169	78			150	87				
10:30		192	89			167	77				
10:45		191	47	725	288	179	69	649	326	1374	614
11:00		202	62			165	52				
11:15		172	40			181	48				
11:30		183	48			178	53				
11:45		191	30	748	180	187	21	711	174	1459	354
Total		5315	8654	5315	8654	5551	8699	5551	8699	10866	17353
Combined Total		13969		13969		14250		14250		28219	
AM Peak		07:30				07:15					
Vol.		891				1008					
P.H.F.		0.891				0.947					
PM Peak			04:45				04:00				
Vol.			1127				1041				
P.H.F.			0.978				0.926				
Percentage		38.0%	62.0%			39.0%	61.0%				
ADT/AADT		ADT 28,219		AADT 28,219							

Counts Unlimited, Inc
PO Box 1178
Corona, CA 92878
(951) 268-6268

City of Riverside
Washington Street
S/ Victoria Avenue
24 Hour Directional Volume Count

RIV011
Site Code: 042-11046
Date Start: 30-Mar-11
Date End: 30-Mar-11

Start Time	30-Mar-11 Wed	Northbound Morning	Northbound Afternoon	Hour Totals Morning	Hour Totals Afternoon	Southbound Morning	Southbound Afternoon	Hour Totals Morning	Hour Totals Afternoon	Combined Totals Morning	Combined Totals Afternoon
12:00		8	104			18	129				
12:15		5	115			12	110				
12:30		10	123			8	109				
12:45		5	123	28	465	9	101	47	449	75	914
01:00		5	100			6	101				
01:15		4	122			7	113				
01:30		2	119			6	106				
01:45		2	110	13	451	9	123	28	443	41	894
02:00		6	110			6	114				
02:15		5	**141**			3	139				
02:30		2	**138**			4	136				
02:45		3	**156**	16	545	4	146	17	535	33	1080
03:00		3	**140**			3	169				
03:15		8	134			4	157				
03:30		4	141			3	166				
03:45		11	135	26	550	7	177	17	669	43	1219
04:00		11	114			5	152				
04:15		19	140			3	196				
04:30		18	129			3	181				
04:45		29	125	77	508	3	169	14	698	91	1206
05:00		36	132			10	**190**				
05:15		42	118			15	**209**				
05:30		63	129			15	**202**				
05:45		68	113	209	492	22	**173**	62	774	271	1266
06:00		60	119			28	176				
06:15		125	123			31	171				
06:30		118	109			48	142				
06:45		192	88	495	439	61	116	168	605	663	1044
07:00		192	85			74	155				
07:15		**307**	76			76	122				
07:30		**285**	81			85	102				
07:45		**302**	63	1086	305	91	125	326	504	1412	809
08:00		**244**	59			81	119				
08:15		213	49			96	100				
08:30		226	45			82	108				
08:45		187	39	870	192	81	87	340	414	1210	606
09:00		169	50			70	89				
09:15		174	34			73	73				
09:30		160	42			90	73				
09:45		151	32	654	158	86	64	319	299	973	457
10:00		127	28			76	64				
10:15		134	31			70	47				
10:30		132	19			94	41				
10:45		119	29	512	107	**95**	44	335	196	847	303
11:00		109	13			**87**	43				
11:15		123	9			**104**	34				
11:30		118	19			**107**	25				
11:45		120	17	470	58	89	28	387	130	857	188
Total		4456	4270	4456	4270	2060	5716	2060	5716	6516	9986
Combined Total		8726		8726		7776		7776		16502	
AM Peak		07:15				10:45					
Vol.		1138				393					
P.H.F.		0.927				0.918					
PM Peak			02:15				05:00				
Vol.			575				774				
P.H.F.			0.921				0.926				
Percentage		51.1%	48.9%			26.5%	73.5%				
ADT/AADT		ADT 16,502		AADT 16,502							

Counts Unlimited, Inc
PO Box 1178
Corona, CA 92878
(951) 268-6268

City of Riverside
Alessandro Boulevard
S/ Arlington Avenue
24 Hour Directional Volume Count

RIV012
Site Code: 042-11046
Date Start: 31-Mar-11
Date End: 31-Mar-11

Start Time	31-Mar-11 Thu	Nirthbound Morning	Nirthbound Afternoon	Hour Totals Morning	Hour Totals Afternoon	Southbound Morning	Southbound Afternoon	Hour Totals Morning	Hour Totals Afternoon	Combined Totals Morning	Combined Totals Afternoon
12:00		24	272			50	312				
12:15		20	304			46	264				
12:30		22	335			45	298				
12:45		23	329	89	1240	36	302	177	1176	266	2416
01:00		15	303			31	291				
01:15		15	297			32	300				
01:30		14	311			24	335				
01:45		10	333	54	1244	19	348	106	1274	160	2518
02:00		17	341			26	371				
02:15		14	311			27	385				
02:30		17	**357**			18	395				
02:45		13	**396**	61	1405	22	405	93	1556	154	2961
03:00		31	**375**			18	520				
03:15		29	**328**			18	541				
03:30		40	336			19	513				
03:45		55	383	155	1422	16	566	71	2140	226	3562
04:00		56	298			15	566				
04:15		91	336			25	580				
04:30		121	337			31	587				
04:45		124	327	392	1298	28	653	99	2386	491	3684
05:00		140	338			58	**647**				
05:15		178	370			66	**725**				
05:30		228	337			108	**673**				
05:45		204	374	750	1419	94	**655**	326	2700	1076	4119
06:00		211	297			97	533				
06:15		310	285			103	546				
06:30		456	295			142	442				
06:45		586	282	1563	1159	208	380	550	1901	2113	3060
07:00		**533**	254			192	378				
07:15		**758**	235			229	328				
07:30		**853**	204			266	338				
07:45		**772**	180	2916	873	272	317	959	1361	3875	2234
08:00		514	143			266	300				
08:15		548	188			248	300				
08:30		484	166			261	301				
08:45		461	148	2007	645	228	273	1003	1174	3010	1819
09:00		388	131			209	247				
09:15		393	137			248	233				
09:30		335	100			224	237				
09:45		353	93	1469	461	228	206	909	923	2378	1384
10:00		312	89			234	187				
10:15		272	107			241	177				
10:30		301	86			247	125				
10:45		289	77	1174	359	236	117	958	606	2132	965
11:00		279	63			**257**	99				
11:15		287	45			**257**	84				
11:30		291	47			**277**	99				
11:45		298	46	1155	201	**289**	70	1080	352	2235	553
Total		11785	11726	11785	11726	6331	17549	6331	17549	18116	29275
Combined Total		23511		23511		23880		23880		47391	
AM Peak		07:00				11:00					
Vol.		2916				1080					
P.H.F.		0.855				0.934					
PM Peak			02:30				05:00				
Vol.			1456				2700				
P.H.F.			0.919				0.931				
Percentage		50.1%	49.9%			26.5%	73.5%				
ADT/AADT		ADT 47,391		AADT 47,391							

Counts Unlimited, Inc
PO Box 1178
Corona, CA 92878
(951) 268-6268

City of Riverside
Canyon Crest Drive
S/ Central Avenue
24 Hour Directional Volume Count

RIV013
Site Code: 042-11046
Date Start: 31-Mar-11
Date End: 31-Mar-11

Start Time	31-Mar-11 Thu	Northbound Morning	Northbound Afternoon	Hour Totals Morning	Hour Totals Afternoon	Southbound Morning	Southbound Afternoon	Hour Totals Morning	Hour Totals Afternoon	Combined Totals Morning	Combined Totals Afternoon
12:00		9	131			24	110				
12:15		13	102			22	122				
12:30		14	102			22	110				
12:45		6	104	42	439	18	110	86	452	128	891
01:00		11	99			12	106				
01:15		6	99			19	125				
01:30		8	88			14	111				
01:45		5	112	30	398	6	118	51	460	81	858
02:00		13	113			16	148				
02:15		7	123			8	161				
02:30		10	111			10	143				
02:45		13	119	43	466	6	138	40	590	83	1056
03:00		5	126			8	135				
03:15		13	112			6	156				
03:30		17	145			4	146				
03:45		11	107	46	490	13	204	31	641	77	1131
04:00		13	113			3	188				
04:15		24	98			3	200				
04:30		29	116			3	197				
04:45		27	120	93	447	3	183	12	768	105	1215
05:00		32	126			8	**238**				
05:15		43	119			8	**264**				
05:30		67	127			17	**275**				
05:45		81	**149**	223	521	22	**259**	55	1036	278	1557
06:00		82	**103**			18	209				
06:15		141	**134**			32	188				
06:30		192	**165**			27	177				
06:45		209	133	624	535	52	163	129	737	753	1272
07:00		233	116			45	138				
07:15		**271**	108			70	155				
07:30		**332**	71			92	129				
07:45		**374**	69	1210	364	78	140	285	562	1495	926
08:00		**249**	67			90	114				
08:15		232	76			91	130				
08:30		236	58			82	101				
08:45		210	56	927	257	64	100	327	445	1254	702
09:00		162	46			68	100				
09:15		164	58			61	96				
09:30		167	52			66	82				
09:45		130	59	623	215	92	82	287	360	910	575
10:00		122	29			77	80				
10:15		106	30			75	57				
10:30		110	47			99	54				
10:45		124	29	462	135	79	56	330	247	792	382
11:00		115	25			**81**	32				
11:15		99	28			**101**	51				
11:30		120	13			**108**	40				
11:45		122	24	456	90	**88**	29	378	152	834	242
Total		4779	4357	4779	4357	2011	6450	2011	6450	6790	10807
Combined Total		9136		9136		8461		8461		17597	
AM Peak		07:15				11:00					
Vol.		1226				378					
P.H.F.		0.820				0.875					
PM Peak			05:45				05:00				
Vol.			551				1036				
P.H.F.			0.835				0.942				
Percentage		52.3%	47.7%			23.8%	76.2%				
ADT/AADT		ADT 17,597		AADT 17,597							

Counts Unlimited, Inc
PO Box 1178
Corona, CA 92878
(951) 268-6268

City of Riverside
Washington Street
N/ Valle Vista Way
24 Hour Directional Volume Count

RIV014
Site Code: 042-11046
Date Start: 30-Mar-11
Date End: 30-Mar-11

Start Time	30-Mar-11 Wed	Northbound Morning	Northbound Afternoon	Hour Totals Morning	Hour Totals Afternoon	Southbound Morning	Southbound Afternoon	Hour Totals Morning	Hour Totals Afternoon	Combined Totals Morning	Combined Totals Afternoon
12:00		3	89			17	124				
12:15		5	82			10	90				
12:30		5	122			5	101				
12:45		5	99	18	392	11	92	43	407	61	799
01:00		7	103			7	89				
01:15		2	98			8	123				
01:30		1	102			5	99				
01:45		1	77	11	380	3	120	23	431	34	811
02:00		4	100			8	112				
02:15		5	**119**			4	136				
02:30		2	**134**			4	118				
02:45		3	**146**	14	499	3	121	19	487	33	986
03:00		5	**131**			3	166				
03:15		6	114			5	160				
03:30		5	130			5	175				
03:45		11	126	27	501	6	145	19	646	46	1147
04:00		11	102			4	201				
04:15		17	115			3	184				
04:30		14	126			6	169				
04:45		27	106	69	449	5	**196**	18	750	87	1199
05:00		19	135			6	**209**				
05:15		38	144			18	**226**				
05:30		63	123			19	**206**				
05:45		68	110	188	512	18	193	61	834	249	1346
06:00		80	96			33	178				
06:15		128	123			30	177				
06:30		131	98			64	135				
06:45		207	80	546	397	64	118	191	608	737	1005
07:00		197	65			85	130				
07:15		**290**	76			89	139				
07:30		**334**	74			88	83				
07:45		**288**	57	1109	272	98	98	360	450	1469	722
08:00		**221**	56			102	109				
08:15		223	41			81	110				
08:30		177	40			99	80				
08:45		166	32	787	169	81	77	363	376	1150	545
09:00		138	52			65	94				
09:15		164	27			63	84				
09:30		124	34			78	84				
09:45		113	27	539	140	84	45	290	307	829	447
10:00		106	27			81	52				
10:15		112	28			81	51				
10:30		117	21			66	35				
10:45		85	23	420	99	**92**	35	320	173	740	272
11:00		100	7			**109**	27				
11:15		97	9			**92**	29				
11:30		106	19			**103**	23				
11:45		84	10	387	45	87	17	391	96	778	141
Total		4115	3855	4115	3855	2098	5565	2098	5565	6213	9420
Combined Total		7970		7970		7663		7663		15633	
AM Peak		07:15				10:45					
Vol.		1133				396					
P.H.F.		0.848				0.908					
PM Peak			02:15				04:45				
Vol.			530				837				
P.H.F.			0.908				0.926				
Percentage		51.6%	48.4%			27.4%	72.6%				
ADT/AADT		ADT 15,633		AADT 15,633							

Counts Unlimited, Inc
PO Box 1178
Corona, CA 92878
(951) 268-6268

City of Riverside
Golden Star Avenue
N/ Valle Vista Way
24 Hour Directional Volume Count

RIV015
Site Code: 042-11046
Date Start: 30-Mar-11
Date End: 30-Mar-11

Start Time	30-Mar-11 Wed	Northbound Morning	Northbound Afternoon	Hour Totals Morning	Hour Totals Afternoon	Southbound Morning	Southbound Afternoon	Hour Totals Morning	Hour Totals Afternoon	Combined Totals Morning	Combined Totals Afternoon
12:00		0	3			1	6				
12:15		0	2			0	8				
12:30		0	6			0	2				
12:45		2	11	2	22	0	5	1	21	3	43
01:00		0	6			1	3				
01:15		0	8			2	7				
01:30		0	5			0	7				
01:45		0	2	0	21	0	3	3	20	3	41
02:00		0	6			1	8				
02:15		0	5			0	7				
02:30		0	7			1	6				
02:45		0	7	0	25	0	12	2	33	2	58
03:00		0	8			0	9				
03:15		0	6			0	7				
03:30		0	**7**			0	10				
03:45		0	**13**	0	34	0	5	0	31	0	65
04:00		0	**9**			0	3				
04:15		1	**10**			0	0				
04:30		0	5			0	6				
04:45		1	11	2	35	1	3	1	12	3	47
05:00		3	6			1	12				
05:15		1	3			1	6				
05:30		3	5			0	7				
05:45		1	9	8	23	0	**8**	2	33	10	56
06:00		5	6			0	**8**				
06:15		0	4			4	**11**				
06:30		2	5			1	**12**				
06:45		5	8	12	23	3	5	8	36	20	59
07:00		5	9			**13**	3				
07:15		3	7			**6**	10				
07:30		**4**	5			**5**	5				
07:45		**10**	6	22	27	**7**	4	31	22	53	49
08:00		**9**	6			6	4				
08:15		**9**	6			4	5				
08:30		3	6			5	1				
08:45		6	3	27	21	11	6	26	16	53	37
09:00		5	1			4	6				
09:15		7	5			4	1				
09:30		4	1			7	1				
09:45		4	1	20	8	5	3	20	11	40	19
10:00		3	1			7	0				
10:15		2	0			4	3				
10:30		6	3			4	1				
10:45		5	0	16	4	4	0	19	4	35	8
11:00		4	2			2	3				
11:15		8	2			4	1				
11:30		4	1			5	0				
11:45		3	0	19	5	1	0	12	4	31	9
Total		128	248	128	248	125	243	125	243	253	491
Combined Total		376		376		368		368		744	
AM Peak		07:30				07:00					
Vol.		32				31					
P.H.F.		0.800				0.596					
PM Peak			03:30				05:45				
Vol.			39				39				
P.H.F.			0.750				0.813				
Percentage		34.0%	66.0%			34.0%	66.0%				
ADT/AADT		ADT 744		AADT 744							

Counts Unlimited, Inc
PO Box 1178
Corona, CA 92878
(951) 268-6268

City of Riverside
Dauchy Avenue
N/ John F Kennedy Drive
24 Hour Directional Volume Count

RIV016
Site Code: 042-11046
Date Start: 30-Mar-11
Date End: 30-Mar-11

Start Time	30-Mar-11 Wed	Northbound Morning	Northbound Afternoon	Hour Totals Morning	Hour Totals Afternoon	Southbound Morning	Southbound Afternoon	Hour Totals Morning	Hour Totals Afternoon	Combined Totals Morning	Combined Totals Afternoon
12:00		0	8			0	1				
12:15		1	4			1	4				
12:30		0	7			0	4				
12:45		1	7	2	26	0	5	1	14	3	40
01:00		0	7			1	3				
01:15		1	5			0	6				
01:30		0	11			0	7				
01:45		1	8	2	31	0	10	1	26	3	57
02:00		0	14			0	6				
02:15		0	**13**			0	8				
02:30		1	**16**			0	10				
02:45		0	**27**	1	70	0	**7**	0	31	1	101
03:00		0	**20**			1	**6**				
03:15		0	9			0	**12**				
03:30		0	8			2	**14**				
03:45		0	7	0	44	0	5	3	37	3	81
04:00		2	6			0	8				
04:15		0	12			1	3				
04:30		0	8			1	6				
04:45		0	14	2	40	3	8	5	25	7	65
05:00		0	10			0	11				
05:15		0	8			3	8				
05:30		1	5			1	7				
05:45		0	7	1	30	2	7	6	33	7	63
06:00		7	15			2	5				
06:15		2	12			2	12				
06:30		6	12			6	9				
06:45		10	9	25	48	4	3	14	29	39	77
07:00		5	7			13	2				
07:15		**17**	8			10	1				
07:30		**31**	10			**15**	7				
07:45		**18**	9	71	34	**10**	5	48	15	119	49
08:00		**14**	13			**18**	4				
08:15		16	8			**14**	6				
08:30		10	4			13	4				
08:45		4	7	44	32	5	9	50	23	94	55
09:00		0	9			1	1				
09:15		4	3			3	1				
09:30		3	4			7	3				
09:45		3	4	10	20	4	1	15	6	25	26
10:00		4	4			6	2				
10:15		2	1			8	2				
10:30		7	2			5	1				
10:45		5	2	18	9	3	2	22	7	40	16
11:00		6	0			6	0				
11:15		4	0			7	4				
11:30		8	1			4	1				
11:45		10	0	28	1	4	0	21	5	49	6
Total		204	385	204	385	186	251	186	251	390	636
Combined Total		589		589		437		437		1026	
AM Peak		07:15				07:30					
Vol.		80				57					
P.H.F.		0.645				0.792					
PM Peak			02:15				02:45				
Vol.			76				39				
P.H.F.			0.704				0.696				
Percentage		34.6%	65.4%			42.6%	57.4%				
ADT/AADT		ADT 1,026		AADT 1,026							

Counts Unlimited, Inc
PO Box 1178
Corona, CA 92878
(951) 268-6268

City of Riverside
Trautwein Road
N/ John F Kennedy Drive
24 Hour Directional Volume Count

RIV017
Site Code: 042-11046
Date Start: 30-Mar-11
Date End: 30-Mar-11

Start Time	30-Mar-11 Wed	Northbound Morning	Northbound Afternoon	Hour Totals Morning	Hour Totals Afternoon	Southbound Morning	Southbound Afternoon	Hour Totals Morning	Hour Totals Afternoon	Combined Totals Morning	Combined Totals Afternoon
12:00		23	282			39	253				
12:15		12	262			28	260				
12:30		19	278			29	247				
12:45		12	238	66	1060	23	211	119	971	185	2031
01:00		7	208			25	283				
01:15		12	204			21	244				
01:30		11	232			13	270				
01:45		8	271	38	915	22	336	81	1133	119	2048
02:00		12	289			17	358				
02:15		9	**322**			16	353				
02:30		16	**320**			16	368				
02:45		11	**415**	48	1346	14	332	63	1411	111	2757
03:00		8	**394**			4	312				
03:15		19	292			4	363				
03:30		19	262			9	371				
03:45		23	262	69	1210	10	377	27	1423	96	2633
04:00		28	272			13	358				
04:15		35	275			14	393				
04:30		63	263			11	411				
04:45		61	261	187	1071	19	457	57	1619	244	2690
05:00		71	275			15	426				
05:15		113	283			18	495				
05:30		120	292			31	**509**				
05:45		130	309	434	1159	38	**521**	102	1951	536	3110
06:00		160	301			56	**519**				
06:15		197	286			58	**502**				
06:30		346	322			97	458				
06:45		381	279	1084	1188	147	380	358	1859	1442	3047
07:00		431	241			264	295				
07:15		**627**	255			**328**	326				
07:30		**613**	218			**257**	273				
07:45		**527**	217	2198	931	**195**	286	1044	1180	3242	2111
08:00		**464**	165			**268**	274				
08:15		485	308			265	266				
08:30		477	192			187	232				
08:45		340	153	1766	818	148	253	868	1025	2634	1843
09:00		322	152			144	216				
09:15		250	108			167	198				
09:30		259	99			148	209				
09:45		260	84	1091	443	167	157	626	780	1717	1223
10:00		276	104			172	150				
10:15		234	71			175	119				
10:30		242	61			196	93				
10:45		242	32	994	268	184	64	727	426	1721	694
11:00		225	46			210	73				
11:15		197	28			230	48				
11:30		247	27			209	62				
11:45		260	20	929	121	281	50	930	233	1859	354
Total		8904	10530	8904	10530	5002	14011	5002	14011	13906	24541
Combined Total		19434		19434		19013		19013		38447	
AM Peak		07:15				07:15					
Vol.		2231				1048					
P.H.F.		0.890				0.799					
PM Peak			02:15				05:30				
Vol.			1451				2051				
P.H.F.			0.874				0.984				
Percentage		45.8%	54.2%			26.3%	73.7%				
ADT/AADT		ADT 38,447		AADT 38,447							

Counts Unlimited, Inc
PO Box 1178
Corona, CA 92878
(951) 268-6268

City of Riverside
Washington Street
N/ Van Buren Boulevard
24 Hour Directional Volume Count

RIV018
Site Code: 042-11046
Date Start: 30-Mar-11
Date End: 30-Mar-11

Start Time	30-Mar-11 Wed	Northbound Morning	Northbound Afternoon	Hour Totals Morning	Hour Totals Afternoon	Southbound Morning	Southbound Afternoon	Hour Totals Morning	Hour Totals Afternoon	Combined Totals Morning	Combined Totals Afternoon
12:00		6	100			21	120				
12:15		4	96			10	113				
12:30		7	132			4	82				
12:45		8	100	25	428	9	107	44	422	69	850
01:00		5	106			6	97				
01:15		2	98			10	129				
01:30		1	116			4	100				
01:45		2	84	10	404	4	113	24	439	34	843
02:00		3	116			7	127				
02:15		6	**129**			4	135				
02:30		1	**147**			7	132				
02:45		3	**170**	13	562	3	127	21	521	34	1083
03:00		6	**140**			4	164				
03:15		8	126			4	161				
03:30		5	145			6	180				
03:45		11	134	30	545	4	146	18	651	48	1196
04:00		9	116			8	202				
04:15		15	119			5	190				
04:30		13	133			4	171				
04:45		26	133	63	501	6	**204**	23	767	86	1268
05:00		18	136			10	**198**				
05:15		39	156			19	**218**				
05:30		65	121			25	**197**				
05:45		62	121	184	534	17	199	71	812	255	1346
06:00		91	124			36	187				
06:15		116	122			48	183				
06:30		148	99			63	147				
06:45		182	94	537	439	71	123	218	640	755	1079
07:00		197	87			111	113				
07:15		**268**	93			**124**	148				
07:30		**320**	81			**102**	109				
07:45		**281**	74	1066	335	**118**	97	455	467	1521	802
08:00		**215**	67			**134**	99				
08:15		224	60			113	104				
08:30		188	50			102	76				
08:45		169	47	796	224	103	79	452	358	1248	582
09:00		121	49			82	72				
09:15		144	38			72	107				
09:30		119	43			77	75				
09:45		120	27	504	157	101	52	332	306	836	463
10:00		103	36			83	46				
10:15		111	23			93	50				
10:30		110	21			72	41				
10:45		84	23	408	103	97	28	345	165	753	268
11:00		97	8			106	20				
11:15		104	12			112	28				
11:30		109	18			94	23				
11:45		87	15	397	53	114	19	426	90	823	143
Total		4033	4285	4033	4285	2429	5638	2429	5638	6462	9923
Combined Total		8318		8318		8067		8067		16385	
AM Peak		07:15				07:15					
Vol.		1084				478					
P.H.F.		0.847				0.892					
PM Peak			02:15				04:45				
Vol.			586				817				
P.H.F.			0.862				0.937				
Percentage		48.5%	51.5%			30.1%	69.9%				
ADT/AADT		ADT 16,385		AADT 16,385							

Counts Unlimited, Inc
PO Box 1178
Corona, CA 92878
(951) 268-6268

City of Riverside
Wood Drive
N/ Van Buren Boulevard
24 Hour Directional Volume Count

RIV019
Site Code: 042-11046
Date Start: 30-Mar-11
Date End: 30-Mar-11

Start Time	30-Mar-11 Wed	Northbound Morning	Northbound Afternoon	Hour Totals Morning	Hour Totals Afternoon	Southbound Morning	Southbound Afternoon	Hour Totals Morning	Hour Totals Afternoon	Combined Totals Morning	Combined Totals Afternoon
12:00		4	67			5	49				
12:15		7	58			7	62				
12:30		5	59			5	64				
12:45		3	52	19	236	3	50	20	225	39	461
01:00		0	51			3	55				
01:15		1	42			2	67				
01:30		4	85			3	74				
01:45		1	63	6	241	2	81	10	277	16	518
02:00		4	74			4	75				
02:15		2	79			2	104				
02:30		1	**119**			6	128				
02:45		1	**164**	8	436	2	138	14	445	22	881
03:00		2	**86**			1	99				
03:15		4	**95**			0	103				
03:30		2	72			2	109				
03:45		2	82	10	335	2	122	5	433	15	768
04:00		2	83			8	111				
04:15		4	87			7	100				
04:30		3	71			9	78				
04:45		4	91	13	332	10	118	34	407	47	739
05:00		7	95			12	86				
05:15		19	81			12	107				
05:30		20	92			17	**121**				
05:45		17	94	63	362	16	**128**	57	442	120	804
06:00		12	116			27	**122**				
06:15		19	91			27	**113**				
06:30		55	80			67	85				
06:45		86	65	172	352	78	83	199	403	371	755
07:00		**103**	65			**114**	60				
07:15		**170**	54			**212**	51				
07:30		**179**	97			**248**	64				
07:45		**151**	54	603	270	**104**	72	678	247	1281	517
08:00		85	57			97	51				
08:15		78	53			76	60				
08:30		85	39			85	26				
08:45		82	33	330	182	54	32	312	169	642	351
09:00		59	48			61	34				
09:15		47	30			42	39				
09:30		45	25			45	43				
09:45		57	22	208	125	43	20	191	136	399	261
10:00		53	27			55	19				
10:15		39	20			57	14				
10:30		43	22			57	15				
10:45		52	12	187	81	53	15	222	63	409	144
11:00		35	8			44	10				
11:15		44	12			56	11				
11:30		44	8			53	10				
11:45		44	7	167	35	59	9	212	40	379	75
Total		1786	2987	1786	2987	1954	3287	1954	3287	3740	6274
Combined Total		4773		4773		5241		5241		10014	
AM Peak		07:00				07:00					
Vol.		603				678					
P.H.F.		0.842				0.683					
PM Peak			02:30				05:30				
Vol.			464				484				
P.H.F.			0.707				0.945				
Percentage		37.4%	62.6%			37.3%	62.7%				
ADT/AADT		ADT 10,014		AADT 10,014							

Counts Unlimited, Inc
PO Box 1178
Corona, CA 92878
(951) 268-6268

City of Riverside
Trautwein Road
N/ Van Buren Boulevard
24 Hour Directional Volume Count

RIV020
Site Code: 042-11046
Date Start: 30-Mar-11
Date End: 30-Mar-11

Start Time	30-Mar-11 Wed	Northbound Morning	Northbound Afternoon	Hour Totals Morning	Hour Totals Afternoon	Southbound Morning	Southbound Afternoon	Hour Totals Morning	Hour Totals Afternoon	Combined Totals Morning	Combined Totals Afternoon
12:00		9	162			10	126				
12:15		9	125			9	124				
12:30		8	125			10	111				
12:45		4	121	30	533	10	96	39	457	69	990
01:00		2	138			6	120				
01:15		3	123			4	108				
01:30		10	174			5	115				
01:45		5	151	20	586	6	131	21	474	41	1060
02:00		4	**180**			3	148				
02:15		3	**146**			8	142				
02:30		12	**197**			6	142				
02:45		5	**231**	24	754	5	143	22	575	46	1329
03:00		7	177			3	144				
03:15		6	142			5	142				
03:30		7	139			6	161				
03:45		5	142	25	600	8	136	22	583	47	1183
04:00		15	160			11	135				
04:15		15	160			12	157				
04:30		18	161			10	122				
04:45		19	185	67	666	13	164	46	578	113	1244
05:00		21	173			13	170				
05:15		39	168			13	**186**				
05:30		35	180			21	**175**				
05:45		40	175	135	696	35	**186**	82	717	217	1413
06:00		52	188			33	**212**				
06:15		88	193			40	153				
06:30		125	171			55	137				
06:45		153	173	418	725	63	132	191	634	609	1359
07:00		173	141			**122**	130				
07:15		**250**	138			**154**	125				
07:30		**271**	146			**173**	117				
07:45		**277**	119	971	544	**110**	87	559	459	1530	1003
08:00		**227**	99			80	112				
08:15		154	109			82	128				
08:30		126	94			88	127				
08:45		153	76	660	378	50	88	300	455	960	833
09:00		107	73			79	80				
09:15		107	82			79	74				
09:30		108	57			83	79				
09:45		114	57	436	269	79	67	320	300	756	569
10:00		124	48			81	64				
10:15		128	43			94	54				
10:30		125	40			86	32				
10:45		112	32	489	163	88	38	349	188	838	351
11:00		130	39			90	34				
11:15		121	19			102	14				
11:30		142	25			120	20				
11:45		144	14	537	97	127	17	439	85	976	182
Total		3812	6011	3812	6011	2390	5505	2390	5505	6202	11516
Combined Total		9823		9823		7895		7895		17718	
AM Peak		07:15				07:00					
Vol.		1025				559					
P.H.F.		0.925				0.808					
PM Peak			02:00				05:15				
Vol.			754				759				
P.H.F.			0.816				0.895				
Percentage		38.8%	61.2%			30.3%	69.7%				
ADT/AADT		ADT 17,718		AADT 17,718							

Counts Unlimited, Inc
PO Box 1178
Corona, CA 92878
(951) 268-6268

City of Riverside
Orange Terrace Parkway
N/ Van Buren Boulevard
24 Hour Directional Volume Count

RIV021
Site Code: 042-11046
Date Start: 31-Mar-11
Date End: 31-Mar-11

Start Time	31-Mar-11 Thu	Northbound Morning	Northbound Afternoon	Hour Totals Morning	Hour Totals Afternoon	Southbound Morning	Southbound Afternoon	Hour Totals Morning	Hour Totals Afternoon	Combined Totals Morning	Combined Totals Afternoon
12:00		4	66			4	45				
12:15		6	64			1	55				
12:30		4	59			0	54				
12:45		0	73	14	262	4	49	9	203	23	465
01:00		5	63			1	54				
01:15		7	59			3	65				
01:30		3	85			3	78				
01:45		4	94	19	301	4	63	11	260	30	561
02:00		4	67			4	54				
02:15		5	75			2	61				
02:30		1	84			8	64				
02:45		4	78	14	304	11	66	25	245	39	549
03:00		2	79			6	61				
03:15		4	97			14	59				
03:30		6	91			23	60				
03:45		3	**108**	15	375	20	70	63	250	78	625
04:00		2	**74**			23	61				
04:15		7	**94**			37	63				
04:30		11	**104**			32	64				
04:45		7	86	27	358	38	54	130	242	157	600
05:00		21	83			51	57				
05:15		20	106			62	**64**				
05:30		20	93			75	**76**				
05:45		12	80	73	362	77	**60**	265	257	338	619
06:00		21	98			80	**62**				
06:15		37	78			**135**	60				
06:30		**56**	80			**137**	47				
06:45		**52**	68	166	324	**81**	36	433	205	599	529
07:00		**70**	71			**103**	35				
07:15		**51**	76			63	48				
07:30		35	72			57	39				
07:45		45	59	201	278	67	27	290	149	491	427
08:00		29	46			74	32				
08:15		32	61			61	32				
08:30		47	52			67	23				
08:45		41	36	149	195	53	26	255	113	404	308
09:00		29	50			66	20				
09:15		26	30			43	26				
09:30		33	37			53	22				
09:45		43	22	131	139	51	11	213	79	344	218
10:00		40	14			54	12				
10:15		60	20			49	4				
10:30		57	21			61	7				
10:45		44	12	201	67	59	5	223	28	424	95
11:00		46	15			64	3				
11:15		37	9			42	8				
11:30		62	13			44	6				
11:45		53	12	198	49	59	3	209	20	407	69
Total		1208	3014	1208	3014	2126	2051	2126	2051	3334	5065
Combined Total		4222		4222		4177		4177		8399	
AM Peak		06:30				06:15					
Vol.		229				456					
P.H.F.		0.818				0.832					
PM Peak			03:45				05:15				
Vol.			380				262				
P.H.F.			0.880				0.840				
Percentage		28.6%	71.4%			50.9%	49.1%				
ADT/AADT		ADT 8,399		AADT 8,399							

Counts Unlimited, Inc
PO Box 1178
Corona, CA 92878
(951) 268-6268

City of Riverside
Orange Terrace Parkway
E/ Trautwein Road
24 Hour Directional Volume Count

RIV022
Site Code: 042-11046
Date Start: 30-Mar-11
Date End: 30-Mar-11

Start Time	30-Mar-11 Wed	Eastbound Morning	Eastbound Afternoon	Hour Totals Morning	Hour Totals Afternoon	Westbound Morning	Westbound Afternoon	Hour Totals Morning	Hour Totals Afternoon	Combined Totals Morning	Combined Totals Afternoon
12:00		1	71			15	76				
12:15		1	51			9	75				
12:30		3	65			11	69				
12:45		1	73	6	260	6	66	41	286	47	546
01:00		3	54			5	69				
01:15		1	42			5	82				
01:30		1	60			2	124				
01:45		1	70	6	226	6	166	18	441	24	667
02:00		4	**144**			5	152				
02:15		1	**157**			1	110				
02:30		1	**112**			3	72				
02:45		7	**96**	13	509	2	124	11	458	24	967
03:00		4	85			4	108				
03:15		6	87			3	121				
03:30		7	92			3	91				
03:45		6	88	23	352	2	103	12	423	35	775
04:00		10	83			3	110				
04:15		6	61			3	118				
04:30		19	72			3	144				
04:45		19	75	54	291	2	137	11	509	65	800
05:00		19	90			2	167				
05:15		33	90			5	168				
05:30		34	91			5	**193**				
05:45		39	75	125	346	4	**206**	16	734	141	1080
06:00		53	101			7	**187**				
06:15		61	113			19	**186**				
06:30		107	114			19	179				
06:45		103	104	324	432	62	170	107	722	431	1154
07:00		**184**	93			**156**	131				
07:15		**258**	109			**175**	118				
07:30		**261**	89			**127**	98				
07:45		**133**	66	836	357	**109**	96	567	443	1403	800
08:00		105	66			56	103				
08:15		109	101			60	84				
08:30		93	81			54	93				
08:45		81	48	388	296	38	92	208	372	596	668
09:00		90	53			47	82				
09:15		70	46			39	71				
09:30		85	30			40	56				
09:45		71	27	316	156	36	54	162	263	478	419
10:00		74	47			49	48				
10:15		60	26			57	46				
10:30		71	17			49	38				
10:45		59	11	264	101	50	20	205	152	469	253
11:00		63	16			67	18				
11:15		62	7			67	25				
11:30		61	12			52	23				
11:45		70	5	256	40	62	17	248	83	504	123
Total		2611	3366	2611	3366	1606	4886	1606	4886	4217	8252
Combined Total		5977		5977		6492		6492		12469	
AM Peak		07:00				07:00					
Vol.		836				567					
P.H.F.		0.801				0.810					
PM Peak			02:00				05:30				
Vol.			509				772				
P.H.F.			0.811				0.937				
Percentage		43.7%	56.3%			24.7%	75.3%				
ADT/AADT		ADT 12,469		AADT 12,469							

Counts Unlimited, Inc
PO Box 1178
Corona, CA 92878
(951) 268-6268

City of Riverside
Mission Grove Parkway
S/ Alessandro Boulevard
24 Hour Directional Volume Count

RIV023
Site Code: 042-11046
Date Start: 30-Mar-11
Date End: 30-Mar-11

Start Time	30-Mar-11 Wed	Northbound Morning	Northbound Afternoon	Hour Totals Morning	Hour Totals Afternoon	Southbound Morning	Southbound Afternoon	Hour Totals Morning	Hour Totals Afternoon	Combined Totals Morning	Combined Totals Afternoon
12:00		3	86			13	66				
12:15		6	87			7	72				
12:30		7	76			6	85				
12:45		5	54	21	303	4	73	30	296	51	599
01:00		1	69			7	85				
01:15		4	64			3	69				
01:30		1	59			2	84				
01:45		1	80	7	272	5	81	17	319	24	591
02:00		9	81			4	98				
02:15		7	98			4	89				
02:30		8	80			2	89				
02:45		3	96	27	355	8	111	18	387	45	742
03:00		3	85			2	76				
03:15		6	90			5	81				
03:30		2	84			3	80				
03:45		5	**92**	16	351	5	86	15	323	31	674
04:00		2	**87**			8	87				
04:15		8	**102**			7	113				
04:30		11	**90**			2	107				
04:45		9	74	30	353	10	97	27	404	57	757
05:00		14	98			3	**108**				
05:15		16	82			7	**116**				
05:30		17	82			12	**134**				
05:45		19	75	66	337	28	**148**	50	506	116	843
06:00		28	98			18	98				
06:15		23	81			18	115				
06:30		37	68			26	95				
06:45		65	74	153	321	48	99	110	407	263	728
07:00		64	58			78	67				
07:15		**82**	57			81	76				
07:30		**117**	56			64	72				
07:45		**120**	77	383	248	63	76	286	291	669	539
08:00		**68**	53			51	69				
08:15		78	65			60	67				
08:30		81	63			70	63				
08:45		65	45	292	226	58	51	239	250	531	476
09:00		53	36			62	35				
09:15		72	32			49	44				
09:30		72	30			66	48				
09:45		80	32	277	130	57	39	234	166	511	296
10:00		76	25			61	28				
10:15		59	27			61	14				
10:30		69	14			64	19				
10:45		75	23	279	89	74	21	260	82	539	171
11:00		61	9			**60**	16				
11:15		69	4			**67**	9				
11:30		78	6			**80**	11				
11:45		58	5	266	24	**83**	12	290	48	556	72
Total		1817	3009	1817	3009	1576	3479	1576	3479	3393	6488
Combined Total		4826		4826		5055		5055		9881	
AM Peak		07:15				11:00					
Vol.		387				290					
P.H.F.		0.806				0.873					
PM Peak			03:45				05:00				
Vol.			371				506				
P.H.F.			0.909				0.855				
Percentage		37.7%	62.3%			31.2%	68.8%				
ADT/AADT		ADT 9,881		AADT 9,881							

Counts Unlimited, Inc
PO Box 1178
Corona, CA 92878
(951) 268-6268

City of Riverside
Alessandro Boulevard
S/ Canyon Crest Drive
24 Hour Directional Volume Count

RIV024
Site Code: 042-11046
Date Start: 31-Mar-11
Date End: 31-Mar-11

Start Time	31-Mar-11 Thu	Northbound Morning	Northbound Afternoon	Hour Totals Morning	Hour Totals Afternoon	Southbound Morning	Southbound Afternoon	Hour Totals Morning	Hour Totals Afternoon	Combined Totals Morning	Combined Totals Afternoon
12:00		22	301			56	303				
12:15		24	332			55	307				
12:30		32	345			54	332				
12:45		24	353	102	1331	42	321	207	1263	309	2594
01:00		18	327			39	313				
01:15		13	296			41	345				
01:30		14	326			27	346				
01:45		15	341	60	1290	22	347	129	1351	189	2641
02:00		21	310			33	393				
02:15		19	**383**			27	448				
02:30		16	**389**			26	423				
02:45		24	**415**	80	1497	21	442	107	1706	187	3203
03:00		25	**418**			18	493				
03:15		34	374			20	563				
03:30		51	370			18	526				
03:45		56	384	166	1546	20	640	76	2222	242	3768
04:00		54	328			20	575				
04:15		95	329			25	644				
04:30		124	391			30	614				
04:45		129	352	402	1400	35	689	110	2522	512	3922
05:00		142	372			48	**699**				
05:15		181	412			83	**765**				
05:30		243	378			117	**767**				
05:45		235	368	801	1530	122	**720**	370	2951	1171	4481
06:00		233	328			104	622				
06:15		368	323			126	591				
06:30		532	320			165	496				
06:45		585	311	1718	1282	227	420	622	2129	2340	3411
07:00		627	305			243	404				
07:15		**806**	263			**272**	399				
07:30		**906**	249			**290**	387				
07:45		**770**	214	3109	1031	**320**	343	1125	1533	4234	2564
08:00		**629**	163			**302**	321				
08:15		575	217			267	327				
08:30		523	193			292	306				
08:45		462	180	2189	753	259	296	1120	1250	3309	2003
09:00		421	165			257	268				
09:15		386	173			271	229				
09:30		380	125			251	251				
09:45		321	120	1508	583	257	219	1036	967	2544	1550
10:00		317	99			270	196				
10:15		268	123			262	188				
10:30		331	106			273	127				
10:45		296	86	1212	414	272	122	1077	633	2289	1047
11:00		294	68			239	107				
11:15		292	48			299	96				
11:30		299	49			297	99				
11:45		316	62	1201	227	295	75	1130	377	2331	604
Total		12548	12884	12548	12884	7109	18904	7109	18904	19657	31788
Combined Total		25432		25432		26013		26013		51445	
AM Peak		07:15				07:15					
Vol.		3111				1184					
P.H.F.		0.858				0.925					
PM Peak			02:15				05:00				
Vol.			1605				2951				
P.H.F.			0.960				0.962				
Percentage		49.3%	50.7%			27.3%	72.7%				
ADT/AADT		ADT 51,445		AADT 51,445							

Page 1

Counts Unlimited, Inc
PO Box 1178
Corona, CA 92878
(951) 268-6268

City of Riverside
Overlook Parkway
W/ Kingdom Drive
24 Hour Directional Volume Count

RIV025WD
Site Code: 042-11046
Date Start: 29-Mar-11
Date End: 29-Mar-11

Start Time	29-Mar-11 Tue	Eastbound Morning	Eastbound Afternoon	Hour Totals Morning	Hour Totals Afternoon	Westbound Morning	Westbound Afternoon	Hour Totals Morning	Hour Totals Afternoon	Combined Totals Morning	Combined Totals Afternoon
12:00		0	11			1	**6**				
12:15		1	6			0	**13**				
12:30		0	9			0	**10**				
12:45		0	4	1	30	0	**3**	1	32	2	62
01:00		0	7			0	4				
01:15		1	6			0	8				
01:30		1	7			1	7				
01:45		1	2	3	22	0	7	1	26	4	48
02:00		0	1			0	6				
02:15		0	5			0	3				
02:30		0	7			0	11				
02:45		0	6	0	19	0	4	0	24	0	43
03:00		2	5			0	5				
03:15		0	**11**			1	6				
03:30		0	**15**			0	10				
03:45		0	**7**	2	38	0	6	1	27	3	65
04:00		0	**6**			1	4				
04:15		0	2			1	10				
04:30		0	9			0	8				
04:45		3	6	3	23	5	3	7	25	10	48
05:00		0	9			1	4				
05:15		0	10			2	10				
05:30		0	11			5	8				
05:45		0	7	0	37	1	7	9	29	9	66
06:00		0	10			1	7				
06:15		0	10			2	7				
06:30		0	4			6	6				
06:45		1	4	1	28	5	8	14	28	15	56
07:00		2	6			12	8				
07:15		5	3			7	6				
07:30		6	5			**6**	3				
07:45		3	9	16	23	**16**	2	41	19	57	42
08:00		10	7			**8**	4				
08:15		4	5			**14**	1				
08:30		7	3			3	3				
08:45		5	8	26	23	7	1	32	9	58	32
09:00		5	5			6	2				
09:15		7	7			10	1				
09:30		8	4			4	1				
09:45		5	4	25	20	8	1	28	5	53	25
10:00		3	2			4	3				
10:15		8	5			6	2				
10:30		4	0			6	0				
10:45		6	4	21	11	10	1	26	6	47	17
11:00		**8**	0			11	0				
11:15		**10**	0			13	0				
11:30		**4**	3			1	2				
11:45		**10**	2	32	5	9	1	34	3	66	8
Total		130	279	130	279	194	233	194	233	324	512
Combined Total		409		409		427		427		836	
AM Peak		11:00				07:30					
Vol.		32				44					
P.H.F.		0.800				0.688					
PM Peak			03:15				12:00				
Vol.			39				32				
P.H.F.			0.650				0.615				
Percentage		31.8%	68.2%			45.4%	54.6%				
ADT/AADT		ADT 836		AADT 836							

Counts Unlimited, Inc
PO Box 1178
Corona, CA 92878
(951) 268-6268

City of Riverside
Kingdom Drive
S/ Overlook Parkway
24 Hour Directional Volume Count

RIV026WD
Site Code: 042-11046
Date Start: 29-Mar-11
Date End: 29-Mar-11

Start Time	29-Mar-11 Tue	Northbound Morning	Northbound Afternoon	Hour Totals Morning	Hour Totals Afternoon	Southbound Morning	Southbound Afternoon	Hour Totals Morning	Hour Totals Afternoon	Combined Totals Morning	Combined Totals Afternoon
12:00		1	**5**			0	8				
12:15		0	**12**			1	3				
12:30		0	**8**			0	7				
12:45		0	**1**	1	26	0	1	1	19	2	45
01:00		0	3			0	7				
01:15		0	6			1	4				
01:30		0	5			0	4				
01:45		0	5	0	19	1	2	2	17	2	36
02:00		0	4			0	1				
02:15		0	1			0	5				
02:30		0	7			0	2				
02:45		0	3	0	15	0	5	0	13	0	28
03:00		0	2			1	2				
03:15		0	2			0	**5**				
03:30		0	7			0	**11**				
03:45		0	4	0	15	0	**6**	1	24	1	39
04:00		1	3			0	**4**				
04:15		1	8			0	2				
04:30		0	8			0	5				
04:45		4	1	6	20	3	3	3	14	9	34
05:00		0	2			0	7				
05:15		2	8			0	7				
05:30		7	3			1	7				
05:45		1	5	10	18	0	3	1	24	11	42
06:00		1	6			0	9				
06:15		1	9			0	7				
06:30		5	3			0	4				
06:45		5	8	12	26	1	3	1	23	13	49
07:00		8	5			1	2				
07:15		7	4			4	2				
07:30		**5**	2			4	3				
07:45		**14**	1	34	12	3	8	12	15	46	27
08:00		**8**	3			7	7				
08:15		**8**	1			4	3				
08:30		4	2			4	2				
08:45		6	1	26	7	3	6	18	18	44	25
09:00		7	1			4	5				
09:15		3	1			2	5				
09:30		2	2			1	4				
09:45		3	1	15	5	3	3	10	17	25	22
10:00		2	3			4	1				
10:15		2	1			6	2				
10:30		5	0			2	1				
10:45		12	1	21	5	7	4	19	8	40	13
11:00		7	0			**3**	0				
11:15		4	0			**7**	0				
11:30		1	2			**2**	3				
11:45		7	0	19	2	**8**	1	20	4	39	6
Total		144	170	144	170	88	196	88	196	232	366
Combined Total		314		314		284		284		598	
AM Peak		07:30				11:00					
Vol.		35				20					
P.H.F.		0.625				0.625					
PM Peak			12:00				03:15				
Vol.			26				26				
P.H.F.			0.542				0.591				
Percentage		45.9%	54.1%			31.0%	69.0%				
ADT/AADT		ADT 598		AADT 598							

Counts Unlimited, Inc
PO Box 1178
Corona, CA 92878
(951) 268-6268

City of Riverside
Crystal View Terrace
S/ Overlook Parkway
24 Hour Directional Volume Count

RIV027WD
Site Code: 042-11046
Date Start: 29-Mar-11
Date End: 29-Mar-11

Start Time	29-Mar-11 Tue	Northbound Morning	Northbound Afternoon	Hour Totals Morning	Hour Totals Afternoon	Southbound Morning	Southbound Afternoon	Hour Totals Morning	Hour Totals Afternoon	Combined Totals Morning	Combined Totals Afternoon
12:00		0	2			0	0				
12:15		0	0			0	0				
12:30		0	0			0	0				
12:45		0	0	0	2	0	0	0	0	0	2
01:00		0	1			0	2				
01:15		0	1			0	2				
01:30		1	0			1	0				
01:45		0	0	1	2	0	0	1	4	2	6
02:00		0	0			0	0				
02:15		0	0			0	0				
02:30		0	0			0	4				
02:45		0	0	0	0	0	0	0	4	0	4
03:00		1	0			1	0				
03:15		0	0			0	0				
03:30		0	1			0	1				
03:45		0	1	1	2	0	1	1	2	2	4
04:00		0	1			0	1				
04:15		0	1			0	0				
04:30		0	0			0	1				
04:45		2	**1**	2	3	2	1	2	3	4	6
05:00		0	**2**			0	2				
05:15		0	**4**			0	4				
05:30		0	**1**			0	1				
05:45		0	1	0	8	0	2	0	9	0	17
06:00		0	0			0	0				
06:15		0	3			0	**3**				
06:30		1	0			0	**1**				
06:45		0	1	1	4	0	**3**	0	7	1	11
07:00		0	1			0	**3**				
07:15		0	0			1	0				
07:30		1	1			0	1				
07:45		0	0	1	2	0	0	1	4	2	6
08:00		0	1			0	1				
08:15		**1**	2			1	1				
08:30		**2**	1			3	0				
08:45		**0**	0	3	4	0	0	4	2	7	6
09:00		**1**	0			1	1				
09:15		0	0			0	0				
09:30		1	0			2	0				
09:45		1	0	3	0	1	1	4	2	7	2
10:00		1	3			0	3				
10:15		1	0			2	0				
10:30		1	0			**1**	0				
10:45		0	0	3	3	**6**	0	9	3	12	6
11:00		0	0			**5**	0				
11:15		3	0			**3**	0				
11:30		0	0			0	0				
11:45		0	0	3	0	0	0	8	0	11	0
Total		18	30	18	30	30	40	30	40	48	70
Combined Total		48		48		70		70		118	
AM Peak		08:15				10:30					
Vol.		4				15					
P.H.F.		0.500				0.625					
PM Peak			04:45				06:15				
Vol.			8				10				
P.H.F.			0.500				0.625				
Percentage		37.5%	62.5%			42.9%	57.1%				
ADT/AADT		ADT 118		AADT 118							

Counts Unlimited, Inc
PO Box 1178
Corona, CA 92878
(951) 268-6268

City of Riverside
Cactus Avenue
E/ Crystal View Terrace
24 Hour Directional Volume Count

RIV028WD
Site Code: 042-11046
Date Start: 29-Mar-11
Date End: 29-Mar-11

Start Time	29-Mar-11 Tue	Eastbound Morning	Eastbound Afternoon	Hour Totals Morning	Hour Totals Afternoon	Westbound Morning	Westbound Afternoon	Hour Totals Morning	Hour Totals Afternoon	Combined Totals Morning	Combined Totals Afternoon
12:00		0	4			1	6				
12:15		0	1			0	8				
12:30		0	2			0	6				
12:45		1	6	1	13	1	9	2	29	3	42
01:00		0	5			1	5				
01:15		2	0			0	3				
01:30		0	3			0	5				
01:45		0	3	2	11	0	9	1	22	3	33
02:00		0	4			0	3				
02:15		0	3			0	**8**				
02:30		0	0			0	**8**				
02:45		1	**10**	1	17	0	**19**	0	38	1	55
03:00		0	**6**			0	**18**				
03:15		0	**13**			0	7				
03:30		0	**10**			0	9				
03:45		4	3	4	32	2	5	2	39	6	71
04:00		0	4			0	7				
04:15		0	5			2	8				
04:30		0	7			0	5				
04:45		0	6	0	22	0	12	2	32	2	54
05:00		0	11			0	13				
05:15		0	11			1	6				
05:30		0	11			0	3				
05:45		0	5	0	38	0	9	1	31	1	69
06:00		0	8			2	5				
06:15		1	6			1	6				
06:30		2	5			0	6				
06:45		4	7	7	26	6	11	9	28	16	54
07:00		6	2			7	3				
07:15		7	5			9	2				
07:30		**13**	5			**27**	6				
07:45		**6**	3	32	15	**24**	3	67	14	99	29
08:00		**4**	4			**27**	2				
08:15		**13**	1			**26**	3				
08:30		10	5			15	4				
08:45		3	0	30	10	8	1	76	10	106	20
09:00		3	1			8	0				
09:15		2	3			3	2				
09:30		4	3			7	3				
09:45		3	3	12	10	1	3	19	8	31	18
10:00		1	1			2	1				
10:15		5	0			5	1				
10:30		3	1			2	2				
10:45		2	2	11	4	1	2	10	6	21	10
11:00		5	0			4	2				
11:15		2	0			6	0				
11:30		8	0			3	1				
11:45		3	1	18	1	6	2	19	5	37	6
Total		118	199	118	199	208	262	208	262	326	461
Combined Total		317		317		470		470		787	
AM Peak		07:30				07:30					
Vol.		36				104					
P.H.F.		0.692				0.963					
PM Peak			02:45				02:15				
Vol.			39				53				
P.H.F.			0.750				0.697				
Percentage		37.2%	62.8%			44.3%	55.7%				
ADT/AADT		ADT 787		AADT 787							

Counts Unlimited, Inc
PO Box 1178
Corona, CA 92878
(951) 268-6268

City of Riverside
Mary Street
N/ Victoria Avenue
24 Hour Directional Volume Count

RIV001
Site Code: 042-12071
Date Start: 16-Feb-12
Date End: 16-Feb-12

Start Time	16-Feb-12 Thu	Northbound Morning	Northbound Afternoon	Hour Totals Morning	Hour Totals Afternoon	Southbound Morning	Southbound Afternoon	Hour Totals Morning	Hour Totals Afternoon	Combined Totals Morning	Combined Totals Afternoon
12:00		0	57			6	67				
12:15		4	55			1	72				
12:30		2	74			4	64				
12:45		0	44	6	230	1	67	12	270	18	500
01:00		0	60			0	60				
01:15		2	50			1	61				
01:30		0	61			1	52				
01:45		0	57	2	228	0	57	2	230	4	458
02:00		0	59			2	75				
02:15		0	**79**			0	99				
02:30		0	**99**			1	85				
02:45		0	**110**	0	347	2	91	5	350	5	697
03:00		1	**86**			0	90				
03:15		0	76			2	112				
03:30		0	61			0	103				
03:45		4	67	5	290	0	92	2	397	7	687
04:00		3	62			3	118				
04:15		5	57			2	107				
04:30		6	67			0	123				
04:45		7	62	21	248	2	**121**	7	469	28	717
05:00		13	77			2	**135**				
05:15		17	72			3	**148**				
05:30		9	78			1	**125**				
05:45		22	58	61	285	7	107	13	515	74	800
06:00		35	45			10	100				
06:15		42	49			14	87				
06:30		61	55			11	80				
06:45		63	40	201	189	26	80	61	347	262	536
07:00		106	32			27	72				
07:15		**158**	39			42	65				
07:30		**158**	28			47	80				
07:45		**166**	37	588	136	63	62	179	279	767	415
08:00		**158**	29			70	53				
08:15		135	21			35	42				
08:30		117	16			25	45				
08:45		99	21	509	87	33	43	163	183	672	270
09:00		85	9			37	32				
09:15		60	15			35	46				
09:30		64	7			40	30				
09:45		77	8	286	39	44	32	156	140	442	179
10:00		79	10			47	15				
10:15		72	14			47	24				
10:30		58	5			46	12				
10:45		59	6	268	35	52	13	192	64	460	99
11:00		62	1			**54**	12				
11:15		58	6			**69**	13				
11:30		67	1			**73**	7				
11:45		77	4	264	12	**65**	8	261	40	525	52
Total		2211	2126	2211	2126	1053	3284	1053	3284	3264	5410
Combined Total		4337		4337		4337		4337		8674	
AM Peak		07:15				11:00					
Vol.		640				261					
P.H.F.		0.964				0.894					
PM Peak			02:15				04:45				
Vol.			374				529				
P.H.F.			0.850				0.894				
Percentage		51.0%	49.0%			24.3%	75.7%				
ADT/AADT		ADT 8,674		AADT 8,674							

Counts Unlimited, Inc
PO Box 1178
Corona, CA 92878
(951) 268-6268

City of Riverside
Mary Street
N/ Lincoln Avenue
24 Hour Directional Volume Count

RIV002
Site Code: 042-12071
Date Start: 16-Feb-12
Date End: 16-Feb-12

Start Time	16-Feb-12 Thu	Northbound Morning	Northbound Afternoon	Hour Totals Morning	Hour Totals Afternoon	Southbound Morning	Southbound Afternoon	Hour Totals Morning	Hour Totals Afternoon	Combined Totals Morning	Combined Totals Afternoon
12:00		1	70			7	87				
12:15		3	78			5	100				
12:30		7	84			6	84				
12:45		4	68	15	300	3	74	21	345	36	645
01:00		2	78			1	68				
01:15		2	69			1	85				
01:30		4	82			2	83				
01:45		1	68	9	297	3	82	7	318	16	615
02:00		4	78			4	87				
02:15		2	89			3	113				
02:30		2	**105**			4	92				
02:45		1	**111**	9	383	2	117	13	409	22	792
03:00		1	**110**			1	118				
03:15		0	**96**			1	156				
03:30		2	65			1	118				
03:45		3	96	6	367	0	96	3	488	9	855
04:00		5	71			1	152				
04:15		7	76			4	138				
04:30		6	84			3	140				
04:45		13	72	31	303	4	**142**	12	572	43	875
05:00		13	94			5	**172**				
05:15		20	86			8	**183**				
05:30		12	83			7	**154**				
05:45		22	66	67	329	12	122	32	631	99	960
06:00		32	64			18	128				
06:15		54	61			24	93				
06:30		69	63			12	91				
06:45		77	50	232	238	39	90	93	402	325	640
07:00		116	50			38	82				
07:15		**181**	40			55	78				
07:30		**185**	34			57	92				
07:45		**174**	41	656	165	86	73	236	325	892	490
08:00		**165**	38			63	61				
08:15		168	29			49	60				
08:30		124	18			55	45				
08:45		107	25	564	110	44	41	211	207	775	317
09:00		112	16			45	43				
09:15		75	30			61	49				
09:30		73	12			54	40				
09:45		95	13	355	71	51	38	211	170	566	241
10:00		83	18			51	31				
10:15		81	20			67	26				
10:30		85	8			77	15				
10:45		74	6	323	52	57	13	252	85	575	137
11:00		73	4			**75**	17				
11:15		90	8			**92**	18				
11:30		82	3			**80**	5				
11:45		89	7	334	22	**95**	7	342	47	676	69
Total		2601	2637	2601	2637	1433	3999	1433	3999	4034	6636
Combined Total		5238		5238		5432		5432		10670	
AM Peak		07:15				11:00					
Vol.		705				342					
P.H.F.		0.953				0.900					
PM Peak			02:30				04:45				
Vol.			422				651				
P.H.F.			0.950				0.889				
Percentage		49.7%	50.3%			26.4%	73.6%				
ADT/AADT		ADT 10,670		AADT 10,670							

Counts Unlimited, Inc
PO Box 1178
Corona, CA 92878
(951) 268-6268

City of Riverside
Madison Street
S/ Victoria Avenue
24 Hour Directional Volume Count

RIV003
Site Code: 042-12071
Date Start: 16-Feb-12
Date End: 16-Feb-12

Start Time	16-Feb-12 Thu	Northbound Morning	Northbound Afternoon	Hour Totals Morning	Hour Totals Afternoon	Southbound Morning	Southbound Afternoon	Hour Totals Morning	Hour Totals Afternoon	Combined Totals Morning	Combined Totals Afternoon
12:00		0	10			1	12				
12:15		0	11			0	12				
12:30		0	5			0	7				
12:45		0	5	0	31	0	13	1	44	1	75
01:00		0	5			0	19				
01:15		0	4			0	19				
01:30		0	10			1	10				
01:45		0	13	0	32	1	12	2	60	2	92
02:00		0	4			0	9				
02:15		1	3			0	15				
02:30		0	9			0	11				
02:45		0	14	1	30	0	15	0	50	1	80
03:00		1	3			0	8				
03:15		1	5			0	14				
03:30		1	3			0	21				
03:45		1	**12**	4	23	1	14	1	57	5	80
04:00		0	**13**			0	12				
04:15		2	**10**			1	22				
04:30		0	**5**			1	18				
04:45		0	6	2	34	1	14	3	66	5	100
05:00		6	11			2	17				
05:15		0	11			2	**14**				
05:30		3	12			3	**25**				
05:45		2	4	11	38	3	**19**	10	75	21	113
06:00		5	5			2	**20**				
06:15		5	5			6	9				
06:30		11	7			6	22				
06:45		5	6	26	23	8	11	22	62	48	85
07:00		12	2			11	15				
07:15		**11**	5			7	15				
07:30		**13**	3			6	6				
07:45		**17**	4	53	14	5	15	29	51	82	65
08:00		**18**	4			7	11				
08:15		8	2			7	7				
08:30		7	3			9	9				
08:45		5	1	38	10	7	4	30	31	68	41
09:00		6	0			10	11				
09:15		6	1			6	2				
09:30		6	1			12	4				
09:45		6	2	24	4	11	9	39	26	63	30
10:00		12	2			10	4				
10:15		8	0			9	6				
10:30		6	2			12	5				
10:45		6	2	32	6	8	2	39	17	71	23
11:00		7	1			**12**	7				
11:15		6	1			**13**	3				
11:30		9	1			**10**	4				
11:45		13	0	35	3	**11**	4	46	18	81	21
Total		226	248	226	248	222	557	222	557	448	805
Combined Total		474		474		779		779		1253	
AM Peak		07:15				11:00					
Vol.		59				46					
P.H.F.		0.819				0.885					
PM Peak			03:45				05:15				
Vol.			40				78				
P.H.F.			0.714				0.780				
Percentage		47.7%	52.3%			28.5%	71.5%				
ADT/AADT		ADT 1,253		AADT 1,253							

Counts Unlimited, Inc
PO Box 1178
Corona, CA 92878
(951) 268-6268

City of Riverside
Madison Street
N/ Victoria Avenue
24 Hour Directional Volume Count

RIV004
Site Code: 042-12071
Date Start: 16-Feb-12
Date End: 16-Feb-12

Start Time	16-Feb-12 Thu	Northbound Morning	Northbound Afternoon	Hour Totals Morning	Hour Totals Afternoon	Southbound Morning	Southbound Afternoon	Hour Totals Morning	Hour Totals Afternoon	Combined Totals Morning	Combined Totals Afternoon
12:00		1	32			4	43				
12:15		1	29			0	37				
12:30		0	27			1	23				
12:45		0	26	2	114	1	34	6	137	8	251
01:00		0	22			1	53				
01:15		0	24			3	39				
01:30		0	34			0	31				
01:45		1	37	1	117	1	38	5	161	6	278
02:00		0	17			2	40				
02:15		3	23			1	49				
02:30		0	33			0	43				
02:45		0	35	3	108	0	47	3	179	6	287
03:00		1	27			0	31				
03:15		1	24			1	45				
03:30		3	**31**			1	54				
03:45		1	**32**	6	114	1	51	3	181	9	295
04:00		4	**46**			2	41				
04:15		3	**30**			4	**65**				
04:30		3	20			1	**60**				
04:45		2	27	12	123	2	**48**	9	214	21	337
05:00		8	35			3	**54**				
05:15		3	36			3	52				
05:30		8	32			8	58				
05:45		9	26	28	129	7	48	21	212	49	341
06:00		8	18			7	52				
06:15		14	27			12	36				
06:30		25	12			16	43				
06:45		21	20	68	77	29	37	64	168	132	245
07:00		33	16			27	52				
07:15		**45**	16			30	38				
07:30		**43**	12			25	18				
07:45		**45**	11	166	55	25	24	107	132	273	187
08:00		**65**	12			41	25				
08:15		31	12			24	24				
08:30		35	9			31	27				
08:45		41	3	172	36	19	13	115	89	287	125
09:00		29	7			38	18				
09:15		26	8			17	17				
09:30		38	6			23	13				
09:45		29	8	122	29	32	18	110	66	232	95
10:00		24	4			17	14				
10:15		26	6			22	10				
10:30		24	5			29	13				
10:45		28	6	102	21	29	4	97	41	199	62
11:00		24	5			**30**	13				
11:15		20	2			**31**	12				
11:30		33	1			**32**	10				
11:45		28	1	105	9	**39**	8	132	43	237	52
Total		787	932	787	932	672	1623	672	1623	1459	2555
Combined Total		1719		1719		2295		2295		4014	
AM Peak		07:15				11:00					
Vol.		198				132					
P.H.F.		0.762				0.805					
PM Peak			03:30				04:15				
Vol.			139				227				
P.H.F.			0.755				0.873				
Percentage		45.8%	54.2%			29.3%	70.7%				
ADT/AADT		ADT 4,014		AADT 4,014							

Counts Unlimited, Inc
PO Box 1178
Corona, CA 92878
(951) 268-6268

City of Riverside
Madison Street
N/ Lincoln Avenue
24 Hour Directional Volume Count

RIV005
Site Code: 042-12071
Date Start: 16-Feb-12
Date End: 16-Feb-12

Start Time	16-Feb-12 Thu	Northbound Morning	Northbound Afternoon	Hour Totals Morning	Hour Totals Afternoon	Southbound Morning	Southbound Afternoon	Hour Totals Morning	Hour Totals Afternoon	Combined Totals Morning	Combined Totals Afternoon
12:00		9	81			8	86				
12:15		4	75			7	87				
12:30		3	67			7	84				
12:45		3	72	19	295	7	71	29	328	48	623
01:00		3	49			3	98				
01:15		3	63			5	78				
01:30		2	76			1	76				
01:45		1	88	9	276	3	84	12	336	21	612
02:00		3	66			3	90				
02:15		8	86			4	100				
02:30		2	81			6	102				
02:45		0	91	13	324	5	88	18	380	31	704
03:00		6	86			3	87				
03:15		5	92			3	96				
03:30		8	**72**			1	**106**				
03:45		4	**82**	23	332	2	**103**	9	392	32	724
04:00		14	**110**			3	**106**				
04:15		8	**100**			6	**130**				
04:30		15	71			2	101				
04:45		15	68	52	349	7	91	18	428	70	777
05:00		26	79			15	104				
05:15		27	99			15	101				
05:30		31	93			21	124				
05:45		35	76	119	347	52	109	103	438	222	785
06:00		27	76			32	110				
06:15		42	66			22	85				
06:30		57	72			43	92				
06:45		73	48	199	262	57	88	154	375	353	637
07:00		70	74			51	109				
07:15		**103**	53			71	72				
07:30		**115**	43			54	52				
07:45		**103**	38	391	208	64	51	240	284	631	492
08:00		**126**	35			76	61				
08:15		87	35			52	52				
08:30		68	27			72	57				
08:45		91	28	372	125	57	47	257	217	629	342
09:00		81	28			54	46				
09:15		60	28			47	42				
09:30		84	17			58	32				
09:45		65	15	290	88	73	43	232	163	522	251
10:00		60	16			37	37				
10:15		66	18			58	23				
10:30		70	17			75	32				
10:45		64	16	260	67	69	14	239	106	499	173
11:00		85	10			**78**	25				
11:15		70	9			**72**	28				
11:30		69	12			**71**	22				
11:45		87	5	311	36	**89**	15	310	90	621	126
Total		2058	2709	2058	2709	1621	3537	1621	3537	3679	6246
Combined Total		4767		4767		5158		5158		9925	
AM Peak		07:15				11:00					
Vol.		447				310					
P.H.F.		0.887				0.871					
PM Peak			03:30				03:30				
Vol.			364				445				
P.H.F.			0.827				0.856				
Percentage		43.2%	56.8%			31.4%	68.6%				
ADT/AADT		ADT 9,925		AADT 9,925							

Counts Unlimited, Inc
PO Box 1178
Corona, CA 92878
(951) 268-6268

City of Riverside
Victoria Avenue
E/ Mary Street
24 Hour Directional Volume Count

RIV006
Site Code: 042-12071
Date Start: 16-Feb-12
Date End: 16-Feb-12

Start Time	16-Feb-12 Thu	Eastbound Morning	Eastbound Afternoon	Hour Totals Morning	Hour Totals Afternoon	Westbound Morning	Westbound Afternoon	Hour Totals Morning	Hour Totals Afternoon	Combined Totals Morning	Combined Totals Afternoon
12:00		1	43			0	64				
12:15		1	58			4	58				
12:30		0	37			2	84				
12:45		2	46	4	184	1	60	7	266	11	450
01:00		0	46			0	43				
01:15		0	50			0	39				
01:30		0	47			1	64				
01:45		1	59	1	202	0	77	1	223	2	425
02:00		0	82			1	78				
02:15		0	101			1	92				
02:30		1	117			1	**138**				
02:45		1	81	2	381	1	**144**	4	452	6	833
03:00		0	83			0	**102**				
03:15		0	102			5	**110**				
03:30		2	89			1	93				
03:45		0	82	2	356	1	98	7	403	9	759
04:00		2	87			1	79				
04:15		3	87			2	82				
04:30		0	83			2	99				
04:45		2	85	7	342	1	94	6	354	13	696
05:00		3	**90**			5	105				
05:15		6	**106**			6	90				
05:30		17	**100**			9	108				
05:45		7	**100**	33	396	15	117	35	420	68	816
06:00		17	84			7	74				
06:15		19	55			19	68				
06:30		46	37			36	81				
06:45		76	52	158	228	38	51	100	274	258	502
07:00		92	35			64	40				
07:15		**157**	31			**90**	42				
07:30		**175**	37			**96**	33				
07:45		**188**	33	612	136	**146**	30	396	145	1008	281
08:00		**125**	30			**154**	49				
08:15		116	20			76	28				
08:30		74	15			73	33				
08:45		74	19	389	84	64	21	367	131	756	215
09:00		53	14			47	29				
09:15		49	26			54	29				
09:30		41	11			57	20				
09:45		48	9	191	60	53	16	211	94	402	154
10:00		40	12			48	16				
10:15		44	7			52	9				
10:30		43	4			49	5				
10:45		44	5	171	28	45	13	194	43	365	71
11:00		41	13			63	13				
11:15		44	6			40	4				
11:30		41	3			63	3				
11:45		41	3	167	25	42	4	208	24	375	49
Total		1737	2422	1737	2422	1536	2829	1536	2829	3273	5251
Combined Total		4159		4159		4365		4365		8524	
AM Peak		07:15				07:15					
Vol.		645				486					
P.H.F.		0.858				0.789					
PM Peak			05:00				02:30				
Vol.			396				494				
P.H.F.			0.846				0.858				
Percentage		41.8%	58.2%			35.2%	64.8%				
ADT/AADT		ADT 8,524		AADT 8,524							

Counts Unlimited, Inc
PO Box 1178
Corona, CA 92878
(951) 268-6268

City of Riverside
Victoria Avenue
E/ Madison Street
24 Hour Directional Volume Count

RIV007
Site Code: 042-12071
Date Start: 16-Feb-12
Date End: 16-Feb-12

Start Time	16-Feb-12 Thu	Eastbound Morning	Eastbound Afternoon	Hour Totals Morning	Hour Totals Afternoon	Westbound Morning	Westbound Afternoon	Hour Totals Morning	Hour Totals Afternoon	Combined Totals Morning	Combined Totals Afternoon
12:00		1	60			2	59				
12:15		0	50			1	41				
12:30		3	47			0	53				
12:45		3	52	7	209	1	50	4	203	11	412
01:00		1	55			1	45				
01:15		3	55			0	38				
01:30		0	46			1	49				
01:45		0	60	4	216	2	55	4	187	8	403
02:00		3	64			2	50				
02:15		1	67			1	59				
02:30		0	69			1	**73**				
02:45		2	82	6	282	0	**82**	4	264	10	546
03:00		1	79			0	**64**				
03:15		0	83			1	**70**				
03:30		1	81			2	72				
03:45		0	90	2	333	0	58	3	264	5	597
04:00		4	78			5	57				
04:15		4	**112**			1	57				
04:30		0	**103**			5	59				
04:45		1	**95**	9	388	5	61	16	234	25	622
05:00		3	**107**			7	57				
05:15		4	111			7	77				
05:30		8	93			17	66				
05:45		6	91	21	402	12	62	43	262	64	664
06:00		14	89			15	39				
06:15		9	59			29	49				
06:30		16	46			31	45				
06:45		35	54	74	248	56	37	131	170	205	418
07:00		64	59			66	30				
07:15		71	44			**88**	23				
07:30		**84**	29			**101**	25				
07:45		**101**	28	320	160	**105**	15	360	93	680	253
08:00		**100**	24			**114**	18				
08:15		**84**	39			80	19				
08:30		55	26			66	16				
08:45		46	21	285	110	83	10	343	63	628	173
09:00		45	25			57	21				
09:15		45	23			47	12				
09:30		32	15			65	19				
09:45		56	17	178	80	56	15	225	67	403	147
10:00		40	15			39	7				
10:15		34	16			35	10				
10:30		41	12			49	12				
10:45		37	6	152	49	39	6	162	35	314	84
11:00		44	13			52	8				
11:15		36	12			42	4				
11:30		43	9			53	4				
11:45		44	7	167	41	33	3	180	19	347	60
Total		1225	2518	1225	2518	1475	1861	1475	1861	2700	4379
Combined Total		3743		3743		3336		3336		7079	
AM Peak		07:30				07:15					
Vol.		369				408					
P.H.F.		0.913				0.895					
PM Peak			04:15				02:30				
Vol.			417				289				
P.H.F.			0.931				0.881				
Percentage		32.7%	67.3%			44.2%	55.8%				
ADT/AADT		ADT 7,079		AADT 7,079							

Counts Unlimited, Inc
PO Box 1178
Corona, CA 92878
(951) 268-6268

City of Riverside
Victoria Avenue
W/ Madison Street
24 Hour Directional Volume Count

RIV008
Site Code: 042-12071
Date Start: 16-Feb-12
Date End: 16-Feb-12

Start Time	16-Feb-12 Thu	Eastbound Morning	Eastbound Afternoon	Hour Totals Morning	Hour Totals Afternoon	Westbound Morning	Westbound Afternoon	Hour Totals Morning	Hour Totals Afternoon	Combined Totals Morning	Combined Totals Afternoon
12:00		0	46			4	47				
12:15		0	37			0	41				
12:30		2	42			0	40				
12:45		1	42	3	167	1	44	5	172	8	339
01:00		0	31			0	36				
01:15		0	52			1	35				
01:30		1	37			1	35				
01:45		0	52	1	172	1	50	3	156	4	328
02:00		0	43			1	48				
02:15		0	48			0	**54**				
02:30		0	50			1	**63**				
02:45		2	68	2	209	0	**73**	2	238	4	447
03:00		1	64			0	**56**				
03:15		0	62			1	54				
03:30		0	58			1	56				
03:45		0	70	1	254	1	55	3	221	4	475
04:00		5	66			4	45				
04:15		2	**85**			1	50				
04:30		1	**70**			3	61				
04:45		0	**77**	8	298	3	56	11	212	19	510
05:00		2	**85**			4	47				
05:15		4	80			5	58				
05:30		4	72			10	61				
05:45		4	68	14	305	12	48	31	214	45	519
06:00		11	66			11	35				
06:15		6	41			26	37				
06:30		14	28			27	42				
06:45		22	34	53	169	46	32	110	146	163	315
07:00		54	29			53	24				
07:15		57	26			64	21				
07:30		**83**	20			**82**	15				
07:45		**90**	23	284	98	**88**	12	287	72	571	170
08:00		**88**	17			**84**	15				
08:15		**69**	21			**68**	12				
08:30		51	15			51	15				
08:45		43	14	251	67	62	10	265	52	516	119
09:00		35	21			49	16				
09:15		41	11			36	11				
09:30		34	12			39	18				
09:45		42	9	152	53	46	10	170	55	322	108
10:00		39	7			33	7				
10:15		27	14			22	6				
10:30		30	7			36	11				
10:45		28	4	124	32	29	4	120	28	244	60
11:00		29	9			38	5				
11:15		24	4			30	4				
11:30		34	3			41	4				
11:45		29	4	116	20	30	4	139	17	255	37
Total		1009	1844	1009	1844	1146	1583	1146	1583	2155	3427
Combined Total		2853		2853		2729		2729		5582	
AM Peak		07:30				07:30					
Vol.		330				322					
P.H.F.		0.917				0.915					
PM Peak			04:15				02:15				
Vol.			317				246				
P.H.F.			0.932				0.842				
Percentage		35.4%	64.6%			42.0%	58.0%				
ADT/AADT		ADT 5,582		AADT 5,582							

Counts Unlimited, Inc
PO Box 1178
Corona, CA 92878
(951) 268-6268

City of Riverside
Victoria Avenue
E/ Adams Street
24 Hour Directional Volume Count

RIV009
Site Code: 042-12071
Date Start: 16-Feb-12
Date End: 16-Feb-12

Start Time	16-Feb-12 Thu	Eastbound Morning	Eastbound Afternoon	Hour Totals Morning	Hour Totals Afternoon	Westbound Morning	Westbound Afternoon	Hour Totals Morning	Hour Totals Afternoon	Combined Totals Morning	Combined Totals Afternoon
12:00		1	31			4	38				
12:15		0	24			0	25				
12:30		0	31			0	29				
12:45		1	35	2	121	0	40	4	132	6	253
01:00		0	33			1	35				
01:15		0	27			0	21				
01:30		1	30			0	32				
01:45		0	35	1	125	1	29	2	117	3	242
02:00		0	35			0	37				
02:15		0	38			0	45				
02:30		1	43			1	43				
02:45		0	56	1	172	0	**63**	1	188	2	360
03:00		0	59			0	**50**				
03:15		0	59			0	**50**				
03:30		0	57			0	**53**				
03:45		1	60	1	235	0	60	0	213	1	448
04:00		1	52			2	43				
04:15		1	**73**			0	47				
04:30		0	**57**			1	53				
04:45		0	**53**	2	235	2	47	5	190	7	425
05:00		0	**68**			2	50				
05:15		2	68			4	54				
05:30		3	52			4	52				
05:45		5	61	10	249	6	39	16	195	26	444
06:00		7	49			8	39				
06:15		6	35			17	36				
06:30		14	24			15	33				
06:45		16	27	43	135	30	24	70	132	113	267
07:00		36	26			37	15				
07:15		47	22			44	14				
07:30		**84**	21			**80**	10				
07:45		**85**	14	252	83	**65**	8	226	47	478	130
08:00		**79**	16			**65**	8				
08:15		**70**	17			**60**	17				
08:30		60	14			40	9				
08:45		37	7	246	54	48	5	213	39	459	93
09:00		26	16			41	10				
09:15		35	10			38	9				
09:30		19	9			32	14				
09:45		30	10	110	45	37	10	148	43	258	88
10:00		30	10			39	3				
10:15		20	13			16	2				
10:30		27	8			31	8				
10:45		24	7	101	38	22	3	108	16	209	54
11:00		17	4			28	1				
11:15		25	4			29	7				
11:30		22	0			35	2				
11:45		23	3	87	11	24	1	116	11	203	22
Total		856	1503	856	1503	909	1323	909	1323	1765	2826
Combined Total		2359		2359		2232		2232		4591	
AM Peak		07:30				07:30					
Vol.		318				270					
P.H.F.		0.935				0.844					
PM Peak			04:15				02:45				
Vol.			251				216				
P.H.F.			0.860				0.857				
Percentage		36.3%	63.7%			40.7%	59.3%				
ADT/AADT		ADT 4,591		AADT 4,591							

Counts Unlimited, Inc
PO Box 1178
Corona, CA 92878
(951) 268-6268

City of Riverside
Dufferin Street
W/ Washington Street
24 Hour Directional Volume Count

RIV010
Site Code: 042-12071
Date Start: 16-Feb-12
Date End: 16-Feb-12

Start Time	16-Feb-12 Thu	Eastbound Morning	Eastbound Afternoon	Hour Totals Morning	Hour Totals Afternoon	Westbound Morning	Westbound Afternoon	Hour Totals Morning	Hour Totals Afternoon	Combined Totals Morning	Combined Totals Afternoon
12:00		0	8			0	10				
12:15		0	7			0	8				
12:30		1	8			0	4				
12:45		0	10	1	33	1	6	1	28	2	61
01:00		1	17			0	6				
01:15		0	13			0	6				
01:30		1	7			0	5				
01:45		2	10	4	47	0	6	0	23	4	70
02:00		0	11			0	6				
02:15		0	14			2	5				
02:30		0	12			0	8				
02:45		0	14	0	51	0	7	2	26	2	77
03:00		0	10			1	7				
03:15		0	8			0	**6**				
03:30		0	20			1	**5**				
03:45		0	14	0	52	0	**8**	2	26	2	78
04:00		0	12			0	**11**				
04:15		0	**19**			0	6				
04:30		0	**16**			0	1				
04:45		1	**15**	1	62	1	5	1	23	2	85
05:00		1	**18**			0	5				
05:15		2	11			0	10				
05:30		3	17			0	6				
05:45		3	14	9	60	2	5	2	26	11	86
06:00		1	20			2	3				
06:15		7	10			1	8				
06:30		7	16			6	4				
06:45		9	3	24	49	8	2	17	17	41	66
07:00		13	12			12	1				
07:15		6	12			**15**	2				
07:30		7	5			**22**	2				
07:45		7	7	33	36	**21**	3	70	8	103	44
08:00		4	9			**15**	4				
08:15		8	4			8	3				
08:30		7	7			5	0				
08:45		7	6	26	26	11	0	39	7	65	33
09:00		8	7			3	0				
09:15		3	1			12	1				
09:30		10	4			5	3				
09:45		12	9	33	21	7	1	27	5	60	26
10:00		13	4			6	2				
10:15		7	6			4	1				
10:30		10	4			5	0				
10:45		8	2	38	16	5	2	20	5	58	21
11:00		**12**	5			2	0				
11:15		**13**	3			5	0				
11:30		**12**	1			2	0				
11:45		**11**	2	48	11	6	0	15	0	63	11
Total		217	464	217	464	196	194	196	194	413	658
Combined Total		681		681		390		390		1071	
AM Peak		11:00				07:15					
Vol.		48				73					
P.H.F.		0.923				0.830					
PM Peak			04:15				03:15				
Vol.			68				30				
P.H.F.			0.850				0.682				
Percentage		31.9%	68.1%			50.3%	49.7%				
ADT/AADT		ADT 1,071		AADT 1,071							

Counts Unlimited, Inc
PO Box 1178
Corona, CA 92878
(951) 268-6268

City of Riverside
Dufferin Avenue
E/ Adams Street
24 Hour Directional Volume Count

RIV011
Site Code: 042-12071
Date Start: 16-Feb-12
Date End: 16-Feb-12

Start Time	16-Feb-12 Thu	Eastbound Morning	Eastbound Afternoon	Hour Totals Morning	Hour Totals Afternoon	Westbound Morning	Westbound Afternoon	Hour Totals Morning	Hour Totals Afternoon	Combined Totals Morning	Combined Totals Afternoon
12:00		3	10			0	8				
12:15		0	9			1	18				
12:30		2	18			0	17				
12:45		1	8	6	45	0	15	1	58	7	103
01:00		1	13			0	8				
01:15		0	15			0	12				
01:30		0	21			0	16				
01:45		1	21	2	70	1	10	1	46	3	116
02:00		0	28			0	10				
02:15		1	18			0	14				
02:30		2	23			1	13				
02:45		0	36	3	105	0	18	1	55	4	160
03:00		0	40			0	12				
03:15		1	29			0	10				
03:30		0	24			0	15				
03:45		0	32	1	125	2	20	2	57	3	182
04:00		0	28			0	18				
04:15		0	**41**			1	13				
04:30		0	**34**			3	16				
04:45		0	**30**	0	133	4	16	8	63	8	196
05:00		0	**36**			2	15				
05:15		1	33			5	**18**				
05:30		1	41			6	**24**				
05:45		3	27	5	137	8	**21**	21	78	26	215
06:00		1	39			13	**18**				
06:15		4	16			18	10				
06:30		5	15			19	9				
06:45		10	13	20	83	36	13	86	50	106	133
07:00		15	19			29	4				
07:15		5	8			**42**	9				
07:30		10	15			**51**	3				
07:45		**22**	6	52	48	**63**	1	185	17	237	65
08:00		**21**	13			**33**	4				
08:15		**18**	8			30	4				
08:30		**11**	10			23	1				
08:45		5	8	55	39	27	5	113	14	168	53
09:00		8	9			19	3				
09:15		14	7			34	0				
09:30		10	9			24	1				
09:45		17	7	49	32	13	2	90	6	139	38
10:00		10	8			13	1				
10:15		18	3			16	2				
10:30		16	2			16	1				
10:45		8	4	52	17	24	1	69	5	121	22
11:00		17	4			23	0				
11:15		13	2			11	3				
11:30		18	1			9	1				
11:45		14	5	62	12	12	1	55	5	117	17
Total		307	846	307	846	632	454	632	454	939	1300
Combined Total		1153		1153		1086		1086		2239	
AM Peak		07:45				07:15					
Vol.		72				189					
P.H.F.		0.818				0.750					
PM Peak			04:15				05:15				
Vol.			141				81				
P.H.F.			0.860				0.844				
Percentage		26.6%	73.4%			58.2%	41.8%				
ADT/AADT		ADT 2,239		AADT 2,239							

Counts Unlimited, Inc
PO Box 1178
Corona, CA 92878
(951) 268-6268

City of Riverside
Dufferin Avenue
E/ Van Buren Boulevard
24 Hour Directional Volume Count

RIV012
Site Code: 042-12071
Date Start: 16-Feb-12
Date End: 16-Feb-12

Start Time	16-Feb-12 Thu	Eastbound Morning	Eastbound Afternoon	Hour Totals Morning	Hour Totals Afternoon	Westbound Morning	Westbound Afternoon	Hour Totals Morning	Hour Totals Afternoon	Combined Totals Morning	Combined Totals Afternoon
12:00		0	3			0	6				
12:15		0	4			0	1				
12:30		0	4			0	10				
12:45		0	3	0	14	1	10	1	27	1	41
01:00		0	4			0	3				
01:15		0	4			0	9				
01:30		0	7			0	6				
01:45		0	3	0	18	0	7	0	25	0	43
02:00		0	7			0	9				
02:15		0	**11**			0	5				
02:30		0	**7**			0	12				
02:45		0	**12**	0	37	0	11	0	37	0	74
03:00		1	**15**			0	15				
03:15		0	5			1	6				
03:30		0	4			0	7				
03:45		0	10	1	34	0	12	1	40	2	74
04:00		1	6			0	16				
04:15		0	1			1	3				
04:30		0	5			4	10				
04:45		0	4	1	16	0	**12**	5	41	6	57
05:00		2	9			0	**10**				
05:15		1	12			1	**10**				
05:30		0	1			1	**14**				
05:45		3	2	6	24	2	10	4	44	10	68
06:00		7	6			3	5				
06:15		5	3			0	5				
06:30		7	0			3	10				
06:45		5	6	24	15	5	3	11	23	35	38
07:00		9	1			5	3				
07:15		**16**	4			2	3				
07:30		**29**	3			6	2				
07:45		**34**	0	88	8	5	2	18	10	106	18
08:00		**10**	2			**12**	1				
08:15		4	4			**9**	0				
08:30		5	2			**6**	4				
08:45		7	2	26	10	**16**	2	43	7	69	17
09:00		6	0			4	1				
09:15		4	1			5	2				
09:30		6	0			2	2				
09:45		5	1	21	2	8	1	19	6	40	8
10:00		6	0			4	1				
10:15		12	4			9	1				
10:30		1	1			5	1				
10:45		2	1	21	6	8	1	26	4	47	10
11:00		4	0			4	1				
11:15		12	0			2	1				
11:30		4	0			1	0				
11:45		2	0	22	0	12	0	19	2	41	2
Total		210	184	210	184	147	266	147	266	357	450
Combined Total		394		394		413		413		807	
AM Peak		07:15				08:00					
Vol.		89				43					
P.H.F.		0.654				0.672					
PM Peak			02:15				04:45				
Vol.			45				46				
P.H.F.			0.750				0.719				
Percentage		53.3%	46.7%			35.6%	64.4%				
ADT/AADT		ADT 807		AADT 807							

Counts Unlimited, Inc
PO Box 1178
Corona, CA 92878
(951) 268-6268

City of Riverside
Dufferin Avenue
E/ McAllister Street
24 Hour Directional Volume Count

RIV013
Site Code: 042-12071
Date Start: 16-Feb-12
Date End: 16-Feb-12

Start Time	16-Feb-12 Thu	Eastbound Morning	Eastbound Afternoon	Hour Totals Morning	Hour Totals Afternoon	Westbound Morning	Westbound Afternoon	Hour Totals Morning	Hour Totals Afternoon	Combined Totals Morning	Combined Totals Afternoon
12:00		0	6			1	5				
12:15		0	11			1	9				
12:30		1	6			0	8				
12:45		1	8	2	31	1	6	3	28	5	59
01:00		1	6			0	4				
01:15		2	4			0	7				
01:30		0	18			0	11				
01:45		0	11	3	39	0	8	0	30	3	69
02:00		0	8			0	6				
02:15		0	11			0	5				
02:30		1	15			0	7				
02:45		2	18	3	52	0	7	0	25	3	77
03:00		0	13			0	6				
03:15		1	13			1	9				
03:30		0	16			0	**15**				
03:45		1	19	2	61	0	**8**	1	38	3	99
04:00		0	19			0	**11**				
04:15		0	25			0	**14**				
04:30		0	29			1	7				
04:45		0	**26**	0	99	3	10	4	42	4	141
05:00		1	**24**			5	6				
05:15		4	**38**			9	7				
05:30		3	**36**			7	9				
05:45		3	25	11	123	5	8	26	30	37	153
06:00		4	25			13	8				
06:15		5	22			17	3				
06:30		7	21			10	3				
06:45		7	17	23	85	11	4	51	18	74	103
07:00		**20**	11			17	1				
07:15		**17**	7			15	1				
07:30		**15**	7			**24**	4				
07:45		**18**	8	70	33	**24**	3	80	9	150	42
08:00		15	7			**27**	1				
08:15		12	4			**16**	0				
08:30		13	1			13	2				
08:45		7	7	47	19	16	0	72	3	119	22
09:00		9	6			8	2				
09:15		10	4			8	1				
09:30		9	0			1	3				
09:45		9	5	37	15	12	2	29	8	66	23
10:00		5	6			9	1				
10:15		13	5			9	0				
10:30		6	3			4	1				
10:45		5	4	29	18	5	3	27	5	56	23
11:00		9	2			10	1				
11:15		13	0			9	1				
11:30		8	0			4	0				
11:45		14	0	44	2	4	0	27	2	71	4
Total		271	577	271	577	320	238	320	238	591	815
Combined Total		848		848		558		558		1406	
AM Peak		07:00				07:30					
Vol.		70				91					
P.H.F.		0.875				0.843					
PM Peak			04:45				03:30				
Vol.			124				48				
P.H.F.			0.816				0.800				
Percentage		32.0%	68.0%			57.3%	42.7%				
ADT/AADT		ADT 1,406		AADT 1,406							

Counts Unlimited, Inc
PO Box 1178
Corona, CA 92878
(951) 268-6268

City of Riverside
Bradley Street
W/ Washington Street
24 Hour Directional Volume Count

RIV014
Site Code: 042-12071
Date Start: 16-Feb-12
Date End: 16-Feb-12

Start Time	16-Feb-12 Thu	Eastbound Morning	Eastbound Afternoon	Hour Totals Morning	Hour Totals Afternoon	Westbound Morning	Westbound Afternoon	Hour Totals Morning	Hour Totals Afternoon	Combined Totals Morning	Combined Totals Afternoon
12:00		3	14			1	18				
12:15		1	12			1	23				
12:30		5	23			2	19				
12:45		2	17	11	66	0	24	4	84	15	150
01:00		1	14			0	15				
01:15		0	20			0	14				
01:30		2	71			0	22				
01:45		0	31	3	136	2	17	2	68	5	204
02:00		0	36			2	24				
02:15		2	30			0	20				
02:30		1	35			1	27				
02:45		1	39	4	140	1	22	4	93	8	233
03:00		1	48			0	29				
03:15		0	43			0	25				
03:30		1	55			1	26				
03:45		0	33	2	179	2	26	3	106	5	285
04:00		0	57			0	17				
04:15		0	57			1	24				
04:30		2	63			8	20				
04:45		0	**59**	2	236	7	23	16	84	18	320
05:00		0	**69**			8	20				
05:15		3	**62**			12	**30**				
05:30		2	**71**			18	**28**				
05:45		8	39	13	241	34	**28**	72	106	85	347
06:00		7	46			20	**27**				
06:15		10	46			49	12				
06:30		18	31			44	13				
06:45		27	24	62	147	63	19	176	71	238	218
07:00		10	25			**47**	14				
07:15		16	22			**65**	8				
07:30		16	19			**84**	5				
07:45		**19**	5	61	71	**84**	2	280	29	341	100
08:00		**32**	19			38	6				
08:15		**22**	24			56	8				
08:30		**18**	11			38	2				
08:45		13	14	85	68	44	7	176	23	261	91
09:00		10	17			35	5				
09:15		18	9			37	6				
09:30		18	16			30	7				
09:45		21	8	67	50	23	4	125	22	192	72
10:00		15	12			19	2				
10:15		19	10			19	4				
10:30		22	2			17	1				
10:45		12	10	68	34	26	0	81	7	149	41
11:00		12	2			21	1				
11:15		20	2			24	8				
11:30		33	1			11	1				
11:45		16	5	81	10	18	1	74	11	155	21
Total		459	1378	459	1378	1013	704	1013	704	1472	2082
Combined Total		1837		1837		1717		1717		3554	
AM Peak		07:45				07:00					
Vol.		91				280					
P.H.F.		0.689				0.833					
PM Peak			04:45				05:15				
Vol.			261				113				
P.H.F.			0.919				0.942				
Percentage		25.0%	75.0%			59.0%	41.0%				
ADT/AADT		ADT 3,554		AADT 3,554							

Counts Unlimited, Inc
PO Box 1178
Corona, CA 92878
(951) 268-6268

City of Riverside
Lincoln Avenue
E/ Madison Street
24 Hour Directional Volume Count

RIV015
Site Code: 042-12071
Date Start: 16-Feb-12
Date End: 16-Feb-12

Start Time	16-Feb-12 Thu	Eastbound Morning	Eastbound Afternoon	Hour Totals Morning	Hour Totals Afternoon	Westbound Morning	Westbound Afternoon	Hour Totals Morning	Hour Totals Afternoon	Combined Totals Morning	Combined Totals Afternoon
12:00		1	47			5	48				
12:15		4	54			4	59				
12:30		4	58			3	54				
12:45		4	44	13	203	2	42	14	203	27	406
01:00		0	46			1	41				
01:15		0	37			2	35				
01:30		2	44			1	46				
01:45		3	58	5	185	2	47	6	169	11	354
02:00		0	63			0	44				
02:15		4	61			1	59				
02:30		2	51			3	68				
02:45		2	49	8	224	1	96	5	267	13	491
03:00		1	80			2	53				
03:15		2	70			0	82				
03:30		0	**74**			1	72				
03:45		0	**72**	3	296	2	72	5	279	8	575
04:00		1	**92**			4	67				
04:15		2	**91**			5	73				
04:30		0	69			10	62				
04:45		3	70	6	322	10	62	29	264	35	586
05:00		6	68			14	**71**				
05:15		4	66			18	**73**				
05:30		10	82			24	**79**				
05:45		15	66	35	282	38	**81**	94	304	129	586
06:00		11	72			28	56				
06:15		14	51			31	45				
06:30		21	48			29	62				
06:45		34	46	80	217	53	44	141	207	221	424
07:00		47	45			41	32				
07:15		**61**	39			**66**	33				
07:30		**70**	33			**101**	31				
07:45		**89**	23	267	140	**85**	15	293	111	560	251
08:00		**67**	37			**76**	19				
08:15		36	23			59	26				
08:30		47	21			39	22				
08:45		53	17	203	98	47	17	221	84	424	182
09:00		41	27			44	16				
09:15		28	19			28	13				
09:30		37	13			42	16				
09:45		39	13	145	72	39	5	153	50	298	122
10:00		23	21			39	10				
10:15		31	10			38	8				
10:30		45	11			40	13				
10:45		29	6	128	48	51	9	168	40	296	88
11:00		54	11			55	3				
11:15		51	11			37	8				
11:30		58	9			40	3				
11:45		38	6	201	37	61	3	193	17	394	54
Total		1094	2124	1094	2124	1322	1995	1322	1995	2416	4119
Combined Total		3218		3218		3317		3317		6535	
AM Peak		07:15				07:15					
Vol.		287				328					
P.H.F.		0.806				0.812					
PM Peak			03:30				05:00				
Vol.			329				304				
P.H.F.			0.894				0.792				
Percentage		34.0%	66.0%			39.9%	60.1%				
ADT/AADT		ADT 6,535		AADT 6,535							

APPENDIX B-2: EXISTING INTERSECTION PEAK HOUR AND ADT COUNTS GATES OPEN

Counts Unlimited Inc.
PO Box 1178
Corona, CA 92878
(951) 268-6268

City of Riverside
N/S: Madison Street
E/W: SR-91 Westbound Ramps
Weather: Sunny

File Name : RIVMA91WAM
Site Code : 11028661
Start Date : 2/8/2011
Page No : 1

Groups Printed- Total Volume

	Madison Street Southbound				SR-91 Westbound Off Ramp Westbound				Madison Street Northbound				SR-91 Westbound On Ramp Eastbound				
Start Time	Left	Thru	Right	App. Total	Left	Thru	Right	App. Total	Left	Thru	Right	App. Total	Left	Thru	Right	App. Total	Int. Total
07:00 AM	0	105	52	157	61	0	29	90	54	104	3	161	0	0	0	0	408
07:15 AM	0	88	54	142	62	0	28	90	90	116	0	206	0	0	0	0	438
07:30 AM	0	107	68	175	60	2	55	117	93	144	0	237	0	0	0	0	529
07:45 AM	0	144	64	208	88	0	62	150	102	174	0	276	0	0	0	0	634
Total	0	444	238	682	271	2	174	447	339	538	3	880	0	0	0	0	2009
08:00 AM	0	119	60	179	76	2	48	126	90	188	0	278	0	0	0	0	583
08:15 AM	0	106	57	163	60	1	58	119	66	137	0	203	0	0	0	0	485
08:30 AM	0	96	56	152	58	0	59	117	75	135	0	210	0	0	0	0	479
08:45 AM	0	114	48	162	62	2	40	104	61	134	0	195	0	0	0	0	461
Total	0	435	221	656	256	5	205	466	292	594	0	886	0	0	0	0	2008
Grand Total	0	879	459	1338	527	7	379	913	631	1132	3	1766	0	0	0	0	4017
Apprch %	0	65.7	34.3		57.7	0.8	41.5		35.7	64.1	0.2		0	0	0		
Total %	0	21.9	11.4	33.3	13.1	0.2	9.4	22.7	15.7	28.2	0.1	44	0	0	0	0	

	Madison Street Southbound				SR-91 Westbound Off Ramp Westbound				Madison Street Northbound				SR-91 Westbound On Ramp Eastbound				
Start Time	Left	Thru	Right	App. Total	Left	Thru	Right	App. Total	Left	Thru	Right	App. Total	Left	Thru	Right	App. Total	Int. Total
Peak Hour Analysis From 07:00 AM to 08:45 AM - Peak 1 of 1																	
Peak Hour for Entire Intersection Begins at 07:30 AM																	
07:30 AM	0	107	**68**	175	60	**2**	55	117	93	144	0	237	0	0	0	0	529
07:45 AM	0	**144**	64	**208**	**88**	0	**62**	**150**	**102**	174	0	276	0	0	0	0	**634**
08:00 AM	0	119	60	179	76	2	48	126	90	**188**	0	**278**	0	0	0	0	583
08:15 AM	0	106	57	163	60	1	58	119	66	137	0	203	0	0	0	0	485
Total Volume	0	476	249	725	284	5	223	512	351	643	0	994	0	0	0	0	2231
% App. Total	0	65.7	34.3		55.5	1	43.6		35.3	64.7	0		0	0	0		
PHF	.000	.826	.915	.871	.807	.625	.899	.853	.860	.855	.000	.894	.000	.000	.000	.000	.880

Counts Unlimited Inc.
PO Box 1178
Corona, CA 92878
(951) 268-6268

City of Riverside
N/S: Madison Street
E/W: SR-91 Westbound Ramps
Weather: Sunny

File Name : RIVMA91WAM
Site Code : 11028661
Start Date : 2/8/2011
Page No : 2

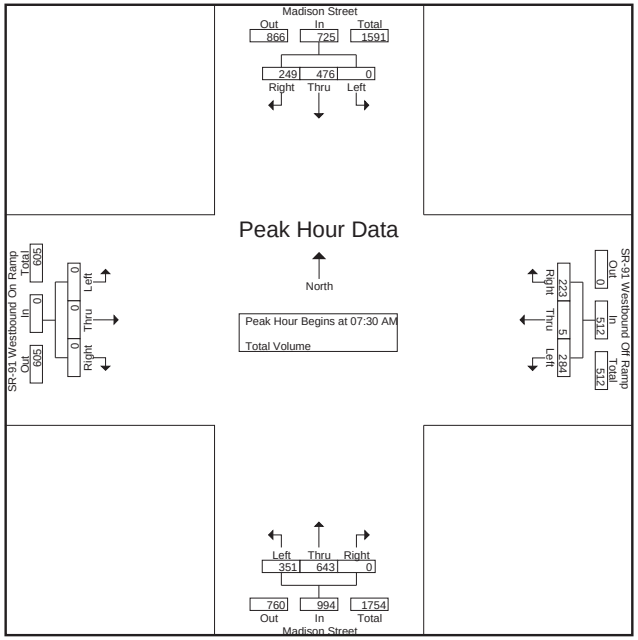

Peak Hour Analysis From 07:00 AM to 08:45 AM - Peak 1 of 1
Peak Hour for Each Approach Begins at:

	07:30 AM				07:30 AM				07:15 AM				07:00 AM			
+0 mins.	0	107	**68**	175	60	**2**	55	117	90	116	0	206	0	0	0	0
+15 mins.	0	**144**	64	**208**	**88**	0	**62**	**150**	93	144	0	237	0	0	0	0
+30 mins.	0	119	60	179	76	2	48	126	**102**	174	0	276	0	0	0	0
+45 mins.	0	106	57	163	60	1	58	119	90	**188**	0	**278**	0	0	0	0
Total Volume	0	476	249	725	284	5	223	512	375	622	0	997	0	0	0	0
% App. Total	0	65.7	34.3		55.5	1	43.6		37.6	62.4	0		0	0	0	
PHF	.000	.826	.915	.871	.807	.625	.899	.853	.919	.827	.000	.897	.000	.000	.000	.000

Counts Unlimited Inc.
PO Box 1178
Corona, CA 92878
(951) 268-6268

City of Riverside
N/S: Madison Street
E/W: SR-91 Westbound Ramps
Weather: Sunny

File Name : RIVMA91WPM
Site Code : 11028661
Start Date : 2/8/2011
Page No : 1

Groups Printed- Total Volume

	Madison Street Southbound				SR-91 Westbound Off Ramp Westbound				Madison Street Northbound				SR-91 Westbound On Ramp Eastbound				
Start Time	Left	Thru	Right	App. Total	Left	Thru	Right	App. Total	Left	Thru	Right	App. Total	Left	Thru	Right	App. Total	Int. Total
04:00 PM	0	163	60	223	67	1	47	115	78	151	0	229	0	0	0	0	567
04:15 PM	0	126	60	186	62	0	41	103	87	150	0	237	0	0	0	0	526
04:30 PM	0	164	65	229	42	0	43	85	69	149	0	218	0	0	0	0	532
04:45 PM	0	146	62	208	58	0	48	106	74	140	0	214	0	0	0	0	528
Total	0	599	247	846	229	1	179	409	308	590	0	898	0	0	0	0	2153
05:00 PM	0	162	84	246	54	1	52	107	81	149	0	230	0	0	0	0	583
05:15 PM	0	136	71	207	41	0	39	80	90	169	0	259	0	0	0	0	546
05:30 PM	0	176	70	246	50	1	41	92	86	157	0	243	0	0	0	0	581
05:45 PM	0	137	66	203	45	1	63	109	66	149	0	215	0	0	0	0	527
Total	0	611	291	902	190	3	195	388	323	624	0	947	0	0	0	0	2237
Grand Total	0	1210	538	1748	419	4	374	797	631	1214	0	1845	0	0	0	0	4390
Apprch %	0	69.2	30.8		52.6	0.5	46.9		34.2	65.8	0		0	0	0		
Total %	0	27.6	12.3	39.8	9.5	0.1	8.5	18.2	14.4	27.7	0	42	0	0	0	0	

	Madison Street Southbound				SR-91 Westbound Off Ramp Westbound				Madison Street Northbound				SR-91 Westbound On Ramp Eastbound				
Start Time	Left	Thru	Right	App. Total	Left	Thru	Right	App. Total	Left	Thru	Right	App. Total	Left	Thru	Right	App. Total	Int. Total
Peak Hour Analysis From 04:00 PM to 05:45 PM - Peak 1 of 1																	
Peak Hour for Entire Intersection Begins at 04:45 PM																	
04:45 PM	0	146	62	208	**58**	0	48	106	74	140	0	214	0	0	0	0	528
05:00 PM	0	162	**84**	**246**	54	**1**	**52**	**107**	81	149	0	230	0	0	0	0	**583**
05:15 PM	0	136	71	207	41	0	39	80	**90**	**169**	0	**259**	0	0	0	0	546
05:30 PM	0	**176**	70	246	50	1	41	92	86	157	0	243	0	0	0	0	581
Total Volume	0	620	287	907	203	2	180	385	331	615	0	946	0	0	0	0	2238
% App. Total	0	68.4	31.6		52.7	0.5	46.8		35	65	0		0	0	0		
PHF	.000	.881	.854	.922	.875	.500	.865	.900	.919	.910	.000	.913	.000	.000	.000	.000	.960

Counts Unlimited Inc.
PO Box 1178
Corona, CA 92878
(951) 268-6268

City of Riverside
N/S: Madison Street
E/W: SR-91 Westbound Ramps
Weather: Sunny

File Name : RIVMA91WPM
Site Code : 11028661
Start Date : 2/8/2011
Page No : 2

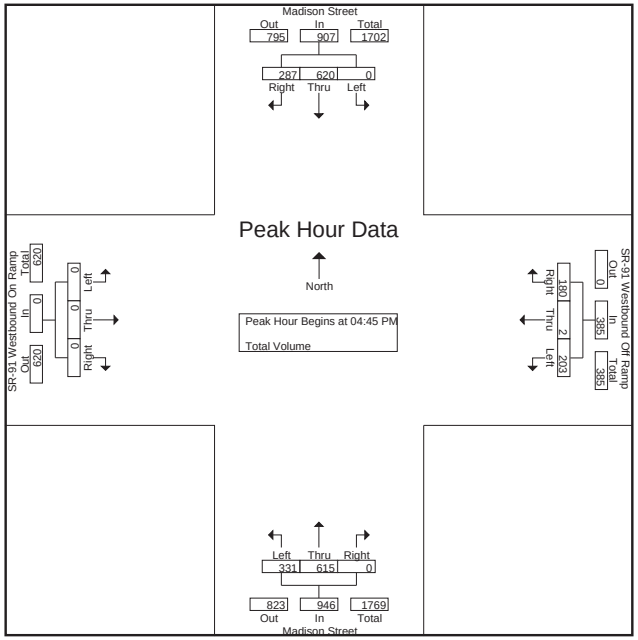

Peak Hour Analysis From 04:00 PM to 05:45 PM - Peak 1 of 1

Pea□Hou□ o□□a□□App□oa□□□e□□□at:

	04:45 PM				04:00 PM				05:00 PM				04:00 PM			
□0 m□□□	0	146	62	208	**67**	**1**	47	**115**	81	149	0	230	0	0	0	0
□15 m□□□	0	162	**84**	**246**	62	0	41	103	**90**	**169**	0	**259**	0	0	0	0
□30 m□□□	0	136	71	207	42	0	43	85	86	157	0	243	0	0	0	0
□45 m□□□	0	**176**	70	246	58	0	**48**	106	66	149	0	215	0	0	0	0
Total Volume	0	620	287	907	229	1	179	409	323	624	0	947	0	0	0	0
% App. Total	0	68.4	31.6		56	0.2	43.8		34.1	65.9	0		0	0	0	
PHF	.000	.881	.854	.922	.854	.250	.932	.889	.897	.923	.000	.914	.000	.000	.000	.000

Counts Unlimited Inc.
PO Box 1178
Corona, CA 92878
(951) 268-6268

City of Riverside
N/S: Madison Street
E/W: SR-91 Eastbound Ramps
Weather: Sunny

File Name : RIVMA91EAM
Site Code : 11028051
Start Date : 2/8/2011
Page No : 1

Groups Printed- Total Volume

	Madison Street Southbound				SR-91 Eastbound On Ramp Westbound				Madison Street Northbound				SR-91 Eastbound Off Ramp Eastbound				
Start Time	Left	Thru	Right	App. Total	Left	Thru	Right	App. Total	Left	Thru	Right	App. Total	Left	Thru	Right	App. Total	Int. Total
07:00 AM	57	105	0	162	0	0	0	0	0	127	72	199	38	1	41	80	441
07:15 AM	64	99	0	163	0	0	0	0	0	155	70	225	39	4	58	101	489
07:30 AM	58	96	0	154	0	0	0	0	0	219	85	304	40	2	58	100	558
07:45 AM	56	179	0	235	0	0	0	0	0	208	55	263	61	6	58	125	623
Total	235	479	0	714	0	0	0	0	0	709	282	991	178	13	215	406	2111
08:00 AM	43	148	0	191	0	0	0	0	0	216	63	279	66	5	77	148	618
08:15 AM	45	124	0	169	0	0	0	0	0	133	48	181	58	0	83	141	491
08:30 AM	48	117	0	165	0	0	0	0	0	151	50	201	56	0	38	94	460
08:45 AM	37	132	0	169	0	0	0	0	0	131	54	185	64	1	50	115	469
Total	173	521	0	694	0	0	0	0	0	631	215	846	422	19	463	904	2038
Grand Total	408	1000	0	1408	0	0	0	0	0	1340	497	1837	422	19	463	904	4149
Apprch %	29	71	0		0	0	0		0	72.9	27.1		46.7	2.1	51.2		
Total %	9.8	24.1	0	33.9	0	0	0	0	0	32.3	12	44.3	10.2	0.5	11.2	21.8	

	Madison Street Southbound				SR-91 Eastbound On Ramp Westbound				Madison Street Northbound				SR-91 Eastbound Off Ramp Eastbound				
Start Time	Left	Thru	Right	App. Total	Left	Thru	Right	App. Total	Left	Thru	Right	App. Total	Left	Thru	Right	App. Total	Int. Total
Peak Hour Analysis From 07:00 AM to 08:45 AM - Peak 1 of 1																	
Peak Hour for Entire Intersection Begins at 07:30 AM																	
07:30 AM	**58**	96	0	154	0	0	0	0	0	**219**	**85**	**304**	40	2	58	100	558
07:45 AM	56	**179**	0	**235**	0	0	0	0	0	208	55	263	61	**6**	58	125	**623**
08:00 AM	43	148	0	191	0	0	0	0	0	216	63	279	**66**	5	77	**148**	618
08:15 AM	45	124	0	169	0	0	0	0	0	133	48	181	58	0	**83**	141	491
Total Volume	202	547	0	749	0	0	0	0	0	776	251	1027	225	13	276	514	2290
% App. Total	27	73	0		0	0	0		0	75.6	24.4		43.8	2.5	53.7		
PHF	.871	.764	.000	.797	.000	.000	.000	.000	.000	.886	.738	.845	.852	.542	.831	.868	.919

Counts Unlimited Inc.
PO Box 1178
Corona, CA 92878
(951) 268-6268

City of Riverside
N/S: Madison Street
E/W: SR-91 Eastbound Ramps
Weather: Sunny

File Name : RIVMA91EAM
Site Code : 11028051
Start Date : 2/8/2011
Page No : 2

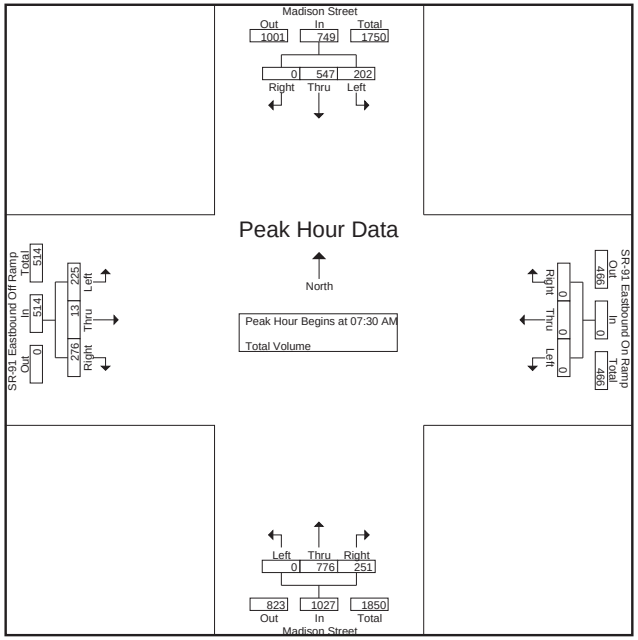

Peak Hour Analysis From 07:00 AM to 08:45 AM - Peak 1 of 1
Peak Hour for Each Approach Begins at:

	07:45 AM				07:00 AM				07:15 AM				07:30 AM			
+0 mins.	**56**	**179**	0	**235**	0	0	0	0	0	155	70	225	40	2	58	100
+15 mins.	43	148	0	191	0	0	0	0	0	**219**	**85**	**304**	61	**6**	58	125
+30 mins.	45	124	0	169	0	0	0	0	0	208	55	263	**66**	5	77	**148**
+45 mins.	48	117	0	165	0	0	0	0	0	216	63	279	58	0	**83**	141
Total Volume	192	568	0	760	0	0	0	0	0	798	273	1071	225	13	276	514
% App. Total	25.3	74.7	0		0	0	0		0	74.5	25.5		43.8	2.5	53.7	
PHF	.857	.793	.000	.809	.000	.000	.000	.000	.000	.911	.803	.881	.852	.542	.831	.868

Counts Unlimited Inc.
PO Box 1178
Corona, CA 92878
(951) 268-6268

City of Riverside
N/S: Madison Street
E/W: SR-91 Eastbound Ramps
Weather: Sunny

File Name : RIVMA91EPM
Site Code : 11028051
Start Date : 2/8/2011
Page No : 1

□oup□P□□te□□Total Volume

	Ma□□o□ □t□eet □out□□ou□□				□□91 □a□□ou□□□□□amp □ e□□ou□□				Ma□□o□ □t□eet □o□□□ou□□				□□91 □a□□ou□□ □□□amp □a□□ou□□				
□ta□□ Time	□e□□	T□□u	□□□□t	App. Total	□e□□	T□□u	□□□□t	App. Total	□e□□	T□□u	□□□□t	App. Total	□e□□	T□□u	□□□□t	App. Total	□□□□total
04:00 PM	45	168	0	213	0	0	0	0	0	188	97	285	48	0	55	103	601
04:15 PM	60	157	0	217	0	0	0	0	0	169	53	222	58	0	62	120	559
04:30 PM	46	141	0	187	0	0	0	0	0	178	85	263	53	1	67	121	571
04:45 PM	49	183	0	232	0	0	0	0	0	144	81	225	60	0	54	114	571
Total	200	649	0	849	0	0	0	0	0	679	316	995	219	1	238	458	2302
05:00 PM	43	169	0	212	0	0	0	0	0	186	91	277	44	2	55	101	590
05:15 PM	57	141	0	198	0	0	0	0	0	190	76	266	60	1	73	134	598
05:30 PM	63	156	0	219	0	0	0	0	0	200	67	267	54	1	59	114	600
05:45 PM	60	134	0	194	0	0	0	0	0	149	80	229	58	0	42	100	523
Total	223	600	0	823	0	0	0	0	0	725	314	1039	216	4	229	449	2311
□a□□Total	423	1249	0	1672	0	0	0	0	0	1404	630	2034	435	5	467	907	4613
App□□%	25.3	74.7	0		0	0	0		0	69	31		48	0.6	51.5		
Total %	9.2	27.1	0	36.2	0	0	0	0	0	30.4	13.7	44.1	9.4	0.1	10.1	19.7	

	Ma□□o□ □t□eet □out□□ou□□				□□91 □a□□ou□□□□□amp □ e□□ou□□				Ma□□o□ □t□eet □o□□□ou□□				□□91 □a□□ou□□ □□□amp □a□□ou□□				
□ta□□ Time	□e□□	T□□u	□□□□t	App. Total	□e□□	T□□u	□□□□t	App. Total	□e□□	T□□u	□□□□t	App. Total	□e□□	T□□u	□□□□t	App. Total	□□□□total
Pea□Hou□A□al □□□□F□om 04:00 PM to 05:45 PM □Pea□1 o□1																	
Pea□Hou□o□□□t□e □te□e□t o□□e□□□at 04:45 PM																	
04:45 PM	49	**183**	0	**232**	0	0	0	0	0	144	81	225	**60**	0	54	114	571
05:00 PM	43	169	0	212	0	0	0	0	0	186	**91**	**277**	44	**2**	55	101	590
05:15 PM	57	141	0	198	0	0	0	0	0	190	76	266	60	1	**73**	**134**	598
05:30 PM	**63**	156	0	219	0	0	0	0	0	**200**	67	267	54	1	59	114	**600**
Total Volume	212	649	0	861	0	0	0	0	0	720	315	1035	218	4	241	463	2359
% App. Total	24.6	75.4	0		0	0	0		0	69.6	30.4		47.1	0.9	52.1		
PHF	.841	.887	.000	.928	.000	.000	.000	.000	.000	.900	.865	.934	.908	.500	.825	.864	.983

Counts Unlimited Inc.
PO Box 1178
Corona, CA 92878
(951) 268-6268

City of Riverside
N/S: Madison Street
E/W: SR-91 Eastbound Ramps
Weather: Sunny

File Name : RIVMA91EPM
Site Code : 11028051
Start Date : 2/8/2011
Page No : 2

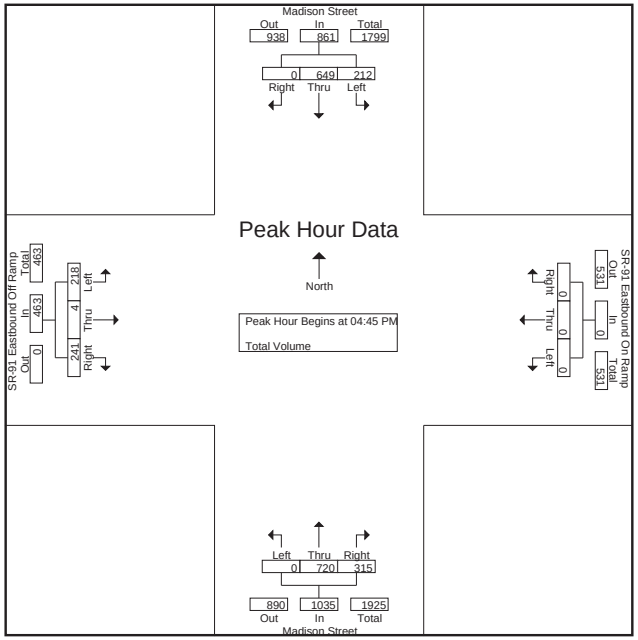

Peak Hour Analysis From 04:00 PM to 05:45 PM - Peak 1 of 1

Pea□Hou□ o□□a□□App□oa□□□e□□□at:

	04:45 PM				04:00 PM				05:00 PM				04:30 PM			
□0 m□□□	49	**183**	0	**232**	0	0	0	0	0	186	**91**	**277**	53	1	67	121
□15 m□□□	43	169	0	212	0	0	0	0	0	190	76	266	**60**	0	54	114
□30 m□□□	57	141	0	198	0	0	0	0	0	**200**	67	267	44	**2**	55	101
□45 m□□□	**63**	156	0	219	0	0	0	0	0	149	80	229	60	1	**73**	**134**
Total Volume	212	649	0	861	0	0	0	0	0	725	314	1039	217	4	249	470
% App. Total	24.6	75.4	0		0	0	0		0	69.8	30.2		46.2	0.9	53	
PHF	.841	.887	.000	.928	.000	.000	.000	.000	.000	.906	.863	.938	.904	.500	.853	.877

Counts Unlimited Inc.
PO Box 1178
Corona, CA 92878
(951) 268-6268

City of Riverside
N/S: Madison Street
E/W: Indiana Avenue
Weather: Sunny

File Name : RIVMAINAM
Site Code : 11028063
Start Date : 2/8/2011
Page No : 1

Groups Printed- Total Volume

	Madison Street Southbound				Indiana Avenue Westbound				Madison Street Northbound				Indiana Avenue Eastbound				
Start Time	Left	Thru	Right	App. Total	Left	Thru	Right	App. Total	Left	Thru	Right	App. Total	Left	Thru	Right	App. Total	Int. Total
07:00 AM	54	63	24	141	4	28	64	96	0	104	6	110	28	44	1	73	420
07:15 AM	65	62	26	153	3	28	101	132	5	100	7	112	22	80	7	109	506
07:30 AM	73	55	19	147	4	48	104	156	2	139	8	149	43	139	7	189	641
07:45 AM	86	90	55	231	4	41	104	149	13	109	3	125	48	126	7	181	686
Total	278	270	124	672	15	145	373	533	20	452	24	496	141	389	22	552	2253
08:00 AM	88	87	37	212	2	41	94	137	17	133	8	158	40	118	6	164	671
08:15 AM	94	74	28	196	7	35	60	102	7	81	6	94	28	71	4	103	495
08:30 AM	47	51	17	115	1	30	67	98	17	81	4	102	14	56	8	78	393
08:45 AM	65	65	24	154	4	27	59	90	11	75	3	89	22	43	8	73	406
Total	294	277	106	677	14	133	280	427	52	370	21	443	104	288	26	418	1965
Grand Total	572	547	230	1349	29	278	653	960	72	822	45	939	245	677	48	970	4218
Apprch %	42.4	40.5	17		3	29	68		7.7	87.5	4.8		25.3	69.8	4.9		
Total %	13.6	13	5.5	32	0.7	6.6	15.5	22.8	1.7	19.5	1.1	22.3	5.8	16.1	1.1	23	

	Madison Street Southbound				Indiana Avenue Westbound				Madison Street Northbound				Indiana Avenue Eastbound				
Start Time	Left	Thru	Right	App. Total	Left	Thru	Right	App. Total	Left	Thru	Right	App. Total	Left	Thru	Right	App. Total	Int. Total
Peak Hour Analysis From 07:00 AM to 08:45 AM - Peak 1 of 1																	
Peak Hour for Entire Intersection Begins at 07:15 AM																	
07:15 AM	65	62	26	153	3	28	101	132	5	100	7	112	22	80	**7**	109	506
07:30 AM	73	55	19	147	**4**	**48**	**104**	**156**	2	**139**	**8**	149	43	**139**	7	**189**	641
07:45 AM	86	**90**	**55**	**231**	4	41	104	149	13	109	3	125	**48**	126	7	181	**686**
08:00 AM	**88**	87	37	212	2	41	94	137	**17**	133	8	**158**	40	118	6	164	671
Total Volume	312	294	137	743	13	158	403	574	37	481	26	544	153	463	27	643	2504
% App. Total	42	39.6	18.4		2.3	27.5	70.2		6.8	88.4	4.8		23.8	72	4.2		
PHF	.886	.817	.623	.804	.813	.823	.969	.920	.544	.865	.813	.861	.797	.833	.964	.851	.913

Counts Unlimited Inc.
PO Box 1178
Corona, CA 92878
(951) 268-6268

City of Riverside
N/S: Madison Street
E/W: Indiana Avenue
Weather: Sunny

File Name : RIVMAINAM
Site Code : 11028063
Start Date : 2/8/2011
Page No : 2

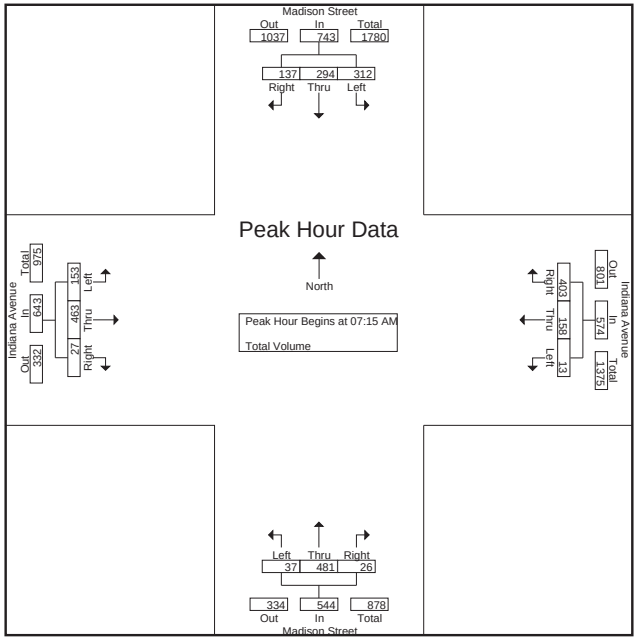

Peak Hour Analysis From 07:00 AM to 08:45 AM - Peak 1 of 1
Peak Hour for Each Approach Begins at:

	07:30 AM				07:15 AM				07:15 AM				07:15 AM			
+0 mins.	73	55	19	147	3	28	101	132	5	100	7	112	22	80	**7**	109
+15 mins.	86	**90**	**55**	**231**	**4**	**48**	**104**	**156**	2	**139**	**8**	149	43	**139**	7	**189**
+30 mins.	88	87	37	212	4	41	104	149	13	109	3	125	**48**	126	7	181
+45 mins.	**94**	74	28	196	2	41	94	137	**17**	133	8	**158**	40	118	6	164
Total Volume	341	306	139	786	13	158	403	574	37	481	26	544	153	463	27	643
% App. Total	43.4	38.9	17.7		2.3	27.5	70.2		6.8	88.4	4.8		23.8	72	4.2	
PHF	.907	.850	.632	.851	.813	.823	.969	.920	.544	.865	.813	.861	.797	.833	.964	.851

Counts Unlimited Inc.
PO Box 1178
Corona, CA 92878
(951) 268-6268

City of Riverside
N/S:Madison Street
E/W: Indiana Avenue
Weather: Sunny

File Name : RIVMAINPM
Site Code : 11028063
Start Date : 2/8/2011
Page No : 1

□□oup□P□□te□□Total Volume

	Ma□□o□□□treet □out□□ou□□				□□a□a A□e□ue □ e□t□ou□□				Ma□□o□□□treet □o□t□ou□□				□□a□a A□e□ue □a□t□ou□□				
□ta□t Time	□e□t	T□□u	□□□□t	App. Total	□e□t	T□□u	□□□□t	App. Total	□e□t	T□□u	□□□□t	App. Total	□e□t	T□□u	□□□□t	App. Total	□□□total
04:00 PM	61	120	24	205	10	60	102	172	10	110	13	133	57	89	11	157	667
04:15 PM	63	126	25	214	6	61	83	150	11	102	14	127	36	88	8	132	623
04:30 PM	65	98	28	191	11	70	93	174	16	114	7	137	48	74	17	139	641
04:45 PM	62	146	27	235	18	54	85	157	7	107	6	120	45	77	10	132	644
Total	251	490	104	845	45	245	363	653	44	433	40	517	186	328	46	560	2575
05:00 PM	61	132	21	214	11	77	99	187	18	109	7	134	65	104	14	183	718
05:15 PM	59	124	27	210	3	66	114	183	17	109	9	135	55	99	19	173	701
05:30 PM	63	116	19	198	8	58	93	159	9	118	8	135	46	93	20	159	651
05:45 PM	55	96	26	177	6	40	101	147	10	84	3	97	47	68	11	126	547
Total	238	468	93	799	28	241	407	676	54	420	27	501	213	364	64	641	2617
□a□□Total	489	958	197	1644	73	486	770	1329	98	853	67	1018	399	692	110	1201	5192
App□□%	29.7	58.3	12		5.5	36.6	57.9		9.6	83.8	6.6		33.2	57.6	9.2		
Total %	9.4	18.5	3.8	31.7	1.4	9.4	14.8	25.6	1.9	16.4	1.3	19.6	7.7	13.3	2.1	23.1	

	Ma□□o□□□treet □out□□ou□□				□□a□a A□e□ue □ e□t□ou□□				Ma□□o□□□treet □o□t□ou□□				□□a□a A□e□ue □a□t□ou□□				
□ta□t Time	□e□t	T□□u	□□□□t	App. Total	□e□t	T□□u	□□□□t	App. Total	□e□t	T□□u	□□□□t	App. Total	□e□t	T□□u	□□□□t	App. Total	□□□total
Pea□Hou□A□al □□□□F□om 04:00 PM to 05:45 PM □Pea□1 o□1																	
Pea□Hou□o□□□t□e □□te□□e□t o□□□e□□□at 04:45 PM																	
04:45 PM	62	**146**	**27**	**235**	**18**	54	85	157	7	107	6	120	45	77	10	132	644
05:00 PM	61	132	21	214	11	**77**	99	**187**	**18**	109	7	134	**65**	**104**	14	**183**	**718**
05:15 PM	59	124	27	210	3	66	**114**	183	17	109	**9**	**135**	55	99	19	173	701
05:30 PM	**63**	116	19	198	8	58	93	159	9	**118**	8	135	46	93	**20**	159	651
Total Volume	245	518	94	857	40	255	391	686	51	443	30	524	211	373	63	647	2714
% App. Total	28.6	60.4	11		5.8	37.2	57		9.7	84.5	5.7		32.6	57.7	9.7		
PHF	.972	.887	.870	.912	.556	.828	.857	.917	.708	.939	.833	.970	.812	.897	.788	.884	.945

Counts Unlimited Inc.
PO Box 1178
Corona, CA 92878
(951) 268-6268

City of Riverside
N/S:Madison Street
E/W: Indiana Avenue
Weather: Sunny

File Name : RIVMAINPM
Site Code : 11028063
Start Date : 2/8/2011
Page No : 2

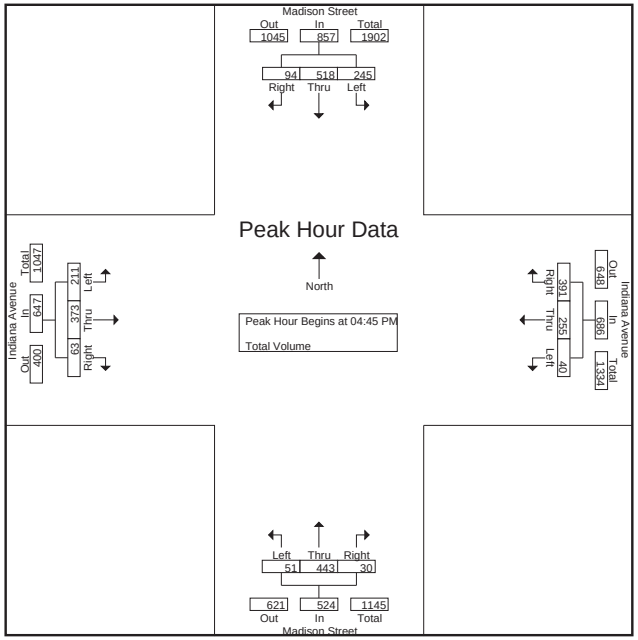

Peak Hour Analysis From 04:00 PM to 05:45 PM - Peak 1 of 1

Pea□Hou□ o□□a□□App□oa□□□e□□□at:

	04:45 PM				04:30 PM				04:30 PM				04:45 PM			
□0 m□□	62	**146**	**27**	**235**	11	70	93	174	16	**114**	7	**137**	45	77	10	132
□15 m□□	61	132	21	214	**18**	54	85	157	7	107	6	120	**65**	**104**	14	**183**
□30 m□□	59	124	27	210	11	**77**	99	**187**	**18**	109	7	134	55	99	19	173
□45 m□□	**63**	116	19	198	3	66	**114**	183	17	109	**9**	135	46	93	**20**	159
Total Volume	245	518	94	857	43	267	391	701	58	439	29	526	211	373	63	647
% App. Total	28.6	60.4	11		6.1	38.1	55.8		11	83.5	5.5		32.6	57.7	9.7	
PHF	.972	.887	.870	.912	.597	.867	.857	.937	.806	.963	.806	.960	.812	.897	.788	.884

Counts Unlimited Inc.
PO Box 1178
Corona, CA 92878
(951) 268-6268

City of Riverside
N/S: Madison Street
E/W: Lincoln Avenue
Weather: Sunny

File Name : RIVMALIAM
Site Code : 11028155
Start Date : 2/8/2011
Page No : 1

Groups Printed- Total Volume

	Madison Street Southbound				Lincoln Street Westbound				Madison Street Northbound				Lincoln Street Eastbound				
Start Time	Left	Thru	Right	App. Total	Left	Thru	Right	App. Total	Left	Thru	Right	App. Total	Left	Thru	Right	App. Total	Int. Total
07:00 AM	9	27	10	46	2	26	15	43	2	33	3	38	25	41	3	69	196
07:15 AM	17	24	20	61	4	38	25	67	5	54	0	59	24	44	4	72	259
07:30 AM	15	21	19	55	0	52	34	86	6	62	4	72	18	41	2	61	274
07:45 AM	7	25	20	52	1	47	20	68	5	64	0	69	30	75	0	105	294
Total	48	97	69	214	7	163	94	264	18	213	7	238	97	201	9	307	1023
08:00 AM	12	21	23	56	2	45	27	74	6	54	1	61	26	58	6	90	281
08:15 AM	12	26	10	48	0	25	23	48	3	35	0	38	15	29	3	47	181
08:30 AM	13	27	8	48	1	22	19	42	1	33	0	34	21	24	4	49	173
08:45 AM	8	29	15	52	0	40	12	52	1	39	0	40	16	28	1	45	189
Total	45	103	56	204	3	132	81	216	11	161	1	173	78	139	14	231	824
Grand Total	93	200	125	418	10	295	175	480	29	374	8	411	175	340	23	538	1847
Apprch %	22.2	47.8	29.9		2.1	61.5	36.5		7.1	91	1.9		32.5	63.2	4.3		
Total %	5	10.8	6.8	22.6	0.5	16	9.5	26	1.6	20.2	0.4	22.3	9.5	18.4	1.2	29.1	

	Madison Street Southbound				Lincoln Street Westbound				Madison Street Northbound				Lincoln Street Eastbound				
Start Time	Left	Thru	Right	App. Total	Left	Thru	Right	App. Total	Left	Thru	Right	App. Total	Left	Thru	Right	App. Total	Int. Total
Peak Hour Analysis From 07:00 AM to 08:45 AM - Peak 1 of 1																	
Peak Hour for Entire Intersection Begins at 07:15 AM																	
07:15 AM	**17**	24	20	**61**	**4**	38	25	67	5	54	0	59	24	44	4	72	259
07:30 AM	15	21	19	55	0	**52**	**34**	**86**	**6**	62	**4**	**72**	18	41	2	61	274
07:45 AM	7	**25**	20	52	1	47	20	68	5	**64**	0	69	**30**	**75**	0	**105**	**294**
08:00 AM	12	21	**23**	56	2	45	27	74	6	54	1	61	26	58	**6**	90	281
Total Volume	51	91	82	224	7	182	106	295	22	234	5	261	98	218	12	328	1108
% App. Total	22.8	40.6	36.6		2.4	61.7	35.9		8.4	89.7	1.9		29.9	66.5	3.7		
PHF	.750	.910	.891	.918	.438	.875	.779	.858	.917	.914	.313	.906	.817	.727	.500	.781	.942

Counts Unlimited Inc.
PO Box 1178
Corona, CA 92878
(951) 268-6268

City of Riverside
N/S: Madison Street
E/W: Lincoln Avenue
Weather: Sunny

File Name : RIVMALIAM
Site Code : 11028155
Start Date : 2/8/2011
Page No : 2

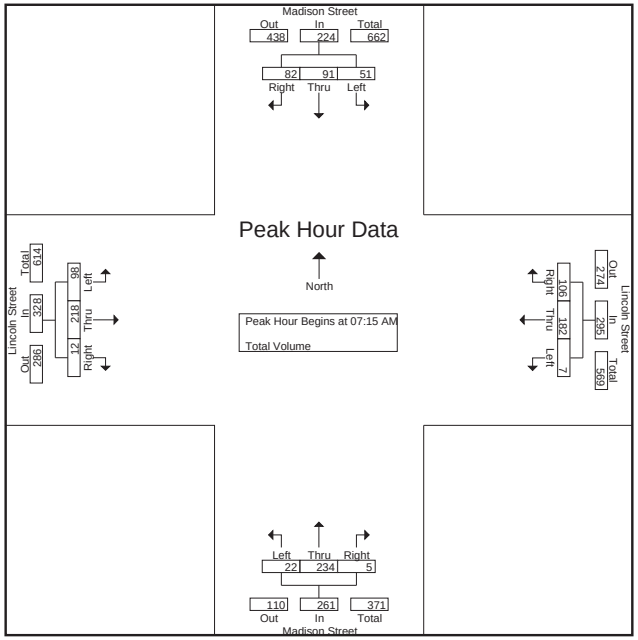

Peak Hour Analysis From 07:00 AM to 08:45 AM - Peak 1 of 1
Peak Hour for Each Approach Begins at:

	07:15 AM				07:15 AM				07:15 AM				07:15 AM			
+0 mins.	**17**	24	20	**61**	**4**	38	25	67	5	54	0	59	24	44	4	72
+15 mins.	15	21	19	55	0	**52**	**34**	**86**	**6**	62	**4**	**72**	18	41	2	61
+30 mins.	7	**25**	20	52	1	47	20	68	5	**64**	0	69	**30**	**75**	0	**105**
+45 mins.	12	21	**23**	56	2	45	27	74	6	54	1	61	26	58	**6**	90
Total Volume	51	91	82	224	7	182	106	295	22	234	5	261	98	218	12	328
% App. Total	22.8	40.6	36.6		2.4	61.7	35.9		8.4	89.7	1.9		29.9	66.5	3.7	
PHF	.750	.910	.891	.918	.438	.875	.779	.858	.917	.914	.313	.906	.817	.727	.500	.781

Counts Unlimited Inc.
PO Box 1178
Corona, CA 92878
(951) 268-6268

City of Riverside
N/S: Madison Street
E/W: Lincoln Avenue
Weather: Sunny

File Name : RIVMALIPM
Site Code : 11028155
Start Date : 2/8/2011
Page No : 1

□oup□P□□te□□Total Volume

	Ma□□o□□t□eet				□□□Iol□A□e□ue				Ma□□o□□t□eet				□□□Iol□A□e□ue				
	□out□Iou□□				□ e□t□ou□□				□o□t□Iou□□				□a□t□ou□□				
□ta□t Time	□e□t	T□□u	□□□□t	App. Total	□e□t	T□□u	□□□□t	App. Total	□e□t	T□□u	□□□□t	App. Total	□e□t	T□□u	□□□□t	App. Total	□□□total
04:00 PM	28	57	16	101	2	42	34	78	2	20	0	22	37	74	4	115	316
04:15 PM	29	49	15	93	2	47	16	65	2	36	2	40	26	45	8	79	277
04:30 PM	19	51	17	87	1	27	29	57	1	23	2	26	30	51	1	82	252
04:45 PM	18	53	21	92	1	22	19	42	2	39	0	41	13	34	1	48	223
Total	94	210	69	373	6	138	98	242	7	118	4	129	106	204	14	324	1068
05:00 PM	26	63	14	103	3	28	20	51	1	28	3	32	26	55	4	85	271
05:15 PM	20	55	19	94	5	37	39	81	2	42	3	47	24	36	6	66	288
05:30 PM	29	58	17	104	1	34	16	51	3	22	1	26	12	40	3	55	236
05:45 PM	21	37	12	70	1	35	23	59	3	23	2	28	17	52	4	73	230
Total	96	213	62	371	10	134	98	242	9	115	9	133	79	183	17	279	1025
□a□□Total	190	423	131	744	16	272	196	484	16	233	13	262	185	387	31	603	2093
App□□%	25.5	56.9	17.6		3.3	56.2	40.5		6.1	88.9	5		30.7	64.2	5.1		
Total %	9.1	20.2	6.3	35.5	0.8	13	9.4	23.1	0.8	11.1	0.6	12.5	8.8	18.5	1.5	28.8	

	Ma□□o□□t□eet				□□□Iol□A□e□ue				Ma□□o□□t□eet				□□□Iol□A□e□ue				
	□out□Iou□□				□ e□t□ou□□				□o□t□Iou□□				□a□t□ou□□				
□ta□t Time	□e□t	T□□u	□□□□t	App. Total	□e□t	T□□u	□□□□t	App. Total	□e□t	T□□u	□□□□t	App. Total	□e□t	T□□u	□□□□t	App. Total	□□□total
Pea□Hou□A□al □□□F□om 04:00 PM to 05:45 PM □Pea□1 o□1																	
Pea□Hou□o□□t□e □te□e□t o□□e□□□at 04:00 PM																	
04:00 PM	28	**57**	16	**101**	**2**	42	**34**	**78**	**2**	20	0	22	**37**	**74**	4	**115**	**316**
04:15 PM	**29**	49	15	93	2	**47**	16	65	2	36	**2**	40	26	45	**8**	79	277
04:30 PM	19	51	17	87	1	27	29	57	1	23	2	26	30	51	1	82	252
04:45 PM	18	53	**21**	92	1	22	19	42	2	**39**	0	**41**	13	34	1	48	223
Total Volume	94	210	69	373	6	138	98	242	7	118	4	129	106	204	14	324	1068
% App. Total	25.2	56.3	18.5		2.5	57	40.5		5.4	91.5	3.1		32.7	63	4.3		
PHF	.810	.921	.821	.923	.750	.734	.721	.776	.875	.756	.500	.787	.716	.689	.438	.704	.845

Counts Unlimited Inc.
PO Box 1178
Corona, CA 92878
(951) 268-6268

City of Riverside
N/S: Madison Street
E/W: Lincoln Avenue
Weather: Sunny

File Name : RIVMALIPM
Site Code : 11028155
Start Date : 2/8/2011
Page No : 2

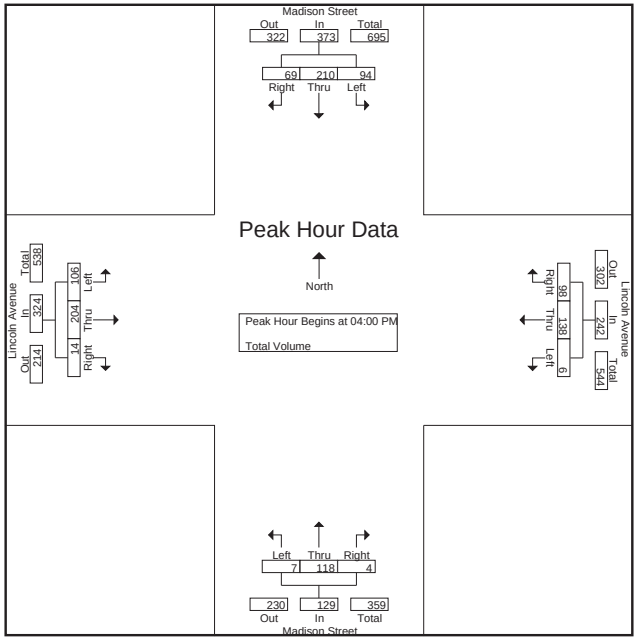

Peak Hour Analysis From 04:00 PM to 05:45 PM - Peak 1 of 1

Pea□Hou□ o□□a□□App□oa□□□e□□□at:

	04:45 PM				04:00 PM				04:30 PM				04:00 PM			
□0 m□□	18	53	**21**	92	**2**	42	**34**	**78**	1	23	2	26	**37**	**74**	4	**115**
□15 m□□	26	**63**	14	103	2	**47**	16	65	**2**	39	0	41	26	45	**8**	79
□30 m□□	20	55	19	94	1	27	29	57	1	28	**3**	32	30	51	1	82
□45 m□□	**29**	58	17	**104**	1	22	19	42	2	**42**	3	**47**	13	34	1	48
Total Volume	93	229	71	393	6	138	98	242	6	132	8	146	106	204	14	324
% App. Total	23.7	58.3	18.1		2.5	57	40.5		4.1	90.4	5.5		32.7	63	4.3	
PHF	.802	.909	.845	.945	.750	.734	.721	.776	.750	.786	.667	.777	.716	.689	.438	.704

Counts Unlimited Inc.
PO Box 1178
Corona, CA 92878
(951) 268-6268

City of Riverisde
N/S: Madison Street
E/W: Victoria Avenue
Weather: Sunny

File Name : RIVMAVIAM
Site Code : 11028066
Start Date : 2/8/2011
Page No : 1

Groups Printed- Total Volume

	Madison Street Southbound				Victoria Avenue Westbound				Madison Street Northbound				Victoria Avenue Eastbound				
Start Time	Left	Thru	Right	App. Total	Left	Thru	Right	App. Total	Left	Thru	Right	App. Total	Left	Thru	Right	App. Total	Int. Total
07:00 AM	19	8	4	31	1	40	27	68	3	6	2	11	5	44	1	50	160
07:15 AM	16	4	8	28	0	50	35	85	0	14	2	16	13	49	0	62	191
07:30 AM	11	7	3	21	0	72	43	115	4	8	1	13	17	78	0	95	244
07:45 AM	12	6	5	23	1	88	37	126	3	10	4	17	11	69	1	81	247
Total	58	25	20	103	2	250	142	394	10	38	9	57	46	240	2	288	842
08:00 AM	16	8	7	31	2	66	29	97	2	12	0	14	15	64	2	81	223
08:15 AM	14	9	7	30	0	55	22	77	0	10	1	11	7	66	3	76	194
08:30 AM	17	11	2	30	2	45	25	72	2	5	1	8	8	53	1	62	172
08:45 AM	12	8	6	26	0	38	25	63	2	4	0	6	8	41	1	50	145
Total	59	36	22	117	4	204	101	309	6	31	2	39	38	224	7	269	734
Grand Total	117	61	42	220	6	454	243	703	16	69	11	96	84	464	9	557	1576
Apprch %	53.2	27.7	19.1		0.9	64.6	34.6		16.7	71.9	11.5		15.1	83.3	1.6		
Total %	7.4	3.9	2.7	14	0.4	28.8	15.4	44.6	1	4.4	0.7	6.1	5.3	29.4	0.6	35.3	

	Madison Street Southbound				Victoria Avenue Westbound				Madison Street Northbound				Victoria Avenue Eastbound				
Start Time	Left	Thru	Right	App. Total	Left	Thru	Right	App. Total	Left	Thru	Right	App. Total	Left	Thru	Right	App. Total	Int. Total
Peak Hour Analysis From 07:00 AM to 08:45 AM - Peak 1 of 1																	
Peak Hour for Entire Intersection Begins at 07:30 AM																	
07:30 AM	11	7	3	21	0	72	**43**	115	**4**	8	1	13	**17**	**78**	0	**95**	244
07:45 AM	12	6	5	23	1	**88**	37	**126**	3	10	**4**	**17**	11	69	1	81	**247**
08:00 AM	**16**	8	**7**	**31**	**2**	66	29	97	2	**12**	0	14	15	64	2	81	223
08:15 AM	14	**9**	7	30	0	55	22	77	0	10	1	11	7	66	**3**	76	194
Total Volume	53	30	22	105	3	281	131	415	9	40	6	55	50	277	6	333	908
% App. Total	50.5	28.6	21		0.7	67.7	31.6		16.4	72.7	10.9		15	83.2	1.8		
PHF	.828	.833	.786	.847	.375	.798	.762	.823	.563	.833	.375	.809	.735	.888	.500	.876	.919

Counts Unlimited Inc.
PO Box 1178
Corona, CA 92878
(951) 268-6268

City of Riverisde
N/S: Madison Street
E/W: Victoria Avenue
Weather: Sunny

File Name : RIVMAVIAM
Site Code : 11028066
Start Date : 2/8/2011
Page No : 2

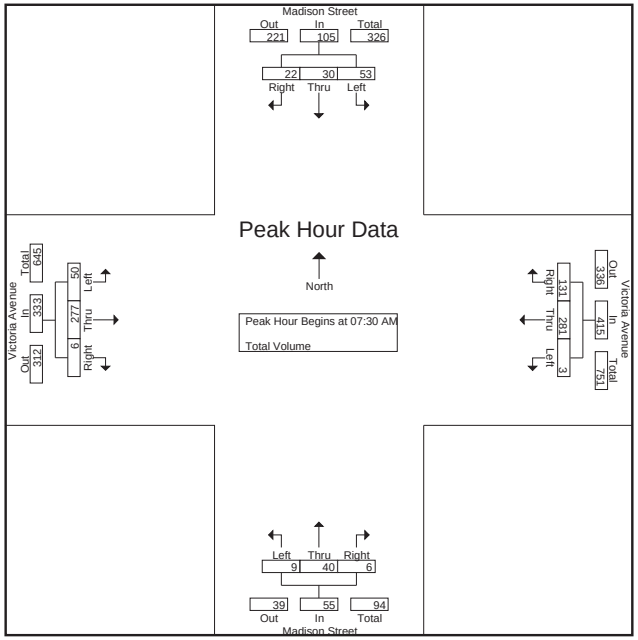

Peak Hour Analysis From 07:00 AM to 08:45 AM - Peak 1 of 1
Peak Hour for Each Approach Begins at:

	08:00 AM				07:15 AM				07:15 AM				07:30 AM			
+0 mins.	16	8	**7**	**31**	0	50	35	85	0	**14**	2	16	**17**	**78**	0	**95**
+15 mins.	14	9	7	30	0	72	**43**	115	**4**	8	1	13	11	69	1	81
+30 mins.	**17**	**11**	2	30	1	**88**	37	**126**	3	10	**4**	**17**	15	64	2	81
+45 mins.	12	8	6	26	**2**	66	29	97	2	12	0	14	7	66	**3**	76
Total Volume	59	36	22	117	3	276	144	423	9	44	7	60	50	277	6	333
% App. Total	50.4	30.8	18.8		0.7	65.2	34		15	73.3	11.7		15	83.2	1.8	
PHF	.868	.818	.786	.944	.375	.784	.837	.839	.563	.786	.438	.882	.735	.888	.500	.876

Counts Unlimited Inc.
PO Box 1178
Corona, CA 92878
(951) 268-6268

City of Riverside
N/S: Madison Street
E/W: Victoria Avenue
Weather: Sunny

File Name : RIVMAVIPM
Site Code : 11028066
Start Date : 2/8/2011
Page No : 1

□oup□P□te□□Total Volume

	Ma□□o□ □t□eet □out□ou□□				V□to□a A□e□ue □ e□t□ou□□				Ma□□o□ □t□eet □o□t□ou□□				V□to□a A□e□ue □a□t□ou□□				
□ta□t Time	□e□t	T□□u	□□□□t	App. Total	□e□t	T□□u	□□□□t	App. Total	□e□t	T□□u	□□□□t	App. Total	□e□t	T□□u	□□□□t	App. Total	□□□total
04:00 PM	34	15	14	63	1	52	14	67	2	3	1	6	6	86	5	97	233
04:15 PM	26	15	9	50	0	41	13	54	0	9	2	11	12	60	4	76	191
04:30 PM	39	17	6	62	2	41	16	59	0	6	2	8	6	71	2	79	208
04:45 PM	35	17	5	57	0	53	22	75	0	7	1	8	15	66	3	84	224
Total	134	64	34	232	3	187	65	255	2	25	6	33	39	283	14	336	856
05:00 PM	38	17	13	68	1	37	21	59	0	6	2	8	8	76	5	89	224
05:15 PM	36	20	6	62	1	46	28	75	2	3	2	7	12	74	1	87	231
05:30 PM	43	12	5	60	2	56	8	66	2	4	1	7	7	68	3	78	211
05:45 PM	30	10	5	45	5	67	16	88	2	8	2	12	4	66	4	74	219
Total	147	59	29	235	9	206	73	288	6	21	7	34	31	284	13	328	885
□a□□Total	281	123	63	467	12	393	138	543	8	46	13	67	70	567	27	664	1741
App□□%	60.2	26.3	13.5		2.2	72.4	25.4		11.9	68.7	19.4		10.5	85.4	4.1		
Total %	16.1	7.1	3.6	26.8	0.7	22.6	7.9	31.2	0.5	2.6	0.7	3.8	4	32.6	1.6	38.1	

	Ma□□o□ □t□eet □out□ou□□				V□to□a A□e□ue □ e□t□ou□□				Ma□□o□ □t□eet □o□t□ou□□				V□to□a A□e□ue □a□t□ou□□				
□ta□t Time	□e□t	T□□u	□□□□t	App. Total	□e□t	T□□u	□□□□t	App. Total	□e□t	T□□u	□□□□t	App. Total	□e□t	T□□u	□□□□t	App. Total	□□□total
Pea□Hou□A□al □□□F□om 04:00 PM to 05:45 PM □Pea□1 o□1																	
Pea□Hou□o□□t□e □te□e□t o□ □e□□□at 04:45 PM																	
04:45 PM	35	17	5	57	0	53	22	**75**	0	**7**	1	**8**	**15**	66	3	84	224
05:00 PM	38	17	**13**	**68**	1	37	21	59	0	6	**2**	8	8	**76**	**5**	**89**	224
05:15 PM	36	**20**	6	62	1	46	**28**	75	**2**	3	2	7	12	74	1	87	**231**
05:30 PM	**43**	12	5	60	**2**	**56**	8	66	2	4	1	7	7	68	3	78	211
Total Volume	152	66	29	247	4	192	79	275	4	20	6	30	42	284	12	338	890
% App. Total	61.5	26.7	11.7		1.5	69.8	28.7		13.3	66.7	20		12.4	84	3.6		
PHF	.884	.825	.558	.908	.500	.857	.705	.917	.500	.714	.750	.938	.700	.934	.600	.949	.963

Counts Unlimited Inc.
PO Box 1178
Corona, CA 92878
(951) 268-6268

City of Riverside
N/S: Madison Street
E/W: Victoria Avenue
Weather: Sunny

File Name : RIVMAVIPM
Site Code : 11028066
Start Date : 2/8/2011
Page No : 2

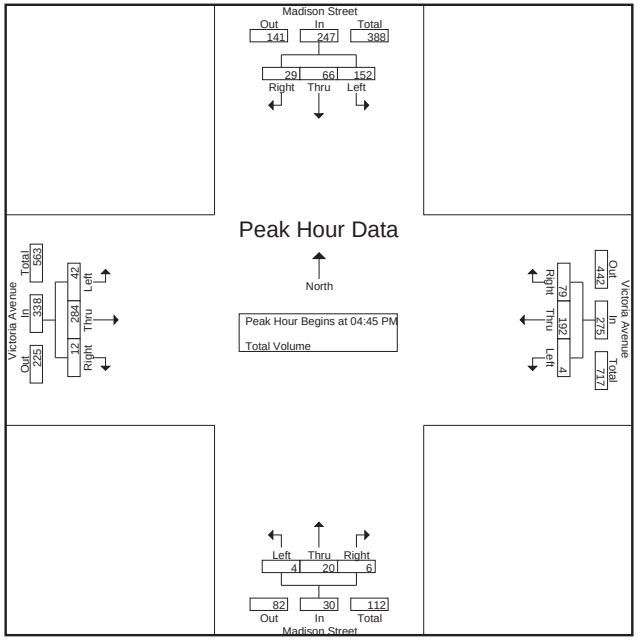

Peak Hour Analysis From 04:00 PM to 05:45 PM - Peak 1 of 1

Pea□Hou□o□□a□□App□oa□□□e□□□at:

	04:30 PM				05:00 PM				04:15 PM				04:30 PM			
□0 m□□	**39**	17	6	62	1	37	21	59	0	**9**	**2**	**11**	6	71	2	79
□15 m□□	35	17	5	57	1	46	**28**	75	0	6	2	8	**15**	66	3	84
□30 m□□	38	17	**13**	**68**	2	56	8	66	0	7	1	8	8	**76**	**5**	**89**
□45 m□□	36	**20**	6	62	**5**	**67**	16	**88**	0	6	2	8	12	74	1	87
Total Volume	148	71	30	249	9	206	73	288	0	28	7	35	41	287	11	339
% App. Total	59.4	28.5	12		3.1	71.5	25.3		0	80	20		12.1	84.7	3.2	
PHF	.949	.888	.577	.915	.450	.769	.652	.818	.000	.778	.875	.795	.683	.944	.550	.952

Counts Unlimited Inc.
PO Box 1178
Corona, CA 92878
(951) 268-6268

City of Riverside
N/S: Washington Street
E/W: Indiana Avenue
Weather: Sunny

File Name : RIVWAINAM
Site Code : 11028131
Start Date : 2/8/2011
Page No : 1

□□oup□P□□te□□Total Volume

	□ a□□□to□□□treet □out□□ou□□				□□a□a A□e□ue □ e□□ou□□				□ a□□□to□□□treet □o□□□ou□□				□□a□a A□e□ue □a□□ou□□				
□ta□□ Time	□e□□	T□□u	□□□□t	App. Total	□e□□	T□□u	□□□□t	App. Total	□e□□	T□□u	□□□□t	App. Total	□e□□	T□□u	□□□□t	App. Total	□□□□total
07:00 AM	0	0	0	0	23	64	0	87	66	3	65	134	1	115	7	123	344
07:15 AM	1	0	0	1	26	73	3	102	83	0	78	161	1	166	16	183	447
07:30 AM	1	0	1	2	14	94	3	111	74	1	73	148	1	196	16	213	474
07:45 AM	0	0	1	1	27	92	2	121	74	2	76	152	6	186	24	216	490
Total	2	0	2	4	90	323	8	421	297	6	292	595	9	663	63	735	1755
08:00 AM	1	0	0	1	20	75	2	97	50	2	78	130	1	174	18	193	421
08:15 AM	0	0	2	2	30	75	5	110	43	1	66	110	7	115	22	144	366
08:30 AM	3	0	0	3	18	74	3	95	53	0	64	117	4	93	21	118	333
08:45 AM	0	1	1	2	18	82	5	105	48	0	60	108	2	79	22	103	318
Total	4	1	3	8	86	306	15	407	194	3	268	465	14	461	83	558	1438
□a□□Total	6	1	5	12	176	629	23	828	491	9	560	1060	23	1124	146	1293	3193
App□□%	50	8.3	41.7		21.3	76	2.8		46.3	0.8	52.8		1.8	86.9	11.3		
Total %	0.2	0	0.2	0.4	5.5	19.7	0.7	25.9	15.4	0.3	17.5	33.2	0.7	35.2	4.6	40.5	

	□ a□□□to□□□treet □out□□ou□□				□□a□a A□e□ue □ e□□ou□□				□ a□□□to□□□treet □o□□□ou□□				□□a□a A□e□ue □a□□ou□□				
□ta□□ Time	□e□□	T□□u	□□□□t	App. Total	□e□□	T□□u	□□□□t	App. Total	□e□□	T□□u	□□□□t	App. Total	□e□□	T□□u	□□□□t	App. Total	□□□□total
Pea□Hou□A□al□□□From 07:00 AM to 08:45 AM □Pea□1 o□1																	
Pea□Hou□o□□□□□e □□te□□e□□o□□e□□□at 07:15 AM																	
07:15 AM	**1**	0	0	1	26	73	**3**	102	**83**	0	**78**	**161**	1	166	16	183	447
07:30 AM	1	0	**1**	**2**	14	**94**	3	111	74	1	73	148	1	**196**	16	213	474
07:45 AM	0	0	1	1	**27**	92	2	**121**	74	**2**	76	152	**6**	186	**24**	**216**	**490**
08:00 AM	1	0	0	1	20	75	2	97	50	2	78	130	1	174	18	193	421
Total Volume	3	0	2	5	87	334	10	431	281	5	305	591	9	722	74	805	1832
% App. Total	60	0	40		20.2	77.5	2.3		47.5	0.8	51.6		1.1	89.7	9.2		
PHF	.750	.000	.500	.625	.806	.888	.833	.890	.846	.625	.978	.918	.375	.921	.771	.932	.935

Counts Unlimited Inc.
PO Box 1178
Corona, CA 92878
(951) 268-6268

City of Riverside
N/S: Washington Street
E/W: Indiana Avenue
Weather: Sunny

File Name : RIVWAINAM
Site Code : 11028131
Start Date : 2/8/2011
Page No : 2

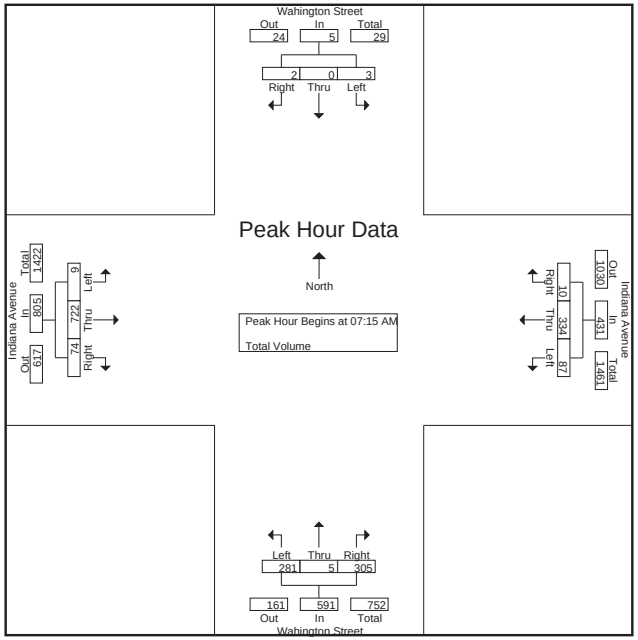

Peak Hour Analysis From 07:00 AM to 08:45 AM - Peak 1 of 1

Peak Hour for Each Approach Begins at:

	08:00 AM				07:30 AM				07:00 AM				07:15 AM			
+0 mins.	1	0	0	1	14	**94**	3	111	66	**3**	65	134	1	166	16	183
+15 mins.	0	0	**2**	2	27	92	2	**121**	**83**	0	**78**	**161**	1	**196**	16	213
+30 mins.	**3**	0	0	**3**	20	75	2	97	74	1	73	148	**6**	186	**24**	**216**
+45 mins.	0	**1**	1	2	**30**	75	**5**	110	74	2	76	152	1	174	18	193
Total Volume	4	1	3	8	91	336	12	439	297	6	292	595	9	722	74	805
% App. Total	50	12.5	37.5		20.7	76.5	2.7		49.9	1	49.1		1.1	89.7	9.2	
PHF	.333	.250	.375	.667	.758	.894	.600	.907	.895	.500	.936	.924	.375	.921	.771	.932

Counts Unlimited Inc.
PO Box 1178
Corona, CA 92878
(951) 268-6268

City of Riverside
N/S: Washington Street
E/W: Indiana Avenue
Weather: Sunny

File Name : RIVWAINPM
Site Code : 11028131
Start Date : 2/8/2011
Page No : 1

□roups Printe□□Total Volume

	□ ashington □treet □outh□oun□				□n□ana A□enue □ est□oun□				□ ashington □treet □orth□oun□				□n□ana A□enue East□oun□				
□tart Time	□eft	Thru	□ight	App. Total	□eft	Thru	□ight	App. Total	□eft	Thru	□ight	App. Total	□eft	Thru	□ight	App. Total	□ntTotal
04:00 PM	2	2	2	6	27	125	2	154	51	0	40	91	4	127	33	164	415
04:15 PM	1	2	0	3	45	94	2	141	39	0	37	76	2	107	40	149	369
04:30 PM	3	0	5	8	42	108	0	150	44	0	35	79	1	117	39	157	394
04:45 PM	1	1	3	5	41	117	1	159	45	1	52	98	0	94	37	131	393
Total	7	5	10	22	155	444	5	604	179	1	164	344	7	445	149	601	1571
05:00 PM	8	2	8	18	43	141	1	185	40	0	28	68	2	127	55	184	455
05:15 PM	2	1	3	6	40	104	0	144	45	0	33	78	1	123	40	164	392
05:30 PM	2	1	0	3	52	121	0	173	46	0	32	78	0	115	36	151	405
05:45 PM	2	1	0	3	39	88	0	127	33	0	28	61	0	90	36	126	317
Total	14	5	11	30	174	454	1	629	164	0	121	285	3	455	167	625	1569
□ran□Total	21	10	21	52	329	898	6	1233	343	1	285	629	10	900	316	1226	3140
Apprch %	40.4	19.2	40.4		26.7	72.8	0.5		54.5	0.2	45.3		0.8	73.4	25.8		
Total %	0.7	0.3	0.7	1.7	10.5	28.6	0.2	39.3	10.9	0	9.1	20	0.3	28.7	10.1	39	

	□ ashington □treet □outh□oun□				□n□ana A□enue □ est□oun□				□ ashington □treet □orth□oun□				□n□ana A□enue East□oun□				
□tart Time	□eft	Thru	□ight	App. Total	□eft	Thru	□ight	App. Total	□eft	Thru	□ight	App. Total	□eft	Thru	□ight	App. Total	□ntTotal
Peak Hour Anal□sis From 04:00 PM to 05:45 PM □Peak 1 of 1																	
Peak Hour for Entire □ntersection Begins at 04:45 PM																	
04:45 PM	1	1	3	5	41	117	**1**	159	45	**1**	**52**	**98**	0	94	37	131	393
05:00 PM	**8**	**2**	**8**	**18**	43	**141**	1	**185**	40	0	28	68	**2**	**127**	**55**	**184**	**455**
05:15 PM	2	1	3	6	40	104	0	144	45	0	33	78	1	123	40	164	392
05:30 PM	2	1	0	3	**52**	121	0	173	**46**	0	32	78	0	115	36	151	405
Total Volume	13	5	14	32	176	483	2	661	176	1	145	322	3	459	168	630	1645
% App. Total	40.6	15.6	43.8		26.6	73.1	0.3		54.7	0.3	45		0.5	72.9	26.7		
PHF	.406	.625	.438	.444	.846	.856	.500	.893	.957	.250	.697	.821	.375	.904	.764	.856	.904

Counts Unlimited Inc.
PO Box 1178
Corona, CA 92878
(951) 268-6268

City of Riverside
N/S: Washington Street
E/W: Indiana Avenue
Weather: Sunny

File Name : RIVWAINPM
Site Code : 11028131
Start Date : 2/8/2011
Page No : 2

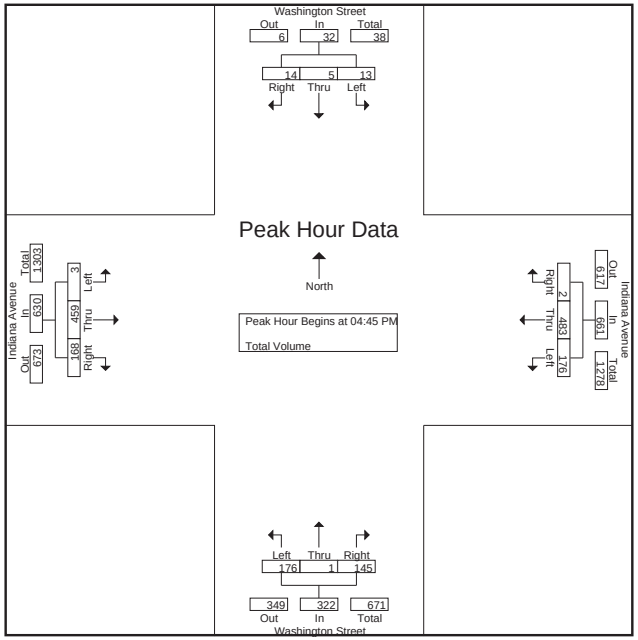

Peak Hour Analysis From 04:00 PM to 05:45 PM - Peak 1 of 1

Peak Hour for Each Approach Begins at:

	04:30 PM				04:45 PM				04:00 PM				04:30 PM			
+0 mins.	3	0	5	8	41	117	**1**	159	**51**	0	40	91	1	117	39	157
+15 mins.	1	1	3	5	43	**141**	1	**185**	39	0	37	76	0	94	37	131
+30 mins.	**8**	**2**	**8**	**18**	40	104	0	144	44	0	35	79	**2**	**127**	**55**	**184**
+45 mins.	2	1	3	6	**52**	121	0	173	45	**1**	**52**	**98**	1	123	40	164
Total Volume	14	4	19	37	176	483	2	661	179	1	164	344	4	461	171	636
% App. Total	37.8	10.8	51.4		26.6	73.1	0.3		52	0.3	47.7		0.6	72.5	26.9	
PHF	.438	.500	.594	.514	.846	.856	.500	.893	.877	.250	.788	.878	.500	.907	.777	.864

Counts Unlimited Inc.
PO Box 1178
Corona, CA 92878
(951) 268-6268

City of Riverside
N/S: Wahington Street
E/W: Lincoln Avenue
Weather: Sunny

File Name : RIVWALIAM
Site Code : 11028035
Start Date : 2/8/2011
Page No : 1

Groups Printed- Total Volume

	Washington Street Southbound				Lincoln Avenue Westbound				Washington Street Northbound				Lincoln Avenue Eastbound				
Start Time	Left	Thru	Right	App. Total	Left	Thru	Right	App. Total	Left	Thru	Right	App. Total	Left	Thru	Right	App. Total	Int. Total
07:00 AM	14	27	5	46	3	27	12	42	5	103	7	115	5	50	0	55	258
07:15 AM	9	23	6	38	3	41	24	68	4	119	7	130	5	51	3	59	295
07:30 AM	17	34	4	55	3	68	19	90	5	112	4	121	3	67	3	73	339
07:45 AM	19	25	8	52	3	43	29	75	8	116	5	129	6	72	1	79	335
Total	59	109	23	191	12	179	84	275	22	450	23	495	19	240	7	266	1227
08:00 AM	8	34	2	44	8	58	20	86	9	101	0	110	7	63	2	72	312
08:15 AM	7	31	3	41	3	27	9	39	5	113	9	127	4	32	1	37	244
08:30 AM	12	36	4	52	3	30	6	39	5	102	2	109	3	27	3	33	233
08:45 AM	7	25	7	39	4	37	8	49	3	87	4	94	4	31	1	36	218
Total	34	126	16	176	18	152	43	213	22	403	15	440	18	153	7	178	1007
Grand Total	93	235	39	367	30	331	127	488	44	853	38	935	37	393	14	444	2234
Apprch %	25.3	64	10.6		6.1	67.8	26		4.7	91.2	4.1		8.3	88.5	3.2		
Total %	4.2	10.5	1.7	16.4	1.3	14.8	5.7	21.8	2	38.2	1.7	41.9	1.7	17.6	0.6	19.9	

	Washington Street Southbound				Lincoln Avenue Westbound				Washington Street Northbound				Lincoln Avenue Eastbound				
Start Time	Left	Thru	Right	App. Total	Left	Thru	Right	App. Total	Left	Thru	Right	App. Total	Left	Thru	Right	App. Total	Int. Total
Peak Hour Analysis From 07:00 AM to 08:45 AM - Peak 1 of 1																	
Peak Hour for Entire Intersection Begins at 07:15 AM																	
07:15 AM	9	23	6	38	3	41	24	68	4	**119**	**7**	**130**	5	51	**3**	59	295
07:30 AM	17	**34**	4	**55**	3	**68**	19	**90**	5	112	4	121	3	67	3	73	**339**
07:45 AM	**19**	25	**8**	52	3	43	**29**	75	8	116	5	129	6	**72**	1	**79**	335
08:00 AM	8	34	2	44	**8**	58	20	86	**9**	101	0	110	**7**	63	2	72	312
Total Volume	53	116	20	189	17	210	92	319	26	448	16	490	21	253	9	283	1281
% App. Total	28	61.4	10.6		5.3	65.8	28.8		5.3	91.4	3.3		7.4	89.4	3.2		
PHF	.697	.853	.625	.859	.531	.772	.793	.886	.722	.941	.571	.942	.750	.878	.750	.896	.945

Counts Unlimited Inc.
PO Box 1178
Corona, CA 92878
(951) 268-6268

City of Riverside
N/S: Wahington Street
E/W: Lincoln Avenue
Weather: Sunny

File Name : RIVWALIAM
Site Code : 11028035
Start Date : 2/8/2011
Page No : 2

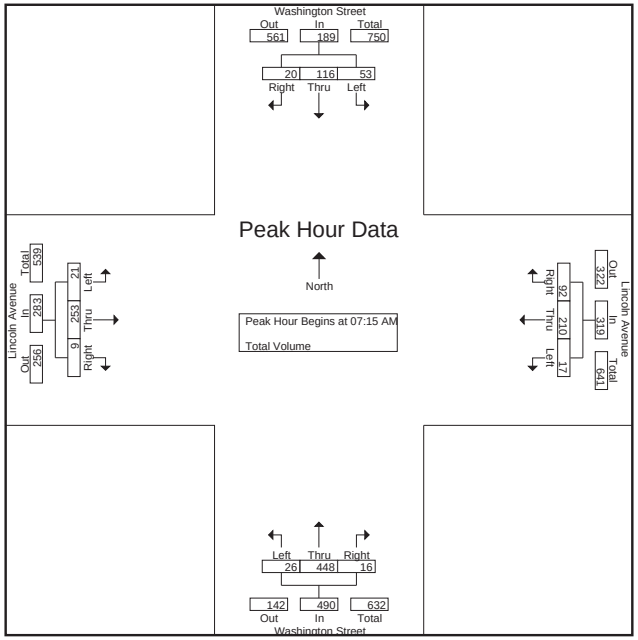

Peak Hour Analysis From 07:00 AM to 08:45 AM - Peak 1 of 1
Peak Hour for Each Approach Begins at:

	07:30 AM				07:15 AM				07:00 AM				07:15 AM			
+0 mins.	17	**34**	4	**55**	3	41	24	68	5	103	**7**	115	5	51	**3**	59
+15 mins.	**19**	25	**8**	52	3	**68**	19	**90**	4	**119**	7	**130**	3	67	3	73
+30 mins.	8	34	2	44	3	43	**29**	75	5	112	4	121	6	**72**	1	**79**
+45 mins.	7	31	3	41	**8**	58	20	86	**8**	116	5	129	**7**	63	2	72
Total Volume	51	124	17	192	17	210	92	319	22	450	23	495	21	253	9	283
% App. Total	26.6	64.6	8.9		5.3	65.8	28.8		4.4	90.9	4.6		7.4	89.4	3.2	
PHF	.671	.912	.531	.873	.531	.772	.793	.886	.688	.945	.821	.952	.750	.878	.750	.896

Counts Unlimited Inc.
PO Box 1178
Corona, CA 92878
(951) 268-6268

City of Riverside
N/S: Washington Street
E/W: Lincoln Avenue
Weather: Sunny

File Name : RIVWALIPM
Site Code : 11028035
Start Date : 2/8/2011
Page No : 1

□roups Printe□□Total Volume

	□ ashington □treet □outh□oun□				□incoln A□enue □ est□oun□				□ ashington □treet □orth□oun□				□incoln A□enue East□oun□				
□tart Time	□eft	Thru	□ight	App. Total	□eft	Thru	□ight	App. Total	□eft	Thru	□ight	App. Total	□eft	Thru	□ight	App. Total	□ntTotal
04:00 PM	12	68	11	91	12	53	13	78	2	61	3	66	4	80	10	94	329
04:15 PM	14	55	7	76	3	49	9	61	9	57	4	70	5	53	5	63	270
04:30 PM	14	76	8	98	5	43	11	59	6	43	2	51	3	57	7	67	275
04:45 PM	15	58	6	79	6	41	9	56	6	58	4	68	3	49	5	57	260
Total	55	257	32	344	26	186	42	254	23	219	13	255	15	239	27	281	1134
05:00 PM	12	55	7	74	3	47	7	57	7	49	5	61	3	65	6	74	266
05:15 PM	18	68	4	90	11	65	18	94	10	54	2	66	3	48	5	56	306
05:30 PM	5	70	3	78	8	35	12	55	8	57	2	67	8	56	6	70	270
05:45 PM	15	59	7	81	11	46	17	74	4	45	7	56	1	62	9	72	283
Total	50	252	21	323	33	193	54	280	29	205	16	250	15	231	26	272	1125
□ran□Total	105	509	53	667	59	379	96	534	52	424	29	505	30	470	53	553	2259
Apprch %	15.7	76.3	7.9		11	71	18		10.3	84	5.7		5.4	85	9.6		
Total %	4.6	22.5	2.3	29.5	2.6	16.8	4.2	23.6	2.3	18.8	1.3	22.4	1.3	20.8	2.3	24.5	

	□ ashington □treet □outh□oun□				□incoln A□enue □ est□oun□				□ ashington □treet □orth□oun□				□incoln A□enue East□oun□				
□tart Time	□eft	Thru	□ight	App. Total	□eft	Thru	□ight	App. Total	□eft	Thru	□ight	App. Total	□eft	Thru	□ight	App. Total	□ntTotal
Peak Hour Anal□sis From 04:00 PM to 05:45 PM □Peak 1 of 1																	
Peak Hour for Entire □ntersection Begins at 04:00 PM																	
04:00 PM	12	68	**11**	91	**12**	**53**	**13**	**78**	2	**61**	3	66	4	**80**	**10**	**94**	**329**
04:15 PM	14	55	7	76	3	49	9	61	**9**	57	**4**	**70**	**5**	53	5	63	270
04:30 PM	14	**76**	8	**98**	5	43	11	59	6	43	2	51	3	57	7	67	275
04:45 PM	**15**	58	6	79	6	41	9	56	6	58	4	68	3	49	5	57	260
Total Volume	55	257	32	344	26	186	42	254	23	219	13	255	15	239	27	281	1134
% App. Total	16	74.7	9.3		10.2	73.2	16.5		9	85.9	5.1		5.3	85.1	9.6		
PHF	.917	.845	.727	.878	.542	.877	.808	.814	.639	.898	.813	.911	.750	.747	.675	.747	.862

Counts Unlimited Inc.
PO Box 1178
Corona, CA 92878
(951) 268-6268

City of Riverside
N/S: Washington Street
E/W: Lincoln Avenue
Weather: Sunny

File Name : RIVWALIPM
Site Code : 11028035
Start Date : 2/8/2011
Page No : 2

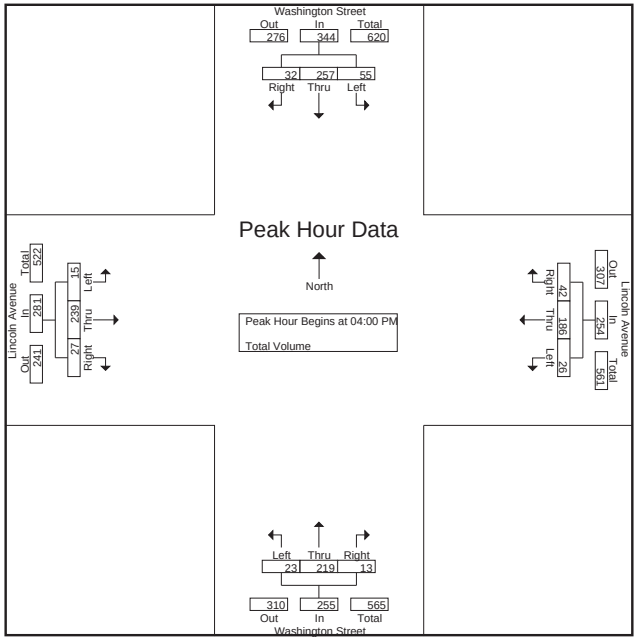

Peak Hour Analysis From 04:00 PM to 05:45 PM - Peak 1 of 1

Peak Hour for Each Approach Begins at:

	04:00 PM				05:00 PM				04:45 PM				04:00 PM			
+0 mins.	12	68	**11**	91	3	47	7	57	6	**58**	4	**68**	4	**80**	**10**	**94**
+15 mins.	14	55	7	76	**11**	**65**	**18**	**94**	7	49	**5**	61	**5**	53	5	63
+30 mins.	14	**76**	8	**98**	8	35	12	55	**10**	54	2	66	3	57	7	67
+45 mins.	**15**	58	6	79	11	46	17	74	8	57	2	67	3	49	5	57
Total Volume	55	257	32	344	33	193	54	280	31	218	13	262	15	239	27	281
% App. Total	16	74.7	9.3		11.8	68.9	19.3		11.8	83.2	5		5.3	85.1	9.6	
PHF	.917	.845	.727	.878	.750	.742	.750	.745	.775	.940	.650	.963	.750	.747	.675	.747

Counts Unlimited Inc.
PO Box 1178
Corona, CA 92878
(951) 268-6268

City of Riverside
N/S: Washington Street
E/W: Victoria Avenue
Weather: Clear

File Name : RICWAVIAM
Site Code : 00000043
Start Date : 2/8/2011
Page No : 1

□roups Printe□□Total Volume

	□ ashington □treet □outh□oun□				Victoria A□enue □ est□oun□				□ ashington □treet □orth□oun□				Victoria A□enue East□oun□				
□tart Time	□eft	Thru	□ight	App. Total	□eft	Thru	□ight	App. Total	□eft	Thru	□ight	App. Total	□eft	Thru	□ight	App. Total	□ntTotal
07:00 AM	4	35	6	45	30	33	6	69	34	101	78	213	1	36	19	56	383
07:15 AM	1	22	2	25	33	44	10	87	36	122	101	259	3	42	12	57	428
07:30 AM	7	32	2	41	30	57	7	94	47	123	91	261	2	60	18	80	476
07:45 AM	7	27	3	37	29	69	10	108	52	107	90	249	5	56	16	77	471
Total	19	116	13	148	122	203	33	358	169	453	360	982	11	194	65	270	1758
08:00 AM	2	39	4	45	40	53	4	97	30	80	80	190	2	55	16	73	405
08:15 AM	2	30	2	34	33	37	3	73	36	111	94	241	1	59	19	79	427
08:30 AM	2	36	2	40	35	34	4	73	37	96	65	198	7	41	24	72	383
08:45 AM	2	23	2	27	20	22	2	44	38	86	77	201	0	30	15	45	317
Total	8	128	10	146	128	146	13	287	141	373	316	830	10	185	74	269	1532
□ran□Total	27	244	23	294	250	349	46	645	310	826	676	1812	21	379	139	539	3290
Apprch %	9.2	83	7.8		38.8	54.1	7.1		17.1	45.6	37.3		3.9	70.3	25.8		
Total %	0.8	7.4	0.7	8.9	7.6	10.6	1.4	19.6	9.4	25.1	20.5	55.1	0.6	11.5	4.2	16.4	

	□ ashington □treet □outh□oun□				Victoria A□enue □ est□oun□				□ ashington □treet □orth□oun□				Victoria A□enue East□oun□				
□tart Time	□eft	Thru	□ight	App. Total	□eft	Thru	□ight	App. Total	□eft	Thru	□ight	App. Total	□eft	Thru	□ight	App. Total	□ntTotal
Peak Hour Anal□sis From 07:00 AM to 08:45 AM □Peak 1 of 1																	
Peak Hour for Entire □ntersection Begins at 07:15 AM																	
07:15 AM	1	22	2	25	33	44	**10**	87	36	122	**101**	259	3	42	12	57	428
07:30 AM	**7**	32	2	41	30	57	7	94	47	**123**	91	**261**	2	**60**	**18**	**80**	**476**
07:45 AM	7	27	3	37	29	**69**	10	**108**	**52**	107	90	249	**5**	56	16	77	471
08:00 AM	2	**39**	**4**	**45**	**40**	53	4	97	30	80	80	190	2	55	16	73	405
Total Volume	17	120	11	148	132	223	31	386	165	432	362	959	12	213	62	287	1780
% App. Total	11.5	81.1	7.4		34.2	57.8	8		17.2	45	37.7		4.2	74.2	21.6		
PHF	.607	.769	.688	.822	.825	.808	.775	.894	.793	.878	.896	.919	.600	.888	.861	.897	.935

Counts Unlimited Inc.
PO Box 1178
Corona, CA 92878
(951) 268-6268

City of Riverside
N/S: Washington Street
E/W: Victoria Avenue
Weather: Clear

File Name : RICWAVIAM
Site Code : 00000043
Start Date : 2/8/2011
Page No : 2

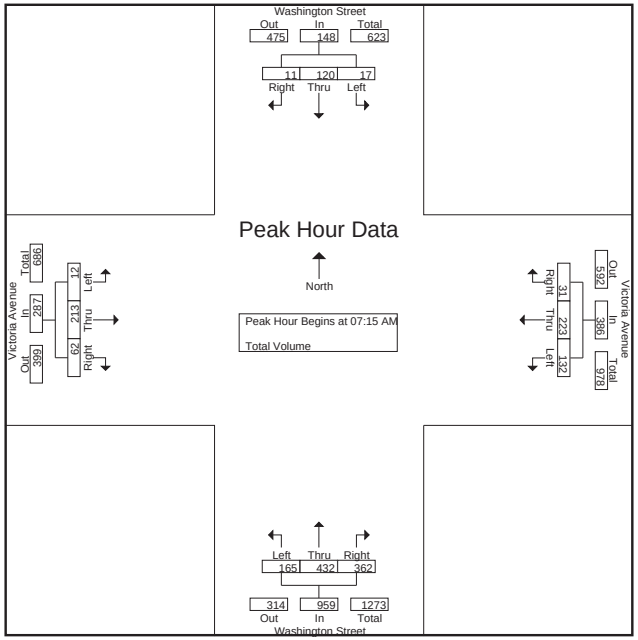

Peak Hour Analysis From 07:00 AM to 08:45 AM - Peak 1 of 1

Peak Hour for Each Approach Begins at:

	07:30 AM				07:15 AM				07:00 AM				07:30 AM			
+0 mins.	**7**	32	2	41	33	44	**10**	87	34	101	78	213	2	**60**	18	**80**
+15 mins.	7	27	3	37	30	57	7	94	36	122	**101**	259	**5**	56	16	77
+30 mins.	2	**39**	**4**	**45**	29	**69**	10	**108**	47	**123**	91	**261**	2	55	16	73
+45 mins.	2	30	2	34	**40**	53	4	97	**52**	107	90	249	1	59	**19**	79
Total Volume	18	128	11	157	132	223	31	386	169	453	360	982	10	230	69	309
% App. Total	11.5	81.5	7		34.2	57.8	8		17.2	46.1	36.7		3.2	74.4	22.3	
PHF	.643	.821	.688	.872	.825	.808	.775	.894	.813	.921	.891	.941	.500	.958	.908	.966

Counts Unlimited Inc.
PO Box 1178
Corona, CA 92878
(951) 268-6268

City of Riverside
N/S: Washington Street
E/W: Victoria Avenue
Weather: Sunny

File Name : RIVWAVIPM
Site Code : 11028043
Start Date : 2/8/2011
Page No : 1

□roups Printe□□Total Volume

	□ ashington □treet □outh□oun□				Victoria A□enue □ est□oun□				□ ashington □treet □orth□oun□				Victoria A□enue East□oun□				
□tart Time	□eft	Thru	□ight	App. Total	□eft	Thru	□ight	App. Total	□eft	Thru	□ight	App. Total	□eft	Thru	□ight	App. Total	□ntTotal
04:00 PM	1	62	1	64	59	39	3	101	26	65	32	123	1	60	48	109	397
04:15 PM	2	61	0	63	73	32	4	109	23	56	31	110	0	46	48	94	376
04:30 PM	3	64	1	68	61	30	1	92	26	52	45	123	2	46	53	101	384
04:45 PM	1	75	2	78	77	55	4	136	17	58	39	114	1	40	60	101	429
Total	7	262	4	273	270	156	12	438	92	231	147	470	4	192	209	405	1586
05:00 PM	1	67	2	70	78	34	7	119	21	59	32	112	2	53	57	112	413
05:15 PM	0	71	1	72	77	41	4	122	31	53	43	127	1	57	54	112	433
05:30 PM	1	80	0	81	69	42	5	116	20	53	39	112	1	57	46	104	413
05:45 PM	3	78	0	81	75	59	3	137	24	49	34	107	1	48	54	103	428
Total	5	296	3	304	299	176	19	494	96	214	148	458	5	215	211	431	1687
□ran□Total	12	558	7	577	569	332	31	932	188	445	295	928	9	407	420	836	3273
Apprch %	2.1	96.7	1.2		61.1	35.6	3.3		20.3	48	31.8		1.1	48.7	50.2		
Total %	0.4	17	0.2	17.6	17.4	10.1	0.9	28.5	5.7	13.6	9	28.4	0.3	12.4	12.8	25.5	

	□ ashington □treet □outh□oun□				Victoria A□enue □ est□oun□				□ ashington □treet □orth□oun□				Victoria A□enue East□oun□				
□tart Time	□eft	Thru	□ight	App. Total	□eft	Thru	□ight	App. Total	□eft	Thru	□ight	App. Total	□eft	Thru	□ight	App. Total	□ntTotal
Peak Hour Anal□sis From 04:00 PM to 05:45 PM □Peak 1 of 1																	
Peak Hour for Entire □ntersection Begins at 04:45 PM																	
04:45 PM	**1**	75	**2**	78	77	**55**	4	**136**	17	58	39	114	1	40	**60**	101	429
05:00 PM	1	67	2	70	**78**	34	**7**	119	21	**59**	32	112	**2**	53	57	**112**	413
05:15 PM	0	71	1	72	77	41	4	122	**31**	53	**43**	**127**	1	**57**	54	112	**433**
05:30 PM	1	**80**	0	**81**	69	42	5	116	20	53	39	112	1	57	46	104	413
Total Volume	3	293	5	301	301	172	20	493	89	223	153	465	5	207	217	429	1688
% App. Total	1	97.3	1.7		61.1	34.9	4.1		19.1	48	32.9		1.2	48.3	50.6		
PHF	.750	.916	.625	.929	.965	.782	.714	.906	.718	.945	.890	.915	.625	.908	.904	.958	.975

Counts Unlimited Inc.
PO Box 1178
Corona, CA 92878
(951) 268-6268

City of Riverside
N/S: Washington Street
E/W: Victoria Avenue
Weather: Sunny

File Name : RIVWAVIPM
Site Code : 11028043
Start Date : 2/8/2011
Page No : 2

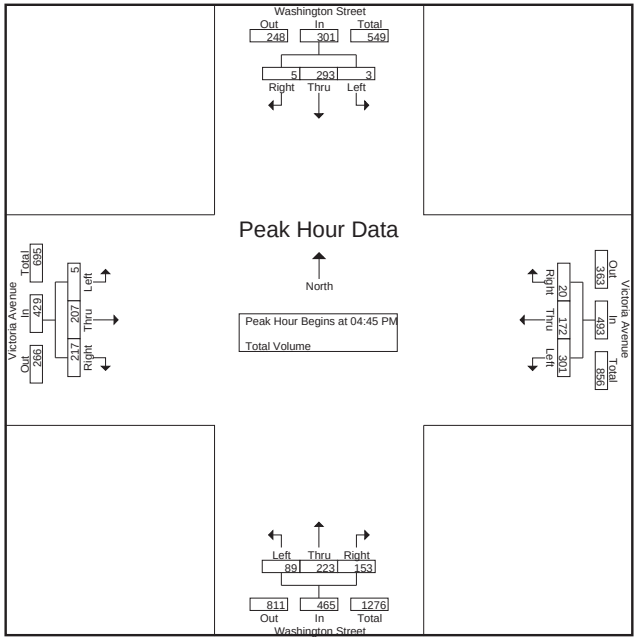

Peak Hour Analysis From 04:00 PM to 05:45 PM - Peak 1 of 1

Peak Hour for Each Approach Begins at:

	05:00 PM				05:00 PM				04:30 PM				05:00 PM			
+0 mins.	1	67	**2**	70	**78**	34	**7**	119	26	52	**45**	123	**2**	53	**57**	**112**
+15 mins.	0	71	1	72	77	41	4	122	17	58	39	114	1	**57**	54	112
+30 mins.	1	**80**	0	**81**	69	42	5	116	21	**59**	32	112	1	57	46	104
+45 mins.	**3**	78	0	81	75	**59**	3	**137**	**31**	53	43	**127**	1	48	54	103
Total Volume	5	296	3	304	299	176	19	494	95	222	159	476	5	215	211	431
% App. Total	1.6	97.4	1		60.5	35.6	3.8		20	46.6	33.4		1.2	49.9	49	
PHF	.417	.925	.375	.938	.958	.746	.679	.901	.766	.941	.883	.937	.625	.943	.925	.962

Counts Unlimited Inc.
PO Box 1178
Corona, CA 92878
(951) 268-6268

City of Riverside
N/S: Washington Street
E/W: Overlook Parkway
Weather: Sunny

File Name : RIVWAOLAM
Site Code : 11028099
Start Date : 2/9/2011
Page No : 1

□roups Printe□□Total Volume

	□ ashington □treet □outh□oun□			□□erlook Park□a□ □ est□oun□			□ ashington □treet □orth□oun□			
□tart Time	□eft	Thru	App. Total	□eft	□ight	App. Total	Thru	□ight	App. Total	□ntTotal
07:00 AM	14	62	76	4	32	36	223	2	225	337
07:15 AM	20	53	73	2	46	48	232	2	234	355
07:30 AM	22	65	87	3	65	68	262	2	264	419
07:45 AM	16	64	80	2	53	55	211	4	215	350
Total	72	244	316	11	196	207	928	10	938	1461
08:00 AM	26	80	106	5	44	49	182	1	183	338
08:15 AM	19	66	85	4	40	44	187	6	193	322
08:30 AM	20	55	75	2	57	59	171	4	175	309
08:45 AM	20	50	70	4	34	38	157	3	160	268
Total	85	251	336	15	175	190	697	14	711	1237
□ran□Total	157	495	652	26	371	397	1625	24	1649	2698
Apprch %	24.1	75.9		6.5	93.5		98.5	1.5		
Total %	5.8	18.3	24.2	1	13.8	14.7	60.2	0.9	61.1	

	□ ashington □treet □outh□oun□			□□erlook Park□a□ □ est□oun□			□ ashington □treet □orth□oun□			
□tart Time	□eft	Thru	App. Total	□eft	□ight	App. Total	Thru	□ight	App. Total	□ntTotal
Peak Hour Anal□sis From 07:00 AM to 08:45 AM □Peak 1 of 1										
Peak Hour for Entire □ntersection Begins at 07:15 AM										
07:15 AM	20	53	73	2	46	48	232	2	234	355
07:30 AM	22	65	87	3	**65**	**68**	**262**	2	**264**	**419**
07:45 AM	16	64	80	2	53	55	211	**4**	215	350
08:00 AM	**26**	**80**	**106**	**5**	44	49	182	1	183	338
Total Volume	84	262	346	12	208	220	887	9	896	1462
% App. Total	24.3	75.7		5.5	94.5		99	1		
PHF	.808	.819	.816	.600	.800	.809	.846	.563	.848	.872

Counts Unlimited Inc.
PO Box 1178
Corona, CA 92878
(951) 268-6268

City of Riverside
N/S: Washington Street
E/W: Overlook Parkway
Weather: Sunny

File Name : RIVWAOLAM
Site Code : 11028099
Start Date : 2/9/2011
Page No : 2

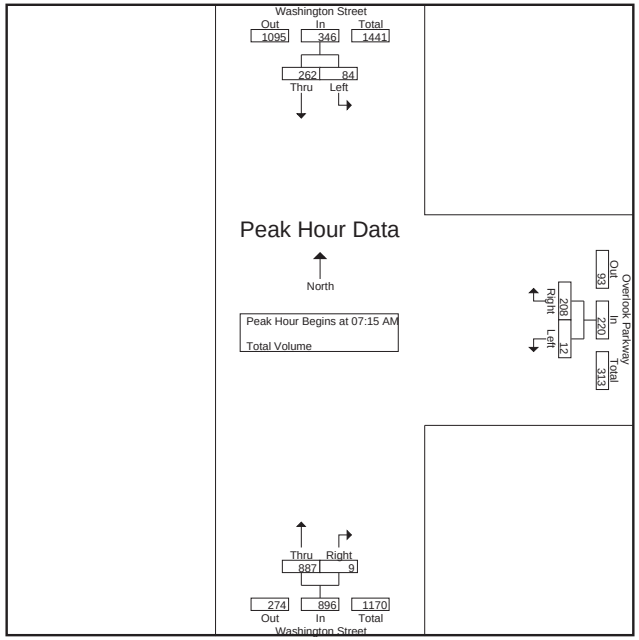

Peak Hour Analysis From 07:00 AM to 08:45 AM - Peak 1 of 1

Peak Hour for Each Approach Begins at:

	07:30 AM			07:15 AM			07:00 AM		
+0 mins.	22	65	87	2	46	48	223	2	225
+15 mins.	16	64	80	3	**65**	**68**	232	2	234
+30 mins.	**26**	**80**	**106**	2	53	55	**262**	2	**264**
+45 mins.	19	66	85	**5**	44	49	211	**4**	215
Total Volume	83	275	358	12	208	220	928	10	938
% App. Total	23.2	76.8		5.5	94.5		98.9	1.1	
PHF	.798	.859	.844	.600	.800	.809	.885	.625	.888

Counts Unlimited Inc.
PO Box 1178
Corona, CA 92878
(951) 268-6268

City of Riverside
N/S: Washington Street
E/W: Overlook Parkway
Weather: Sunny

File Name : RIVWAOLPM
Site Code : 11028099
Start Date : 2/9/2011
Page No : 1

□roups Printe□□Total Volume

	□ ashington □treet □outh□oun□			□□erlook Park□a□ □ est□oun□			□ ashington □treet □orth□oun□			
□tart Time	□eft	Thru	App. Total	□eft	□ight	App. Total	Thru	□ight	App. Total	□ntTotal
04:00 PM	22	69	91	7	21	28	59	2	61	180
04:15 PM	20	85	105	6	23	29	69	3	72	206
04:30 PM	32	160	192	5	24	29	93	3	96	317
04:45 PM	27	166	193	3	31	34	89	3	92	319
Total	101	480	581	21	99	120	310	11	321	1022
05:00 PM	47	132	179	2	24	26	105	5	110	315
05:15 PM	36	187	223	2	31	33	102	2	104	360
05:30 PM	33	175	208	5	26	31	80	4	84	323
05:45 PM	40	162	202	2	30	32	91	1	92	326
Total	156	656	812	11	111	122	378	12	390	1324
□ran□Total	257	1136	1393	32	210	242	688	23	711	2346
Apprch %	18.4	81.6		13.2	86.8		96.8	3.2		
Total %	11	48.4	59.4	1.4	9	10.3	29.3	1	30.3	

	□ ashington □treet □outh□oun□			□□erlook Park□a□ □ est□oun□			□ ashington □treet □orth□oun□			
□tart Time	□eft	Thru	App. Total	□eft	□ight	App. Total	Thru	□ight	App. Total	□ntTotal
Peak Hour Anal□sis From 04:00 PM to 05:45 PM □Peak 1 of 1										
Peak Hour for Entire □ntersection Begins at 05:00 PM										
05:00 PM	**47**	132	179	2	24	26	**105**	**5**	**110**	315
05:15 PM	36	**187**	**223**	2	**31**	**33**	102	2	104	**360**
05:30 PM	33	175	208	**5**	26	31	80	4	84	323
05:45 PM	40	162	202	2	30	32	91	1	92	326
Total Volume	156	656	812	11	111	122	378	12	390	1324
% App. Total	19.2	80.8		9	91		96.9	3.1		
PHF	.830	.877	.910	.550	.895	.924	.900	.600	.886	.919

Counts Unlimited Inc.
PO Box 1178
Corona, CA 92878
(951) 268-6268

City of Riverside
N/S: Washington Street
E/W: Overlook Parkway
Weather: Sunny

File Name : RIVWAOLPM
Site Code : 11028099
Start Date : 2/9/2011
Page No : 2

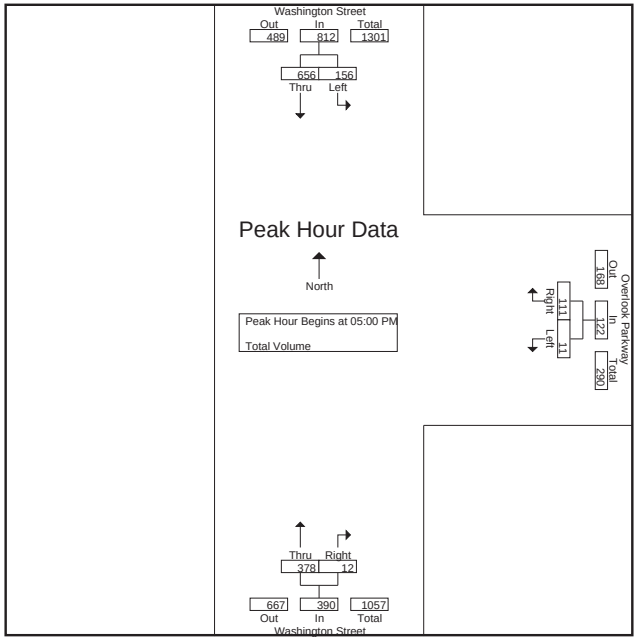

Peak Hour Analysis From 04:00 PM to 05:45 PM - Peak 1 of 1

Peak Hour for Each Approach Begins at:

	05:00 PM			04:45 PM			04:30 PM		
+0 mins.	**47**	132	179	3	**31**	**34**	93	3	96
+15 mins.	36	**187**	**223**	2	24	26	89	3	92
+30 mins.	33	175	208	2	31	33	**105**	**5**	**110**
+45 mins.	40	162	202	**5**	26	31	102	2	104
Total Volume	156	656	812	12	112	124	389	13	402
% App. Total	19.2	80.8		9.7	90.3		96.8	3.2	
PHF	.830	.877	.910	.600	.903	.912	.926	.650	.914

Counts Unlimited Inc.
PO Box 1178
Corona, CA 92878
(951) 268-6268

City of Riverside
N/S: Arlington Avenue
E/W: SR-91 WB On Ramp/Riverside Avenue
Weather: Sunny

File Name : RIVAR91WRIAM
Site Code : 11028066
Start Date : 2/9/2011
Page No : 1

Groups Printed- Total Volume

	Arlington Avenue Southbound				Riverside Avenue Westbound				Arlington Avenue Northbound				SR-91 Westbound On Ramp Eastbound				
Start Time	Left	Thru	Right	App. Total	Left	Thru	Right	App. Total	Left	Thru	Right	App. Total	Left	Thru	Right	App. Total	Int. Total
07:00 AM	3	163	11	177	124	6	79	209	113	128	32	273	0	0	0	0	659
07:15 AM	10	211	15	236	136	8	128	272	132	233	72	437	0	0	0	0	945
07:30 AM	18	167	31	216	118	19	117	254	120	245	78	443	0	0	0	0	913
07:45 AM	22	208	34	264	130	8	139	277	133	230	76	439	0	0	0	0	980
Total	53	749	91	893	508	41	463	1012	498	836	258	1592	0	0	0	0	3497
08:00 AM	23	191	39	253	124	14	113	251	121	215	67	403	0	0	0	0	907
08:15 AM	17	229	39	285	116	7	170	293	137	247	53	437	0	0	0	0	1015
08:30 AM	17	186	28	231	104	12	113	229	117	167	36	320	0	0	0	0	780
08:45 AM	10	143	24	177	102	7	136	245	129	196	54	379	0	0	0	0	801
Total	67	749	130	946	446	40	532	1018	504	825	210	1539	0	0	0	0	3503
Grand Total	120	1498	221	1839	954	81	995	2030	1002	1661	468	3131	0	0	0	0	7000
Apprch %	6.5	81.5	12		47	4	49		32	53.1	14.9		0	0	0		
Total %	1.7	21.4	3.2	26.3	13.6	1.2	14.2	29	14.3	23.7	6.7	44.7	0	0	0	0	

	Arlington Avenue Southbound				Riverside Avenue Westbound				Arlington Avenue Northbound				SR-91 Westbound On Ramp Eastbound				
Start Time	Left	Thru	Right	App. Total	Left	Thru	Right	App. Total	Left	Thru	Right	App. Total	Left	Thru	Right	App. Total	Int. Total
Peak Hour Analysis From 07:00 AM to 08:45 AM - Peak 1 of 1																	
Peak Hour for Entire Intersection Begins at 07:30 AM																	
07:30 AM	18	167	31	216	118	**19**	117	254	120	245	**78**	**443**	0	0	0	0	913
07:45 AM	22	208	34	264	**130**	8	139	277	133	230	76	439	0	0	0	0	980
08:00 AM	**23**	191	**39**	253	124	14	113	251	121	215	67	403	0	0	0	0	907
08:15 AM	17	**229**	39	**285**	116	7	**170**	**293**	**137**	**247**	53	437	0	0	0	0	**1015**
Total Volume	80	795	143	1018	488	48	539	1075	511	937	274	1722	0	0	0	0	3815
% App. Total	7.9	78.1	14		45.4	4.5	50.1		29.7	54.4	15.9		0	0	0		
PHF	.870	.868	.917	.893	.938	.632	.793	.917	.932	.948	.878	.972	.000	.000	.000	.000	.940

Counts Unlimited Inc.
PO Box 1178
Corona, CA 92878
(951) 268-6268

City of Riverside
N/S: Arlington Avenue
E/W: SR-91 WB On Ramp/Riverside Avenue
Weather: Sunny

File Name : RIVAR91WRIAM
Site Code : 11028066
Start Date : 2/9/2011
Page No : 2

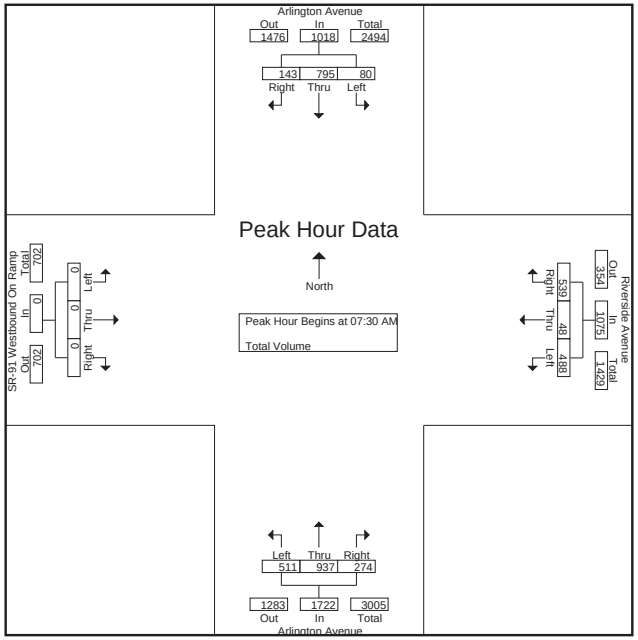

Peak Hour Analysis From 07:00 AM to 08:45 AM - Peak 1 of 1
Peak Hour for Each Approach Begins at:

	07:45 AM				07:30 AM				07:15 AM				07:00 AM			
+0 mins.	22	208	34	264	118	**19**	117	254	132	233	72	437	0	0	0	0
+15 mins.	**23**	191	**39**	253	**130**	8	139	277	120	**245**	**78**	**443**	0	0	0	0
+30 mins.	17	**229**	39	**285**	124	14	113	251	**133**	230	76	439	0	0	0	0
+45 mins.	17	186	28	231	116	7	**170**	**293**	121	215	67	403	0	0	0	0
Total Volume	79	814	140	1033	488	48	539	1075	506	923	293	1722	0	0	0	0
% App. Total	7.6	78.8	13.6		45.4	4.5	50.1		29.4	53.6	17		0	0	0	
PHF	.859	.889	.897	.906	.938	.632	.793	.917	.951	.942	.939	.972	.000	.000	.000	.000

Counts Unlimited Inc.
PO Box 1178
Corona, CA 92878
(951) 268-6268

City of Riverside
N/S: Arlington Avenue
E/W: SR-91 WB On Ramp/Riverside Avenue
Weather: Sunny

File Name : RIVAR91WRIPM
Site Code : 11028066
Start Date : 2/9/2011
Page No : 1

□roups Printe□□Total Volume

	Arlington A□enue □outh□oun□				□i□ersi□e A□enue □ est□oun□				Arlington A□enue □orth□oun□				□□91 □ est□oun□□n □amp East□oun□				
□tart Time	□eft	Thru	□ight	App. Total	□eft	Thru	□ight	App. Total	□eft	Thru	□ight	App. Total	□eft	Thru	□ight	App. Total	□ntTotal
04:00 PM	16	250	48	314	141	18	91	250	90	185	51	326	0	0	0	0	890
04:15 PM	10	253	39	302	168	20	108	296	95	157	40	292	0	0	0	0	890
04:30 PM	15	268	56	339	151	25	84	260	97	173	49	319	0	0	0	0	918
04:45 PM	12	258	46	316	157	19	80	256	104	187	38	329	0	0	0	0	901
Total	53	1029	189	1271	617	82	363	1062	386	702	178	1266	0	0	0	0	3599
05:00 PM	7	234	58	299	181	30	128	339	96	190	42	328	0	0	0	0	966
05:15 PM	10	260	46	316	183	23	118	324	111	208	58	377	0	0	0	0	1017
05:30 PM	12	274	56	342	172	16	107	295	111	190	36	337	0	0	0	0	974
05:45 PM	7	267	34	308	160	21	100	281	105	195	43	343	0	0	0	0	932
Total	36	1035	194	1265	696	90	453	1239	423	783	179	1385	0	0	0	0	3889
□ran□Total	89	2064	383	2536	1313	172	816	2301	809	1485	357	2651	0	0	0	0	7488
Apprch %	3.5	81.4	15.1		57.1	7.5	35.5		30.5	56	13.5		0	0	0		
Total %	1.2	27.6	5.1	33.9	17.5	2.3	10.9	30.7	10.8	19.8	4.8	35.4	0	0	0	0	

	Arlington A□enue □outh□oun□				□i□ersi□e A□enue □ est□oun□				Arlington A□enue □orth□oun□				□□91 □ est□oun□□n □amp East□oun□				
□tart Time	□eft	Thru	□ight	App. Total	□eft	Thru	□ight	App. Total	□eft	Thru	□ight	App. Total	□eft	Thru	□ight	App. Total	□ntTotal
Peak Hour Anal□sis From 04:00 PM to 05:45 PM □Peak 1 of 1																	
Peak Hour for Entire □ntersection Begins at 05:00 PM																	
05:00 PM	7	234	**58**	299	181	**30**	**128**	**339**	96	190	42	328	0	0	0	0	966
05:15 PM	10	260	46	316	**183**	23	118	324	**111**	**208**	**58**	**377**	0	0	0	0	**1017**
05:30 PM	**12**	**274**	56	**342**	172	16	107	295	111	190	36	337	0	0	0	0	974
05:45 PM	7	267	34	308	160	21	100	281	105	195	43	343	0	0	0	0	932
Total Volume	36	1035	194	1265	696	90	453	1239	423	783	179	1385	0	0	0	0	3889
% App. Total	2.8	81.8	15.3		56.2	7.3	36.6		30.5	56.5	12.9		0	0	0		
PHF	.750	.944	.836	.925	.951	.750	.885	.914	.953	.941	.772	.918	.000	.000	.000	.000	.956

Counts Unlimited Inc.
PO Box 1178
Corona, CA 92878
(951) 268-6268

City of Riverside
N/S: Arlington Avenue
E/W: SR-91 WB On Ramp/Riverside Avenue
Weather: Sunny

File Name : RIVAR91WRIPM
Site Code : 11028066
Start Date : 2/9/2011
Page No : 2

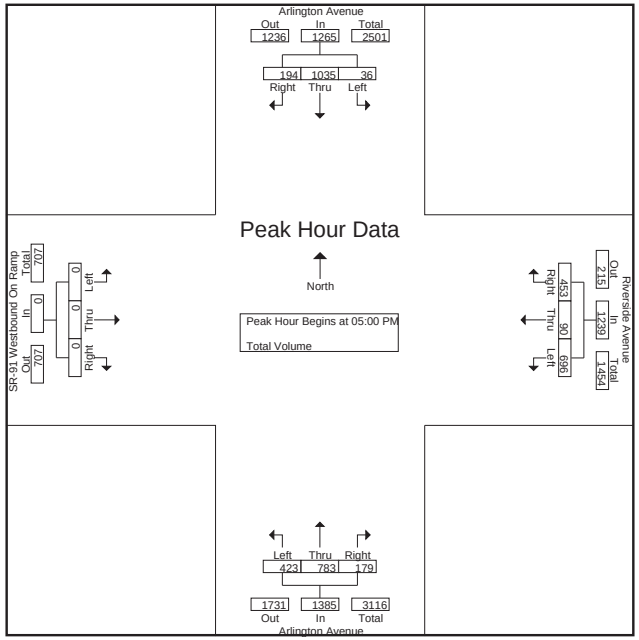

Peak Hour Analysis From 04:00 PM to 05:45 PM - Peak 1 of 1

Peak Hour for Each Approach Begins at:

	04:45 PM				05:00 PM				05:00 PM				04:00 PM			
+0 mins.	**12**	258	46	316	181	**30**	**128**	**339**	96	190	42	328	0	0	0	0
+15 mins.	7	234	**58**	299	**183**	23	118	324	**111**	**208**	**58**	**377**	0	0	0	0
+30 mins.	10	260	46	316	172	16	107	295	111	190	36	337	0	0	0	0
+45 mins.	12	**274**	56	**342**	160	21	100	281	105	195	43	343	0	0	0	0
Total Volume	41	1026	206	1273	696	90	453	1239	423	783	179	1385	0	0	0	0
% App. Total	3.2	80.6	16.2		56.2	7.3	36.6		30.5	56.5	12.9		0	0	0	
PHF	.854	.936	.888	.931	.951	.750	.885	.914	.953	.941	.772	.918	.000	.000	.000	.000

Counts Unlimited Inc.
PO Box 1178
Corona, CA 92878
(951) 268-6268

City of Riverside
N/S: Arlington Avenue
E/W: SR-91 EB On Ramp/Indiana Avenue
Weather: Sunny

File Name : RIVAR91EINAM
Site Code : 11028063
Start Date : 2/9/2011
Page No : 1

Groups Printed- Total Volume

	Arlington Avenue Southbound				SR-91 Eastbound On Ramp Westbound				Arlington Avenue Northbound				Indiana Avenue Eastbound				
Start Time	Left	Thru	Right	App. Total	Left	Thru	Right	App. Total	Left	Thru	Right	App. Total	Left	Thru	Right	App. Total	Int. Total
07:00 AM	68	155	34	257	0	0	0	0	14	266	91	371	25	98	79	202	830
07:15 AM	67	219	36	322	0	0	0	0	25	391	98	514	47	118	120	285	1121
07:30 AM	65	197	41	303	0	0	0	0	29	424	102	555	41	109	105	255	1113
07:45 AM	63	167	61	291	0	0	0	0	23	366	124	513	56	123	78	257	1061
Total	263	738	172	1173	0	0	0	0	91	1447	415	1953	169	448	382	999	4125
08:00 AM	73	215	46	334	0	0	0	0	29	401	106	536	35	67	112	214	1084
08:15 AM	86	194	51	331	0	0	0	0	25	313	55	393	50	89	75	214	938
08:30 AM	75	168	59	302	0	0	0	0	40	304	56	400	44	83	83	210	912
08:45 AM	66	136	39	241	0	0	0	0	46	288	47	381	50	71	76	197	819
Total	300	713	195	1208	0	0	0	0	140	1306	264	1710	179	310	346	835	3753
Grand Total	563	1451	367	2381	0	0	0	0	231	2753	679	3663	348	758	728	1834	7878
Apprch %	23.6	60.9	15.4		0	0	0		6.3	75.2	18.5		19	41.3	39.7		
Total %	7.1	18.4	4.7	30.2	0	0	0	0	2.9	34.9	8.6	46.5	4.4	9.6	9.2	23.3	

	Arlington Avenue Southbound				SR-91 Eastbound On Ramp Westbound				Arlington Avenue Northbound				Indiana Avenue Eastbound				
Start Time	Left	Thru	Right	App. Total	Left	Thru	Right	App. Total	Left	Thru	Right	App. Total	Left	Thru	Right	App. Total	Int. Total
Peak Hour Analysis From 07:00 AM to 08:45 AM - Peak 1 of 1																	
Peak Hour for Entire Intersection Begins at 07:15 AM																	
07:15 AM	67	**219**	36	322	0	0	0	0	25	391	98	514	47	118	**120**	**285**	**1121**
07:30 AM	65	197	41	303	0	0	0	0	**29**	**424**	102	**555**	41	109	105	255	1113
07:45 AM	63	167	**61**	291	0	0	0	0	23	366	**124**	513	**56**	**123**	78	257	1061
08:00 AM	**73**	215	46	**334**	0	0	0	0	29	401	106	536	35	67	112	214	1084
Total Volume	268	798	184	1250	0	0	0	0	106	1582	430	2118	179	417	415	1011	4379
% App. Total	21.4	63.8	14.7		0	0	0		5	74.7	20.3		17.7	41.2	41		
PHF	.918	.911	.754	.936	.000	.000	.000	.000	.914	.933	.867	.954	.799	.848	.865	.887	.977

Counts Unlimited Inc.
PO Box 1178
Corona, CA 92878
(951) 268-6268

City of Riverside
N/S: Arlington Avenue
E/W: SR-91 EB On Ramp/Indiana Avenue
Weather: Sunny

File Name : RIVAR91EINAM
Site Code : 11028063
Start Date : 2/9/2011
Page No : 2

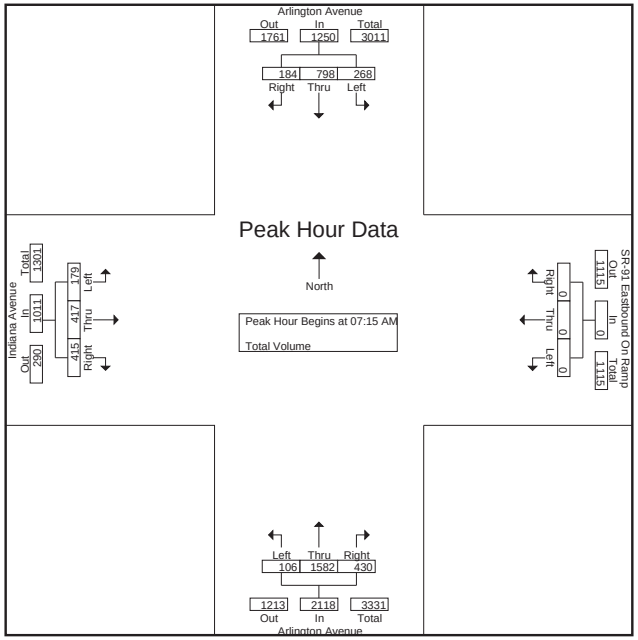

Peak Hour Analysis From 07:00 AM to 08:45 AM - Peak 1 of 1
Peak Hour for Each Approach Begins at:

	07:30 AM				07:00 AM				07:15 AM				07:15 AM			
+0 mins.	65	197	41	303	0	0	0	0	25	391	98	514	47	118	**120**	**285**
+15 mins.	63	167	**61**	291	0	0	0	0	**29**	**424**	102	**555**	41	109	105	255
+30 mins.	73	**215**	46	**334**	0	0	0	0	23	366	**124**	513	**56**	**123**	78	257
+45 mins.	**86**	194	51	331	0	0	0	0	29	401	106	536	35	67	112	214
Total Volume	287	773	199	1259	0	0	0	0	106	1582	430	2118	179	417	415	1011
% App. Total	22.8	61.4	15.8		0	0	0		5	74.7	20.3		17.7	41.2	41	
PHF	.834	.899	.816	.942	.000	.000	.000	.000	.914	.933	.867	.954	.799	.848	.865	.887

Counts Unlimited Inc.
PO Box 1178
Corona, CA 92878
(951) 268-6268

City of Riverside
N/S: Arlington Avenue
E/W: SR-91 EB On Ramp/Indiana Avenue
Weather: Sunny

File Name : RIVAR91EINPM
Site Code : 11028063
Start Date : 2/9/2011
Page No : 1

Groups Printed- Total Volume

	Arlimgton Avenue Southbound				SR-91 Eastbound On Ramp Westbound				Arlimgton Avenue Northbound				Indiana Avenue Eastbound				
Start Time	Left	Thru	Right	App. Total	Left	Thru	Right	App. Total	Left	Thru	Right	App. Total	Left	Thru	Right	App. Total	Int. Total
04:00 PM	88	208	64	360	0	0	0	0	36	285	70	391	55	45	100	200	951
04:15 PM	90	225	69	384	0	0	0	0	37	232	54	323	55	48	111	214	921
04:30 PM	84	275	81	440	0	0	0	0	39	283	65	387	44	68	111	223	1050
04:45 PM	71	249	71	391	0	0	0	0	29	302	52	383	33	68	105	206	980
Total	333	957	285	1575	0	0	0	0	141	1102	241	1484	187	229	427	843	3902
05:00 PM	67	234	84	385	0	0	0	0	28	282	66	376	52	75	109	236	997
05:15 PM	85	258	71	414	0	0	0	0	38	341	43	422	51	86	116	253	1089
05:30 PM	84	286	74	444	0	0	0	0	39	301	52	392	46	60	118	224	1060
05:45 PM	84	257	61	402	0	0	0	0	40	314	41	395	46	67	122	235	1032
Total	320	1035	290	1645	0	0	0	0	145	1238	202	1585	195	288	465	948	4178
Grand Total	653	1992	575	3220	0	0	0	0	286	2340	443	3069	382	517	892	1791	8080
Apprch %	20.3	61.9	17.9		0	0	0		9.3	76.2	14.4		21.3	28.9	49.8		
Total %	8.1	24.7	7.1	39.9	0	0	0	0	3.5	29	5.5	38	4.7	6.4	11	22.2	

	Arlimgton Avenue Southbound				SR-91 Eastbound On Ramp Westbound				Arlimgton Avenue Northbound				Indiana Avenue Eastbound				
Start Time	Left	Thru	Right	App. Total	Left	Thru	Right	App. Total	Left	Thru	Right	App. Total	Left	Thru	Right	App. Total	Int. Total
Peak Hour Analysis From 04:00 PM to 05:45 PM - Peak 1 of 1																	
Peak Hour for Entire Intersection Begins at 05:00 PM																	
05:00 PM	67	234	**84**	385	0	0	0	0	28	282	**66**	376	**52**	75	109	236	997
05:15 PM	**85**	258	71	414	0	0	0	0	38	**341**	43	**422**	51	**86**	116	**253**	**1089**
05:30 PM	84	**286**	74	**444**	0	0	0	0	39	301	52	392	46	60	118	224	1060
05:45 PM	84	257	61	402	0	0	0	0	**40**	314	41	395	46	67	**122**	235	1032
Total Volume	320	1035	290	1645	0	0	0	0	145	1238	202	1585	195	288	465	948	4178
% App. Total	19.5	62.9	17.6		0	0	0		9.1	78.1	12.7		20.6	30.4	49.1		
PHF	.941	.905	.863	.926	.000	.000	.000	.000	.906	.908	.765	.939	.938	.837	.953	.937	.959

Counts Unlimited Inc.
PO Box 1178
Corona, CA 92878
(951) 268-6268

City of Riverside
N/S: Arlington Avenue
E/W: SR-91 EB On Ramp/Indiana Avenue
Weather: Sunny

File Name : RIVAR91EINPM
Site Code : 11028063
Start Date : 2/9/2011
Page No : 2

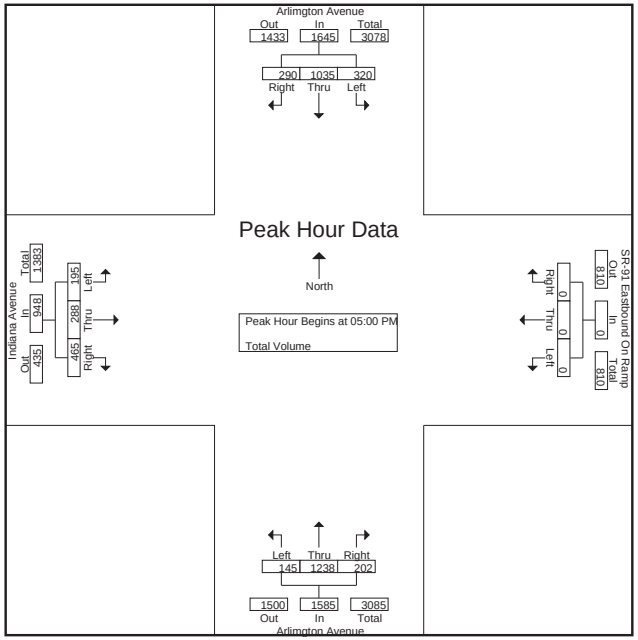

Peak Hour Analysis From 04:00 PM to 05:45 PM - Peak 1 of 1

Peak Hour for Each Approach Begins at:

	05:00 PM				04:00 PM				05:00 PM				05:00 PM			
0 mins.	67	234	**84**	385	0	0	0	0	28	282	**66**	376	**52**	75	109	236
15 mins.	**85**	258	71	414	0	0	0	0	38	**341**	43	**422**	51	**86**	116	**253**
30 mins.	84	**286**	74	**444**	0	0	0	0	39	301	52	392	46	60	118	224
45 mins.	84	257	61	402	0	0	0	0	**40**	314	41	395	46	67	**122**	235
Total Volume	320	1035	290	1645	0	0	0	0	145	1238	202	1585	195	288	465	948
% App. Total	19.5	62.9	17.6		0	0	0		9.1	78.1	12.7		20.6	30.4	49.1	
PHF	.941	.905	.863	.926	.000	.000	.000	.000	.906	.908	.765	.939	.938	.837	.953	.937

Counts Unlimited Inc.
PO Box 1178
Corona, CA 92878
(951) 268-6268

City of Riverside
N/S: Victoria Avenue
E/W: Arlington Avenue
Weather: Sunny

File Name : RIVVIARAM
Site Code : 11028043
Start Date : 2/9/2011
Page No : 1

Groups Printed- Total Volume

	Victoria Avenue Southbound				Arlington Avenue Westbound				Victoria Avenue Northbound				Arlington Avenue Eastbound				
Start Time	Left	Thru	Right	App. Total	Left	Thru	Right	App. Total	Left	Thru	Right	App. Total	Left	Thru	Right	App. Total	Int. Total
07:00 AM	15	61	12	88	92	289	26	407	9	70	60	139	23	135	1	159	793
07:15 AM	20	94	17	131	118	344	29	491	6	122	101	229	34	192	1	227	1078
07:30 AM	42	52	43	137	68	322	89	479	10	119	90	219	47	196	1	244	1079
07:45 AM	57	95	55	207	109	355	78	542	6	91	87	184	44	182	3	229	1162
Total	134	302	127	563	387	1310	222	1919	31	402	338	771	148	705	6	859	4112
08:00 AM	19	29	15	63	60	332	4	396	5	68	103	176	21	209	1	231	866
08:15 AM	10	26	10	46	58	325	10	393	3	48	83	134	24	192	1	217	790
08:30 AM	6	13	16	35	31	275	8	314	2	39	57	98	23	187	2	212	659
08:45 AM	9	25	13	47	55	249	1	305	2	47	48	97	27	142	1	170	619
Total	44	93	54	191	204	1181	23	1408	12	202	291	505	95	730	5	830	2934
Grand Total	178	395	181	754	591	2491	245	3327	43	604	629	1276	243	1435	11	1689	7046
Apprch %	23.6	52.4	24		17.8	74.9	7.4		3.4	47.3	49.3		14.4	85	0.7		
Total %	2.5	5.6	2.6	10.7	8.4	35.4	3.5	47.2	0.6	8.6	8.9	18.1	3.4	20.4	0.2	24	

	Victoria Avenue Southbound				Arlington Avenue Westbound				Victoria Avenue Northbound				Arlington Avenue Eastbound				
Start Time	Left	Thru	Right	App. Total	Left	Thru	Right	App. Total	Left	Thru	Right	App. Total	Left	Thru	Right	App. Total	Int. Total
Peak Hour Analysis From 07:00 AM to 08:45 AM - Peak 1 of 1																	
Peak Hour for Entire Intersection Begins at 07:15 AM																	
07:15 AM	20	94	17	131	**118**	344	29	491	6	**122**	101	**229**	34	192	1	227	1078
07:30 AM	42	52	43	137	68	322	**89**	479	**10**	119	90	219	**47**	196	1	**244**	1079
07:45 AM	**57**	**95**	**55**	**207**	109	**355**	78	**542**	6	91	87	184	44	182	**3**	229	**1162**
08:00 AM	19	29	15	63	60	332	4	396	5	68	**103**	176	21	**209**	1	231	866
Total Volume	138	270	130	538	355	1353	200	1908	27	400	381	808	146	779	6	931	4185
% App. Total	25.7	50.2	24.2		18.6	70.9	10.5		3.3	49.5	47.2		15.7	83.7	0.6		
PHF	.605	.711	.591	.650	.752	.953	.562	.880	.675	.820	.925	.882	.777	.932	.500	.954	.900

Counts Unlimited Inc.
PO Box 1178
Corona, CA 92878
(951) 268-6268

City of Riverside
N/S: Victoria Avenue
E/W: Arlington Avenue
Weather: Sunny

File Name : RIVVIARAM
Site Code : 11028043
Start Date : 2/9/2011
Page No : 2

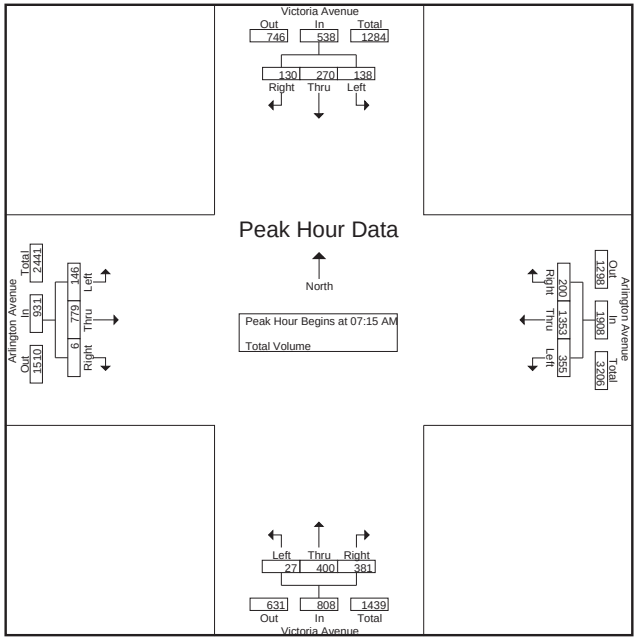

Peak Hour Analysis From 07:00 AM to 08:45 AM - Peak 1 of 1

Peak Hour for Each Approach Begins at:

	07:00 AM				07:00 AM				07:15 AM				07:15 AM			
0 mins.	15	61	12	88	92	289	26	407	6	**122**	101	**229**	34	192	1	227
15 mins.	20	94	17	131	**118**	344	29	491	**10**	119	90	219	**47**	196	1	**244**
30 mins.	42	52	43	137	68	322	**89**	479	6	91	87	184	44	182	**3**	229
45 mins.	**57**	**95**	**55**	**207**	109	**355**	78	**542**	5	68	**103**	176	21	**209**	1	231
Total Volume	134	302	127	563	387	1310	222	1919	27	400	381	808	146	779	6	931
% App. Total	23.8	53.6	22.6		20.2	68.3	11.6		3.3	49.5	47.2		15.7	83.7	0.6	
PHF	.588	.795	.577	.680	.820	.923	.624	.885	.675	.820	.925	.882	.777	.932	.500	.954

Counts Unlimited Inc.
PO Box 1178
Corona, CA 92878
(951) 268-6268

City of Riverside
N/S: Victoria Avenue
E/W: Arlington Avenue
Weather: Sunny

File Name : RIVVIARPM
Site Code : 11028043
Start Date : 2/9/2011
Page No : 1

Groups Printed- Total Volume

	Victoria Avenue Southbound				Arlington Avenue Westbound				Victoria Avenue Northbound				Arlington Avenue Eastbound				
Start Time	Left	Thru	Right	App. Total	Left	Thru	Right	App. Total	Left	Thru	Right	App. Total	Left	Thru	Right	App. Total	Int. Total
04:00 PM	14	60	26	100	64	233	7	304	7	49	93	149	32	252	3	287	840
04:15 PM	12	71	26	109	79	217	6	302	3	42	87	132	20	269	5	294	837
04:30 PM	11	74	20	105	50	224	5	279	10	39	114	163	11	313	3	327	874
04:45 PM	17	57	24	98	81	275	9	365	6	38	90	134	17	338	3	358	955
Total	54	262	96	412	274	949	27	1250	26	168	384	578	80	1172	14	1266	3506
05:00 PM	17	62	29	108	72	271	6	349	5	40	111	156	14	257	8	279	892
05:15 PM	24	83	24	131	78	271	6	355	6	37	117	160	16	316	10	342	988
05:30 PM	11	54	27	92	76	298	8	382	8	36	129	173	17	316	6	339	986
05:45 PM	24	62	22	108	69	243	8	320	7	35	97	139	20	292	11	323	890
Total	76	261	102	439	295	1083	28	1406	26	148	454	628	67	1181	35	1283	3756
Grand Total	130	523	198	851	569	2032	55	2656	52	316	838	1206	147	2353	49	2549	7262
Apprch %	15.3	61.5	23.3		21.4	76.5	2.1		4.3	26.2	69.5		5.8	92.3	1.9		
Total %	1.8	7.2	2.7	11.7	7.8	28	0.8	36.6	0.7	4.4	11.5	16.6	2	32.4	0.7	35.1	

	Victoria Avenue Southbound				Arlington Avenue Westbound				Victoria Avenue Northbound				Arlington Avenue Eastbound				
Start Time	Left	Thru	Right	App. Total	Left	Thru	Right	App. Total	Left	Thru	Right	App. Total	Left	Thru	Right	App. Total	Int. Total
Peak Hour Analysis From 04:00 PM to 05:45 PM - Peak 1 of 1																	
Peak Hour for Entire Intersection Begins at 04:45 PM																	
04:45 PM	17	57	24	98	**81**	275	**9**	365	6	38	90	134	**17**	**338**	3	**358**	955
05:00 PM	17	62	**29**	108	72	271	6	349	5	**40**	111	156	14	257	8	279	892
05:15 PM	**24**	**83**	24	**131**	78	271	6	355	6	37	117	160	16	316	**10**	342	**988**
05:30 PM	11	54	27	92	76	**298**	8	**382**	**8**	36	**129**	**173**	17	316	6	339	986
Total Volume	69	256	104	429	307	1115	29	1451	25	151	447	623	64	1227	27	1318	3821
% App. Total	16.1	59.7	24.2		21.2	76.8	2		4	24.2	71.7		4.9	93.1	2		
PHF	.719	.771	.897	.819	.948	.935	.806	.950	.781	.944	.866	.900	.941	.908	.675	.920	.967

Counts Unlimited Inc.
PO Box 1178
Corona, CA 92878
(951) 268-6268

City of Riverside
N/S: Victoria Avenue
E/W: Arlington Avenue
Weather: Sunny

File Name : RIVVIARPM
Site Code : 11028043
Start Date : 2/9/2011
Page No : 2

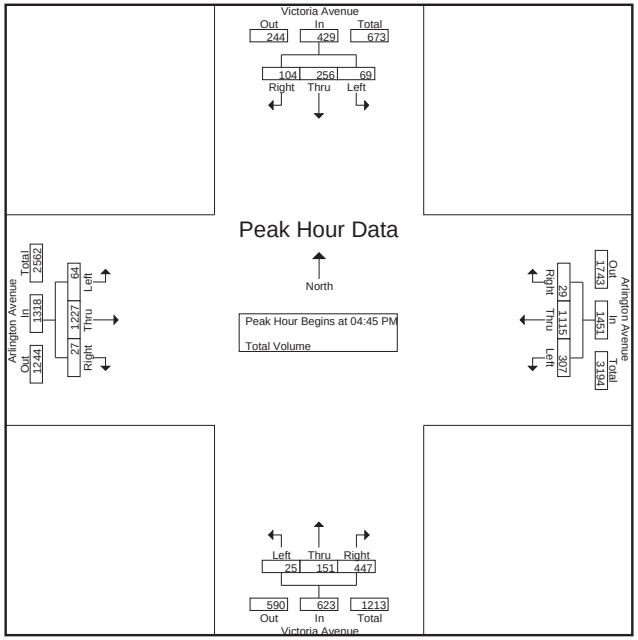

Peak Hour Analysis From 04:00 PM to 05:45 PM - Peak 1 of 1

Peak Hour for Each Approach Begins at:

	04:30 PM				04:45 PM				05:00 PM				04:45 PM			
0 mins.	11	74	20	105	**81**	275	**9**	365	5	**40**	111	156	**17**	**338**	3	**358**
15 mins.	17	57	24	98	72	271	6	349	6	37	117	160	14	257	8	279
30 mins.	17	62	**29**	108	78	271	6	355	**8**	36	**129**	**173**	16	316	**10**	342
45 mins.	**24**	**83**	24	**131**	76	**298**	8	**382**	7	35	97	139	17	316	6	339
Total Volume	69	276	97	442	307	1115	29	1451	26	148	454	628	64	1227	27	1318
% App. Total	15.6	62.4	21.9		21.2	76.8	2		4.1	23.6	72.3		4.9	93.1	2	
PHF	.719	.831	.836	.844	.948	.935	.806	.950	.813	.925	.880	.908	.941	.908	.675	.920

Counts Unlimited Inc.
PO Box 1178
Corona, CA 92878
(951) 268-6268

City of Riverside
N/S: Alessandro Boulevard
E/W: Arlington Avenue/Chicago Avenue
Weather: Sunny

File Name : RIVALARAM
Site Code : 11028035
Start Date : 2/9/2011
Page No : 1

Groups Printed- Total Volume

	Alessandro Boulevard Southbound				Chicago Avenue Westbound				Alessandro Boulevard Northbound				Arlington Avenue Eastbound				
Start Time	Left	Thru	Right	App. Total	Left	Thru	Right	App. Total	Left	Thru	Right	App. Total	Left	Thru	Right	App. Total	Int. Total
07:00 AM	27	95	11	133	10	127	45	182	275	330	55	660	5	89	112	206	1181
07:15 AM	53	91	8	152	10	128	57	195	282	396	89	767	13	134	150	297	1411
07:30 AM	67	99	8	174	18	136	82	236	350	401	78	829	6	139	161	306	1545
07:45 AM	65	110	13	188	31	143	51	225	344	317	68	729	10	163	140	313	1455
Total	212	395	40	647	69	534	235	838	1251	1444	290	2985	34	525	563	1122	5592
08:00 AM	51	88	14	153	22	122	48	192	198	269	72	539	13	154	173	340	1224
08:15 AM	54	99	8	161	26	93	70	189	243	298	49	590	18	130	146	294	1234
08:30 AM	54	106	8	168	29	79	43	151	199	295	45	539	9	103	120	232	1090
08:45 AM	42	85	11	138	17	87	59	163	184	232	50	466	10	101	119	230	997
Total	201	378	41	620	94	381	220	695	824	1094	216	2134	50	488	558	1096	4545
Grand Total	413	773	81	1267	163	915	455	1533	2075	2538	506	5119	84	1013	1121	2218	10137
Apprch %	32.6	61	6.4		10.6	59.7	29.7		40.5	49.6	9.9		3.8	45.7	50.5		
Total %	4.1	7.6	0.8	12.5	1.6	9	4.5	15.1	20.5	25	5	50.5	0.8	10	11.1	21.9	

	Alessandro Boulevard Southbound				Chicago Avenue Westbound				Alessandro Boulevard Northbound				Arlington Avenue Eastbound				
Start Time	Left	Thru	Right	App. Total	Left	Thru	Right	App. Total	Left	Thru	Right	App. Total	Left	Thru	Right	App. Total	Int. Total
Peak Hour Analysis From 07:00 AM to 08:45 AM - Peak 1 of 1																	
Peak Hour for Entire Intersection Begins at 07:15 AM																	
07:15 AM	53	91	8	152	10	128	57	195	282	396	**89**	767	**13**	134	150	297	1411
07:30 AM	**67**	99	8	174	18	136	**82**	**236**	**350**	**401**	78	**829**	6	139	161	306	**1545**
07:45 AM	65	**110**	13	**188**	**31**	**143**	51	225	344	317	68	729	10	**163**	140	313	1455
08:00 AM	51	88	**14**	153	22	122	48	192	198	269	72	539	13	154	**173**	**340**	1224
Total Volume	236	388	43	667	81	529	238	848	1174	1383	307	2864	42	590	624	1256	5635
% App. Total	35.4	58.2	6.4		9.6	62.4	28.1		41	48.3	10.7		3.3	47	49.7		
PHF	.881	.882	.768	.887	.653	.925	.726	.898	.839	.862	.862	.864	.808	.905	.902	.924	.912

Counts Unlimited Inc.
PO Box 1178
Corona, CA 92878
(951) 268-6268

City of Riverside
N/S: Alessandro Boulevard
E/W: Arlington Avenue/Chicago Avenue
Weather: Sunny

File Name : RIVALARAM
Site Code : 11028035
Start Date : 2/9/2011
Page No : 2

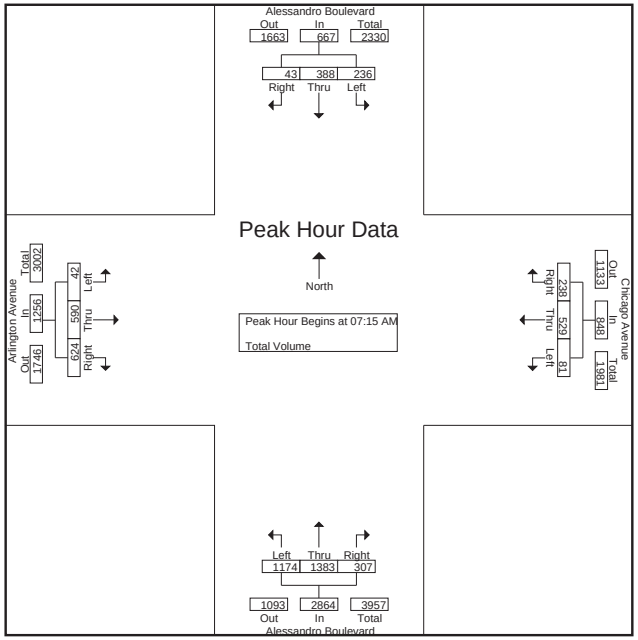

Peak Hour Analysis From 07:00 AM to 08:45 AM - Peak 1 of 1
Peak Hour for Each Approach Begins at:

	07:30 AM				07:15 AM				07:00 AM				07:15 AM			
+0 mins.	**67**	99	8	174	10	128	57	195	275	330	55	660	**13**	134	150	297
+15 mins.	65	**110**	13	**188**	18	136	**82**	**236**	282	396	**89**	767	6	139	161	306
+30 mins.	51	88	**14**	153	**31**	**143**	51	225	**350**	**401**	78	**829**	10	**163**	140	313
+45 mins.	54	99	8	161	22	122	48	192	344	317	68	729	13	154	**173**	**340**
Total Volume	237	396	43	676	81	529	238	848	1251	1444	290	2985	42	590	624	1256
% App. Total	35.1	58.6	6.4		9.6	62.4	28.1		41.9	48.4	9.7		3.3	47	49.7	
PHF	.884	.900	.768	.899	.653	.925	.726	.898	.894	.900	.815	.900	.808	.905	.902	.924

Counts Unlimited Inc.
PO Box 1178
Corona, CA 92878
(951) 268-6268

City of Riverside
N/S: Alessandro Boulevard
E/W: Arlington Avenue/Chicago Avenue
Weather: Sunny

File Name : RIVALARPM
Site Code : 11028035
Start Date : 2/9/2011
Page No : 1

Groups Printed- Total Volume

	Alessandro Boulevard Southbound				Chicago Avenue Westbound				Alessandro Boulevard Northbound				Arlington Avenue Eastbound				
Start Time	Left	Thru	Right	App. Total	Left	Thru	Right	App. Total	Left	Thru	Right	App. Total	Left	Thru	Right	App. Total	Int. Total
04:00 PM	76	264	10	350	67	142	63	272	136	132	13	281	3	110	224	337	1240
04:15 PM	91	279	9	379	76	129	66	271	157	134	21	312	7	113	222	342	1304
04:30 PM	80	251	3	334	72	140	52	264	167	140	18	325	11	132	268	411	1334
04:45 PM	91	349	5	445	105	146	63	314	174	163	29	366	12	131	256	399	1524
Total	338	1143	27	1508	320	557	244	1121	634	569	81	1284	33	486	970	1489	5402
05:00 PM	75	304	3	382	85	140	53	278	200	171	24	395	10	134	257	401	1456
05:15 PM	93	357	10	460	127	205	72	404	174	166	32	372	12	140	270	422	1658
05:30 PM	122	359	2	483	121	175	67	363	173	142	22	337	8	137	271	416	1599
05:45 PM	108	315	2	425	98	106	75	279	197	175	25	397	4	138	247	389	1490
Total	398	1335	17	1750	431	626	267	1324	744	654	103	1501	34	549	1045	1628	6203
Grand Total	736	2478	44	3258	751	1183	511	2445	1378	1223	184	2785	67	1035	2015	3117	11605
Apprch %	22.6	76.1	1.4		30.7	48.4	20.9		49.5	43.9	6.6		2.1	33.2	64.6		
Total %	6.3	21.4	0.4	28.1	6.5	10.2	4.4	21.1	11.9	10.5	1.6	24	0.6	8.9	17.4	26.9	

	Alessandro Boulevard Southbound				Chicago Avenue Westbound				Alessandro Boulevard Northbound				Arlington Avenue Eastbound				
Start Time	Left	Thru	Right	App. Total	Left	Thru	Right	App. Total	Left	Thru	Right	App. Total	Left	Thru	Right	App. Total	Int. Total
Peak Hour Analysis From 04:00 PM to 05:45 PM - Peak 1 of 1																	
Peak Hour for Entire Intersection Begins at 04:45 PM																	
04:45 PM	91	349	5	445	105	146	63	314	174	163	29	366	**12**	131	256	399	1524
05:00 PM	75	304	3	382	85	140	53	278	**200**	**171**	24	**395**	10	134	257	401	1456
05:15 PM	93	357	**10**	460	**127**	**205**	**72**	**404**	174	166	**32**	372	12	**140**	270	**422**	**1658**
05:30 PM	**122**	**359**	2	**483**	121	175	67	363	173	142	22	337	8	137	**271**	416	1599
Total Volume	381	1369	20	1770	438	666	255	1359	721	642	107	1470	42	542	1054	1638	6237
% App. Total	21.5	77.3	1.1		32.2	49	18.8		49	43.7	7.3		2.6	33.1	64.3		
PHF	.781	.953	.500	.916	.862	.812	.885	.841	.901	.939	.836	.930	.875	.968	.972	.970	.940

Counts Unlimited Inc.
PO Box 1178
Corona, CA 92878
(951) 268-6268

City of Riverside
N/S: Alessandro Boulevard
E/W: Arlington Avenue/Chicago Avenue
Weather: Sunny

File Name : RIVALARPM
Site Code : 11028035
Start Date : 2/9/2011
Page No : 2

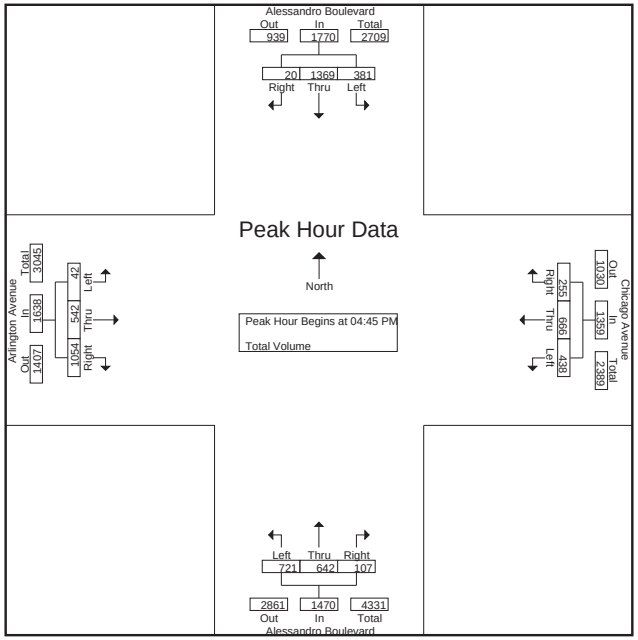

Peak Hour Analysis From 04:00 PM to 05:45 PM - Peak 1 of 1

Peak Hour for Each Approach Begins at:

	04:45 PM				04:45 PM				05:00 PM				04:45 PM			
0 mins.	91	349	5	445	105	146	63	314	**200**	171	24	395	**12**	131	256	399
15 mins.	75	304	3	382	85	140	53	278	174	166	**32**	372	10	134	257	401
30 mins.	93	357	**10**	460	**127**	**205**	**72**	**404**	173	142	22	337	12	**140**	270	**422**
45 mins.	**122**	**359**	2	**483**	121	175	67	363	197	**175**	25	**397**	8	137	**271**	416
Total Volume	381	1369	20	1770	438	666	255	1359	744	654	103	1501	42	542	1054	1638
% App. Total	21.5	77.3	1.1		32.2	49	18.8		49.6	43.6	6.9		2.6	33.1	64.3	
PHF	.781	.953	.500	.916	.862	.812	.885	.841	.930	.934	.805	.945	.875	.968	.972	.970

Counts Unlimited Inc.
PO Box 1178
Corona, CA 92878
(951) 268-6268

City of Riverside
N/S: Alessandro Boulevard
E/W: Overlook Pkwy/Canyon Crest Dr
Weather: Sunny

File Name : RIVALOLAM
Site Code : 11028035
Start Date : 2/10/2011
Page No : 1

Groups Printed- Total Volume

	Alessandro Boulevard Southbound				Canyon Crest Drive Westbound				Alessandro Boulevard Northbound				Overlook Parkway Eastbound				
Start Time	Left	Thru	Right	App. Total	Left	Thru	Right	App. Total	Left	Thru	Right	App. Total	Left	Thru	Right	App. Total	Int. Total
07:00 AM	5	215	1	221	64	8	22	94	0	670	172	842	2	2	0	4	1161
07:15 AM	2	216	2	220	72	7	23	102	2	751	237	990	6	2	3	11	1323
07:30 AM	9	260	0	269	71	0	24	95	1	764	229	994	10	2	2	14	1372
07:45 AM	9	247	5	261	56	1	16	73	3	665	219	887	3	2	1	6	1227
Total	25	938	8	971	263	16	85	364	6	2850	857	3713	21	8	6	35	5083
08:00 AM	21	304	4	329	46	0	22	68	1	556	175	732	3	3	2	8	1137
08:15 AM	14	269	2	285	35	2	30	67	2	533	171	706	5	3	3	11	1069
08:30 AM	16	258	0	274	48	3	23	74	1	423	130	554	4	4	0	8	910
08:45 AM	8	226	1	235	53	1	17	71	1	442	124	567	6	1	1	8	881
Total	59	1057	7	1123	182	6	92	280	5	1954	600	2559	18	11	6	35	3997
Grand Total	84	1995	15	2094	445	22	177	644	11	4804	1457	6272	39	19	12	70	9080
Apprch %	4	95.3	0.7		69.1	3.4	27.5		0.2	76.6	23.2		55.7	27.1	17.1		
Total %	0.9	22	0.2	23.1	4.9	0.2	1.9	7.1	0.1	52.9	16	69.1	0.4	0.2	0.1	0.8	

	Alessandro Boulevard Southbound				Canyon Crest Drive Westbound				Alessandro Boulevard Northbound				Overlook Parkway Eastbound				
Start Time	Left	Thru	Right	App. Total	Left	Thru	Right	App. Total	Left	Thru	Right	App. Total	Left	Thru	Right	App. Total	Int. Total
Peak Hour Analysis From 07:00 AM to 08:45 AM - Peak 1 of 1																	
Peak Hour for Entire Intersection Begins at 07:00 AM																	
07:00 AM	5	215	1	221	64	**8**	22	94	0	670	172	842	2	**2**	0	4	1161
07:15 AM	2	216	2	220	**72**	7	23	**102**	2	751	**237**	990	6	2	**3**	11	1323
07:30 AM	**9**	**260**	0	**269**	71	0	**24**	95	1	**764**	229	**994**	**10**	2	2	**14**	**1372**
07:45 AM	9	247	**5**	261	56	1	16	73	**3**	665	219	887	3	2	1	6	1227
Total Volume	25	938	8	971	263	16	85	364	6	2850	857	3713	21	8	6	35	5083
% App. Total	2.6	96.6	0.8		72.3	4.4	23.4		0.2	76.8	23.1		60	22.9	17.1		
PHF	.694	.902	.400	.902	.913	.500	.885	.892	.500	.933	.904	.934	.525	1.000	.500	.625	.926

Counts Unlimited Inc.
PO Box 1178
Corona, CA 92878
(951) 268-6268

City of Riverside
N/S: Alessandro Boulevard
E/W: Overlook Pkwy/Canyon Crest Dr
Weather: Sunny

File Name : RIVALOLAM
Site Code : 11028035
Start Date : 2/10/2011
Page No : 2

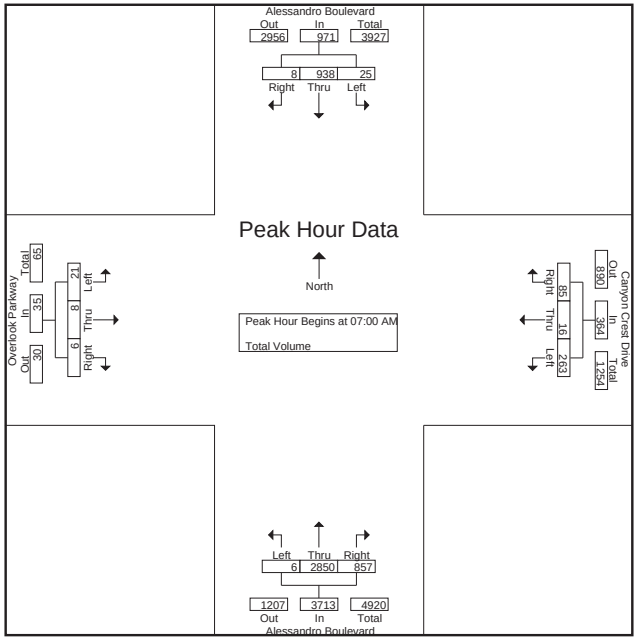

Peak Hour Analysis From 07:00 AM to 08:45 AM - Peak 1 of 1
Peak Hour for Each Approach Begins at:

	07:45 AM				07:00 AM				07:00 AM				07:15 AM			
+0 mins.	9	247	**5**	261	64	**8**	22	94	0	670	172	842	6	2	**3**	11
+15 mins.	**21**	**304**	4	**329**	**72**	7	23	**102**	2	751	**237**	990	**10**	2	2	**14**
+30 mins.	14	269	2	285	71	0	**24**	95	1	**764**	229	**994**	3	2	1	6
+45 mins.	16	258	0	274	56	1	16	73	**3**	665	219	887	3	**3**	2	8
Total Volume	60	1078	11	1149	263	16	85	364	6	2850	857	3713	22	9	8	39
% App. Total	5.2	93.8	1		72.3	4.4	23.4		0.2	76.8	23.1		56.4	23.1	20.5	
PHF	.714	.887	.550	.873	.913	.500	.885	.892	.500	.933	.904	.934	.550	.750	.667	.696

Counts Unlimited Inc.
PO Box 1178
Corona, CA 92878
(951) 268-6268

City of Riverside
N/S: Alessandro Boulevard
E/W: Overlook Pkwy/Canyon Crest Dr
Weather: Sunny

File Name : RIVALOLPM
Site Code : 11028035
Start Date : 2/10/2011
Page No : 1

Groups Printed- Total Volume

	Alessandro Boulevard Southbound				□anyon □rest □rive Westbound				Alessandro Boulevard Northbound				Overlook Park□ay Eastbound				
Start Time	Left	Thru	Right	App. Total	Left	Thru	Right	App. Total	Left	Thru	Right	App. Total	Left	Thru	Right	App. Total	Int. Total
04:00 PM	21	439	3	463	118	4	4	126	2	327	82	411	5	1	2	8	1008
04:15 PM	14	543	3	560	132	3	11	146	0	334	57	391	1	0	2	3	1100
04:30 PM	6	357	0	363	125	2	5	132	0	352	76	428	3	1	1	5	928
04:45 PM	10	380	3	393	158	5	14	177	0	348	92	440	3	0	1	4	1014
Total	51	1719	9	1779	533	14	34	581	2	1361	307	1670	12	2	6	20	4050
05:00 PM	13	655	6	674	162	7	11	180	1	333	89	423	1	2	4	7	1284
05:15 PM	25	800	2	827	142	3	9	154	1	389	95	485	2	3	3	8	1474
05:30 PM	20	677	5	702	168	5	11	184	2	295	94	391	2	0	2	4	1281
05:45 PM	14	649	3	666	141	1	10	152	0	334	88	422	1	2	4	7	1247
Total	72	2781	16	2869	613	16	41	670	4	1351	366	1721	6	7	13	26	5286
Grand Total	123	4500	25	4648	1146	30	75	1251	6	2712	673	3391	18	9	19	46	9336
Apprch %	2.6	96.8	0.5		91.6	2.4	6		0.2	80	19.8		39.1	19.6	41.3		
Total %	1.3	48.2	0.3	49.8	12.3	0.3	0.8	13.4	0.1	29	7.2	36.3	0.2	0.1	0.2	0.5	

	Alessandro Boulevard Southbound				□anyon □rest □rive Westbound				Alessandro Boulevard Northbound				Overlook Park□ay Eastbound				
Start Time	Left	Thru	Right	App. Total	Left	Thru	Right	App. Total	Left	Thru	Right	App. Total	Left	Thru	Right	App. Total	Int. Total
Peak Hour Analysis From 04:00 PM to 05:45 PM - Peak 1 of 1																	
Peak Hour for Entire Intersection Begins at 05:00 PM																	
05:00 PM	13	655	**6**	674	162	**7**	**11**	180	1	333	89	423	1	2	**4**	7	1284
05:15 PM	**25**	**800**	2	**827**	142	3	9	154	1	**389**	**95**	**485**	**2**	**3**	3	**8**	**1474**
05:30 PM	20	677	5	702	**168**	5	11	**184**	**2**	295	94	391	2	0	2	4	1281
05:45 PM	14	649	3	666	141	1	10	152	0	334	88	422	1	2	4	7	1247
Total Volume	72	2781	16	2869	613	16	41	670	4	1351	366	1721	6	7	13	26	5286
% App. Total	2.5	96.9	0.6		91.5	2.4	6.1		0.2	78.5	21.3		23.1	26.9	50		
PHF	.720	.869	.667	.867	.912	.571	.932	.910	.500	.868	.963	.887	.750	.583	.813	.813	.897

Counts Unlimited Inc.
PO Box 1178
Corona, CA 92878
(951) 268-6268

City of Riverside
N/S: Alessandro Boulevard
E/W: Overlook Pkwy/Canyon Crest Dr
Weather: Sunny

File Name : RIVALOLPM
Site Code : 11028035
Start Date : 2/10/2011
Page No : 2

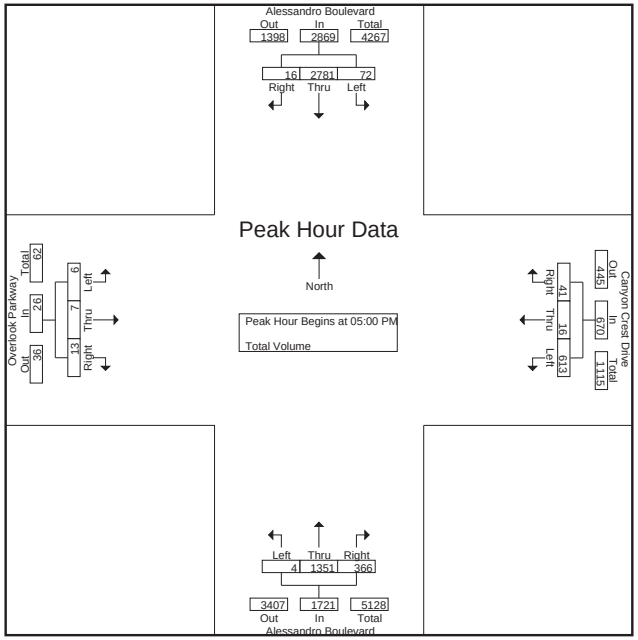

Peak Hour Analysis From 04:00 PM to 05:45 PM - Peak 1 of 1

Peak Hour for Each Approach Begins at:

	05:00 PM				04:45 PM				04:30 PM				05:00 PM			
0 mins.	13	655	**6**	674	158	5	**14**	177	0	352	76	428	1	2	**4**	7
15 mins.	**25**	**800**	2	**827**	162	**7**	11	180	0	348	92	440	**2**	**3**	3	**8**
30 mins.	20	677	5	702	142	3	9	154	**1**	333	89	423	2	0	2	4
45 mins.	14	649	3	666	**168**	5	11	**184**	1	**389**	**95**	**485**	1	2	4	7
Total Volume	72	2781	16	2869	630	20	45	695	2	1422	352	1776	6	7	13	26
% App. Total	2.5	96.9	0.6		90.6	2.9	6.5		0.1	80.1	19.8		23.1	26.9	50	
PHF	.720	.869	.667	.867	.938	.714	.804	.944	.500	.914	.926	.915	.750	.583	.813	.813

Counts Unlimited Inc.
PO Box 1178
Corona, CA 92878
(951) 268-6268

City of Riverside
N/S: Trautwein Road
E/W: Alessandro Boulevard
Weather: Sunny

File Name : RIVTRALAM
Site Code : 11028001
Start Date : 2/10/2011
Page No : 1

Groups Printed- Total Volume

	Alessandro Boulevard Westbound			Trautwein Road Northbound			Alessandro Boulevard Eastbound			
Start Time	Left	Thru	App. Total	Left	Right	App. Total	Thru	Right	App. Total	Int. Total
07:00 AM	25	412	437	444	32	476	171	141	312	1225
07:15 AM	20	484	504	514	30	544	167	160	327	1375
07:30 AM	27	505	532	489	34	523	206	130	336	1391
07:45 AM	26	436	462	421	52	473	197	110	307	1242
Total	98	1837	1935	1868	148	2016	741	541	1282	5233
08:00 AM	24	394	418	338	36	374	222	131	353	1145
08:15 AM	26	349	375	342	43	385	206	112	318	1078
08:30 AM	20	265	285	333	35	368	211	107	318	971
08:45 AM	47	253	300	245	27	272	183	103	286	858
Total	117	1261	1378	1258	141	1399	822	453	1275	4052
Grand Total	215	3098	3313	3126	289	3415	1563	994	2557	9285
Apprch %	6.5	93.5		91.5	8.5		61.1	38.9		
Total %	2.3	33.4	35.7	33.7	3.1	36.8	16.8	10.7	27.5	

	Alessandro Boulevard Westbound			Trautwein Road Northbound			Alessandro Boulevard Eastbound			
Start Time	Left	Thru	App. Total	Left	Right	App. Total	Thru	Right	App. Total	Int. Total
Peak Hour Analysis From 07:00 AM to 08:45 AM - Peak 1 of 1										
Peak Hour for Entire Intersection Begins at 07:00 AM										
07:00 AM	25	412	437	444	32	476	171	141	312	1225
07:15 AM	20	484	504	**514**	30	**544**	167	**160**	327	1375
07:30 AM	**27**	**505**	**532**	489	34	523	**206**	130	**336**	**1391**
07:45 AM	26	436	462	421	**52**	473	197	110	307	1242
Total Volume	98	1837	1935	1868	148	2016	741	541	1282	5233
% App. Total	5.1	94.9		92.7	7.3		57.8	42.2		
PHF	.907	.909	.909	.909	.712	.926	.899	.845	.954	.941

Counts Unlimited Inc.
PO Box 1178
Corona, CA 92878
(951) 268-6268

City of Riverside
N/S: Trautwein Road
E/W: Alessandro Boulevard
Weather: Sunny

File Name : RIVTRALAM
Site Code : 11028001
Start Date : 2/10/2011
Page No : 2

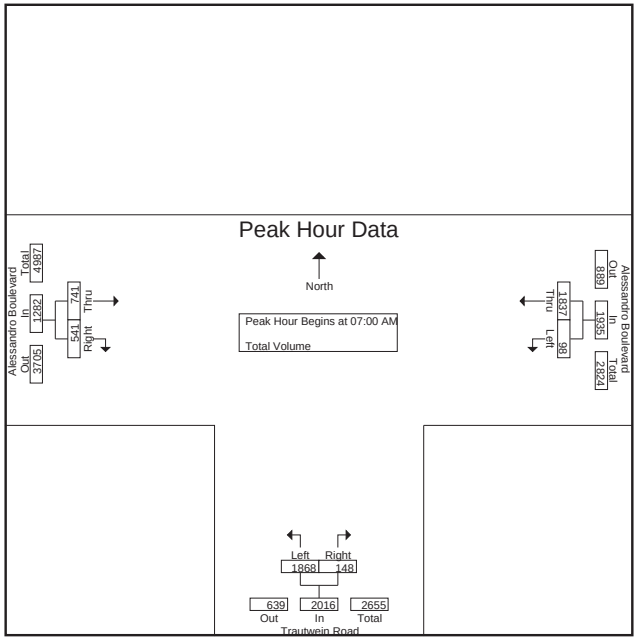

Peak Hour Analysis From 07:00 AM to 08:45 AM - Peak 1 of 1

Peak Hour for Each Approach Begins at:

	07:00 AM			07:00 AM			07:15 AM		
0 mins.	25	412	437	444	32	476	167	**160**	327
15 mins.	20	484	504	**514**	30	**544**	206	130	336
30 mins.	**27**	**505**	**532**	489	34	523	197	110	307
45 mins.	26	436	462	421	**52**	473	**222**	131	**353**
Total Volume	98	1837	1935	1868	148	2016	792	531	1323
% App. Total	5.1	94.9		92.7	7.3		59.9	40.1	
PHF	.907	.909	.909	.909	.712	.926	.892	.830	.937

Counts Unlimited Inc.
PO Box 1178
Corona, CA 92878
(951) 268-6268

City of Riverside
N/S: Trautwein Road
E/W: Alessandro Boulevard
Weather: Sunny

File Name : RIVTRALPM
Site Code : 11028001
Start Date : 2/10/2011
Page No : 1

Groups Printed- Total Volume

	Alessandro Boulevard Westbound			Trautwein Road Northbound			Alessandro Boulevard Eastbound			
Start Time	Left	Thru	App. Total	Left	Right	App. Total	Thru	Right	App. Total	Int. Total
04:00 PM	59	273	332	152	43	195	327	242	569	1096
04:15 PM	43	235	278	172	38	210	397	263	660	1148
04:30 PM	55	271	326	157	47	204	295	220	515	1045
04:45 PM	40	258	298	185	32	217	320	221	541	1056
Total	197	1037	1234	666	160	826	1339	946	2285	4345
05:00 PM	56	276	332	177	40	217	424	338	762	1311
05:15 PM	55	309	364	163	33	196	615	370	985	1545
05:30 PM	62	252	314	176	43	219	540	362	902	1435
05:45 PM	55	265	320	161	62	223	531	330	861	1404
Total	228	1102	1330	677	178	855	2110	1400	3510	5695
Grand Total	425	2139	2564	1343	338	1681	3449	2346	5795	10040
Apprch %	16.6	83.4		79.9	20.1		59.5	40.5		
Total %	4.2	21.3	25.5	13.4	3.4	16.7	34.4	23.4	57.7	

	Alessandro Boulevard Westbound			Trautwein Road Northbound			Alessandro Boulevard Eastbound			
Start Time	Left	Thru	App. Total	Left	Right	App. Total	Thru	Right	App. Total	Int. Total
Peak Hour Analysis From 04:00 PM to 05:30 PM - Peak 1 of 1										
Peak Hour for Entire Intersection Begins at 04:45 PM										
04:45 PM	40	258	298	**185**	32	217	320	221	541	1056
05:00 PM	56	276	332	177	40	217	424	338	762	1311
05:15 PM	55	**309**	**364**	163	33	196	**615**	**370**	**985**	**1545**
05:30 PM	**62**	252	314	176	**43**	**219**	540	362	902	1435
Total Volume	213	1095	1308	701	148	849	1899	1291	3190	5347
% App. Total	16.3	83.7		82.6	17.4		59.5	40.5		
PHF	.859	.886	.898	.947	.860	.969	.772	.872	.810	.865

Counts Unlimited Inc.
PO Box 1178
Corona, CA 92878
(951) 268-6268

City of Riverside
N/S: Trautwein Road
E/W: Alessandro Boulevard
Weather: Sunny

File Name : RIVTRALPM
Site Code : 11028001
Start Date : 2/10/2011
Page No : 2

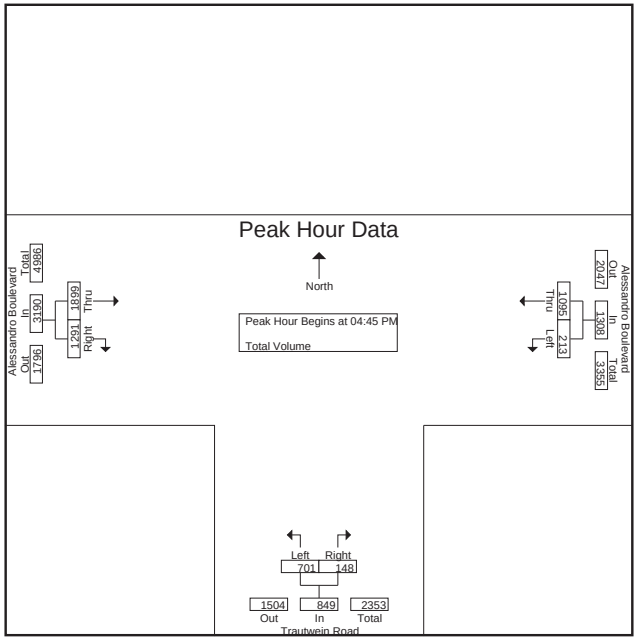

Peak Hour Analysis From 04:00 PM to 05:30 PM - Peak 1 of 1

Peak Hour for Each Approach Begins at:

	04:30 PM			04:45 PM			04:45 PM		
□0 mins.	55	271	326	**185**	32	217	320	221	541
□15 mins.	40	258	298	177	40	217	424	338	762
□30 mins.	**56**	276	332	163	33	196	**615**	**370**	**985**
□45 mins.	55	**309**	**364**	176	**43**	**219**	540	362	902
Total Volume	206	1114	1320	701	148	849	1899	1291	3190
% App. Total	15.6	84.4		82.6	17.4		59.5	40.5	
PHF	.920	.901	.907	.947	.860	.969	.772	.872	.810

Counts Unlimited Inc.
PO Box 1178
Corona, CA 92878
(951) 268-6268

City of Riverside
N/S: Crysyal View Terace/Magnon Court
E/W: Overlook Parkway
Weather: Sunny

File Name : RIVCVOLAM
Site Code : 11028022
Start Date : 2/9/2011
Page No : 1

Groups Printed- Total Volume

	Magnon □ourt Southbound				Overlook Park□ay Westbound				□rystal Vie□ Terrace Northbound				Overlook Park□ay Eastbound				
Start Time	Left	Thru	Right	App. Total	Left	Thru	Right	App. Total	Left	Thru	Right	App. Total	Left	Thru	Right	App. Total	Int. Total
07:00 AM	0	0	0	0	0	0	0	0	11	0	0	11	0	0	13	13	24
07:15 AM	0	0	0	0	0	0	0	0	24	0	0	24	0	0	17	17	41
07:30 AM	0	0	0	0	0	0	0	0	30	0	0	30	0	0	20	20	50
07:45 AM	0	0	0	0	0	0	0	0	18	0	0	18	0	0	18	18	36
Total	0	0	0	0	0	0	0	0	83	0	0	83	0	0	68	68	151
08:00 AM	0	0	0	0	0	0	0	0	18	0	0	18	0	0	18	18	36
08:15 AM	0	0	0	0	0	1	0	1	15	0	1	16	0	1	15	16	33
08:30 AM	0	0	0	0	0	0	0	0	21	0	0	21	0	0	14	14	35
08:45 AM	0	0	0	0	0	0	0	0	8	0	0	8	0	0	11	11	19
Total	0	0	0	0	0	1	0	1	62	0	1	63	0	1	58	59	123
Grand Total	0	0	0	0	0	1	0	1	145	0	1	146	0	1	126	127	274
Apprch %	0	0	0		0	100	0		99.3	0	0.7		0	0.8	99.2		
Total %	0	0	0	0	0	0.4	0	0.4	52.9	0	0.4	53.3	0	0.4	46	46.4	

	Magnon □ourt Southbound				Overlook Park□ay Westbound				□rystal Vie□ Terrace Northbound				Overlook Park□ay Eastbound				
Start Time	Left	Thru	Right	App. Total	Left	Thru	Right	App. Total	Left	Thru	Right	App. Total	Left	Thru	Right	App. Total	Int. Total
Peak Hour Analysis From 07:00 AM to 08:45 AM - Peak 1 of 1																	
Peak Hour for Entire Intersection Begins at 07:15 AM																	
07:15 AM	0	0	0	0	0	0	0	0	24	0	0	24	0	0	17	17	41
07:30 AM	0	0	0	0	0	0	0	0	**30**	0	0	**30**	0	0	**20**	**20**	**50**
07:45 AM	0	0	0	0	0	0	0	0	18	0	0	18	0	0	18	18	36
08:00 AM	0	0	0	0	0	0	0	0	18	0	0	18	0	0	18	18	36
Total Volume	0	0	0	0	0	0	0	0	90	0	0	90	0	0	73	73	163
% App. Total	0	0	0		0	0	0		100	0	0		0	0	100		
PHF	.000	.000	.000	.000	.000	.000	.000	.000	.750	.000	.000	.750	.000	.000	.913	.913	.815

Counts Unlimited Inc.
PO Box 1178
Corona, CA 92878
(951) 268-6268

City of Riverside
N/S: Crysyal View Terace/Magnon Court
E/W: Overlook Parkway
Weather: Sunny

File Name : RIVCVOLAM
Site Code : 11028022
Start Date : 2/9/2011
Page No : 2

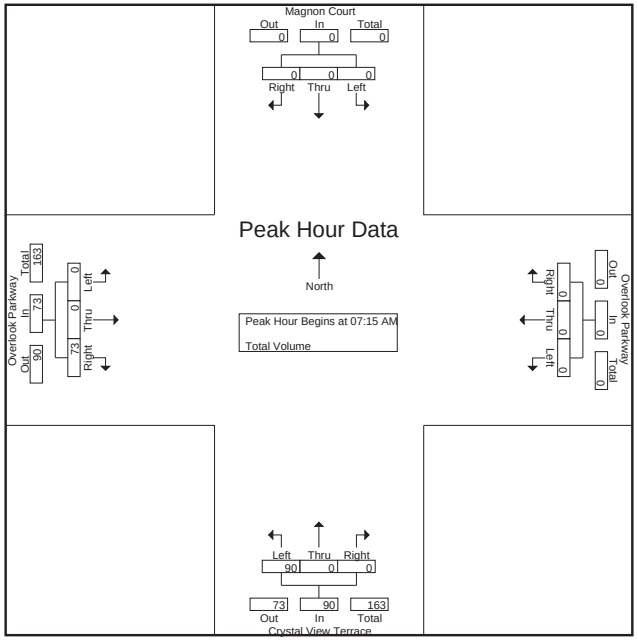

Peak Hour Analysis From 07:00 AM to 08:45 AM - Peak 1 of 1

Peak Hour for Each Approach Begins at:

	07:00 AM				07:30 AM				07:15 AM				07:15 AM			
+0 mins.	0	0	0	0	0	0	0	0	24	0	0	24	0	0	17	17
+15 mins.	0	0	0	0	0	0	0	0	**30**	0	0	**30**	0	0	**20**	**20**
+30 mins.	0	0	0	0	0	0	0	0	18	0	0	18	0	0	18	18
+45 mins.	0	0	0	0	0	**1**	0	**1**	18	0	0	18	0	0	18	18
Total Volume	0	0	0	0	0	1	0	1	90	0	0	90	0	0	73	73
% App. Total	0	0	0		0	100	0		100	0	0		0	0	100	
PHF	.000	.000	.000	.000	.000	.250	.000	.250	.750	.000	.000	.750	.000	.000	.913	.913

Counts Unlimited Inc.
PO Box 1178
Corona, CA 92878
(951) 268-6268

City of Riverside
N/S: Crystal View Terrace
E/W: Overlook Parkway/Magnon Court
Weather: Sunny

File Name : RIVCVOLPM
Site Code : 11028022
Start Date : 2/9/2011
Page No : 1

□roups Printe□□Total Volume

	Magnon □ourt □outh□oun□				□□erlook Park□a□ □ est□oun□				□r□sal Vie□ Terrace □orth□oun□				□□erlook Park□a□ East□oun□				
□tart Time	□eft	Thru	□ight	App. Total	□eft	Thru	□ight	App. Total	□eft	Thru	□ight	App. Total	□eft	Thru	□ight	App. Total	□ntTotal
04:00 PM	0	0	0	0	0	0	0	0	18	0	0	18	0	0	25	25	43
04:15 PM	0	0	0	0	0	0	0	0	12	0	0	12	0	0	1□	1□	28
04:30 PM	0	0	0	0	0	0	0	0	9	0	0	9	0	1	1□	17	2□
04:45 PM	0	1	0	1	0	0	0	0	18	0	0	18	1	0	18	19	38
Total	0	1	0	1	0	0	0	0	57	0	0	57	1	1	75	77	135
05:00 PM	0	0	0	0	0	0	0	0	14	0	0	14	0	0	25	25	39
05:15 PM	0	1	0	1	0	0	0	0	32	0	0	32	0	0	21	21	54
05:30 PM	0	0	0	0	0	0	0	0	19	0	0	19	0	0	23	23	42
05:45 PM	0	1	0	1	0	0	0	0	1□	0	0	1□	1	0	1□	17	34
Total	0	2	0	2	0	0	0	0	81	0	0	81	1	0	85	8□	1□9
□ran□Total	0	3	0	3	0	0	0	0	138	0	0	138	2	1	1□0	1□3	304
Apprch %	0	100	0		0	0	0		100	0	0		1.2	0.□	98.2		
Total %	0	1	0	1	0	0	0	0	45.4	0	0	45.4	0.7	0.3	52.□	53.□	

	Magnon □ourt □outh□oun□				□□erlook Park□a□ □ est□oun□				□r□sal Vie□ Terrace □orth□oun□				□□erlook Park□a□ East□oun□				
□tart Time	□eft	Thru	□ight	App. Total	□eft	Thru	□ight	App. Total	□eft	Thru	□ight	App. Total	□eft	Thru	□ight	App. Total	□ntTotal
Peak Hour Anal□sis From 04:00 PM to 05:45 PM □Peak 1 of 1																	
Peak Hour for Entire □ntersection Begins at 04:45 PM																	
04:45 PM	0	**1**	0	**1**	0	0	0	0	18	0	0	18	**1**	0	18	19	38
05:00 PM	0	0	0	0	0	0	0	0	14	0	0	14	0	0	**25**	**25**	39
05:15 PM	0	1	0	1	0	0	0	0	**32**	0	0	**32**	0	0	21	21	**54**
05:30 PM	0	0	0	0	0	0	0	0	19	0	0	19	0	0	23	23	42
Total Volume	0	2	0	2	0	0	0	0	83	0	0	83	1	0	87	88	173
% App. Total	0	100	0		0	0	0		100	0	0		1.1	0	98.9		
PHF	.000	.500	.000	.500	.000	.000	.000	.000	.□48	.000	.000	.□48	.250	.000	.870	.880	.801

Counts Unlimited Inc.
PO Box 1178
Corona, CA 92878
(951) 268-6268

City of Riverside
N/S: Crystal View Terrace
E/W: Overlook Parkway/Magnon Court
Weather: Sunny

File Name : RIVCVOLPM
Site Code : 11028022
Start Date : 2/9/2011
Page No : 2

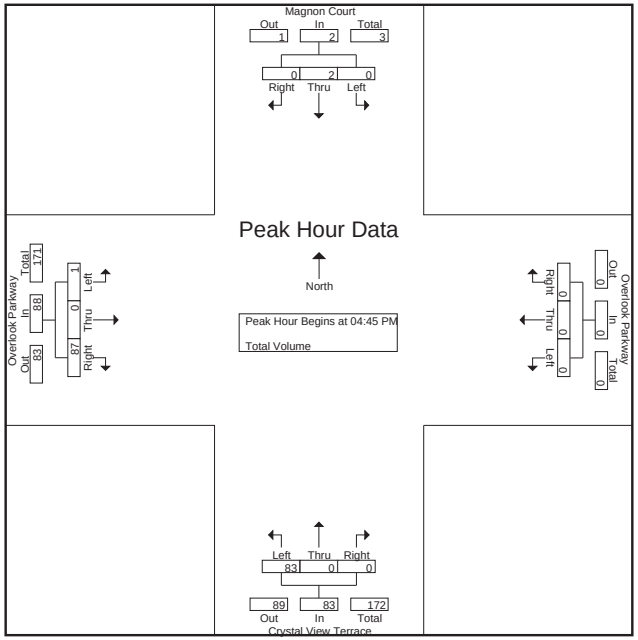

Peak Hour Analysis From 04:00 PM to 05:45 PM - Peak 1 of 1

Peak Hour for Each Approach Begins at:

	04:30 PM				04:00 PM				04:45 PM				04:45 PM			
+0 mins.	0	0	0	0	0	0	0	0	18	0	0	18	**1**	0	18	19
+15 mins.	0	**1**	0	**1**	0	0	0	0	14	0	0	14	0	0	**25**	**25**
+30 mins.	0	0	0	0	0	0	0	0	**32**	0	0	**32**	0	0	21	21
+45 mins.	0	1	0	1	0	0	0	0	19	0	0	19	0	0	23	23
Total Volume	0	2	0	2	0	0	0	0	83	0	0	83	1	0	87	88
% App. Total	0	100	0		0	0	0		100	0	0		1.1	0	98.9	
PHF	.000	.500	.000	.500	.000	.000	.000	.000	.□48	.000	.000	.□48	.250	.000	.870	.880

Counts Unlimited Inc.
PO Box 1178
Corona, CA 92878
(951) 268-6268

City of Riverside
N/S: Kingdom Drive
E/W: Overlook Parkway
Weather: Sunny

File Name : RIVKIOLAM
Site Code : 11028001
Start Date : 2/9/2011
Page No : 1

□roups Printe□□Total Volume

	□ing□om □ri□e □outh□oun□				□□erlook Park□a□ □ est□oun□				□ing□om □ri□e □orth□oun□				□□erlook Park□a□ East□oun□				
□tart Time	□eft	Thru	□ight	App. Total	□eft	Thru	□ight	App. Total	□eft	Thru	□ight	App. Total	□eft	Thru	□ight	App. Total	□ntTotal
07:00 AM	0	2	0	2	0	9	0	9	3	0	2	5	1	11	3	15	31
07:15 AM	0	0	0	0	3	20	0	23	□	0	3	9	0	12	4	1□	48
07:30 AM	0	0	0	0	2	20	0	22	4	0	3	7	0	12	5	17	4□
07:45 AM	0	0	0	0	0	25	0	25	14	0	5	19	0	1□	5	21	□5
Total	0	2	0	2	5	74	0	79	27	0	13	40	1	51	17	□9	190
08:00 AM	5	0	0	5	2	14	0	1□	10	0	5	15	0	10	4	14	50
08:15 AM	0	0	0	0	1	1□	0	17	□	0	2	8	0	15	1	1□	41
08:30 AM	0	0	0	0	2	1□	0	18	8	0	2	10	0	12	2	14	42
08:45 AM	0	1	0	1	□	7	2	15	3	0	1	4	0	12	3	15	35
Total	5	1	0	□	11	53	2	□□	27	0	10	37	0	49	10	59	1□8
□ran□Total	5	3	0	8	1□	127	2	145	54	0	23	77	1	100	27	128	358
Apprch %	□2.5	37.5	0		11	87.□	1.4		70.1	0	29.9		0.8	78.1	21.1		
Total %	1.4	0.8	0	2.2	4.5	35.5	0.□	40.5	15.1	0	□.4	21.5	0.3	27.9	7.5	35.8	

	□ing□om □ri□e □outh□oun□				□□erlook Park□a□ □ est□oun□				□ing□om □ri□e □orth□oun□				□□erlook Park□a□ East□oun□				
□tart Time	□eft	Thru	□ight	App. Total	□eft	Thru	□ight	App. Total	□eft	Thru	□ight	App. Total	□eft	Thru	□ight	App. Total	□ntTotal
Peak Hour Anal□sis From 07:00 AM to 08:45 AM □Peak 1 of 1																	
Peak Hour for Entire □intersection Begins at 07:15 AM																	
07:15 AM	0	0	0	0	**3**	20	0	23	□	0	3	9	0	12	4	1□	48
07:30 AM	0	0	0	0	2	20	0	22	4	0	3	7	0	12	**5**	17	4□
07:45 AM	0	0	0	0	0	**25**	0	**25**	**14**	0	**5**	**19**	0	**16**	5	**21**	**65**
08:00 AM	**5**	0	0	**5**	2	14	0	1□	10	0	5	15	0	10	4	14	50
Total Volume	5	0	0	5	7	79	0	8□	34	0	1□	50	0	50	18	□8	209
% App. Total	100	0	0		8.1	91.9	0		□8	0	32		0	73.5	2□.5		
PHF	.250	.000	.000	.250	.583	.790	.000	.8□0	.□07	.000	.800	.□58	.000	.781	.900	.810	.804

Counts Unlimited Inc.
PO Box 1178
Corona, CA 92878
(951) 268-6268

City of Riverside
N/S: Kingdom Drive
E/W: Overlook Parkway
Weather: Sunny

File Name : RIVKIOLAM
Site Code : 11028001
Start Date : 2/9/2011
Page No : 2

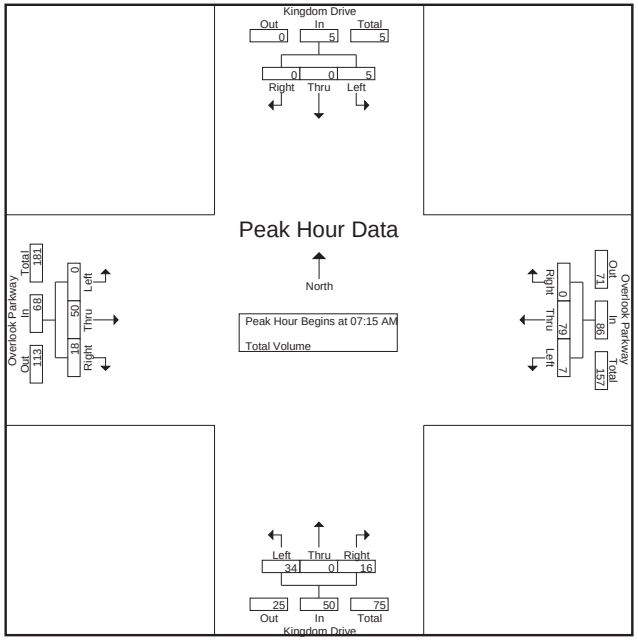

Peak Hour Analysis From 07:00 AM to 08:45 AM - Peak 1 of 1

Peak Hour for Each Approach Begins at:

	08:00 AM				07:15 AM				07:45 AM				07:00 AM			
+0 mins.	**5**	0	0	**5**	**3**	20	0	23	**14**	0	**5**	**19**	**1**	11	3	15
+15 mins.	0	0	0	0	2	20	0	22	10	0	5	15	0	12	4	1□
+30 mins.	0	0	0	0	0	**25**	0	**25**	□	0	2	8	0	12	**5**	17
+45 mins.	0	**1**	0	1	2	14	0	1□	8	0	2	10	0	**16**	5	**21**
Total Volume	5	1	0	□	7	79	0	8□	38	0	14	52	1	51	17	□9
% App. Total	83.3	1□.7	0		8.1	91.9	0		73.1	0	2□.9		1.4	73.9	24.□	
PHF	.250	.250	.000	.300	.583	.790	.000	.8□0	.□79	.000	.700	.□84	.250	.797	.850	.821

Counts Unlimited Inc.
PO Box 1178
Corona, CA 92878
(951) 268-6268

City of Riverside
N/S: Kingdom Drive
E/W: Overlook Parkway
Weather: Sunny

File Name : RIVKIOLPM
Site Code : 11028001
Start Date : 2/9/2011
Page No : 1

□roups Printe□□Total Volume

	□ing□om □ri□e □outh□oun□				□□erlook Park□a□ □ est□oun□				□ing□om □ri□e □orth□oun□				□□erlook Park□a□ East□oun□				
□tart Time	□eft	Thru	□ight	App. Total	□eft	Thru	□ight	App. Total	□eft	Thru	□ight	App. Total	□eft	Thru	□ight	App. Total	□ntTotal
04:00 PM	0	0	0	0	5	14	0	19	□	0	3	9	0	20	3	23	51
04:15 PM	1	0	0	1	0	10	0	10	3	0	2	5	0	1□	5	21	37
04:30 PM	0	0	0	0	2	8	1	11	8	0	1	9	0	1□	2	18	38
04:45 PM	0	0	0	0	4	11	0	15	□	0	3	9	0	15	4	19	43
Total	1	0	0	1	11	43	1	55	23	0	9	32	0	□7	14	81	1□9
05:00 PM	2	0	0	2	4	7	1	12	4	0	3	7	0	19	3	22	43
05:15 PM	0	0	0	0	5	27	1	33	2	0	0	2	0	24	9	33	□8
05:30 PM	0	0	0	0	3	23	0	2□	1	0	3	4	0	1□	□	22	52
05:45 PM	0	0	0	0	2	14	0	1□	4	0	1	5	0	17	□	23	44
Total	2	0	0	2	14	71	2	87	11	0	7	18	0	7□	24	100	207
□ran□Total	3	0	0	3	25	114	3	142	34	0	1□	50	0	143	38	181	37□
Apprch %	100	0	0		17.□	80.3	2.1		□8	0	32		0	79	21		
Total %	0.8	0	0	0.8	□.□	30.3	0.8	37.8	9	0	4.3	13.3	0	38	10.1	48.1	

	□ing□om □ri□e □outh□oun□				□□erlook Park□a□ □ est□oun□				□ing□om □ri□e □orth□oun□				□□erlook Park□a□ East□oun□				
□tart Time	□eft	Thru	□ight	App. Total	□eft	Thru	□ight	App. Total	□eft	Thru	□ight	App. Total	□eft	Thru	□ight	App. Total	□ntTotal
Peak Hour Anal□sis From 04:00 PM to 05:45 PM □Peak 1 of 1																	
Peak Hour for Entire □intersection Begins at 05:00 PM																	
05:00 PM	**2**	0	0	**2**	4	7	**1**	12	**4**	0	**3**	**7**	0	19	3	22	43
05:15 PM	0	0	0	0	**5**	**27**	1	**33**	2	0	0	2	0	**24**	**9**	**33**	**68**
05:30 PM	0	0	0	0	3	23	0	2□	1	0	3	4	0	1□	□	22	52
05:45 PM	0	0	0	0	2	14	0	1□	4	0	1	5	0	17	□	23	44
Total Volume	2	0	0	2	14	71	2	87	11	0	7	18	0	7□	24	100	207
% App. Total	100	0	0		1□.1	81.□	2.3		□1.1	0	38.9		0	7□	24		
PHF	.250	.000	.000	.250	.700	.□57	.500	.□59	.□88	.000	.583	.□43	.000	.792	.□□7	.758	.7□1

Counts Unlimited Inc.
PO Box 1178
Corona, CA 92878
(951) 268-6268

City of Riverside
N/S: Kingdom Drive
E/W: Overlook Parkway
Weather: Sunny

File Name : RIVKIOLPM
Site Code : 11028001
Start Date : 2/9/2011
Page No : 2

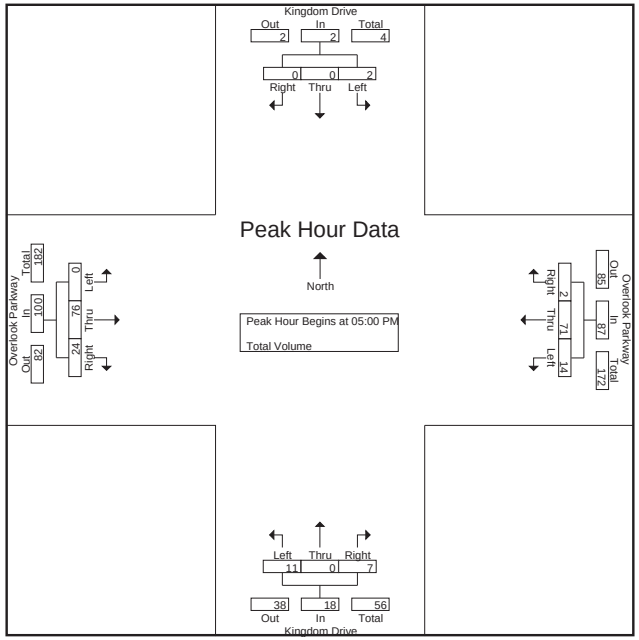

Peak Hour Analysis From 04:00 PM to 05:45 PM - Peak 1 of 1

Peak Hour for Each Approach Begins at:

	04:15 PM				05:00 PM				04:00 PM				05:00 PM			
+0 mins.	1	0	0	1	4	7	**1**	12	□	0	**3**	**9**	0	19	3	22
+15 mins.	0	0	0	0	**5**	**27**	1	**33**	3	0	2	5	0	**24**	**9**	**33**
+30 mins.	0	0	0	0	3	23	0	2□	**8**	0	1	9	0	1□	□	22
+45 mins.	**2**	0	0	**2**	2	14	0	1□	□	0	3	9	0	17	□	23
Total Volume	3	0	0	3	14	71	2	87	23	0	9	32	0	7□	24	100
% App. Total	100	0	0		1□.1	81.□	2.3		71.9	0	28.1		0	7□	24	
PHF	.375	.000	.000	.375	.700	.□57	.500	.□59	.719	.000	.750	.889	.000	.792	.□□7	.758

Counts Unlimited Inc.
PO Box 1178
Corona, CA 92878
(951) 268-6268

City of Riverside
N/S: Kingdom Drive
E/W: Green Orchard Place
Weather: Sunny

File Name : RIVKIGOAM
Site Code : 11028001
Start Date : 2/9/2011
Page No : 1

□roups Printe□□Total Volume

	□ing□om □ri□e □outh□oun□			□reen □rchar□Place □ est□oun□			□ing□om □ri□e □orth□oun□			
□tart Time	□eft	Thru	App. Total	□eft	□ight	App. Total	Thru	□ight	App. Total	□ntTotal
07:00 AM	□	0	□	0	3	3	2	2	4	13
07:15 AM	2	3	5	0	5	5	7	2	9	19
07:30 AM	3	4	7	0	3	3	3	2	5	15
07:45 AM	2	3	5	1	9	10	10	0	10	25
Total	13	10	23	1	20	21	22	□	28	72
08:00 AM	3	3	□	1	5	□	□	1	7	19
08:15 AM	1	1	2	0	5	5	□	2	8	15
08:30 AM	3	2	5	0	5	5	4	2	□	1□
08:45 AM	3	□	9	0	2	2	2	1	3	14
Total	10	12	22	1	17	18	18	□	24	□4
□ran□Total	23	22	45	2	37	39	40	12	52	13□
Apprch %	51.1	48.9		5.1	94.9		7□.9	23.1		
Total %	1□.9	1□.2	33.1	1.5	27.2	28.7	29.4	8.8	38.2	

	□ing□om □ri□e □outh□oun□			□reen □rchar□Place □ est□oun□			□ing□om □ri□e □orth□oun□			
□tart Time	□eft	Thru	App. Total	□eft	□ight	App. Total	Thru	□ight	App. Total	□ntTotal
Peak Hour Anal□sis From 07:00 AM to 08:45 AM □Peak 1 of 1										
Peak Hour for Entire □ntersection Begins at 07:15 AM										
07:15 AM	2	3	5	0	5	5	7	**2**	9	19
07:30 AM	**3**	**4**	**7**	0	3	3	3	2	5	15
07:45 AM	2	3	5	**1**	**9**	**10**	**10**	0	**10**	**25**
08:00 AM	3	3	□	1	5	□	□	1	7	19
Total Volume	10	13	23	2	22	24	2□	5	31	78
% App. Total	43.5	5□.5		8.3	91.7		83.9	1□.1		
PHF	.833	.813	.821	.500	.□11	.□00	.□50	.□25	.775	.780

Counts Unlimited Inc.
PO Box 1178
Corona, CA 92878
(951) 268-6268

City of Riverside
N/S: Kingdom Drive
E/W: Green Orchard Place
Weather: Sunny

File Name : RIVKIGOAM
Site Code : 11028001
Start Date : 2/9/2011
Page No : 2

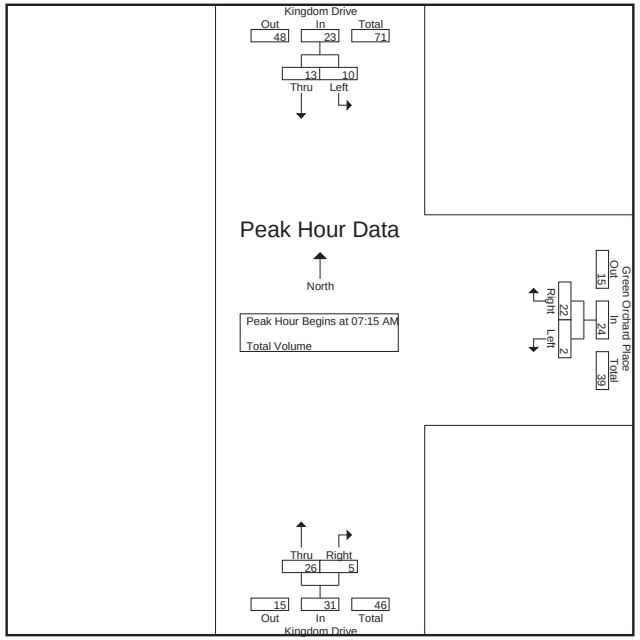

Peak Hour Analysis From 07:00 AM to 08:45 AM - Peak 1 of 1

Peak Hour for Each Approach Begins at:

	07:00 AM			07:45 AM			07:15 AM		
+0 mins.	**6**	0	□	**1**	**9**	**10**	7	**2**	9
+15 mins.	2	3	5	1	5	□	3	2	5
+30 mins.	3	**4**	**7**	0	5	5	**10**	0	**10**
+45 mins.	2	3	5	0	5	5	□	1	7
Total Volume	13	10	23	2	24	2□	2□	5	31
% App. Total	5□.5	43.5		7.7	92.3		83.9	1□.1	
PHF	.542	.□25	.821	.500	.□□7	.□50	.□50	.□25	.775

Counts Unlimited Inc.
PO Box 1178
Corona, CA 92878
(951) 268-6268

City of Riverside
N/S: Kingdom Drive
E/W: Green Orchard Place
Weather: Sunny

File Name : RIVKIGOPM
Site Code : 11028001
Start Date : 2/9/2011
Page No : 1

□roups Printe□□Total Volume

	□ing□om □ri□e □outh□oun□			□reen □rchar□Place □ est□oun□			□ing□om □ri□e □orth□oun□			
□tart Time	□eft	Thru	App. Total	□eft	□ight	App. Total	Thru	□ight	App. Total	□ntTotal
04:00 PM	5	3	8	2	7	9	2	2	4	21
04:15 PM	3	2	5	1	3	4	2	1	3	12
04:30 PM	0	4	4	1	2	3	7	1	8	15
04:45 PM	2	8	10	0	2	2	8	2	10	22
Total	10	17	27	4	14	18	19	□	25	70
05:00 PM	2	5	7	2	3	5	3	0	3	15
05:15 PM	□	8	14	0	2	2	0	1	1	17
05:30 PM	2	8	10	0	1	1	3	3	□	17
05:45 PM	3	4	7	4	1	5	5	3	8	20
Total	13	25	38	□	7	13	11	7	18	□9
□ran□Total	23	42	□5	10	21	31	30	13	43	139
Apprch %	35.4	□4.□		32.3	□7.7		□9.8	30.2		
Total %	1□.5	30.2	4□.8	7.2	15.1	22.3	21.□	9.4	30.9	

	□ing□om □ri□e □outh□oun□			□reen □rchar□Place □ est□oun□			□ing□om □ri□e □orth□oun□			
□tart Time	□eft	Thru	App. Total	□eft	□ight	App. Total	Thru	□ight	App. Total	□ntTotal
Peak Hour Anal□sis From 04:00 PM to 05:45 PM □Peak 1 of 1										
Peak Hour for Entire □ntersection Begins at 04:45 PM										
04:45 PM	2	**8**	10	0	2	2	**8**	2	**10**	**22**
05:00 PM	2	5	7	**2**	**3**	**5**	3	0	3	15
05:15 PM	**6**	8	**14**	0	2	2	0	1	1	17
05:30 PM	2	8	10	0	1	1	3	**3**	□	17
Total Volume	12	29	41	2	8	10	14	□	20	71
% App. Total	29.3	70.7		20	80		70	30		
PHF	.500	.90□	.732	.250	.□□7	.500	.438	.500	.500	.807

Counts Unlimited Inc.
PO Box 1178
Corona, CA 92878
(951) 268-6268

City of Riverside
N/S: Kingdom Drive
E/W: Green Orchard Place
Weather: Sunny

File Name : RIVKIGOPM
Site Code : 11028001
Start Date : 2/9/2011
Page No : 2

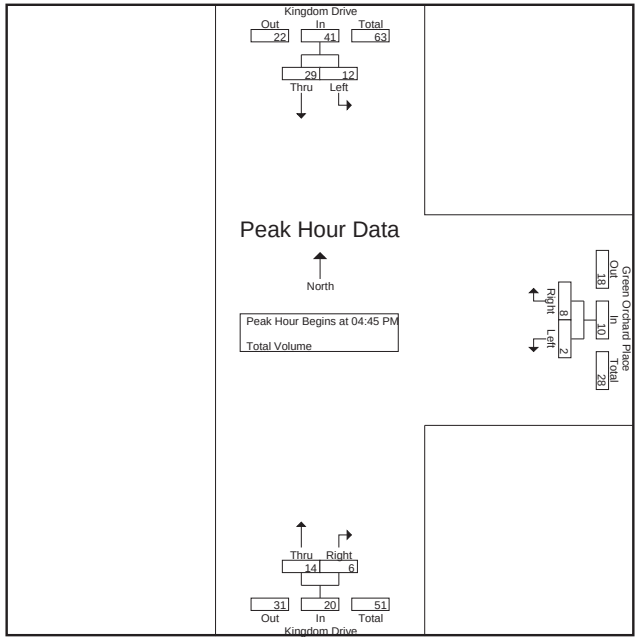

Peak Hour Analysis From 04:00 PM to 05:45 PM - Peak 1 of 1

Peak Hour for Each Approach Begins at:

	04:45 PM			04:00 PM			04:00 PM		
+0 mins.	2	**8**	10	**2**	**7**	**9**	2	**2**	4
+15 mins.	2	5	7	1	3	4	2	1	3
+30 mins.	**6**	8	**14**	1	2	3	7	1	8
+45 mins.	2	8	10	0	2	2	**8**	2	**10**
Total Volume	12	29	41	4	14	18	19	□	25
% App. Total	29.3	70.7		22.2	77.8		7□	24	
PHF	.500	.90□	.732	.500	.500	.500	.594	.750	.□25

Counts Unlimited Inc.
PO Box 1178
Corona, CA 92878
(951) 268-6268

City of Riverside
N/S: Trautwein Road
E/W: John Kennedy Drive.
Weather: Sunny

File Name : RIVTRJFKAM
Site Code : 11028022
Start Date : 2/8/2011
Page No : 1

Groups Printed- Total Volume

	Trautwein Road Southbound				John F Kennedy Drive Westbound				Trautwein Road Northbound				John F Kennedy Drive Eastbound				
Start Time	Left	Thru	Right	App. Total	Left	Thru	Right	App. Total	Left	Thru	Right	App. Total	Left	Thru	Right	App. Total	Int. Total
07:00 AM	3	197	94	294	36	12	12	60	12	421	3	436	104	19	25	148	938
07:15 AM	2	197	161	360	27	20	21	68	31	506	19	556	128	8	18	154	1138
07:30 AM	2	144	115	261	28	19	18	65	25	457	31	513	160	23	8	191	1030
07:45 AM	0	111	86	197	5	11	5	21	8	377	10	395	146	9	10	165	778
Total	7	649	456	1112	96	62	56	214	76	1761	63	1900	538	59	61	658	3884
08:00 AM	0	114	119	233	3	10	5	18	9	351	3	363	105	10	6	121	735
08:15 AM	2	117	158	277	4	5	7	16	6	295	3	304	154	14	8	176	773
08:30 AM	1	137	60	198	4	8	8	20	5	236	2	243	159	1	13	173	634
08:45 AM	0	135	35	170	1	1	11	13	2	238	3	243	103	3	5	111	537
Total	3	503	372	878	12	24	31	67	22	1120	11	1153	521	28	32	581	2679
Grand Total	10	1152	828	1990	108	86	87	281	98	2881	74	3053	1059	87	93	1239	6563
Apprch %	0.5	57.9	41.6		38.4	30.6	31		3.2	94.4	2.4		85.5	7	7.5		
Total %	0.2	17.6	12.6	30.3	1.6	1.3	1.3	4.3	1.5	43.9	1.1	46.5	16.1	1.3	1.4	18.9	

	Trautwein Road Southbound				John F Kennedy Drive Westbound				Trautwein Road Northbound				John F Kennedy Drive Eastbound				
Start Time	Left	Thru	Right	App. Total	Left	Thru	Right	App. Total	Left	Thru	Right	App. Total	Left	Thru	Right	App. Total	Int. Total
Peak Hour Analysis From 07:00 AM to 08:45 AM - Peak 1 of 1																	
Peak Hour for Entire Intersection Begins at 07:00 AM																	
07:00 AM	**3**	**197**	94	294	**36**	12	12	60	12	421	3	436	104	19	**25**	148	938
07:15 AM	2	197	**161**	**360**	27	**20**	**21**	**68**	**31**	**506**	19	**556**	128	8	18	154	**1138**
07:30 AM	2	144	115	261	28	19	18	65	25	457	**31**	513	**160**	**23**	8	**191**	1030
07:45 AM	0	111	86	197	5	11	5	21	8	377	10	395	146	9	10	165	778
Total Volume	7	649	456	1112	96	62	56	214	76	1761	63	1900	538	59	61	658	3884
% App. Total	0.6	58.4	41		44.9	29	26.2		4	92.7	3.3		81.8	9	9.3		
PHF	.583	.824	.708	.772	.667	.775	.667	.787	.613	.870	.508	.854	.841	.641	.610	.861	.853

Counts Unlimited Inc.
PO Box 1178
Corona, CA 92878
(951) 268-6268

City of Riverside
N/S: Trautwein Road
E/W: John Kennedy Drive.
Weather: Sunny

File Name : RIVTRJFKAM
Site Code : 11028022
Start Date : 2/8/2011
Page No : 2

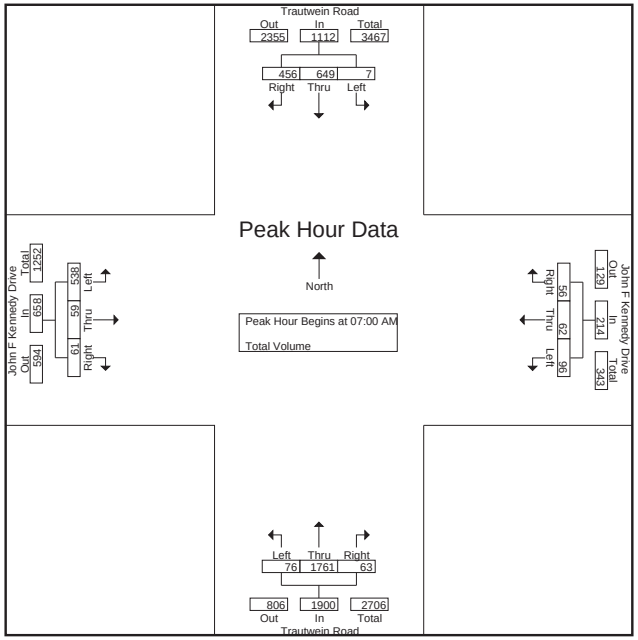

Peak Hour Analysis From 07:00 AM to 08:45 AM - Peak 1 of 1
Peak Hour for Each Approach Begins at:

	07:00 AM				07:00 AM				07:00 AM				07:00 AM			
+0 mins.	**3**	**197**	94	294	**36**	12	12	60	12	421	3	436	104	19	**25**	148
+15 mins.	2	197	**161**	**360**	27	**20**	**21**	**68**	**31**	**506**	19	**556**	128	8	18	154
+30 mins.	2	144	115	261	28	19	18	65	25	457	**31**	513	**160**	**23**	8	**191**
+45 mins.	0	111	86	197	5	11	5	21	8	377	10	395	146	9	10	165
Total Volume	7	649	456	1112	96	62	56	214	76	1761	63	1900	538	59	61	658
% App. Total	0.6	58.4	41		44.9	29	26.2		4	92.7	3.3		81.8	9	9.3	
PHF	.583	.824	.708	.772	.667	.775	.667	.787	.613	.870	.508	.854	.841	.641	.610	.861

Counts Unlimited Inc.
PO Box 1178
Corona, CA 92878
(951) 268-6268

City of Riverside
N/S: Trautwein Road
E/W: John F Kennedy Drive
Weather: Sunny

File Name : RIVTRJFKPM
Site Code : 11028022
Start Date : 2/8/2011
Page No : 1

□roups Printe□□Total Volume

	Traut□ein □oa□ □outh□oun□				□ohn F □enne□□□ri□e □ est□oun□				Traut□ein □oa□ □orth□oun□				□ohn F □enne□□□ri□e East□oun□				
□tart Time	□eft	Thru	□ight	App. Total	□eft	Thru	□ight	App. Total	□eft	Thru	□ight	App. Total	□eft	Thru	□ight	App. Total	□ntTotal
04:00 PM	□	277	95	378	7	□	2	15	7	182	□	195	82	1	11	94	□82
04:15 PM	9	319	99	427	2	3	3	8	15	191	7	213	□4	11	3	78	72□
04:30 PM	5	287	112	404	9	5	5	19	12	205	4	221	9□	7	8	111	755
04:45 PM	8	377	139	524	8	5	5	18	15	185	8	208	80	7	13	100	850
Total	28	12□0	445	1733	2□	19	15	□0	49	7□3	25	837	322	2□	35	383	3013
05:00 PM	3	317	117	437	7	8	5	20	14	210	7	231	78	8	8	94	782
05:15 PM	8	3□5	109	482	5	4	3	12	11	194	13	218	□4	5	18	87	799
05:30 PM	12	378	121	511	10	4	4	18	8	223	9	240	8□	8	19	113	882
05:45 PM	12	374	12□	512	8	11	7	2□	12	218	8	238	□2	3	22	87	8□3
Total	35	1434	473	1942	30	27	19	7□	45	845	37	927	290	24	□7	381	332□
□ran□Total	□3	2□94	918	3□75	5□	4□	34	13□	94	1□08	□2	17□4	□12	50	102	7□4	□339
Apprch %	1.7	73.3	25		41.2	33.8	25		5.3	91.2	3.5		80.1	□.5	13.4		
Total %	1	42.5	14.5	58	0.9	0.7	0.5	2.1	1.5	25.4	1	27.8	9.7	0.8	1.□	12.1	

	Traut□ein □oa□ □outh□oun□				□ohn F □enne□□□ri□e □ est□oun□				Traut□ein □oa□ □orth□oun□				□ohn F □enne□□□ri□e East□oun□				
□tart Time	□eft	Thru	□ight	App. Total	□eft	Thru	□ight	App. Total	□eft	Thru	□ight	App. Total	□eft	Thru	□ight	App. Total	□ntTotal
Peak Hour Anal□sis From 04:00 PM to 05:45 PM □Peak 1 of 1																	
Peak Hour for Entire □intersection Begins at 05:00 PM																	
05:00 PM	3	317	117	437	7	8	5	20	**14**	210	7	231	78	**8**	8	94	782
05:15 PM	8	3□5	109	482	5	4	3	12	11	194	**13**	218	□4	5	18	87	799
05:30 PM	**12**	**378**	121	511	**10**	4	4	18	8	**223**	9	**240**	**86**	8	19	**113**	**882**
05:45 PM	12	374	**126**	**512**	8	**11**	**7**	**26**	12	218	8	238	□2	3	**22**	87	8□3
Total Volume	35	1434	473	1942	30	27	19	7□	45	845	37	927	290	24	□7	381	332□
% App. Total	1.8	73.8	24.4		39.5	35.5	25		4.9	91.2	4		7□.1	□.3	17.□		
PHF	.729	.948	.938	.948	.750	.□14	.□79	.731	.804	.947	.712	.9□□	.843	.750	.7□1	.843	.943

Counts Unlimited Inc.
PO Box 1178
Corona, CA 92878
(951) 268-6268

City of Riverside
N/S: Trautwein Road
E/W: John F Kennedy Drive
Weather: Sunny

File Name : RIVTRJFKPM
Site Code : 11028022
Start Date : 2/8/2011
Page No : 2

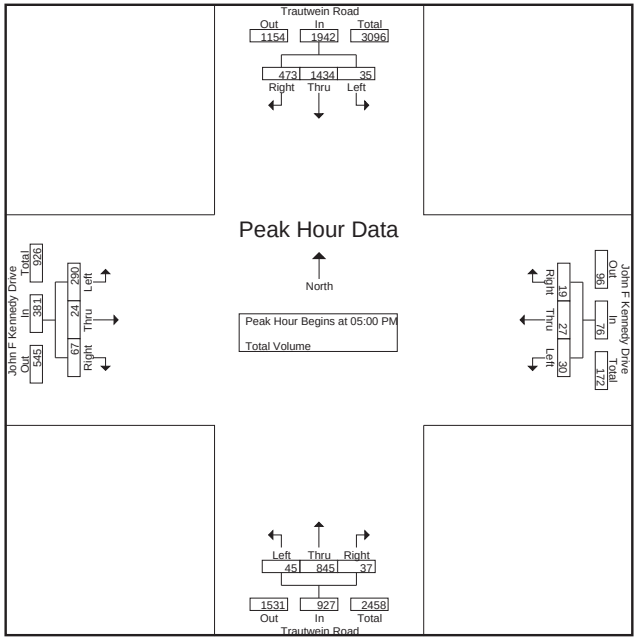

Peak Hour Analysis From 04:00 PM to 05:45 PM - Peak 1 of 1

Peak Hour for Each Approach Begins at:

	04:45 PM				05:00 PM				05:00 PM				04:45 PM			
+0 mins.	8	377	**139**	**524**	7	8	5	20	**14**	210	7	231	80	7	13	100
+15 mins.	3	317	117	437	5	4	3	12	11	194	**13**	218	78	**8**	8	94
+30 mins.	8	3□5	109	482	**10**	4	4	18	8	**223**	9	**240**	□4	5	18	87
+45 mins.	**12**	**378**	121	511	8	**11**	**7**	**26**	12	218	8	238	**86**	8	**19**	**113**
Total Volume	31	1437	48□	1954	30	27	19	7□	45	845	37	927	308	28	58	394
% App. Total	1.□	73.5	24.9		39.5	35.5	25		4.9	91.2	4		78.2	7.1	14.7	
PHF	.□4□	.950	.874	.932	.750	.□14	.□79	.731	.804	.947	.712	.9□□	.895	.875	.7□3	.872

Counts Unlimited Inc.
PO Box 1178
Corona, CA 92878
(951) 268-6268

City of Riverside
N/S: Washington Street
E/W: Bradley Street
Weather: Sunny

File Name : RIVWABRAM
Site Code : 11028131
Start Date : 2/10/2011
Page No : 1

Groups Printed- Total Volume

	Washington Street Southbound				Bradley Street Westbound				Washington Street Northbound				Bradley Street Eastbound				
Start Time	Left	Thru	Right	App. Total	Left	Thru	Right	App. Total	Left	Thru	Right	App. Total	Left	Thru	Right	App. Total	Int. Total
07:00 AM	5	53	0	58	6	11	39	56	39	176	0	215	0	3	16	19	348
07:15 AM	4	57	2	63	4	11	27	42	62	200	2	264	1	2	13	16	385
07:30 AM	4	56	3	63	5	20	31	56	77	242	4	323	2	2	13	17	459
07:45 AM	14	72	0	86	5	9	24	38	62	193	2	257	1	5	18	24	405
Total	27	238	5	270	20	51	121	192	240	811	8	1059	4	12	60	76	1597
08:00 AM	8	76	3	87	5	9	13	27	37	195	5	237	1	3	26	30	381
08:15 AM	11	63	1	75	2	6	17	25	49	134	4	187	1	7	25	33	320
08:30 AM	5	56	0	61	7	5	15	27	39	144	3	186	1	3	11	15	289
08:45 AM	7	49	1	57	1	8	18	27	40	126	3	169	0	5	11	16	269
Total	31	244	5	280	15	28	63	106	165	599	15	779	3	18	73	94	1259
Grand Total	58	482	10	550	35	79	184	298	405	1410	23	1838	7	30	133	170	2856
Apprch %	10.5	87.6	1.8		11.7	26.5	61.7		22	76.7	1.3		4.1	17.6	78.2		
Total %	2	16.9	0.4	19.3	1.2	2.8	6.4	10.4	14.2	49.4	0.8	64.4	0.2	1.1	4.7	6	

	Washington Street Southbound				Bradley Street Westbound				Washington Street Northbound				Bradley Street Eastbound				
Start Time	Left	Thru	Right	App. Total	Left	Thru	Right	App. Total	Left	Thru	Right	App. Total	Left	Thru	Right	App. Total	Int. Total
Peak Hour Analysis From 07:00 AM to 08:45 AM - Peak 1 of 1																	
Peak Hour for Entire Intersection Begins at 07:15 AM																	
07:15 AM	4	57	2	63	4	11	27	42	62	200	2	264	1	2	13	16	385
07:30 AM	4	56	**3**	63	**5**	**20**	**31**	**56**	**77**	**242**	4	**323**	**2**	2	13	17	**459**
07:45 AM	**14**	72	0	86	5	9	24	38	62	193	2	257	1	**5**	18	24	405
08:00 AM	8	**76**	3	**87**	5	9	13	27	37	195	**5**	237	1	3	**26**	**30**	381
Total Volume	30	261	8	299	19	49	95	163	238	830	13	1081	5	12	70	87	1630
% App. Total	10	87.3	2.7		11.7	30.1	58.3		22	76.8	1.2		5.7	13.8	80.5		
PHF	.536	.859	.667	.859	.950	.613	.766	.728	.773	.857	.650	.837	.625	.600	.673	.725	.888

Counts Unlimited Inc.
PO Box 1178
Corona, CA 92878
(951) 268-6268

City of Riverside
N/S: Washington Street
E/W: Bradley Street
Weather: Sunny

File Name : RIVWABRAM
Site Code : 11028131
Start Date : 2/10/2011
Page No : 2

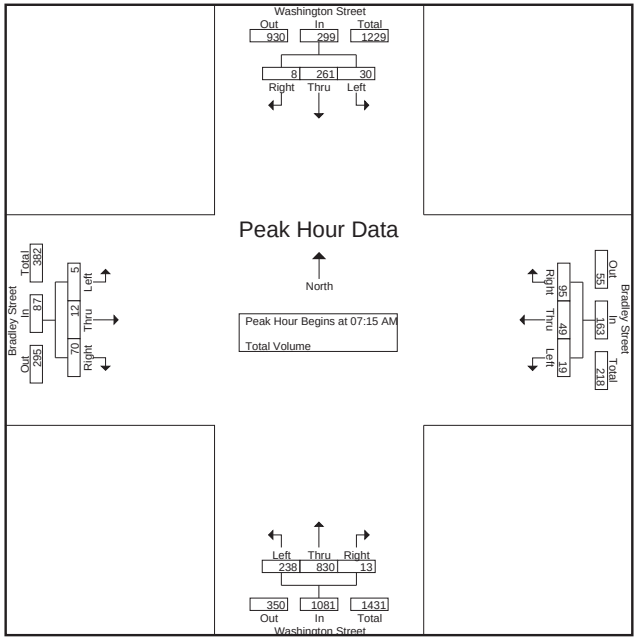

Peak Hour Analysis From 07:00 AM to 08:45 AM - Peak 1 of 1
Peak Hour for Each Approach Begins at:

	07:30 AM				07:00 AM				07:15 AM				07:30 AM			
+0 mins.	4	56	**3**	63	**6**	11	**39**	**56**	62	200	2	264	**2**	2	13	17
+15 mins.	**14**	72	0	86	4	11	27	42	**77**	**242**	4	**323**	1	5	18	24
+30 mins.	8	**76**	3	**87**	5	**20**	31	56	62	193	2	257	1	3	**26**	30
+45 mins.	11	63	1	75	5	9	24	38	37	195	**5**	237	1	**7**	25	**33**
Total Volume	37	267	7	311	20	51	121	192	238	830	13	1081	5	17	82	104
% App. Total	11.9	85.9	2.3		10.4	26.6	63		22	76.8	1.2		4.8	16.3	78.8	
PHF	.661	.878	.583	.894	.833	.638	.776	.857	.773	.857	.650	.837	.625	.607	.788	.788

Counts Unlimited Inc.
PO Box 1178
Corona, CA 92878
(951) 268-6268

City of Riverside
N/S: Washington Street
E/W: Bradley Street
Weather: Sunny

File Name : RIVWABRPM
Site Code : 11028001
Start Date : 2/8/2011
Page No : 1

□roups Printe□□Total Volume

	□ ashington □treet □outh□oun□				Bra□le□□treet □ est□oun□				□ ashington □treet □orth□oun□				Bra□le□□treet East□oun□				
□tart Time	□eft	Thru	□ight	App. Total	□eft	Thru	□ight	App. Total	□eft	Thru	□ight	App. Total	□eft	Thru	□ight	App. Total	□ntTotal
04:00 PM	14	145	1	1□0	3	5	11	19	20	94	3	117	1	□	□9	7□	372
04:15 PM	14	128	2	144	5	5	17	27	27	80	□	113	0	10	4□	5□	340
04:30 PM	17	145	1	1□3	0	3	13	1□	15	□□	5	8□	0	10	41	51	31□
04:45 PM	19	1□1	0	180	3	5	10	18	17	8□	5	108	0	8	42	50	35□
Total	□4	579	4	□47	11	18	51	80	79	32□	19	424	1	34	198	233	1384
05:00 PM	18	149	0	1□7	2	9	□	17	22	8□	□	114	2	8	74	84	382
05:15 PM	20	172	0	192	3	4	11	18	17	102	0	119	1	9	□8	78	407
05:30 PM	19	13□	1	15□	7	2	9	18	24	82	5	111	1	7	□2	70	355
05:45 PM	1□	155	1	172	5	3	15	23	25	70	5	100	1	8	41	50	345
Total	73	□12	2	□87	17	18	41	7□	88	340	1□	444	5	32	245	282	1489
□ran□Total	137	1191	□	1334	28	3□	92	15□	1□7	□□□	35	8□8	□	□□	443	515	2873
Apprch %	10.3	89.3	0.4		17.9	23.1	59		19.2	7□.7	4		1.2	12.8	8□		
Total %	4.8	41.5	0.2	4□.4	1	1.3	3.2	5.4	5.8	23.2	1.2	30.2	0.2	2.3	15.4	17.9	

	□ ashington □treet □outh□oun□				Bra□le□□treet □ est□oun□				□ ashington □treet □orth□oun□				Bra□le□□treet East□oun□				
□tart Time	□eft	Thru	□ight	App. Total	□eft	Thru	□ight	App. Total	□eft	Thru	□ight	App. Total	□eft	Thru	□ight	App. Total	□ntTotal
Peak Hour Anal□sis From 04:00 PM to 05:45 PM □Peak 1 of 1																	
Peak Hour for Entire □ntersection Begins at 04:45 PM																	
04:45 PM	19	1□1	0	180	3	5	10	**18**	17	8□	5	108	0	8	42	50	35□
05:00 PM	18	149	0	1□7	2	**9**	□	17	22	8□	**6**	114	**2**	8	**74**	**84**	382
05:15 PM	**20**	**172**	0	**192**	3	4	**11**	18	17	**102**	0	**119**	1	**9**	□8	78	**407**
05:30 PM	19	13□	**1**	15□	**7**	2	9	18	**24**	82	5	111	1	7	□2	70	355
Total Volume	7□	□18	1	□95	15	20	3□	71	80	35□	1□	452	4	32	24□	282	1500
% App. Total	10.9	88.9	0.1		21.1	28.2	50.7		17.7	78.8	3.5		1.4	11.3	87.2		
PHF	.950	.898	.250	.905	.53□	.55□	.818	.98□	.833	.873	.□□7	.950	.500	.889	.831	.839	.921

Counts Unlimited Inc.
PO Box 1178
Corona, CA 92878
(951) 268-6268

City of Riverside
N/S: Washington Street
E/W: Bradley Street
Weather: Sunny

File Name : RIVWABRPM
Site Code : 11028001
Start Date : 2/8/2011
Page No : 2

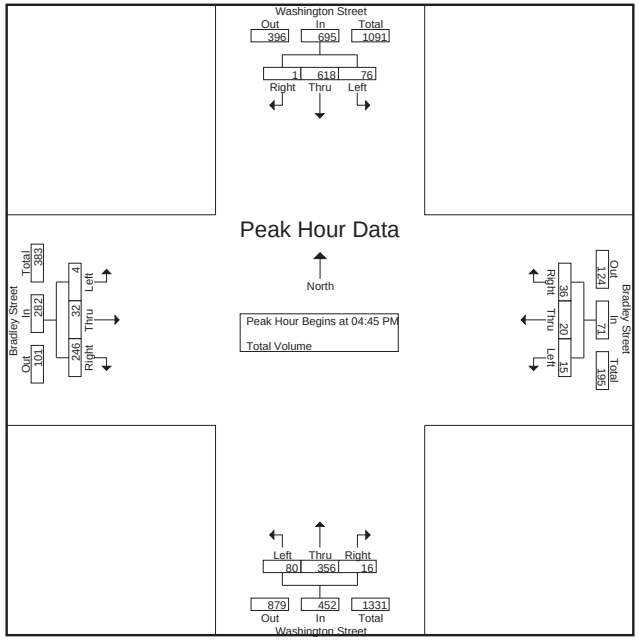

Peak Hour Analysis From 04:00 PM to 05:45 PM - Peak 1 of 1

Peak Hour for Each Approach Begins at:

	04:30 PM				04:00 PM				04:45 PM				04:45 PM			
+0 mins.	17	145	**1**	1□3	3	**5**	11	19	17	8□	5	108	0	8	42	50
+15 mins.	19	1□1	0	180	**5**	5	**17**	**27**	22	8□	**6**	114	**2**	8	**74**	**84**
+30 mins.	18	149	0	1□7	0	3	13	1□	17	**102**	0	**119**	1	**9**	□8	78
+45 mins.	**20**	**172**	0	**192**	3	5	10	18	**24**	82	5	111	1	7	□2	70
Total Volume	74	□27	1	702	11	18	51	80	80	35□	1□	452	4	32	24□	282
% App. Total	10.5	89.3	0.1		13.8	22.5	□3.8		17.7	78.8	3.5		1.4	11.3	87.2	
PHF	.925	.911	.250	.914	.550	.900	.750	.741	.833	.873	.□□7	.950	.500	.889	.831	.839

Counts Unlimited Inc.
PO Box 1178
Corona, CA 92878
(951) 268-6268

City of Riverside
N/S: Alessandro Boulevard
E/W: Via Vista Drive
Weather: Sunny

File Name : RIVALVVAM
Site Code : 11028066
Start Date : 2/10/2011
Page No : 1

Groups Printed- Total Volume

	Alessandro Boulevard Southbound				Via Vista Drive Westbound				Alessandro Boulevard Northbound				Via Vista Drive Eastbound				
Start Time	Left	Thru	Right	App. Total	Left	Thru	Right	App. Total	Left	Thru	Right	App. Total	Left	Thru	Right	App. Total	Int. Total
07:00 AM	5	203	7	215	2	2	20	24	8	691	3	702	29	7	5	41	982
07:15 AM	5	224	11	240	7	1	23	31	10	768	3	781	40	10	9	59	1111
07:30 AM	3	251	7	261	5	4	33	42	8	784	3	795	39	16	6	61	1159
07:45 AM	8	255	14	277	5	14	25	44	14	669	3	686	47	14	19	80	1087
Total	21	933	39	993	19	21	101	141	40	2912	12	2964	155	47	39	241	4339
08:00 AM	9	312	21	342	1	19	16	36	28	533	1	562	27	10	18	55	995
08:15 AM	9	239	22	270	3	13	21	37	39	559	7	605	42	23	34	99	1011
08:30 AM	10	242	14	266	2	6	18	26	6	458	0	464	39	10	27	76	832
08:45 AM	5	222	7	234	3	1	15	19	3	440	2	445	22	9	8	39	737
Total	33	1015	64	1112	9	39	70	118	76	1990	10	2076	130	52	87	269	3575
Grand Total	54	1948	103	2105	28	60	171	259	116	4902	22	5040	285	99	126	510	7914
Apprch %	2.6	92.5	4.9		10.8	23.2	66		2.3	97.3	0.4		55.9	19.4	24.7		
Total %	0.7	24.6	1.3	26.6	0.4	0.8	2.2	3.3	1.5	61.9	0.3	63.7	3.6	1.3	1.6	6.4	

	Alessandro Boulevard Southbound				Via Vista Drive Westbound				Alessandro Boulevard Northbound				Via Vista Drive Eastbound				
Start Time	Left	Thru	Right	App. Total	Left	Thru	Right	App. Total	Left	Thru	Right	App. Total	Left	Thru	Right	App. Total	Int. Total
Peak Hour Analysis From 07:00 AM to 08:45 AM - Peak 1 of 1																	
Peak Hour for Entire Intersection Begins at 07:15 AM																	
07:15 AM	5	224	11	240	**7**	1	23	31	10	768	**3**	781	40	10	9	59	1111
07:30 AM	3	251	7	261	5	4	**33**	42	8	**784**	3	**795**	39	**16**	6	61	**1159**
07:45 AM	8	255	14	277	5	14	25	**44**	14	669	3	686	**47**	14	**19**	**80**	1087
08:00 AM	**9**	**312**	**21**	**342**	1	**19**	16	36	**28**	533	1	562	27	10	18	55	995
Total Volume	25	1042	53	1120	18	38	97	153	60	2754	10	2824	153	50	52	255	4352
% App. Total	2.2	93	4.7		11.8	24.8	63.4		2.1	97.5	0.4		60	19.6	20.4		
PHF	.694	.835	.631	.819	.643	.500	.735	.869	.536	.878	.833	.888	.814	.781	.684	.797	.939

Counts Unlimited Inc.
PO Box 1178
Corona, CA 92878
(951) 268-6268

City of Riverside
N/S: Alessandro Boulevard
E/W: Via Vista Drive
Weather: Sunny

File Name : RIVALVVAM
Site Code : 11028066
Start Date : 2/10/2011
Page No : 2

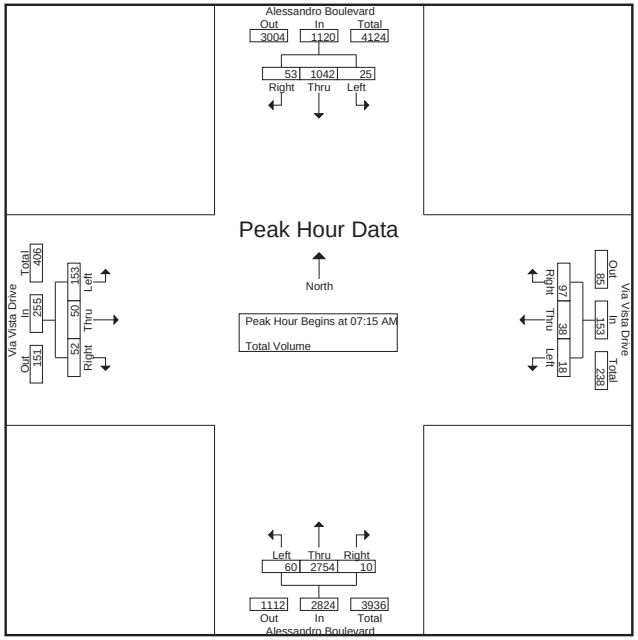

Peak Hour Analysis From 07:00 AM to 08:45 AM - Peak 1 of 1
Peak Hour for Each Approach Begins at:

	07:45 AM				07:30 AM				07:00 AM				07:45 AM			
+0 mins.	8	255	14	277	**5**	4	**33**	42	8	691	**3**	702	**47**	14	19	80
+15 mins.	9	**312**	21	**342**	5	14	25	**44**	10	768	3	781	27	10	18	55
+30 mins.	9	239	**22**	270	1	**19**	16	36	8	**784**	3	**795**	42	**23**	**34**	**99**
+45 mins.	**10**	242	14	266	3	13	21	37	**14**	669	3	686	39	10	27	76
Total Volume	36	1048	71	1155	14	50	95	159	40	2912	12	2964	155	57	98	310
% App. Total	3.1	90.7	6.1		8.8	31.4	59.7		1.3	98.2	0.4		50	18.4	31.6	
PHF	.900	.840	.807	.844	.700	.658	.720	.903	.714	.929	1.000	.932	.824	.620	.721	.783

Counts Unlimited Inc.
PO Box 1178
Corona, CA 92878
(951) 268-6268

City of Riverside
N/S: Alessandro Boulevard
E/W: Via Vista Drive
Weather: Sunny

File Name : RIVALVVPM
Site Code : 11028066
Start Date : 2/10/2011
Page No : 1

Groups Printed- Total Volume

	Alessandro Boulevard Southbound				Via Vista Drive Westbound				Alessandro Boulevard Northbound				Via Vista Drive Eastbound				
Start Time	Left	Thru	Right	App. Total	Left	Thru	Right	App. Total	Left	Thru	Right	App. Total	Left	Thru	Right	App. Total	Int. Total
04:00 PM	13	492	13	518	3	4	17	24	19	487	8	514	19	6	8	33	1089
04:15 PM	27	543	27	597	4	7	9	20	7	303	5	315	13	7	5	25	957
04:30 PM	13	332	10	355	3	9	14	26	15	353	7	375	11	7	12	30	786
04:45 PM	10	378	6	394	3	10	2	15	8	361	4	373	19	11	12	42	824
Total	63	1745	56	1864	13	30	42	85	49	1504	24	1577	62	31	37	130	3656
05:00 PM	8	692	36	736	8	8	10	26	13	339	6	358	8	7	13	28	1148
05:15 PM	24	834	38	896	4	9	10	23	19	364	4	387	15	5	22	42	1348
05:30 PM	20	703	19	742	2	8	18	28	8	332	2	342	8	7	10	25	1137
05:45 PM	29	649	17	695	3	6	12	21	8	339	2	349	13	6	11	30	1095
Total	81	2878	110	3069	17	31	50	98	48	1374	14	1436	44	25	56	125	4728
Grand Total	144	4623	166	4933	30	61	92	183	97	2878	38	3013	106	56	93	255	8384
Apprch %	2.9	93.7	3.4		16.4	33.3	50.3		3.2	95.5	1.3		41.6	22	36.5		
Total %	1.7	55.1	2	58.8	0.4	0.7	1.1	2.2	1.2	34.3	0.5	35.9	1.3	0.7	1.1	3	

	Alessandro Boulevard Southbound				Via Vista Drive Westbound				Alessandro Boulevard Northbound				Via Vista Drive Eastbound				
Start Time	Left	Thru	Right	App. Total	Left	Thru	Right	App. Total	Left	Thru	Right	App. Total	Left	Thru	Right	App. Total	Int. Total
Peak Hour Analysis From 04:00 PM to 05:45 PM - Peak 1 of 1																	
Peak Hour for Entire Intersection Begins at 05:00 PM																	
05:00 PM	8	692	36	736	**8**	8	10	26	13	339	**6**	358	8	**7**	13	28	1148
05:15 PM	24	**834**	**38**	**896**	4	**9**	10	23	**19**	**364**	4	**387**	**15**	5	**22**	**42**	**1348**
05:30 PM	20	703	19	742	2	8	**18**	**28**	8	332	2	342	8	7	10	25	1137
05:45 PM	**29**	649	17	695	3	6	12	21	8	339	2	349	13	6	11	30	1095
Total Volume	81	2878	110	3069	17	31	50	98	48	1374	14	1436	44	25	56	125	4728
% App. Total	2.6	93.8	3.6		17.3	31.6	51		3.3	95.7	1		35.2	20	44.8		
PHF	.698	.863	.724	.856	.531	.861	.694	.875	.632	.944	.583	.928	.733	.893	.636	.744	.877

Counts Unlimited Inc.
PO Box 1178
Corona, CA 92878
(951) 268-6268

City of Riverside
N/S: Alessandro Boulevard
E/W: Via Vista Drive
Weather: Sunny

File Name : RIVALVVPM
Site Code : 11028066
Start Date : 2/10/2011
Page No : 2

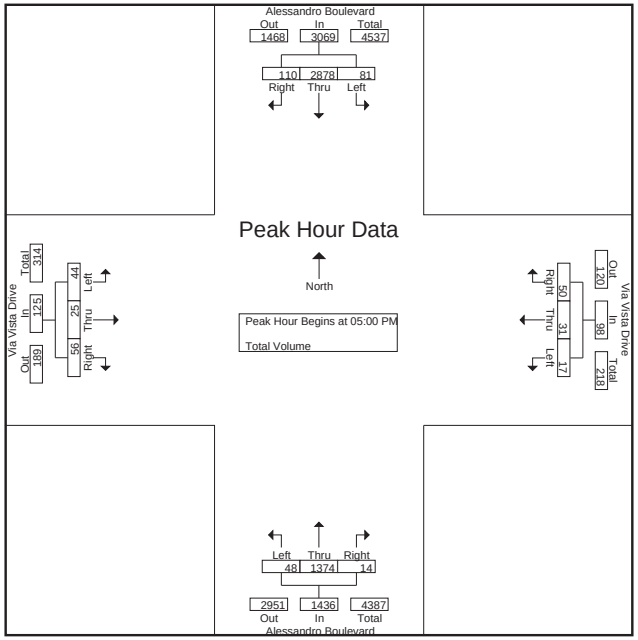

Peak Hour Analysis From 04:00 PM to 05:45 PM - Peak 1 of 1

Peak Hour for Each Approach Begins at:

	05:00 PM				05:00 PM				04:00 PM				04:30 PM			
0 mins.	8	692	36	736	**8**	8	10	26	**19**	**487**	**8**	**514**	11	7	12	30
15 mins.	24	**834**	**38**	**896**	4	**9**	10	23	7	303	5	315	**19**	**11**	12	**42**
30 mins.	20	703	19	742	2	8	**18**	**28**	15	353	7	375	8	7	13	28
45 mins.	**29**	649	17	695	3	6	12	21	8	361	4	373	15	5	**22**	42
Total Volume	81	2878	110	3069	17	31	50	98	49	1504	24	1577	53	30	59	142
% App. Total	2.6	93.8	3.6		17.3	31.6	51		3.1	95.4	1.5		37.3	21.1	41.5	
PHF	.698	.863	.724	.856	.531	.861	.694	.875	.645	.772	.750	.767	.697	.682	.670	.845

Counts Unlimited Inc.
PO Box 1178
Corona, CA 92878
(951) 268-6268

City of Riverside
N/S: Mary Street
E/W: Victoria Avenue
Weather: Sunny

File Name : RIVMYVIAM
Site Code : 11028099
Start Date : 2/8/2011
Page No : 1

Groups Printed- Total Volume

	Mary Avenue Southbound				Victoria Avenue Westbound				Mary Avenue Northbound				Victoria Avenue Eastbound				
Start Time	Left	Thru	Right	App. Total	Left	Thru	Right	App. Total	Left	Thru	Right	App. Total	Left	Thru	Right	App. Total	Int. Total
07:00 AM	7	14	12	33	15	47	7	69	8	35	16	59	47	65	1	113	274
07:15 AM	16	8	15	39	15	60	26	101	2	32	39	73	96	82	0	178	391
07:30 AM	11	15	14	40	12	66	29	107	7	31	34	72	92	75	0	167	386
07:45 AM	11	17	16	44	11	70	33	114	3	30	24	57	78	52	0	130	345
Total	45	54	57	156	53	243	95	391	20	128	113	261	313	274	1	588	1396
08:00 AM	10	17	17	44	11	67	28	106	6	26	3	35	43	51	0	94	279
08:15 AM	9	14	18	41	7	39	12	58	3	55	5	63	78	40	2	120	282
08:30 AM	7	17	16	40	4	41	9	54	6	32	12	50	37	52	5	94	238
08:45 AM	9	15	11	35	8	28	9	45	2	33	14	49	43	66	2	111	240
Total	35	63	62	160	30	175	58	263	17	146	34	197	201	209	9	419	1039
Grand Total	80	117	119	316	83	418	153	654	37	274	147	458	514	483	10	1007	2435
Apprch %	25.3	37	37.7		12.7	63.9	23.4		8.1	59.8	32.1		51	48	1		
Total %	3.3	4.8	4.9	13	3.4	17.2	6.3	26.9	1.5	11.3	6	18.8	21.1	19.8	0.4	41.4	

	Mary Avenue Southbound				Victoria Avenue Westbound				Mary Avenue Northbound				Victoria Avenue Eastbound				
Start Time	Left	Thru	Right	App. Total	Left	Thru	Right	App. Total	Left	Thru	Right	App. Total	Left	Thru	Right	App. Total	Int. Total
Peak Hour Analysis From 07:00 AM to 08:45 AM - Peak 1 of 1																	
Peak Hour for Entire Intersection Begins at 07:15 AM																	
07:15 AM	**16**	8	15	39	**15**	60	26	101	2	**32**	**39**	**73**	**96**	**82**	0	**178**	**391**
07:30 AM	11	15	14	40	12	66	29	107	**7**	31	34	72	92	75	0	167	386
07:45 AM	11	**17**	16	**44**	11	**70**	**33**	**114**	3	30	24	57	78	52	0	130	345
08:00 AM	10	17	**17**	44	11	67	28	106	6	26	3	35	43	51	0	94	279
Total Volume	48	57	62	167	49	263	116	428	18	119	100	237	309	260	0	569	1401
% App. Total	28.7	34.1	37.1		11.4	61.4	27.1		7.6	50.2	42.2		54.3	45.7	0		
PHF	.750	.838	.912	.949	.817	.939	.879	.939	.643	.930	.641	.812	.805	.793	.000	.799	.896

Counts Unlimited Inc.
PO Box 1178
Corona, CA 92878
(951) 268-6268

City of Riverside
N/S: Mary Street
E/W: Victoria Avenue
Weather: Sunny

File Name : RIVMYVIAM
Site Code : 11028099
Start Date : 2/8/2011
Page No : 2

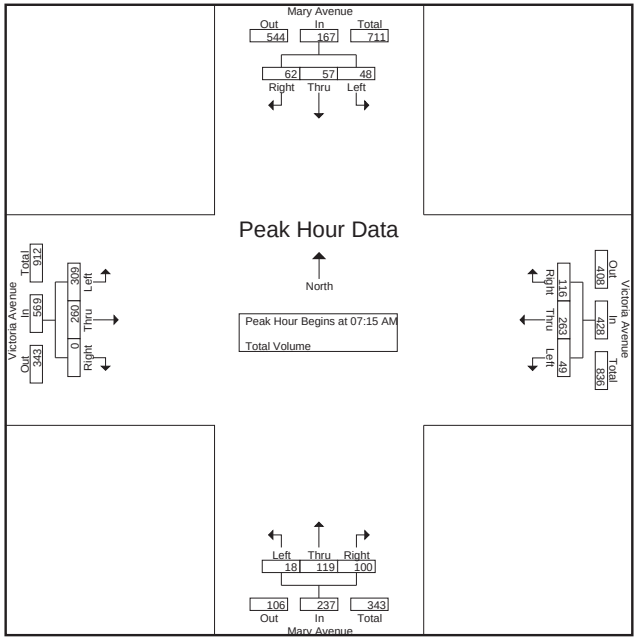

Peak Hour Analysis From 07:00 AM to 08:45 AM - Peak 1 of 1
Peak Hour for Each Approach Begins at:

	07:30 AM				07:15 AM				07:00 AM				07:00 AM			
+0 mins.	**11**	15	14	40	**15**	60	26	101	**8**	**35**	16	59	47	65	**1**	113
+15 mins.	11	**17**	16	**44**	12	66	29	107	2	32	**39**	**73**	**96**	**82**	0	**178**
+30 mins.	10	17	17	44	11	**70**	**33**	**114**	7	31	34	72	92	75	0	167
+45 mins.	9	14	**18**	41	11	67	28	106	3	30	24	57	78	52	0	130
Total Volume	41	63	65	169	49	263	116	428	20	128	113	261	313	274	1	588
% App. Total	24.3	37.3	38.5		11.4	61.4	27.1		7.7	49	43.3		53.2	46.6	0.2	
PHF	.932	.926	.903	.960	.817	.939	.879	.939	.625	.914	.724	.894	.815	.835	.250	.826

Counts Unlimited Inc.
PO Box 1178
Corona, CA 92878
(951) 268-6268

City of Riverside
N/S: Mary Street
E/W: Victoria Avenue
Weather: Sunny

File Name : RIVMYVIPM
Site Code : 11028099
Start Date : 2/8/2011
Page No : 1

Groups Printed- Total Volume

	Mary Street Southbound				Victoria Avenue Westbound				Mary Street Northbound				Victoria Avenue Eastbound				
Start Time	Left	Thru	Right	App. Total	Left	Thru	Right	App. Total	Left	Thru	Right	App. Total	Left	Thru	Right	App. Total	Int. Total
04:00 PM	17	27	43	87	14	68	8	90	2	28	11	41	27	70	5	102	320
04:15 PM	19	38	47	104	16	55	8	79	2	26	5	33	25	58	4	87	303
04:30 PM	22	40	42	104	14	55	8	77	0	21	8	29	27	64	6	97	307
04:45 PM	12	32	45	89	26	82	10	118	4	21	15	40	22	58	2	82	329
Total	70	137	177	384	70	260	34	364	8	96	39	143	101	250	17	368	1259
05:00 PM	20	37	52	109	32	56	11	99	0	20	15	35	17	60	6	83	326
05:15 PM	21	37	69	127	22	77	11	110	1	30	11	42	26	59	5	90	369
05:30 PM	17	52	54	123	27	66	12	105	2	17	12	31	25	62	5	92	351
05:45 PM	17	38	55	110	22	79	13	114	7	26	9	42	16	64	4	84	350
Total	75	164	230	469	103	278	47	428	10	93	47	150	84	245	20	349	1396
Grand Total	145	301	407	853	173	538	81	792	18	189	86	293	185	495	37	717	2655
Apprch %	17	35.3	47.7		21.8	67.9	10.2		6.1	64.5	29.4		25.8	69	5.2		
Total %	5.5	11.3	15.3	32.1	6.5	20.3	3.1	29.8	0.7	7.1	3.2	11	7	18.6	1.4	27	

	Mary Street Southbound				Victoria Avenue Westbound				Mary Street Northbound				Victoria Avenue Eastbound				
Start Time	Left	Thru	Right	App. Total	Left	Thru	Right	App. Total	Left	Thru	Right	App. Total	Left	Thru	Right	App. Total	Int. Total
Peak Hour Analysis From 04:00 PM to 05:45 PM - Peak 1 of 1																	
Peak Hour for Entire Intersection Begins at 05:00 PM																	
05:00 PM	20	37	52	109	**32**	56	11	99	0	20	**15**	35	17	60	**6**	83	326
05:15 PM	**21**	37	**69**	**127**	22	77	11	110	1	**30**	11	**42**	**26**	59	5	90	**369**
05:30 PM	17	**52**	54	123	27	66	12	105	2	17	12	31	25	62	5	**92**	351
05:45 PM	17	38	55	110	22	**79**	**13**	**114**	**7**	26	9	42	16	**64**	4	84	350
Total Volume	75	164	230	469	103	278	47	428	10	93	47	150	84	245	20	349	1396
% App. Total	16	35	49		24.1	65	11		6.7	62	31.3		24.1	70.2	5.7		
PHF	.893	.788	.833	.923	.805	.880	.904	.939	.357	.775	.783	.893	.808	.957	.833	.948	.946

Counts Unlimited Inc.
PO Box 1178
Corona, CA 92878
(951) 268-6268

City of Riverside
N/S: Mary Street
E/W: Victoria Avenue
Weather: Sunny

File Name : RIVMYVIPM
Site Code : 11028099
Start Date : 2/8/2011
Page No : 2

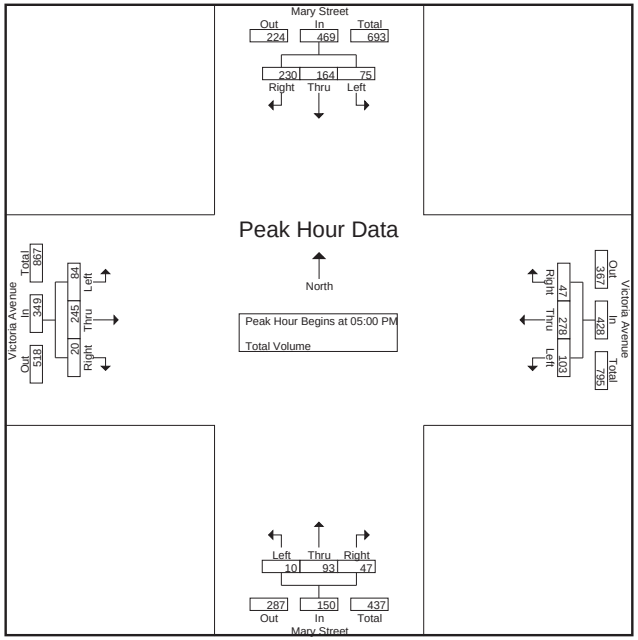

Peak Hour Analysis From 04:00 PM to 05:45 PM - Peak 1 of 1

Peak Hour for Each Approach Begins at:

	05:00 PM				04:45 PM				05:00 PM				04:00 PM			
0 mins.	20	37	52	109	26	**82**	10	**118**	0	20	**15**	35	**27**	**70**	5	**102**
15 mins.	**21**	37	**69**	**127**	**32**	56	11	99	1	**30**	11	**42**	25	58	4	87
30 mins.	17	**52**	54	123	22	77	11	110	2	17	12	31	27	64	**6**	97
45 mins.	17	38	55	110	27	66	**12**	105	**7**	26	9	42	22	58	2	82
Total Volume	75	164	230	469	107	281	44	432	10	93	47	150	101	250	17	368
% App. Total	16	35	49		24.8	65	10.2		6.7	62	31.3		27.4	67.9	4.6	
PHF	.893	.788	.833	.923	.836	.857	.917	.915	.357	.775	.783	.893	.935	.893	.708	.902

Counts Unlimited Inc.
PO Box 1178
Corona, CA 92878
(951) 268-6268

City of Riverside
N/S: Mary Street
E/W: Hawarden Drive
Weather: Sunny

File Name : RIVMAHAAM
Site Code : 11028981
Start Date : 2/9/2011
Page No : 1

Groups Printed- Total Volume

	Mary Street Southbound			Hawarden Drive Northbound			Hawarden Drive Eastbound			
Start Time	Thru	Right	App. Total	Left	Thru	App. Total	Left	Right	App. Total	Int. Total
07:00 AM	10	2	12	0	23	23	15	0	15	50
07:15 AM	4	8	12	1	30	31	27	0	27	70
07:30 AM	12	8	20	0	49	49	40	0	40	109
07:45 AM	19	7	26	0	41	41	22	0	22	89
Total	45	25	70	1	143	144	104	0	104	318
08:00 AM	18	7	25	1	27	28	17	1	18	71
08:15 AM	13	5	18	0	31	31	17	2	19	68
08:30 AM	10	9	19	0	11	11	11	1	12	42
08:45 AM	6	4	10	0	15	15	5	1	6	31
Total	47	25	72	1	84	85	50	5	55	212
Grand Total	92	50	142	2	227	229	154	5	159	530
Apprch %	64.8	35.2		0.9	99.1		96.9	3.1		
Total %	17.4	9.4	26.8	0.4	42.8	43.2	29.1	0.9	30	

	Mary Street Southbound			Hawarden Drive Northbound			Hawarden Drive Eastbound			
Start Time	Thru	Right	App. Total	Left	Thru	App. Total	Left	Right	App. Total	Int. Total
Peak Hour Analysis From 07:00 AM to 08:45 AM - Peak 1 of 1										
Peak Hour for Entire Intersection Begins at 07:15 AM										
07:15 AM	4	**8**	12	**1**	30	31	27	0	27	70
07:30 AM	12	8	20	0	**49**	**49**	**40**	0	**40**	**109**
07:45 AM	**19**	7	**26**	0	41	41	22	0	22	89
08:00 AM	18	7	25	1	27	28	17	**1**	18	71
Total Volume	53	30	83	2	147	149	106	1	107	339
% App. Total	63.9	36.1		1.3	98.7		99.1	0.9		
PHF	.697	.938	.798	.500	.750	.760	.663	.250	.669	.778

Counts Unlimited Inc.
PO Box 1178
Corona, CA 92878
(951) 268-6268

City of Riverside
N/S: Mary Street
E/W: Hawarden Drive
Weather: Sunny

File Name : RIVMAHAAM
Site Code : 11028981
Start Date : 2/9/2011
Page No : 2

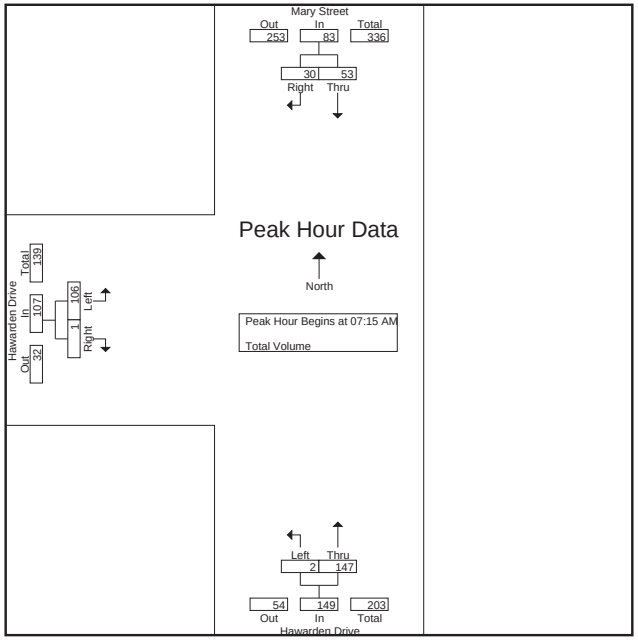

Peak Hour Analysis From 07:00 AM to 08:45 AM - Peak 1 of 1
Peak Hour for Each Approach Begins at:

	07:30 AM			07:15 AM			07:15 AM		
+0 mins.	12	**8**	20	**1**	30	31	27	0	27
+15 mins.	**19**	7	**26**	0	**49**	**49**	**40**	0	**40**
+30 mins.	18	7	25	0	41	41	22	0	22
+45 mins.	13	5	18	1	27	28	17	**1**	18
Total Volume	62	27	89	2	147	149	106	1	107
% App. Total	69.7	30.3		1.3	98.7		99.1	0.9	
PHF	.816	.844	.856	.500	.750	.760	.663	.250	.669

Counts Unlimited Inc.
PO Box 1178
Corona, CA 92878
(951) 268-6268

City of Riverside
N/S: Mary Street
E/W: Hawarden Drive
Weather: Sunny

File Name : RIVMAHAPM
Site Code : 11028981
Start Date : 2/9/2011
Page No : 1

Groups Printed- Total Volume

	Southbound			Ha□arden Drive Northbound			Ha□arden Drive Eastbound			
Start Time	Thru	Right	App. Total	Left	Thru	App. Total	Left	Right	App. Total	Int. Total
04:00 PM	11	11	22	0	4	4	7	0	7	33
04:15 PM	9	16	25	2	8	10	6	0	6	41
04:30 PM	22	17	39	0	15	15	6	1	7	61
04:45 PM	24	16	40	1	8	9	10	1	11	60
Total	66	60	126	3	35	38	29	2	31	195
05:00 PM	33	17	50	1	6	7	8	2	10	67
05:15 PM	27	23	50	0	8	8	12	2	14	72
05:30 PM	31	24	55	1	12	13	5	1	6	74
05:45 PM	20	14	34	0	14	14	8	0	8	56
Total	111	78	189	2	40	42	33	5	38	269
Grand Total	177	138	315	5	75	80	62	7	69	464
Apprch %	56.2	43.8		6.2	93.8		89.9	10.1		
Total %	38.1	29.7	67.9	1.1	16.2	17.2	13.4	1.5	14.9	

	Southbound			Ha□arden Drive Northbound			Ha□arden Drive Eastbound			
Start Time	Thru	Right	App. Total	Left	Thru	App. Total	Left	Right	App. Total	Int. Total
Peak Hour Analysis From 04:00 PM to 05:45 PM - Peak 1 of 1										
Peak Hour for Entire Intersection Begins at 04:45 PM										
04:45 PM	24	16	40	**1**	8	9	10	1	11	60
05:00 PM	**33**	17	50	1	6	7	8	**2**	10	67
05:15 PM	27	23	50	0	8	8	**12**	2	**14**	72
05:30 PM	31	**24**	**55**	1	**12**	**13**	5	1	6	**74**
Total Volume	115	80	195	3	34	37	35	6	41	273
% App. Total	59	41		8.1	91.9		85.4	14.6		
PHF	.871	.833	.886	.750	.708	.712	.729	.750	.732	.922

Counts Unlimited Inc.
PO Box 1178
Corona, CA 92878
(951) 268-6268

City of Riverside
N/S: Mary Street
E/W: Hawarden Drive
Weather: Sunny

File Name : RIVMAHAPM
Site Code : 11028981
Start Date : 2/9/2011
Page No : 2

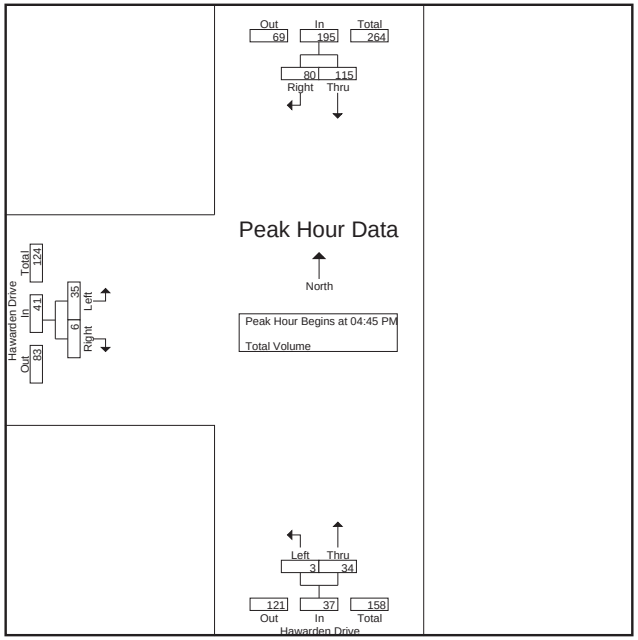

Peak Hour Analysis From 04:00 PM to 05:45 PM - Peak 1 of 1

Peak Hour for Each Approach Begins at:

	04:45 PM			05:00 PM			04:30 PM		
0 mins.	24	16	40	**1**	6	7	6	1	7
15 mins.	**33**	17	50	0	8	8	10	1	11
30 mins.	27	23	50	1	12	13	8	**2**	10
45 mins.	31	**24**	**55**	0	**14**	**14**	**12**	2	**14**
Total Volume	115	80	195	2	40	42	36	6	42
% App. Total	59	41		4.8	95.2		85.7	14.3	
PHF	.871	.833	.886	.500	.714	.750	.750	.750	.750

Counts Unlimited Inc.
PO Box 1178
Corona, CA 92878
(951) 268-6268

City of Riverside
N/S: Hawarden Drive
E/W: Overlook Parkway
Weather: Sunny

File Name : RIVHAOLAM
Site Code : 11028098
Start Date : 2/9/2011
Page No : 1

Groups Printed- Total Volume

	Hawarden Drive Southbound				Overlook Parkway Westbound				Hawarden Drive Northbound				Overlook Parkway Eastbound				
Start Time	Left	Thru	Right	App. Total	Left	Thru	Right	App. Total	Left	Thru	Right	App. Total	Left	Thru	Right	App. Total	Int. Total
07:00 AM	0	1	0	1	0	17	1	18	12	12	0	24	1	10	5	16	59
07:15 AM	3	1	2	6	0	27	8	35	10	16	0	26	1	12	6	19	86
07:30 AM	3	5	1	9	1	41	4	46	16	28	1	45	4	13	8	25	125
07:45 AM	2	4	4	10	0	36	2	38	11	15	1	27	0	11	4	15	90
Total	8	11	7	26	1	121	15	137	49	71	2	122	6	46	23	75	360
08:00 AM	0	5	2	7	0	29	1	30	14	9	3	26	1	12	6	19	82
08:15 AM	2	1	0	3	3	26	2	31	11	10	1	22	1	21	7	29	85
08:30 AM	3	3	1	7	1	31	5	37	18	6	0	24	2	13	3	18	86
08:45 AM	0	2	1	3	0	24	2	26	11	4	1	16	2	18	6	26	71
Total	5	11	4	20	4	110	10	124	54	29	5	88	6	64	22	92	324
Grand Total	13	22	11	46	5	231	25	261	103	100	7	210	12	110	45	167	684
Apprch %	28.3	47.8	23.9		1.9	88.5	9.6		49	47.6	3.3		7.2	65.9	26.9		
Total %	1.9	3.2	1.6	6.7	0.7	33.8	3.7	38.2	15.1	14.6	1	30.7	1.8	16.1	6.6	24.4	

	Hawarden Drive Southbound				Overlook Parkway Westbound				Hawarden Drive Northbound				Overlook Parkway Eastbound				
Start Time	Left	Thru	Right	App. Total	Left	Thru	Right	App. Total	Left	Thru	Right	App. Total	Left	Thru	Right	App. Total	Int. Total
Peak Hour Analysis From 07:00 AM to 08:45 AM - Peak 1 of 1																	
Peak Hour for Entire Intersection Begins at 07:15 AM																	
07:15 AM	**3**	1	2	6	0	27	**8**	35	10	16	0	26	1	12	6	19	86
07:30 AM	3	**5**	1	9	**1**	**41**	4	**46**	**16**	**28**	1	**45**	**4**	**13**	**8**	**25**	**125**
07:45 AM	2	4	**4**	**10**	0	36	2	38	11	15	1	27	0	11	4	15	90
08:00 AM	0	5	2	7	0	29	1	30	14	9	**3**	26	1	12	6	19	82
Total Volume	8	15	9	32	1	133	15	149	51	68	5	124	6	48	24	78	383
% App. Total	25	46.9	28.1		0.7	89.3	10.1		41.1	54.8	4		7.7	61.5	30.8		
PHF	.667	.750	.563	.800	.250	.811	.469	.810	.797	.607	.417	.689	.375	.923	.750	.780	.766

Counts Unlimited Inc.
PO Box 1178
Corona, CA 92878
(951) 268-6268

City of Riverside
N/S: Hawarden Drive
E/W: Overlook Parkway
Weather: Sunny

File Name : RIVHAOLAM
Site Code : 11028098
Start Date : 2/9/2011
Page No : 2

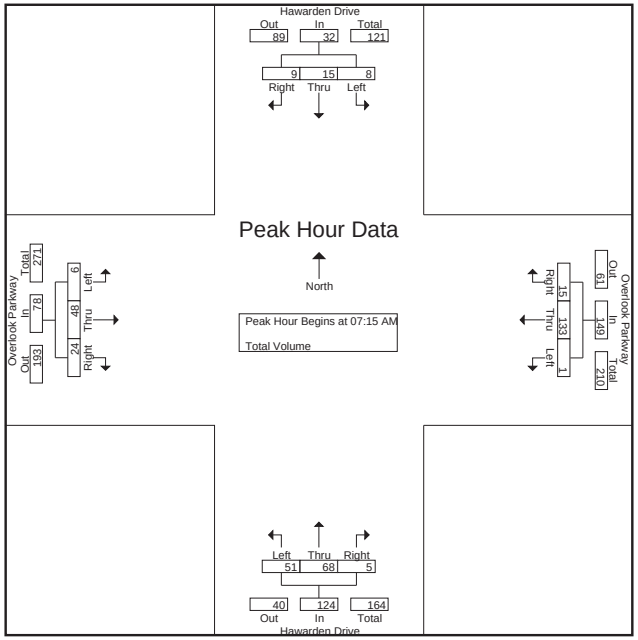

Peak Hour Analysis From 07:00 AM to 08:45 AM - Peak 1 of 1
Peak Hour for Each Approach Begins at:

	07:15 AM				07:15 AM				07:15 AM				08:00 AM			
+0 mins.	**3**	1	2	6	0	27	**8**	35	10	16	0	26	1	12	6	19
+15 mins.	3	**5**	1	9	**1**	**41**	4	**46**	**16**	**28**	1	**45**	1	**21**	**7**	**29**
+30 mins.	2	4	**4**	**10**	0	36	2	38	11	15	1	27	**2**	13	3	18
+45 mins.	0	5	2	7	0	29	1	30	14	9	**3**	26	2	18	6	26
Total Volume	8	15	9	32	1	133	15	149	51	68	5	124	6	64	22	92
% App. Total	25	46.9	28.1		0.7	89.3	10.1		41.1	54.8	4		6.5	69.6	23.9	
PHF	.667	.750	.563	.800	.250	.811	.469	.810	.797	.607	.417	.689	.750	.762	.786	.793

Counts Unlimited Inc.
PO Box 1178
Corona, CA 92878
(951) 268-6268

City of Riverside
N/S: Hawarden Drive
E/W: Overlook Parkway
Weather: Sunny

File Name : RIVHAOLPM
Site Code : 11028098
Start Date : 2/9/2011
Page No : 1

Groups Printed- Total Volume

	Ha□arden Drive Southbound				□verlook Park□ay Westbound				Ha□arden Drive Northbound				□verlook Park□ay Eastbound				
Start Time	Left	Thru	Right	App. Total	Left	Thru	Right	App. Total	Left	Thru	Right	App. Total	Left	Thru	Right	App. Total	Int. Total
04:00 PM	10	13	0	23	2	23	0	25	4	10	1	15	0	10	8	18	81
04:15 PM	4	12	3	19	2	22	5	29	3	7	0	10	2	22	15	39	97
04:30 PM	1	14	3	18	2	18	3	23	9	3	3	15	2	19	8	29	85
04:45 PM	1	10	2	13	1	16	2	19	11	5	1	17	1	17	9	27	76
Total	16	49	8	73	7	79	10	96	27	25	5	57	5	68	40	113	339
05:00 PM	3	9	5	17	0	15	1	16	5	4	1	10	4	39	10	53	96
05:15 PM	6	10	3	19	0	22	4	26	7	7	3	17	3	23	8	34	96
05:30 PM	5	15	4	24	1	20	3	24	3	2	0	5	2	24	10	36	89
05:45 PM	0	9	1	10	1	11	2	14	8	4	1	13	1	19	10	30	67
Total	14	43	13	70	2	68	10	80	23	17	5	45	10	105	38	153	348
Grand Total	30	92	21	143	9	147	20	176	50	42	10	102	15	173	78	266	687
Apprch %	21	64.3	14.7		5.1	83.5	11.4		49	41.2	9.8		5.6	65	29.3		
Total %	4.4	13.4	3.1	20.8	1.3	21.4	2.9	25.6	7.3	6.1	1.5	14.8	2.2	25.2	11.4	38.7	

	Ha□arden Drive Southbound				□verlook Park□ay Westbound				Ha□arden Drive Northbound				□verlook Park□ay Eastbound				
Start Time	Left	Thru	Right	App. Total	Left	Thru	Right	App. Total	Left	Thru	Right	App. Total	Left	Thru	Right	App. Total	Int. Total
Peak Hour Analysis From 04:00 PM to 05:45 PM - Peak 1 of 1																	
Peak Hour for Entire Intersection Begins at 04:45 PM																	
04:45 PM	1	10	2	13	**1**	16	2	19	**11**	5	1	**17**	1	17	9	27	76
05:00 PM	3	9	**5**	17	0	15	1	16	5	4	1	10	**4**	**39**	**10**	**53**	**96**
05:15 PM	**6**	10	3	19	0	**22**	**4**	**26**	7	**7**	**3**	17	3	23	8	34	96
05:30 PM	5	**15**	4	**24**	1	20	3	24	3	2	0	5	2	24	10	36	89
Total Volume	15	44	14	73	2	73	10	85	26	18	5	49	10	103	37	150	357
% App. Total	20.5	60.3	19.2		2.4	85.9	11.8		53.1	36.7	10.2		6.7	68.7	24.7		
PHF	.625	.733	.700	.760	.500	.830	.625	.817	.591	.643	.417	.721	.625	.660	.925	.708	.930

Counts Unlimited Inc.
PO Box 1178
Corona, CA 92878
(951) 268-6268

City of Riverside
N/S: Hawarden Drive
E/W: Overlook Parkway
Weather: Sunny

File Name : RIVHAOLPM
Site Code : 11028098
Start Date : 2/9/2011
Page No : 2

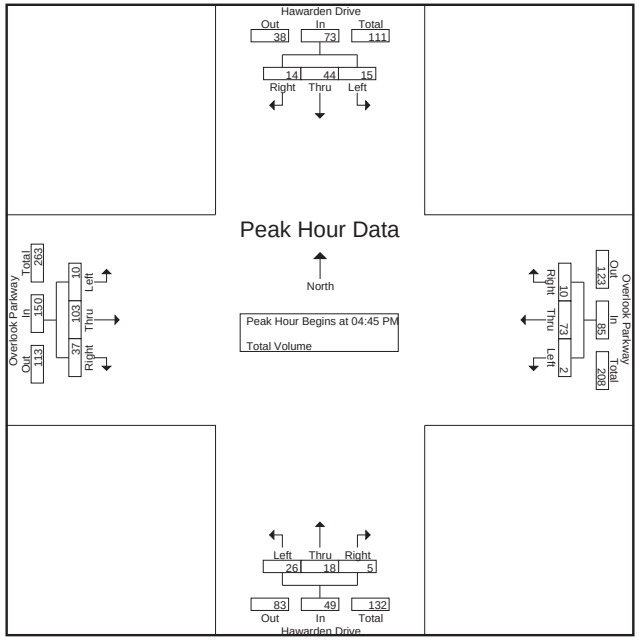

Peak Hour Analysis From 04:00 PM to 05:45 PM - Peak 1 of 1

Peak Hour for Each Approach Begins at:

	04:00 PM				04:00 PM				04:30 PM				05:00 PM			
0 mins.	**10**	13	0	**23**	**2**	**23**	0	25	9	3	**3**	15	**4**	**39**	**10**	**53**
15 mins.	4	12	**3**	19	2	22	**5**	**29**	**11**	5	1	**17**	3	23	8	34
30 mins.	1	**14**	3	18	2	18	3	23	5	4	1	10	2	24	10	36
45 mins.	1	10	2	13	1	16	2	19	7	**7**	3	17	1	19	10	30
Total Volume	16	49	8	73	7	79	10	96	32	19	8	59	10	105	38	153
% App. Total	21.9	67.1	11		7.3	82.3	10.4		54.2	32.2	13.6		6.5	68.6	24.8	
PHF	.400	.875	.667	.793	.875	.859	.500	.828	.727	.679	.667	.868	.625	.673	.950	.722

Counts Unlimited Inc.
PO Box 1178
Corona, CA 92878
(951) 268-6268

City of Riverside
N/S: Crystal View Terrace
E/W: Berry Road
Weather: Sunny

File Name : RIVCVBEAM
Site Code : 11028131
Start Date : 2/9/2011
Page No : 1

Groups Printed- Total Volume

	Crystal View Terrace Southbound				Berry Road Westbound				Crystal View Terrace Northbound				Berry Road Eastbound				
Start Time	Left	Thru	Right	App. Total	Left	Thru	Right	App. Total	Left	Thru	Right	App. Total	Left	Thru	Right	App. Total	Int. Total
07:00 AM	8	5	0	13	3	0	5	8	0	10	15	25	0	0	0	0	46
07:15 AM	11	6	0	17	5	1	13	19	1	20	30	51	0	1	1	2	89
07:30 AM	16	8	0	24	5	0	9	14	0	16	22	38	0	0	1	1	77
07:45 AM	10	5	0	15	9	0	7	16	0	9	20	29	0	0	0	0	60
Total	45	24	0	69	22	1	34	57	1	55	87	143	0	1	2	3	272
08:00 AM	16	6	0	22	11	0	8	19	0	9	28	37	0	0	0	0	78
08:15 AM	13	1	0	14	5	1	7	13	0	9	14	23	0	1	0	1	51
08:30 AM	12	3	0	15	5	1	11	17	0	2	9	11	0	1	0	1	44
08:45 AM	9	2	1	12	5	0	4	9	1	5	4	10	0	1	0	1	32
Total	50	12	1	63	26	2	30	58	1	25	55	81	0	3	0	3	205
09:00 AM	7	5	0	12	1	2	5	8	1	2	1	4	1	0	0	1	25
Grand Total	102	41	1	144	49	5	69	123	3	82	143	228	1	4	2	7	502
Apprch %	70.8	28.5	0.7		39.8	4.1	56.1		1.3	36	62.7		14.3	57.1	28.6		
Total %	20.3	8.2	0.2	28.7	9.8	1	13.7	24.5	0.6	16.3	28.5	45.4	0.2	0.8	0.4	1.4	

	Crystal View Terrace Southbound				Berry Road Westbound				Crystal View Terrace Northbound				Berry Road Eastbound				
Start Time	Left	Thru	Right	App. Total	Left	Thru	Right	App. Total	Left	Thru	Right	App. Total	Left	Thru	Right	App. Total	Int. Total
Peak Hour Analysis From 07:00 AM to 08:45 AM - Peak 1 of 1																	
Peak Hour for Entire Intersection Begins at 07:15 AM																	
07:15 AM	11	6	0	17	5	**1**	**13**	**19**	**1**	**20**	**30**	**51**	0	**1**	**1**	**2**	**89**
07:30 AM	**16**	**8**	0	**24**	5	0	9	14	0	16	22	38	0	0	1	1	77
07:45 AM	10	5	0	15	9	0	7	16	0	9	20	29	0	0	0	0	60
08:00 AM	16	6	0	22	**11**	0	8	19	0	9	28	37	0	0	0	0	78
Total Volume	53	25	0	78	30	1	37	68	1	54	100	155	0	1	2	3	304
% App. Total	67.9	32.1	0		44.1	1.5	54.4		0.6	34.8	64.5		0	33.3	66.7		
PHF	.828	.781	.000	.813	.682	.250	.712	.895	.250	.675	.833	.760	.000	.250	.500	.375	.854

Counts Unlimited Inc.
PO Box 1178
Corona, CA 92878
(951) 268-6268

City of Riverside
N/S: Crystal View Terrace
E/W: Berry Road
Weather: Sunny

File Name : RIVCVBEAM
Site Code : 11028131
Start Date : 2/9/2011
Page No : 2

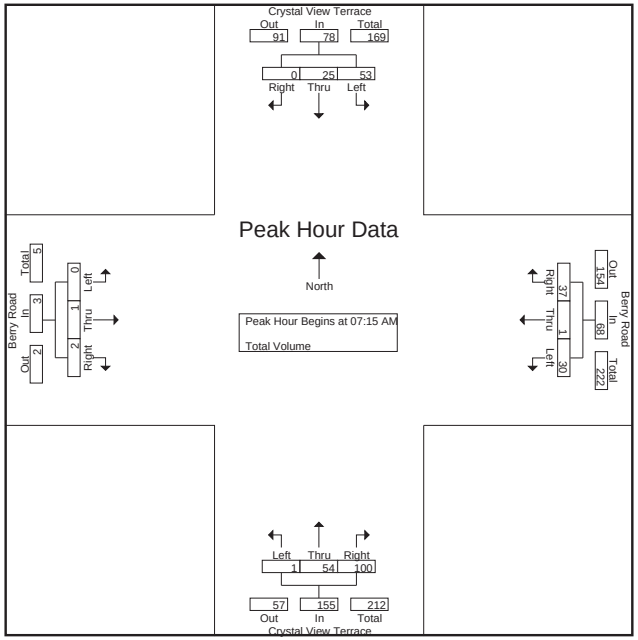

Peak Hour Analysis From 07:00 AM to 08:45 AM - Peak 1 of 1

Peak Hour for Each Approach Begins at:

	07:15 AM				07:15 AM				07:15 AM				07:00 AM			
0 mins.	11	6	0	17	5	**1**	**13**	**19**	**1**	**20**	**30**	**51**	0	0	0	0
15 mins.	**16**	**8**	0	**24**	5	0	9	14	0	16	22	38	0	**1**	**1**	**2**
30 mins.	10	5	0	15	9	0	7	16	0	9	20	29	0	0	1	1
45 mins.	16	6	0	22	**11**	0	8	19	0	9	28	37	0	0	0	0
Total Volume	53	25	0	78	30	1	37	68	1	54	100	155	0	1	2	3
% App. Total	67.9	32.1	0		44.1	1.5	54.4		0.6	34.8	64.5		0	33.3	66.7	
PHF	.828	.781	.000	.813	.682	.250	.712	.895	.250	.675	.833	.760	.000	.250	.500	.375

Counts Unlimited Inc.
PO Box 1178
Corona, CA 92878
(951) 268-6268

City of Riverside
N/S: Crystal View Terrace
E/W: Berry Road
Weather: Sunny

File Name : RIVCVBEPM
Site Code : 11028131
Start Date : 2/9/2011
Page No : 1

Groups Printed- Total Volume

	Crystal View Terrace Southbound				Berry Road Westbound				Crystal View Terrace Northbound				Berry Road Eastbound				
Start Time	Left	Thru	Right	App. Total	Left	Thru	Right	App. Total	Left	Thru	Right	App. Total	Left	Thru	Right	App. Total	Int. Total
04:00 PM	16	10	0	26	3	1	14	18	0	4	2	6	0	2	0	2	52
04:15 PM	11	6	0	17	4	2	8	14	0	5	8	13	0	2	0	2	46
04:30 PM	8	7	0	15	13	1	7	21	0	3	2	5	0	1	0	1	42
04:45 PM	12	7	0	19	8	0	11	19	0	6	7	13	0	0	0	0	51
Total	47	30	0	77	28	4	40	72	0	18	19	37	0	5	0	5	191
05:00 PM	19	6	0	25	8	0	11	19	0	3	5	8	0	0	1	1	53
05:15 PM	13	11	1	25	9	2	21	32	0	9	13	22	2	0	0	2	81
05:30 PM	11	4	1	16	6	0	14	20	1	6	4	11	0	0	0	0	47
05:45 PM	9	7	0	16	4	0	10	14	0	7	1	8	0	0	0	0	38
Total	52	28	2	82	27	2	56	85	1	25	23	49	2	0	1	3	219
Grand Total	99	58	2	159	55	6	96	157	1	43	42	86	2	5	1	8	410
Apprch %	62.3	36.5	1.3		35	3.8	61.1		1.2	50	48.8		25	62.5	12.5		
Total %	24.1	14.1	0.5	38.8	13.4	1.5	23.4	38.3	0.2	10.5	10.2	21	0.5	1.2	0.2	2	

	Crystal View Terrace Southbound				Berry Road Westbound				Crystal View Terrace Northbound				Berry Road Eastbound				
Start Time	Left	Thru	Right	App. Total	Left	Thru	Right	App. Total	Left	Thru	Right	App. Total	Left	Thru	Right	App. Total	Int. Total
Peak Hour Analysis From 04:00 PM to 05:45 PM - Peak 1 of 1																	
Peak Hour for Entire Intersection Begins at 04:45 PM																	
04:45 PM	12	7	0	19	8	0	11	19	0	6	7	13	0	0	0	0	51
05:00 PM	**19**	6	0	**25**	8	0	11	19	0	3	5	8	0	0	**1**	1	53
05:15 PM	13	**11**	**1**	25	**9**	**2**	**21**	**32**	0	**9**	**13**	**22**	**2**	0	0	**2**	**81**
05:30 PM	11	4	1	16	6	0	14	20	**1**	6	4	11	0	0	0	0	47
Total Volume	55	28	2	85	31	2	57	90	1	24	29	54	2	0	1	3	232
% App. Total	64.7	32.9	2.4		34.4	2.2	63.3		1.9	44.4	53.7		66.7	0	33.3		
PHF	.724	.636	.500	.850	.861	.250	.679	.703	.250	.667	.558	.614	.250	.000	.250	.375	.716

Counts Unlimited Inc.
PO Box 1178
Corona, CA 92878
(951) 268-6268

City of Riverside
N/S: Crystal View Terrace
E/W: Berry Road
Weather: Sunny

File Name : RIVCVBEPM
Site Code : 11028131
Start Date : 2/9/2011
Page No : 2

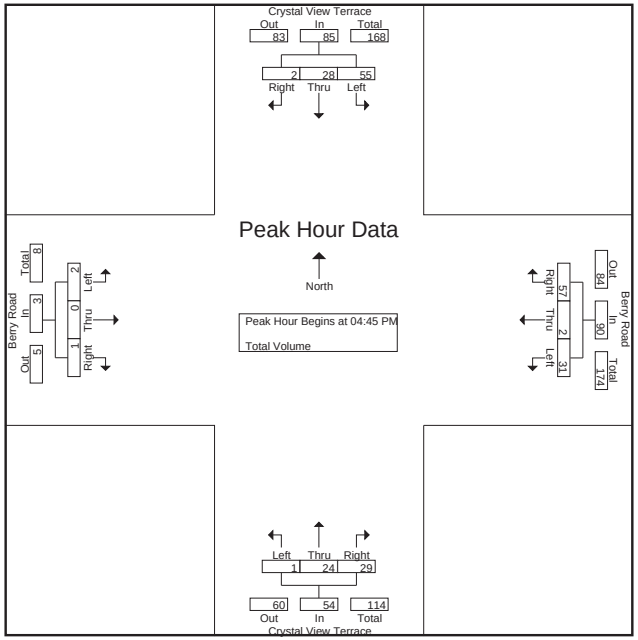

Peak Hour Analysis From 04:00 PM to 05:45 PM - Peak 1 of 1

Peak Hour for Each Approach Begins at:

	04:45 PM				04:30 PM				04:45 PM				04:00 PM			
0 mins.	12	7	0	19	**13**	1	7	21	0	6	7	13	0	**2**	0	**2**
15 mins.	**19**	6	0	**25**	8	0	11	19	0	3	5	8	0	2	0	2
30 mins.	13	**11**	**1**	25	8	0	11	19	0	**9**	**13**	**22**	0	1	0	1
45 mins.	11	4	1	16	9	**2**	**21**	**32**	**1**	6	4	11	0	0	0	0
Total Volume	55	28	2	85	38	3	50	91	1	24	29	54	0	5	0	5
% App. Total	64.7	32.9	2.4		41.8	3.3	54.9		1.9	44.4	53.7		0	100	0	
PHF	.724	.636	.500	.850	.731	.375	.595	.711	.250	.667	.558	.614	.000	.625	.000	.625

Counts Unlimited Inc.
PO Box 1178
Corona, CA 92878
(951) 268-6268

City of Riverside
N/S: Corinthian Way
E/W: Berry Road
Weather: Sunny

File Name : RIVCOBEAM
Site Code : 11028139
Start Date : 2/9/2011
Page No : 1

Groups Printed- Total Volume

	Corinthian Way Southbound			Berry Road Westbound			Berry Road Eastbound			
Start Time	Left	Right	App. Total	Thru	Right	App. Total	Left	Thru	App. Total	Int. Total
07:00 AM	0	2	2	3	3	6	12	9	21	29
07:15 AM	1	7	8	8	9	17	19	12	31	56
07:30 AM	2	1	3	12	8	20	38	6	44	67
07:45 AM	2	8	10	11	11	22	25	8	33	65
Total	5	18	23	34	31	65	94	35	129	217
08:00 AM	0	10	10	8	5	13	29	12	41	64
08:15 AM	2	9	11	5	5	10	30	8	38	59
08:30 AM	4	15	19	8	3	11	9	14	23	53
08:45 AM	4	8	12	0	3	3	10	7	17	32
Total	10	42	52	21	16	37	78	41	119	208
Grand Total	15	60	75	55	47	102	172	76	248	425
Apprch %	20	80		53.9	46.1		69.4	30.6		
Total %	3.5	14.1	17.6	12.9	11.1	24	40.5	17.9	58.4	

	Corinthian Way Southbound			Berry Road Westbound			Berry Road Eastbound			
Start Time	Left	Right	App. Total	Thru	Right	App. Total	Left	Thru	App. Total	Int. Total
Peak Hour Analysis From 07:00 AM to 08:45 AM - Peak 1 of 1										
Peak Hour for Entire Intersection Begins at 07:30 AM										
07:30 AM	**2**	1	3	**12**	8	20	**38**	6	**44**	**67**
07:45 AM	2	8	10	11	**11**	**22**	25	8	33	65
08:00 AM	0	**10**	10	8	5	13	29	**12**	41	64
08:15 AM	2	9	**11**	5	5	10	30	8	38	59
Total Volume	6	28	34	36	29	65	122	34	156	255
% App. Total	17.6	82.4		55.4	44.6		78.2	21.8		
PHF	.750	.700	.773	.750	.659	.739	.803	.708	.886	.951

Counts Unlimited Inc.
PO Box 1178
Corona, CA 92878
(951) 268-6268

City of Riverside
N/S: Corinthian Way
E/W: Berry Road
Weather: Sunny

File Name : RIVCOBEAM
Site Code : 11028139
Start Date : 2/9/2011
Page No : 2

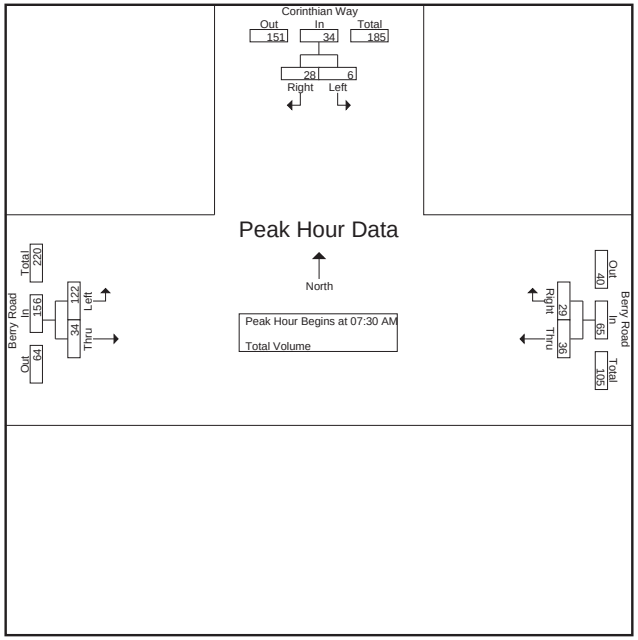

Peak Hour Analysis From 07:00 AM to 08:45 AM - Peak 1 of 1

Peak Hour for Each Approach Begins at:

	08:00 AM			07:15 AM			07:30 AM		
0 mins.	0	10	10	8	9	17	**38**	6	**44**
15 mins.	2	9	11	**12**	8	20	25	8	33
30 mins.	**4**	**15**	**19**	11	**11**	**22**	29	**12**	41
45 mins.	4	8	12	8	5	13	30	8	38
Total Volume	10	42	52	39	33	72	122	34	156
% App. Total	19.2	80.8		54.2	45.8		78.2	21.8	
PHF	.625	.700	.684	.813	.750	.818	.803	.708	.886

Counts Unlimited Inc.
PO Box 1178
Corona, CA 92878
(951) 268-6268

City of Riverside
N/S: Corinthian Way
E/W: Berry Road
Weather: Sunny

File Name : RIVCOBEPM
Site Code : 11028139
Start Date : 2/9/2011
Page No : 1

Groups Printed- Total Volume

	Corinthian Way Southbound			Berry Road Westbound			Berry Road Eastbound			
Start Time	Left	Right	App. Total	Thru	Right	App. Total	Left	Thru	App. Total	Int. Total
04:00 PM	1	11	12	6	4	10	6	14	20	42
04:15 PM	0	10	10	5	0	5	12	9	21	36
04:30 PM	1	13	14	7	3	10	7	5	12	36
04:45 PM	2	8	10	12	0	12	8	10	18	40
Total	4	42	46	30	7	37	33	38	71	154
05:00 PM	0	12	12	7	3	10	13	11	24	46
05:15 PM	6	19	25	14	4	18	13	13	26	69
05:30 PM	9	9	18	10	3	13	8	10	18	49
05:45 PM	4	10	14	5	3	8	4	6	10	32
Total	19	50	69	36	13	49	38	40	78	196
Grand Total	23	92	115	66	20	86	71	78	149	350
Apprch %	20	80		76.7	23.3		47.7	52.3		
Total %	6.6	26.3	32.9	18.9	5.7	24.6	20.3	22.3	42.6	

	Corinthian Way Southbound			Berry Road Westbound			Berry Road Eastbound			
Start Time	Left	Right	App. Total	Thru	Right	App. Total	Left	Thru	App. Total	Int. Total
Peak Hour Analysis From 04:00 PM to 05:45 PM - Peak 1 of 1										
Peak Hour for Entire Intersection Begins at 04:45 PM										
04:45 PM	2	8	10	12	0	12	8	10	18	40
05:00 PM	0	12	12	7	3	10	**13**	11	24	46
05:15 PM	6	**19**	**25**	**14**	**4**	**18**	13	**13**	**26**	**69**
05:30 PM	**9**	9	18	10	3	13	8	10	18	49
Total Volume	17	48	65	43	10	53	42	44	86	204
% App. Total	26.2	73.8		81.1	18.9		48.8	51.2		
PHF	.472	.632	.650	.768	.625	.736	.808	.846	.827	.739

Counts Unlimited Inc.
PO Box 1178
Corona, CA 92878
(951) 268-6268

City of Riverside
N/S: Corinthian Way
E/W: Berry Road
Weather: Sunny

File Name : RIVCOBEPM
Site Code : 11028139
Start Date : 2/9/2011
Page No : 2

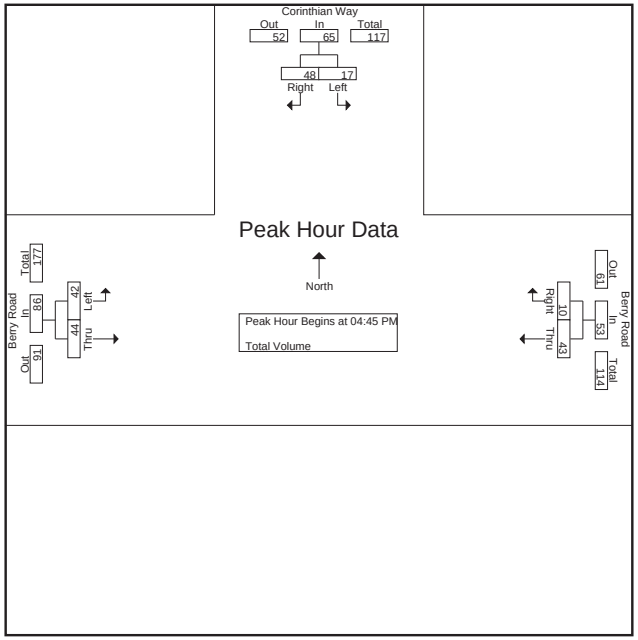

Peak Hour Analysis From 04:00 PM to 05:45 PM - Peak 1 of 1

Peak Hour for Each Approach Begins at:

	05:00 PM			04:45 PM			04:45 PM		
0 mins.	0	12	12	12	0	12	8	10	18
15 mins.	6	**19**	**25**	7	3	10	**13**	11	24
30 mins.	**9**	9	18	**14**	**4**	**18**	13	**13**	**26**
45 mins.	4	10	14	10	3	13	8	10	18
Total Volume	19	50	69	43	10	53	42	44	86
% App. Total	27.5	72.5		81.1	18.9		48.8	51.2	
PHF	.528	.658	.690	.768	.625	.736	.808	.846	.827

Counts Unlimited, Inc.
PO Box 1178
Corona, CA 92878
(951) 268-6268

City of Riverside
N/S: Madison Street/Prenda Avenue
E/W: Dufferin Avenue
Weather: Sunny

File Name : RIVMADUAM
Site Code : 11046132
Start Date : 4/21/2011
Page No : 1

Groups Printed- Total Volume

	Madison Street Southbound				ufferin A enue Westbound				ufferin A enue Eastbound				Prenda A enue Southwestbound				
Start Time	Hard Left	Left	Right	App. Total	Thru	Right	Hard Right	App. Total	Left	Bear Left	Thru	App. Total	Hard Left	Bear Right	Hard Right	App. Total	Int. Total
07:00 AM	0	8	2	10	2	3	1	6	1	0	3	4	3	0	0	3	23
07:15 AM	0	8	0	8	7	7	0	14	2	0	1	3	0	0	2	2	27
07:30 AM	0	5	1	6	7	6	1	14	1	0	2	3	0	0	0	0	23
07:45 AM	0	4	3	7	7	3	0	10	2	0	2	4	0	0	0	0	21
Total	0	25	6	31	23	19	2	44	6	0	8	14	3	0	2	5	94
08:00 AM	0	8	1	9	8	12	0	20	4	1	5	10	0	0	0	0	39
08:15 AM	0	8	1	9	4	4	0	8	1	0	1	2	0	0	0	0	19
08:30 AM	0	10	0	10	7	3	0	10	0	1	0	1	0	0	0	0	21
08:45 AM	1	8	1	10	3	5	0	8	2	0	1	3	0	0	0	0	21
Total	1	34	3	38	22	24	0	46	7	2	7	16	0	0	0	0	100
Grand Total	1	59	9	69	45	43	2	90	13	2	15	30	3	0	2	5	194
Apprch %	1.4	85.5	13		50	47.8	2.2		43.3	6.7	50		60	0	40		
Total %	0.5	30.4	4.6	35.6	23.2	22.2	1	46.4	6.7	1	7.7	15.5	1.5	0	1	2.6	

	Madison Street Southbound				ufferin A enue Westbound				ufferin A enue Eastbound				Prenda A enue Southwestbound				
Start Time	Hard Left	Left	Right	App. Total	Thru	Right	Hard Right	App. Total	Left	Bear Left	Thru	App. Total	Hard Left	Bear Right	Hard Right	App. Total	Int. Total
Peak Hour Analysis From 07:00 AM to 08:45 AM - Peak 1 of 1																	
Peak Hour for Entire Intersection Begins at 07:15 AM																	
07:15 AM	0	**8**	0	8	7	7	0	14	2	0	1	3	0	0	**2**	**2**	27
07:30 AM	0	5	1	6	7	6	**1**	14	1	0	2	3	0	0	0	0	23
07:45 AM	0	4	**3**	7	7	3	0	10	2	0	2	4	0	0	0	0	21
08:00 AM	0	8	1	**9**	**8**	**12**	0	**20**	**4**	**1**	**5**	**10**	0	0	0	0	**39**
Total Volume	0	25	5	30	29	28	1	58	9	1	10	20	0	0	2	2	110
% App. Total	0	83.3	16.7		50	48.3	1.7		45	5	50		0	0	100		
PHF	.000	.781	.417	.833	.906	.583	.250	.725	.563	.250	.500	.500	.000	.000	.250	.250	.705

Counts Unlimited, Inc.
PO Box 1178
Corona, CA 92878
(951) 268-6268

City of Riverside
N/S: Madison Street/Prenda Avenue
E/W: Dufferin Avenue
Weather: Sunny

File Name : RIVMADUAM
Site Code : 11046132
Start Date : 4/21/2011
Page No : 2

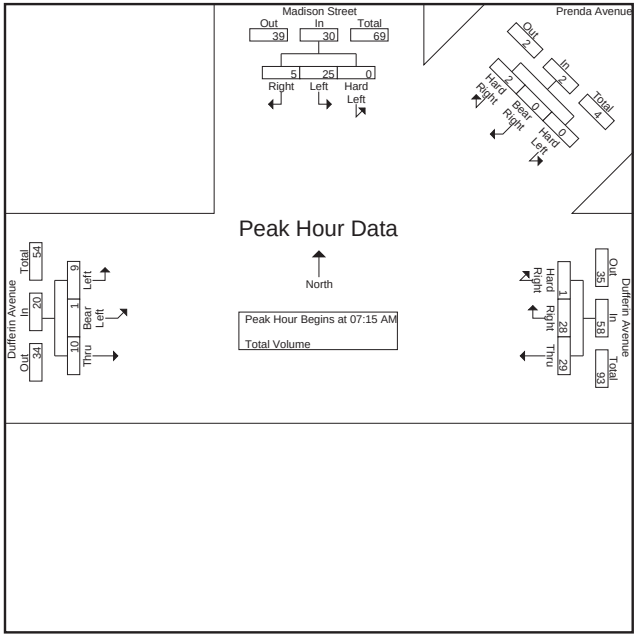

Peak Hour Analysis From 07:00 AM to 08:45 AM - Peak 1 of 1

Peak Hour for Each Approach Begins at:

	08:00 AM				07:15 AM				07:15 AM				07:00 AM			
0 mins.	0	8	**1**	9	7	7	0	14	2	0	1	3	**3**	0	0	**3**
15 mins.	0	8	1	9	7	6	**1**	14	1	0	2	3	0	0	**2**	2
30 mins.	0	**10**	0	**10**	7	3	0	10	2	0	2	4	0	0	0	0
45 mins.	**1**	8	1	10	**8**	**12**	0	**20**	**4**	**1**	**5**	**10**	0	0	0	0
Total Volume	1	34	3	38	29	28	1	58	9	1	10	20	3	0	2	5
% App. Total	2.6	89.5	7.9		50	48.3	1.7		45	5	50		60	0	40	
PHF	.250	.850	.750	.950	.906	.583	.250	.725	.563	.250	.500	.500	.250	.000	.250	.417

Counts Unlimited, Inc.
PO Box 1178
Corona, CA 92878
(951) 268-6268

City of Riverside
N/S: Madison Street/Prenda Avenue
E/W: Dufferin Avenue
Weather: Sunny

File Name : RIVMADUPM
Site Code : 11046132
Start Date : 4/21/2011
Page No : 1

Groups Printed- Total Volume

	Madison Street Southbound				ufferin A enue Westbound				ufferin A enue Eastbound				Prenda A enue Southwestbound				
Start Time	Hard Left	Left	Right	App. Total	Thru	Right	Hard Right	App. Total	Left	Bear Left	Thru	App. Total	Hard Left	Bear Right	Hard Right	App. Total	Int. Total
04:00 PM	0	15	3	18	4	1	0	5	3	1	6	10	0	1	0	1	34
04:15 PM	0	15	1	16	5	7	2	14	1	0	3	4	0	0	0	0	34
04:30 PM	0	9	2	11	5	4	0	9	2	0	0	2	0	0	0	0	22
04:45 PM	0	9	3	12	4	3	1	8	1	0	2	3	0	0	0	0	23
Total	0	48	9	57	18	15	3	36	7	1	11	19	0	1	0	1	113
05:00 PM	0	13	0	13	4	1	0	5	3	0	5	8	0	0	1	1	27
05:15 PM	0	14	5	19	2	2	0	4	2	0	6	8	0	0	1	1	32
05:30 PM	0	14	2	16	4	0	1	5	0	0	3	3	2	0	0	2	26
05:45 PM	1	8	0	9	1	1	0	2	0	3	7	10	0	0	0	0	21
Total	1	49	7	57	11	4	1	16	5	3	21	29	2	0	2	4	106
Grand Total	1	97	16	114	29	19	4	52	12	4	32	48	2	1	2	5	219
Apprch %	0.9	85.1	14		55.8	36.5	7.7		25	8.3	66.7		40	20	40		
Total %	0.5	44.3	7.3	52.1	13.2	8.7	1.8	23.7	5.5	1.8	14.6	21.9	0.9	0.5	0.9	2.3	

	Madison Street Southbound				ufferin A enue Westbound				ufferin A enue Eastbound				Prenda A enue Southwestbound				
Start Time	Hard Left	Left	Right	App. Total	Thru	Right	Hard Right	App. Total	Left	Bear Left	Thru	App. Total	Hard Left	Bear Right	Hard Right	App. Total	Int. Total
Peak Hour Analysis From 04:00 PM to 05:45 PM - Peak 1 of 1																	
Peak Hour for Entire Intersection Begins at 04:00 PM																	
04:00 PM	0	**15**	**3**	**18**	4	1	0	5	**3**	**1**	**6**	**10**	0	**1**	0	**1**	**34**
04:15 PM	0	15	1	16	**5**	**7**	**2**	**14**	1	0	3	4	0	0	0	0	34
04:30 PM	0	9	2	11	5	4	0	9	2	0	0	2	0	0	0	0	22
04:45 PM	0	9	3	12	4	3	1	8	1	0	2	3	0	0	0	0	23
Total Volume	0	48	9	57	18	15	3	36	7	1	11	19	0	1	0	1	113
% App. Total	0	84.2	15.8		50	41.7	8.3		36.8	5.3	57.9		0	100	0		
PHF	.000	.800	.750	.792	.900	.536	.375	.643	.583	.250	.458	.475	.000	.250	.000	.250	.831

Counts Unlimited, Inc.
PO Box 1178
Corona, CA 92878
(951) 268-6268

City of Riverside
N/S: Madison Street/Prenda Avenue
E/W: Dufferin Avenue
Weather: Sunny

File Name : RIVMADUPM
Site Code : 11046132
Start Date : 4/21/2011
Page No : 2

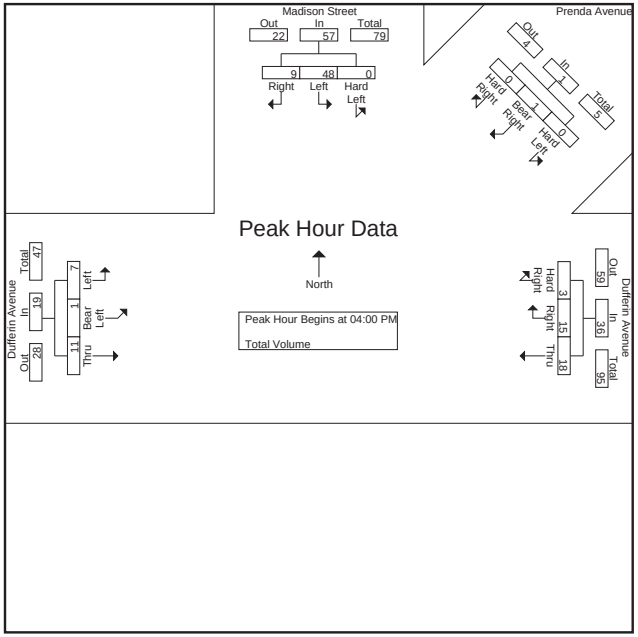

Peak Hour Analysis From 04:00 PM to 05:45 PM - Peak 1 of 1

Peak Hour for Each Approach Begins at:

	04:45 PM				04:00 PM				05:00 PM				04:45 PM			
0 mins.	0	9	3	12	4	1	0	5	**3**	0	5	8	0	0	0	0
15 mins.	0	13	0	13	**5**	**7**	**2**	**14**	2	0	6	8	0	0	**1**	1
30 mins.	0	**14**	**5**	**19**	5	4	0	9	0	0	3	3	0	0	1	1
45 mins.	0	14	2	16	4	3	1	8	0	**3**	**7**	**10**	**2**	0	0	**2**
Total Volume	0	50	10	60	18	15	3	36	5	3	21	29	2	0	2	4
% App. Total	0	83.3	16.7		50	41.7	8.3		17.2	10.3	72.4		50	0	50	
PHF	.000	.893	.500	.789	.900	.536	.375	.643	.417	.250	.750	.725	.250	.000	.500	.500

Counts Unlimited, Inc.
PO Box 1178
Corona, CA 92878
(951) 268-6268

City of Riverside
N/S: Orozco Drive
E/W: Overlook Parkway
Weather: Sunny

File Name : RIVOROVAM
Site Code : 11046013
Start Date : 4/21/2011
Page No : 1

Groups Printed- Total Volume

	Orozco Drive Southbound				Overlook Parkway Westbound				Orozco Drive Northbound				Overlook Parkway Eastbound				
Start Time	Left	Thru	Right	App. Total	Left	Thru	Right	App. Total	Left	Thru	Right	App. Total	Left	Thru	Right	App. Total	Int. Total
07:00 AM	5	0	1	6	1	10	10	21	0	1	0	1	1	12	0	13	41
07:15 AM	4	1	1	6	0	22	12	34	1	1	1	3	1	10	0	11	54
07:30 AM	3	2	1	6	0	23	17	40	2	1	1	4	1	12	0	13	63
07:45 AM	8	0	0	8	1	30	13	44	0	1	1	2	2	9	0	11	65
Total	20	3	3	26	2	85	52	139	3	4	3	10	5	43	0	48	223
08:00 AM	10	0	0	10	0	21	11	32	2	1	0	3	0	19	0	19	64
08:15 AM	3	1	0	4	0	24	10	34	0	3	0	3	3	12	1	16	57
08:30 AM	2	1	2	5	0	19	8	27	1	1	1	3	3	18	1	22	57
08:45 AM	3	0	1	4	0	12	6	18	0	0	0	0	1	15	0	16	38
Total	18	2	3	23	0	76	35	111	3	5	1	9	7	64	2	73	216
Grand Total	38	5	6	49	2	161	87	250	6	9	4	19	12	107	2	121	439
Apprch %	77.6	10.2	12.2		0.8	64.4	34.8		31.6	47.4	21.1		9.9	88.4	1.7		
Total %	8.7	1.1	1.4	11.2	0.5	36.7	19.8	56.9	1.4	2.1	0.9	4.3	2.7	24.4	0.5	27.6	

	Orozco Drive Southbound				Overlook Parkway Westbound				Orozco Drive Northbound				Overlook Parkway Eastbound				
Start Time	Left	Thru	Right	App. Total	Left	Thru	Right	App. Total	Left	Thru	Right	App. Total	Left	Thru	Right	App. Total	Int. Total
Peak Hour Analysis From 07:00 AM to 08:45 AM - Peak 1 of 1																	
Peak Hour for Entire Intersection Begins at 07:30 AM																	
07:30 AM	3	**2**	**1**	6	0	23	**17**	40	**2**	1	**1**	**4**	1	12	0	13	63
07:45 AM	8	0	0	8	**1**	**30**	13	**44**	0	1	1	2	2	9	0	11	**65**
08:00 AM	**10**	0	0	**10**	0	21	11	32	2	1	0	3	0	**19**	0	**19**	64
08:15 AM	3	1	0	4	0	24	10	34	0	**3**	0	3	**3**	12	**1**	16	57
Total Volume	24	3	1	28	1	98	51	150	4	6	2	12	6	52	1	59	249
% App. Total	85.7	10.7	3.6		0.7	65.3	34		33.3	50	16.7		10.2	88.1	1.7		
PHF	.600	.375	.250	.700	.250	.817	.750	.852	.500	.500	.500	.750	.500	.684	.250	.776	.958

Counts Unlimited, Inc.
PO Box 1178
Corona, CA 92878
(951) 268-6268

City of Riverside
N/S: Orozco Drive
E/W: Overlook Parkway
Weather: Sunny

File Name : RIVOROVAM
Site Code : 11046013
Start Date : 4/21/2011
Page No : 2

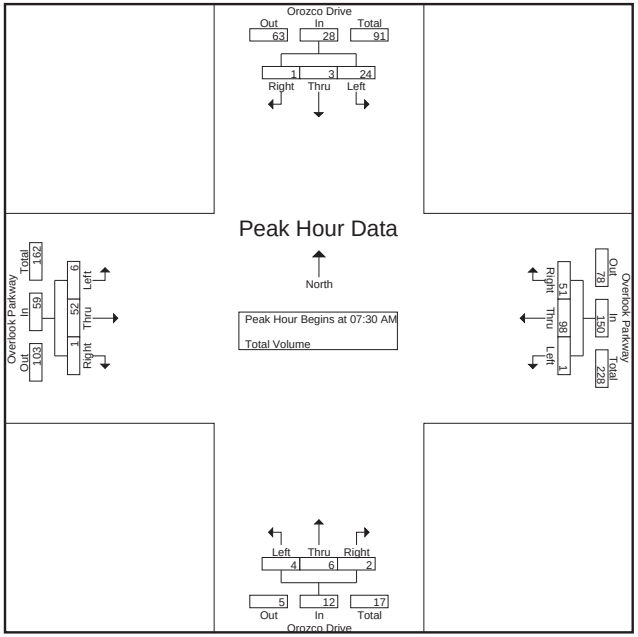

Peak Hour Analysis From 07:00 AM to 08:45 AM - Peak 1 of 1

Peak Hour for Each Approach Begins at:

	07:15 AM				07:15 AM				07:15 AM				08:00 AM			
0 mins.	4	1	**1**	6	0	22	12	34	1	**1**	**1**	3	0	**19**	0	19
15 mins.	3	**2**	1	6	0	23	**17**	40	**2**	1	1	**4**	**3**	12	**1**	16
30 mins.	8	0	0	8	**1**	**30**	13	**44**	0	1	1	2	3	18	1	**22**
45 mins.	**10**	0	0	**10**	0	21	11	32	2	1	0	3	1	15	0	16
Total Volume	25	3	2	30	1	96	53	150	5	4	3	12	7	64	2	73
% App. Total	83.3	10	6.7		0.7	64	35.3		41.7	33.3	25		9.6	87.7	2.7	
PHF	.625	.375	.500	.750	.250	.800	.779	.852	.625	1.000	.750	.750	.583	.842	.500	.830

Counts Unlimited, Inc.
PO Box 1178
Corona, CA 92878
(951) 268-6268

City of Riverside
N/S: Orozco Drive
E/W: Overlook Parkway
Weather: Sunny

File Name : RIVOROVPM
Site Code : 11046013
Start Date : 4/21/2011
Page No : 1

Groups Printed- Total Volume

	Orozco Drive Southbound				Overlook Parkway Westbound				Orozco Drive Northbound				Overlook Parkway Eastbound				
Start Time	Left	Thru	Right	App. Total	Left	Thru	Right	App. Total	Left	Thru	Right	App. Total	Left	Thru	Right	App. Total	Int. Total
04:00 PM	13	1	0	14	0	10	6	16	0	0	1	1	1	19	2	22	53
04:15 PM	12	4	2	18	0	23	1	24	2	0	0	2	3	24	0	27	71
04:30 PM	5	0	3	8	0	23	2	25	1	1	0	2	2	16	2	20	55
04:45 PM	14	4	1	19	0	23	2	25	2	0	0	2	1	19	0	20	66
Total	44	9	6	59	0	79	11	90	5	1	1	7	7	78	4	89	245
05:00 PM	7	0	2	9	0	14	2	16	1	0	0	1	2	20	2	24	50
05:15 PM	6	4	4	14	3	15	2	20	1	0	0	1	0	27	1	28	63
05:30 PM	11	3	0	14	0	17	5	22	1	0	0	1	0	18	1	19	56
05:45 PM	13	1	0	14	0	11	8	19	1	0	0	1	2	25	0	27	61
Total	37	8	6	51	3	57	17	77	4	0	0	4	4	90	4	98	230
Grand Total	81	17	12	110	3	136	28	167	9	1	1	11	11	168	8	187	475
Apprch %	73.6	15.5	10.9		1.8	81.4	16.8		81.8	9.1	9.1		5.9	89.8	4.3		
Total %	17.1	3.6	2.5	23.2	0.6	28.6	5.9	35.2	1.9	0.2	0.2	2.3	2.3	35.4	1.7	39.4	

	Orozco Drive Southbound				Overlook Parkway Westbound				Orozco Drive Northbound				Overlook Parkway Eastbound				
Start Time	Left	Thru	Right	App. Total	Left	Thru	Right	App. Total	Left	Thru	Right	App. Total	Left	Thru	Right	App. Total	Int. Total
Peak Hour Analysis From 04:00 PM to 05:45 PM - Peak 1 of 1																	
Peak Hour for Entire Intersection Begins at 04:00 PM																	
04:00 PM	13	1	0	14	0	10	**6**	16	0	0	**1**	1	1	19	**2**	22	53
04:15 PM	12	**4**	2	18	0	**23**	1	24	**2**	0	0	**2**	**3**	**24**	0	**27**	**71**
04:30 PM	5	0	**3**	8	0	23	2	**25**	1	**1**	0	2	2	16	2	20	55
04:45 PM	**14**	4	1	**19**	0	23	2	25	2	0	0	2	1	19	0	20	66
Total Volume	44	9	6	59	0	79	11	90	5	1	1	7	7	78	4	89	245
% App. Total	74.6	15.3	10.2		0	87.8	12.2		71.4	14.3	14.3		7.9	87.6	4.5		
PHF	.786	.563	.500	.776	.000	.859	.458	.900	.625	.250	.250	.875	.583	.813	.500	.824	.863

Counts Unlimited, Inc.
PO Box 1178
Corona, CA 92878
(951) 268-6268

City of Riverside
N/S: Orozco Drive
E/W: Overlook Parkway
Weather: Sunny

File Name : RIVOROVPM
Site Code : 11046013
Start Date : 4/21/2011
Page No : 2

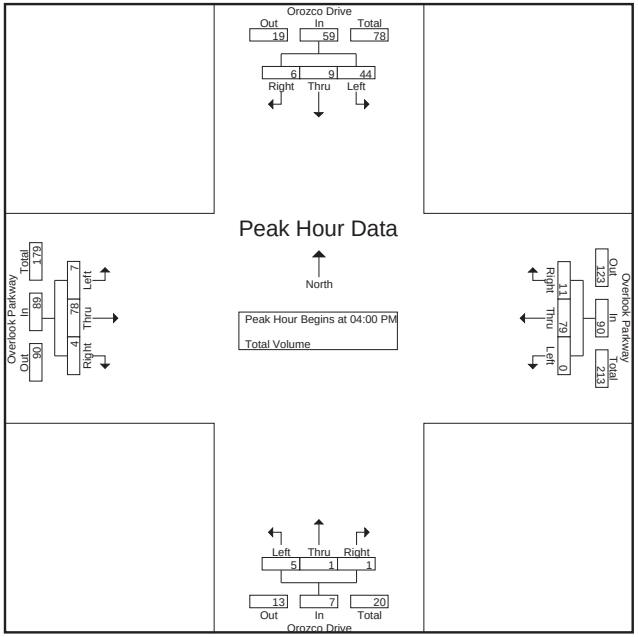

Peak Hour Analysis From 04:00 PM to 05:45 PM - Peak 1 of 1

Peak Hour for Each Approach Begins at:

	04:00 PM				04:00 PM				04:00 PM				05:00 PM			
0 mins.	13	1	0	14	0	10	**6**	16	0	0	**1**	1	**2**	20	**2**	24
15 mins.	12	**4**	2	18	0	**23**	1	24	**2**	0	0	**2**	0	**27**	1	**28**
30 mins.	5	0	**3**	8	0	23	2	**25**	1	**1**	0	2	0	18	1	19
45 mins.	**14**	4	1	**19**	0	23	2	25	2	0	0	2	2	25	0	27
Total Volume	44	9	6	59	0	79	11	90	5	1	1	7	4	90	4	98
% App. Total	74.6	15.3	10.2		0	87.8	12.2		71.4	14.3	14.3		4.1	91.8	4.1	
PHF	.786	.563	.500	.776	.000	.859	.458	.900	.625	.250	.250	.875	.500	.833	.500	.875

Counts Unlimited, Inc
PO Box 1178
Corona, CA 92878
(951) 268-6268

City of Riverside
Victoria Avenue
E/ Washington Street
24 Hour Directional Volume Count

RIV001
Site Code: 042-11028
Date Start: 10-Feb-11
Date End: 10-Feb-11

Start Time	10-Feb-11 Thu	Eastbound Morning	Eastbound Afternoon	Hour Totals Morning	Hour Totals Afternoon	Westbound Morning	Westbound Afternoon	Hour Totals Morning	Hour Totals Afternoon	Combined Totals Morning	Combined Totals Afternoon
12:00		1	61			6	70				
12:15		4	56			8	68				
12:30		1	70			4	61				
12:45		2	69	8	256	3	76	21	275	29	531
01:00		4	68			4	69				
01:15		2	85			2	95				
01:30		1	74			3	73				
01:45		2	67	9	294	3	99	12	336	21	630
02:00		1	73			1	86				
02:15		0	90			2	98				
02:30		4	103			1	74				
02:45		1	101	6	367	2	98	6	356	12	723
03:00		1	88			2	125				
03:15		0	103			2	120				
03:30		2	108			1	93				
03:45		2	76	5	375	1	100	6	438	11	813
04:00		1	75			2	94				
04:15		3	79			4	120				
04:30		1	87			5	126				
04:45		4	**100**	9	341	4	**135**	15	475	24	816
05:00		1	**112**			3	**126**				
05:15		11	**105**			7	**136**				
05:30		17	**106**			10	**132**				
05:45		21	73	50	396	14	135	34	529	84	925
06:00		19	84			8	111				
06:15		39	65			13	81				
06:30		68	63			27	72				
06:45		94	61	220	273	45	61	93	325	313	598
07:00		129	45			49	61				
07:15		**177**	33			**87**	52				
07:30		**188**	25			**100**	44				
07:45		**179**	34	673	137	**104**	39	340	196	1013	333
08:00		**140**	28			**98**	45				
08:15		148	38			67	50				
08:30		108	10			61	45				
08:45		137	30	533	106	55	39	281	179	814	285
09:00		86	22			48	31				
09:15		92	20			59	43				
09:30		89	27			57	42				
09:45		86	19	353	88	58	37	222	153	575	241
10:00		87	14			65	26				
10:15		66	9			54	19				
10:30		71	13			50	18				
10:45		69	14	293	50	59	17	228	80	521	130
11:00		58	8			62	12				
11:15		83	4			50	9				
11:30		70	6			62	12				
11:45		61	8	272	26	46	8	220	41	492	67
Total		2431	2709	2431	2709	1478	3383	1478	3383	3909	6092
Combined Total		5140		5140		4861		4861		10001	
AM Peak		07:15				07:15					
Vol.		684				389					
P.H.F.		0.910				0.935					
PM Peak			04:45				04:45				
Vol.			423				529				
P.H.F.			0.944				0.972				
Percentage		47.3%	52.7%			30.4%	69.6%				
ADT/AADT		ADT 10,001		AADT 10,001							

Counts Unlimited, Inc
PO Box 1178
Corona, CA 92878
(951) 268-6268

City of Riverside
Overlook Parkway
E/ Washington Street
24 Hour Directional Volume Count

RIV002
Site Code: 042-11028
Date Start: 09-Feb-11
Date End: 09-Feb-11

Start Time	09-Feb-11 Wed	Eastbound Morning	Eastbound Afternoon	Hour Totals Morning	Hour Totals Afternoon	Westbound Morning	Westbound Afternoon	Hour Totals Morning	Hour Totals Afternoon	Combined Totals Morning	Combined Totals Afternoon
12:00		6	23			0	26				
12:15		3	32			2	**33**				
12:30		5	27			1	**23**				
12:45		3	23	17	105	1	**35**	4	117	21	222
01:00		1	28			1	**37**				
01:15		0	23			0	21				
01:30		0	26			1	31				
01:45		1	27	2	104	0	23	2	112	4	216
02:00		1	21			0	18				
02:15		2	23			0	33				
02:30		1	31			0	24				
02:45		1	42	5	117	0	24	0	99	5	216
03:00		1	22			0	31				
03:15		0	28			0	27				
03:30		0	44			3	29				
03:45		2	43	3	137	0	29	3	116	6	253
04:00		0	34			4	20				
04:15		0	38			4	28				
04:30		0	33			4	28				
04:45		0	27	0	132	4	33	16	109	16	241
05:00		1	**54**			8	27				
05:15		0	**38**			13	34				
05:30		0	**38**			7	30				
05:45		4	**37**	5	167	6	28	34	119	39	286
06:00		2	48			11	21				
06:15		1	31			12	32				
06:30		6	28			26	29				
06:45		12	44	21	151	43	22	92	104	113	255
07:00		18	36			35	17				
07:15		17	20			**44**	17				
07:30		25	21			**62**	9				
07:45		18	29	78	106	**56**	9	197	52	275	158
08:00		**23**	26			**49**	12				
08:15		**30**	26			41	6				
08:30		**21**	15			50	8				
08:45		**24**	21	98	88	48	6	188	32	286	120
09:00		21	19			37	9				
09:15		20	22			45	7				
09:30		19	20			32	6				
09:45		14	19	74	80	37	5	151	27	225	107
10:00		22	11			33	3				
10:15		18	8			26	6				
10:30		21	10			30	4				
10:45		19	5	80	34	40	5	129	18	209	52
11:00		13	12			31	4				
11:15		17	7			29	3				
11:30		18	0			19	1				
11:45		26	5	74	24	26	0	105	8	179	32
Total		457	1245	457	1245	921	913	921	913	1378	2158
Combined Total		1702		1702		1834		1834		3536	
AM Peak		08:00				07:15					
Vol.		98				211					
P.H.F.		0.817				0.851					
PM Peak			05:00				00:15				
Vol.			167				128				
P.H.F.			0.773				0.865				
Percentage		26.9%	73.1%			50.2%	49.8%				
ADT/AADT		ADT 3,536		AADT 3,536							

Counts Unlimited, Inc
PO Box 1178
Corona, CA 92878
(951) 268-6268

City of Riverside
Bradly Street
E/ Washington Street
24 Hour Directional Volume Count

RIV003
Site Code: 042-11028
Date Start: 09-Feb-11
Date End: 09-Feb-11

Start Time	09-Feb-11 Wed	Eastbound Morning	Eastbound Afternoon	Hour Totals Morning	Hour Totals Afternoon	Westbound Morning	Westbound Afternoon	Hour Totals Morning	Hour Totals Afternoon	Combined Totals Morning	Combined Totals Afternoon
12:00		4	14			3	14				
12:15		3	22			0	15				
12:30		1	16			0	11				
12:45		3	15	11	67	2	14	5	54	16	121
01:00		1	31			0	21				
01:15		2	15			1	21				
01:30		0	13			0	19				
01:45		0	15	3	74	0	15	1	76	4	150
02:00		2	21			0	18				
02:15		2	31			0	17				
02:30		1	22			1	**21**				
02:45		0	24	5	98	0	**31**	1	87	6	185
03:00		0	19			0	**21**				
03:15		2	32			0	**30**				
03:30		0	30			2	19				
03:45		0	34	2	115	0	17	2	87	4	202
04:00		0	40			0	21				
04:15		0	29			0	15				
04:30		1	29			2	19				
04:45		0	32	1	130	5	22	7	77	8	207
05:00		2	31			7	24				
05:15		0	**40**			3	25				
05:30		2	**30**			10	17				
05:45		1	**27**	5	128	7	28	27	94	32	222
06:00		6	**42**			12	16				
06:15		7	29			26	18				
06:30		4	24			23	14				
06:45		8	28	25	123	**35**	25	96	73	121	196
07:00		7	29			**42**	14				
07:15		9	18			**47**	15				
07:30		11	12			**42**	8				
07:45		13	11	40	70	35	8	166	45	206	115
08:00		11	14			27	9				
08:15		16	22			20	3				
08:30		14	22			38	14				
08:45		12	16	53	74	28	7	113	33	166	107
09:00		14	19			22	7				
09:15		15	12			27	6				
09:30		11	11			20	5				
09:45		9	13	49	55	24	6	93	24	142	79
10:00		**19**	13			26	3				
10:15		**14**	11			12	5				
10:30		**16**	3			23	0				
10:45		**19**	6	68	33	16	4	77	12	145	45
11:00		11	8			15	4				
11:15		16	5			14	1				
11:30		16	2			17	3				
11:45		16	3	59	18	17	1	63	9	122	27
Total		321	985	321	985	651	671	651	671	972	1656
Combined Total		1306		1306		1322		1322		2628	
AM Peak		10:00				06:45					
Vol.		68				166					
P.H.F.		0.895				0.883					
PM Peak			05:15				02:30				
Vol.			139				103				
P.H.F.			0.827				0.831				
Percentage		24.6%	75.4%			49.2%	50.8%				
ADT/AADT		ADT 2,628		AADT 2,628							

Counts Unlimited, Inc
PO Box 1178
Corona, CA 92878
(951) 268-6268

City of Riverside
Van Buren Boulevard
E/ Washington Street
24 Hour Directional Volume Count

RIV004
Site Code: 042-11028
Date Start: 10-Feb-11
Date End: 10-Feb-11

Start Time	10-Feb-11 Thu	Eastbound Morning	Eastbound Afternoon	Hour Totals Morning	Hour Totals Afternoon	Westbound Morning	Westbound Afternoon	Hour Totals Morning	Hour Totals Afternoon	Combined Totals Morning	Combined Totals Afternoon
12:00		45	222			19	283				
12:15		53	216			17	228				
12:30		29	266			21	256				
12:45		29	248	156	952	21	232	78	999	234	1951
01:00		31	255			14	228				
01:15		29	281			6	259				
01:30		21	289			12	237				
01:45		19	322	100	1147	19	251	51	975	151	2122
02:00		27	299			22	285				
02:15		19	325			12	**321**				
02:30		33	321			17	**288**				
02:45		18	369	97	1314	12	**356**	63	1250	160	2564
03:00		20	329			31	**343**				
03:15		23	407			33	276				
03:30		25	382			46	308				
03:45		27	374	95	1492	42	274	152	1201	247	2693
04:00		17	382			68	281				
04:15		36	442			105	295				
04:30		41	410			150	270				
04:45		48	399	142	1633	174	328	497	1174	639	2807
05:00		42	**463**			162	310				
05:15		56	**467**			166	280				
05:30		83	**453**			215	297				
05:45		81	**445**	262	1828	188	295	731	1182	993	3010
06:00		104	384			259	239				
06:15		131	364			251	241				
06:30		160	338			348	242				
06:45		206	303	601	1389	387	209	1245	931	1846	2320
07:00		256	287			370	184				
07:15		**304**	286			**467**	177				
07:30		**294**	242			**506**	147				
07:45		**265**	242	1119	1057	**460**	166	1803	674	2922	1731
08:00		**268**	211			**398**	149				
08:15		283	231			414	106				
08:30		205	188			335	132				
08:45		237	182	993	812	316	119	1463	506	2456	1318
09:00		174	181			298	136				
09:15		201	187			254	122				
09:30		212	168			258	83				
09:45		222	140	809	676	235	68	1045	409	1854	1085
10:00		201	118			221	81				
10:15		199	128			244	66				
10:30		227	108			253	70				
10:45		219	94	846	448	226	71	944	288	1790	736
11:00		222	79			210	51				
11:15		240	79			253	41				
11:30		195	65			259	37				
11:45		228	59	885	282	209	35	931	164	1816	446
Total		6105	13030	6105	13030	9003	9753	9003	9753	15108	22783
Combined Total		19135		19135		18756		18756		37891	
AM Peak		07:15				07:15					
Vol.		1131				1831					
P.H.F.		0.930				0.905					
PM Peak			05:00				02:15				
Vol.			1828				1308				
P.H.F.			0.979				0.919				
Percentage		31.9%	68.1%			48.0%	52.0%				
ADT/AADT		ADT 37,891		AADT 37,891							

Counts Unlimited, Inc
PO Box 1178
Corona, CA 92878
(951) 268-6268

City of Riverside
Arlington Avenue
W/ Alessandro Boulevard
24 Hour Directional Volume Count

RIV005
Site Code: 042-11028
Date Start: 09-Feb-11
Date End: 09-Feb-11

Start Time	09-Feb-11 Wed	Eastbound Morning	Eastbound Afternoon	Hour Totals Morning	Hour Totals Afternoon	Westbound Morning	Westbound Afternoon	Hour Totals Morning	Hour Totals Afternoon	Combined Totals Morning	Combined Totals Afternoon
12:00		34	216			14	162				
12:15		30	228			17	200				
12:30		18	201			19	190				
12:45		19	196	101	841	10	237	60	789	161	1630
01:00		16	206			7	209				
01:15		16	223			14	250				
01:30		11	235			7	254				
01:45		11	220	54	884	7	250	35	963	89	1847
02:00		10	251			7	285				
02:15		8	312			8	258				
02:30		11	296			4	280				
02:45		9	292	38	1151	8	386	27	1209	65	2360
03:00		15	351			9	296				
03:15		16	365			15	320				
03:30		8	375			25	304				
03:45		14	382	53	1473	42	314	91	1234	144	2707
04:00		9	350			42	264				
04:15		23	335			53	292				
04:30		32	385			98	287				
04:45		28	**410**	92	1480	92	325	285	1168	377	2648
05:00		45	**388**			92	**337**				
05:15		47	**408**			105	**372**				
05:30		70	**426**			150	**340**				
05:45		86	389	248	1611	124	**334**	471	1383	719	2994
06:00		70	376			139	261				
06:15		86	391			160	257				
06:30		142	334			263	262				
06:45		174	294	472	1395	305	193	867	973	1339	2368
07:00		192	231			**361**	167				
07:15		292	220			**438**	141				
07:30		**324**	205			**459**	111				
07:45		**313**	186	1121	842	**519**	100	1777	519	2898	1361
08:00		**324**	193			333	95				
08:15		**297**	208			378	106				
08:30		257	179			290	113				
08:45		229	216	1107	796	292	110	1293	424	2400	1220
09:00		220	225			220	106				
09:15		173	249			248	91				
09:30		194	138			278	89				
09:45		202	131	789	743	264	68	1010	354	1799	1097
10:00		169	112			270	46				
10:15		174	66			239	57				
10:30		175	61			230	41				
10:45		200	74	718	313	207	39	946	183	1664	496
11:00		212	55			160	32				
11:15		199	38			198	27				
11:30		212	47			217	36				
11:45		242	39	865	179	205	23	780	118	1645	297
Total		5658	11708	5658	11708	7642	9317	7642	9317	13300	21025
Combined Total		17366		17366		16959		16959		34325	
AM Peak		07:30				07:00					
Vol.		1258				1777					
P.H.F.		0.971				0.856					
PM Peak			04:45				05:00				
Vol.			1632				1383				
P.H.F.			0.958				0.929				
Percentage		32.6%	67.4%			45.1%	54.9%				
ADT/AADT		ADT 34,325		AADT 34,325							

Counts Unlimited, Inc
PO Box 1178
Corona, CA 92878
(951) 268-6268

City of Riverside
Berry Road
W/ Trautwein Road
24 Hour Directional Volume Count

RIV006
Site Code: 042-11028
Date Start: 09-Feb-11
Date End: 09-Feb-11

Start Time	09-Feb-11 Wed	Eastbound Morning	Eastbound Afternoon	Hour Totals Morning	Hour Totals Afternoon	Westbound Morning	Westbound Afternoon	Hour Totals Morning	Hour Totals Afternoon	Combined Totals Morning	Combined Totals Afternoon
12:00		1	6			1	9				
12:15		1	7			1	8				
12:30		0	10			1	5				
12:45		0	3	2	26	0	6	3	28	5	54
01:00		0	4			0	7				
01:15		1	7			0	3				
01:30		0	8			0	9				
01:45		0	8	1	27	0	2	0	21	1	48
02:00		0	9			2	5				
02:15		0	14			2	4				
02:30		0	12			0	6				
02:45		2	7	2	42	0	6	4	21	6	63
03:00		0	7			0	10				
03:15		0	**14**			0	11				
03:30		0	**8**			0	6				
03:45		0	**10**	0	39	0	5	0	32	0	71
04:00		0	**12**			0	13				
04:15		1	8			0	15				
04:30		0	5			0	7				
04:45		2	11	3	36	3	14	3	49	6	85
05:00		2	7			1	**20**				
05:15		1	15			2	**12**				
05:30		2	9			0	**16**				
05:45		2	10	7	41	2	**16**	5	64	12	105
06:00		1	4			2	14				
06:15		4	14			1	10				
06:30		6	10			6	11				
06:45		10	13	21	41	4	9	13	44	34	85
07:00		**14**	5			2	16				
07:15		**13**	5			5	7				
07:30		**7**	7			**5**	7				
07:45		**13**	3	47	20	**7**	13	19	43	66	63
08:00		14	5			**6**	7				
08:15		7	9			**9**	5				
08:30		13	5			5	10				
08:45		9	2	43	21	0	5	20	27	63	48
09:00		11	4			6	5				
09:15		8	4			5	4				
09:30		8	2			5	4				
09:45		8	1	35	11	2	1	18	14	53	25
10:00		5	4			11	2				
10:15		9	0			2	3				
10:30		4	3			2	4				
10:45		7	0	25	7	10	3	25	12	50	19
11:00		10	1			2	6				
11:15		2	1			6	0				
11:30		1	1			5	1				
11:45		12	0	25	3	4	2	17	9	42	12
Total		211	314	211	314	127	364	127	364	338	678
Combined Total		525		525		491		491		1016	
AM Peak		07:00				07:30					
Vol.		47				27					
P.H.F.		0.839				0.750					
PM Peak			03:15				05:00				
Vol.			44				64				
P.H.F.			0.786				0.800				
Percentage		40.2%	59.8%			25.9%	74.1%				
ADT/AADT		ADT 1,016		AADT 1,016							

Counts Unlimited, Inc
PO Box 1178
Corona, CA 92878
(951) 268-6268

City of Riverside
Van Buren Boulevard
W/ Trautwein Road
24 Hour Directional Volume Count

RIV007
Site Code: 042-11028
Date Start: 10-Feb-11
Date End: 10-Feb-11

Start Time	10-Feb-11 Thu	Eastbound Morning	Eastbound Afternoon	Hour Totals Morning	Hour Totals Afternoon	Westbound Morning	Westbound Afternoon	Hour Totals Morning	Hour Totals Afternoon	Combined Totals Morning	Combined Totals Afternoon
12:00		34	209			22	267				
12:15		46	227			19	221				
12:30		24	224			19	227				
12:45		21	247	125	907	19	189	79	904	204	1811
01:00		19	218			14	207				
01:15		32	221			7	277				
01:30		18	289			14	203				
01:45		14	294	83	1022	11	232	46	919	129	1941
02:00		16	287			18	**284**				
02:15		19	257			9	**320**				
02:30		18	295			14	**293**				
02:45		21	395	74	1234	15	**344**	56	1241	130	2475
03:00		15	378			26	282				
03:15		21	372			28	261				
03:30		25	359			27	273				
03:45		29	321	90	1430	36	271	117	1087	207	2517
04:00		19	376			47	260				
04:15		29	366			71	307				
04:30		52	332			105	259				
04:45		50	**390**	150	1464	128	342	351	1168	501	2632
05:00		40	**384**			122	260				
05:15		57	**406**			121	272				
05:30		89	**431**			173	268				
05:45		82	381	268	1602	159	270	575	1070	843	2672
06:00		88	377			194	242				
06:15		152	308			193	286				
06:30		141	329			311	235				
06:45		191	297	572	1311	**307**	206	1005	969	1577	2280
07:00		239	296			**342**	189				
07:15		248	245			**482**	185				
07:30		**279**	245			**424**	136				
07:45		**300**	218	1066	1004	302	153	1550	663	2616	1667
08:00		**232**	241			334	153				
08:15		**267**	209			307	133				
08:30		199	176			237	122				
08:45		195	167	893	793	293	112	1171	520	2064	1313
09:00		163	166			260	125				
09:15		198	157			194	106				
09:30		186	166			222	98				
09:45		210	141	757	630	180	81	856	410	1613	1040
10:00		199	98			186	65				
10:15		173	122			182	58				
10:30		206	92			221	66				
10:45		186	72	764	384	198	71	787	260	1551	644
11:00		204	68			194	50				
11:15		212	82			225	39				
11:30		205	39			265	32				
11:45		229	72	850	261	219	31	903	152	1753	413
Total		5692	12042	5692	12042	7496	9363	7496	9363	13188	21405
Combined Total		17734		17734		16859		16859		34593	
AM Peak		07:30				06:45					
Vol.		1078				1555					
P.H.F.		0.898				0.807					
PM Peak			04:45				02:00				
Vol.			1611				1241				
P.H.F.			0.934				0.902				
Percentage		32.1%	67.9%			44.5%	55.5%				
ADT/AADT		ADT 34,593		AADT 34,593							

Counts Unlimited, Inc
PO Box 1178
Corona, CA 92878
(951) 268-6268

City of Riverside
Central Avenue
W/ Lochmoor Drive
24 Hour Directional Volume Count

RIV008
Site Code: 042-11028
Date Start: 09-Feb-11
Date End: 09-Feb-11

Start Time	09-Feb-11 Wed	Eastbound Morning	Eastbound Afternoon	Hour Totals Morning	Hour Totals Afternoon	Westbound Morning	Westbound Afternoon	Hour Totals Morning	Hour Totals Afternoon	Combined Totals Morning	Combined Totals Afternoon
12:00		23	106			15	102				
12:15		18	127			24	127				
12:30		16	102			10	163				
12:45		9	138	66	473	10	155	59	547	125	1020
01:00		16	121			10	144				
01:15		15	119			10	127				
01:30		5	117			7	120				
01:45		7	136	43	493	8	126	35	517	78	1010
02:00		4	131			4	108				
02:15		3	128			1	140				
02:30		7	154			3	153				
02:45		8	158	22	571	11	166	19	567	41	1138
03:00		7	191			4	126				
03:15		9	185			7	151				
03:30		7	188			11	131				
03:45		7	200	30	764	13	179	35	587	65	1351
04:00		7	170			5	136				
04:15		6	218			12	158				
04:30		12	197			25	167				
04:45		22	247	47	832	17	158	59	619	106	1451
05:00		14	**243**			22	141				
05:15		26	**276**			29	**184**				
05:30		19	**260**			41	**190**				
05:45		29	**285**	88	1064	46	**183**	138	698	226	1762
06:00		35	239			58	**147**				
06:15		53	204			64	159				
06:30		79	196			120	129				
06:45		86	159	253	798	149	101	391	536	644	1334
07:00		119	128			162	91				
07:15		**138**	133			180	84				
07:30		**151**	115			**211**	76				
07:45		**174**	93	582	469	**226**	76	779	327	1361	796
08:00		**159**	95			**165**	83				
08:15		115	139			**182**	68				
08:30		147	132			152	61				
08:45		130	135	551	501	125	68	624	280	1175	781
09:00		100	137			119	80				
09:15		94	135			118	76				
09:30		82	61			158	57				
09:45		81	61	357	394	172	50	567	263	924	657
10:00		110	53			140	43				
10:15		86	38			86	26				
10:30		85	28			104	28				
10:45		99	34	380	153	104	35	434	132	814	285
11:00		87	33			107	27				
11:15		96	22			112	22				
11:30		107	19			96	24				
11:45		106	22	396	96	105	15	420	88	816	184
Total		2815	6608	2815	6608	3560	5161	3560	5161	6375	11769
Combined Total		9423		9423		8721		8721		18144	
AM Peak		07:15				07:30					
Vol.		622				784					
P.H.F.		0.894				0.867					
PM Peak			05:00				05:15				
Vol.			1064				704				
P.H.F.			0.933				0.926				
Percentage		29.9%	70.1%			40.8%	59.2%				
ADT/AADT		ADT 18,144		AADT 18,144							

Counts Unlimited, Inc
PO Box 1178
Corona, CA 92878
(951) 268-6268

City of Riverside
Alessandro Boulevard
W/ Sycamore Canyon Road
24 Hour Directional Volume Count

RIV009
Site Code: 042-11028
Date Start: 09-Feb-11
Date End: 09-Feb-11

Start Time	09-Feb-11 Wed	Eastbound Morning	Eastbound Afternoon	Hour Totals Morning	Hour Totals Afternoon	Westbound Morning	Westbound Afternoon	Hour Totals Morning	Hour Totals Afternoon	Combined Totals Morning	Combined Totals Afternoon
12:00		39	240			32	260				
12:15		42	285			26	254				
12:30		34	245			20	222				
12:45		24	251	139	1021	13	240	91	976	230	1997
01:00		17	242			11	278				
01:15		24	262			22	296				
01:30		14	225			28	269				
01:45		18	251	73	980	14	283	75	1126	148	2106
02:00		21	262			13	248				
02:15		18	248			15	323				
02:30		17	319			12	326				
02:45		17	299	73	1128	15	314	55	1211	128	2339
03:00		24	362			20	316				
03:15		16	331			24	306				
03:30		15	373			36	315				
03:45		24	388	79	1454	48	314	128	1251	207	2705
04:00		28	354			63	353				
04:15		41	387			67	346				
04:30		48	410			98	**369**				
04:45		57	421	174	1572	101	**364**	329	1432	503	3004
05:00		68	453			97	**435**				
05:15		75	**448**			127	**392**				
05:30		98	**502**			147	357				
05:45		143	**441**	384	1844	185	352	556	1536	940	3380
06:00		111	**459**			151	291				
06:15		151	362			228	309				
06:30		176	344			329	260				
06:45		214	277	652	1442	380	230	1088	1090	1740	2532
07:00		235	244			371	197				
07:15		261	251			**429**	179				
07:30		**280**	208			**475**	154				
07:45		**294**	178	1070	881	**383**	142	1658	672	2728	1553
08:00		**280**	160			**391**	148				
08:15		**304**	159			361	149				
08:30		279	211			294	126				
08:45		246	228	1109	758	255	131	1301	554	2410	1312
09:00		230	236			211	101				
09:15		220	225			205	116				
09:30		248	132			265	109				
09:45		243	124	941	717	289	112	970	438	1911	1155
10:00		194	117			303	78				
10:15		245	78			248	73				
10:30		204	69			243	75				
10:45		246	47	889	311	256	51	1050	277	1939	588
11:00		221	70			218	44				
11:15		280	63			248	44				
11:30		227	54			243	42				
11:45		241	41	969	228	219	36	928	166	1897	394
Total		6552	12336	6552	12336	8229	10729	8229	10729	14781	23065
Combined Total		18888		18888		18958		18958		37846	
AM Peak		07:30				07:15					
Vol.		1158				1678					
P.H.F.		0.952				0.883					
PM Peak			05:15				04:30				
Vol.			1850				1560				
P.H.F.			0.921				0.897				
Percentage		34.7%	65.3%			43.4%	56.6%				
ADT/AADT		ADT 37,846		AADT 37,846							

Counts Unlimited, Inc
PO Box 1178
Corona, CA 92878
(951) 268-6268

City of Riverside
Van Buren Boulevard
W/ Plummer Street
24 Hour Directional Volume Count

RIV010
Site Code: 042-11028
Date Start: 09-Feb-11
Date End: 09-Feb-11

Start Time	09-Feb-11 Wed	Eastbound Morning	Eastbound Afternoon	Hour Totals Morning	Hour Totals Afternoon	Westbound Morning	Westbound Afternoon	Hour Totals Morning	Hour Totals Afternoon	Combined Totals Morning	Combined Totals Afternoon
12:00		23	212			26	199				
12:15		30	221			29	220				
12:30		19	226			24	220				
12:45		18	197	90	856	22	214	101	853	191	1709
01:00		18	175			17	218				
01:15		17	179			19	239				
01:30		21	197			9	256				
01:45		25	189	81	740	10	256	55	969	136	1709
02:00		13	212			13	277				
02:15		16	226			16	233				
02:30		13	239			24	251				
02:45		14	273	56	950	16	266	69	1027	125	1977
03:00		16	285			23	271				
03:15		18	250			20	293				
03:30		33	271			25	263				
03:45		31	272	98	1078	26	257	94	1084	192	2162
04:00		40	259			45	268				
04:15		61	296			56	266				
04:30		76	309			79	**315**				
04:45		76	272	253	1136	86	**316**	266	1165	519	2301
05:00		87	275			77	**280**				
05:15		121	**304**			102	**324**				
05:30		126	**309**			124	278				
05:45		118	**306**	452	1194	161	264	464	1146	916	2340
06:00		154	**291**			159	294				
06:15		184	230			194	220				
06:30		180	213			261	203				
06:45		247	213	765	947	251	181	865	898	1630	1845
07:00		**222**	201			**326**	182				
07:15		**304**	158			**342**	152				
07:30		**305**	145			**300**	155				
07:45		**291**	123	1122	627	**311**	148	1279	637	2401	1264
08:00		215	134			231	134				
08:15		231	135			235	149				
08:30		200	113			250	128				
08:45		235	106	881	488	200	126	916	537	1797	1025
09:00		187	103			175	120				
09:15		194	131			154	97				
09:30		175	99			188	105				
09:45		159	86	715	419	180	78	697	400	1412	819
10:00		166	95			169	69				
10:15		178	71			187	84				
10:30		218	62			182	59				
10:45		223	66	785	294	190	59	728	271	1513	565
11:00		212	33			183	55				
11:15		203	29			203	39				
11:30		163	45			212	36				
11:45		182	39	760	146	192	33	790	163	1550	309
Total		6058	8875	6058	8875	6324	9150	6324	9150	12382	18025
Combined Total		14933		14933		15474		15474		30407	
AM Peak		07:00				07:00					
Vol.		1122				1279					
P.H.F.		0.920				0.935					
PM Peak			05:15				04:30				
Vol.			1210				1235				
P.H.F.			0.979				0.953				
Percentage		40.6%	59.4%			40.9%	59.1%				
ADT/AADT		ADT 30,407		AADT 30,407							

Counts Unlimited, Inc
PO Box 1178
Corona, CA 92878
(951) 268-6268

City of Riverside
Washington Street
S/ Victoria Avenue
24 Hour Directional Volume Count

RIV011
Site Code: 042-11028
Date Start: 10-Feb-11
Date End: 10-Feb-11

Start Time	10-Feb-11 Thu	Northbound Morning	Northbound Afternoon	Hour Totals Morning	Hour Totals Afternoon	Southbound Morning	Southbound Afternoon	Hour Totals Morning	Hour Totals Afternoon	Combined Totals Morning	Combined Totals Afternoon
12:00		3	113			22	130				
12:15		6	118			12	109				
12:30		2	126			6	104				
12:45		4	120	15	477	7	119	47	462	62	939
01:00		5	115			10	116				
01:15		2	120			6	126				
01:30		3	101			9	113				
01:45		5	117	15	453	7	146	32	501	47	954
02:00		0	113			3	127				
02:15		3	143			4	121				
02:30		2	132			4	126				
02:45		5	**148**	10	536	3	137	14	511	24	1047
03:00		6	**141**			3	163				
03:15		1	**152**			3	182				
03:30		7	**134**			3	174				
03:45		9	112	23	539	3	171	12	690	35	1229
04:00		14	131			7	169				
04:15		15	111			8	155				
04:30		23	122			9	169				
04:45		38	133	90	497	5	196	29	689	119	1186
05:00		38	147			7	196				
05:15		56	122			12	**225**				
05:30		57	112			14	**209**				
05:45		59	125	210	506	17	**209**	50	839	260	1345
06:00		61	112			18	**203**				
06:15		129	106			28	159				
06:30		151	91			55	125				
06:45		201	96	542	405	69	121	170	608	712	1013
07:00		220	62			61	125				
07:15		**283**	64			85	119				
07:30		**282**	43			76	94				
07:45		**294**	49	1079	218	93	88	315	426	1394	644
08:00		**235**	64			116	95				
08:15		238	41			93	100				
08:30		200	33			82	93				
08:45		176	40	849	178	61	83	352	371	1201	549
09:00		181	37			70	69				
09:15		153	40			79	82				
09:30		177	36			79	80				
09:45		142	39	653	152	77	69	305	300	958	452
10:00		140	27			87	59				
10:15		137	15			90	55				
10:30		122	26			76	37				
10:45		122	23	521	91	**102**	27	355	178	876	269
11:00		103	18			**90**	25				
11:15		136	18			**108**	21				
11:30		120	12			**97**	27				
11:45		143	11	502	59	93	23	388	96	890	155
Total		4509	4111	4509	4111	2069	5671	2069	5671	6578	9782
Combined Total		8620		8620		7740		7740		16360	
AM Peak		07:15				10:45					
Vol.		1094				397					
P.H.F.		0.930				0.856					
PM Peak			02:45				05:15				
Vol.			575				846				
P.H.F.			0.946				0.940				
Percentage		52.3%	47.7%			26.7%	73.3%				
ADT/AADT		ADT 16,360		AADT 16,360							

Counts Unlimited, Inc
PO Box 1178
Corona, CA 92878
(951) 268-6268

City of Riverside
Alessandro Boulevard
S/ Arlington Avenue
24 Hour Directional Volume Count

RIV012
Site Code: 042-11028
Date Start: 09-Feb-11
Date End: 09-Feb-11

Start Time	09-Feb-11 Wed	Northbound Morning	Northbound Afternoon	Hour Totals Morning	Hour Totals Afternoon	Southbound Morning	Southbound Afternoon	Hour Totals Morning	Hour Totals Afternoon	Combined Totals Morning	Combined Totals Afternoon
12:00		23	232			39	314				
12:15		17	266			34	311				
12:30		15	289			34	283				
12:45		9	286	64	1073	29	265	136	1173	200	2246
01:00		15	309			24	260				
01:15		15	302			40	292				
01:30		16	280			25	290				
01:45		12	305	58	1196	10	329	99	1171	157	2367
02:00		11	350			15	342				
02:15		17	347			22	377				
02:30		11	340			16	370				
02:45		18	415	57	1452	9	430	62	1519	119	2971
03:00		14	335			22	428				
03:15		28	400			15	499				
03:30		43	381			16	527				
03:45		51	343	136	1459	24	528	77	1982	213	3441
04:00		77	285			20	549				
04:15		97	304			26	550				
04:30		123	339			41	572				
04:45		137	**409**	434	1337	30	**670**	117	2341	551	3678
05:00		153	**380**			64	**618**				
05:15		180	**374**			70	**733**				
05:30		226	**387**			105	**705**				
05:45		213	386	772	1527	104	654	343	2710	1115	4237
06:00		273	302			102	617				
06:15		369	311			111	575				
06:30		527	288			174	483				
06:45		606	227	1775	1128	213	386	600	2061	2375	3189
07:00		**651**	184			204	366				
07:15		**754**	192			232	303				
07:30		**854**	153			**284**	283				
07:45		**725**	139	2984	668	**269**	283	989	1235	3973	1903
08:00		580	120			**286**	310				
08:15		602	152			**269**	306				
08:30		533	144			258	316				
08:45		477	110	2192	526	232	334	1045	1266	3237	1792
09:00		341	105			241	331				
09:15		382	99			186	276				
09:30		410	99			224	179				
09:45		383	84	1516	387	218	183	869	969	2385	1356
10:00		357	65			225	133				
10:15		354	70			211	103				
10:30		313	60			211	84				
10:45		263	47	1287	242	261	87	908	407	2195	649
11:00		280	42			255	74				
11:15		324	34			261	53				
11:30		293	46			270	64				
11:45		268	31	1165	153	288	57	1074	248	2239	401
Total		12440	11148	12440	11148	6319	17082	6319	17082	18759	28230
Combined Total		23588		23588		23401		23401		46989	
AM Peak		07:00				07:30					
Vol.		2984				1108					
P.H.F.		0.874				0.969					
PM Peak			04:45				04:45				
Vol.			1550				2726				
P.H.F.			0.947				0.930				
Percentage		52.7%	47.3%			27.0%	73.0%				
ADT/AADT		ADT 46,989		AADT 46,989							

Counts Unlimited, Inc
PO Box 1178
Corona, CA 92878
(951) 268-6268

City of Riverside
Canyon Crest Drive
S/ Central Avenue
24 Hour Directional Volume Count

RIV013
Site Code: 042-11028
Date Start: 09-Feb-11
Date End: 09-Feb-11

Start Time	09-Feb-11 Wed	Northbound Morning	Northbound Afternoon	Hour Totals Morning	Hour Totals Afternoon	Southbound Morning	Southbound Afternoon	Hour Totals Morning	Hour Totals Afternoon	Combined Totals Morning	Combined Totals Afternoon
12:00		9	102			14	128				
12:15		8	103			21	127				
12:30		7	121			15	107				
12:45		7	131	31	457	21	90	71	452	102	909
01:00		7	122			10	113				
01:15		5	97			6	110				
01:30		4	101			13	120				
01:45		6	117	22	437	3	143	32	486	54	923
02:00		6	112			5	109				
02:15		3	107			7	154				
02:30		5	101			4	143				
02:45		7	144	21	464	7	145	23	551	44	1015
03:00		10	113			3	139				
03:15		8	121			4	158				
03:30		7	117			2	159				
03:45		7	114	32	465	6	159	15	615	47	1080
04:00		14	123			2	167				
04:15		14	110			1	189				
04:30		20	**115**			7	218				
04:45		41	**146**	89	494	2	233	12	807	101	1301
05:00		44	**129**			8	232				
05:15		67	**116**			10	**258**				
05:30		70	113			12	**242**				
05:45		70	123	251	481	21	**268**	51	1000	302	1481
06:00		75	113			13	**252**				
06:15		132	116			19	207				
06:30		196	107			44	166				
06:45		239	97	642	433	57	178	133	803	775	1236
07:00		**273**	87			56	156				
07:15		**307**	63			83	134				
07:30		**367**	71			71	109				
07:45		**377**	48	1324	269	79	111	289	510	1613	779
08:00		261	58			73	128				
08:15		256	54			88	116				
08:30		257	51			78	92				
08:45		213	56	987	219	85	107	324	443	1311	662
09:00		169	54			69	96				
09:15		133	51			71	112				
09:30		159	31			64	73				
09:45		149	30	610	166	71	68	275	349	885	515
10:00		114	27			85	74				
10:15		130	24			64	48				
10:30		112	14			71	40				
10:45		114	15	470	80	68	34	288	196	758	276
11:00		98	19			**79**	36				
11:15		110	11			**132**	28				
11:30		108	13			**92**	20				
11:45		117	13	433	56	**106**	17	409	101	842	157
Total		4912	4021	4912	4021	1922	6313	1922	6313	6834	10334
Combined Total		8933		8933		8235		8235		17168	
AM Peak		07:00				11:00					
Vol.		1324				409					
P.H.F.		0.878				0.775					
PM Peak			04:30				05:15				
Vol.			506				1020				
P.H.F.			0.866				0.951				
Percentage		55.0%	45.0%			23.3%	76.7%				
ADT/AADT		ADT 17,168		AADT 17,168							

Counts Unlimited, Inc
PO Box 1178
Corona, CA 92878
(951) 268-6268

City of Riverside
Washington Street
N/ Valle Vista Way
24 Hour Directional Volume Count

RIV014
Site Code: 042-11028
Date Start: 10-Feb-11
Date End: 10-Feb-11

Start Time	10-Feb-11 Thu	Northbound Morning	Northbound Afternoon	Hour Totals Morning	Hour Totals Afternoon	Southbound Morning	Southbound Afternoon	Hour Totals Morning	Hour Totals Afternoon	Combined Totals Morning	Combined Totals Afternoon
12:00		2	89			19	112				
12:15		1	107			12	107				
12:30		4	96			5	95				
12:45		2	92	9	384	6	107	42	421	51	805
01:00		3	85			7	88				
01:15		1	90			4	119				
01:30		2	80			7	127				
01:45		3	91	9	346	6	121	24	455	33	801
02:00		2	105			4	118				
02:15		3	115			6	122				
02:30		1	101			3	115				
02:45		3	**150**	9	471	5	148	18	503	27	974
03:00		3	**112**			4	138				
03:15		1	**117**			0	195				
03:30		5	**121**			6	173				
03:45		8	95	17	445	4	168	14	674	31	1119
04:00		14	112			7	173				
04:15		14	110			8	180				
04:30		29	97			11	173				
04:45		32	128	89	447	7	**197**	33	723	122	1170
05:00		36	132			8	**218**				
05:15		43	100			15	**240**				
05:30		51	103			18	**211**				
05:45		76	103	206	438	19	189	60	858	266	1296
06:00		79	88			23	190				
06:15		138	88			34	133				
06:30		180	85			60	108				
06:45		197	68	594	329	73	116	190	547	784	876
07:00		214	58			70	104				
07:15		**250**	62			84	113				
07:30		**318**	31			66	88				
07:45		**274**	47	1056	198	**85**	81	305	386	1361	584
08:00		**217**	40			**119**	93				
08:15		199	32			**86**	76				
08:30		185	25			**77**	74				
08:45		178	37	779	134	67	78	349	321	1128	455
09:00		158	40			72	61				
09:15		112	35			73	53				
09:30		122	26			80	58				
09:45		120	29	512	130	76	57	301	229	813	359
10:00		108	25			71	47				
10:15		106	14			88	34				
10:30		107	23			69	27				
10:45		84	18	405	80	86	23	314	131	719	211
11:00		115	13			81	17				
11:15		83	13			98	18				
11:30		116	13			90	15				
11:45		104	6	418	45	84	14	353	64	771	109
Total		4103	3447	4103	3447	2003	5312	2003	5312	6106	8759
Combined Total		7550		7550		7315		7315		14865	
AM Peak		07:15				07:45					
Vol.		1059				367					
P.H.F.		0.833				0.771					
PM Peak			02:45				04:45				
Vol.			500				866				
P.H.F.			0.833				0.902				
Percentage		54.3%	45.7%			27.4%	72.6%				
ADT/AADT		ADT 14,865		AADT 14,865							

Counts Unlimited, Inc
PO Box 1178
Corona, CA 92878
(951) 268-6268

City of Riverside
Golden Star Avenue
N/ Valle Vista Way
24 Hour Directional Volume Count

RIV015
Site Code: 042-11028
Date Start: 09-Feb-11
Date End: 09-Feb-11

Start Time	09-Feb-11 Wed	Northbound Morning	Northbound Afternoon	Hour Totals Morning	Hour Totals Afternoon	Southbound Morning	Southbound Afternoon	Hour Totals Morning	Hour Totals Afternoon	Combined Totals Morning	Combined Totals Afternoon
12:00		0	**7**			0	7				
12:15		0	**6**			1	5				
12:30		0	**4**			0	3				
12:45		0	**9**	0	26	0	4	1	19	1	45
01:00		0	3			0	8				
01:15		0	6			0	7				
01:30		0	2			0	7				
01:45		0	8	0	19	0	2	0	24	0	43
02:00		0	3			0	6				
02:15		0	6			1	1				
02:30		0	7			0	6				
02:45		0	9	0	25	0	10	1	23	1	48
03:00		0	3			0	5				
03:15		0	5			1	4				
03:30		0	4			0	3				
03:45		0	7	0	19	0	6	1	18	1	37
04:00		0	8			0	5				
04:15		0	3			0	5				
04:30		0	4			2	6				
04:45		2	6	2	21	0	7	2	23	4	44
05:00		0	10			1	**10**				
05:15		2	4			0	**7**				
05:30		0	6			1	**9**				
05:45		1	6	3	26	0	**11**	2	37	5	63
06:00		1	7			3	6				
06:15		1	4			2	3				
06:30		5	5			3	1				
06:45		3	2	10	18	6	4	14	14	24	32
07:00		4	5			**10**	3				
07:15		**7**	5			**6**	1				
07:30		**11**	4			**4**	1				
07:45		**4**	7	26	21	**9**	1	29	6	55	27
08:00		**9**	3			7	0				
08:15		3	4			4	8				
08:30		10	4			5	1				
08:45		3	4	25	15	6	3	22	12	47	27
09:00		4	3			4	5				
09:15		4	4			2	3				
09:30		7	2			6	2				
09:45		5	2	20	11	2	4	14	14	34	25
10:00		5	1			4	0				
10:15		2	0			2	4				
10:30		6	2			3	0				
10:45		3	1	16	4	10	0	19	4	35	8
11:00		5	1			4	1				
11:15		9	1			5	0				
11:30		10	0			4	1				
11:45		4	1	28	3	7	1	20	3	48	6
Total		130	208	130	208	125	197	125	197	255	405
Combined Total		338		338		322		322		660	
AM Peak		07:15				07:00					
Vol.		31				29					
P.H.F.		0.705				0.725					
PM Peak			12:00				05:00				
Vol.			26				37				
P.H.F.			0.722				0.841				
Percentage		38.5%	61.5%			38.8%	61.2%				
ADT/AADT		ADT 660		AADT 660							

Counts Unlimited, Inc
PO Box 1178
Corona, CA 92878
(951) 268-6268

City of Riverside
Dauchy Avenue
N/ John F Kennedy Drive
24 Hour Directional Volume Count

RIV016
Site Code: 042-11028
Date Start: 09-Feb-11
Date End: 09-Feb-11

Start Time	09-Feb-11 Wed	Northbound Morning	Northbound Afternoon	Hour Totals Morning	Hour Totals Afternoon	Southbound Morning	Southbound Afternoon	Hour Totals Morning	Hour Totals Afternoon	Combined Totals Morning	Combined Totals Afternoon
12:00		0	9			0	5				
12:15		0	7			0	7				
12:30		1	9			1	4				
12:45		1	5	2	30	0	9	1	25	3	55
01:00		0	12			0	6				
01:15		0	12			1	10				
01:30		0	14			0	8				
01:45		0	12	0	50	2	9	3	33	3	83
02:00		0	21			1	12				
02:15		1	9			2	17				
02:30		0	13			0	11				
02:45		0	**30**	1	73	0	10	3	50	4	123
03:00		0	**24**			0	16				
03:15		0	**19**			0	20				
03:30		0	**23**			2	13				
03:45		0	20	0	86	1	10	3	59	3	145
04:00		1	12			3	13				
04:15		2	11			1	16				
04:30		0	13			1	15				
04:45		1	13	4	49	1	10	6	54	10	103
05:00		0	12			4	**15**				
05:15		1	21			3	**15**				
05:30		4	16			1	**19**				
05:45		1	16	6	65	2	**15**	10	64	16	129
06:00		6	10			4	12				
06:15		6	12			3	14				
06:30		8	9			10	6				
06:45		11	6	31	37	5	10	22	42	53	79
07:00		15	6			14	8				
07:15		**30**	18			18	2				
07:30		**41**	15			16	6				
07:45		**36**	11	122	50	**18**	7	66	23	188	73
08:00		**30**	11			**15**	3				
08:15		18	11			**17**	5				
08:30		13	9			**18**	3				
08:45		11	7	72	38	13	3	63	14	135	52
09:00		9	5			9	4				
09:15		3	5			9	3				
09:30		6	5			13	4				
09:45		8	4	26	19	8	0	39	11	65	30
10:00		9	2			11	1				
10:15		6	2			4	2				
10:30		13	5			8	0				
10:45		11	3	39	12	2	4	25	7	64	19
11:00		13	3			5	0				
11:15		5	0			5	1				
11:30		9	1			6	0				
11:45		10	2	37	6	9	1	25	2	62	8
Total		340	515	340	515	266	384	266	384	606	899
Combined Total		855		855		650		650		1505	
AM Peak		07:15				07:45					
Vol.		137				68					
P.H.F.		0.835				0.944					
PM Peak			02:45				05:00				
Vol.			96				64				
P.H.F.			0.800				0.800				
Percentage		39.8%	60.2%			40.9%	59.1%				
ADT/AADT		ADT 1,505		AADT 1,505							

Counts Unlimited, Inc
PO Box 1178
Corona, CA 92878
(951) 268-6268

City of Riverside
Trautwein Road
N/ John F Kennedy Drive
24 Hour Directional Volume Count

RIV017
Site Code: 042-11028
Date Start: 09-Feb-11
Date End: 09-Feb-11

Start Time	09-Feb-11 Wed	Northbound Morning	Northbound Afternoon	Hour Totals Morning	Hour Totals Afternoon	Southbound Morning	Southbound Afternoon	Hour Totals Morning	Hour Totals Afternoon	Combined Totals Morning	Combined Totals Afternoon
12:00		11	258			29	212				
12:15		12	237			26	281				
12:30		14	260			23	224				
12:45		8	232	45	987	16	239	94	956	139	1943
01:00		11	225			15	223				
01:15		7	236			13	237				
01:30		4	224			14	252				
01:45		7	221	29	906	11	342	53	1054	82	1960
02:00		12	316			12	332				
02:15		7	264			11	380				
02:30		7	**319**			11	346				
02:45		10	**433**	36	1332	6	359	40	1417	76	2749
03:00		5	**365**			13	298				
03:15		15	**310**			5	350				
03:30		21	254			6	344				
03:45		24	271	65	1200	18	375	42	1367	107	2567
04:00		30	258			8	363				
04:15		40	239			13	429				
04:30		53	277			12	388				
04:45		65	284	188	1058	16	455	49	1635	237	2693
05:00		74	278			17	455				
05:15		110	285			27	474				
05:30		120	294			27	**506**				
05:45		139	275	443	1132	51	**535**	122	1970	565	3102
06:00		177	296			52	**492**				
06:15		240	243			68	**495**				
06:30		353	248			122	360				
06:45		388	216	1158	1003	170	358	412	1705	1570	2708
07:00		**492**	217			**281**	313				
07:15		**597**	176			**323**	291				
07:30		**632**	125			**253**	207				
07:45		**464**	132	2185	650	**226**	243	1083	1054	3268	1704
08:00		464	146			212	258				
08:15		435	221			245	236				
08:30		438	166			199	214				
08:45		349	112	1686	645	165	215	821	923	2507	1568
09:00		277	110			157	186				
09:15		286	120			142	174				
09:30		311	76			158	148				
09:45		247	68	1121	374	163	126	620	634	1741	1008
10:00		209	56			193	105				
10:15		225	59			167	91				
10:30		230	35			159	78				
10:45		216	22	880	172	214	64	733	338	1613	510
11:00		238	32			184	52				
11:15		231	32			233	45				
11:30		220	25			232	48				
11:45		204	14	893	103	259	42	908	187	1801	290
Total		8729	9562	8729	9562	4977	13240	4977	13240	13706	22802
Combined Total		18291		18291		18217		18217		36508	
AM Peak		07:00				07:00					
Vol.		2185				1083					
P.H.F.		0.864				0.838					
PM Peak			02:30				05:30				
Vol.			1427				2028				
P.H.F.			0.824				0.948				
Percentage		47.7%	52.3%			27.3%	72.7%				
ADT/AADT		ADT 36,508		AADT 36,508							

Counts Unlimited, Inc
PO Box 1178
Corona, CA 92878
(951) 268-6268

City of Riverside
Washington Street
N/ Van Buren Boulevard
24 Hour Directional Volume Count

RIV018
Site Code: 042-11028
Date Start: 10-Feb-11
Date End: 10-Feb-11

Start Time	10-Feb-11 Thu	Northbound Morning	Northbound Afternoon	Hour Totals Morning	Hour Totals Afternoon	Southbound Morning	Southbound Afternoon	Hour Totals Morning	Hour Totals Afternoon	Combined Totals Morning	Combined Totals Afternoon
12:00		5	103			16	107				
12:15		3	115			13	117				
12:30		5	107			3	99				
12:45		3	105	16	430	10	123	42	446	58	876
01:00		4	90			4	87				
01:15		1	94			4	114				
01:30		1	97			5	121				
01:45		3	99	9	380	4	126	17	448	26	828
02:00		3	122			3	130				
02:15		4	117			6	132				
02:30		2	106			4	141				
02:45		2	**177**	11	522	4	146	17	549	28	1071
03:00		3	**141**			5	147				
03:15		2	**130**			0	187				
03:30		3	**123**			5	176				
03:45		9	115	17	509	4	158	14	668	31	1177
04:00		15	125			9	176				
04:15		10	121			9	184				
04:30		29	110			13	180				
04:45		31	147	85	503	9	**195**	40	735	125	1238
05:00		39	129			8	**227**				
05:15		39	124			14	**223**				
05:30		45	113			24	**217**				
05:45		76	114	199	480	19	188	65	855	264	1335
06:00		79	91			29	179				
06:15		123	103			39	156				
06:30		183	97			73	111				
06:45		182	71	567	362	84	107	225	553	792	915
07:00		189	72			90	89				
07:15		**256**	72			108	112				
07:30		**298**	36			96	87				
07:45		**259**	56	1002	236	**94**	82	388	370	1390	606
08:00		**224**	46			**115**	84				
08:15		199	47			**129**	88				
08:30		193	39			**106**	66				
08:45		163	33	779	165	82	68	432	306	1211	471
09:00		143	59			75	71				
09:15		105	54			77	55				
09:30		123	29			89	48				
09:45		121	33	492	175	89	51	330	225	822	400
10:00		104	31			79	49				
10:15		104	14			90	35				
10:30		94	33			79	28				
10:45		82	21	384	99	89	19	337	131	721	230
11:00		105	19			103	17				
11:15		87	11			96	23				
11:30		103	13			87	14				
11:45		108	8	403	51	95	12	381	66	784	117
Total		3964	3912	3964	3912	2288	5352	2288	5352	6252	9264
Combined Total		7876		7876		7640		7640		15516	
AM Peak		07:15				07:45					
Vol.		1037				444					
P.H.F.		0.870				0.860					
PM Peak			02:45				04:45				
Vol.			571				862				
P.H.F.			0.806				0.949				
Percentage		50.3%	49.7%			29.9%	70.1%				
ADT/AADT		ADT 15,516		AADT 15,516							

Counts Unlimited, Inc
PO Box 1178
Corona, CA 92878
(951) 268-6268

City of Riverside
Wood Drive
N/ Van Buren Boulevard
24 Hour Directional Volume Count

RIV019
Site Code: 042-11028
Date Start: 10-Feb-11
Date End: 10-Feb-11

Start Time	10-Feb-11 Thu	Northbound Morning	Northbound Afternoon	Hour Totals Morning	Hour Totals Afternoon	Southbound Morning	Southbound Afternoon	Hour Totals Morning	Hour Totals Afternoon	Combined Totals Morning	Combined Totals Afternoon
12:00		2	51			3	47				
12:15		1	68			1	54				
12:30		4	55			3	57				
12:45		0	40	7	214	1	63	8	221	15	435
01:00		2	61			0	61				
01:15		3	55			0	65				
01:30		0	85			3	74				
01:45		2	77	7	278	1	70	4	270	11	548
02:00		1	94			2	74				
02:15		3	87			2	100				
02:30		1	**134**			3	131				
02:45		2	**166**	7	481	2	142	9	447	16	928
03:00		1	**123**			1	111				
03:15		2	**92**			0	112				
03:30		2	87			2	82				
03:45		2	74	7	376	2	97	5	402	12	778
04:00		4	96			5	96				
04:15		8	79			5	86				
04:30		4	95			14	102				
04:45		4	87	20	357	2	104	26	388	46	745
05:00		10	83			9	**114**				
05:15		17	101			11	**137**				
05:30		21	104			8	**114**				
05:45		18	77	66	365	16	**132**	44	497	110	862
06:00		18	65			34	98				
06:15		29	69			29	96				
06:30		41	59			68	73				
06:45		101	68	189	261	90	65	221	332	410	593
07:00		**96**	67			**126**	72				
07:15		**161**	45			**211**	69				
07:30		**184**	43			**221**	48				
07:45		**155**	58	596	213	**111**	50	669	239	1265	452
08:00		89	57			84	50				
08:15		96	44			75	57				
08:30		73	50			73	47				
08:45		72	42	330	193	44	36	276	190	606	383
09:00		48	43			52	41				
09:15		52	45			50	21				
09:30		45	27			52	28				
09:45		60	32	205	147	52	18	206	108	411	255
10:00		36	16			50	25				
10:15		43	12			45	24				
10:30		46	18			56	24				
10:45		43	14	168	60	46	18	197	91	365	151
11:00		51	9			39	18				
11:15		47	13			39	16				
11:30		59	10			38	13				
11:45		51	9	208	41	59	9	175	56	383	97
Total		1810	2986	1810	2986	1840	3241	1840	3241	3650	6227
Combined Total		4796		4796		5081		5081		9877	
AM Peak		07:00				07:00					
Vol.		596				669					
P.H.F.		0.810				0.757					
PM Peak			02:30				05:00				
Vol.			515				497				
P.H.F.			0.776				0.875				
Percentage		37.7%	62.3%			36.2%	63.8%				
ADT/AADT		ADT 9,877		AADT 9,877							

Counts Unlimited, Inc
PO Box 1178
Corona, CA 92878
(951) 268-6268

City of Riverside
Trautwein Road
N/ Van Buren Boulevard
24 Hour Directional Volume Count

RIV020
Site Code: 042-11028
Date Start: 09-Feb-11
Date End: 09-Feb-11

Start Time	09-Feb-11 Wed	Northbound Morning	Northbound Afternoon	Hour Totals Morning	Hour Totals Afternoon	Southbound Morning	Southbound Afternoon	Hour Totals Morning	Hour Totals Afternoon	Combined Totals Morning	Combined Totals Afternoon
12:00		12	135			15	127				
12:15		5	132			12	114				
12:30		8	124			10	141				
12:45		3	136	28	527	4	114	41	496	69	1023
01:00		8	124			10	106				
01:15		4	133			4	107				
01:30		2	159			8	104				
01:45		5	129	19	545	6	117	28	434	47	979
02:00		6	142			6	143				
02:15		3	180			4	176				
02:30		3	**194**			4	166				
02:45		0	**243**	12	759	3	150	17	635	29	1394
03:00		4	**217**			10	147				
03:15		6	**184**			3	147				
03:30		7	151			4	153				
03:45		14	182	31	734	11	158	28	605	59	1339
04:00		7	164			10	140				
04:15		14	143			7	166				
04:30		23	189			10	168				
04:45		28	173	72	669	13	147	40	621	112	1290
05:00		18	161			19	**169**				
05:15		28	198			16	**177**				
05:30		36	164			22	**195**				
05:45		47	180	129	703	31	**184**	88	725	217	1428
06:00		59	184			31	158				
06:15		91	176			43	158				
06:30		133	143			69	142				
06:45		157	163	440	666	86	131	229	589	669	1255
07:00		197	131			**114**	137				
07:15		**236**	108			**150**	117				
07:30		**293**	117			**182**	93				
07:45		**247**	99	973	455	**116**	92	562	439	1535	894
08:00		**208**	99			94	106				
08:15		176	67			63	158				
08:30		132	65			83	101				
08:45		156	67	672	298	81	88	321	453	993	751
09:00		138	73			97	74				
09:15		106	67			71	76				
09:30		141	52			71	71				
09:45		110	51	495	243	79	47	318	268	813	511
10:00		102	41			94	37				
10:15		105	38			79	39				
10:30		122	32			89	28				
10:45		139	18	468	129	97	27	359	131	827	260
11:00		138	16			90	22				
11:15		128	17			109	23				
11:30		133	18			109	17				
11:45		150	11	549	62	107	18	415	80	964	142
Total		3888	5790	3888	5790	2446	5476	2446	5476	6334	11266
Combined Total		9678		9678		7922		7922		17600	
AM Peak		07:15				07:00					
Vol.		984				562					
P.H.F.		0.840				0.772					
PM Peak			02:30				05:00				
Vol.			838				725				
P.H.F.			0.862				0.929				
Percentage		40.2%	59.8%			30.9%	69.1%				
ADT/AADT		ADT 17,600		AADT 17,600							

Counts Unlimited, Inc
PO Box 1178
Corona, CA 92878
(951) 268-6268

City of Riverside
Orange Terrace Parkway
N/ Van Buren Boulevard
24 Hour Directional Volume Count

RIV021
Site Code: 042-11028
Date Start: 09-Feb-11
Date End: 09-Feb-11

Start Time	09-Feb-11 Wed	Northbound Morning	Northbound Afternoon	Hour Totals Morning	Hour Totals Afternoon	Southbound Morning	Southbound Afternoon	Hour Totals Morning	Hour Totals Afternoon	Combined Totals Morning	Combined Totals Afternoon
12:00		16	54			6	59				
12:15		6	48			2	78				
12:30		11	48			2	52				
12:45		10	55	43	205	3	52	13	241	56	446
01:00		3	56			2	52				
01:15		7	45			3	43				
01:30		2	49			8	49				
01:45		4	84	16	234	3	53	16	197	32	431
02:00		3	60			0	**59**				
02:15		2	62			3	**77**				
02:30		4	82			3	**75**				
02:45		6	105	15	309	2	**67**	8	278	23	587
03:00		3	92			6	52				
03:15		2	71			3	51				
03:30		1	75			8	59				
03:45		2	71	8	309	15	44	32	206	40	515
04:00		5	92			10	53				
04:15		3	79			21	54				
04:30		11	101			25	61				
04:45		7	87	26	359	26	51	82	219	108	578
05:00		0	114			28	51				
05:15		4	**121**			40	53				
05:30		14	**100**			38	55				
05:45		20	**123**	38	458	58	63	164	222	202	680
06:00		16	**123**			42	76				
06:15		23	98			87	53				
06:30		22	88			78	51				
06:45		37	82	98	391	**105**	46	312	226	410	617
07:00		25	82			**119**	49				
07:15		**66**	80			**179**	40				
07:30		**55**	72			**145**	29				
07:45		**67**	65	213	299	92	34	535	152	748	451
08:00		**64**	59			90	35				
08:15		43	75			67	41				
08:30		34	62			72	31				
08:45		36	54	177	250	67	31	296	138	473	388
09:00		49	55			70	19				
09:15		37	57			61	27				
09:30		31	49			50	22				
09:45		40	37	157	198	50	13	231	81	388	279
10:00		28	30			45	12				
10:15		27	29			48	7				
10:30		30	21			49	10				
10:45		40	17	125	97	47	7	189	36	314	133
11:00		34	26			46	9				
11:15		64	17			41	5				
11:30		41	11			50	9				
11:45		47	12	186	66	53	6	190	29	376	95
Total		1102	3175	1102	3175	2068	2025	2068	2025	3170	5200
Combined Total		4277		4277		4093		4093		8370	
AM Peak		07:15				06:45					
Vol.		252				548					
P.H.F.		0.940				0.765					
PM Peak			05:15				02:00				
Vol.			467				278				
P.H.F.			0.949				0.903				
Percentage		25.8%	74.2%			50.5%	49.5%				
ADT/AADT		ADT 8,370		AADT 8,370							

Counts Unlimited, Inc
PO Box 1178
Corona, CA 92878
(951) 268-6268

City of Riverside
Orange Terrace Parkway
E/ Trautwein Road
24 Hour Directional Volume Count

RIV022
Site Code: 042-11028
Date Start: 09-Feb-11
Date End: 09-Feb-11

Start Time	09-Feb-11 Wed	Eastbound Morning	Eastbound Afternoon	Hour Totals Morning	Hour Totals Afternoon	Westbound Morning	Westbound Afternoon	Hour Totals Morning	Hour Totals Afternoon	Combined Totals Morning	Combined Totals Afternoon
12:00		9	60			1	55				
12:15		5	63			4	63				
12:30		5	56			3	69				
12:45		7	74	26	253	2	60	10	247	36	500
01:00		5	57			1	47				
01:15		6	65			2	53				
01:30		1	109			3	54				
01:45		4	179	16	410	0	59	6	213	22	623
02:00		6	132			3	**138**				
02:15		3	108			2	**133**				
02:30		1	86			4	**108**				
02:45		1	130	11	456	5	**110**	14	489	25	945
03:00		2	117			3	83				
03:15		0	108			4	77				
03:30		5	114			6	93				
03:45		5	118	12	457	9	92	22	345	34	802
04:00		7	116			14	72				
04:15		3	130			10	67				
04:30		3	126			10	84				
04:45		2	150	15	522	20	74	54	297	69	819
05:00		6	158			23	88				
05:15		2	165			22	75				
05:30		3	**139**			33	91				
05:45		12	**173**	23	635	38	95	116	349	139	984
06:00		16	**158**			42	118				
06:15		19	**173**			74	97				
06:30		23	132			107	75				
06:45		65	133	123	596	103	72	326	362	449	958
07:00		**154**	128			**203**	74				
07:15		**176**	103			**272**	72				
07:30		**152**	97			**234**	57				
07:45		**78**	94	560	422	**124**	32	833	235	1393	657
08:00		47	83			118	75				
08:15		43	91			88	85				
08:30		39	65			86	57				
08:45		39	75	168	314	89	43	381	260	549	574
09:00		40	60			74	37				
09:15		35	55			74	48				
09:30		38	65			63	31				
09:45		43	32	156	212	63	21	274	137	430	349
10:00		36	37			63	19				
10:15		50	28			49	17				
10:30		47	29			53	13				
10:45		64	27	197	121	51	9	216	58	413	179
11:00		60	18			49	5				
11:15		56	15			79	12				
11:30		61	14			50	6				
11:45		54	14	231	61	63	7	241	30	472	91
Total		1538	4459	1538	4459	2493	3022	2493	3022	4031	7481
Combined Total		5997		5997		5515		5515		11512	
AM Peak		07:00				07:00					
Vol.		560				833					
P.H.F.		0.795				0.766					
PM Peak			05:30				02:00				
Vol.			643				489				
P.H.F.			0.929				0.886				
Percentage		25.6%	74.4%			45.2%	54.8%				
ADT/AADT		ADT 11,512		AADT 11,512							

Counts Unlimited, Inc
PO Box 1178
Corona, CA 92878
(951) 268-6268

City of Riverside
Mission Grove Parkway
S/ Alessandro Boulevard
24 Hour Directional Volume Count

RIV023
Site Code: 042-11028
Date Start: 09-Feb-11
Date End: 09-Feb-11

Start Time	09-Feb-11 Wed	Northbound Morning	Northbound Afternoon	Hour Totals Morning	Hour Totals Afternoon	Southbound Morning	Southbound Afternoon	Hour Totals Morning	Hour Totals Afternoon	Combined Totals Morning	Combined Totals Afternoon
12:00		3	91			8	78				
12:15		7	91			2	83				
12:30		3	68			7	72				
12:45		3	71	16	321	8	66	25	299	41	620
01:00		2	64			2	71				
01:15		2	79			3	80				
01:30		3	72			10	77				
01:45		3	80	10	295	8	88	23	316	33	611
02:00		9	92			3	70				
02:15		5	**85**			3	79				
02:30		6	**75**			3	81				
02:45		3	**97**	23	349	1	88	10	318	33	667
03:00		1	**115**			2	78				
03:15		1	77			1	87				
03:30		2	77			4	98				
03:45		3	89	7	358	3	93	10	356	17	714
04:00		2	70			12	91				
04:15		6	74			6	105				
04:30		9	108			7	105				
04:45		7	75	24	327	9	98	34	399	58	726
05:00		14	84			5	**112**				
05:15		15	80			9	**105**				
05:30		20	86			15	**117**				
05:45		25	79	74	329	22	**144**	51	478	125	807
06:00		30	91			16	108				
06:15		23	65			22	99				
06:30		39	84			26	80				
06:45		53	65	145	305	40	94	104	381	249	686
07:00		**69**	78			70	79				
07:15		**104**	61			73	54				
07:30		**130**	44			69	62				
07:45		**98**	36	401	219	63	58	275	253	676	472
08:00		62	45			46	59				
08:15		77	51			55	54				
08:30		79	43			53	37				
08:45		71	40	289	179	49	51	203	201	492	380
09:00		62	33			53	49				
09:15		56	27			38	34				
09:30		66	20			53	36				
09:45		69	21	253	101	62	23	206	142	459	243
10:00		59	20			54	25				
10:15		64	24			62	25				
10:30		55	18			64	22				
10:45		76	7	254	69	66	12	246	84	500	153
11:00		64	10			**91**	11				
11:15		90	12			**66**	13				
11:30		86	19			**88**	9				
11:45		50	9	290	50	**75**	9	320	42	610	92
Total		1786	2902	1786	2902	1507	3269	1507	3269	3293	6171
Combined Total		4688		4688		4776		4776		9464	
AM Peak		07:00				11:00					
Vol.		401				320					
P.H.F.		0.771				0.879					
PM Peak			02:15				05:00				
Vol.			372				478				
P.H.F.			0.809				0.830				
Percentage		38.1%	61.9%			31.6%	68.4%				
ADT/AADT		ADT 9,464		AADT 9,464							

Counts Unlimited, Inc
PO Box 1178
Corona, CA 92878
(951) 268-6268

City of Riverside
Alessandro Boulevard
S/ Canyon Crest Drive
24 Hour Directional Volume Count

RIV024
Site Code: 042-11028
Date Start: 09-Feb-11
Date End: 09-Feb-11

Start Time	09-Feb-11 Wed	Northbound Morning	Northbound Afternoon	Hour Totals Morning	Hour Totals Afternoon	Southbound Morning	Southbound Afternoon	Hour Totals Morning	Hour Totals Afternoon	Combined Totals Morning	Combined Totals Afternoon
12:00		29	278			33	306				
12:15		24	283			52	366				
12:30		22	315			39	306				
12:45		9	297	84	1173	32	301	156	1279	240	2452
01:00		19	337			27	269				
01:15		21	327			39	325				
01:30		11	311			23	315				
01:45		17	344	68	1319	15	361	104	1270	172	2589
02:00		12	351			20	394				
02:15		19	385			16	393				
02:30		13	396			16	447				
02:45		18	432	62	1564	12	423	64	1657	126	3221
03:00		20	404			27	449				
03:15		27	425			15	505				
03:30		45	409			18	565				
03:45		57	365	149	1603	25	559	85	2078	234	3681
04:00		74	331			15	593				
04:15		101	371			32	606				
04:30		132	408			38	613				
04:45		138	**451**	445	1561	36	712	121	2524	566	4085
05:00		159	**407**			63	706				
05:15		203	**406**			83	**655**				
05:30		240	**424**			107	**850**				
05:45		215	393	817	1630	129	**734**	382	2945	1199	4575
06:00		302	341			101	**741**				
06:15		406	345			127	647				
06:30		582	306			182	546				
06:45		689	259	1979	1251	246	449	656	2383	2635	3634
07:00		**752**	239			278	410				
07:15		**901**	219			**310**	346				
07:30		**896**	171			**306**	302				
07:45		**771**	163	3320	792	**292**	304	1186	1362	4506	2154
08:00		668	139			**303**	323				
08:15		625	212			308	314				
08:30		580	193			278	321				
08:45		489	138	2362	682	280	388	1169	1346	3531	2028
09:00		396	128			254	323				
09:15		391	117			235	318				
09:30		441	125			244	189				
09:45		428	109	1656	479	245	194	978	1024	2634	1503
10:00		388	81			262	153				
10:15		364	84			225	118				
10:30		324	59			222	99				
10:45		298	57	1374	281	272	89	981	459	2355	740
11:00		287	44			248	70				
11:15		357	41			316	72				
11:30		297	52			278	53				
11:45		266	34	1207	171	331	63	1173	258	2380	429
Total		13523	12506	13523	12506	7055	18585	7055	18585	20578	31091
Combined Total		26029		26029		25640		25640		51669	
AM Peak		07:00				07:15					
Vol.		3320				1211					
P.H.F.		0.921				0.977					
PM Peak			04:45				05:15				
Vol.			1688				2980				
P.H.F.			0.936				0.876				
Percentage		52.0%	48.0%			27.5%	72.5%				
ADT/AADT		ADT 51,669		AADT 51,669							

Counts Unlimited, Inc
PO Box 1178
Corona, CA 92878
(951) 268-6268

City of Riverside
Overlook Parkway
W/ Kingdom Drive
24 Hour Directional Volume Count

RIV025WD
Site Code: 042-11028
Date Start: 08-Feb-11
Date End: 08-Feb-11

Start Time	08-Feb-11 Tue	Eastbound Morning	Eastbound Afternoon	Hour Totals Morning	Hour Totals Afternoon	Westbound Morning	Westbound Afternoon	Hour Totals Morning	Hour Totals Afternoon	Combined Totals Morning	Combined Totals Afternoon
12:00		0	8			1	8				
12:15		1	11			0	15				
12:30		0	14			1	14				
12:45		0	12	1	45	0	3	2	40	3	85
01:00		1	8			0	13				
01:15		2	12			0	14				
01:30		0	10			0	7				
01:45		0	19	3	49	1	17	1	51	4	100
02:00		0	15			0	20				
02:15		0	21			0	19				
02:30		1	13			0	9				
02:45		0	18	1	67	0	10	0	58	1	125
03:00		0	26			1	25				
03:15		0	24			0	9				
03:30		0	23			0	12				
03:45		0	11	0	84	0	13	1	59	1	143
04:00		0	22			2	17				
04:15		1	21			1	12				
04:30		1	10			5	15				
04:45		0	16	2	69	1	27	9	71	11	140
05:00		0	15			1	17				
05:15		0	**24**			7	5				
05:30		2	**19**			3	**24**				
05:45		2	**33**	4	91	8	**23**	19	69	23	160
06:00		4	**27**			5	**12**				
06:15		2	17			7	**21**				
06:30		6	13			9	11				
06:45		8	15	20	72	12	10	33	54	53	126
07:00		17	10			16	5				
07:15		14	8			**28**	7				
07:30		**20**	18			**42**	11				
07:45		**21**	16	72	52	**27**	9	113	32	185	84
08:00		**19**	16			**22**	10				
08:15		**21**	9			21	3				
08:30		14	5			24	8				
08:45		11	7	65	37	31	7	98	28	163	65
09:00		11	11			12	3				
09:15		11	6			7	5				
09:30		7	4			11	3				
09:45		9	7	38	28	12	8	42	19	80	47
10:00		6	1			9	5				
10:15		6	9			8	2				
10:30		12	4			8	5				
10:45		5	5	29	19	14	4	39	16	68	35
11:00		8	4			4	0				
11:15		7	4			6	0				
11:30		15	1			9	1				
11:45		15	0	45	9	15	2	34	3	79	12
Total		280	622	280	622	391	500	391	500	671	1122
Combined Total		902		902		891		891		1793	
AM Peak		07:30				07:15					
Vol.		81				119					
P.H.F.		0.964				0.708					
PM Peak			05:15				05:30				
Vol.			103				80				
P.H.F.			0.780				0.833				
Percentage		31.0%	69.0%			43.9%	56.1%				
ADT/AADT		ADT 1,793		AADT 1,793							

Counts Unlimited, Inc
PO Box 1178
Corona, CA 92878
(951) 268-6268

City of Riverside
Kingdom Drive
S/ Overlook Parkway
24 Hour Directional Volume Count

RIV026WD
Site Code: 042-11028
Date Start: 08-Feb-11
Date End: 08-Feb-11

Start Time	08-Feb-11 Tue	Northbound Morning	Northbound Afternoon	Hour Totals Morning	Hour Totals Afternoon	Southbound Morning	Southbound Afternoon	Hour Totals Morning	Hour Totals Afternoon	Combined Totals Morning	Combined Totals Afternoon
12:00		0	4			0	5				
12:15		0	10			0	5				
12:30		0	4			0	4				
12:45		0	2	0	20	0	10	0	24	0	44
01:00		0	7			0	6				
01:15		0	8			1	5				
01:30		0	4			0	3				
01:45		0	9	0	28	0	9	1	23	1	51
02:00		0	9			0	11				
02:15		0	3			1	8				
02:30		0	2			0	6				
02:45		0	12	0	26	0	**5**	1	30	1	56
03:00		0	9			0	**11**				
03:15		0	1			0	**8**				
03:30		0	6			0	**13**				
03:45		0	**9**	0	25	0	4	0	36	0	61
04:00		0	**10**			0	7				
04:15		1	**6**			1	3				
04:30		1	**7**			0	6				
04:45		3	9	5	32	0	6	1	22	6	54
05:00		0	5			1	9				
05:15		4	5			0	10				
05:30		2	9			0	10				
05:45		2	2	8	21	0	7	1	36	9	57
06:00		1	5			0	7				
06:15		5	4			0	6				
06:30		8	8			0	3				
06:45		8	1	22	18	1	9	1	25	23	43
07:00		15	3			1	5				
07:15		10	4			**9**	8				
07:30		14	3			**4**	9				
07:45		12	3	51	13	**7**	2	21	24	72	37
08:00		**9**	3			**8**	8				
08:15		**12**	3			4	4				
08:30		**8**	1			6	3				
08:45		**26**	3	55	10	2	4	20	19	75	29
09:00		4	4			5	3				
09:15		7	2			3	4				
09:30		8	0			3	5				
09:45		4	1	23	7	1	2	12	14	35	21
10:00		6	0			1	2				
10:15		6	1			1	4				
10:30		4	2			2	4				
10:45		8	1	24	4	3	0	7	10	31	14
11:00		2	0			6	2				
11:15		6	0			2	0				
11:30		4	1			7	0				
11:45		8	0	20	1	5	0	20	2	40	3
Total		208	205	208	205	85	265	85	265	293	470
Combined Total		413		413		350		350		763	
AM Peak		08:00				07:15					
Vol.		55				28					
P.H.F.		0.529				0.778					
PM Peak			03:45				02:45				
Vol.			32				37				
P.H.F.			0.800				0.712				
Percentage		50.4%	49.6%			24.3%	75.7%				
ADT/AADT		ADT 763		AADT 763							

Counts Unlimited, Inc
PO Box 1178
Corona, CA 92878
(951) 268-6268

City of Riverside
Crystal View Terrace
S/ Overlook Parlway
24 Hour Directional Volume Count

RIV027WD
Site Code: 042-11028
Date Start: 08-Feb-11
Date End: 08-Feb-11

Start Time	08-Feb-11 Tue	Northbound Morning	Northbound Afternoon	Hour Totals Morning	Hour Totals Afternoon	Southbound Morning	Southbound Afternoon	Hour Totals Morning	Hour Totals Afternoon	Combined Totals Morning	Combined Totals Afternoon
12:00		1	10			0	9				
12:15		0	13			0	12				
12:30		1	11			0	9				
12:45		0	5	2	39	0	10	0	40	2	79
01:00		0	12			1	6				
01:15		0	8			1	9				
01:30		0	6			0	8				
01:45		1	13	1	39	0	18	2	41	3	80
02:00		0	22			0	10				
02:15		1	14			0	17				
02:30		1	9			0	9				
02:45		0	17	2	62	0	16	0	52	2	114
03:00		1	19			0	19				
03:15		0	8			0	16				
03:30		0	12			0	17				
03:45		2	14	3	53	0	16	0	68	3	121
04:00		1	12			0	16				
04:15		1	7			0	23				
04:30		3	17			1	10				
04:45		0	**21**	5	57	2	**22**	3	71	8	128
05:00		3	**15**			0	**18**				
05:15		3	**9**			0	**24**				
05:30		2	**22**			3	**13**				
05:45		5	16	13	62	2	22	5	77	18	139
06:00		5	11			4	17				
06:15		2	18			4	12				
06:30		5	11			10	16				
06:45		7	11	19	51	10	11	28	56	47	107
07:00		11	5			23	7				
07:15		**23**	7			14	8				
07:30		**33**	8			**15**	7				
07:45		**20**	9	87	29	**21**	13	73	35	160	64
08:00		**19**	8			**23**	13				
08:15		13	7			**18**	5				
08:30		11	7			11	2				
08:45		7	8	50	30	11	7	63	27	113	57
09:00		9	6			12	11				
09:15		8	4			10	4				
09:30		2	5			5	3				
09:45		13	6	32	21	10	4	37	22	69	43
10:00		4	6			8	2				
10:15		9	2			11	4				
10:30		4	6			10	3				
10:45		8	1	25	15	5	5	34	14	59	29
11:00		4	1			8	2				
11:15		6	0			7	4				
11:30		8	1			10	2				
11:45		5	2	23	4	14	1	39	9	62	13
Total		262	462	262	462	284	512	284	512	546	974
Combined Total		724		724		796		796		1520	
AM Peak		07:15				07:30					
Vol.		95				77					
P.H.F.		0.720				0.837					
PM Peak			04:45				04:45				
Vol.			67				77				
P.H.F.			0.761				0.802				
Percentage		36.2%	63.8%			35.7%	64.3%				
ADT/AADT		ADT 1,520		AADT 1,520							

Counts Unlimited, Inc
PO Box 1178
Corona, CA 92878
(951) 268-6268

City of Riverside
Cactus Avenue
E/ Crystal View Terrace
24 Hour Directional Volume Count

RIV028WD
Site Code: 042-11028
Date Start: 08-Feb-11
Date End: 08-Feb-11

Start Time	08-Feb-11 Tue	Eastbound Morning	Eastbound Afternoon	Hour Totals Morning	Hour Totals Afternoon	Westbound Morning	Westbound Afternoon	Hour Totals Morning	Hour Totals Afternoon	Combined Totals Morning	Combined Totals Afternoon
12:00		0	6			1	13				
12:15		0	6			0	13				
12:30		0	3			0	3				
12:45		0	4	0	19	0	5	1	34	1	53
01:00		1	3			0	9				
01:15		0	5			0	9				
01:30		0	4			1	12				
01:45		1	2	2	14	0	14	1	44	3	58
02:00		0	5			0	12				
02:15		0	13			0	**16**				
02:30		0	9			0	**12**				
02:45		0	14	0	41	0	**24**	0	64	0	105
03:00		0	4			0	**29**				
03:15		0	11			0	8				
03:30		0	7			0	13				
03:45		0	7	0	29	1	10	1	60	1	89
04:00		2	8			2	14				
04:15		0	**20**			0	7				
04:30		1	**11**			0	22				
04:45		0	**8**	3	47	0	19	2	62	5	109
05:00		0	**17**			0	13				
05:15		0	15			2	8				
05:30		0	6			3	25				
05:45		1	14	1	52	1	12	6	58	7	110
06:00		1	9			3	14				
06:15		1	9			3	13				
06:30		5	6			6	7				
06:45		5	4	12	28	13	16	25	50	37	78
07:00		15	4			19	8				
07:15		12	2			**38**	7				
07:30		**11**	9			**44**	8				
07:45		**14**	8	52	23	**41**	9	142	32	194	55
08:00		**15**	4			**29**	3				
08:15		**13**	6			27	4				
08:30		5	1			25	2				
08:45		5	2	38	13	6	8	87	17	125	30
09:00		4	4			8	1				
09:15		3	1			7	2				
09:30		6	9			9	7				
09:45		2	3	15	17	10	6	34	16	49	33
10:00		4	1			2	0				
10:15		3	0			3	0				
10:30		3	0			3	3				
10:45		1	3	11	4	4	2	12	5	23	9
11:00		2	0			3	1				
11:15		0	0			6	0				
11:30		6	1			6	1				
11:45		7	0	15	1	7	0	22	2	37	3
Total		149	288	149	288	333	444	333	444	482	732
Combined Total		437		437		777		777		1214	
AM Peak		07:30				07:15					
Vol.		53				152					
P.H.F.		0.883				0.864					
PM Peak			04:15				02:15				
Vol.			56				81				
P.H.F.			0.700				0.698				
Percentage		34.1%	65.9%			42.9%	57.1%				
ADT/AADT		ADT 1,214		AADT 1,214							

Counts Unlimited, Inc
PO Box 1178
Corona, CA 92878
(951) 268-6268

City of Riverside
Mary Street
N/ Victoria Avenue
24 Hour Directional Volume Count

RIV001
Site Code: 042-12071
Date Start: 16-Feb-12
Date End: 16-Feb-12

Start Time	16-Feb-12 Thu	Northbound Morning	Northbound Afternoon	Hour Totals Morning	Hour Totals Afternoon	Southbound Morning	Southbound Afternoon	Hour Totals Morning	Hour Totals Afternoon	Combined Totals Morning	Combined Totals Afternoon
12:00		0	57			6	67				
12:15		4	55			1	72				
12:30		2	74			4	64				
12:45		0	44	6	230	1	67	12	270	18	500
01:00		0	60			0	60				
01:15		2	50			1	61				
01:30		0	61			1	52				
01:45		0	57	2	228	0	57	2	230	4	458
02:00		0	59			2	75				
02:15		0	**79**			0	99				
02:30		0	**99**			1	85				
02:45		0	**110**	0	347	2	91	5	350	5	697
03:00		1	**86**			0	90				
03:15		0	76			2	112				
03:30		0	61			0	103				
03:45		4	67	5	290	0	92	2	397	7	687
04:00		3	62			3	118				
04:15		5	57			2	107				
04:30		6	67			0	123				
04:45		7	62	21	248	2	**121**	7	469	28	717
05:00		13	77			2	**135**				
05:15		17	72			3	**148**				
05:30		9	78			1	**125**				
05:45		22	58	61	285	7	107	13	515	74	800
06:00		35	45			10	100				
06:15		42	49			14	87				
06:30		61	55			11	80				
06:45		63	40	201	189	26	80	61	347	262	536
07:00		106	32			27	72				
07:15		**158**	39			42	65				
07:30		**158**	28			47	80				
07:45		**166**	37	588	136	63	62	179	279	767	415
08:00		**158**	29			70	53				
08:15		135	21			35	42				
08:30		117	16			25	45				
08:45		99	21	509	87	33	43	163	183	672	270
09:00		85	9			37	32				
09:15		60	15			35	46				
09:30		64	7			40	30				
09:45		77	8	286	39	44	32	156	140	442	179
10:00		79	10			47	15				
10:15		72	14			47	24				
10:30		58	5			46	12				
10:45		59	6	268	35	52	13	192	64	460	99
11:00		62	1			**54**	12				
11:15		58	6			**69**	13				
11:30		67	1			**73**	7				
11:45		77	4	264	12	**65**	8	261	40	525	52
Total		2211	2126	2211	2126	1053	3284	1053	3284	3264	5410
Combined Total		4337		4337		4337		4337		8674	
AM Peak		07:15				11:00					
Vol.		640				261					
P.H.F.		0.964				0.894					
PM Peak			02:15				04:45				
Vol.			374				529				
P.H.F.			0.850				0.894				
Percentage		51.0%	49.0%			24.3%	75.7%				
ADT/AADT		ADT 8,674		AADT 8,674							

Counts Unlimited, Inc
PO Box 1178
Corona, CA 92878
(951) 268-6268

City of Riverside
Mary Street
N/ Lincoln Avenue
24 Hour Directional Volume Count

RIV002
Site Code: 042-12071
Date Start: 16-Feb-12
Date End: 16-Feb-12

Start Time	16-Feb-12 Thu	Northbound Morning	Northbound Afternoon	Hour Totals Morning	Hour Totals Afternoon	Southbound Morning	Southbound Afternoon	Hour Totals Morning	Hour Totals Afternoon	Combined Totals Morning	Combined Totals Afternoon
12:00		1	70			7	87				
12:15		3	78			5	100				
12:30		7	84			6	84				
12:45		4	68	15	300	3	74	21	345	36	645
01:00		2	78			1	68				
01:15		2	69			1	85				
01:30		4	82			2	83				
01:45		1	68	9	297	3	82	7	318	16	615
02:00		4	78			4	87				
02:15		2	89			3	113				
02:30		2	**105**			4	92				
02:45		1	**111**	9	383	2	117	13	409	22	792
03:00		1	**110**			1	118				
03:15		0	**96**			1	156				
03:30		2	65			1	118				
03:45		3	96	6	367	0	96	3	488	9	855
04:00		5	71			1	152				
04:15		7	76			4	138				
04:30		6	84			3	140				
04:45		13	72	31	303	4	**142**	12	572	43	875
05:00		13	94			5	**172**				
05:15		20	86			8	**183**				
05:30		12	83			7	**154**				
05:45		22	66	67	329	12	122	32	631	99	960
06:00		32	64			18	128				
06:15		54	61			24	93				
06:30		69	63			12	91				
06:45		77	50	232	238	39	90	93	402	325	640
07:00		116	50			38	82				
07:15		**181**	40			55	78				
07:30		**185**	34			57	92				
07:45		**174**	41	656	165	86	73	236	325	892	490
08:00		**165**	38			63	61				
08:15		168	29			49	60				
08:30		124	18			55	45				
08:45		107	25	564	110	44	41	211	207	775	317
09:00		112	16			45	43				
09:15		75	30			61	49				
09:30		73	12			54	40				
09:45		95	13	355	71	51	38	211	170	566	241
10:00		83	18			51	31				
10:15		81	20			67	26				
10:30		85	8			77	15				
10:45		74	6	323	52	57	13	252	85	575	137
11:00		73	4			**75**	17				
11:15		90	8			**92**	18				
11:30		82	3			**80**	5				
11:45		89	7	334	22	**95**	7	342	47	676	69
Total		2601	2637	2601	2637	1433	3999	1433	3999	4034	6636
Combined Total		5238		5238		5432		5432		10670	
AM Peak		07:15				11:00					
Vol.		705				342					
P.H.F.		0.953				0.900					
PM Peak			02:30				04:45				
Vol.			422				651				
P.H.F.			0.950				0.889				
Percentage		49.7%	50.3%			26.4%	73.6%				
ADT/AADT		ADT 10,670		AADT 10,670							

Counts Unlimited, Inc
PO Box 1178
Corona, CA 92878
(951) 268-6268

City of Riverside
Madison Street
S/ Victoria Avenue
24 Hour Directional Volume Count

RIV003
Site Code: 042-12071
Date Start: 16-Feb-12
Date End: 16-Feb-12

Start Time	16-Feb-12 Thu	Northbound Morning	Northbound Afternoon	Hour Totals Morning	Hour Totals Afternoon	Southbound Morning	Southbound Afternoon	Hour Totals Morning	Hour Totals Afternoon	Combined Totals Morning	Combined Totals Afternoon
12:00		0	10			1	12				
12:15		0	11			0	12				
12:30		0	5			0	7				
12:45		0	5	0	31	0	13	1	44	1	75
01:00		0	5			0	19				
01:15		0	4			0	19				
01:30		0	10			1	10				
01:45		0	13	0	32	1	12	2	60	2	92
02:00		0	4			0	9				
02:15		1	3			0	15				
02:30		0	9			0	11				
02:45		0	14	1	30	0	15	0	50	1	80
03:00		1	3			0	8				
03:15		1	5			0	14				
03:30		1	3			0	21				
03:45		1	**12**	4	23	1	14	1	57	5	80
04:00		0	**13**			0	12				
04:15		2	**10**			1	22				
04:30		0	**5**			1	18				
04:45		0	6	2	34	1	14	3	66	5	100
05:00		6	11			2	17				
05:15		0	11			2	**14**				
05:30		3	12			3	**25**				
05:45		2	4	11	38	3	**19**	10	75	21	113
06:00		5	5			2	**20**				
06:15		5	5			6	9				
06:30		11	7			6	22				
06:45		5	6	26	23	8	11	22	62	48	85
07:00		12	2			11	15				
07:15		**11**	5			7	15				
07:30		**13**	3			6	6				
07:45		**17**	4	53	14	5	15	29	51	82	65
08:00		**18**	4			7	11				
08:15		8	2			7	7				
08:30		7	3			9	9				
08:45		5	1	38	10	7	4	30	31	68	41
09:00		6	0			10	11				
09:15		6	1			6	2				
09:30		6	1			12	4				
09:45		6	2	24	4	11	9	39	26	63	30
10:00		12	2			10	4				
10:15		8	0			9	6				
10:30		6	2			12	5				
10:45		6	2	32	6	8	2	39	17	71	23
11:00		7	1			**12**	7				
11:15		6	1			**13**	3				
11:30		9	1			**10**	4				
11:45		13	0	35	3	**11**	4	46	18	81	21
Total		226	248	226	248	222	557	222	557	448	805
Combined Total		474		474		779		779		1253	
AM Peak		07:15				11:00					
Vol.		59				46					
P.H.F.		0.819				0.885					
PM Peak			03:45				05:15				
Vol.			40				78				
P.H.F.			0.714				0.780				
Percentage		47.7%	52.3%			28.5%	71.5%				
ADT/AADT		ADT 1,253		AADT 1,253							

Counts Unlimited, Inc
PO Box 1178
Corona, CA 92878
(951) 268-6268

City of Riverside
Madison Street
N/ Victoria Avenue
24 Hour Directional Volume Count

RIV004
Site Code: 042-12071
Date Start: 16-Feb-12
Date End: 16-Feb-12

Start Time	16-Feb-12 Thu	Northbound Morning	Northbound Afternoon	Hour Totals Morning	Hour Totals Afternoon	Southbound Morning	Southbound Afternoon	Hour Totals Morning	Hour Totals Afternoon	Combined Totals Morning	Combined Totals Afternoon
12:00		1	32			4	43				
12:15		1	29			0	37				
12:30		0	27			1	23				
12:45		0	26	2	114	1	34	6	137	8	251
01:00		0	22			1	53				
01:15		0	24			3	39				
01:30		0	34			0	31				
01:45		1	37	1	117	1	38	5	161	6	278
02:00		0	17			2	40				
02:15		3	23			1	49				
02:30		0	33			0	43				
02:45		0	35	3	108	0	47	3	179	6	287
03:00		1	27			0	31				
03:15		1	24			1	45				
03:30		3	**31**			1	54				
03:45		1	**32**	6	114	1	51	3	181	9	295
04:00		4	**46**			2	41				
04:15		3	**30**			4	**65**				
04:30		3	20			1	**60**				
04:45		2	27	12	123	2	**48**	9	214	21	337
05:00		8	35			3	**54**				
05:15		3	36			3	52				
05:30		8	32			8	58				
05:45		9	26	28	129	7	48	21	212	49	341
06:00		8	18			7	52				
06:15		14	27			12	36				
06:30		25	12			16	43				
06:45		21	20	68	77	29	37	64	168	132	245
07:00		33	16			27	52				
07:15		**45**	16			30	38				
07:30		**43**	12			25	18				
07:45		**45**	11	166	55	25	24	107	132	273	187
08:00		**65**	12			41	25				
08:15		31	12			24	24				
08:30		35	9			31	27				
08:45		41	3	172	36	19	13	115	89	287	125
09:00		29	7			38	18				
09:15		26	8			17	17				
09:30		38	6			23	13				
09:45		29	8	122	29	32	18	110	66	232	95
10:00		24	4			17	14				
10:15		26	6			22	10				
10:30		24	5			29	13				
10:45		28	6	102	21	29	4	97	41	199	62
11:00		24	5			**30**	13				
11:15		20	2			**31**	12				
11:30		33	1			**32**	10				
11:45		28	1	105	9	**39**	8	132	43	237	52
Total		787	932	787	932	672	1623	672	1623	1459	2555
Combined Total		1719		1719		2295		2295		4014	
AM Peak		07:15				11:00					
Vol.		198				132					
P.H.F.		0.762				0.805					
PM Peak			03:30				04:15				
Vol.			139				227				
P.H.F.			0.755				0.873				
Percentage		45.8%	54.2%			29.3%	70.7%				
ADT/AADT		ADT 4,014		AADT 4,014							

Counts Unlimited, Inc
PO Box 1178
Corona, CA 92878
(951) 268-6268

City of Riverside
Madison Street
N/ Lincoln Avenue
24 Hour Directional Volume Count

RIV005
Site Code: 042-12071
Date Start: 16-Feb-12
Date End: 16-Feb-12

Start Time	16-Feb-12 Thu	Northbound Morning	Northbound Afternoon	Hour Totals Morning	Hour Totals Afternoon	Southbound Morning	Southbound Afternoon	Hour Totals Morning	Hour Totals Afternoon	Combined Totals Morning	Combined Totals Afternoon
12:00		9	81			8	86				
12:15		4	75			7	87				
12:30		3	67			7	84				
12:45		3	72	19	295	7	71	29	328	48	623
01:00		3	49			3	98				
01:15		3	63			5	78				
01:30		2	76			1	76				
01:45		1	88	9	276	3	84	12	336	21	612
02:00		3	66			3	90				
02:15		8	86			4	100				
02:30		2	81			6	102				
02:45		0	91	13	324	5	88	18	380	31	704
03:00		6	86			3	87				
03:15		5	92			3	96				
03:30		8	**72**			1	**106**				
03:45		4	**82**	23	332	2	**103**	9	392	32	724
04:00		14	**110**			3	**106**				
04:15		8	**100**			6	**130**				
04:30		15	71			2	101				
04:45		15	68	52	349	7	91	18	428	70	777
05:00		26	79			15	104				
05:15		27	99			15	101				
05:30		31	93			21	124				
05:45		35	76	119	347	52	109	103	438	222	785
06:00		27	76			32	110				
06:15		42	66			22	85				
06:30		57	72			43	92				
06:45		73	48	199	262	57	88	154	375	353	637
07:00		70	74			51	109				
07:15		**103**	53			71	72				
07:30		**115**	43			54	52				
07:45		**103**	38	391	208	64	51	240	284	631	492
08:00		**126**	35			76	61				
08:15		87	35			52	52				
08:30		68	27			72	57				
08:45		91	28	372	125	57	47	257	217	629	342
09:00		81	28			54	46				
09:15		60	28			47	42				
09:30		84	17			58	32				
09:45		65	15	290	88	73	43	232	163	522	251
10:00		60	16			37	37				
10:15		66	18			58	23				
10:30		70	17			75	32				
10:45		64	16	260	67	69	14	239	106	499	173
11:00		85	10			**78**	25				
11:15		70	9			**72**	28				
11:30		69	12			**71**	22				
11:45		87	5	311	36	**89**	15	310	90	621	126
Total		2058	2709	2058	2709	1621	3537	1621	3537	3679	6246
Combined Total		4767		4767		5158		5158		9925	
AM Peak		07:15				11:00					
Vol.		447				310					
P.H.F.		0.887				0.871					
PM Peak			03:30				03:30				
Vol.			364				445				
P.H.F.			0.827				0.856				
Percentage		43.2%	56.8%			31.4%	68.6%				
ADT/AADT		ADT 9,925		AADT 9,925							

Counts Unlimited, Inc
PO Box 1178
Corona, CA 92878
(951) 268-6268

City of Riverside
Victoria Avenue
E/ Mary Street
24 Hour Directional Volume Count

RIV006
Site Code: 042-12071
Date Start: 16-Feb-12
Date End: 16-Feb-12

Start Time	16-Feb-12 Thu	Eastbound Morning	Eastbound Afternoon	Hour Totals Morning	Hour Totals Afternoon	Westbound Morning	Westbound Afternoon	Hour Totals Morning	Hour Totals Afternoon	Combined Totals Morning	Combined Totals Afternoon
12:00		1	43			0	64				
12:15		1	58			4	58				
12:30		0	37			2	84				
12:45		2	46	4	184	1	60	7	266	11	450
01:00		0	46			0	43				
01:15		0	50			0	39				
01:30		0	47			1	64				
01:45		1	59	1	202	0	77	1	223	2	425
02:00		0	82			1	78				
02:15		0	101			1	92				
02:30		1	117			1	**138**				
02:45		1	81	2	381	1	**144**	4	452	6	833
03:00		0	83			0	**102**				
03:15		0	102			5	**110**				
03:30		2	89			1	93				
03:45		0	82	2	356	1	98	7	403	9	759
04:00		2	87			1	79				
04:15		3	87			2	82				
04:30		0	83			2	99				
04:45		2	85	7	342	1	94	6	354	13	696
05:00		3	**90**			5	105				
05:15		6	**106**			6	90				
05:30		17	**100**			9	108				
05:45		7	**100**	33	396	15	117	35	420	68	816
06:00		17	84			7	74				
06:15		19	55			19	68				
06:30		46	37			36	81				
06:45		76	52	158	228	38	51	100	274	258	502
07:00		92	35			64	40				
07:15		**157**	31			**90**	42				
07:30		**175**	37			**96**	33				
07:45		**188**	33	612	136	**146**	30	396	145	1008	281
08:00		**125**	30			**154**	49				
08:15		116	20			76	28				
08:30		74	15			73	33				
08:45		74	19	389	84	64	21	367	131	756	215
09:00		53	14			47	29				
09:15		49	26			54	29				
09:30		41	11			57	20				
09:45		48	9	191	60	53	16	211	94	402	154
10:00		40	12			48	16				
10:15		44	7			52	9				
10:30		43	4			49	5				
10:45		44	5	171	28	45	13	194	43	365	71
11:00		41	13			63	13				
11:15		44	6			40	4				
11:30		41	3			63	3				
11:45		41	3	167	25	42	4	208	24	375	49
Total		1737	2422	1737	2422	1536	2829	1536	2829	3273	5251
Combined Total		4159		4159		4365		4365		8524	
AM Peak		07:15				07:15					
Vol.		645				486					
P.H.F.		0.858				0.789					
PM Peak			05:00				02:30				
Vol.			396				494				
P.H.F.			0.846				0.858				
Percentage		41.8%	58.2%			35.2%	64.8%				
ADT/AADT		ADT 8,524		AADT 8,524							

Counts Unlimited, Inc
PO Box 1178
Corona, CA 92878
(951) 268-6268

City of Riverside
Victoria Avenue
E/ Madison Street
24 Hour Directional Volume Count

RIV007
Site Code: 042-12071
Date Start: 16-Feb-12
Date End: 16-Feb-12

Start Time	16-Feb-12 Thu	Eastbound Morning	Eastbound Afternoon	Hour Totals Morning	Hour Totals Afternoon	Westbound Morning	Westbound Afternoon	Hour Totals Morning	Hour Totals Afternoon	Combined Totals Morning	Combined Totals Afternoon
12:00		1	60			2	59				
12:15		0	50			1	41				
12:30		3	47			0	53				
12:45		3	52	7	209	1	50	4	203	11	412
01:00		1	55			1	45				
01:15		3	55			0	38				
01:30		0	46			1	49				
01:45		0	60	4	216	2	55	4	187	8	403
02:00		3	64			2	50				
02:15		1	67			1	59				
02:30		0	69			1	**73**				
02:45		2	82	6	282	0	**82**	4	264	10	546
03:00		1	79			0	**64**				
03:15		0	83			1	**70**				
03:30		1	81			2	72				
03:45		0	90	2	333	0	58	3	264	5	597
04:00		4	78			5	57				
04:15		4	**112**			1	57				
04:30		0	**103**			5	59				
04:45		1	**95**	9	388	5	61	16	234	25	622
05:00		3	**107**			7	57				
05:15		4	111			7	77				
05:30		8	93			17	66				
05:45		6	91	21	402	12	62	43	262	64	664
06:00		14	89			15	39				
06:15		9	59			29	49				
06:30		16	46			31	45				
06:45		35	54	74	248	56	37	131	170	205	418
07:00		64	59			66	30				
07:15		71	44			**88**	23				
07:30		**84**	29			**101**	25				
07:45		**101**	28	320	160	**105**	15	360	93	680	253
08:00		**100**	24			**114**	18				
08:15		**84**	39			80	19				
08:30		55	26			66	16				
08:45		46	21	285	110	83	10	343	63	628	173
09:00		45	25			57	21				
09:15		45	23			47	12				
09:30		32	15			65	19				
09:45		56	17	178	80	56	15	225	67	403	147
10:00		40	15			39	7				
10:15		34	16			35	10				
10:30		41	12			49	12				
10:45		37	6	152	49	39	6	162	35	314	84
11:00		44	13			52	8				
11:15		36	12			42	4				
11:30		43	9			53	4				
11:45		44	7	167	41	33	3	180	19	347	60
Total		1225	2518	1225	2518	1475	1861	1475	1861	2700	4379
Combined Total		3743		3743		3336		3336		7079	
AM Peak		07:30				07:15					
Vol.		369				408					
P.H.F.		0.913				0.895					
PM Peak			04:15				02:30				
Vol.			417				289				
P.H.F.			0.931				0.881				
Percentage		32.7%	67.3%			44.2%	55.8%				
ADT/AADT		ADT 7,079		AADT 7,079							

Counts Unlimited, Inc
PO Box 1178
Corona, CA 92878
(951) 268-6268

City of Riverside
Victoria Avenue
W/ Madison Street
24 Hour Directional Volume Count

RIV008
Site Code: 042-12071
Date Start: 16-Feb-12
Date End: 16-Feb-12

Start Time	16-Feb-12 Thu	Eastbound Morning	Eastbound Afternoon	Hour Totals Morning	Hour Totals Afternoon	Westbound Morning	Westbound Afternoon	Hour Totals Morning	Hour Totals Afternoon	Combined Totals Morning	Combined Totals Afternoon
12:00		0	46			4	47				
12:15		0	37			0	41				
12:30		2	42			0	40				
12:45		1	42	3	167	1	44	5	172	8	339
01:00		0	31			0	36				
01:15		0	52			1	35				
01:30		1	37			1	35				
01:45		0	52	1	172	1	50	3	156	4	328
02:00		0	43			1	48				
02:15		0	48			0	**54**				
02:30		0	50			1	**63**				
02:45		2	68	2	209	0	**73**	2	238	4	447
03:00		1	64			0	**56**				
03:15		0	62			1	54				
03:30		0	58			1	56				
03:45		0	70	1	254	1	55	3	221	4	475
04:00		5	66			4	45				
04:15		2	**85**			1	50				
04:30		1	**70**			3	61				
04:45		0	**77**	8	298	3	56	11	212	19	510
05:00		2	**85**			4	47				
05:15		4	80			5	58				
05:30		4	72			10	61				
05:45		4	68	14	305	12	48	31	214	45	519
06:00		11	66			11	35				
06:15		6	41			26	37				
06:30		14	28			27	42				
06:45		22	34	53	169	46	32	110	146	163	315
07:00		54	29			53	24				
07:15		57	26			64	21				
07:30		**83**	20			**82**	15				
07:45		**90**	23	284	98	**88**	12	287	72	571	170
08:00		**88**	17			**84**	15				
08:15		**69**	21			**68**	12				
08:30		51	15			51	15				
08:45		43	14	251	67	62	10	265	52	516	119
09:00		35	21			49	16				
09:15		41	11			36	11				
09:30		34	12			39	18				
09:45		42	9	152	53	46	10	170	55	322	108
10:00		39	7			33	7				
10:15		27	14			22	6				
10:30		30	7			36	11				
10:45		28	4	124	32	29	4	120	28	244	60
11:00		29	9			38	5				
11:15		24	4			30	4				
11:30		34	3			41	4				
11:45		29	4	116	20	30	4	139	17	255	37
Total		1009	1844	1009	1844	1146	1583	1146	1583	2155	3427
Combined Total		2853		2853		2729		2729		5582	
AM Peak		07:30				07:30					
Vol.		330				322					
P.H.F.		0.917				0.915					
PM Peak			04:15				02:15				
Vol.			317				246				
P.H.F.			0.932				0.842				
Percentage		35.4%	64.6%			42.0%	58.0%				
ADT/AADT		ADT 5,582		AADT 5,582							

Counts Unlimited, Inc
PO Box 1178
Corona, CA 92878
(951) 268-6268

City of Riverside
Victoria Avenue
E/ Adams Street
24 Hour Directional Volume Count

RIV009
Site Code: 042-12071
Date Start: 16-Feb-12
Date End: 16-Feb-12

Start Time	16-Feb-12 Thu	Eastbound Morning	Eastbound Afternoon	Hour Totals Morning	Hour Totals Afternoon	Westbound Morning	Westbound Afternoon	Hour Totals Morning	Hour Totals Afternoon	Combined Totals Morning	Combined Totals Afternoon
12:00		1	31			4	38				
12:15		0	24			0	25				
12:30		0	31			0	29				
12:45		1	35	2	121	0	40	4	132	6	253
01:00		0	33			1	35				
01:15		0	27			0	21				
01:30		1	30			0	32				
01:45		0	35	1	125	1	29	2	117	3	242
02:00		0	35			0	37				
02:15		0	38			0	45				
02:30		1	43			1	43				
02:45		0	56	1	172	0	**63**	1	188	2	360
03:00		0	59			0	**50**				
03:15		0	59			0	**50**				
03:30		0	57			0	**53**				
03:45		1	60	1	235	0	60	0	213	1	448
04:00		1	52			2	43				
04:15		1	**73**			0	47				
04:30		0	**57**			1	53				
04:45		0	**53**	2	235	2	47	5	190	7	425
05:00		0	**68**			2	50				
05:15		2	68			4	54				
05:30		3	52			4	52				
05:45		5	61	10	249	6	39	16	195	26	444
06:00		7	49			8	39				
06:15		6	35			17	36				
06:30		14	24			15	33				
06:45		16	27	43	135	30	24	70	132	113	267
07:00		36	26			37	15				
07:15		47	22			44	14				
07:30		**84**	21			**80**	10				
07:45		**85**	14	252	83	**65**	8	226	47	478	130
08:00		**79**	16			**65**	8				
08:15		**70**	17			**60**	17				
08:30		60	14			40	9				
08:45		37	7	246	54	48	5	213	39	459	93
09:00		26	16			41	10				
09:15		35	10			38	9				
09:30		19	9			32	14				
09:45		30	10	110	45	37	10	148	43	258	88
10:00		30	10			39	3				
10:15		20	13			16	2				
10:30		27	8			31	8				
10:45		24	7	101	38	22	3	108	16	209	54
11:00		17	4			28	1				
11:15		25	4			29	7				
11:30		22	0			35	2				
11:45		23	3	87	11	24	1	116	11	203	22
Total		856	1503	856	1503	909	1323	909	1323	1765	2826
Combined Total		2359		2359		2232		2232		4591	
AM Peak		07:30				07:30					
Vol.		318				270					
P.H.F.		0.935				0.844					
PM Peak			04:15				02:45				
Vol.			251				216				
P.H.F.			0.860				0.857				
Percentage		36.3%	63.7%			40.7%	59.3%				
ADT/AADT		ADT 4,591		AADT 4,591							

Counts Unlimited, Inc
PO Box 1178
Corona, CA 92878
(951) 268-6268

City of Riverside
Dufferin Street
W/ Washington Street
24 Hour Directional Volume Count

RIV010
Site Code: 042-12071
Date Start: 16-Feb-12
Date End: 16-Feb-12

Start Time	16-Feb-12 Thu	Eastbound Morning	Eastbound Afternoon	Hour Totals Morning	Hour Totals Afternoon	Westbound Morning	Westbound Afternoon	Hour Totals Morning	Hour Totals Afternoon	Combined Totals Morning	Combined Totals Afternoon
12:00		0	8			0	10				
12:15		0	7			0	8				
12:30		1	8			0	4				
12:45		0	10	1	33	1	6	1	28	2	61
01:00		1	17			0	6				
01:15		0	13			0	6				
01:30		1	7			0	5				
01:45		2	10	4	47	0	6	0	23	4	70
02:00		0	11			0	6				
02:15		0	14			2	5				
02:30		0	12			0	8				
02:45		0	14	0	51	0	7	2	26	2	77
03:00		0	10			1	7				
03:15		0	8			0	**6**				
03:30		0	20			1	**5**				
03:45		0	14	0	52	0	**8**	2	26	2	78
04:00		0	12			0	**11**				
04:15		0	**19**			0	6				
04:30		0	**16**			0	1				
04:45		1	**15**	1	62	1	5	1	23	2	85
05:00		1	**18**			0	5				
05:15		2	11			0	10				
05:30		3	17			0	6				
05:45		3	14	9	60	2	5	2	26	11	86
06:00		1	20			2	3				
06:15		7	10			1	8				
06:30		7	16			6	4				
06:45		9	3	24	49	8	2	17	17	41	66
07:00		13	12			12	1				
07:15		6	12			**15**	2				
07:30		7	5			**22**	2				
07:45		7	7	33	36	**21**	3	70	8	103	44
08:00		4	9			**15**	4				
08:15		8	4			8	3				
08:30		7	7			5	0				
08:45		7	6	26	26	11	0	39	7	65	33
09:00		8	7			3	0				
09:15		3	1			12	1				
09:30		10	4			5	3				
09:45		12	9	33	21	7	1	27	5	60	26
10:00		13	4			6	2				
10:15		7	6			4	1				
10:30		10	4			5	0				
10:45		8	2	38	16	5	2	20	5	58	21
11:00		**12**	5			2	0				
11:15		**13**	3			5	0				
11:30		**12**	1			2	0				
11:45		**11**	2	48	11	6	0	15	0	63	11
Total		217	464	217	464	196	194	196	194	413	658
Combined Total		681		681		390		390		1071	
AM Peak		11:00				07:15					
Vol.		48				73					
P.H.F.		0.923				0.830					
PM Peak			04:15				03:15				
Vol.			68				30				
P.H.F.			0.850				0.682				
Percentage		31.9%	68.1%			50.3%	49.7%				
ADT/AADT		ADT 1,071		AADT 1,071							

Counts Unlimited, Inc
PO Box 1178
Corona, CA 92878
(951) 268-6268

City of Riverside
Dufferin Avenue
E/ Adams Street
24 Hour Directional Volume Count

RIV011
Site Code: 042-12071
Date Start: 16-Feb-12
Date End: 16-Feb-12

Start Time	16-Feb-12 Thu	Eastbound Morning	Eastbound Afternoon	Hour Totals Morning	Hour Totals Afternoon	Westbound Morning	Westbound Afternoon	Hour Totals Morning	Hour Totals Afternoon	Combined Totals Morning	Combined Totals Afternoon
12:00		3	10			0	8				
12:15		0	9			1	18				
12:30		2	18			0	17				
12:45		1	8	6	45	0	15	1	58	7	103
01:00		1	13			0	8				
01:15		0	15			0	12				
01:30		0	21			0	16				
01:45		1	21	2	70	1	10	1	46	3	116
02:00		0	28			0	10				
02:15		1	18			0	14				
02:30		2	23			1	13				
02:45		0	36	3	105	0	18	1	55	4	160
03:00		0	40			0	12				
03:15		1	29			0	10				
03:30		0	24			0	15				
03:45		0	32	1	125	2	20	2	57	3	182
04:00		0	28			0	18				
04:15		0	**41**			1	13				
04:30		0	**34**			3	16				
04:45		0	**30**	0	133	4	16	8	63	8	196
05:00		0	**36**			2	15				
05:15		1	33			5	**18**				
05:30		1	41			6	**24**				
05:45		3	27	5	137	8	**21**	21	78	26	215
06:00		1	39			13	**18**				
06:15		4	16			18	10				
06:30		5	15			19	9				
06:45		10	13	20	83	36	13	86	50	106	133
07:00		15	19			29	4				
07:15		5	8			**42**	9				
07:30		10	15			**51**	3				
07:45		**22**	6	52	48	**63**	1	185	17	237	65
08:00		**21**	13			**33**	4				
08:15		**18**	8			30	4				
08:30		**11**	10			23	1				
08:45		5	8	55	39	27	5	113	14	168	53
09:00		8	9			19	3				
09:15		14	7			34	0				
09:30		10	9			24	1				
09:45		17	7	49	32	13	2	90	6	139	38
10:00		10	8			13	1				
10:15		18	3			16	2				
10:30		16	2			16	1				
10:45		8	4	52	17	24	1	69	5	121	22
11:00		17	4			23	0				
11:15		13	2			11	3				
11:30		18	1			9	1				
11:45		14	5	62	12	12	1	55	5	117	17
Total		307	846	307	846	632	454	632	454	939	1300
Combined Total		1153		1153		1086		1086		2239	
AM Peak		07:45				07:15					
Vol.		72				189					
P.H.F.		0.818				0.750					
PM Peak			04:15				05:15				
Vol.			141				81				
P.H.F.			0.860				0.844				
Percentage		26.6%	73.4%			58.2%	41.8%				
ADT/AADT		ADT 2,239		AADT 2,239							

Counts Unlimited, Inc
PO Box 1178
Corona, CA 92878
(951) 268-6268

City of Riverside
Dufferin Avenue
E/ Van Buren Boulevard
24 Hour Directional Volume Count

RIV012
Site Code: 042-12071
Date Start: 16-Feb-12
Date End: 16-Feb-12

Start Time	16-Feb-12 Thu	Eastbound Morning	Eastbound Afternoon	Hour Totals Morning	Hour Totals Afternoon	Westbound Morning	Westbound Afternoon	Hour Totals Morning	Hour Totals Afternoon	Combined Totals Morning	Combined Totals Afternoon
12:00		0	3			0	6				
12:15		0	4			0	1				
12:30		0	4			0	10				
12:45		0	3	0	14	1	10	1	27	1	41
01:00		0	4			0	3				
01:15		0	4			0	9				
01:30		0	7			0	6				
01:45		0	3	0	18	0	7	0	25	0	43
02:00		0	7			0	9				
02:15		0	**11**			0	5				
02:30		0	**7**			0	12				
02:45		0	**12**	0	37	0	11	0	37	0	74
03:00		1	**15**			0	15				
03:15		0	5			1	6				
03:30		0	4			0	7				
03:45		0	10	1	34	0	12	1	40	2	74
04:00		1	6			0	16				
04:15		0	1			1	3				
04:30		0	5			4	10				
04:45		0	4	1	16	0	**12**	5	41	6	57
05:00		2	9			0	**10**				
05:15		1	12			1	**10**				
05:30		0	1			1	**14**				
05:45		3	2	6	24	2	10	4	44	10	68
06:00		7	6			3	5				
06:15		5	3			0	5				
06:30		7	0			3	10				
06:45		5	6	24	15	5	3	11	23	35	38
07:00		9	1			5	3				
07:15		**16**	4			2	3				
07:30		**29**	3			6	2				
07:45		**34**	0	88	8	5	2	18	10	106	18
08:00		**10**	2			**12**	1				
08:15		4	4			**9**	0				
08:30		5	2			**6**	4				
08:45		7	2	26	10	**16**	2	43	7	69	17
09:00		6	0			4	1				
09:15		4	1			5	2				
09:30		6	0			2	2				
09:45		5	1	21	2	8	1	19	6	40	8
10:00		6	0			4	1				
10:15		12	4			9	1				
10:30		1	1			5	1				
10:45		2	1	21	6	8	1	26	4	47	10
11:00		4	0			4	1				
11:15		12	0			2	1				
11:30		4	0			1	0				
11:45		2	0	22	0	12	0	19	2	41	2
Total		210	184	210	184	147	266	147	266	357	450
Combined Total		394		394		413		413		807	
AM Peak		07:15				08:00					
Vol.		89				43					
P.H.F.		0.654				0.672					
PM Peak			02:15				04:45				
Vol.			45				46				
P.H.F.			0.750				0.719				
Percentage		53.3%	46.7%			35.6%	64.4%				
ADT/AADT		ADT 807		AADT 807							

Counts Unlimited, Inc
PO Box 1178
Corona, CA 92878
(951) 268-6268

City of Riverside
Dufferin Avenue
E/ McAllister Street
24 Hour Directional Volume Count

RIV013
Site Code: 042-12071
Date Start: 16-Feb-12
Date End: 16-Feb-12

Start Time	16-Feb-12 Thu	Eastbound Morning	Eastbound Afternoon	Hour Totals Morning	Hour Totals Afternoon	Westbound Morning	Westbound Afternoon	Hour Totals Morning	Hour Totals Afternoon	Combined Totals Morning	Combined Totals Afternoon
12:00		0	6			1	5				
12:15		0	11			1	9				
12:30		1	6			0	8				
12:45		1	8	2	31	1	6	3	28	5	59
01:00		1	6			0	4				
01:15		2	4			0	7				
01:30		0	18			0	11				
01:45		0	11	3	39	0	8	0	30	3	69
02:00		0	8			0	6				
02:15		0	11			0	5				
02:30		1	15			0	7				
02:45		2	18	3	52	0	7	0	25	3	77
03:00		0	13			0	6				
03:15		1	13			1	9				
03:30		0	16			0	**15**				
03:45		1	19	2	61	0	**8**	1	38	3	99
04:00		0	19			0	**11**				
04:15		0	25			0	**14**				
04:30		0	29			1	7				
04:45		0	**26**	0	99	3	10	4	42	4	141
05:00		1	**24**			5	6				
05:15		4	**38**			9	7				
05:30		3	**36**			7	9				
05:45		3	25	11	123	5	8	26	30	37	153
06:00		4	25			13	8				
06:15		5	22			17	3				
06:30		7	21			10	3				
06:45		7	17	23	85	11	4	51	18	74	103
07:00		**20**	11			17	1				
07:15		**17**	7			15	1				
07:30		**15**	7			**24**	4				
07:45		**18**	8	70	33	**24**	3	80	9	150	42
08:00		15	7			**27**	1				
08:15		12	4			**16**	0				
08:30		13	1			13	2				
08:45		7	7	47	19	16	0	72	3	119	22
09:00		9	6			8	2				
09:15		10	4			8	1				
09:30		9	0			1	3				
09:45		9	5	37	15	12	2	29	8	66	23
10:00		5	6			9	1				
10:15		13	5			9	0				
10:30		6	3			4	1				
10:45		5	4	29	18	5	3	27	5	56	23
11:00		9	2			10	1				
11:15		13	0			9	1				
11:30		8	0			4	0				
11:45		14	0	44	2	4	0	27	2	71	4
Total		271	577	271	577	320	238	320	238	591	815
Combined Total		848		848		558		558		1406	
AM Peak		07:00				07:30					
Vol.		70				91					
P.H.F.		0.875				0.843					
PM Peak			04:45				03:30				
Vol.			124				48				
P.H.F.			0.816				0.800				
Percentage		32.0%	68.0%			57.3%	42.7%				
ADT/AADT		ADT 1,406		AADT 1,406							

Counts Unlimited, Inc
PO Box 1178
Corona, CA 92878
(951) 268-6268

City of Riverside
Bradley Street
W/ Washington Street
24 Hour Directional Volume Count

RIV014
Site Code: 042-12071
Date Start: 16-Feb-12
Date End: 16-Feb-12

Start Time	16-Feb-12 Thu	Eastbound Morning	Eastbound Afternoon	Hour Totals Morning	Hour Totals Afternoon	Westbound Morning	Westbound Afternoon	Hour Totals Morning	Hour Totals Afternoon	Combined Totals Morning	Combined Totals Afternoon
12:00		3	14			1	18				
12:15		1	12			1	23				
12:30		5	23			2	19				
12:45		2	17	11	66	0	24	4	84	15	150
01:00		1	14			0	15				
01:15		0	20			0	14				
01:30		2	71			0	22				
01:45		0	31	3	136	2	17	2	68	5	204
02:00		0	36			2	24				
02:15		2	30			0	20				
02:30		1	35			1	27				
02:45		1	39	4	140	1	22	4	93	8	233
03:00		1	48			0	29				
03:15		0	43			0	25				
03:30		1	55			1	26				
03:45		0	33	2	179	2	26	3	106	5	285
04:00		0	57			0	17				
04:15		0	57			1	24				
04:30		2	63			8	20				
04:45		0	**59**	2	236	7	23	16	84	18	320
05:00		0	**69**			8	20				
05:15		3	**62**			12	**30**				
05:30		2	**71**			18	**28**				
05:45		8	39	13	241	34	**28**	72	106	85	347
06:00		7	46			20	**27**				
06:15		10	46			49	12				
06:30		18	31			44	13				
06:45		27	24	62	147	63	19	176	71	238	218
07:00		10	25			**47**	14				
07:15		16	22			**65**	8				
07:30		16	19			**84**	5				
07:45		**19**	5	61	71	**84**	2	280	29	341	100
08:00		**32**	19			38	6				
08:15		**22**	24			56	8				
08:30		**18**	11			38	2				
08:45		13	14	85	68	44	7	176	23	261	91
09:00		10	17			35	5				
09:15		18	9			37	6				
09:30		18	16			30	7				
09:45		21	8	67	50	23	4	125	22	192	72
10:00		15	12			19	2				
10:15		19	10			19	4				
10:30		22	2			17	1				
10:45		12	10	68	34	26	0	81	7	149	41
11:00		12	2			21	1				
11:15		20	2			24	8				
11:30		33	1			11	1				
11:45		16	5	81	10	18	1	74	11	155	21
Total		459	1378	459	1378	1013	704	1013	704	1472	2082
Combined Total		1837		1837		1717		1717		3554	
AM Peak		07:45				07:00					
Vol.		91				280					
P.H.F.		0.689				0.833					
PM Peak			04:45				05:15				
Vol.			261				113				
P.H.F.			0.919				0.942				
Percentage		25.0%	75.0%			59.0%	41.0%				
ADT/AADT		ADT 3,554		AADT 3,554							

Counts Unlimited, Inc
PO Box 1178
Corona, CA 92878
(951) 268-6268

City of Riverside
Lincoln Avenue
E/ Madison Street
24 Hour Directional Volume Count

RIV015
Site Code: 042-12071
Date Start: 16-Feb-12
Date End: 16-Feb-12

Start Time	16-Feb-12 Thu	Eastbound Morning	Eastbound Afternoon	Hour Totals Morning	Hour Totals Afternoon	Westbound Morning	Westbound Afternoon	Hour Totals Morning	Hour Totals Afternoon	Combined Totals Morning	Combined Totals Afternoon
12:00		1	47			5	48				
12:15		4	54			4	59				
12:30		4	58			3	54				
12:45		4	44	13	203	2	42	14	203	27	406
01:00		0	46			1	41				
01:15		0	37			2	35				
01:30		2	44			1	46				
01:45		3	58	5	185	2	47	6	169	11	354
02:00		0	63			0	44				
02:15		4	61			1	59				
02:30		2	51			3	68				
02:45		2	49	8	224	1	96	5	267	13	491
03:00		1	80			2	53				
03:15		2	70			0	82				
03:30		0	**74**			1	72				
03:45		0	**72**	3	296	2	72	5	279	8	575
04:00		1	**92**			4	67				
04:15		2	**91**			5	73				
04:30		0	69			10	62				
04:45		3	70	6	322	10	62	29	264	35	586
05:00		6	68			14	**71**				
05:15		4	66			18	**73**				
05:30		10	82			24	**79**				
05:45		15	66	35	282	38	**81**	94	304	129	586
06:00		11	72			28	56				
06:15		14	51			31	45				
06:30		21	48			29	62				
06:45		34	46	80	217	53	44	141	207	221	424
07:00		47	45			41	32				
07:15		**61**	39			**66**	33				
07:30		**70**	33			**101**	31				
07:45		**89**	23	267	140	**85**	15	293	111	560	251
08:00		**67**	37			**76**	19				
08:15		36	23			59	26				
08:30		47	21			39	22				
08:45		53	17	203	98	47	17	221	84	424	182
09:00		41	27			44	16				
09:15		28	19			28	13				
09:30		37	13			42	16				
09:45		39	13	145	72	39	5	153	50	298	122
10:00		23	21			39	10				
10:15		31	10			38	8				
10:30		45	11			40	13				
10:45		29	6	128	48	51	9	168	40	296	88
11:00		54	11			55	3				
11:15		51	11			37	8				
11:30		58	9			40	3				
11:45		38	6	201	37	61	3	193	17	394	54
Total		1094	2124	1094	2124	1322	1995	1322	1995	2416	4119
Combined Total		3218		3218		3317		3317		6535	
AM Peak		07:15				07:15					
Vol.		287				328					
P.H.F.		0.806				0.812					
PM Peak			03:30				05:00				
Vol.			329				304				
P.H.F.			0.894				0.792				
Percentage		34.0%	66.0%			39.9%	60.1%				
ADT/AADT		ADT 6,535		AADT 6,535							

APPENDIX C:
TRAFFIX WORKSHEETS

Crystal View Terrace/Green Orchard Place/Overlook Parkway Project TIA | *Appendix C*

APPENDIX C:
TRAFFIX WORKSHEETS
EXISTING CONDITIONS – GATES CLOSED

RECON
Traffic Impact Analysis

Overlook Parkway Extension
Existing
AM Peak Hour

Scenario Report

Scenario:	Existing AM
Command:	Existing AM
Volume:	Existing AM
Geometry:	Existing
Impact Fee:	Default Impact Fee
Trip Generation:	none
Trip Distribution:	none
Paths:	Default Path
Routes:	Default Route
Configuration:	Existing AM

Traffix 7.9.0215 (c) 2008 Dowling Assoc. Licensed to MMA, LONG BEACH, CA

Overlook Parkway Extension
Existing
AM Peak Hour

Impact Analysis Report
Level Of Service

Intersection	Base LOS	Base Del/ Veh	Base V/ C	Future LOS	Future Del/ Veh	Future V/ C	Change in
# 1 Madison St/SR-91 WB Ramps	C	27.4	0.579	C	27.4	0.579	+ 0.000 D/V
# 2 Madison St/SR-91 EB Ramps	C	26.9	0.466	C	26.9	0.466	+ 0.000 D/V
# 3 Madison St/Indiana Ave	D	36.0	0.709	D	36.0	0.709	+ 0.000 D/V
# 4 Madison St/Lincoln Ave	C	30.0	0.306	C	30.0	0.306	+ 0.000 D/V
# 6 Washington St/Indiana Ave	C	23.6	0.543	C	23.6	0.543	+ 0.000 D/V
# 7 Washington St/Lincoln Ave	C	24.5	0.881	C	24.5	0.881	+ 0.000 V/C
# 9 Washington St/Overlook Pkwy	B	13.4	0.375	B	13.4	0.375	+ 0.000 D/V
# 10 Riverside Ave-SR-91 WB/Arlingt	C	29.7	0.752	C	29.7	0.752	+ 0.000 D/V
# 11 Indiana Ave-SR-91 EB/Arlington	C	25.8	0.595	C	25.8	0.595	+ 0.000 D/V
# 12 Victoria Ave/Arlington Ave	D	42.7	0.925	D	42.7	0.925	+ 0.000 D/V
# 13 Alessandro Blvd/Arlington Ave	C	29.9	0.769	C	29.9	0.769	+ 0.000 D/V
# 14 Alessandro Blvd/Overlook Pkwy	B	19.4	0.702	B	19.4	0.702	+ 0.000 D/V
# 15 Alessandro Blvd/Trautwein Rd	C	28.4	0.731	C	28.4	0.731	+ 0.000 D/V
# 16 Crystal View Ter/Overlook Pkwy	A	6.9	0.007	A	6.9	0.007	+ 0.000 V/C
# 17 Kingdom Dr/Overlook Pkwy	A	8.7	0.000	A	8.7	0.000	+ 0.000 D/V
# 18 Kingdom Dr/Green Orchard Pl	A	8.4	0.000	A	8.4	0.000	+ 0.000 D/V
# 19 Trautwein Rd/John F. Kennedy D	C	30.6	0.827	C	30.6	0.827	+ 0.000 D/V
# 20 Washington St/Bradley St	C	21.1	0.648	C	21.1	0.648	+ 0.000 D/V
# 21 Alessandro Blvd/Via Vista Dr	C	23.8	0.795	C	23.8	0.795	+ 0.000 D/V
# 23 Mary St/Hawarden Dr	A	8.0	0.183	A	8.0	0.183	+ 0.000 V/C
# 24 Hawarden Dr/Overlook Pkwy	A	7.9	0.143	A	7.9	0.143	+ 0.000 V/C
# 25 Crystal View Ter/Berry Rd	A	7.0	0.105	A	7.0	0.105	+ 0.000 V/C
# 26 Corinthian Wy/Berry Rd	A	7.4	0.133	A	7.4	0.133	+ 0.000 V/C

Traffix 7.9.0215 (c) 2008 Dowling Assoc. Licensed to MMA, LONG BEACH, CA

Overlook Parkway Extension
Existing
AM Peak Hour

Intersection	Base LOS	Base Del/ Veh	Base V/ C	Future LOS	Future Del/ Veh	Future V/ C	Change in
# 28 Orozco Dr/Overlook Pkwy	A	9.8	0.000	A	9.8	0.000	+ 0.000 D/V
# 51 Madison St/Victoria Ave (North	A	9.7	0.401	A	9.7	0.401	+ 0.000 V/C
# 52 Madison St/Victoria Ave (South	A	9.3	0.382	A	9.3	0.382	+ 0.000 V/C
# 81 Washington St/Victoria Ave (No	B	14.5	0.570	B	14.5	0.570	+ 0.000 V/C
# 82 Washington St/Victoria Ave (So	C	15.8	0.677	C	15.8	0.677	+ 0.000 V/C
#221 Mary St/Victoria Ave (North)	C	21.5	0.812	C	21.5	0.812	+ 0.000 V/C
#222 Mary St/Victoria Ave (South)	C	16.2	0.623	C	16.2	0.623	+ 0.000 V/C

Traffix 7.9.0215 (c) 2008 Dowling Assoc. Licensed to MMA, LONG BEACH, CA

Overlook Parkway Extension
Existing
AM Peak Hour

Level Of Service Computation Report
2000 HCM Operations Method (Future Volume Alternative)

Intersection #1 Madison St/SR-91 WB Ramps

Cycle (sec): 100 Critical Vol./Cap.(X): 0.579
Loss Time (sec): 12 (Y+R=4.0 sec) Average Delay (sec/veh): 27.4
Optimal Cycle: 50 Level Of Service: C

Street Name:	Madison St						SR-91 WB Ramps					
Approach:	North Bound			South Bound			East Bound			West Bound		
Movement:	L -	T -	R	L -	T -	R	L -	T -	R	L -	T -	R
Control:	Protected			Protected			Split Phase			Split Phase		
Rights:	Include			Include			Include			Include		
Min. Green:	7	7	7	7	7	7	7	7	7	7	7	7
Lanes:	1 0	2 0	0	0 0	3 0	1	0 0	0 0	0	0 1	0 0	1
Volume Module:												
Base Vol:	342	647	0	0	584	269	0	0	0	266	1	206
Growth Adj:	1.00	1.00	1.00	1.00	1.00	1.00	1.00	1.00	1.00	1.00	1.00	1.00
Initial Bse:	342	647	0	0	584	269	0	0	0	266	1	206
Added Vol:	0	0	0	0	0	0	0	0	0	0	0	0
PasserByVol:	0	0	0	0	0	0	0	0	0	0	0	0
Initial Fut:	342	647	0	0	584	269	0	0	0	266	1	206
User Adj:	1.00	1.00	1.00	1.00	1.00	1.00	1.00	1.00	1.00	1.00	1.00	1.00
PHF Adj:	1.00	1.00	1.00	1.00	1.00	1.00	1.00	1.00	1.00	1.00	1.00	1.00
PHF Volume:	342	647	0	0	584	269	0	0	0	266	1	206
Reduct Vol:	0	0	0	0	0	0	0	0	0	0	0	0
Reduced Vol:	342	647	0	0	584	269	0	0	0	266	1	206
PCE Adj:	1.00	1.00	1.00	1.00	1.00	1.00	1.00	1.00	1.00	1.00	1.00	1.00
MLF Adj:	1.00	1.00	1.00	1.00	1.00	1.00	1.00	1.00	1.00	1.00	1.00	1.00
FinalVolume:	342	647	0	0	584	269	0	0	0	266	1	206
Saturation Flow Module:												
Sat/Lane:	1900	1900	1900	1900	1900	1900	1900	1900	1900	1900	1900	1900
Adjustment:	0.95	0.95	1.00	1.00	0.91	0.85	1.00	1.00	1.00	0.92	0.92	0.85
Lanes:	1.00	2.00	0.00	0.00	3.00	1.00	0.00	0.00	0.00	0.99	0.01	1.00
Final Sat.:	1805	3610	0	0	5187	1615	0	0	0	1734	7	1615
Capacity Analysis Module:												
Vol/Sat:	0.19	0.18	0.00	0.00	0.11	0.17	0.00	0.00	0.00	0.15	0.15	0.13
Crit Moves:	****					****					****	
Green/Cycle:	0.33	0.44	0.00	0.00	0.29	0.29	0.00	0.00	0.00	0.26	0.26	0.26
Volume/Cap:	0.58	0.41	0.00	0.00	0.39	0.58	0.00	0.00	0.00	0.58	0.58	0.48
Delay/Veh:	29.4	19.1	0.0	0.0	28.8	32.3	0.0	0.0	0.0	33.7	33.7	31.8
User DelAdj:	1.00	1.00	1.00	1.00	1.00	1.00	1.00	1.00	1.00	1.00	1.00	1.00
AdjDel/Veh:	29.4	19.1	0.0	0.0	28.8	32.3	0.0	0.0	0.0	33.7	33.7	31.8
LOS by Move:	C	B	A	A	C	C	A	A	A	C	C	C
HCM2kAvgQ:	9	7	0	0	5	8	0	0	0	8	8	6

Note: Queue reported is the number of cars per lane.

Traffix 7.9.0215 (c) 2008 Dowling Assoc. Licensed to MMA, LONG BEACH, CA

Overlook Parkway Extension
Existing
AM Peak Hour

Level Of Service Computation Report
2000 HCM Operations Method (Future Volume Alternative)

Intersection #2 Madison St/SR-91 EB Ramps

Cycle (sec):	100	Critical Vol./Cap.(X):	0.466
Loss Time (sec):	12 (Y+R=4.0 sec)	Average Delay (sec/veh):	26.9
Optimal Cycle:	50	Level Of Service:	C

Street Name:	Madison St								SR-91 EB Ramps					
Approach:	North Bound			South Bound			East Bound			West Bound				
Movement:	L	- T	- R	L	- T	- R	L	- T	- R	L	- T	- R		
Control:	Protected			Protected			Protected			Protected				
Rights:	Include			Include			Include			Include				
Min. Green:	7	7	7	7	7	7	7	7	7	7	7	7		
Lanes:	0 0	3 0	1	1 0	2 0	0	0 1	0 0	1	0 0	0 0	0		
Volume Module:														
Base Vol:	0	780	201	189	654	0	227	10	251	0	0	0		
Growth Adj:	1.00	1.00	1.00	1.00	1.00	1.00	1.00	1.00	1.00	1.00	1.00	1.00		
Initial Bse:	0	780	201	189	654	0	227	10	251	0	0	0		
Added Vol:	0	0	0	0	0	0	0	0	0	0	0	0		
PasserByVol:	0	0	0	0	0	0	0	0	0	0	0	0		
Initial Fut:	0	780	201	189	654	0	227	10	251	0	0	0		
User Adj:	1.00	1.00	1.00	1.00	1.00	1.00	1.00	1.00	1.00	1.00	1.00	1.00		
PHF Adj:	1.00	1.00	1.00	1.00	1.00	1.00	1.00	1.00	1.00	1.00	1.00	1.00		
PHF Volume:	0	780	201	189	654	0	227	10	251	0	0	0		
Reduct Vol:	0	0	0	0	0	0	0	0	0	0	0	0		
Reduced Vol:	0	780	201	189	654	0	227	10	251	0	0	0		
PCE Adj:	1.00	1.00	1.00	1.00	1.00	1.00	1.00	1.00	1.00	1.00	1.00	1.00		
MLF Adj:	1.00	1.00	1.00	1.00	1.00	1.00	1.00	1.00	1.00	1.00	1.00	1.00		
FinalVolume:	0	780	201	189	654	0	227	10	251	0	0	0		
Saturation Flow Module:														
Sat/Lane:	1900	1900	1900	1900	1900	1900	1900	1900	1900	1900	1900	1900		
Adjustment:	1.00	0.91	0.85	0.95	0.95	1.00	0.93	0.93	0.85	1.00	1.00	1.00		
Lanes:	0.00	3.00	1.00	1.00	2.00	0.00	0.96	0.04	1.00	0.00	0.00	0.00		
Final Sat.:	0	5187	1615	1805	3610	0	1692	75	1615	0	0	0		
Capacity Analysis Module:														
Vol/Sat:	0.00	0.15	0.12	0.10	0.18	0.00	0.13	0.13	0.16	0.00	0.00	0.00		
Crit Moves:		****		****					****					
Green/Cycle:	0.00	0.32	0.32	0.22	0.39	0.00	0.26	0.33	0.33	0.00	0.00	0.00		
Volume/Cap:	0.00	0.47	0.39	0.47	0.46	0.00	0.51	0.40	0.47	0.00	0.00	0.00		
Delay/Veh:	0.0	27.2	26.7	34.4	22.6	0.0	32.1	26.1	27.0	0.0	0.0	0.0		
User DelAdj:	1.00	1.00	1.00	1.00	1.00	1.00	1.00	1.00	1.00	1.00	1.00	1.00		
AdjDel/Veh:	0.0	27.2	26.7	34.4	22.6	0.0	32.1	26.1	27.0	0.0	0.0	0.0		
LOS by Move:	A	C	C	C	C	A	C	C	C	A	A	A		
HCM2kAvgQ:	0	7	5	5	8	0	7	6	6	0	0	0		

Note: Queue reported is the number of cars per lane.

Traffix 7.9.0215 (c) 2008 Dowling Assoc. Licensed to MMA, LONG BEACH, CA

Overlook Parkway Extension
Existing
AM Peak Hour

Level Of Service Computation Report
2000 HCM Operations Method (Future Volume Alternative)

Intersection #3 Madison St/Indiana Ave

Cycle (sec):	100	Critical Vol./Cap.(X):	0.709
Loss Time (sec):	16 (Y+R=4.0 sec)	Average Delay (sec/veh):	36.0
Optimal Cycle:	70	Level Of Service:	D

Street Name:	Madison St								Indiana Ave					
Approach:	North Bound			South Bound			East Bound			West Bound				
Movement:	L	- T	- R	L	- T	- R	L	- T	- R	L	- T	- R		
Control:	Protected			Protected			Protected			Protected				
Rights:	Include			Include			Include			Include				
Min. Green:	7	7	7	7	7	7	7	7	7	7	7	7		
Lanes:	1 0	1 1	0	1 0	1 1	0	1 0	1 1	0	1 0	1 1	0		
Volume Module:														
Base Vol:	40	488	18	313	397	143	187	530	32	20	195	292		
Growth Adj:	1.00	1.00	1.00	1.00	1.00	1.00	1.00	1.00	1.00	1.00	1.00	1.00		
Initial Bse:	40	488	18	313	397	143	187	530	32	20	195	292		
Added Vol:	0	0	0	0	0	0	0	0	0	0	0	0		
PasserByVol:	0	0	0	0	0	0	0	0	0	0	0	0		
Initial Fut:	40	488	18	313	397	143	187	530	32	20	195	292		
User Adj:	1.00	1.00	1.00	1.00	1.00	1.00	1.00	1.00	1.00	1.00	1.00	1.00		
PHF Adj:	1.00	1.00	1.00	1.00	1.00	1.00	1.00	1.00	1.00	1.00	1.00	1.00		
PHF Volume:	40	488	18	313	397	143	187	530	32	20	195	292		
Reduct Vol:	0	0	0	0	0	0	0	0	0	0	0	0		
Reduced Vol:	40	488	18	313	397	143	187	530	32	20	195	292		
PCE Adj:	1.00	1.00	1.00	1.00	1.00	1.00	1.00	1.00	1.00	1.00	1.00	1.00		
MLF Adj:	1.00	1.00	1.00	1.00	1.00	1.00	1.00	1.00	1.00	1.00	1.00	1.00		
FinalVolume:	40	488	18	313	397	143	187	530	32	20	195	292		
Saturation Flow Module:														
Sat/Lane:	1900	1900	1900	1900	1900	1900	1900	1900	1900	1900	1900	1900		
Adjustment:	0.95	0.95	0.95	0.95	0.91	0.91	0.95	0.94	0.94	0.95	0.86	0.86		
Lanes:	1.00	1.93	0.07	1.00	1.47	0.53	1.00	1.89	0.11	1.00	1.00	1.00		
Final Sat.:	1805	3464	128	1805	2548	918	1805	3374	204	1805	1643	1643		
Capacity Analysis Module:														
Vol/Sat:	0.02	0.14	0.14	0.17	0.16	0.16	0.10	0.16	0.16	0.01	0.12	0.18		
Crit Moves:		****		****			****					****		
Green/Cycle:	0.14	0.20	0.20	0.24	0.31	0.31	0.15	0.27	0.27	0.12	0.25	0.25		
Volume/Cap:	0.16	0.71	0.71	0.71	0.51	0.51	0.71	0.57	0.57	0.09	0.47	0.71		
Delay/Veh:	38.4	40.7	40.7	39.8	29.0	29.0	49.3	32.0	32.0	39.1	32.2	37.6		
User DelAdj:	1.00	1.00	1.00	1.00	1.00	1.00	1.00	1.00	1.00	1.00	1.00	1.00		
AdjDel/Veh:	38.4	40.7	40.7	39.8	29.0	29.0	49.3	32.0	32.0	39.1	32.2	37.6		
LOS by Move:	D	D	D	D	C	C	D	C	C	D	C	D		
HCM2kAvgQ:	1	9	9	10	8	8	7	8	8	1	6	10		

Note: Queue reported is the number of cars per lane.

Traffix 7.9.0215 (c) 2008 Dowling Assoc. Licensed to MMA, LONG BEACH, CA

Overlook Parkway Extension
Existing
AM Peak Hour

Level Of Service Computation Report
2000 HCM Operations Method (Future Volume Alternative)

Intersection #4 Madison St/Lincoln Ave

Cycle (sec): 100 Critical Vol./Cap.(X): 0.306
Loss Time (sec): 16 (Y+R=4.0 sec) Average Delay (sec/veh): 30.0
Optimal Cycle: 50 Level Of Service: C

Street Name:	Madison St						Lincoln Ave					
Approach:	North Bound			South Bound			East Bound			West Bound		
Movement:	L -	T -	R	L -	T -	R	L -	T -	R	L -	T -	R
Control:	Protected			Protected			Protected			Protected		
Rights:	Include			Include			Include			Include		
Min. Green:	7	7	7	7	7	7	7	7	7	7	7	7
Lanes:	1 0	0 1	0	1 0	0 1	0	1 0	0 1	0	1 0	1 1	0
Volume Module:												
Base Vol:	16	173	13	55	109	72	92	224	12	5	211	104
Growth Adj:	1.00	1.00	1.00	1.00	1.00	1.00	1.00	1.00	1.00	1.00	1.00	1.00
Initial Bse:	16	173	13	55	109	72	92	224	12	5	211	104
Added Vol:	0	0	0	0	0	0	0	0	0	0	0	0
PasserByVol:	0	0	0	0	0	0	0	0	0	0	0	0
Initial Fut:	16	173	13	55	109	72	92	224	12	5	211	104
User Adj:	1.00	1.00	1.00	1.00	1.00	1.00	1.00	1.00	1.00	1.00	1.00	1.00
PHF Adj:	1.00	1.00	1.00	1.00	1.00	1.00	1.00	1.00	1.00	1.00	1.00	1.00
PHF Volume:	16	173	13	55	109	72	92	224	12	5	211	104
Reduct Vol:	0	0	0	0	0	0	0	0	0	0	0	0
Reduced Vol:	16	173	13	55	109	72	92	224	12	5	211	104
PCE Adj:	1.00	1.00	1.00	1.00	1.00	1.00	1.00	1.00	1.00	1.00	1.00	1.00
MLF Adj:	1.00	1.00	1.00	1.00	1.00	1.00	1.00	1.00	1.00	1.00	1.00	1.00
FinalVolume:	16	173	13	55	109	72	92	224	12	5	211	104
Saturation Flow Module:												
Sat/Lane:	1900	1900	1900	1900	1900	1900	1900	1900	1900	1900	1900	1900
Adjustment:	0.95	0.99	0.99	0.95	0.94	0.94	0.95	0.99	0.99	0.95	0.90	0.90
Lanes:	1.00	0.93	0.07	1.00	0.60	0.40	1.00	0.95	0.05	1.00	1.34	0.66
Final Sat.:	1805	1750	131	1805	1076	710	1805	1789	96	1805	2300	1133
Capacity Analysis Module:												
Vol/Sat:	0.01	0.10	0.10	0.03	0.10	0.10	0.05	0.13	0.13	0.00	0.09	0.09
Crit Moves:		****		****				****		****		
Green/Cycle:	0.16	0.30	0.30	0.09	0.23	0.23	0.19	0.38	0.38	0.07	0.25	0.25
Volume/Cap:	0.06	0.33	0.33	0.33	0.44	0.44	0.26	0.33	0.33	0.04	0.36	0.36
Delay/Veh:	35.7	27.6	27.6	43.7	33.6	33.6	34.6	22.3	22.3	43.5	30.8	30.8
User DelAdj:	1.00	1.00	1.00	1.00	1.00	1.00	1.00	1.00	1.00	1.00	1.00	1.00
AdjDel/Veh:	35.7	27.6	27.6	43.7	33.6	33.6	34.6	22.3	22.3	43.5	30.8	30.8
LOS by Move:	D	C	C	D	C	C	C	C	C	D	C	C
HCM2kAvgQ:	0	5	5	2	5	5	3	5	5	0	4	4

Note: Queue reported is the number of cars per lane.

Traffix 7.9.0215 (c) 2008 Dowling Assoc. Licensed to MMA, LONG BEACH, CA

Overlook Parkway Extension
Existing
AM Peak Hour

Level Of Service Computation Report
2000 HCM Operations Method (Future Volume Alternative)

Intersection #6 Washington St/Indiana Ave

Cycle (sec): 100 Critical Vol./Cap.(X): 0.543
Loss Time (sec): 12 (Y+R=4.0 sec) Average Delay (sec/veh): 23.6
Optimal Cycle: 50 Level Of Service: C

Street Name:	Washington St						Indiana Ave					
Approach:	North Bound			South Bound			East Bound			West Bound		
Movement:	L -	T -	R	L -	T -	R	L -	T -	R	L -	T -	R
Control:	Permitted			Permitted			Protected			Protected		
Rights:	Ovl			Include			Include			Include		
Min. Green:	7	7	7	7	7	7	7	7	7	7	7	7
Lanes:	1 0	0 1	0	1 0	0 1	0	1 0	1 1	0	1 0	1 1	0
Volume Module:												
Base Vol:	233	3	321	2	1	2	8	751	99	68	336	12
Growth Adj:	1.00	1.00	1.00	1.00	1.00	1.00	1.00	1.00	1.00	1.00	1.00	1.00
Initial Bse:	233	3	321	2	1	2	8	751	99	68	336	12
Added Vol:	0	0	0	0	0	0	0	0	0	0	0	0
PasserByVol:	0	0	0	0	0	0	0	0	0	0	0	0
Initial Fut:	233	3	321	2	1	2	8	751	99	68	336	12
User Adj:	1.00	1.00	1.00	1.00	1.00	1.00	1.00	1.00	1.00	1.00	1.00	1.00
PHF Adj:	1.00	1.00	1.00	1.00	1.00	1.00	1.00	1.00	1.00	1.00	1.00	1.00
PHF Volume:	233	3	321	2	1	2	8	751	99	68	336	12
Reduct Vol:	0	0	0	0	0	0	0	0	0	0	0	0
Reduced Vol:	233	3	321	2	1	2	8	751	99	68	336	12
PCE Adj:	1.00	1.00	1.00	1.00	1.00	1.00	1.00	1.00	1.00	1.00	1.00	1.00
MLF Adj:	1.00	1.00	1.00	1.00	1.00	1.00	1.00	1.00	1.00	1.00	1.00	1.00
FinalVolume:	233	3	321	2	1	2	8	751	99	68	336	12
Saturation Flow Module:												
Sat/Lane:	1900	1900	1900	1900	1900	1900	1900	1900	1900	1900	1900	1900
Adjustment:	0.77	0.85	0.85	0.41	0.90	0.90	0.95	0.93	0.93	0.95	0.95	0.95
Lanes:	1.00	0.01	0.99	1.00	0.33	0.67	1.00	1.77	0.23	1.00	1.93	0.07
Final Sat.:	1457	15	1602	779	570	1140	1805	3135	413	1805	3468	124
Capacity Analysis Module:												
Vol/Sat:	0.16	0.20	0.20	0.00	0.00	0.00	0.00	0.24	0.24	0.04	0.10	0.10
Crit Moves:		****						****		****		
Green/Cycle:	0.37	0.37	0.44	0.37	0.37	0.37	0.21	0.44	0.44	0.07	0.30	0.30
Volume/Cap:	0.43	0.54	0.46	0.01	0.00	0.00	0.02	0.54	0.54	0.54	0.33	0.33
Delay/Veh:	24.3	25.9	20.1	20.0	19.9	19.9	31.0	20.9	20.9	49.5	27.6	27.6
User DelAdj:	1.00	1.00	1.00	1.00	1.00	1.00	1.00	1.00	1.00	1.00	1.00	1.00
AdjDel/Veh:	24.3	25.9	20.1	20.0	19.9	19.9	31.0	20.9	20.9	49.5	27.6	27.6
LOS by Move:	C	C	C	B	B	B	C	C	C	D	C	C
HCM2kAvgQ:	6	8	7	0	0	0	0	10	10	3	4	4

Note: Queue reported is the number of cars per lane.

Traffix 7.9.0215 (c) 2008 Dowling Assoc. Licensed to MMA, LONG BEACH, CA

Overlook Parkway Extension
Existing
AM Peak Hour

Level Of Service Computation Report
2000 HCM 4-Way Stop Method (Future Volume Alternative)

Intersection #7 Washington St/Lincoln Ave

Cycle (sec): 100 Critical Vol./Cap.(X): 0.881
Loss Time (sec): 0 (Y+R=4.0 sec) Average Delay (sec/veh): 24.5
Optimal Cycle: 0 Level Of Service: C

Street Name:	Washington St						Lincoln Ave					
Approach:	North Bound			South Bound			East Bound			West Bound		
Movement:	L -	T -	R	L -	T -	R	L -	T -	R	L -	T -	R
Control:	Stop Sign			Stop Sign			Stop Sign			Stop Sign		
Rights:	Include			Include			Include			Include		
Min. Green:	7	7	7	7	7	7	7	7	7	7	7	7
Lanes:	0 0	1! 0	0	0 0	1! 0	0	0 0	1! 0	0	0 1	0 0	1
Volume Module:												
Base Vol:	10	462	24	49	107	25	15	276	4	29	241	68
Growth Adj:	1.00	1.00	1.00	1.00	1.00	1.00	1.00	1.00	1.00	1.00	1.00	1.00
Initial Bse:	10	462	24	49	107	25	15	276	4	29	241	68
Added Vol:	0	0	0	0	0	0	0	0	0	0	0	0
PasserByVol:	0	0	0	0	0	0	0	0	0	0	0	0
Initial Fut:	10	462	24	49	107	25	15	276	4	29	241	68
User Adj:	1.00	1.00	1.00	1.00	1.00	1.00	1.00	1.00	1.00	1.00	1.00	1.00
PHF Adj:	1.00	1.00	1.00	1.00	1.00	1.00	1.00	1.00	1.00	1.00	1.00	1.00
PHF Volume:	10	462	24	49	107	25	15	276	4	29	241	68
Reduct Vol:	0	0	0	0	0	0	0	0	0	0	0	0
Reduced Vol:	10	462	24	49	107	25	15	276	4	29	241	68
PCE Adj:	1.00	1.00	1.00	1.00	1.00	1.00	1.00	1.00	1.00	1.00	1.00	1.00
MLF Adj:	1.00	1.00	1.00	1.00	1.00	1.00	1.00	1.00	1.00	1.00	1.00	1.00
FinalVolume:	10	462	24	49	107	25	15	276	4	29	241	68
Saturation Flow Module:												
Adjustment:	1.00	1.00	1.00	1.00	1.00	1.00	1.00	1.00	1.00	1.00	1.00	1.00
Lanes:	0.02	0.93	0.05	0.27	0.59	0.14	0.05	0.94	0.01	0.11	0.89	1.00
Final Sat.:	11	524	27	125	274	64	25	456	7	50	415	515
Capacity Analysis Module:												
Vol/Sat:	0.88	0.88	0.88	0.39	0.39	0.39	0.60	0.60	0.60	0.58	0.58	0.13
Crit Moves:		****			****			****			****	
Delay/Veh:	37.1	37.1	37.1	13.8	13.8	13.8	18.4	18.4	18.4	18.4	18.4	10.2
Delay Adj:	1.00	1.00	1.00	1.00	1.00	1.00	1.00	1.00	1.00	1.00	1.00	1.00
AdjDel/Veh:	37.1	37.1	37.1	13.8	13.8	13.8	18.4	18.4	18.4	18.4	18.4	10.2
LOS by Move:	E	E	E	B	B	B	C	C	C	C	C	B
ApproachDel:	37.1			13.8			18.4			16.8		
Delay Adj:	1.00			1.00			1.00			1.00		
ApprAdjDel:	37.1			13.8			18.4			16.8		
LOS by Appr:	E			B			C			C		
AllWayAvgQ:	4.4	4.4	4.4	0.5	0.5	0.5	1.2	1.2	1.2	1.1	1.1	0.1

Traffix 7.9.0215 (c) 2008 Dowling Assoc. Licensed to MMA, LONG BEACH, CA

Overlook Parkway Extension
Existing
AM Peak Hour

Note: Queue reported is the number of cars per lane.

Traffix 7.9.0215 (c) 2008 Dowling Assoc. Licensed to MMA, LONG BEACH, CA

Overlook Parkway Extension
Existing
AM Peak Hour

Level Of Service Computation Report
2000 HCM Operations Method (Future Volume Alternative)

Intersection #9 Washington St/Overlook Pkwy

Cycle (sec):	100	Critical Vol./Cap.(X):	0.375
Loss Time (sec):	12 (Y+R=4.0 sec)	Average Delay (sec/veh):	13.4
Optimal Cycle:	50	Level Of Service:	B

Street Name:	Washington St								Overlook Pkwy								
Approach:	North Bound				South Bound				East Bound				West Bound				
Movement:	L	-	T	-	R	L	-	T	-	R	L	-	T	-	R	L	-	T	-	R	L	-	T	-	R
Control:	Protected					Protected					Protected					Protected				
Rights:	Include					Include					Include					Ovl				
Min. Green:	7	7	7			7	7	7			7	7	7			7	7	7		
Lanes:	0	0	1	1	0	1	0	2	0	0	0	0	0	0	0	1	0	0	0	1
Volume Module:																				
Base Vol:	0	987		17		63	272		0		0		0		0	29		0		137
Growth Adj:	1.00	1.00		1.00		1.00	1.00		1.00		1.00		1.00		1.00	1.00		1.00		1.00
Initial Bse:	0	987		17		63	272		0		0		0		0	29		0		137
Added Vol:	0	0		0		0	0		0		0		0		0	0		0		0
PasserByVol:	0	0		0		0	0		0		0		0		0	0		0		0
Initial Fut:	0	987		17		63	272		0		0		0		0	29		0		137
User Adj:	1.00	1.00		1.00		1.00	1.00		1.00		1.00		1.00		1.00	1.00		1.00		1.00
PHF Adj:	1.00	1.00		1.00		1.00	1.00		1.00		1.00		1.00		1.00	1.00		1.00		1.00
PHF Volume:	0	987		17		63	272		0		0		0		0	29		0		137
Reduct Vol:	0	0		0		0	0		0		0		0		0	0		0		0
Reduced Vol:	0	987		17		63	272		0		0		0		0	29		0		137
PCE Adj:	1.00	1.00		1.00		1.00	1.00		1.00		1.00		1.00		1.00	1.00		1.00		1.00
MLF Adj:	1.00	1.00		1.00		1.00	1.00		1.00		1.00		1.00		1.00	1.00		1.00		1.00
FinalVolume:	0	987		17		63	272		0		0		0		0	29		0		137
Saturation Flow Module:																				
Sat/Lane:	1900	1900		1900		1900	1900		1900		1900		1900		1900	1900		1900		1900
Adjustment:	1.00	0.95		0.95		0.95	1.00		1.00		1.00		1.00		1.00	0.95		1.00		0.85
Lanes:	0.00	1.97		0.03		1.00	2.00		0.00		0.00		0.00		0.00	1.00		0.00		1.00
Final Sat.:	0	3538		61		1805	3610		0		0		0		0	1805		0		1615
Capacity Analysis Module:																				
Vol/Sat:	0.00	0.28		0.28		0.03	0.08		0.00		0.00		0.00		0.00	0.02		0.00		0.08
Crit Moves:		****				****										****				
Green/Cycle:	0.00	0.72		0.72		0.09	0.42		0.00		0.00		0.00		0.00	0.07		0.00		0.16
Volume/Cap:	0.00	0.39		0.39		0.39	0.18		0.00		0.00		0.00		0.00	0.23		0.00		0.53
Delay/Veh:	0.0	5.5		5.5		44.4	18.3		0.0		0.0		0.0		0.0	44.9		0.0		40.6
User DelAdj:	1.00	1.00		1.00		1.00	1.00		1.00		1.00		1.00		1.00	1.00		1.00		1.00
AdjDel/Veh:	0.0	5.5		5.5		44.4	18.3		0.0		0.0		0.0		0.0	44.9		0.0		40.6
LOS by Move:	A	A		A		D	B		A		A		A		A	D		A		D
HCM2kAvgQ:	0	6		6		2	3		0		0		0		0	1		0		5

Note: Queue reported is the number of cars per lane.

Traffix 7.9.0215 (c) 2008 Dowling Assoc. Licensed to MMA, LONG BEACH, CA

Overlook Parkway Extension
Existing
AM Peak Hour

Level Of Service Computation Report
2000 HCM Operations Method (Future Volume Alternative)

Intersection #10 Riverside Ave-SR-91 WB/Arlington Ave

Cycle (sec):	100	Critical Vol./Cap.(X):	0.752
Loss Time (sec):	12 (Y+R=4.0 sec)	Average Delay (sec/veh):	29.7
Optimal Cycle:	67	Level Of Service:	C

Street Name:	Riverside Ave-SR-91 WB								Arlington Ave								
Approach:	North Bound				South Bound				East Bound				West Bound				
Movement:	L	-	T	-	R	L	-	T	-	R	L	-	T	-	R	L	-	T	-	R	L	-	T	-	R
Control:	Protected					Protected					Protected					Protected				
Rights:	Include					Ovl					Ignore					Ignore				
Min. Green:	7	7	7			7	7	7			7	7	7			7	7	7		
Lanes:	0	0	0	0	0	1	1	0	0	1	1	0	3	0	1	1	0	2	0	1
Volume Module:																				
Base Vol:	0		0		0	477		44		473	66		710		117	485		881		248
Growth Adj:	1.00	1.00		1.00		1.00	1.00		1.00		1.00	1.00		1.00		1.00	1.00		1.00	
Initial Bse:	0		0		0	477		44		473	66		710		117	485		881		248
Added Vol:	0		0		0	0		0		0	0		0		0	0		0		0
PasserByVol:	0		0		0	0		0		0	0		0		0	0		0		0
Initial Fut:	0		0		0	477		44		473	66		710		117	485		881		248
User Adj:	1.00	1.00		1.00		1.00	1.00		1.00		1.00	1.00		0.00		1.00	1.00		0.00	
PHF Adj:	1.00	1.00		1.00		1.00	1.00		1.00		1.00	1.00		0.00		1.00	1.00		0.00	
PHF Volume:	0		0		0	477		44		473	66		710		0	485		881		0
Reduct Vol:	0		0		0	0		0		0	0		0		0	0		0		0
Reduced Vol:	0		0		0	477		44		473	66		710		0	485		881		0
PCE Adj:	1.00	1.00		1.00		1.00	1.00		1.00		1.00	1.00		0.00		1.00	1.00		0.00	
MLF Adj:	1.00	1.00		1.00		1.00	1.00		1.00		1.00	1.00		0.00		1.00	1.00		0.00	
FinalVolume:	0		0		0	477		44		473	66		710		0	485		881		0
Saturation Flow Module:																				
Sat/Lane:	1900	1900		1900		1900	1900		1900		1900	1900		1900		1900	1900		1900	
Adjustment:	1.00	1.00		1.00		0.93	0.93		0.85		0.95	0.91		1.00		0.95	0.95		1.00	
Lanes:	0.00	0.00		0.00		1.83	0.17		1.00		1.00	3.00		1.00		1.00	2.00		1.00	
Final Sat.:	0		0		0	3229	298		1615		1805	5187		1900		1805	3610		1900	
Capacity Analysis Module:																				
Vol/Sat:	0.00	0.00		0.00		0.15	0.15		0.29		0.04	0.14		0.00		0.27	0.24		0.00	
Crit Moves:									****			****				****				
Green/Cycle:	0.00	0.00		0.00		0.26	0.31		0.44		0.13	0.19		0.00		0.38	0.44		0.00	
Volume/Cap:	0.00	0.00		0.00		0.57	0.47		0.67		0.29	0.71		0.00		0.71	0.55		0.00	
Delay/Veh:	0.0	0.0		0.0		33.1	28.1		24.7		40.3	40.3		0.0		30.2	21.1		0.0	
User DelAdj:	1.00	1.00		1.00		1.00	1.00		1.00		1.00	1.00		1.00		1.00	1.00		1.00	
AdjDel/Veh:	0.0	0.0		0.0		33.1	28.1		24.7		40.3	40.3		0.0		30.2	21.1		0.0	
LOS by Move:	A	A		A		C	C		C		D	D		A		C	C		A	
HCM2kAvgQ:	0	0		0		8	7		12		2	9		0		14	11		0	

Note: Queue reported is the number of cars per lane.

Traffix 7.9.0215 (c) 2008 Dowling Assoc. Licensed to MMA, LONG BEACH, CA

Overlook Parkway Extension
Existing
AM Peak Hour

Level Of Service Computation Report
2000 HCM Operations Method (Future Volume Alternative)

Intersection #11 Indiana Ave-SR-91 EB/Arlington Ave

Cycle (sec): 100 Critical Vol./Cap.(X): 0.595
Loss Time (sec): 12 (Y+R=4.0 sec) Average Delay (sec/veh): 25.8
Optimal Cycle: 50 Level Of Service: C

Street Name:	Indiana Ave-SR-91 EB						Arlington Ave					
Approach:	North Bound			South Bound			East Bound			West Bound		
Movement:	L - T - R			L - T - R			L - T - R			L - T - R		
Control:	Protected			Protected			Protected			Protected		
Rights:	Ovl			Include			Ovl			Ignore		
Min. Green:	7	7	7	7	7	7	7	7	7	7	7	7
Lanes:	1 1	1 0	1	0 0	0 0	0	1 0	2 0	1	1 0	4 0	1
Volume Module:												
Base Vol:	203	400	400	0	0	0	254	729	188	119	1388	364
Growth Adj:	1.00	1.00	1.00	1.00	1.00	1.00	1.00	1.00	1.00	1.00	1.00	1.00
Initial Bse:	203	400	400	0	0	0	254	729	188	119	1388	364
Added Vol:	0	0	0	0	0	0	0	0	0	0	0	0
PasserByVol:	0	0	0	0	0	0	0	0	0	0	0	0
Initial Fut:	203	400	400	0	0	0	254	729	188	119	1388	364
User Adj:	1.00	1.00	1.00	1.00	1.00	1.00	1.00	1.00	1.00	1.00	1.00	0.00
PHF Adj:	1.00	1.00	1.00	1.00	1.00	1.00	1.00	1.00	1.00	1.00	1.00	0.00
PHF Volume:	203	400	400	0	0	0	254	729	188	119	1388	0
Reduct Vol:	0	0	0	0	0	0	0	0	0	0	0	0
Reduced Vol:	203	400	400	0	0	0	254	729	188	119	1388	0
PCE Adj:	1.00	1.00	1.00	1.00	1.00	1.00	1.00	1.00	1.00	1.00	1.00	0.00
MLF Adj:	1.00	1.00	1.00	1.00	1.00	1.00	1.00	1.00	1.00	1.00	1.00	0.00
FinalVolume:	203	400	400	0	0	0	254	729	188	119	1388	0
Saturation Flow Module:												
Sat/Lane:	1900	1900	1900	1900	1900	1900	1900	1900	1900	1900	1900	1900
Adjustment:	0.92	0.92	0.85	1.00	1.00	1.00	0.95	0.95	0.85	0.95	0.91	1.00
Lanes:	1.01	1.99	1.00	0.00	0.00	0.00	1.00	2.00	1.00	1.00	4.00	1.00
Final Sat.:	1768	3484	1615	0	0	0	1805	3610	1615	1805	6916	1900
Capacity Analysis Module:												
Vol/Sat:	0.11	0.11	0.25	0.00	0.00	0.00	0.14	0.20	0.12	0.07	0.20	0.00
Crit Moves:			****				****				****	
Green/Cycle:	0.23	0.30	0.45	0.00	0.00	0.00	0.24	0.43	0.66	0.15	0.34	0.00
Volume/Cap:	0.50	0.38	0.55	0.00	0.00	0.00	0.59	0.47	0.18	0.44	0.59	0.00
Delay/Veh:	33.8	27.7	21.0	0.0	0.0	0.0	35.9	20.6	6.6	39.9	27.6	0.0
User DelAdj:	1.00	1.00	1.00	1.00	1.00	1.00	1.00	1.00	1.00	1.00	1.00	1.00
AdjDel/Veh:	33.8	27.7	21.0	0.0	0.0	0.0	35.9	20.6	6.6	39.9	27.6	0.0
LOS by Move:	C	C	C	A	A	A	D	C	A	D	C	A
HCM2kAvgQ:	6	5	9	0	0	0	8	8	2	4	10	0

Note: Queue reported is the number of cars per lane.

Traffix 7.9.0215 (c) 2008 Dowling Assoc. Licensed to MMA, LONG BEACH, CA

Overlook Parkway Extension
Existing
AM Peak Hour

Level Of Service Computation Report
2000 HCM Operations Method (Future Volume Alternative)

Intersection #12 Victoria Ave/Arlington Ave

Cycle (sec): 100 Critical Vol./Cap.(X): 0.925
Loss Time (sec): 16 (Y+R=4.0 sec) Average Delay (sec/veh): 42.7
Optimal Cycle: 127 Level Of Service: D

Street Name:	Victoria Ave						Arlington Ave					
Approach:	North Bound			South Bound			East Bound			West Bound		
Movement:	L - T - R			L - T - R			L - T - R			L - T - R		
Control:	Protected			Protected			Protected			Protected		
Rights:	Ovl			Include			Include			Include		
Min. Green:	7	7	7	7	7	7	7	7	7	7	7	7
Lanes:	1 0	1 0	1	1 0	1 0	1	1 0	1 1	0	1 0	1 1	0
Volume Module:												
Base Vol:	24	413	324	128	326	98	146	604	12	405	1244	197
Growth Adj:	1.00	1.00	1.00	1.00	1.00	1.00	1.00	1.00	1.00	1.00	1.00	1.00
Initial Bse:	24	413	324	128	326	98	146	604	12	405	1244	197
Added Vol:	0	0	0	0	0	0	0	0	0	0	0	0
PasserByVol:	0	0	0	0	0	0	0	0	0	0	0	0
Initial Fut:	24	413	324	128	326	98	146	604	12	405	1244	197
User Adj:	1.00	1.00	1.00	1.00	1.00	1.00	1.00	1.00	1.00	1.00	1.00	1.00
PHF Adj:	1.00	1.00	1.00	1.00	1.00	1.00	1.00	1.00	1.00	1.00	1.00	1.00
PHF Volume:	24	413	324	128	326	98	146	604	12	405	1244	197
Reduct Vol:	0	0	0	0	0	0	0	0	0	0	0	0
Reduced Vol:	24	413	324	128	326	98	146	604	12	405	1244	197
PCE Adj:	1.00	1.00	1.00	1.00	1.00	1.00	1.00	1.00	1.00	1.00	1.00	1.00
MLF Adj:	1.00	1.00	1.00	1.00	1.00	1.00	1.00	1.00	1.00	1.00	1.00	1.00
FinalVolume:	24	413	324	128	326	98	146	604	12	405	1244	197
Saturation Flow Module:												
Sat/Lane:	1900	1900	1900	1900	1900	1900	1900	1900	1900	1900	1900	1900
Adjustment:	0.95	1.00	0.85	0.95	1.00	0.85	0.95	0.95	0.95	0.95	0.93	0.93
Lanes:	1.00	1.00	1.00	1.00	1.00	1.00	1.00	1.96	0.04	1.00	1.73	0.27
Final Sat.:	1805	1900	1615	1805	1900	1615	1805	3529	70	1805	3051	483
Capacity Analysis Module:												
Vol/Sat:	0.01	0.22	0.20	0.07	0.17	0.06	0.08	0.17	0.17	0.22	0.41	0.41
Crit Moves:		****		****			****				****	
Green/Cycle:	0.09	0.24	0.53	0.08	0.22	0.22	0.09	0.23	0.23	0.30	0.44	0.44
Volume/Cap:	0.15	0.92	0.38	0.92	0.78	0.27	0.92	0.75	0.75	0.75	0.92	0.92
Delay/Veh:	42.4	62.5	13.8	100.0	45.3	32.7	95.2	39.7	39.7	37.4	36.1	36.1
User DelAdj:	1.00	1.00	1.00	1.00	1.00	1.00	1.00	1.00	1.00	1.00	1.00	1.00
AdjDel/Veh:	42.4	62.5	13.8	100.0	45.3	32.7	95.2	39.7	39.7	37.4	36.1	36.1
LOS by Move:	D	E	B	F	D	C	F	D	D	D	D	D
HCM2kAvgQ:	1	17	6	7	11	3	8	11	11	13	27	27

Note: Queue reported is the number of cars per lane.

Traffix 7.9.0215 (c) 2008 Dowling Assoc. Licensed to MMA, LONG BEACH, CA

Overlook Parkway Extension
Existing
AM Peak Hour

Level Of Service Computation Report
2000 HCM Operations Method (Future Volume Alternative)

Intersection #13 Alessandro Blvd/Arlington Ave

Cycle (sec): 100 Critical Vol./Cap.(X): 0.769
Loss Time (sec): 16 (Y+R=4.0 sec) Average Delay (sec/veh): 29.9
Optimal Cycle: 80 Level Of Service: C

Street Name:	Alessandro Blvd						Arlington Ave					
Approach:	North Bound			South Bound			East Bound			West Bound		
Movement:	L - T - R			L - T - R			L - T - R			L - T - R		
Control:	Protected			Protected			Protected			Protected		
Rights:	Ovl			Include			Ovl			Ovl		
Min. Green:	7	7	7	7	7	7	7	7	7	7	7	7
Lanes:	2 0	2 0	1	2 0	2 1	0	1 0	2 0	2	2 0	2 0	1
Volume Module:												
Base Vol:	1146	1517	362	228	419	46	37	476	561	101	505	294
Growth Adj:	1.00	1.00	1.00	1.00	1.00	1.00	1.00	1.00	1.00	1.00	1.00	1.00
Initial Bse:	1146	1517	362	228	419	46	37	476	561	101	505	294
Added Vol:	0	0	0	0	0	0	0	0	0	0	0	0
PasserByVol:	0	0	0	0	0	0	0	0	0	0	0	0
Initial Fut:	1146	1517	362	228	419	46	37	476	561	101	505	294
User Adj:	1.00	1.00	1.00	1.00	1.00	1.00	1.00	1.00	1.00	1.00	1.00	1.00
PHF Adj:	1.00	1.00	1.00	1.00	1.00	1.00	1.00	1.00	1.00	1.00	1.00	1.00
PHF Volume:	1146	1517	362	228	419	46	37	476	561	101	505	294
Reduct Vol:	0	0	0	0	0	0	0	0	0	0	0	0
Reduced Vol:	1146	1517	362	228	419	46	37	476	561	101	505	294
PCE Adj:	1.00	1.00	1.00	1.00	1.00	1.00	1.00	1.00	1.00	1.00	1.00	1.00
MLF Adj:	1.00	1.00	1.00	1.00	1.00	1.00	1.00	1.00	1.00	1.00	1.00	1.00
FinalVolume:	1146	1517	362	228	419	46	37	476	561	101	505	294
Saturation Flow Module:												
Sat/Lane:	1900	1900	1900	1900	1900	1900	1900	1900	1900	1900	1900	1900
Adjustment:	0.92	0.95	0.85	0.92	0.90	0.90	0.95	0.95	0.75	0.92	0.95	0.85
Lanes:	2.00	2.00	1.00	2.00	2.70	0.30	1.00	2.00	2.00	2.00	2.00	1.00
Final Sat.:	3502	3610	1615	3502	4604	505	1805	3610	2842	3502	3610	1615
Capacity Analysis Module:												
Vol/Sat:	0.33	0.42	0.22	0.07	0.09	0.09	0.02	0.13	0.20	0.03	0.14	0.18
Crit Moves:		****		****			****				****	
Green/Cycle:	0.47	0.52	0.60	0.08	0.13	0.13	0.07	0.16	0.63	0.08	0.17	0.25
Volume/Cap:	0.70	0.81	0.37	0.81	0.70	0.70	0.29	0.83	0.32	0.34	0.81	0.72
Delay/Veh:	22.4	22.9	10.5	61.5	45.0	45.0	45.4	51.0	8.8	43.9	47.8	40.4
User DelAdj:	1.00	1.00	1.00	1.00	1.00	1.00	1.00	1.00	1.00	1.00	1.00	1.00
AdjDel/Veh:	22.4	22.9	10.5	61.5	45.0	45.0	45.4	51.0	8.8	43.9	47.8	40.4
LOS by Move:	C	C	B	E	D	D	D	D	A	D	D	D
HCM2kAvgQ:	15	22	6	6	6	6	1	10	5	2	10	10

Note: Queue reported is the number of cars per lane.

Traffix 7.9.0215 (c) 2008 Dowling Assoc. Licensed to MMA, LONG BEACH, CA

Overlook Parkway Extension
Existing
AM Peak Hour

Level Of Service Computation Report
2000 HCM Operations Method (Future Volume Alternative)

Intersection #14 Alessandro Blvd/Overlook Pkwy

Cycle (sec): 100 Critical Vol./Cap.(X): 0.702
Loss Time (sec): 16 (Y+R=4.0 sec) Average Delay (sec/veh): 19.4
Optimal Cycle: 69 Level Of Service: B

Street Name:	Alessandro Blvd						Overlook Pkwy					
Approach:	North Bound			South Bound			East Bound			West Bound		
Movement:	L - T - R			L - T - R			L - T - R			L - T - R		
Control:	Protected			Protected			Protected			Protected		
Rights:	Include			Include			Include			Include		
Min. Green:	7	7	7	7	7	7	7	7	7	7	7	7
Lanes:	1 0	3 0	1	1 0	2 1	0	1 0	1 1	0	3 0	0 1	0
Volume Module:												
Base Vol:	10	2613	777	28	903	4	19	16	29	241	15	84
Growth Adj:	1.00	1.00	1.00	1.00	1.00	1.00	1.00	1.00	1.00	1.00	1.00	1.00
Initial Bse:	10	2613	777	28	903	4	19	16	29	241	15	84
Added Vol:	0	0	0	0	0	0	0	0	0	0	0	0
PasserByVol:	0	0	0	0	0	0	0	0	0	0	0	0
Initial Fut:	10	2613	777	28	903	4	19	16	29	241	15	84
User Adj:	1.00	1.00	1.00	1.00	1.00	1.00	1.00	1.00	1.00	1.00	1.00	1.00
PHF Adj:	1.00	1.00	1.00	1.00	1.00	1.00	1.00	1.00	1.00	1.00	1.00	1.00
PHF Volume:	10	2613	777	28	903	4	19	16	29	241	15	84
Reduct Vol:	0	0	0	0	0	0	0	0	0	0	0	0
Reduced Vol:	10	2613	777	28	903	4	19	16	29	241	15	84
PCE Adj:	1.00	1.00	1.00	1.00	1.00	1.00	1.00	1.00	1.00	1.00	1.00	1.00
MLF Adj:	1.00	1.00	1.00	1.00	1.00	1.00	1.00	1.00	1.00	1.00	1.00	1.00
FinalVolume:	10	2613	777	28	903	4	19	16	29	241	15	84
Saturation Flow Module:												
Sat/Lane:	1900	1900	1900	1900	1900	1900	1900	1900	1900	1900	1900	1900
Adjustment:	0.95	0.91	0.85	0.95	0.91	0.91	0.95	0.86	0.86	0.92	0.87	0.87
Lanes:	1.00	3.00	1.00	1.00	2.99	0.01	1.00	1.00	1.00	3.00	0.15	0.85
Final Sat.:	1805	5187	1615	1805	5159	23	1805	1630	1630	5253	251	1407
Capacity Analysis Module:												
Vol/Sat:	0.01	0.50	0.48	0.02	0.18	0.18	0.01	0.01	0.02	0.05	0.06	0.06
Crit Moves:		****		****			****				****	
Green/Cycle:	0.20	0.63	0.63	0.07	0.50	0.50	0.07	0.07	0.07	0.07	0.07	0.07
Volume/Cap:	0.03	0.80	0.77	0.22	0.35	0.35	0.15	0.14	0.25	0.64	0.80	0.80
Delay/Veh:	32.3	15.7	17.1	44.8	15.4	15.4	44.3	43.7	44.5	48.7	76.3	76.3
User DelAdj:	1.00	1.00	1.00	1.00	1.00	1.00	1.00	1.00	1.00	1.00	1.00	1.00
AdjDel/Veh:	32.3	15.7	17.1	44.8	15.4	15.4	44.3	43.7	44.5	48.7	76.3	76.3
LOS by Move:	C	B	B	D	B	B	D	D	D	D	E	E
HCM2kAvgQ:	0	24	19	1	6	6	1	1	1	4	5	5

Note: Queue reported is the number of cars per lane.

Traffix 7.9.0215 (c) 2008 Dowling Assoc. Licensed to MMA, LONG BEACH, CA

Overlook Parkway Extension
Existing
AM Peak Hour

Level Of Service Computation Report
2000 HCM Operations Method (Future Volume Alternative)

Intersection #15 Alessandro Blvd/Trautwein Rd

Cycle (sec):	100	Critical Vol./Cap.(X):	0.731
Loss Time (sec):	12 (Y+R=4.0 sec)	Average Delay (sec/veh):	28.4
Optimal Cycle:	64	Level Of Service:	C

Street Name:	Alessandro Blvd								Trautwein Rd								
Approach:	North Bound				South Bound				East Bound				West Bound				
Movement:	L	-	T	-	R	L	-	T	-	R	L	-	T	-	R	L	-	T	-	R	L	-	T	-	R
Control:	Protected					Protected					Protected					Protected				
Rights:	Include					Ignore					Ignore					Include				
Min. Green:	7	7	7			7	7	7			7	7	7			7	7	7		
Lanes:	2	0	3	0	0	0	0	3	0	1	3	0	0	0	1	0	0	0	0	0
Volume Module:																				
Base Vol:	104	1642		0		0	637		582		1718		0		126		0		0	
Growth Adj:	1.00	1.00		1.00		1.00	1.00		1.00		1.00		1.00		1.00		1.00		1.00	
Initial Bse:	104	1642		0		0	637		582		1718		0		126		0		0	
Added Vol:	0	0		0		0	0		0		0		0		0		0		0	
PasserByVol:	0	0		0		0	0		0		0		0		0		0		0	
Initial Fut:	104	1642		0		0	637		582		1718		0		126		0		0	
User Adj:	1.00	1.00		1.00		1.00	1.00		0.00		1.00		1.00		0.00		1.00		1.00	
PHF Adj:	1.00	1.00		1.00		1.00	1.00		0.00		1.00		1.00		0.00		1.00		1.00	
PHF Volume:	104	1642		0		0	637		0		1718		0		0		0		0	
Reduct Vol:	0	0		0		0	0		0		0		0		0		0		0	
Reduced Vol:	104	1642		0		0	637		0		1718		0		0		0		0	
PCE Adj:	1.00	1.00		1.00		1.00	1.00		0.00		1.00		1.00		0.00		1.00		1.00	
MLF Adj:	1.00	1.00		1.00		1.00	1.00		0.00		1.00		1.00		0.00		1.00		1.00	
FinalVolume:	104	1642		0		0	637		0		1718		0		0		0		0	
Saturation Flow Module:																				
Sat/Lane:	1900	1900		1900		1900	1900		1900		1900		1900		1900		1900		1900	
Adjustment:	0.92	0.91		1.00		1.00	0.91		1.00		0.92		1.00		1.00		1.00		1.00	
Lanes:	2.00	3.00		0.00		0.00	3.00		1.00		3.00		0.00		1.00		0.00		0.00	
Final Sat.:	3502	5187		0		0	5187		1900		5253		0		1900		0		0	
Capacity Analysis Module:																				
Vol/Sat:	0.03	0.32		0.00		0.00	0.12		0.00		0.33		0.00		0.00		0.00		0.00	
Crit Moves:		****				****					****									
Green/Cycle:	0.17	0.40		0.00		0.00	0.30		0.00		0.41		0.00		0.00		0.00		0.00	
Volume/Cap:	0.17	0.79		0.00		0.00	0.41		0.00		0.79		0.00		0.00		0.00		0.00	
Delay/Veh:	35.6	28.7		0.0		0.0	28.2		0.0		27.8		0.0		0.0		0.0		0.0	
User DelAdj:	1.00	1.00		1.00		1.00	1.00		1.00		1.00		1.00		1.00		1.00		1.00	
AdjDel/Veh:	35.6	28.7		0.0		0.0	28.2		0.0		27.8		0.0		0.0		0.0		0.0	
LOS by Move:	D	C		A		A	C		A		C		A		A		A		A	
HCM2kAvgQ:	1	18		0		0	6		0		18		0		0		0		0	

Note: Queue reported is the number of cars per lane.

Traffix 7.9.0215 (c) 2008 Dowling Assoc. Licensed to MMA, LONG BEACH, CA

Overlook Parkway Extension
Existing
AM Peak Hour

Level Of Service Computation Report
2000 HCM 4-Way Stop Method (Future Volume Alternative)

Intersection #16 Crystal View Ter/Overlook Pkwy

Cycle (sec):	100	Critical Vol./Cap.(X):	0.007
Loss Time (sec):	0 (Y+R=4.0 sec)	Average Delay (sec/veh):	6.9
Optimal Cycle:	0	Level Of Service:	A

Street Name:	Crystal View Ter								Overlook Pkwy								
Approach:	North Bound				South Bound				East Bound				West Bound				
Movement:	L	-	T	-	R	L	-	T	-	R	L	-	T	-	R	L	-	T	-	R	L	-	T	-	R
Control:	Stop Sign					Stop Sign					Stop Sign					Stop Sign				
Rights:	Include					Include					Include					Include				
Min. Green:	7	7	7			7	7	7			7	7	7			7	7	7		
Lanes:	1	0	0	0	0	0	0	0	0	1	1	0	0	1	0	1	0	0	1	0
Volume Module:																				
Base Vol:	6		0		0	0		0		1	2		0		6	0		1		0
Growth Adj:	1.00	1.00		1.00		1.00	1.00		1.00		1.00	1.00		1.00		1.00	1.00		1.00	
Initial Bse:	6		0		0	0		0		1	2		0		6	0		1		0
Added Vol:	0		0		0	0		0		0	0		0		0	0		0		0
PasserByVol:	0		0		0	0		0		0	0		0		0	0		0		0
Initial Fut:	6		0		0	0		0		1	2		0		6	0		1		0
User Adj:	1.00	1.00		1.00		1.00	1.00		1.00		1.00	1.00		1.00		1.00	1.00		1.00	
PHF Adj:	1.00	1.00		1.00		1.00	1.00		1.00		1.00	1.00		1.00		1.00	1.00		1.00	
PHF Volume:	6		0		0	0		0		1	2		0		6	0		1		0
Reduct Vol:	0		0		0	0		0		0	0		0		0	0		0		0
Reduced Vol:	6		0		0	0		0		1	2		0		6	0		1		0
PCE Adj:	1.00	1.00		1.00		1.00	1.00		1.00		1.00	1.00		1.00		1.00	1.00		1.00	
MLF Adj:	1.00	1.00		1.00		1.00	1.00		1.00		1.00	1.00		1.00		1.00	1.00		1.00	
FinalVolume:	6		0		0	0		0		1	2		0		6	0		1		0
Saturation Flow Module:																				
Adjustment:	1.00	1.00		1.00		1.00	1.00		1.00		1.00	1.00		1.00		1.00	1.00		1.00	
Lanes:	1.00	0.00		0.00		0.00	0.00		1.00		1.00	0.00		1.00		1.00	1.00		0.00	
Final Sat.:	872		0		0	0		0		1081	716		0		942	716		795		0
Capacity Analysis Module:																				
Vol/Sat:	0.01	xxxx		xxxx		xxxx	xxxx		0.00		0.00	xxxx		0.01		0.00	0.00		xxxx	
Crit Moves:	****								****					****			****			
Delay/Veh:	7.1	0.0		0.0		0.0	0.0		6.3		7.7	0.0		6.5		0.0	7.2		0.0	
Delay Adj:	1.00	1.00		1.00		1.00	1.00		1.00		1.00	1.00		1.00		1.00	1.00		1.00	
AdjDel/Veh:	7.1	0.0		0.0		0.0	0.0		6.3		7.7	0.0		6.5		0.0	7.2		0.0	
LOS by Move:	A	*		*		*	*		A		A	*		A		*	A		*	
ApproachDel:	7.1					6.3					6.8					7.2				
Delay Adj:	1.00					1.00					1.00					1.00				
ApprAdjDel:	7.1					6.3					6.8					7.2				
LOS by Appr:	A					A					A					A				
AllWayAvgQ:	0.0	0.0		0.0		0.0	0.0		0.0		0.0	0.0		0.0		0.0	0.0		0.0	

Traffix 7.9.0215 (c) 2008 Dowling Assoc. Licensed to MMA, LONG BEACH, CA

Overlook Parkway Extension
Existing
AM Peak Hour

Note: Queue reported is the number of cars per lane.

Overlook Parkway Extension
Existing
AM Peak Hour

Level Of Service Computation Report
2000 HCM Unsignalized Method (Future Volume Alternative)

Intersection #17 Kingdom Dr/Overlook Pkwy

Average Delay (sec/veh): 2.8 Worst Case Level Of Service: A[8.7]

Street Name:	Kingdom Dr						Overlook Pkwy					
Approach:	North Bound			South Bound			East Bound			West Bound		
Movement:	L - T - R			L - T - R			L - T - R			L - T - R		
Control:	Stop Sign			Stop Sign			Uncontrolled			Uncontrolled		
Rights:	Include			Include			Include			Include		
Lanes:	0 0 1! 0 0			0 0 1! 0 0			1 0 0 1 0			1 0 0 1 0		
Volume Module:												
Base Vol:	19	0	2	0	0	0	1	12	21	1	14	0
Growth Adj:	1.00	1.00	1.00	1.00	1.00	1.00	1.00	1.00	1.00	1.00	1.00	1.00
Initial Bse:	19	0	2	0	0	0	1	12	21	1	14	0
Added Vol:	0	0	0	0	0	0	0	0	0	0	0	0
PasserByVol:	0	0	0	0	0	0	0	0	0	0	0	0
Initial Fut:	19	0	2	0	0	0	1	12	21	1	14	0
User Adj:	1.00	1.00	1.00	1.00	1.00	1.00	1.00	1.00	1.00	1.00	1.00	1.00
PHF Adj:	1.00	1.00	1.00	1.00	1.00	1.00	1.00	1.00	1.00	1.00	1.00	1.00
PHF Volume:	19	0	2	0	0	0	1	12	21	1	14	0
Reduct Vol:	0	0	0	0	0	0	0	0	0	0	0	0
FinalVolume:	19	0	2	0	0	0	1	12	21	1	14	0
Critical Gap Module:												
Critical Gp:	6.4	6.5	6.2	7.1	6.5	6.2	4.1	xxxx	xxxxx	4.1	xxxx	xxxxx
FollowUpTim:	3.5	4.0	3.3	3.5	4.0	3.3	2.2	xxxx	xxxxx	2.2	xxxx	xxxxx
Capacity Module:												
Cnflict Vol:	41	41	23	42	51	14	14	xxxx	xxxxx	33	xxxx	xxxxx
Potent Cap.:	976	855	1060	967	844	1072	1617	xxxx	xxxxx	1592	xxxx	xxxxx
Move Cap.:	975	854	1060	964	843	1072	1617	xxxx	xxxxx	1592	xxxx	xxxxx
Volume/Cap:	0.02	0.00	0.00	0.00	0.00	0.00	0.00	xxxx	xxxx	0.00	xxxx	xxxx
Level Of Service Module:												
2Way95thQ:	xxxx	xxxx	xxxxx	xxxx	xxxx	xxxxx	0.0	xxxx	xxxxx	0.0	xxxx	xxxxx
Control Del:	xxxxx	xxxx	xxxxx	xxxxx	xxxx	xxxxx	7.2	xxxx	xxxxx	7.3	xxxx	xxxxx
LOS by Move:	*	*	*	*	*	*	A	*	*	A	*	*
Movement:	LT -	LTR -	RT	LT -	LTR -	RT	LT -	LTR -	RT	LT -	LTR -	RT
Shared Cap.:	xxxx	983	xxxxx	xxxx	0	xxxxx	xxxx	xxxx	xxxxx	xxxx	xxxx	xxxxx
SharedQueue:	xxxxx	0.1	xxxxx	xxxxx	xxxx	xxxxx	xxxxx	xxxx	xxxxx	xxxxx	xxxx	xxxxx
Shrd ConDel:	xxxxx	8.7	xxxxx	xxxxx	xxxx	xxxxx	xxxxx	xxxx	xxxxx	xxxxx	xxxx	xxxxx
Shared LOS:	*	A	*	*	*	*	*	*	*	*	*	*
ApproachDel:	8.7			xxxxxx			xxxxxx			xxxxxx		
ApproachLOS:	A			*			*			*		

Note: Queue reported is the number of cars per lane.

Overlook Parkway Extension
Existing
AM Peak Hour

Level Of Service Computation Report
2000 HCM Unsignalized Method (Future Volume Alternative)

Intersection #18 Kingdom Dr/Green Orchard Pl

Average Delay (sec/veh): 4.1 Worst Case Level Of Service: A[8.4]

Street Name:	Kingdom Dr												Green Orchard Pl											
Approach:	North Bound						South Bound						East Bound						West Bound					
Movement:	L	-	T	-	R	L	-	T	-	R	L	-	T	-	R	L	-	T	-	R				
Control:	Uncontrolled					Uncontrolled					Stop Sign					Stop Sign								
Rights:	Include					Include					Include					Include								
Lanes:	0	0	0	1	0	0	1	0	0	0	0	0	0	0	0	0	0	0	0	1				
Volume Module:																								
Base Vol:	0	14	2	6	9	0	0	0	0	0	0	0	0	0	0	0	0	19						
Growth Adj:	1.00	1.00	1.00	1.00	1.00	1.00	1.00	1.00	1.00	1.00	1.00	1.00												
Initial Bse:	0	14	2	6	9	0	0	0	0	0	0	0	0	0	0	0	0	19						
Added Vol:	0	0	0	0	0	0	0	0	0	0	0	0	0	0	0	0	0	0						
PasserByVol:	0	0	0	0	0	0	0	0	0	0	0	0	0	0	0	0	0	0						
Initial Fut:	0	14	2	6	9	0	0	0	0	0	0	0	0	0	0	0	0	19						
User Adj:	1.00	1.00	1.00	1.00	1.00	1.00	1.00	1.00	1.00	1.00	1.00	1.00												
PHF Adj:	1.00	1.00	1.00	1.00	1.00	1.00	1.00	1.00	1.00	1.00	1.00	1.00												
PHF Volume:	0	14	2	6	9	0	0	0	0	0	0	0	0	0	0	0	0	19						
Reduct Vol:	0	0	0	0	0	0	0	0	0	0	0	0	0	0	0	0	0	0						
FinalVolume:	0	14	2	6	9	0	0	0	0	0	0	0	0	0	0	0	0	19						
Critical Gap Module:																								
Critical Gp:	xxxxx	xxxx	xxxxx	4.1	xxxx	xxxxx	xxxxx	xxxx	xxxxx	xxxxx	xxxx	6.2												
FollowUpTim:	xxxxx	xxxx	xxxxx	2.2	xxxx	xxxxx	xxxxx	xxxx	xxxxx	xxxxx	xxxx	3.3												
Capacity Module:																								
Cnflict Vol:	xxxx	xxxx	xxxxx	16	xxxx	xxxxx	xxxx	xxxx	xxxxx	xxxx	xxxx	15												
Potent Cap.:	xxxx	xxxx	xxxxx	1615	xxxx	xxxxx	xxxx	xxxx	xxxxx	xxxx	xxxx	1070												
Move Cap.:	xxxx	xxxx	xxxxx	1615	xxxx	xxxxx	xxxx	xxxx	xxxxx	xxxx	xxxx	1070												
Volume/Cap:	xxxx	xxxx	xxxx	0.00	xxxx	xxxx	xxxx	xxxx	xxxx	xxxx	xxxx	0.02												
Level Of Service Module:																								
2Way95thQ:	xxxx	xxxx	xxxxx	0.0	xxxx	xxxxx	xxxx	xxxx	xxxxx	xxxx	xxxx	0.1												
Control Del:	xxxxx	xxxx	xxxxx	7.2	xxxx	xxxxx	xxxxx	xxxx	xxxxx	xxxxx	xxxx	8.4												
LOS by Move:	*	*	*	A	*	*	*	*	*	*	*	A												
Movement:	LT - LTR - RT																							
Shared Cap.:	xxxx	xxxx	xxxxx	xxxx	xxxx	xxxxx	xxxx	xxxx	xxxxx	xxxx	xxxx	xxxxx												
SharedQueue:	xxxxx	xxxx	xxxxx	0.0	xxxx	xxxxx	xxxxx	xxxx	xxxxx	xxxxx	xxxx	xxxxx												
Shrd ConDel:	xxxxx	xxxx	xxxxx	7.2	xxxx	xxxxx	xxxxx	xxxx	xxxxx	xxxxx	xxxx	xxxxx												
Shared LOS:	*	*	*	A	*	*	*	*	*	*	*	*												
ApproachDel:	xxxxxx			xxxxxx			xxxxxx			8.4														
ApproachLOS:	*			*			*			A														

Note: Queue reported is the number of cars per lane.

Traffix 7.9.0215 (c) 2008 Dowling Assoc. Licensed to MMA, LONG BEACH, CA

Overlook Parkway Extension
Existing
AM Peak Hour

Level Of Service Computation Report
2000 HCM Operations Method (Future Volume Alternative)

Intersection #19 Trautwein Rd/John F. Kennedy Dr

Cycle (sec): 100 Critical Vol./Cap.(X): 0.827
Loss Time (sec): 16 (Y+R=4.0 sec) Average Delay (sec/veh): 30.6
Optimal Cycle: 93 Level Of Service: C

Street Name:	Trautwein Rd									John F. Kennedy Dr								
Approach:	North Bound					South Bound				East Bound					West Bound			
Movement:	L	-	T	-	R	L	-	T	-	R	L	-	T	-	R	L	-	T	-	R
Control:	Protected					Protected				Protected					Protected			
Rights:	Include					Ovl				Include					Include			
Min. Green:	7	7	7	7	7	7	7	7	7	7	7	7						
Lanes:	1	0	2	0	1	1	0	2	0	1	2	0	1	0	1	1	0	0	1	0
Volume Module:																				
Base Vol:	44	1740	69	7	615	498	517	42	37	108	55	53								
Growth Adj:	1.00	1.00	1.00	1.00	1.00	1.00	1.00	1.00	1.00	1.00	1.00	1.00								
Initial Bse:	44	1740	69	7	615	498	517	42	37	108	55	53								
Added Vol:	0	0	0	0	0	0	0	0	0	0	0	0								
PasserByVol:	0	0	0	0	0	0	0	0	0	0	0	0								
Initial Fut:	44	1740	69	7	615	498	517	42	37	108	55	53								
User Adj:	1.00	1.00	1.00	1.00	1.00	1.00	1.00	1.00	1.00	1.00	1.00	1.00								
PHF Adj:	1.00	1.00	1.00	1.00	1.00	1.00	1.00	1.00	1.00	1.00	1.00	1.00								
PHF Volume:	44	1740	69	7	615	498	517	42	37	108	55	53								
Reduct Vol:	0	0	0	0	0	0	0	0	0	0	0	0								
Reduced Vol:	44	1740	69	7	615	498	517	42	37	108	55	53								
PCE Adj:	1.00	1.00	1.00	1.00	1.00	1.00	1.00	1.00	1.00	1.00	1.00	1.00								
MLF Adj:	1.00	1.00	1.00	1.00	1.00	1.00	1.00	1.00	1.00	1.00	1.00	1.00								
FinalVolume:	44	1740	69	7	615	498	517	42	37	108	55	53								
Saturation Flow Module:																				
Sat/Lane:	1900	1900	1900	1900	1900	1900	1900	1900	1900	1900	1900	1900								
Adjustment:	0.95	0.95	0.85	0.95	0.95	0.85	0.92	1.00	0.85	0.95	0.93	0.93								
Lanes:	1.00	2.00	1.00	1.00	2.00	1.00	2.00	1.00	1.00	1.00	0.51	0.49								
Final Sat.:	1805	3610	1615	1805	3610	1615	3502	1900	1615	1805	896	863								
Capacity Analysis Module:																				
Vol/Sat:	0.02	0.48	0.04	0.00	0.17	0.31	0.15	0.02	0.02	0.06	0.06	0.06								
Crit Moves:	****			****			****				****									
Green/Cycle:	0.18	0.54	0.54	0.07	0.43	0.59	0.16	0.12	0.12	0.12	0.07	0.07								
Volume/Cap:	0.14	0.90	0.08	0.06	0.40	0.52	0.90	0.19	0.20	0.51	0.88	0.88								
Delay/Veh:	35.0	26.9	11.3	43.6	19.8	12.5	58.1	40.3	40.4	43.6	91.9	91.9								
User DelAdj:	1.00	1.00	1.00	1.00	1.00	1.00	1.00	1.00	1.00	1.00	1.00	1.00								
AdjDel/Veh:	35.0	26.9	11.3	43.6	19.8	12.5	58.1	40.3	40.4	43.6	91.9	91.9								
LOS by Move:	C	C	B	D	B	B	E	D	D	D	F	F								
HCM2kAvgQ:	1	29	1	0	7	9	11	1	1	4	6	6								

Note: Queue reported is the number of cars per lane.

Traffix 7.9.0215 (c) 2008 Dowling Assoc. Licensed to MMA, LONG BEACH, CA

Overlook Parkway Extension
Existing
AM Peak Hour

Level Of Service Computation Report
2000 HCM Operations Method (Future Volume Alternative)

Intersection #20 Washington St/Bradley St

Cycle (sec): 100 Critical Vol./Cap.(X): 0.648
Loss Time (sec): 12 (Y+R=4.0 sec) Average Delay (sec/veh): 21.1
Optimal Cycle: 53 Level Of Service: C

Street Name:	Washington St						Bradley St					
Approach:	North Bound			South Bound			East Bound			West Bound		
Movement:	L -	T -	R	L -	T -	R	L -	T -	R	L -	T -	R
Control:	Protected			Protected			Permitted			Permitted		
Rights:	Include			Include			Include			Include		
Min. Green:	7	7	7	7	7	7	7	7	7	7	7	7
Lanes:	1 0	1 0	1	1 0	0 1	0	0 0	1! 0	0	0 0	1! 0	0
Volume Module:												
Base Vol:	259	865	12	32	269	3	3	9	80	23	41	98
Growth Adj:	1.00	1.00	1.00	1.00	1.00	1.00	1.00	1.00	1.00	1.00	1.00	1.00
Initial Bse:	259	865	12	32	269	3	3	9	80	23	41	98
Added Vol:	0	0	0	0	0	0	0	0	0	0	0	0
PasserByVol:	0	0	0	0	0	0	0	0	0	0	0	0
Initial Fut:	259	865	12	32	269	3	3	9	80	23	41	98
User Adj:	1.00	1.00	1.00	1.00	1.00	1.00	1.00	1.00	1.00	1.00	1.00	1.00
PHF Adj:	1.00	1.00	1.00	1.00	1.00	1.00	1.00	1.00	1.00	1.00	1.00	1.00
PHF Volume:	259	865	12	32	269	3	3	9	80	23	41	98
Reduct Vol:	0	0	0	0	0	0	0	0	0	0	0	0
Reduced Vol:	259	865	12	32	269	3	3	9	80	23	41	98
PCE Adj:	1.00	1.00	1.00	1.00	1.00	1.00	1.00	1.00	1.00	1.00	1.00	1.00
MLF Adj:	1.00	1.00	1.00	1.00	1.00	1.00	1.00	1.00	1.00	1.00	1.00	1.00
FinalVolume:	259	865	12	32	269	3	3	9	80	23	41	98
Saturation Flow Module:												
Sat/Lane:	1900	1900	1900	1900	1900	1900	1900	1900	1900	1900	1900	1900
Adjustment:	0.95	1.00	0.85	0.95	1.00	1.00	0.88	0.88	0.88	0.87	0.87	0.87
Lanes:	1.00	1.00	1.00	1.00	0.99	0.01	0.03	0.10	0.87	0.14	0.25	0.61
Final Sat.:	1805	1900	1615	1805	1875	21	54	163	1449	236	420	1004
Capacity Analysis Module:												
Vol/Sat:	0.14	0.46	0.01	0.02	0.14	0.14	0.06	0.06	0.06	0.10	0.10	0.10
Crit Moves:		****		****							****	
Green/Cycle:	0.37	0.67	0.67	0.07	0.37	0.37	0.14	0.14	0.14	0.14	0.14	0.14
Volume/Cap:	0.39	0.68	0.01	0.25	0.39	0.39	0.39	0.39	0.39	0.68	0.68	0.68
Delay/Veh:	23.7	11.7	5.6	45.1	23.6	23.6	39.9	39.9	39.9	48.6	48.6	48.6
User DelAdj:	1.00	1.00	1.00	1.00	1.00	1.00	1.00	1.00	1.00	1.00	1.00	1.00
AdjDel/Veh:	23.7	11.7	5.6	45.1	23.6	23.6	39.9	39.9	39.9	48.6	48.6	48.6
LOS by Move:	C	B	A	D	C	C	D	D	D	D	D	D
HCM2kAvgQ:	6	17	0	1	6	6	3	3	3	6	6	6

Note: Queue reported is the number of cars per lane.

Traffix 7.9.0215 (c) 2008 Dowling Assoc. Licensed to MMA, LONG BEACH, CA

Overlook Parkway Extension
Existing
AM Peak Hour

Level Of Service Computation Report
2000 HCM Operations Method (Future Volume Alternative)

Intersection #21 Alessandro Blvd/Via Vista Dr

Cycle (sec): 100 Critical Vol./Cap.(X): 0.795
Loss Time (sec): 16 (Y+R=4.0 sec) Average Delay (sec/veh): 23.8
Optimal Cycle: 85 Level Of Service: C

Street Name:	Alessandro Blvd						Via Vista Dr					
Approach:	North Bound			South Bound			East Bound			West Bound		
Movement:	L -	T -	R	L -	T -	R	L -	T -	R	L -	T -	R
Control:	Protected			Protected			Protected			Protected		
Rights:	Include			Include			Include			Include		
Min. Green:	7	7	7	7	7	7	7	7	7	7	7	7
Lanes:	1 0	2 1	0	1 0	2 1	0	1 0	1 0	1	1 0	1 0	1
Volume Module:												
Base Vol:	69	2569	13	26	927	57	168	43	43	18	42	100
Growth Adj:	1.00	1.00	1.00	1.00	1.00	1.00	1.00	1.00	1.00	1.00	1.00	1.00
Initial Bse:	69	2569	13	26	927	57	168	43	43	18	42	100
Added Vol:	0	0	0	0	0	0	0	0	0	0	0	0
PasserByVol:	0	0	0	0	0	0	0	0	0	0	0	0
Initial Fut:	69	2569	13	26	927	57	168	43	43	18	42	100
User Adj:	1.00	1.00	1.00	1.00	1.00	1.00	1.00	1.00	1.00	1.00	1.00	1.00
PHF Adj:	1.00	1.00	1.00	1.00	1.00	1.00	1.00	1.00	1.00	1.00	1.00	1.00
PHF Volume:	69	2569	13	26	927	57	168	43	43	18	42	100
Reduct Vol:	0	0	0	0	0	0	0	0	0	0	0	0
Reduced Vol:	69	2569	13	26	927	57	168	43	43	18	42	100
PCE Adj:	1.00	1.00	1.00	1.00	1.00	1.00	1.00	1.00	1.00	1.00	1.00	1.00
MLF Adj:	1.00	1.00	1.00	1.00	1.00	1.00	1.00	1.00	1.00	1.00	1.00	1.00
FinalVolume:	69	2569	13	26	927	57	168	43	43	18	42	100
Saturation Flow Module:												
Sat/Lane:	1900	1900	1900	1900	1900	1900	1900	1900	1900	1900	1900	1900
Adjustment:	0.95	0.91	0.91	0.95	0.90	0.90	0.95	1.00	0.85	0.95	1.00	0.85
Lanes:	1.00	2.98	0.02	1.00	2.83	0.17	1.00	1.00	1.00	1.00	1.00	1.00
Final Sat.:	1805	5156	26	1805	4843	298	1805	1900	1615	1805	1900	1615
Capacity Analysis Module:												
Vol/Sat:	0.04	0.50	0.50	0.01	0.19	0.19	0.09	0.02	0.03	0.01	0.02	0.06
Crit Moves:		****		****			****					****
Green/Cycle:	0.18	0.59	0.59	0.07	0.48	0.48	0.11	0.09	0.09	0.09	0.07	0.07
Volume/Cap:	0.22	0.85	0.85	0.21	0.40	0.40	0.85	0.25	0.29	0.11	0.30	0.85
Delay/Veh:	35.6	19.4	19.4	44.7	16.7	16.7	71.2	43.0	43.5	42.0	45.2	86.4
User DelAdj:	1.00	1.00	1.00	1.00	1.00	1.00	1.00	1.00	1.00	1.00	1.00	1.00
AdjDel/Veh:	35.6	19.4	19.4	44.7	16.7	16.7	71.2	43.0	43.5	42.0	45.2	86.4
LOS by Move:	D	B	B	D	B	B	E	D	D	D	D	F
HCM2kAvgQ:	2	26	26	1	7	7	8	1	2	1	2	5

Note: Queue reported is the number of cars per lane.

Traffix 7.9.0215 (c) 2008 Dowling Assoc. Licensed to MMA, LONG BEACH, CA

Overlook Parkway Extension
Existing
AM Peak Hour

Level Of Service Computation Report
2000 HCM 4-Way Stop Method (Future Volume Alternative)

Intersection #23 Mary St/Hawarden Dr

Cycle (sec):	100	Critical Vol./Cap.(X):	0.183
Loss Time (sec):	0 (Y+R=4.0 sec)	Average Delay (sec/veh):	8.0
Optimal Cycle:	0	Level Of Service:	A

Street Name:	Mary St							Hawarden Dr					
Approach:	North Bound			South Bound			East Bound			West Bound			
Movement:	L	- T	- R	L	- T	- R	L	- T	- R	L	- T	- R	
Control:	Stop Sign			Stop Sign			Stop Sign			Stop Sign			
Rights:	Include			Include			Include			Include			
Min. Green:	7	7	7	7	7	7	7	7	7	7	7	7	
Lanes:	0 1	0	0 0	0	0	0 1	0	0	0 1!	0	0	0 0	0
Volume Module:													
Base Vol:	2	150	0	0	51	39	102	0	4	0	0	0	
Growth Adj:	1.00	1.00	1.00	1.00	1.00	1.00	1.00	1.00	1.00	1.00	1.00	1.00	
Initial Bse:	2	150	0	0	51	39	102	0	4	0	0	0	
Added Vol:	0	0	0	0	0	0	0	0	0	0	0	0	
PasserByVol:	0	0	0	0	0	0	0	0	0	0	0	0	
Initial Fut:	2	150	0	0	51	39	102	0	4	0	0	0	
User Adj:	1.00	1.00	1.00	1.00	1.00	1.00	1.00	1.00	1.00	1.00	1.00	1.00	
PHF Adj:	1.00	1.00	1.00	1.00	1.00	1.00	1.00	1.00	1.00	1.00	1.00	1.00	
PHF Volume:	2	150	0	0	51	39	102	0	4	0	0	0	
Reduct Vol:	0	0	0	0	0	0	0	0	0	0	0	0	
Reduced Vol:	2	150	0	0	51	39	102	0	4	0	0	0	
PCE Adj:	1.00	1.00	1.00	1.00	1.00	1.00	1.00	1.00	1.00	1.00	1.00	1.00	
MLF Adj:	1.00	1.00	1.00	1.00	1.00	1.00	1.00	1.00	1.00	1.00	1.00	1.00	
FinalVolume:	2	150	0	0	51	39	102	0	4	0	0	0	
Saturation Flow Module:													
Adjustment:	1.00	1.00	1.00	1.00	1.00	1.00	1.00	1.00	1.00	1.00	1.00	1.00	
Lanes:	0.01	0.99	0.00	0.00	0.57	0.43	0.96	0.00	0.04	0.00	0.00	0.00	
Final Sat.:	11	820	0	0	491	376	729	0	29	0	0	0	
Capacity Analysis Module:													
Vol/Sat:	0.18	0.18	xxxx	xxxx	0.10	0.10	0.14	xxxx	0.14	xxxx	xxxx	xxxx	
Crit Moves:		****				****	****						
Delay/Veh:	8.2	8.2	0.0	0.0	7.5	7.5	8.3	0.0	8.3	0.0	0.0	0.0	
Delay Adj:	1.00	1.00	1.00	1.00	1.00	1.00	1.00	1.00	1.00	1.00	1.00	1.00	
AdjDel/Veh:	8.2	8.2	0.0	0.0	7.5	7.5	8.3	0.0	8.3	0.0	0.0	0.0	
LOS by Move:	A	A	*	*	A	A	A	*	A	*	*	*	
ApproachDel:	8.2				7.5		8.3			xxxxxx			
Delay Adj:	1.00				1.00		1.00			xxxxx			
ApprAdjDel:	8.2				7.5		8.3			xxxxxx			
LOS by Appr:	A				A		A			*			
AllWayAvgQ:	0.2	0.2	0.2	0.1	0.1	0.1	0.1	0.1	0.1	0.0	0.0	0.0	

Overlook Parkway Extension
Existing
AM Peak Hour

Note: Queue reported is the number of cars per lane.

Overlook Parkway Extension
Existing
AM Peak Hour

Level Of Service Computation Report
2000 HCM 4-Way Stop Method (Future Volume Alternative)

Intersection #24 Hawarden Dr/Overlook Pkwy

Cycle (sec): 100 Critical Vol./Cap.(X): 0.143
Loss Time (sec): 0 (Y+R=4.0 sec) Average Delay (sec/veh): 7.9
Optimal Cycle: 0 Level Of Service: A

Street Name:	Hawarden Dr						Overlook Pkwy					
Approach:	North Bound			South Bound			East Bound			West Bound		
Movement:	L -	T -	R	L -	T -	R	L -	T -	R	L -	T -	R
Control:	Stop Sign			Stop Sign			Stop Sign			Stop Sign		
Rights:	Include			Include			Include			Include		
Min. Green:	7	7	7	7	7	7	7	7	7	7	7	7
Lanes:	0 0	1! 0	0	0 0	1! 0	0	1 0	1 1	0	1 0	1 1	0
Volume Module:												
Base Vol:	44	64	4	6	23	10	10	47	21	0	93	17
Growth Adj:	1.00	1.00	1.00	1.00	1.00	1.00	1.00	1.00	1.00	1.00	1.00	1.00
Initial Bse:	44	64	4	6	23	10	10	47	21	0	93	17
Added Vol:	0	0	0	0	0	0	0	0	0	0	0	0
PasserByVol:	0	0	0	0	0	0	0	0	0	0	0	0
Initial Fut:	44	64	4	6	23	10	10	47	21	0	93	17
User Adj:	1.00	1.00	1.00	1.00	1.00	1.00	1.00	1.00	1.00	1.00	1.00	1.00
PHF Adj:	1.00	1.00	1.00	1.00	1.00	1.00	1.00	1.00	1.00	1.00	1.00	1.00
PHF Volume:	44	64	4	6	23	10	10	47	21	0	93	17
Reduct Vol:	0	0	0	0	0	0	0	0	0	0	0	0
Reduced Vol:	44	64	4	6	23	10	10	47	21	0	93	17
PCE Adj:	1.00	1.00	1.00	1.00	1.00	1.00	1.00	1.00	1.00	1.00	1.00	1.00
MLF Adj:	1.00	1.00	1.00	1.00	1.00	1.00	1.00	1.00	1.00	1.00	1.00	1.00
FinalVolume:	44	64	4	6	23	10	10	47	21	0	93	17
Saturation Flow Module:												
Adjustment:	1.00	1.00	1.00	1.00	1.00	1.00	1.00	1.00	1.00	1.00	1.00	1.00
Lanes:	0.39	0.57	0.04	0.15	0.59	0.26	1.00	1.38	0.62	1.00	1.69	0.31
Final Sat.:	308	448	28	123	470	204	645	1007	479	651	1231	231
Capacity Analysis Module:												
Vol/Sat:	0.14	0.14	0.14	0.05	0.05	0.05	0.02	0.05	0.04	0.00	0.08	0.07
Crit Moves:		****				****		****			****	
Delay/Veh:	8.1	8.1	8.1	7.5	7.5	7.5	8.2	7.7	7.4	0.0	7.9	7.7
Delay Adj:	1.00	1.00	1.00	1.00	1.00	1.00	1.00	1.00	1.00	1.00	1.00	1.00
AdjDel/Veh:	8.1	8.1	8.1	7.5	7.5	7.5	8.2	7.7	7.4	0.0	7.9	7.7
LOS by Move:	A	A	A	A	A	A	A	A	A	*	A	A
ApproachDel:	8.1			7.5			7.7			7.9		
Delay Adj:	1.00			1.00			1.00			1.00		
ApprAdjDel:	8.1			7.5			7.7			7.9		
LOS by Appr:	A			A			A			A		
AllWayAvgQ:	0.2	0.2	0.2	0.0	0.0	0.0	0.0	0.0	0.0	0.0	0.1	0.1

Traffix 7.9.0215 (c) 2008 Dowling Assoc. Licensed to MMA, LONG BEACH, CA

Overlook Parkway Extension
Existing
AM Peak Hour

Note: Queue reported is the number of cars per lane.

Traffix 7.9.0215 (c) 2008 Dowling Assoc. Licensed to MMA, LONG BEACH, CA

Overlook Parkway Extension
Existing
AM Peak Hour

Level Of Service Computation Report
2000 HCM 4-Way Stop Method (Future Volume Alternative)

Intersection #25 Crystal View Ter/Berry Rd

Cycle (sec): 100 Critical Vol./Cap.(X): 0.105
Loss Time (sec): 0 (Y+R=4.0 sec) Average Delay (sec/veh): 7.0
Optimal Cycle: 0 Level Of Service: A

Street Name:	Crystal View Ter					Berry Rd					
Approach:	North Bound			South Bound			East Bound			West Bound		
Movement:	L -	T -	R	L -	T -	R	L -	T -	R	L -	T -	R
Control:	Stop Sign			Stop Sign			Stop Sign			Stop Sign		
Rights:	Include			Include			Include			Include		
Min. Green:	7	7	7	7	7	7	7	7	7	7	7	7
Lanes:	0 0	1! 0	0	0 0	1! 0	0	0 0	0 1	0	0 0	1! 0	0
Volume Module:												
Base Vol:	1	3	105	4	2	3	0	1	3	31	1	4
Growth Adj:	1.00	1.00	1.00	1.00	1.00	1.00	1.00	1.00	1.00	1.00	1.00	1.00
Initial Bse:	1	3	105	4	2	3	0	1	3	31	1	4
Added Vol:	0	0	0	0	0	0	0	0	0	0	0	0
PasserByVol:	0	0	0	0	0	0	0	0	0	0	0	0
Initial Fut:	1	3	105	4	2	3	0	1	3	31	1	4
User Adj:	1.00	1.00	1.00	1.00	1.00	1.00	1.00	1.00	1.00	1.00	1.00	1.00
PHF Adj:	1.00	1.00	1.00	1.00	1.00	1.00	1.00	1.00	1.00	1.00	1.00	1.00
PHF Volume:	1	3	105	4	2	3	0	1	3	31	1	4
Reduct Vol:	0	0	0	0	0	0	0	0	0	0	0	0
Reduced Vol:	1	3	105	4	2	3	0	1	3	31	1	4
PCE Adj:	1.00	1.00	1.00	1.00	1.00	1.00	1.00	1.00	1.00	1.00	1.00	1.00
MLF Adj:	1.00	1.00	1.00	1.00	1.00	1.00	1.00	1.00	1.00	1.00	1.00	1.00
FinalVolume:	1	3	105	4	2	3	0	1	3	31	1	4
Saturation Flow Module:												
Adjustment:	1.00	1.00	1.00	1.00	1.00	1.00	1.00	1.00	1.00	1.00	1.00	1.00
Lanes:	0.01	0.03	0.96	0.45	0.22	0.33	0.00	0.25	0.75	0.86	0.03	0.11
Final Sat.:	10	29	1004	399	199	299	0	236	708	717	23	93
Capacity Analysis Module:												
Vol/Sat:	0.10	0.10	0.10	0.01	0.01	0.01	xxxx	0.00	0.00	0.04	0.04	0.04
Crit Moves:	****					****		****			****	
Delay/Veh:	6.8	6.8	6.8	7.0	7.0	7.0	0.0	6.7	6.7	7.4	7.4	7.4
Delay Adj:	1.00	1.00	1.00	1.00	1.00	1.00	1.00	1.00	1.00	1.00	1.00	1.00
AdjDel/Veh:	6.8	6.8	6.8	7.0	7.0	7.0	0.0	6.7	6.7	7.4	7.4	7.4
LOS by Move:	A	A	A	A	A	A	*	A	A	A	A	A
ApproachDel:	6.8			7.0			6.7			7.4		
Delay Adj:	1.00			1.00			1.00			1.00		
ApprAdjDel:	6.8			7.0			6.7			7.4		
LOS by Appr:	A			A			A			A		
AllWayAvgQ:	0.1	0.1	0.1	0.0	0.0	0.0	0.0	0.0	0.0	0.0	0.0	0.0

Traffix 7.9.0215 (c) 2008 Dowling Assoc. Licensed to MMA, LONG BEACH, CA

Overlook Parkway Extension
Existing
AM Peak Hour

Note: Queue reported is the number of cars per lane.

Traffix 7.9.0215 (c) 2008 Dowling Assoc. Licensed to MMA, LONG BEACH, CA

Overlook Parkway Extension
Existing
AM Peak Hour

Level Of Service Computation Report
2000 HCM 4-Way Stop Method (Future Volume Alternative)

Intersection #26 Corinthian Wy/Berry Rd

Cycle (sec): 100 Critical Vol./Cap.(X): 0.133
Loss Time (sec): 0 (Y+R=4.0 sec) Average Delay (sec/veh): 7.4
Optimal Cycle: 0 Level Of Service: A

Street Name:	Corinthian Wy						Berry Rd					
Approach:	North Bound			South Bound			East Bound			West Bound		
Movement:	L	T	R	L	T	R	L	T	R	L	T	R
Control:	Stop Sign			Stop Sign			Stop Sign			Stop Sign		
Rights:	Include			Include			Include			Include		
Min. Green:	7	7	7	7	7	7	7	7	7	7	7	7
Lanes:	0 0	0 0	0	0 0	1! 0	0	0 1	0 0	0	0 0	0 1	0
Volume Module:												
Base Vol:	0	0	0	4	0	20	97	17	0	0	17	38
Growth Adj:	1.00	1.00	1.00	1.00	1.00	1.00	1.00	1.00	1.00	1.00	1.00	1.00
Initial Bse:	0	0	0	4	0	20	97	17	0	0	17	38
Added Vol:	0	0	0	0	0	0	0	0	0	0	0	0
PasserByVol:	0	0	0	0	0	0	0	0	0	0	0	0
Initial Fut:	0	0	0	4	0	20	97	17	0	0	17	38
User Adj:	1.00	1.00	1.00	1.00	1.00	1.00	1.00	1.00	1.00	1.00	1.00	1.00
PHF Adj:	1.00	1.00	1.00	1.00	1.00	1.00	1.00	1.00	1.00	1.00	1.00	1.00
PHF Volume:	0	0	0	4	0	20	97	17	0	0	17	38
Reduct Vol:	0	0	0	0	0	0	0	0	0	0	0	0
Reduced Vol:	0	0	0	4	0	20	97	17	0	0	17	38
PCE Adj:	1.00	1.00	1.00	1.00	1.00	1.00	1.00	1.00	1.00	1.00	1.00	1.00
MLF Adj:	1.00	1.00	1.00	1.00	1.00	1.00	1.00	1.00	1.00	1.00	1.00	1.00
FinalVolume:	0	0	0	4	0	20	97	17	0	0	17	38
Saturation Flow Module:												
Adjustment:	1.00	1.00	1.00	1.00	1.00	1.00	1.00	1.00	1.00	1.00	1.00	1.00
Lanes:	0.00	0.00	0.00	0.17	0.00	0.83	0.85	0.15	0.00	0.00	0.31	0.69
Final Sat.:	0	0	0	153	0	766	731	128	0	0	303	676
Capacity Analysis Module:												
Vol/Sat:	xxxx	xxxx	xxxx	0.03	xxxx	0.03	0.13	0.13	xxxx	xxxx	0.06	0.06
Crit Moves:				****				****				****
Delay/Veh:	0.0	0.0	0.0	6.9	0.0	6.9	7.8	7.8	0.0	0.0	6.9	6.9
Delay Adj:	1.00	1.00	1.00	1.00	1.00	1.00	1.00	1.00	1.00	1.00	1.00	1.00
AdjDel/Veh:	0.0	0.0	0.0	6.9	0.0	6.9	7.8	7.8	0.0	0.0	6.9	6.9
LOS by Move:	*	*	*	A	*	A	A	A	*	*	A	A
ApproachDel:	xxxxxx			6.9			7.8			6.9		
Delay Adj:	xxxxx			1.00			1.00			1.00		
ApprAdjDel:	xxxxxx			6.9			7.8			6.9		
LOS by Appr:	*			A			A			A		
AllWayAvgQ:	0.0	0.0	0.0	0.0	0.0	0.0	0.2	0.2	0.2	0.1	0.1	0.1

Overlook Parkway Extension
Existing
AM Peak Hour

Note: Queue reported is the number of cars per lane.

HCM Unsignalized Intersection Capacity Analysis
27: Madison St & Dufferin Ave

6/21/2011

Movement	EBL	EBR	SBL	SBR	NEL2	NEL	NET	SWT	SWR	SWR2
Lane Configurations										
Sign Control	Stop		Stop				Stop	Stop		
Volume (vph)	21	11	0	0	12	0	8	14	22	1
Peak Hour Factor	1.00	1.00	1.00	1.00	1.00	1.00	1.00	1.00	1.00	1.00
Hourly flow rate (vph)	21	11	0	0	12	0	8	14	22	1

Direction, Lane #	EB 1	SB 1	NE 1	SW 1
Volume Total (vph)	32	0	20	37
Volume Left (vph)	0	0	12	14
Volume Right (vph)	11	0	8	1
Hadj (s)	-0.19	0.00	-0.10	0.08
Departure Headway (s)	3.8	4.1	3.9	4.0
Degree Utilization, x	0.03	0.00	0.02	0.04
Capacity (veh/h)	937	878	886	879
Control Delay (s)	6.9	7.1	7.0	7.2
Approach Delay (s)	6.9	0.0	7.0	7.2
Approach LOS	A	A	A	A

Intersection Summary				
Delay		7.1		
HCM Level of Service		A		
Intersection Capacity Utilization	17.8%		ICU Level of Service	A
Analysis Period (min)		15		


```
Existing AM                Tue Jun 21, 2011 14:40:31                Page 27-1
-------------------------------------------------------------------------------
                           Overlook Parkway Extension
                                   Existing
                                AM Peak Hour
-------------------------------------------------------------------------------
                        Level Of Service Computation Report
            2000 HCM Unsignalized Method (Future Volume Alternative)
*******************************************************************************
Intersection #28 Orozco Dr/Overlook Pkwy
*******************************************************************************
Average Delay (sec/veh):      1.8       Worst Case Level Of Service: A[  9.8]
*******************************************************************************
Street Name:             Orozco Dr                        Overlook Pkwy
Approach:      North Bound      South Bound       East Bound       West Bound
Movement:     L  -  T  -  R    L  -  T  -  R    L  -  T  -  R    L  -  T  -  R
------------|---------------||---------------||---------------||---------------|
Control:        Stop Sign        Stop Sign       Uncontrolled     Uncontrolled
Rights:           Include          Include          Include          Include
Lanes:        0  1  0  0  0    0  0  1! 0  0    1  0  1  1  0    1  0  1  1  0
------------|---------------||---------------||---------------||---------------|
Volume Module:
Base Vol:       6    7     0    22    2     1     7   46     3     0   71    64
Growth Adj:  1.00 1.00  1.00  1.00 1.00  1.00  1.00 1.00  1.00  1.00 1.00  1.00
Initial Bse:    6    7     0    22    2     1     7   46     3     0   71    64
Added Vol:      0    0     0     0    0     0     0    0     0     0    0     0
PasserByVol:    0    0     0     0    0     0     0    0     0     0    0     0
Initial Fut:    6    7     0    22    2     1     7   46     3     0   71    64
User Adj:    1.00 1.00  1.00  1.00 1.00  1.00  1.00 1.00  1.00  1.00 1.00  1.00
PHF Adj:     1.00 1.00  1.00  1.00 1.00  1.00  1.00 1.00  1.00  1.00 1.00  1.00
PHF Volume:     6    7     0    22    2     1     7   46     3     0   71    64
Reduct Vol:     0    0     0     0    0     0     0    0     0     0    0     0
FinalVolume:    6    7     0    22    2     1     7   46     3     0   71    64
------------|---------------||---------------||---------------||---------------|
Critical Gap Module:
Critical Gp:  7.5  6.5 xxxxx   7.5  6.5   6.9   4.1 xxxx xxxxx xxxxx xxxx xxxxx
FollowUpTim:  3.5  4.0 xxxxx   3.5  4.0   3.3   2.2 xxxx xxxxx xxxxx xxxx xxxxx
------------|---------------||---------------||---------------||---------------|
Capacity Module:
Cnflict Vol:   98  197 xxxxx   144  166    68   135 xxxx xxxxx  xxxx xxxx xxxxx
Potent Cap.:  879  703 xxxxx   817  730   988  1462 xxxx xxxxx  xxxx xxxx xxxxx
Move Cap.:    873  699 xxxxx   808  727   988  1462 xxxx xxxxx  xxxx xxxx xxxxx
Volume/Cap:  0.01 0.01  xxxx  0.03 0.00  0.00  0.00 xxxx  xxxx  xxxx xxxx  xxxx
------------|---------------||---------------||---------------||---------------|
Level Of Service Module:
2Way95thQ:   xxxx xxxx xxxxx  xxxx xxxx xxxxx   0.0 xxxx xxxxx  xxxx xxxx xxxxx
Control Del:xxxxx xxxx xxxxx xxxxx xxxx xxxxx   7.5 xxxx xxxxx xxxxx xxxx xxxxx
LOS by Move:    *    *     *     *    *     *     A    *     *     *    *     *
Movement:     LT - LTR - RT    LT - LTR - RT    LT - LTR - RT    LT - LTR - RT
Shared Cap.:  770 xxxx xxxxx  xxxx  807 xxxxx  xxxx xxxx xxxxx  xxxx xxxx xxxxx
SharedQueue:  0.1 xxxx xxxxx xxxxx  0.1 xxxxx xxxxx xxxx xxxxx xxxxx xxxx xxxxx
Shrd ConDel:  9.8 xxxx xxxxx xxxxx  9.6 xxxxx xxxxx xxxx xxxxx xxxxx xxxx xxxxx
Shared LOS:     A    *     *     *    A     *     *    *     *     *    *     *
ApproachDel:       9.8              9.6           xxxxxx           xxxxxx
ApproachLOS:         A                A                *                *
*******************************************************************************
Note: Queue reported is the number of cars per lane.
*******************************************************************************

  Traffix 7.9.0215 (c) 2008 Dowling Assoc. Licensed to MMA, LONG BEACH, CA
```

Overlook Parkway Extension
Existing
AM Peak Hour

Level Of Service Computation Report
2000 HCM 4-Way Stop Method (Future Volume Alternative)

Intersection #51 Madison St/Victoria Ave (North)

Cycle (sec): 100 Critical Vol./Cap.(X): 0.401
Loss Time (sec): 0 (Y+R=4.0 sec) Average Delay (sec/veh): 9.7
Optimal Cycle: 0 Level Of Service: A

Street Name:	Madison St						Victoria Ave (North)					
Approach:	North Bound			South Bound			East Bound			West Bound		
Movement:	L -	T -	R	L -	T -	R	L -	T -	R	L -	T -	R
Control:	Stop Sign			Stop Sign			Stop Sign			Stop Sign		
Rights:	Include			Include			Include			Include		
Min. Green:	7	7	7	7	7	7	7	7	7	7	7	7
Lanes:	0 1	0 0	0	0 0	1 0	1	0 0	0 0	0	0 1	0 0	1
Volume Module:												
Base Vol:	11	68	0	0	92	23	0	0	0	3	280	104
Growth Adj:	1.00	1.00	1.00	1.00	1.00	1.00	1.00	1.00	1.00	1.00	1.00	1.00
Initial Bse:	11	68	0	0	92	23	0	0	0	3	280	104
Added Vol:	0	0	0	0	0	0	0	0	0	0	0	0
PasserByVol:	0	0	0	0	0	0	0	0	0	0	0	0
Initial Fut:	11	68	0	0	92	23	0	0	0	3	280	104
User Adj:	1.00	1.00	1.00	1.00	1.00	1.00	1.00	1.00	1.00	1.00	1.00	1.00
PHF Adj:	1.00	1.00	1.00	1.00	1.00	1.00	1.00	1.00	1.00	1.00	1.00	1.00
PHF Volume:	11	68	0	0	92	23	0	0	0	3	280	104
Reduct Vol:	0	0	0	0	0	0	0	0	0	0	0	0
Reduced Vol:	11	68	0	0	92	23	0	0	0	3	280	104
PCE Adj:	1.00	1.00	1.00	1.00	1.00	1.00	1.00	1.00	1.00	1.00	1.00	1.00
MLF Adj:	1.00	1.00	1.00	1.00	1.00	1.00	1.00	1.00	1.00	1.00	1.00	1.00
FinalVolume:	11	68	0	0	92	23	0	0	0	3	280	104
Saturation Flow Module:												
Adjustment:	1.00	1.00	1.00	1.00	1.00	1.00	1.00	1.00	1.00	1.00	1.00	1.00
Lanes:	0.14	0.86	0.00	0.00	1.00	1.00	0.00	0.00	0.00	0.01	0.99	1.00
Final Sat.:	86	533	0	0	623	708	0	0	0	7	697	816
Capacity Analysis Module:												
Vol/Sat:	0.13	0.13	xxxx	xxxx	0.15	0.03	xxxx	xxxx	xxxx	0.40	0.40	0.13
Crit Moves:		****			****					****		
Delay/Veh:	9.3	9.3	0.0	0.0	9.1	7.6	0.0	0.0	0.0	10.9	10.9	7.6
Delay Adj:	1.00	1.00	1.00	1.00	1.00	1.00	1.00	1.00	1.00	1.00	1.00	1.00
AdjDel/Veh:	9.3	9.3	0.0	0.0	9.1	7.6	0.0	0.0	0.0	10.9	10.9	7.6
LOS by Move:	A	A	*	*	A	A	*	*	*	B	B	A
ApproachDel:	9.3			8.8			xxxxxx			10.0		
Delay Adj:	1.00			1.00			xxxxx			1.00		
ApprAdjDel:	9.3			8.8			xxxxxx			10.0		
LOS by Appr:	A			A			*			B		
AllWayAvgQ:	0.1	0.1	0.1	0.0	0.2	0.0	0.0	0.0	0.0	0.6	0.6	0.1

Overlook Parkway Extension
Existing
AM Peak Hour

Note: Queue reported is the number of cars per lane.

Overlook Parkway Extension
Existing
AM Peak Hour

Level Of Service Computation Report
2000 HCM 4-Way Stop Method (Future Volume Alternative)

Intersection #52 Madison St/Victoria Ave (South)

Cycle (sec): 100 Critical Vol./Cap.(X): 0.382
Loss Time (sec): 0 (Y+R=4.0 sec) Average Delay (sec/veh): 9.3
Optimal Cycle: 0 Level Of Service: A

Street Name:	Madison ST							Victoria Ave (South)					
Approach:	North Bound			South Bound				East Bound			West Bound		
Movement:	L	- T	- R	L	- T	- R		L	- T	- R	L	- T	- R
Control:	Stop Sign			Stop Sign				Stop Sign			Stop Sign		
Rights:	Include			Include				Include			Include		
Min. Green:	7	7	7	7	7	7		7	7	7	7	7	7
Lanes:	0 0	0 1	0	0 1	0 0	0		0 0	1! 0	0	0 0	0 0	0
Volume Module:													
Base Vol:	0	40	9	62	33	0		39	273	5	0	0	0
Growth Adj:	1.00	1.00	1.00	1.00	1.00	1.00		1.00	1.00	1.00	1.00	1.00	1.00
Initial Bse:	0	40	9	62	33	0		39	273	5	0	0	0
Added Vol:	0	0	0	0	0	0		0	0	0	0	0	0
PasserByVol:	0	0	0	0	0	0		0	0	0	0	0	0
Initial Fut:	0	40	9	62	33	0		39	273	5	0	0	0
User Adj:	1.00	1.00	1.00	1.00	1.00	1.00		1.00	1.00	1.00	1.00	1.00	1.00
PHF Adj:	1.00	1.00	1.00	1.00	1.00	1.00		1.00	1.00	1.00	1.00	1.00	1.00
PHF Volume:	0	40	9	62	33	0		39	273	5	0	0	0
Reduct Vol:	0	0	0	0	0	0		0	0	0	0	0	0
Reduced Vol:	0	40	9	62	33	0		39	273	5	0	0	0
PCE Adj:	1.00	1.00	1.00	1.00	1.00	1.00		1.00	1.00	1.00	1.00	1.00	1.00
MLF Adj:	1.00	1.00	1.00	1.00	1.00	1.00		1.00	1.00	1.00	1.00	1.00	1.00
FinalVolume:	0	40	9	62	33	0		39	273	5	0	0	0
Saturation Flow Module:													
Adjustment:	1.00	1.00	1.00	1.00	1.00	1.00		1.00	1.00	1.00	1.00	1.00	1.00
Lanes:	0.00	0.82	0.18	0.65	0.35	0.00		0.12	0.86	0.02	0.00	0.00	0.00
Final Sat.:	0	600	135	466	248	0		102	715	13	0	0	0
Capacity Analysis Module:													
Vol/Sat:	xxxx	0.07	0.07	0.13	0.13	xxxx		0.38	0.38	0.38	xxxx	xxxx	xxxx
Crit Moves:		****			****				****				
Delay/Veh:	0.0	7.9	7.9	8.5	8.5	0.0		9.8	9.8	9.8	0.0	0.0	0.0
Delay Adj:	1.00	1.00	1.00	1.00	1.00	1.00		1.00	1.00	1.00	1.00	1.00	1.00
AdjDel/Veh:	0.0	7.9	7.9	8.5	8.5	0.0		9.8	9.8	9.8	0.0	0.0	0.0
LOS by Move:	*	A	A	A	A	*		A	A	A	*	*	*
ApproachDel:		7.9			8.5				9.8			xxxxxx	
Delay Adj:		1.00			1.00				1.00			xxxxx	
ApprAdjDel:		7.9			8.5				9.8			xxxxxx	
LOS by Appr:		A			A				A			*	
AllWayAvgQ:	0.1	0.1	0.1	0.1	0.1	0.1		0.6	0.6	0.6	0.0	0.0	0.0

Overlook Parkway Extension
Existing
AM Peak Hour

Note: Queue reported is the number of cars per lane.

Overlook Parkway Extension
Existing
AM Peak Hour

Level Of Service Computation Report
2000 HCM 4-Way Stop Method (Future Volume Alternative)

Intersection #81 Washington St/Victoria Ave (North)

Cycle (sec): 100 Critical Vol./Cap.(X): 0.570
Loss Time (sec): 0 (Y+R=4.0 sec) Average Delay (sec/veh): 14.5
Optimal Cycle: 0 Level Of Service: B

Street Name:	Washington St							Victoria Ave (North)					
Approach:	North Bound			South Bound				East Bound			West Bound		
Movement:	L -	T -	R	L -	T -	R		L -	T -	R	L -	T -	R
Control:	Stop Sign			Stop Sign				Stop Sign			Stop Sign		
Rights:	Include			Include				Include			Include		
Min. Green:	7	7	7	7	7	7		7	7	7	7	7	7
Lanes:	0 1	1 0	1	0 0	0 1	0		0 0	0 0	0	1 0	0 1	0
Volume Module:													
Base Vol:	153	513	0	0	138	5		0	0	0	123	234	19
Growth Adj:	1.00	1.00	1.00	1.00	1.00	1.00		1.00	1.00	1.00	1.00	1.00	1.00
Initial Bse:	153	513	0	0	138	5		0	0	0	123	234	19
Added Vol:	0	0	0	0	0	0		0	0	0	0	0	0
PasserByVol:	0	0	0	0	0	0		0	0	0	0	0	0
Initial Fut:	153	513	0	0	138	5		0	0	0	123	234	19
User Adj:	1.00	1.00	1.00	1.00	1.00	1.00		1.00	1.00	1.00	1.00	1.00	1.00
PHF Adj:	1.00	1.00	1.00	1.00	1.00	1.00		1.00	1.00	1.00	1.00	1.00	1.00
PHF Volume:	153	513	0	0	138	5		0	0	0	123	234	19
Reduct Vol:	0	0	0	0	0	0		0	0	0	0	0	0
Reduced Vol:	153	513	0	0	138	5		0	0	0	123	234	19
PCE Adj:	1.00	1.00	1.00	1.00	1.00	1.00		1.00	1.00	1.00	1.00	1.00	1.00
MLF Adj:	1.00	1.00	1.00	1.00	1.00	1.00		1.00	1.00	1.00	1.00	1.00	1.00
FinalVolume:	153	513	0	0	138	5		0	0	0	123	234	19
Saturation Flow Module:													
Adjustment:	1.00	1.00	1.00	1.00	1.00	1.00		1.00	1.00	1.00	1.00	1.00	1.00
Lanes:	0.46	1.54	1.00	0.00	0.97	0.03		0.00	0.00	0.00	1.00	0.92	0.08
Final Sat.:	269	923	682	0	534	19		0	0	0	503	505	41
Capacity Analysis Module:													
Vol/Sat:	0.57	0.56	0.00	xxxx	0.26	0.26		xxxx	xxxx	xxxx	0.24	0.46	0.46
Crit Moves:	****				****							****	
Delay/Veh:	16.3	15.6	0.0	0.0	11.4	11.4		0.0	0.0	0.0	11.7	14.1	14.1
Delay Adj:	1.00	1.00	1.00	1.00	1.00	1.00		1.00	1.00	1.00	1.00	1.00	1.00
AdjDel/Veh:	16.3	15.6	0.0	0.0	11.4	11.4		0.0	0.0	0.0	11.7	14.1	14.1
LOS by Move:	C	C	*	*	B	B		*	*	*	B	B	B
ApproachDel:	15.7				11.4			xxxxxx			13.3		
Delay Adj:	1.00				1.00			xxxxx			1.00		
ApprAdjDel:	15.7				11.4			xxxxxx			13.3		
LOS by Appr:	C				B			*			B		
AllWayAvgQ:	1.2	1.1	0.0	0.3	0.3	0.3		0.0	0.0	0.0	0.3	0.8	0.8

Overlook Parkway Extension
Existing
AM Peak Hour

Note: Queue reported is the number of cars per lane.

Overlook Parkway Extension
Existing
AM Peak Hour

Level Of Service Computation Report
2000 HCM 4-Way Stop Method (Future Volume Alternative)

Intersection #82 Washington St/Victoria Ave (South)

Cycle (sec): 100 Critical Vol./Cap.(X): 0.677
Loss Time (sec): 0 (Y+R=4.0 sec) Average Delay (sec/veh): 15.8
Optimal Cycle: 0 Level Of Service: C

Street Name:	Washington St						Victoria Ave (South)					
Approach:	North Bound			South Bound			East Bound			West Bound		
Movement:	L -	T -	R	L -	T -	R	L -	T -	R	L -	T -	R
Control:	Stop Sign			Stop Sign			Stop Sign			Stop Sign		
Rights:	Include			Include			Include			Include		
Min. Green:	7	7	7	7	7	7	7	7	7	7	7	7
Lanes:	0 0	2 0	1	0 1	0 0	0	0 1	0 0	1	0 0	0 0	0
Volume Module:												
Base Vol:	0	660	465	13	248	0	6	229	74	0	0	0
Growth Adj:	1.00	1.00	1.00	1.00	1.00	1.00	1.00	1.00	1.00	1.00	1.00	1.00
Initial Bse:	0	660	465	13	248	0	6	229	74	0	0	0
Added Vol:	0	0	0	0	0	0	0	0	0	0	0	0
PasserByVol:	0	0	0	0	0	0	0	0	0	0	0	0
Initial Fut:	0	660	465	13	248	0	6	229	74	0	0	0
User Adj:	1.00	1.00	1.00	1.00	1.00	1.00	1.00	1.00	1.00	1.00	1.00	1.00
PHF Adj:	1.00	1.00	1.00	1.00	1.00	1.00	1.00	1.00	1.00	1.00	1.00	1.00
PHF Volume:	0	660	465	13	248	0	6	229	74	0	0	0
Reduct Vol:	0	0	0	0	0	0	0	0	0	0	0	0
Reduced Vol:	0	660	465	13	248	0	6	229	74	0	0	0
PCE Adj:	1.00	1.00	1.00	1.00	1.00	1.00	1.00	1.00	1.00	1.00	1.00	1.00
MLF Adj:	1.00	1.00	1.00	1.00	1.00	1.00	1.00	1.00	1.00	1.00	1.00	1.00
FinalVolume:	0	660	465	13	248	0	6	229	74	0	0	0
Saturation Flow Module:												
Adjustment:	1.00	1.00	1.00	1.00	1.00	1.00	1.00	1.00	1.00	1.00	1.00	1.00
Lanes:	0.00	2.00	1.00	0.05	0.95	0.00	0.03	0.97	1.00	0.00	0.00	0.00
Final Sat.:	0	1211	687	28	527	0	12	473	534	0	0	0
Capacity Analysis Module:												
Vol/Sat:	xxxx	0.55	0.68	0.47	0.47	xxxx	0.48	0.48	0.14	xxxx	xxxx	xxxx
Crit Moves:			****		****			****				
Delay/Veh:	0.0	15.3	17.8	14.8	14.8	0.0	15.8	15.8	10.1	0.0	0.0	0.0
Delay Adj:	1.00	1.00	1.00	1.00	1.00	1.00	1.00	1.00	1.00	1.00	1.00	1.00
AdjDel/Veh:	0.0	15.3	17.8	14.8	14.8	0.0	15.8	15.8	10.1	0.0	0.0	0.0
LOS by Move:	*	C	C	B	B	*	C	C	B	*	*	*
ApproachDel:	16.3			14.8			14.5			xxxxxx		
Delay Adj:	1.00			1.00			1.00			xxxxx		
ApprAdjDel:	16.3			14.8			14.5			xxxxxx		
LOS by Appr:	C			B			B			*		
AllWayAvgQ:	0.0	1.1	1.9	0.8	0.8	0.8	0.8	0.8	0.1	0.0	0.0	0.0

Overlook Parkway Extension
Existing
AM Peak Hour

Note: Queue reported is the number of cars per lane.

Overlook Parkway Extension
Existing
AM Peak Hour

Level Of Service Computation Report
2000 HCM 4-Way Stop Method (Future Volume Alternative)

Intersection #221 Mary St/Victoria Ave (North)

Cycle (sec): 100 Critical Vol./Cap.(X): 0.812
Loss Time (sec): 0 (Y+R=4.0 sec) Average Delay (sec/veh): 21.5
Optimal Cycle: 0 Level Of Service: C

Street Name:	Mary St							Victoria Ave (North)					
Approach:	North Bound			South Bound				East Bound			West Bound		
Movement:	L	- T	- R	L	- T	- R		L	- T	- R	L	- T	- R
Control:	Stop Sign			Stop Sign				Stop Sign			Stop Sign		
Rights:	Include			Include				Include			Include		
Min. Green:	7	7	7	7	7	7		7	7	7	7	7	7
Lanes:	0 1	0 0	0	0 0	0 1	0		0 0	0 0	0	0 0	1! 0	0
Volume Module:													
Base Vol:	13	504	0	0	172	68		0	0	0	44	271	121
Growth Adj:	1.00	1.00	1.00	1.00	1.00	1.00		1.00	1.00	1.00	1.00	1.00	1.00
Initial Bse:	13	504	0	0	172	68		0	0	0	44	271	121
Added Vol:	0	0	0	0	0	0		0	0	0	0	0	0
PasserByVol:	0	0	0	0	0	0		0	0	0	0	0	0
Initial Fut:	13	504	0	0	172	68		0	0	0	44	271	121
User Adj:	1.00	1.00	1.00	1.00	1.00	1.00		1.00	1.00	1.00	1.00	1.00	1.00
PHF Adj:	1.00	1.00	1.00	1.00	1.00	1.00		1.00	1.00	1.00	1.00	1.00	1.00
PHF Volume:	13	504	0	0	172	68		0	0	0	44	271	121
Reduct Vol:	0	0	0	0	0	0		0	0	0	0	0	0
Reduced Vol:	13	504	0	0	172	68		0	0	0	44	271	121
PCE Adj:	1.00	1.00	1.00	1.00	1.00	1.00		1.00	1.00	1.00	1.00	1.00	1.00
MLF Adj:	1.00	1.00	1.00	1.00	1.00	1.00		1.00	1.00	1.00	1.00	1.00	1.00
FinalVolume:	13	504	0	0	172	68		0	0	0	44	271	121
Saturation Flow Module:													
Adjustment:	1.00	1.00	1.00	1.00	1.00	1.00		1.00	1.00	1.00	1.00	1.00	1.00
Lanes:	0.03	0.97	0.00	0.00	0.72	0.28		0.00	0.00	0.00	0.10	0.62	0.28
Final Sat.:	16	620	0	0	420	166		0	0	0	62	382	170
Capacity Analysis Module:													
Vol/Sat:	0.81	0.81	xxxx	xxxx	0.41	0.41		xxxx	xxxx	xxxx	0.71	0.71	0.71
Crit Moves:		****			****							****	
Delay/Veh:	26.9	26.9	0.0	0.0	12.4	12.4		0.0	0.0	0.0	20.1	20.1	20.1
Delay Adj:	1.00	1.00	1.00	1.00	1.00	1.00		1.00	1.00	1.00	1.00	1.00	1.00
AdjDel/Veh:	26.9	26.9	0.0	0.0	12.4	12.4		0.0	0.0	0.0	20.1	20.1	20.1
LOS by Move:	D	D	*	*	B	B		*	*	*	C	C	C
ApproachDel:	26.9				12.4			xxxxxx			20.1		
Delay Adj:	1.00				1.00			xxxxx			1.00		
ApprAdjDel:	26.9				12.4			xxxxxx			20.1		
LOS by Appr:	D				B			*			C		
AllWayAvgQ:	3.2	3.2	3.2	0.6	0.6	0.6		0.0	0.0	0.0	1.9	1.9	1.9

Overlook Parkway Extension
Existing
AM Peak Hour

Note: Queue reported is the number of cars per lane.

Overlook Parkway Extension
Existing
AM Peak Hour

Level Of Service Computation Report
2000 HCM 4-Way Stop Method (Future Volume Alternative)

Intersection #222 Mary St/Victoria Ave (South)

Cycle (sec): 100 Critical Vol./Cap.(X): 0.623
Loss Time (sec): 0 (Y+R=4.0 sec) Average Delay (sec/veh): 16.2
Optimal Cycle: 0 Level Of Service: C

Street Name:	Mary St							Victoria Ave (South)					
Approach:	North Bound			South Bound				East Bound			West Bound		
Movement:	L	- T	- R	L	- T	- R		L	- T	- R	L	- T	- R
Control:	Stop Sign			Stop Sign				Stop Sign			Stop Sign		
Rights:	Include			Include				Include			Include		
Min. Green:	7	7	7	7	7	7		7	7	7	7	7	7
Lanes:	0 0	0 1	0	0 1	0 0	0		1 0	0 1	0	0 0	0 0	0
Volume Module:													
Base Vol:	0	204	167	64	152	0		313	353	16	0	0	0
Growth Adj:	1.00	1.00	1.00	1.00	1.00	1.00		1.00	1.00	1.00	1.00	1.00	1.00
Initial Bse:	0	204	167	64	152	0		313	353	16	0	0	0
Added Vol:	0	0	0	0	0	0		0	0	0	0	0	0
PasserByVol:	0	0	0	0	0	0		0	0	0	0	0	0
Initial Fut:	0	204	167	64	152	0		313	353	16	0	0	0
User Adj:	1.00	1.00	1.00	1.00	1.00	1.00		1.00	1.00	1.00	1.00	1.00	1.00
PHF Adj:	1.00	1.00	1.00	1.00	1.00	1.00		1.00	1.00	1.00	1.00	1.00	1.00
PHF Volume:	0	204	167	64	152	0		313	353	16	0	0	0
Reduct Vol:	0	0	0	0	0	0		0	0	0	0	0	0
Reduced Vol:	0	204	167	64	152	0		313	353	16	0	0	0
PCE Adj:	1.00	1.00	1.00	1.00	1.00	1.00		1.00	1.00	1.00	1.00	1.00	1.00
MLF Adj:	1.00	1.00	1.00	1.00	1.00	1.00		1.00	1.00	1.00	1.00	1.00	1.00
FinalVolume:	0	204	167	64	152	0		313	353	16	0	0	0
Saturation Flow Module:													
Adjustment:	1.00	1.00	1.00	1.00	1.00	1.00		1.00	1.00	1.00	1.00	1.00	1.00
Lanes:	0.00	0.55	0.45	0.30	0.70	0.00		1.00	0.96	0.04	0.00	0.00	0.00
Final Sat.:	0	348	285	169	401	0		544	566	26	0	0	0
Capacity Analysis Module:													
Vol/Sat:	xxxx	0.59	0.59	0.38	0.38	xxxx		0.57	0.62	0.62	xxxx	xxxx	xxxx
Crit Moves:		****			****					****			
Delay/Veh:	0.0	15.7	15.7	12.6	12.6	0.0		17.4	17.8	17.8	0.0	0.0	0.0
Delay Adj:	1.00	1.00	1.00	1.00	1.00	1.00		1.00	1.00	1.00	1.00	1.00	1.00
AdjDel/Veh:	0.0	15.7	15.7	12.6	12.6	0.0		17.4	17.8	17.8	0.0	0.0	0.0
LOS by Move:	*	C	C	B	B	*		C	C	C	*	*	*
ApproachDel:		15.7			12.6				17.6			xxxxxx	
Delay Adj:		1.00			1.00				1.00			xxxxx	
ApprAdjDel:		15.7			12.6				17.6			xxxxxx	
LOS by Appr:		C			B				C			*	
AllWayAvgQ:	1.3	1.3	1.3	0.6	0.6	0.6		1.2	1.5	1.5	0.0	0.0	0.0

Overlook Parkway Extension
Existing
AM Peak Hour

Note: Queue reported is the number of cars per lane.

Overlook Parkway Extension
Existing
PM Peak Hour

Scenario Report

Scenario:	Existing PM
Command:	Existing PM
Volume:	Existing PM
Geometry:	Existing
Impact Fee:	Default Impact Fee
Trip Generation:	none
Trip Distribution:	none
Paths:	Default Path
Routes:	Default Route
Configuration:	Existing PM

Traffix 7.9.0215 (c) 2008 Dowling Assoc. Licensed to MMA, LONG BEACH, CA

Overlook Parkway Extension
Existing
PM Peak Hour

Impact Analysis Report
Level Of Service

Intersection	Base LOS	Base Del/ Veh	Base V/ C	Future LOS	Future Del/ Veh	Future V/ C	Change in
# 1 Madison St/SR-91 WB Ramps	C	26.5	0.592	C	26.5	0.592	+ 0.000 D/V
# 2 Madison St/SR-91 EB Ramps	C	27.5	0.480	C	27.5	0.480	+ 0.000 D/V
# 3 Madison St/Indiana Ave	D	35.4	0.640	D	35.4	0.640	+ 0.000 D/V
# 4 Madison St/Lincoln Ave	C	29.9	0.373	C	29.9	0.373	+ 0.000 D/V
# 6 Washington St/Indiana Ave	C	23.5	0.441	C	23.5	0.441	+ 0.000 D/V
# 7 Washington St/Lincoln Ave	C	15.3	0.594	C	15.3	0.594	+ 0.000 V/C
# 9 Washington St/Overlook Pkwy	B	11.1	0.227	B	11.1	0.227	+ 0.000 D/V
# 10 Riverside Ave-SR-91 WB/Arlingt	C	31.6	0.764	C	31.6	0.764	+ 0.000 D/V
# 11 Indiana Ave-SR-91 EB/Arlington	C	27.7	0.648	C	27.7	0.648	+ 0.000 D/V
# 12 Victoria Ave/Arlington Ave	D	36.3	0.828	D	36.3	0.828	+ 0.000 D/V
# 13 Alessandro Blvd/Arlington Ave	D	41.0	0.918	D	41.0	0.918	+ 0.000 D/V
# 14 Alessandro Blvd/Overlook Pkwy	C	24.8	0.734	C	24.8	0.734	+ 0.000 D/V
# 15 Alessandro Blvd/Trautwein Rd	C	21.6	0.630	C	21.6	0.630	+ 0.000 D/V
# 16 Crystal View Ter/Overlook Pkwy	A	7.0	0.006	A	7.0	0.006	+ 0.000 V/C
# 17 Kingdom Dr/Overlook Pkwy	A	8.7	0.000	A	8.7	0.000	+ 0.000 D/V
# 18 Kingdom Dr/Green Orchard Pl	A	8.4	0.000	A	8.4	0.000	+ 0.000 D/V
# 19 Trautwein Rd/John F. Kennedy D	C	20.3	0.632	C	20.3	0.632	+ 0.000 D/V
# 20 Washington St/Bradley St	C	25.4	0.611	C	25.4	0.611	+ 0.000 D/V
# 21 Alessandro Blvd/Via Vista Dr	B	17.2	0.705	B	17.2	0.705	+ 0.000 D/V
# 23 Mary St/Hawarden Dr	A	7.8	0.211	A	7.8	0.211	+ 0.000 V/C
# 24 Hawarden Dr/Overlook Pkwy	A	7.8	0.095	A	7.8	0.095	+ 0.000 V/C
# 25 Crystal View Ter/Berry Rd	A	6.9	0.045	A	6.9	0.045	+ 0.000 V/C
# 26 Corinthian Wy/Berry Rd	A	6.9	0.044	A	6.9	0.044	+ 0.000 V/C

Traffix 7.9.0215 (c) 2008 Dowling Assoc. Licensed to MMA, LONG BEACH, CA

Overlook Parkway Extension
Existing
PM Peak Hour

Intersection	Base LOS	Base Del/ Veh	Base V/ C	Future LOS	Future Del/ Veh	Future V/ C	Change in
# 28 Orozco Dr/Overlook Pkwy	A	9.5	0.000	A	9.5	0.000	+ 0.000 D/V
# 51 Madison St/Victoria Ave (North	B	10.2	0.357	B	10.2	0.357	+ 0.000 V/C
# 52 Madison St/Victoria Ave (South	B	10.2	0.407	B	10.2	0.407	+ 0.000 V/C
# 81 Washington St/Victoria Ave (No	B	14.0	0.578	B	14.0	0.578	+ 0.000 V/C
# 82 Washington St/Victoria Ave (So	D	30.5	0.989	D	30.5	0.989	+ 0.000 V/C
#221 Mary St/Victoria Ave (North)	D	25.4	0.842	D	25.4	0.842	+ 0.000 V/C
#222 Mary St/Victoria Ave (South)	B	13.4	0.626	B	13.4	0.626	+ 0.000 V/C

Overlook Parkway Extension
Existing
PM Peak Hour

Level Of Service Computation Report
2000 HCM Operations Method (Future Volume Alternative)

Intersection #1 Madison St/SR-91 WB Ramps

Cycle (sec): 100 Critical Vol./Cap.(X): 0.592
Loss Time (sec): 12 (Y+R=4.0 sec) Average Delay (sec/veh): 26.5
Optimal Cycle: 50 Level Of Service: C

Street Name:	Madison St						SR-91 WB Ramps					
Approach:	North Bound			South Bound			East Bound			West Bound		
Movement:	L -	T -	R	L -	T -	R	L -	T -	R	L -	T -	R
Control:	Protected			Protected			Split Phase			Split Phase		
Rights:	Include			Include			Include			Include		
Min. Green:	7	7	7	7	7	7	7	7	7	7	7	7
Lanes:	1 0	2 0	0	0 0	3 0	1	0 0	0 0	0	0 1	0 0	1
Volume Module:												
Base Vol:	328	663	0	0	671	318	0	0	0	246	2	201
Growth Adj:	1.00	1.00	1.00	1.00	1.00	1.00	1.00	1.00	1.00	1.00	1.00	1.00
Initial Bse:	328	663	0	0	671	318	0	0	0	246	2	201
Added Vol:	0	0	0	0	0	0	0	0	0	0	0	0
PasserByVol:	0	0	0	0	0	0	0	0	0	0	0	0
Initial Fut:	328	663	0	0	671	318	0	0	0	246	2	201
User Adj:	1.00	1.00	1.00	1.00	1.00	1.00	1.00	1.00	1.00	1.00	1.00	1.00
PHF Adj:	1.00	1.00	1.00	1.00	1.00	1.00	1.00	1.00	1.00	1.00	1.00	1.00
PHF Volume:	328	663	0	0	671	318	0	0	0	246	2	201
Reduct Vol:	0	0	0	0	0	0	0	0	0	0	0	0
Reduced Vol:	328	663	0	0	671	318	0	0	0	246	2	201
PCE Adj:	1.00	1.00	1.00	1.00	1.00	1.00	1.00	1.00	1.00	1.00	1.00	1.00
MLF Adj:	1.00	1.00	1.00	1.00	1.00	1.00	1.00	1.00	1.00	1.00	1.00	1.00
FinalVolume:	328	663	0	0	671	318	0	0	0	246	2	201
Saturation Flow Module:												
Sat/Lane:	1900	1900	1900	1900	1900	1900	1900	1900	1900	1900	1900	1900
Adjustment:	0.95	0.95	1.00	1.00	0.91	0.85	1.00	1.00	1.00	0.92	0.92	0.85
Lanes:	1.00	2.00	0.00	0.00	3.00	1.00	0.00	0.00	0.00	0.99	0.01	1.00
Final Sat.:	1805	3610	0	0	5187	1615	0	0	0	1730	14	1615
Capacity Analysis Module:												
Vol/Sat:	0.18	0.18	0.00	0.00	0.13	0.20	0.00	0.00	0.00	0.14	0.14	0.12
Crit Moves:	****					****				****		
Green/Cycle:	0.31	0.46	0.00	0.00	0.33	0.33	0.00	0.00	0.00	0.24	0.24	0.24
Volume/Cap:	0.59	0.40	0.00	0.00	0.39	0.59	0.00	0.00	0.00	0.59	0.59	0.52
Delay/Veh:	31.1	17.8	0.0	0.0	25.7	29.5	0.0	0.0	0.0	35.9	35.9	34.2
User DelAdj:	1.00	1.00	1.00	1.00	1.00	1.00	1.00	1.00	1.00	1.00	1.00	1.00
AdjDel/Veh:	31.1	17.8	0.0	0.0	25.7	29.5	0.0	0.0	0.0	35.9	35.9	34.2
LOS by Move:	C	B	A	A	C	C	A	A	A	D	D	C
HCM2kAvgQ:	9	7	0	0	6	9	0	0	0	7	7	6

Note: Queue reported is the number of cars per lane.

Overlook Parkway Extension
Existing
PM Peak Hour

Level Of Service Computation Report
2000 HCM Operations Method (Future Volume Alternative)

Intersection #2 Madison St/SR-91 EB Ramps

Cycle (sec): 100 Critical Vol./Cap.(X): 0.480
Loss Time (sec): 12 (Y+R=4.0 sec) Average Delay (sec/veh): 27.5
Optimal Cycle: 50 Level Of Service: C

Street Name:	Madison St						SR-91 EB Ramps					
Approach:	North Bound			South Bound			East Bound			West Bound		
Movement:	L - T - R			L - T - R			L - T - R			L - T - R		
Control:	Protected			Protected			Protected			Protected		
Rights:	Include			Include			Include			Include		
Min. Green:	7	7	7	7	7	7	7	7	7	7	7	7
Lanes:	0 0	3 0	1	1 0	2 0	0	0 1	0 0	1	0 0	0 0	0
Volume Module:												
Base Vol:	0	751	221	218	666	0	234	0	254	0	0	0
Growth Adj:	1.00	1.00	1.00	1.00	1.00	1.00	1.00	1.00	1.00	1.00	1.00	1.00
Initial Bse:	0	751	221	218	666	0	234	0	254	0	0	0
Added Vol:	0	0	0	0	0	0	0	0	0	0	0	0
PasserByVol:	0	0	0	0	0	0	0	0	0	0	0	0
Initial Fut:	0	751	221	218	666	0	234	0	254	0	0	0
User Adj:	1.00	1.00	1.00	1.00	1.00	1.00	1.00	1.00	1.00	1.00	1.00	1.00
PHF Adj:	1.00	1.00	1.00	1.00	1.00	1.00	1.00	1.00	1.00	1.00	1.00	1.00
PHF Volume:	0	751	221	218	666	0	234	0	254	0	0	0
Reduct Vol:	0	0	0	0	0	0	0	0	0	0	0	0
Reduced Vol:	0	751	221	218	666	0	234	0	254	0	0	0
PCE Adj:	1.00	1.00	1.00	1.00	1.00	1.00	1.00	1.00	1.00	1.00	1.00	1.00
MLF Adj:	1.00	1.00	1.00	1.00	1.00	1.00	1.00	1.00	1.00	1.00	1.00	1.00
FinalVolume:	0	751	221	218	666	0	234	0	254	0	0	0
Saturation Flow Module:												
Sat/Lane:	1900	1900	1900	1900	1900	1900	1900	1900	1900	1900	1900	1900
Adjustment:	1.00	0.91	0.85	0.95	0.95	1.00	0.95	1.00	0.85	1.00	1.00	1.00
Lanes:	0.00	3.00	1.00	1.00	2.00	0.00	1.00	0.00	1.00	0.00	0.00	0.00
Final Sat.:	0	5187	1615	1805	3610	0	1809	0	1615	0	0	0
Capacity Analysis Module:												
Vol/Sat:	0.00	0.14	0.14	0.12	0.18	0.00	0.13	0.00	0.16	0.00	0.00	0.00
Crit Moves:		****		****					****			
Green/Cycle:	0.00	0.30	0.30	0.25	0.40	0.00	0.26	0.00	0.33	0.00	0.00	0.00
Volume/Cap:	0.00	0.48	0.45	0.48	0.46	0.00	0.50	0.00	0.48	0.00	0.00	0.00
Delay/Veh:	0.0	28.8	29.0	32.7	22.3	0.0	32.5	0.0	27.5	0.0	0.0	0.0
User DelAdj:	1.00	1.00	1.00	1.00	1.00	1.00	1.00	1.00	1.00	1.00	1.00	1.00
AdjDel/Veh:	0.0	28.8	29.0	32.7	22.3	0.0	32.5	0.0	27.5	0.0	0.0	0.0
LOS by Move:	A	C	C	C	C	A	C	A	C	A	A	A
HCM2kAvgQ:	0	7	6	6	8	0	7	0	7	0	0	0

Note: Queue reported is the number of cars per lane.

Traffix 7.9.0215 (c) 2008 Dowling Assoc. Licensed to MMA, LONG BEACH, CA

Overlook Parkway Extension
Existing
PM Peak Hour

Level Of Service Computation Report
2000 HCM Operations Method (Future Volume Alternative)

Intersection #3 Madison St/Indiana Ave

Cycle (sec): 100 Critical Vol./Cap.(X): 0.640
Loss Time (sec): 16 (Y+R=4.0 sec) Average Delay (sec/veh): 35.4
Optimal Cycle: 61 Level Of Service: D

Street Name:	Madison St						Indiana Ave					
Approach:	North Bound			South Bound			East Bound			West Bound		
Movement:	L - T - R			L - T - R			L - T - R			L - T - R		
Control:	Protected			Protected			Protected			Protected		
Rights:	Include			Include			Include			Include		
Min. Green:	7	7	7	7	7	7	7	7	7	7	7	7
Lanes:	1 0	1 1	0	1 0	1 1	0	1 0	1 1	0	1 0	1 1	0
Volume Module:												
Base Vol:	57	447	14	256	542	102	220	339	43	70	238	243
Growth Adj:	1.00	1.00	1.00	1.00	1.00	1.00	1.00	1.00	1.00	1.00	1.00	1.00
Initial Bse:	57	447	14	256	542	102	220	339	43	70	238	243
Added Vol:	0	0	0	0	0	0	0	0	0	0	0	0
PasserByVol:	0	0	0	0	0	0	0	0	0	0	0	0
Initial Fut:	57	447	14	256	542	102	220	339	43	70	238	243
User Adj:	1.00	1.00	1.00	1.00	1.00	1.00	1.00	1.00	1.00	1.00	1.00	1.00
PHF Adj:	1.00	1.00	1.00	1.00	1.00	1.00	1.00	1.00	1.00	1.00	1.00	1.00
PHF Volume:	57	447	14	256	542	102	220	339	43	70	238	243
Reduct Vol:	0	0	0	0	0	0	0	0	0	0	0	0
Reduced Vol:	57	447	14	256	542	102	220	339	43	70	238	243
PCE Adj:	1.00	1.00	1.00	1.00	1.00	1.00	1.00	1.00	1.00	1.00	1.00	1.00
MLF Adj:	1.00	1.00	1.00	1.00	1.00	1.00	1.00	1.00	1.00	1.00	1.00	1.00
FinalVolume:	57	447	14	256	542	102	220	339	43	70	238	243
Saturation Flow Module:												
Sat/Lane:	1900	1900	1900	1900	1900	1900	1900	1900	1900	1900	1900	1900
Adjustment:	0.95	0.95	0.95	0.95	0.93	0.93	0.95	0.93	0.93	0.95	0.88	0.88
Lanes:	1.00	1.94	0.06	1.00	1.68	0.32	1.00	1.77	0.23	1.00	1.00	1.00
Final Sat.:	1805	3486	109	1805	2965	558	1805	3149	399	1805	1668	1668
Capacity Analysis Module:												
Vol/Sat:	0.03	0.13	0.13	0.14	0.18	0.18	0.12	0.11	0.11	0.04	0.14	0.15
Crit Moves:		****		****			****					****
Green/Cycle:	0.12	0.20	0.20	0.22	0.31	0.31	0.19	0.25	0.25	0.16	0.23	0.23
Volume/Cap:	0.27	0.64	0.64	0.64	0.60	0.60	0.64	0.42	0.42	0.24	0.63	0.64
Delay/Veh:	41.0	38.6	38.6	38.8	30.5	30.5	41.4	31.6	31.6	36.7	36.4	36.8
User DelAdj:	1.00	1.00	1.00	1.00	1.00	1.00	1.00	1.00	1.00	1.00	1.00	1.00
AdjDel/Veh:	41.0	38.6	38.6	38.8	30.5	30.5	41.4	31.6	31.6	36.7	36.4	36.8
LOS by Move:	D	D	D	D	C	C	D	C	C	D	D	D
HCM2kAvgQ:	2	8	8	8	9	9	7	5	5	2	8	8

Note: Queue reported is the number of cars per lane.

Traffix 7.9.0215 (c) 2008 Dowling Assoc. Licensed to MMA, LONG BEACH, CA

Overlook Parkway Extension
Existing
PM Peak Hour

Level Of Service Computation Report
2000 HCM Operations Method (Future Volume Alternative)

Intersection #4 Madison St/Lincoln Ave

Cycle (sec): 100 Critical Vol./Cap.(X): 0.373
Loss Time (sec): 16 (Y+R=4.0 sec) Average Delay (sec/veh): 29.9
Optimal Cycle: 50 Level Of Service: C

Street Name:	Madison St						Lincoln Ave					
Approach:	North Bound			South Bound			East Bound			West Bound		
Movement:	L -	T -	R	L -	T -	R	L -	T -	R	L -	T -	R
Control:	Protected			Protected			Protected			Protected		
Rights:	Include			Include			Include			Include		
Min. Green:	7	7	7	7	7	7	7	7	7	7	7	7
Lanes:	1 0	0 1	0	1 0	0 1	0	1 0	0 1	0	1 0	1 1	0
Volume Module:												
Base Vol:	12	113	10	105	266	75	94	203	12	12	168	107
Growth Adj:	1.00	1.00	1.00	1.00	1.00	1.00	1.00	1.00	1.00	1.00	1.00	1.00
Initial Bse:	12	113	10	105	266	75	94	203	12	12	168	107
Added Vol:	0	0	0	0	0	0	0	0	0	0	0	0
PasserByVol:	0	0	0	0	0	0	0	0	0	0	0	0
Initial Fut:	12	113	10	105	266	75	94	203	12	12	168	107
User Adj:	1.00	1.00	1.00	1.00	1.00	1.00	1.00	1.00	1.00	1.00	1.00	1.00
PHF Adj:	1.00	1.00	1.00	1.00	1.00	1.00	1.00	1.00	1.00	1.00	1.00	1.00
PHF Volume:	12	113	10	105	266	75	94	203	12	12	168	107
Reduct Vol:	0	0	0	0	0	0	0	0	0	0	0	0
Reduced Vol:	12	113	10	105	266	75	94	203	12	12	168	107
PCE Adj:	1.00	1.00	1.00	1.00	1.00	1.00	1.00	1.00	1.00	1.00	1.00	1.00
MLF Adj:	1.00	1.00	1.00	1.00	1.00	1.00	1.00	1.00	1.00	1.00	1.00	1.00
FinalVolume:	12	113	10	105	266	75	94	203	12	12	168	107
Saturation Flow Module:												
Sat/Lane:	1900	1900	1900	1900	1900	1900	1900	1900	1900	1900	1900	1900
Adjustment:	0.95	0.99	0.99	0.95	0.97	0.97	0.95	0.99	0.99	0.95	0.89	0.89
Lanes:	1.00	0.92	0.08	1.00	0.78	0.22	1.00	0.94	0.06	1.00	1.22	0.78
Final Sat.:	1805	1725	153	1805	1433	404	1805	1780	105	1805	2077	1323
Capacity Analysis Module:												
Vol/Sat:	0.01	0.07	0.07	0.06	0.19	0.19	0.05	0.11	0.11	0.01	0.08	0.08
Crit Moves:	****				****			****		****		
Green/Cycle:	0.07	0.25	0.25	0.25	0.43	0.43	0.16	0.27	0.27	0.07	0.18	0.18
Volume/Cap:	0.09	0.26	0.26	0.23	0.43	0.43	0.33	0.43	0.43	0.09	0.45	0.45
Delay/Veh:	43.9	30.2	30.2	30.0	20.1	20.1	38.3	31.0	31.0	43.9	37.1	37.1
User DelAdj:	1.00	1.00	1.00	1.00	1.00	1.00	1.00	1.00	1.00	1.00	1.00	1.00
AdjDel/Veh:	43.9	30.2	30.2	30.0	20.1	20.1	38.3	31.0	31.0	43.9	37.1	37.1
LOS by Move:	D	C	C	C	C	C	D	C	C	D	D	D
HCM2kAvgQ:	0	3	3	3	7	7	3	6	6	0	4	4

Note: Queue reported is the number of cars per lane.

Traffix 7.9.0215 (c) 2008 Dowling Assoc. Licensed to MMA, LONG BEACH, CA

Overlook Parkway Extension
Existing
PM Peak Hour

Level Of Service Computation Report
2000 HCM Operations Method (Future Volume Alternative)

Intersection #6 Washington St/Indiana Ave

Cycle (sec): 100 Critical Vol./Cap.(X): 0.441
Loss Time (sec): 12 (Y+R=4.0 sec) Average Delay (sec/veh): 23.5
Optimal Cycle: 50 Level Of Service: C

Street Name:	Washington St						Indiana Ave					
Approach:	North Bound			South Bound			East Bound			West Bound		
Movement:	L -	T -	R	L -	T -	R	L -	T -	R	L -	T -	R
Control:	Permitted			Permitted			Protected			Protected		
Rights:	Ovl			Include			Include			Include		
Min. Green:	7	7	7	7	7	7	7	7	7	7	7	7
Lanes:	1 0	0 1	0	1 0	0 1	0	1 0	1 1	0	1 0	1 1	0
Volume Module:												
Base Vol:	168	2	138	13	4	15	2	472	147	168	478	1
Growth Adj:	1.00	1.00	1.00	1.00	1.00	1.00	1.00	1.00	1.00	1.00	1.00	1.00
Initial Bse:	168	2	138	13	4	15	2	472	147	168	478	1
Added Vol:	0	0	0	0	0	0	0	0	0	0	0	0
PasserByVol:	0	0	0	0	0	0	0	0	0	0	0	0
Initial Fut:	168	2	138	13	4	15	2	472	147	168	478	1
User Adj:	1.00	1.00	1.00	1.00	1.00	1.00	1.00	1.00	1.00	1.00	1.00	1.00
PHF Adj:	1.00	1.00	1.00	1.00	1.00	1.00	1.00	1.00	1.00	1.00	1.00	1.00
PHF Volume:	168	2	138	13	4	15	2	472	147	168	478	1
Reduct Vol:	0	0	0	0	0	0	0	0	0	0	0	0
Reduced Vol:	168	2	138	13	4	15	2	472	147	168	478	1
PCE Adj:	1.00	1.00	1.00	1.00	1.00	1.00	1.00	1.00	1.00	1.00	1.00	1.00
MLF Adj:	1.00	1.00	1.00	1.00	1.00	1.00	1.00	1.00	1.00	1.00	1.00	1.00
FinalVolume:	168	2	138	13	4	15	2	472	147	168	478	1
Saturation Flow Module:												
Sat/Lane:	1900	1900	1900	1900	1900	1900	1900	1900	1900	1900	1900	1900
Adjustment:	0.75	0.85	0.85	0.61	0.88	0.88	0.95	0.92	0.92	0.95	0.95	0.95
Lanes:	1.00	0.01	0.99	1.00	0.21	0.79	1.00	1.53	0.47	1.00	1.99	0.01
Final Sat.:	1431	23	1596	1155	353	1323	1805	2654	826	1805	3602	8
Capacity Analysis Module:												
Vol/Sat:	0.12	0.09	0.09	0.01	0.01	0.01	0.00	0.18	0.18	0.09	0.13	0.13
Crit Moves:	****							****		****		
Green/Cycle:	0.27	0.27	0.48	0.27	0.27	0.27	0.21	0.40	0.40	0.21	0.40	0.40
Volume/Cap:	0.44	0.33	0.18	0.04	0.04	0.04	0.01	0.44	0.44	0.44	0.33	0.33
Delay/Veh:	31.3	29.9	15.1	27.3	27.3	27.3	31.1	21.9	21.9	35.1	20.8	20.8
User DelAdj:	1.00	1.00	1.00	1.00	1.00	1.00	1.00	1.00	1.00	1.00	1.00	1.00
AdjDel/Veh:	31.3	29.9	15.1	27.3	27.3	27.3	31.1	21.9	21.9	35.1	20.8	20.8
LOS by Move:	C	C	B	C	C	C	C	C	C	D	C	C
HCM2kAvgQ:	5	4	2	0	0	0	0	7	7	5	5	5

Note: Queue reported is the number of cars per lane.

Traffix 7.9.0215 (c) 2008 Dowling Assoc. Licensed to MMA, LONG BEACH, CA

Overlook Parkway Extension
Existing
PM Peak Hour

Level Of Service Computation Report
2000 HCM 4-Way Stop Method (Future Volume Alternative)

Intersection #7 Washington St/Lincoln Ave

Cycle (sec):	100	Critical Vol./Cap.(X):	0.594
Loss Time (sec):	0 (Y+R=4.0 sec)	Average Delay (sec/veh):	15.3
Optimal Cycle:	0	Level Of Service:	C

Street Name:	Washington St					Lincoln Ave					
Approach:	North Bound			South Bound			East Bound			West Bound		
Movement:	L -	T -	R	L -	T -	R	L -	T -	R	L -	T -	R
Control:	Stop Sign			Stop Sign			Stop Sign			Stop Sign		
Rights:	Include			Include			Include			Include		
Min. Green:	7	7	7	7	7	7	7	7	7	7	7	7
Lanes:	0 0	1! 0	0	0 0	1! 0	0	0 0	1! 0	0	0 1	0 0	1
Volume Module:												
Base Vol:	22	210	13	60	244	22	14	272	22	32	201	60
Growth Adj:	1.00	1.00	1.00	1.00	1.00	1.00	1.00	1.00	1.00	1.00	1.00	1.00
Initial Bse:	22	210	13	60	244	22	14	272	22	32	201	60
Added Vol:	0	0	0	0	0	0	0	0	0	0	0	0
PasserByVol:	0	0	0	0	0	0	0	0	0	0	0	0
Initial Fut:	22	210	13	60	244	22	14	272	22	32	201	60
User Adj:	1.00	1.00	1.00	1.00	1.00	1.00	1.00	1.00	1.00	1.00	1.00	1.00
PHF Adj:	1.00	1.00	1.00	1.00	1.00	1.00	1.00	1.00	1.00	1.00	1.00	1.00
PHF Volume:	22	210	13	60	244	22	14	272	22	32	201	60
Reduct Vol:	0	0	0	0	0	0	0	0	0	0	0	0
Reduced Vol:	22	210	13	60	244	22	14	272	22	32	201	60
PCE Adj:	1.00	1.00	1.00	1.00	1.00	1.00	1.00	1.00	1.00	1.00	1.00	1.00
MLF Adj:	1.00	1.00	1.00	1.00	1.00	1.00	1.00	1.00	1.00	1.00	1.00	1.00
FinalVolume:	22	210	13	60	244	22	14	272	22	32	201	60
Saturation Flow Module:												
Adjustment:	1.00	1.00	1.00	1.00	1.00	1.00	1.00	1.00	1.00	1.00	1.00	1.00
Lanes:	0.09	0.86	0.05	0.18	0.75	0.07	0.05	0.88	0.07	0.14	0.86	1.00
Final Sat.:	47	447	28	101	411	37	25	476	39	68	426	552
Capacity Analysis Module:												
Vol/Sat:	0.47	0.47	0.47	0.59	0.59	0.59	0.57	0.57	0.57	0.47	0.47	0.11
Crit Moves:	****			****			****			****		
Delay/Veh:	14.1	14.1	14.1	16.8	16.8	16.8	16.3	16.3	16.3	14.8	14.8	9.4
Delay Adj:	1.00	1.00	1.00	1.00	1.00	1.00	1.00	1.00	1.00	1.00	1.00	1.00
AdjDel/Veh:	14.1	14.1	14.1	16.8	16.8	16.8	16.3	16.3	16.3	14.8	14.8	9.4
LOS by Move:	B	B	B	C	C	C	C	C	C	B	B	A
ApproachDel:	14.1			16.8			16.3			13.7		
Delay Adj:	1.00			1.00			1.00			1.00		
ApprAdjDel:	14.1			16.8			16.3			13.7		
LOS by Appr:	B			C			C			B		
AllWayAvgQ:	0.7	0.7	0.7	1.2	1.2	1.2	1.1	1.1	1.1	0.7	0.7	0.1

Overlook Parkway Extension
Existing
PM Peak Hour

Note: Queue reported is the number of cars per lane.

Overlook Parkway Extension
Existing
PM Peak Hour

Level Of Service Computation Report
2000 HCM Operations Method (Future Volume Alternative)

Intersection #9 Washington St/Overlook Pkwy

Cycle (sec): 100 Critical Vol./Cap.(X): 0.227
Loss Time (sec): 12 (Y+R=4.0 sec) Average Delay (sec/veh): 11.1
Optimal Cycle: 50 Level Of Service: B

Street Name:	Washington St						Overlook Pkwy					
Approach:	North Bound			South Bound			East Bound			West Bound		
Movement:	L	T	R	L	T	R	L	T	R	L	T	R
Control:	Protected			Protected			Protected			Protected		
Rights:	Include			Include			Include			Ovl		
Min. Green:	7	7	7	7	7	7	7	7	7	7	7	7
Lanes:	0 0	1 1	0	1 0	2 0	0	0 0	0 0	0	1 0	0 0	1
Volume Module:												
Base Vol:	0	405	20	130	688	0	0	0	0	16	0	99
Growth Adj:	1.00	1.00	1.00	1.00	1.00	1.00	1.00	1.00	1.00	1.00	1.00	1.00
Initial Bse:	0	405	20	130	688	0	0	0	0	16	0	99
Added Vol:	0	0	0	0	0	0	0	0	0	0	0	0
PasserByVol:	0	0	0	0	0	0	0	0	0	0	0	0
Initial Fut:	0	405	20	130	688	0	0	0	0	16	0	99
User Adj:	1.00	1.00	1.00	1.00	1.00	1.00	1.00	1.00	1.00	1.00	1.00	1.00
PHF Adj:	1.00	1.00	1.00	1.00	1.00	1.00	1.00	1.00	1.00	1.00	1.00	1.00
PHF Volume:	0	405	20	130	688	0	0	0	0	16	0	99
Reduct Vol:	0	0	0	0	0	0	0	0	0	0	0	0
Reduced Vol:	0	405	20	130	688	0	0	0	0	16	0	99
PCE Adj:	1.00	1.00	1.00	1.00	1.00	1.00	1.00	1.00	1.00	1.00	1.00	1.00
MLF Adj:	1.00	1.00	1.00	1.00	1.00	1.00	1.00	1.00	1.00	1.00	1.00	1.00
FinalVolume:	0	405	20	130	688	0	0	0	0	16	0	99
Saturation Flow Module:												
Sat/Lane:	1900	1900	1900	1900	1900	1900	1900	1900	1900	1900	1900	1900
Adjustment:	1.00	0.94	0.94	0.95	0.95	1.00	1.00	1.00	1.00	0.95	1.00	0.85
Lanes:	0.00	1.91	0.09	1.00	2.00	0.00	0.00	0.00	0.00	1.00	0.00	1.00
Final Sat.:	0	3416	169	1805	3610	0	0	0	0	1805	0	1615
Capacity Analysis Module:												
Vol/Sat:	0.00	0.12	0.12	0.07	0.19	0.00	0.00	0.00	0.00	0.01	0.00	0.06
Crit Moves:	****				****					****		
Green/Cycle:	0.00	0.50	0.50	0.31	0.74	0.00	0.00	0.00	0.00	0.07	0.00	0.38
Volume/Cap:	0.00	0.24	0.24	0.24	0.26	0.00	0.00	0.00	0.00	0.13	0.00	0.16
Delay/Veh:	0.0	14.0	14.0	26.2	4.2	0.0	0.0	0.0	0.0	44.1	0.0	20.9
User DelAdj:	1.00	1.00	1.00	1.00	1.00	1.00	1.00	1.00	1.00	1.00	1.00	1.00
AdjDel/Veh:	0.0	14.0	14.0	26.2	4.2	0.0	0.0	0.0	0.0	44.1	0.0	20.9
LOS by Move:	A	B	B	C	A	A	A	A	A	D	A	C
HCM2kAvgQ:	0	4	4	3	4	0	0	0	0	1	0	2

Note: Queue reported is the number of cars per lane.

Traffix 7.9.0215 (c) 2008 Dowling Assoc. Licensed to MMA, LONG BEACH, CA

Overlook Parkway Extension
Existing
PM Peak Hour

Level Of Service Computation Report
2000 HCM Operations Method (Future Volume Alternative)

Intersection #10 Riverside Ave-SR-91 WB/Arlington Ave

Cycle (sec): 100 Critical Vol./Cap.(X): 0.764
Loss Time (sec): 12 (Y+R=4.0 sec) Average Delay (sec/veh): 31.6
Optimal Cycle: 70 Level Of Service: C

Street Name:	Riverside Ave-SR-91 WB						Arlington Ave					
Approach:	North Bound			South Bound			East Bound			West Bound		
Movement:	L	T	R	L	T	R	L	T	R	L	T	R
Control:	Protected			Protected			Protected			Protected		
Rights:	Include			Ovl			Ignore			Ignore		
Min. Green:	7	7	7	7	7	7	7	7	7	7	7	7
Lanes:	0 0	0 0	0	1 1	0 0	1	1 0	3 0	1	1 0	2 0	1
Volume Module:												
Base Vol:	0	0	0	650	86	351	47	1052	189	463	636	219
Growth Adj:	1.00	1.00	1.00	1.00	1.00	1.00	1.00	1.00	1.00	1.00	1.00	1.00
Initial Bse:	0	0	0	650	86	351	47	1052	189	463	636	219
Added Vol:	0	0	0	0	0	0	0	0	0	0	0	0
PasserByVol:	0	0	0	0	0	0	0	0	0	0	0	0
Initial Fut:	0	0	0	650	86	351	47	1052	189	463	636	219
User Adj:	1.00	1.00	1.00	1.00	1.00	1.00	1.00	1.00	0.00	1.00	1.00	0.00
PHF Adj:	1.00	1.00	1.00	1.00	1.00	1.00	1.00	1.00	0.00	1.00	1.00	0.00
PHF Volume:	0	0	0	650	86	351	47	1052	0	463	636	0
Reduct Vol:	0	0	0	0	0	0	0	0	0	0	0	0
Reduced Vol:	0	0	0	650	86	351	47	1052	0	463	636	0
PCE Adj:	1.00	1.00	1.00	1.00	1.00	1.00	1.00	1.00	0.00	1.00	1.00	0.00
MLF Adj:	1.00	1.00	1.00	1.00	1.00	1.00	1.00	1.00	0.00	1.00	1.00	0.00
FinalVolume:	0	0	0	650	86	351	47	1052	0	463	636	0
Saturation Flow Module:												
Sat/Lane:	1900	1900	1900	1900	1900	1900	1900	1900	1900	1900	1900	1900
Adjustment:	1.00	1.00	1.00	0.91	0.91	0.85	0.95	0.91	1.00	0.95	0.95	1.00
Lanes:	0.00	0.00	0.00	1.77	0.23	1.00	1.00	3.00	1.00	1.00	2.00	1.00
Final Sat.:	0	0	0	3054	404	1615	1805	5187	1900	1805	3610	1900
Capacity Analysis Module:												
Vol/Sat:	0.00	0.00	0.00	0.21	0.21	0.22	0.03	0.20	0.00	0.26	0.18	0.00
Crit Moves:				****				****		****		
Green/Cycle:	0.00	0.00	0.00	0.28	0.26	0.43	0.17	0.27	0.00	0.34	0.43	0.00
Volume/Cap:	0.00	0.00	0.00	0.76	0.81	0.50	0.15	0.76	0.00	0.76	0.41	0.00
Delay/Veh:	0.0	0.0	0.0	36.7	40.1	21.1	35.5	36.4	0.0	35.4	19.9	0.0
User DelAdj:	1.00	1.00	1.00	1.00	1.00	1.00	1.00	1.00	1.00	1.00	1.00	1.00
AdjDel/Veh:	0.0	0.0	0.0	36.7	40.1	21.1	35.5	36.4	0.0	35.4	19.9	0.0
LOS by Move:	A	A	A	D	D	C	D	D	A	D	B	A
HCM2kAvgQ:	0	0	0	12	13	8	1	13	0	14	7	0

Note: Queue reported is the number of cars per lane.

Traffix 7.9.0215 (c) 2008 Dowling Assoc. Licensed to MMA, LONG BEACH, CA

Overlook Parkway Extension
Existing
PM Peak Hour

Level Of Service Computation Report
2000 HCM Operations Method (Future Volume Alternative)

Intersection #11 Indiana Ave-SR-91 EB/Arlington Ave

Cycle (sec):	100	Critical Vol./Cap.(X):	0.648
Loss Time (sec):	12 (Y+R=4.0 sec)	Average Delay (sec/veh):	27.7
Optimal Cycle:	53	Level Of Service:	C

Street Name:	Indiana Ave-SR-91 EB						Arlington Ave					
Approach:	North Bound			South Bound			East Bound			West Bound		
Movement:	L -	T -	R	L -	T -	R	L -	T -	R	L -	T -	R
Control:	Protected			Protected			Protected			Protected		
Rights:	Ovl			Include			Ovl			Ignore		
Min. Green:	7	7	7	7	7	7	7	7	7	7	7	7
Lanes:	1 1	1 0	1	0 0	0 0	0	1 0	2 0	1	1 0	4 0	1
Volume Module:												
Base Vol:	173	303	466	0	0	0	335	1018	218	150	1078	230
Growth Adj:	1.00	1.00	1.00	1.00	1.00	1.00	1.00	1.00	1.00	1.00	1.00	1.00
Initial Bse:	173	303	466	0	0	0	335	1018	218	150	1078	230
Added Vol:	0	0	0	0	0	0	0	0	0	0	0	0
PasserByVol:	0	0	0	0	0	0	0	0	0	0	0	0
Initial Fut:	173	303	466	0	0	0	335	1018	218	150	1078	230
User Adj:	1.00	1.00	1.00	1.00	1.00	1.00	1.00	1.00	1.00	1.00	1.00	0.00
PHF Adj:	1.00	1.00	1.00	1.00	1.00	1.00	1.00	1.00	1.00	1.00	1.00	0.00
PHF Volume:	173	303	466	0	0	0	335	1018	218	150	1078	0
Reduct Vol:	0	0	0	0	0	0	0	0	0	0	0	0
Reduced Vol:	173	303	466	0	0	0	335	1018	218	150	1078	0
PCE Adj:	1.00	1.00	1.00	1.00	1.00	1.00	1.00	1.00	1.00	1.00	1.00	0.00
MLF Adj:	1.00	1.00	1.00	1.00	1.00	1.00	1.00	1.00	1.00	1.00	1.00	0.00
FinalVolume:	173	303	466	0	0	0	335	1018	218	150	1078	0
Saturation Flow Module:												
Sat/Lane:	1900	1900	1900	1900	1900	1900	1900	1900	1900	1900	1900	1900
Adjustment:	0.92	0.92	0.85	1.00	1.00	1.00	0.95	0.95	0.85	0.95	0.91	1.00
Lanes:	1.09	1.91	1.00	0.00	0.00	0.00	1.00	2.00	1.00	1.00	4.00	1.00
Final Sat.:	1913	3350	1615	0	0	0	1805	3610	1615	1805	6916	1900
Capacity Analysis Module:												
Vol/Sat:	0.09	0.09	0.29	0.00	0.00	0.00	0.19	0.28	0.13	0.08	0.16	0.00
Crit Moves:			****					****		****		
Green/Cycle:	0.22	0.32	0.45	0.00	0.00	0.00	0.31	0.43	0.65	0.13	0.26	0.00
Volume/Cap:	0.41	0.29	0.65	0.00	0.00	0.00	0.61	0.65	0.21	0.65	0.61	0.00
Delay/Veh:	33.9	25.7	23.7	0.0	0.0	0.0	31.5	23.2	7.1	47.8	33.3	0.0
User DelAdj:	1.00	1.00	1.00	1.00	1.00	1.00	1.00	1.00	1.00	1.00	1.00	1.00
AdjDel/Veh:	33.9	25.7	23.7	0.0	0.0	0.0	31.5	23.2	7.1	47.8	33.3	0.0
LOS by Move:	C	C	C	A	A	A	C	C	A	D	C	A
HCM2kAvgQ:	5	4	12	0	0	0	9	13	3	6	9	0

Note: Queue reported is the number of cars per lane.

Traffix 7.9.0215 (c) 2008 Dowling Assoc. Licensed to MMA, LONG BEACH, CA

Overlook Parkway Extension
Existing
PM Peak Hour

Level Of Service Computation Report
2000 HCM Operations Method (Future Volume Alternative)

Intersection #12 Victoria Ave/Arlington Ave

Cycle (sec):	100	Critical Vol./Cap.(X):	0.828
Loss Time (sec):	16 (Y+R=4.0 sec)	Average Delay (sec/veh):	36.3
Optimal Cycle:	93	Level Of Service:	D

Street Name:	Victoria Ave						Arlington Ave					
Approach:	North Bound			South Bound			East Bound			West Bound		
Movement:	L -	T -	R	L -	T -	R	L -	T -	R	L -	T -	R
Control:	Protected			Protected			Protected			Protected		
Rights:	Ovl			Include			Include			Include		
Min. Green:	7	7	7	7	7	7	7	7	7	7	7	7
Lanes:	1 0	1 0	1	1 0	1 0	1	1 0	1 1	0	1 0	1 1	0
Volume Module:												
Base Vol:	21	156	417	72	245	68	58	1311	19	336	931	27
Growth Adj:	1.00	1.00	1.00	1.00	1.00	1.00	1.00	1.00	1.00	1.00	1.00	1.00
Initial Bse:	21	156	417	72	245	68	58	1311	19	336	931	27
Added Vol:	0	0	0	0	0	0	0	0	0	0	0	0
PasserByVol:	0	0	0	0	0	0	0	0	0	0	0	0
Initial Fut:	21	156	417	72	245	68	58	1311	19	336	931	27
User Adj:	1.00	1.00	1.00	1.00	1.00	1.00	1.00	1.00	1.00	1.00	1.00	1.00
PHF Adj:	1.00	1.00	1.00	1.00	1.00	1.00	1.00	1.00	1.00	1.00	1.00	1.00
PHF Volume:	21	156	417	72	245	68	58	1311	19	336	931	27
Reduct Vol:	0	0	0	0	0	0	0	0	0	0	0	0
Reduced Vol:	21	156	417	72	245	68	58	1311	19	336	931	27
PCE Adj:	1.00	1.00	1.00	1.00	1.00	1.00	1.00	1.00	1.00	1.00	1.00	1.00
MLF Adj:	1.00	1.00	1.00	1.00	1.00	1.00	1.00	1.00	1.00	1.00	1.00	1.00
FinalVolume:	21	156	417	72	245	68	58	1311	19	336	931	27
Saturation Flow Module:												
Sat/Lane:	1900	1900	1900	1900	1900	1900	1900	1900	1900	1900	1900	1900
Adjustment:	0.95	1.00	0.85	0.95	1.00	0.85	0.95	0.95	0.95	0.95	0.95	0.95
Lanes:	1.00	1.00	1.00	1.00	1.00	1.00	1.00	1.97	0.03	1.00	1.94	0.06
Final Sat.:	1805	1900	1615	1805	1900	1615	1805	3551	51	1805	3494	101
Capacity Analysis Module:												
Vol/Sat:	0.01	0.08	0.26	0.04	0.13	0.04	0.03	0.37	0.37	0.19	0.27	0.27
Crit Moves:	****				****			****		****		
Green/Cycle:	0.07	0.12	0.33	0.10	0.15	0.15	0.13	0.42	0.42	0.21	0.49	0.49
Volume/Cap:	0.17	0.71	0.79	0.40	0.89	0.29	0.25	0.89	0.89	0.89	0.54	0.54
Delay/Veh:	44.4	52.6	38.7	43.8	69.6	38.8	39.7	34.0	34.0	60.2	17.7	17.7
User DelAdj:	1.00	1.00	1.00	1.00	1.00	1.00	1.00	1.00	1.00	1.00	1.00	1.00
AdjDel/Veh:	44.4	52.6	38.7	43.8	69.6	38.8	39.7	34.0	34.0	60.2	17.7	17.7
LOS by Move:	D	D	D	D	E	D	D	C	C	E	B	B
HCM2kAvgQ:	1	6	14	3	11	2	2	23	23	13	11	11

Note: Queue reported is the number of cars per lane.

Traffix 7.9.0215 (c) 2008 Dowling Assoc. Licensed to MMA, LONG BEACH, CA

Overlook Parkway Extension
Existing
PM Peak Hour

Level Of Service Computation Report
2000 HCM Operations Method (Future Volume Alternative)

Intersection #13 Alessandro Blvd/Arlington Ave

Cycle (sec): 100 Critical Vol./Cap.(X): 0.918
Loss Time (sec): 16 (Y+R=4.0 sec) Average Delay (sec/veh): 41.0
Optimal Cycle: 124 Level Of Service: D

Street Name:	Alessandro Blvd						Arlington Ave					
Approach:	North Bound			South Bound			East Bound			West Bound		
Movement:	L - T - R			L - T - R			L - T - R			L - T - R		
Control:	Protected			Protected			Protected			Protected		
Rights:	Ovl			Include			Ovl			Ovl		
Min. Green:	7	7	7	7	7	7	7	7	7	7	7	7
Lanes:	2 0	2 0	1	2 0	2 1	0	1 0	2 0	2	2 0	2 0	1
Volume Module:												
Base Vol:	653	659	147	350	1336	22	30	568	1113	411	603	249
Growth Adj:	1.00	1.00	1.00	1.00	1.00	1.00	1.00	1.00	1.00	1.00	1.00	1.00
Initial Bse:	653	659	147	350	1336	22	30	568	1113	411	603	249
Added Vol:	0	0	0	0	0	0	0	0	0	0	0	0
PasserByVol:	0	0	0	0	0	0	0	0	0	0	0	0
Initial Fut:	653	659	147	350	1336	22	30	568	1113	411	603	249
User Adj:	1.00	1.00	1.00	1.00	1.00	1.00	1.00	1.00	1.00	1.00	1.00	1.00
PHF Adj:	1.00	1.00	1.00	1.00	1.00	1.00	1.00	1.00	1.00	1.00	1.00	1.00
PHF Volume:	653	659	147	350	1336	22	30	568	1113	411	603	249
Reduct Vol:	0	0	0	0	0	0	0	0	0	0	0	0
Reduced Vol:	653	659	147	350	1336	22	30	568	1113	411	603	249
PCE Adj:	1.00	1.00	1.00	1.00	1.00	1.00	1.00	1.00	1.00	1.00	1.00	1.00
MLF Adj:	1.00	1.00	1.00	1.00	1.00	1.00	1.00	1.00	1.00	1.00	1.00	1.00
FinalVolume:	653	659	147	350	1336	22	30	568	1113	411	603	249
Saturation Flow Module:												
Sat/Lane:	1900	1900	1900	1900	1900	1900	1900	1900	1900	1900	1900	1900
Adjustment:	0.92	0.95	0.85	0.92	0.91	0.91	0.95	0.95	0.75	0.92	0.95	0.85
Lanes:	2.00	2.00	1.00	2.00	2.95	0.05	1.00	2.00	2.00	2.00	2.00	1.00
Final Sat.:	3502	3610	1615	3502	5093	84	1805	3610	2842	3502	3610	1615
Capacity Analysis Module:												
Vol/Sat:	0.19	0.18	0.09	0.10	0.26	0.26	0.02	0.16	0.39	0.12	0.17	0.15
Crit Moves:	****				****				****	****		
Green/Cycle:	0.20	0.32	0.44	0.17	0.29	0.29	0.10	0.22	0.43	0.13	0.25	0.42
Volume/Cap:	0.92	0.58	0.21	0.58	0.92	0.92	0.16	0.70	0.92	0.92	0.67	0.37
Delay/Veh:	55.9	29.4	17.2	39.4	44.0	44.0	41.2	38.6	38.2	66.9	36.1	20.2
User DelAdj:	1.00	1.00	1.00	1.00	1.00	1.00	1.00	1.00	1.00	1.00	1.00	1.00
AdjDel/Veh:	55.9	29.4	17.2	39.4	44.0	44.0	41.2	38.6	38.2	66.9	36.1	20.2
LOS by Move:	E	C	B	D	D	D	D	D	D	E	D	C
HCM2kAvgQ:	14	9	3	6	19	19	1	10	23	10	10	5

Note: Queue reported is the number of cars per lane.

Traffix 7.9.0215 (c) 2008 Dowling Assoc. Licensed to MMA, LONG BEACH, CA

Overlook Parkway Extension
Existing
PM Peak Hour

Level Of Service Computation Report
2000 HCM Operations Method (Future Volume Alternative)

Intersection #14 Alessandro Blvd/Overlook Pkwy

Cycle (sec): 100 Critical Vol./Cap.(X): 0.734
Loss Time (sec): 16 (Y+R=4.0 sec) Average Delay (sec/veh): 24.8
Optimal Cycle: 74 Level Of Service: C

Street Name:	Alessandro Blvd						Overlook Pkwy					
Approach:	North Bound			South Bound			East Bound			West Bound		
Movement:	L - T - R			L - T - R			L - T - R			L - T - R		
Control:	Protected			Protected			Protected			Protected		
Rights:	Include			Include			Include			Include		
Min. Green:	7	7	7	7	7	7	7	7	7	7	7	7
Lanes:	1 0	3 0	1	1 0	2 1	0	1 0	1 1	0	3 0	0 1	0
Volume Module:												
Base Vol:	4	1295	405	79	2547	12	16	7	4	617	11	36
Growth Adj:	1.00	1.00	1.00	1.00	1.00	1.00	1.00	1.00	1.00	1.00	1.00	1.00
Initial Bse:	4	1295	405	79	2547	12	16	7	4	617	11	36
Added Vol:	0	0	0	0	0	0	0	0	0	0	0	0
PasserByVol:	0	0	0	0	0	0	0	0	0	0	0	0
Initial Fut:	4	1295	405	79	2547	12	16	7	4	617	11	36
User Adj:	1.00	1.00	1.00	1.00	1.00	1.00	1.00	1.00	1.00	1.00	1.00	1.00
PHF Adj:	1.00	1.00	1.00	1.00	1.00	1.00	1.00	1.00	1.00	1.00	1.00	1.00
PHF Volume:	4	1295	405	79	2547	12	16	7	4	617	11	36
Reduct Vol:	0	0	0	0	0	0	0	0	0	0	0	0
Reduced Vol:	4	1295	405	79	2547	12	16	7	4	617	11	36
PCE Adj:	1.00	1.00	1.00	1.00	1.00	1.00	1.00	1.00	1.00	1.00	1.00	1.00
MLF Adj:	1.00	1.00	1.00	1.00	1.00	1.00	1.00	1.00	1.00	1.00	1.00	1.00
FinalVolume:	4	1295	405	79	2547	12	16	7	4	617	11	36
Saturation Flow Module:												
Sat/Lane:	1900	1900	1900	1900	1900	1900	1900	1900	1900	1900	1900	1900
Adjustment:	0.95	0.91	0.85	0.95	0.91	0.91	0.95	0.90	0.90	0.92	0.89	0.89
Lanes:	1.00	3.00	1.00	1.00	2.99	0.01	1.00	1.27	0.73	3.00	0.23	0.77
Final Sat.:	1805	5187	1615	1805	5158	24	1805	2171	1241	5253	394	1288
Capacity Analysis Module:												
Vol/Sat:	0.00	0.25	0.25	0.04	0.49	0.49	0.01	0.00	0.00	0.12	0.03	0.03
Crit Moves:	****				****			****		****		
Green/Cycle:	0.07	0.50	0.50	0.14	0.57	0.57	0.10	0.07	0.07	0.13	0.10	0.10
Volume/Cap:	0.03	0.50	0.50	0.32	0.87	0.87	0.09	0.05	0.05	0.87	0.27	0.27
Delay/Veh:	43.4	17.0	17.4	39.5	21.8	21.8	40.9	43.5	43.5	54.1	42.3	42.3
User DelAdj:	1.00	1.00	1.00	1.00	1.00	1.00	1.00	1.00	1.00	1.00	1.00	1.00
AdjDel/Veh:	43.4	17.0	17.4	39.5	21.8	21.8	40.9	43.5	43.5	54.1	42.3	42.3
LOS by Move:	D	B	B	D	C	C	D	D	D	D	D	D
HCM2kAvgQ:	0	10	9	2	28	28	0	0	0	9	2	2

Note: Queue reported is the number of cars per lane.

Traffix 7.9.0215 (c) 2008 Dowling Assoc. Licensed to MMA, LONG BEACH, CA

Overlook Parkway Extension
Existing
PM Peak Hour

Level Of Service Computation Report
2000 HCM Operations Method (Future Volume Alternative)

Intersection #15 Alessandro Blvd/Trautwein Rd

Cycle (sec): 100 Critical Vol./Cap.(X): 0.630
Loss Time (sec): 12 (Y+R=4.0 sec) Average Delay (sec/veh): 21.6
Optimal Cycle: 51 Level Of Service: C

Street Name:	Alessandro Blvd						Trautwein Rd					
Approach:	North Bound			South Bound			East Bound			West Bound		
Movement:	L	T	R	L	T	R	L	T	R	L	T	R
Control:	Protected			Protected			Protected			Protected		
Rights:	Include			Ignore			Ignore			Include		
Min. Green:	7	7	7	7	7	7	7	7	7	7	7	7
Lanes:	2 0	3 0	0	0 0	3 0	1	3 0	0 0	1	0 0	0 0	0
Volume Module:												
Base Vol:	275	1012	0	0	1817	1265	661	0	151	0	0	0
Growth Adj:	1.00	1.00	1.00	1.00	1.00	1.00	1.00	1.00	1.00	1.00	1.00	1.00
Initial Bse:	275	1012	0	0	1817	1265	661	0	151	0	0	0
Added Vol:	0	0	0	0	0	0	0	0	0	0	0	0
PasserByVol:	0	0	0	0	0	0	0	0	0	0	0	0
Initial Fut:	275	1012	0	0	1817	1265	661	0	151	0	0	0
User Adj:	1.00	1.00	1.00	1.00	1.00	0.00	1.00	1.00	0.00	1.00	1.00	1.00
PHF Adj:	1.00	1.00	1.00	1.00	1.00	0.00	1.00	1.00	0.00	1.00	1.00	1.00
PHF Volume:	275	1012	0	0	1817	0	661	0	0	0	0	0
Reduct Vol:	0	0	0	0	0	0	0	0	0	0	0	0
Reduced Vol:	275	1012	0	0	1817	0	661	0	0	0	0	0
PCE Adj:	1.00	1.00	1.00	1.00	1.00	0.00	1.00	1.00	0.00	1.00	1.00	1.00
MLF Adj:	1.00	1.00	1.00	1.00	1.00	0.00	1.00	1.00	0.00	1.00	1.00	1.00
FinalVolume:	275	1012	0	0	1817	0	661	0	0	0	0	0
Saturation Flow Module:												
Sat/Lane:	1900	1900	1900	1900	1900	1900	1900	1900	1900	1900	1900	1900
Adjustment:	0.92	0.91	1.00	1.00	0.91	1.00	0.92	1.00	1.00	1.00	1.00	1.00
Lanes:	2.00	3.00	0.00	0.00	3.00	1.00	3.00	0.00	1.00	0.00	0.00	0.00
Final Sat.:	3502	5187	0	0	5187	1900	5253	0	1900	0	0	0
Capacity Analysis Module:												
Vol/Sat:	0.08	0.20	0.00	0.00	0.35	0.00	0.13	0.00	0.00	0.00	0.00	0.00
Crit Moves:	****				****		****					
Green/Cycle:	0.12	0.50	0.00	0.00	0.56	0.00	0.20	0.00	0.00	0.00	0.00	0.00
Volume/Cap:	0.63	0.39	0.00	0.00	0.63	0.00	0.63	0.00	0.00	0.00	0.00	0.00
Delay/Veh:	44.5	15.6	0.0	0.0	15.6	0.0	37.9	0.0	0.0	0.0	0.0	0.0
User DelAdj:	1.00	1.00	1.00	1.00	1.00	1.00	1.00	1.00	1.00	1.00	1.00	1.00
AdjDel/Veh:	44.5	15.6	0.0	0.0	15.6	0.0	37.9	0.0	0.0	0.0	0.0	0.0
LOS by Move:	D	B	A	A	B	A	D	A	A	A	A	A
HCM2kAvgQ:	5	7	0	0	14	0	7	0	0	0	0	0

Note: Queue reported is the number of cars per lane.

Traffix 7.9.0215 (c) 2008 Dowling Assoc. Licensed to MMA, LONG BEACH, CA

Overlook Parkway Extension
Existing
PM Peak Hour

Level Of Service Computation Report
2000 HCM 4-Way Stop Method (Future Volume Alternative)

Intersection #16 Crystal View Ter/Overlook Pkwy

Cycle (sec): 100 Critical Vol./Cap.(X): 0.006
Loss Time (sec): 0 (Y+R=4.0 sec) Average Delay (sec/veh): 7.0
Optimal Cycle: 0 Level Of Service: A

Street Name:	Crystal View Ter						Overlook Pkwy					
Approach:	North Bound			South Bound			East Bound			West Bound		
Movement:	L	T	R	L	T	R	L	T	R	L	T	R
Control:	Stop Sign			Stop Sign			Stop Sign			Stop Sign		
Rights:	Include			Include			Include			Include		
Min. Green:	7	7	7	7	7	7	7	7	7	7	7	7
Lanes:	1 0	0 0	0	0 0	1! 0	0	1 0	0 1	0	1 0	0 1	0
Volume Module:												
Base Vol:	5	0	0	0	0	0	3	0	6	0	0	0
Growth Adj:	1.00	1.00	1.00	1.00	1.00	1.00	1.00	1.00	1.00	1.00	1.00	1.00
Initial Bse:	5	0	0	0	0	0	3	0	6	0	0	0
Added Vol:	0	0	0	0	0	0	0	0	0	0	0	0
PasserByVol:	0	0	0	0	0	0	0	0	0	0	0	0
Initial Fut:	5	0	0	0	0	0	3	0	6	0	0	0
User Adj:	1.00	1.00	1.00	1.00	1.00	1.00	1.00	1.00	1.00	1.00	1.00	1.00
PHF Adj:	1.00	1.00	1.00	1.00	1.00	1.00	1.00	1.00	1.00	1.00	1.00	1.00
PHF Volume:	5	0	0	0	0	0	3	0	6	0	0	0
Reduct Vol:	0	0	0	0	0	0	0	0	0	0	0	0
Reduced Vol:	5	0	0	0	0	0	3	0	6	0	0	0
PCE Adj:	1.00	1.00	1.00	1.00	1.00	1.00	1.00	1.00	1.00	1.00	1.00	1.00
MLF Adj:	1.00	1.00	1.00	1.00	1.00	1.00	1.00	1.00	1.00	1.00	1.00	1.00
FinalVolume:	5	0	0	0	0	0	3	0	6	0	0	0
Saturation Flow Module:												
Adjustment:	1.00	1.00	1.00	1.00	1.00	1.00	1.00	1.00	1.00	1.00	1.00	1.00
Lanes:	1.00	0.00	0.00	0.00	1.00	0.00	1.00	0.00	1.00	1.00	1.00	0.00
Final Sat.:	872	0	0	0	916	0	718	0	943	718	796	0
Capacity Analysis Module:												
Vol/Sat:	0.01	xxxx	xxxx	xxxx	0.00	xxxx	0.00	xxxx	0.01	0.00	0.00	xxxx
Crit Moves:	****				****				****		****	
Delay/Veh:	7.1	0.0	0.0	0.0	0.0	0.0	7.7	0.0	6.5	0.0	0.0	0.0
Delay Adj:	1.00	1.00	1.00	1.00	1.00	1.00	1.00	1.00	1.00	1.00	1.00	1.00
AdjDel/Veh:	7.1	0.0	0.0	0.0	0.0	0.0	7.7	0.0	6.5	0.0	0.0	0.0
LOS by Move:	A	*	*	*	*	*	A	*	A	*	*	*
ApproachDel:	7.1			xxxxxx			6.9			xxxxxx		
Delay Adj:	1.00			xxxxx			1.00			xxxxx		
ApprAdjDel:	7.1			xxxxxx			6.9			xxxxxx		
LOS by Appr:	A			*			A			*		
AllWayAvgQ:	0.0	0.0	0.0	0.0	0.0	0.0	0.0	0.0	0.0	0.0	0.0	0.0

Traffix 7.9.0215 (c) 2008 Dowling Assoc. Licensed to MMA, LONG BEACH, CA

Overlook Parkway Extension
Existing
PM Peak Hour

Note: Queue reported is the number of cars per lane.

Overlook Parkway Extension
Existing
PM Peak Hour

Level Of Service Computation Report
2000 HCM Unsignalized Method (Future Volume Alternative)

Intersection #17 Kingdom Dr/Overlook Pkwy

Average Delay (sec/veh): 3.0 Worst Case Level Of Service: A[8.7]

Street Name:	Kingdom Dr						Overlook Pkwy					
Approach:	North Bound			South Bound			East Bound			West Bound		
Movement:	L	T	R	L	T	R	L	T	R	L	T	R
Control:	Stop Sign			Stop Sign			Uncontrolled			Uncontrolled		
Rights:	Include			Include			Include			Include		
Lanes:	0 0 1!	0	0	0 0 1!	0	0	1 0 0	1	0	1 0 0	1	0
Volume Module:												
Base Vol:	15	0	3	0	0	0	1	10	18	0	7	0
Growth Adj:	1.00 1.00	1.00	1.00 1.00	1.00	1.00	1.00 1.00	1.00	1.00	1.00 1.00	1.00	1.00
Initial Bse:	15	0	3	0	0	0	1	10	18	0	7	0
Added Vol:	0	0	0	0	0	0	0	0	0	0	0	0
PasserByVol:	0	0	0	0	0	0	0	0	0	0	0	0
Initial Fut:	15	0	3	0	0	0	1	10	18	0	7	0
User Adj:	1.00 1.00	1.00	1.00 1.00	1.00	1.00	1.00 1.00	1.00	1.00	1.00 1.00	1.00	1.00
PHF Adj:	1.00 1.00	1.00	1.00 1.00	1.00	1.00	1.00 1.00	1.00	1.00	1.00 1.00	1.00	1.00
PHF Volume:	15	0	3	0	0	0	1	10	18	0	7	0
Reduct Vol:	0	0	0	0	0	0	0	0	0	0	0	0
FinalVolume:	15	0	3	0	0	0	1	10	18	0	7	0
Critical Gap Module:												
Critical Gp:	6.4	6.5	6.2	7.1	6.5	6.2	4.1	xxxx	xxxxx	xxxxx	xxxx	xxxxx
FollowUpTim:	3.5	4.0	3.3	3.5	4.0	3.3	2.2	xxxx	xxxxx	xxxxx	xxxx	xxxxx
Capacity Module:												
Cnflict Vol:	28	28	19	30	37	7	7	xxxx	xxxxx	xxxx	xxxx	xxxxx
Potent Cap.:	992	869	1065	984	859	1081	1627	xxxx	xxxxx	xxxx	xxxx	xxxxx
Move Cap.:	992	868	1065	981	859	1081	1627	xxxx	xxxxx	xxxx	xxxx	xxxxx
Volume/Cap:	0.02 0.00	0.00	0.00 0.00	0.00	0.00	0.00	xxxx	xxxx	xxxx	xxxx	xxxx
Level Of Service Module:												
2Way95thQ:	xxxx xxxx	xxxxx	xxxx xxxx	xxxxx	0.0	xxxx	xxxxx	xxxx	xxxx	xxxxx		
Control Del:	xxxxx xxxx	xxxxx	xxxxx xxxx	xxxxx	7.2	xxxx	xxxxx	xxxxx	xxxx	xxxxx		
LOS by Move:	* *	*	* *	*	A	*	*	*	*	*		
Movement:	LT - LTR	- RT	LT - LTR	- RT	LT - LTR	- RT	LT - LTR	- RT				
Shared Cap.:	xxxx 1003	xxxxx	xxxx 0	xxxxx	xxxx xxxx	xxxxx	xxxx xxxx	xxxxx				
SharedQueue:	xxxxx 0.1	xxxxx	xxxxx xxxx	xxxxx	xxxxx xxxx	xxxxx	xxxxx xxxx	xxxxx				
Shrd ConDel:	xxxxx 8.7	xxxxx	xxxxx xxxx	xxxxx	xxxxx xxxx	xxxxx	xxxxx xxxx	xxxxx				
Shared LOS:	* A	*	* *	*	* *	*	* *	*				
ApproachDel:	8.7	xxxxxx	xxxxxx	xxxxxx								
ApproachLOS:	A	*	*	*								

Note: Queue reported is the number of cars per lane.

Overlook Parkway Extension
Existing
PM Peak Hour

Level Of Service Computation Report
2000 HCM Unsignalized Method (Future Volume Alternative)

Intersection #18 Kingdom Dr/Green Orchard Pl

Average Delay (sec/veh): 3.5 Worst Case Level Of Service: A[8.4]

Street Name:	Kingdom Dr									Green Orchard Pl							
Approach:	North Bound					South Bound				East Bound					West Bound		
Movement:	L	-	T	-	R	L	-	T	-	R	L	-	T	-	R	L	-	T	-	R
Control:	Uncontrolled					Uncontrolled					Stop Sign					Stop Sign				
Rights:	Include					Include					Include					Include				
Lanes:	0	0	0	1	0	0	1	0	0	0	0	0	0	0	0	0	0	1!	0	0
Volume Module:																				
Base Vol:	0	6	2	7	13	0	0	0	0	0	1	0	9							
Growth Adj:	1.00	1.00	1.00	1.00	1.00	1.00	1.00	1.00	1.00	1.00	1.00	1.00								
Initial Bse:	0	6	2	7	13	0	0	0	0	1	0	9								
Added Vol:	0	0	0	0	0	0	0	0	0	0	0	0								
PasserByVol:	0	0	0	0	0	0	0	0	0	0	0	0								
Initial Fut:	0	6	2	7	13	0	0	0	0	1	0	9								
User Adj:	1.00	1.00	1.00	1.00	1.00	1.00	1.00	1.00	1.00	1.00	1.00	1.00								
PHF Adj:	1.00	1.00	1.00	1.00	1.00	1.00	1.00	1.00	1.00	1.00	1.00	1.00								
PHF Volume:	0	6	2	7	13	0	0	0	0	1	0	9								
Reduct Vol:	0	0	0	0	0	0	0	0	0	0	0	0								
FinalVolume:	0	6	2	7	13	0	0	0	0	1	0	9								
Critical Gap Module:																				
Critical Gp:	xxxxx	xxxx	xxxxx	4.1	xxxx	xxxxx	xxxxx	xxxx	xxxxx	6.4	6.5	6.2								
FollowUpTim:	xxxxx	xxxx	xxxxx	2.2	xxxx	xxxxx	xxxxx	xxxx	xxxxx	3.5	4.0	3.3								
Capacity Module:																				
Cnflict Vol:	xxxx	xxxx	xxxxx	8	xxxx	xxxxx	xxxx	xxxx	xxxxx	34	34	7								
Potent Cap.:	xxxx	xxxx	xxxxx	1625	xxxx	xxxxx	xxxx	xxxx	xxxxx	984	863	1081								
Move Cap.:	xxxx	xxxx	xxxxx	1625	xxxx	xxxxx	xxxx	xxxx	xxxxx	981	859	1081								
Volume/Cap:	xxxx	xxxx	xxxx	0.00	xxxx	xxxx	xxxx	xxxx	xxxx	0.00	0.00	0.01								
Level Of Service Module:																				
2Way95thQ:	xxxx	xxxx	xxxxx	0.0	xxxx	xxxxx	xxxx	xxxx	xxxxx	xxxx	xxxx	xxxxx								
Control Del:	xxxxx	xxxx	xxxxx	7.2	xxxx	xxxxx	xxxxx	xxxx	xxxxx	xxxxx	xxxx	xxxxx								
LOS by Move:	*	*	*	A	*	*	*	*	*	*	*	*								
Movement:	LT - LTR - RT																			
Shared Cap.:	xxxx	xxxx	xxxxx	xxxx	xxxx	xxxxx	xxxx	xxxx	xxxxx	xxxx	1070	xxxxx								
SharedQueue:	xxxxx	xxxx	xxxxx	0.0	xxxx	xxxxx	xxxxx	xxxx	xxxxx	xxxxx	0.0	xxxxx								
Shrd ConDel:	xxxxx	xxxx	xxxxx	7.2	xxxx	xxxxx	xxxxx	xxxx	xxxxx	xxxxx	8.4	xxxxx								
Shared LOS:	*	*	*	A	*	*	*	*	*	*	A	*								
ApproachDel:	xxxxxx			xxxxxx			xxxxxx			8.4										
ApproachLOS:	*			*			*			A										

Note: Queue reported is the number of cars per lane.

Traffix 7.9.0215 (c) 2008 Dowling Assoc. Licensed to MMA, LONG BEACH, CA

Overlook Parkway Extension
Existing
PM Peak Hour

Level Of Service Computation Report
2000 HCM Operations Method (Future Volume Alternative)

Intersection #19 Trautwein Rd/John F. Kennedy Dr

Cycle (sec): 100 Critical Vol./Cap.(X): 0.632
Loss Time (sec): 16 (Y+R=4.0 sec) Average Delay (sec/veh): 20.3
Optimal Cycle: 60 Level Of Service: C

Street Name:	Trautwein Rd									John F. Kennedy Dr							
Approach:	North Bound					South Bound				East Bound					West Bound		
Movement:	L	-	T	-	R	L	-	T	-	R	L	-	T	-	R	L	-	T	-	R
Control:	Protected					Protected					Protected					Protected				
Rights:	Include					Ovl					Include					Include				
Min. Green:	7	7	7	7	7	7	7	7	7	7	7	7								
Lanes:	1	0	2	0	1	1	0	2	0	1	2	0	1	0	1	1	0	0	1	0
Volume Module:																				
Base Vol:	30	878	30	35	1413	455	343	19	68	30	14	28								
Growth Adj:	1.00	1.00	1.00	1.00	1.00	1.00	1.00	1.00	1.00	1.00	1.00	1.00								
Initial Bse:	30	878	30	35	1413	455	343	19	68	30	14	28								
Added Vol:	0	0	0	0	0	0	0	0	0	0	0	0								
PasserByVol:	0	0	0	0	0	0	0	0	0	0	0	0								
Initial Fut:	30	878	30	35	1413	455	343	19	68	30	14	28								
User Adj:	1.00	1.00	1.00	1.00	1.00	1.00	1.00	1.00	1.00	1.00	1.00	1.00								
PHF Adj:	1.00	1.00	1.00	1.00	1.00	1.00	1.00	1.00	1.00	1.00	1.00	1.00								
PHF Volume:	30	878	30	35	1413	455	343	19	68	30	14	28								
Reduct Vol:	0	0	0	0	0	0	0	0	0	0	0	0								
Reduced Vol:	30	878	30	35	1413	455	343	19	68	30	14	28								
PCE Adj:	1.00	1.00	1.00	1.00	1.00	1.00	1.00	1.00	1.00	1.00	1.00	1.00								
MLF Adj:	1.00	1.00	1.00	1.00	1.00	1.00	1.00	1.00	1.00	1.00	1.00	1.00								
FinalVolume:	30	878	30	35	1413	455	343	19	68	30	14	28								
Saturation Flow Module:																				
Sat/Lane:	1900	1900	1900	1900	1900	1900	1900	1900	1900	1900	1900	1900								
Adjustment:	0.95	0.95	0.85	0.95	0.95	0.85	0.92	1.00	0.85	0.95	0.90	0.90								
Lanes:	1.00	2.00	1.00	1.00	2.00	1.00	2.00	1.00	1.00	1.00	0.33	0.67								
Final Sat.:	1805	3610	1615	1805	3610	1615	3502	1900	1615	1805	570	1140								
Capacity Analysis Module:																				
Vol/Sat:	0.02	0.24	0.02	0.02	0.39	0.28	0.10	0.01	0.04	0.02	0.02	0.02								
Crit Moves:	****				****		****				****									
Green/Cycle:	0.07	0.49	0.49	0.14	0.56	0.70	0.14	0.11	0.11	0.11	0.07	0.07								
Volume/Cap:	0.24	0.50	0.04	0.14	0.70	0.40	0.70	0.10	0.40	0.16	0.35	0.35								
Delay/Veh:	44.9	17.5	13.3	37.9	17.0	6.5	45.4	40.7	43.4	41.1	46.1	46.1								
User DelAdj:	1.00	1.00	1.00	1.00	1.00	1.00	1.00	1.00	1.00	1.00	1.00	1.00								
AdjDel/Veh:	44.9	17.5	13.3	37.9	17.0	6.5	45.4	40.7	43.4	41.1	46.1	46.1								
LOS by Move:	D	B	B	D	B	A	D	D	D	D	D	D								
HCM2kAvgQ:	1	10	0	1	17	6	7	1	2	1	2	2								

Note: Queue reported is the number of cars per lane.

Traffix 7.9.0215 (c) 2008 Dowling Assoc. Licensed to MMA, LONG BEACH, CA

Overlook Parkway Extension
Existing
PM Peak Hour

Level Of Service Computation Report
2000 HCM Operations Method (Future Volume Alternative)

Intersection #20 Washington St/Bradley St

Cycle (sec): 100 Critical Vol./Cap.(X): 0.611
Loss Time (sec): 12 (Y+R=4.0 sec) Average Delay (sec/veh): 25.4
Optimal Cycle: 50 Level Of Service: C

Street Name:	Washington St						Bradley St					
Approach:	North Bound			South Bound			East Bound			West Bound		
Movement:	L -	T -	R	L -	T -	R	L -	T -	R	L -	T -	R
Control:	Protected			Protected			Permitted			Permitted		
Rights:	Include			Include			Include			Include		
Min. Green:	7	7	7	7	7	7	7	7	7	7	7	7
Lanes:	1 0	1 0	1	1 0	0 1	0	0 0	1! 0	0	0 0	1! 0	0
Volume Module:												
Base Vol:	130	354	17	93	596	0	1	33	221	20	16	40
Growth Adj:	1.00	1.00	1.00	1.00	1.00	1.00	1.00	1.00	1.00	1.00	1.00	1.00
Initial Bse:	130	354	17	93	596	0	1	33	221	20	16	40
Added Vol:	0	0	0	0	0	0	0	0	0	0	0	0
PasserByVol:	0	0	0	0	0	0	0	0	0	0	0	0
Initial Fut:	130	354	17	93	596	0	1	33	221	20	16	40
User Adj:	1.00	1.00	1.00	1.00	1.00	1.00	1.00	1.00	1.00	1.00	1.00	1.00
PHF Adj:	1.00	1.00	1.00	1.00	1.00	1.00	1.00	1.00	1.00	1.00	1.00	1.00
PHF Volume:	130	354	17	93	596	0	1	33	221	20	16	40
Reduct Vol:	0	0	0	0	0	0	0	0	0	0	0	0
Reduced Vol:	130	354	17	93	596	0	1	33	221	20	16	40
PCE Adj:	1.00	1.00	1.00	1.00	1.00	1.00	1.00	1.00	1.00	1.00	1.00	1.00
MLF Adj:	1.00	1.00	1.00	1.00	1.00	1.00	1.00	1.00	1.00	1.00	1.00	1.00
FinalVolume:	130	354	17	93	596	0	1	33	221	20	16	40
Saturation Flow Module:												
Sat/Lane:	1900	1900	1900	1900	1900	1900	1900	1900	1900	1900	1900	1900
Adjustment:	0.95	1.00	0.85	0.95	1.00	1.00	0.88	0.88	0.88	0.84	0.84	0.84
Lanes:	1.00	1.00	1.00	1.00	1.00	0.00	0.01	0.13	0.86	0.26	0.21	0.53
Final Sat.:	1805	1900	1615	1805	1900	0	7	217	1453	420	336	841
Capacity Analysis Module:												
Vol/Sat:	0.07	0.19	0.01	0.05	0.31	0.00	0.15	0.15	0.15	0.05	0.05	0.05
Crit Moves:	****				****			****				
Green/Cycle:	0.12	0.46	0.46	0.17	0.51	0.00	0.25	0.25	0.25	0.25	0.25	0.25
Volume/Cap:	0.61	0.41	0.02	0.30	0.61	0.00	0.61	0.61	0.61	0.19	0.19	0.19
Delay/Veh:	47.1	18.3	14.8	36.7	18.4	0.0	35.9	35.9	35.9	29.8	29.8	29.8
User DelAdj:	1.00	1.00	1.00	1.00	1.00	1.00	1.00	1.00	1.00	1.00	1.00	1.00
AdjDel/Veh:	47.1	18.3	14.8	36.7	18.4	0.0	35.9	35.9	35.9	29.8	29.8	29.8
LOS by Move:	D	B	B	D	B	A	D	D	D	C	C	C
HCM2kAvgQ:	5	7	0	3	13	0	8	8	8	2	2	2

Note: Queue reported is the number of cars per lane.

Traffix 7.9.0215 (c) 2008 Dowling Assoc. Licensed to MMA, LONG BEACH, CA

Overlook Parkway Extension
Existing
PM Peak Hour

Level Of Service Computation Report
2000 HCM Operations Method (Future Volume Alternative)

Intersection #21 Alessandro Blvd/Via Vista Dr

Cycle (sec): 100 Critical Vol./Cap.(X): 0.705
Loss Time (sec): 16 (Y+R=4.0 sec) Average Delay (sec/veh): 17.2
Optimal Cycle: 70 Level Of Service: B

Street Name:	Alessandro Blvd						Via Vista Dr					
Approach:	North Bound			South Bound			East Bound			West Bound		
Movement:	L -	T -	R	L -	T -	R	L -	T -	R	L -	T -	R
Control:	Protected			Protected			Protected			Protected		
Rights:	Include			Include			Include			Include		
Min. Green:	7	7	7	7	7	7	7	7	7	7	7	7
Lanes:	1 0	2 1	0	1 0	2 1	0	1 0	1 0	1	1 0	1 0	1
Volume Module:												
Base Vol:	41	1265	16	76	2514	72	49	22	46	19	22	67
Growth Adj:	1.00	1.00	1.00	1.00	1.00	1.00	1.00	1.00	1.00	1.00	1.00	1.00
Initial Bse:	41	1265	16	76	2514	72	49	22	46	19	22	67
Added Vol:	0	0	0	0	0	0	0	0	0	0	0	0
PasserByVol:	0	0	0	0	0	0	0	0	0	0	0	0
Initial Fut:	41	1265	16	76	2514	72	49	22	46	19	22	67
User Adj:	1.00	1.00	1.00	1.00	1.00	1.00	1.00	1.00	1.00	1.00	1.00	1.00
PHF Adj:	1.00	1.00	1.00	1.00	1.00	1.00	1.00	1.00	1.00	1.00	1.00	1.00
PHF Volume:	41	1265	16	76	2514	72	49	22	46	19	22	67
Reduct Vol:	0	0	0	0	0	0	0	0	0	0	0	0
Reduced Vol:	41	1265	16	76	2514	72	49	22	46	19	22	67
PCE Adj:	1.00	1.00	1.00	1.00	1.00	1.00	1.00	1.00	1.00	1.00	1.00	1.00
MLF Adj:	1.00	1.00	1.00	1.00	1.00	1.00	1.00	1.00	1.00	1.00	1.00	1.00
FinalVolume:	41	1265	16	76	2514	72	49	22	46	19	22	67
Saturation Flow Module:												
Sat/Lane:	1900	1900	1900	1900	1900	1900	1900	1900	1900	1900	1900	1900
Adjustment:	0.95	0.91	0.91	0.95	0.91	0.91	0.95	1.00	0.85	0.95	1.00	0.85
Lanes:	1.00	2.96	0.04	1.00	2.92	0.08	1.00	1.00	1.00	1.00	1.00	1.00
Final Sat.:	1805	5112	65	1805	5022	144	1805	1900	1615	1805	1900	1615
Capacity Analysis Module:												
Vol/Sat:	0.02	0.25	0.25	0.04	0.50	0.50	0.03	0.01	0.03	0.01	0.01	0.04
Crit Moves:	****				****		****					****
Green/Cycle:	0.07	0.55	0.55	0.15	0.63	0.63	0.07	0.07	0.07	0.07	0.07	0.07
Volume/Cap:	0.32	0.45	0.45	0.27	0.79	0.79	0.39	0.17	0.41	0.15	0.17	0.59
Delay/Veh:	45.7	13.8	13.8	37.9	15.1	15.1	46.4	44.3	46.9	44.3	44.3	53.3
User DelAdj:	1.00	1.00	1.00	1.00	1.00	1.00	1.00	1.00	1.00	1.00	1.00	1.00
AdjDel/Veh:	45.7	13.8	13.8	37.9	15.1	15.1	46.4	44.3	46.9	44.3	44.3	53.3
LOS by Move:	D	B	B	D	B	B	D	D	D	D	D	D
HCM2kAvgQ:	2	9	9	2	23	23	2	1	2	1	1	3

Note: Queue reported is the number of cars per lane.

Traffix 7.9.0215 (c) 2008 Dowling Assoc. Licensed to MMA, LONG BEACH, CA

Overlook Parkway Extension
Existing
PM Peak Hour

Level Of Service Computation Report
2000 HCM 4-Way Stop Method (Future Volume Alternative)

Intersection #23 Mary St/Hawarden Dr

Cycle (sec):	100	Critical Vol./Cap.(X):	0.211
Loss Time (sec):	0 (Y+R=4.0 sec)	Average Delay (sec/veh):	7.8
Optimal Cycle:	0	Level Of Service:	A

Street Name:	Mary St							Hawarden Dr					
Approach:	North Bound			South Bound			East Bound			West Bound			
Movement:	L	T	R	L	T	R	L	T	R	L	T	R	
Control:	Stop Sign			Stop Sign			Stop Sign			Stop Sign			
Rights:	Include			Include			Include			Include			
Min. Green:	7	7	7	7	7	7	7	7	7	7	7	7	
Lanes:	0 1	0	0 0	0 0	0 1	0	0 0	1! 0	0	0 0	0 0	0	
Volume Module:													
Base Vol:	6	56	0	0	116	80	44	0	6	0	0	0	
Growth Adj:	1.00	1.00	1.00	1.00	1.00	1.00	1.00	1.00	1.00	1.00	1.00	1.00	
Initial Bse:	6	56	0	0	116	80	44	0	6	0	0	0	
Added Vol:	0	0	0	0	0	0	0	0	0	0	0	0	
PasserByVol:	0	0	0	0	0	0	0	0	0	0	0	0	
Initial Fut:	6	56	0	0	116	80	44	0	6	0	0	0	
User Adj:	1.00	1.00	1.00	1.00	1.00	1.00	1.00	1.00	1.00	1.00	1.00	1.00	
PHF Adj:	1.00	1.00	1.00	1.00	1.00	1.00	1.00	1.00	1.00	1.00	1.00	1.00	
PHF Volume:	6	56	0	0	116	80	44	0	6	0	0	0	
Reduct Vol:	0	0	0	0	0	0	0	0	0	0	0	0	
Reduced Vol:	6	56	0	0	116	80	44	0	6	0	0	0	
PCE Adj:	1.00	1.00	1.00	1.00	1.00	1.00	1.00	1.00	1.00	1.00	1.00	1.00	
MLF Adj:	1.00	1.00	1.00	1.00	1.00	1.00	1.00	1.00	1.00	1.00	1.00	1.00	
FinalVolume:	6	56	0	0	116	80	44	0	6	0	0	0	
Saturation Flow Module:													
Adjustment:	1.00	1.00	1.00	1.00	1.00	1.00	1.00	1.00	1.00	1.00	1.00	1.00	
Lanes:	0.10	0.90	0.00	0.00	0.59	0.41	0.88	0.00	0.12	0.00	0.00	0.00	
Final Sat.:	81	759	0	0	550	379	671	0	91	0	0	0	
Capacity Analysis Module:													
Vol/Sat:	0.07	0.07	xxxx	xxxx	0.21	0.21	0.07	xxxx	0.07	xxxx	xxxx	xxxx	
Crit Moves:		****			****		****						
Delay/Veh:	7.5	7.5	0.0	0.0	7.8	7.8	7.8	0.0	7.8	0.0	0.0	0.0	
Delay Adj:	1.00	1.00	1.00	1.00	1.00	1.00	1.00	1.00	1.00	1.00	1.00	1.00	
AdjDel/Veh:	7.5	7.5	0.0	0.0	7.8	7.8	7.8	0.0	7.8	0.0	0.0	0.0	
LOS by Move:	A	A	*	*	A	A	A	*	A	*	*	*	
ApproachDel:	7.5				7.8		7.8			xxxxxx			
Delay Adj:	1.00				1.00		1.00			xxxxx			
ApprAdjDel:	7.5				7.8		7.8			xxxxxx			
LOS by Appr:	A				A		A			*			
AllWayAvgQ:	0.1	0.1	0.1	0.3	0.3	0.3	0.1	0.1	0.1	0.0	0.0	0.0	

Traffix 7.9.0215 (c) 2008 Dowling Assoc. Licensed to MMA, LONG BEACH, CA

Overlook Parkway Extension
Existing
PM Peak Hour

Note: Queue reported is the number of cars per lane.

Traffix 7.9.0215 (c) 2008 Dowling Assoc. Licensed to MMA, LONG BEACH, CA

Overlook Parkway Extension
Existing
PM Peak Hour

Level Of Service Computation Report
2000 HCM 4-Way Stop Method (Future Volume Alternative)

Intersection #24 Hawarden Dr/Overlook Pkwy

Cycle (sec):	100	Critical Vol./Cap.(X):	0.095
Loss Time (sec):	0 (Y+R=4.0 sec)	Average Delay (sec/veh):	7.8
Optimal Cycle:	0	Level Of Service:	A

Street Name:	Hawarden Dr					Overlook Pkwy					
Approach:	North Bound			South Bound			East Bound			West Bound		
Movement:	L -	T -	R	L -	T -	R	L -	T -	R	L -	T -	R
Control:	Stop Sign			Stop Sign			Stop Sign			Stop Sign		
Rights:	Include			Include			Include			Include		
Min. Green:	7	7	7	7	7	7	7	7	7	7	7	7
Lanes:	0 0	1! 0	0	0 0	1! 0	0	1 0	1 1	0	1 0	1 1	0
Volume Module:												
Base Vol:	24	24	8	17	47	11	8	70	54	6	63	4
Growth Adj:	1.00	1.00	1.00	1.00	1.00	1.00	1.00	1.00	1.00	1.00	1.00	1.00
Initial Bse:	24	24	8	17	47	11	8	70	54	6	63	4
Added Vol:	0	0	0	0	0	0	0	0	0	0	0	0
PasserByVol:	0	0	0	0	0	0	0	0	0	0	0	0
Initial Fut:	24	24	8	17	47	11	8	70	54	6	63	4
User Adj:	1.00	1.00	1.00	1.00	1.00	1.00	1.00	1.00	1.00	1.00	1.00	1.00
PHF Adj:	1.00	1.00	1.00	1.00	1.00	1.00	1.00	1.00	1.00	1.00	1.00	1.00
PHF Volume:	24	24	8	17	47	11	8	70	54	6	63	4
Reduct Vol:	0	0	0	0	0	0	0	0	0	0	0	0
Reduced Vol:	24	24	8	17	47	11	8	70	54	6	63	4
PCE Adj:	1.00	1.00	1.00	1.00	1.00	1.00	1.00	1.00	1.00	1.00	1.00	1.00
MLF Adj:	1.00	1.00	1.00	1.00	1.00	1.00	1.00	1.00	1.00	1.00	1.00	1.00
FinalVolume:	24	24	8	17	47	11	8	70	54	6	63	4
Saturation Flow Module:												
Adjustment:	1.00	1.00	1.00	1.00	1.00	1.00	1.00	1.00	1.00	1.00	1.00	1.00
Lanes:	0.43	0.43	0.14	0.22	0.63	0.15	1.00	1.13	0.87	1.00	1.88	0.12
Final Sat.:	333	333	111	179	495	116	658	831	720	652	1358	87
Capacity Analysis Module:												
Vol/Sat:	0.07	0.07	0.07	0.10	0.10	0.10	0.01	0.08	0.07	0.01	0.05	0.05
Crit Moves:		****			****			****			****	
Delay/Veh:	7.8	7.8	7.8	7.8	7.8	7.8	8.1	7.9	7.3	8.1	7.8	7.7
Delay Adj:	1.00	1.00	1.00	1.00	1.00	1.00	1.00	1.00	1.00	1.00	1.00	1.00
AdjDel/Veh:	7.8	7.8	7.8	7.8	7.8	7.8	8.1	7.9	7.3	8.1	7.8	7.7
LOS by Move:	A	A	A	A	A	A	A	A	A	A	A	A
ApproachDel:	7.8			7.8			7.7			7.8		
Delay Adj:	1.00			1.00			1.00			1.00		
ApprAdjDel:	7.8			7.8			7.7			7.8		
LOS by Appr:	A			A			A			A		
AllWayAvgQ:	0.1	0.1	0.1	0.1	0.1	0.1	0.0	0.1	0.1	0.0	0.0	0.0

Traffix 7.9.0215 (c) 2008 Dowling Assoc. Licensed to MMA, LONG BEACH, CA

Overlook Parkway Extension
Existing
PM Peak Hour

Note: Queue reported is the number of cars per lane.

Traffix 7.9.0215 (c) 2008 Dowling Assoc. Licensed to MMA, LONG BEACH, CA

Overlook Parkway Extension
Existing
PM Peak Hour

Level Of Service Computation Report
2000 HCM 4-Way Stop Method (Future Volume Alternative)

Intersection #25 Crystal View Ter/Berry Rd

Cycle (sec):	100	Critical Vol./Cap.(X):	0.045
Loss Time (sec):	0 (Y+R=4.0 sec)	Average Delay (sec/veh):	6.9
Optimal Cycle:	0	Level Of Service:	A

Street Name:	Crystal View Ter							Berry Rd					
Approach:	North Bound			South Bound			East Bound			West Bound			
Movement:	L	T	R	L	T	R	L	T	R	L	T	R	
Control:	Stop Sign			Stop Sign			Stop Sign			Stop Sign			
Rights:	Include			Include			Include			Include			
Min. Green:	7	7	7	7	7	7	7	7	7	7	7	7	
Lanes:	0 0	1! 0	0	0 0	1! 0	0	0 0	1! 0	0	0 0	1! 0	0	
Volume Module:													
Base Vol:	2	4	26	3	4	2	1	2	3	30	3	7	
Growth Adj:	1.00	1.00	1.00	1.00	1.00	1.00	1.00	1.00	1.00	1.00	1.00	1.00	
Initial Bse:	2	4	26	3	4	2	1	2	3	30	3	7	
Added Vol:	0	0	0	0	0	0	0	0	0	0	0	0	
PasserByVol:	0	0	0	0	0	0	0	0	0	0	0	0	
Initial Fut:	2	4	26	3	4	2	1	2	3	30	3	7	
User Adj:	1.00	1.00	1.00	1.00	1.00	1.00	1.00	1.00	1.00	1.00	1.00	1.00	
PHF Adj:	1.00	1.00	1.00	1.00	1.00	1.00	1.00	1.00	1.00	1.00	1.00	1.00	
PHF Volume:	2	4	26	3	4	2	1	2	3	30	3	7	
Reduct Vol:	0	0	0	0	0	0	0	0	0	0	0	0	
Reduced Vol:	2	4	26	3	4	2	1	2	3	30	3	7	
PCE Adj:	1.00	1.00	1.00	1.00	1.00	1.00	1.00	1.00	1.00	1.00	1.00	1.00	
MLF Adj:	1.00	1.00	1.00	1.00	1.00	1.00	1.00	1.00	1.00	1.00	1.00	1.00	
FinalVolume:	2	4	26	3	4	2	1	2	3	30	3	7	
Saturation Flow Module:													
Adjustment:	1.00	1.00	1.00	1.00	1.00	1.00	1.00	1.00	1.00	1.00	1.00	1.00	
Lanes:	0.06	0.13	0.81	0.33	0.45	0.22	0.17	0.33	0.50	0.75	0.07	0.18	
Final Sat.:	63	126	820	300	400	200	158	317	475	664	66	155	
Capacity Analysis Module:													
Vol/Sat:	0.03	0.03	0.03	0.01	0.01	0.01	0.01	0.01	0.01	0.05	0.05	0.05	
Crit Moves:		****			****		****				****		
Delay/Veh:	6.6	6.6	6.6	7.0	7.0	7.0	6.8	6.8	6.8	7.2	7.2	7.2	
Delay Adj:	1.00	1.00	1.00	1.00	1.00	1.00	1.00	1.00	1.00	1.00	1.00	1.00	
AdjDel/Veh:	6.6	6.6	6.6	7.0	7.0	7.0	6.8	6.8	6.8	7.2	7.2	7.2	
LOS by Move:	A	A	A	A	A	A	A	A	A	A	A	A	
ApproachDel:	6.6			7.0			6.8			7.2			
Delay Adj:	1.00			1.00			1.00			1.00			
ApprAdjDel:	6.6			7.0			6.8			7.2			
LOS by Appr:	A			A			A			A			
AllWayAvgQ:	0.0	0.0	0.0	0.0	0.0	0.0	0.0	0.0	0.0	0.0	0.0	0.0	

Overlook Parkway Extension
Existing
PM Peak Hour

Note: Queue reported is the number of cars per lane.

Overlook Parkway Extension
Existing
PM Peak Hour

Level Of Service Computation Report
2000 HCM 4-Way Stop Method (Future Volume Alternative)

Intersection #26 Corinthian Wy/Berry Rd

Cycle (sec): 100 Critical Vol./Cap.(X): 0.044
Loss Time (sec): 0 (Y+R=4.0 sec) Average Delay (sec/veh): 6.9
Optimal Cycle: 0 Level Of Service: A

Street Name:	Corinthian Wy						Berry Rd					
Approach:	North Bound			South Bound			East Bound			West Bound		
Movement:	L	T	R	L	T	R	L	T	R	L	T	R
Control:	Stop Sign			Stop Sign			Stop Sign			Stop Sign		
Rights:	Include			Include			Include			Include		
Min. Green:	7	7	7	7	7	7	7	7	7	7	7	7
Lanes:	0 0	0 0	0	0 0	1! 0	0	0 1	0 0	0	0 0	0 1	0
Volume Module:												
Base Vol:	0	0	0	8	0	36	20	11	0	0	15	9
Growth Adj:	1.00	1.00	1.00	1.00	1.00	1.00	1.00	1.00	1.00	1.00	1.00	1.00
Initial Bse:	0	0	0	8	0	36	20	11	0	0	15	9
Added Vol:	0	0	0	0	0	0	0	0	0	0	0	0
PasserByVol:	0	0	0	0	0	0	0	0	0	0	0	0
Initial Fut:	0	0	0	8	0	36	20	11	0	0	15	9
User Adj:	1.00	1.00	1.00	1.00	1.00	1.00	1.00	1.00	1.00	1.00	1.00	1.00
PHF Adj:	1.00	1.00	1.00	1.00	1.00	1.00	1.00	1.00	1.00	1.00	1.00	1.00
PHF Volume:	0	0	0	8	0	36	20	11	0	0	15	9
Reduct Vol:	0	0	0	0	0	0	0	0	0	0	0	0
Reduced Vol:	0	0	0	8	0	36	20	11	0	0	15	9
PCE Adj:	1.00	1.00	1.00	1.00	1.00	1.00	1.00	1.00	1.00	1.00	1.00	1.00
MLF Adj:	1.00	1.00	1.00	1.00	1.00	1.00	1.00	1.00	1.00	1.00	1.00	1.00
FinalVolume:	0	0	0	8	0	36	20	11	0	0	15	9
Saturation Flow Module:												
Adjustment:	1.00	1.00	1.00	1.00	1.00	1.00	1.00	1.00	1.00	1.00	1.00	1.00
Lanes:	0.00	0.00	0.00	0.18	0.00	0.82	0.65	0.35	0.00	0.00	0.62	0.38
Final Sat.:	0	0	0	182	0	818	556	306	0	0	588	353
Capacity Analysis Module:												
Vol/Sat:	xxxx	xxxx	xxxx	0.04	xxxx	0.04	0.04	0.04	xxxx	xxxx	0.03	0.03
Crit Moves:				****			****				****	
Delay/Veh:	0.0	0.0	0.0	6.7	0.0	6.7	7.3	7.3	0.0	0.0	6.9	6.9
Delay Adj:	1.00	1.00	1.00	1.00	1.00	1.00	1.00	1.00	1.00	1.00	1.00	1.00
AdjDel/Veh:	0.0	0.0	0.0	6.7	0.0	6.7	7.3	7.3	0.0	0.0	6.9	6.9
LOS by Move:	*	*	*	A	*	A	A	A	*	*	A	A
ApproachDel:	xxxxxx			6.7			7.3			6.9		
Delay Adj:	xxxxx			1.00			1.00			1.00		
ApprAdjDel:	xxxxxx			6.7			7.3			6.9		
LOS by Appr:	*			A			A			A		
AllWayAvgQ:	0.0	0.0	0.0	0.0	0.0	0.0	0.0	0.0	0.0	0.0	0.0	0.0

Traffix 7.9.0215 (c) 2008 Dowling Assoc. Licensed to MMA, LONG BEACH, CA

Overlook Parkway Extension
Existing
PM Peak Hour

Note: Queue reported is the number of cars per lane.

Traffix 7.9.0215 (c) 2008 Dowling Assoc. Licensed to MMA, LONG BEACH, CA

HCM Unsignalized Intersection Capacity Analysis
27: Madison St & Dufferin Ave

6/21/2011

Movement	EBL	EBR	SBL	SBR	NEL2	NEL	NET	SWT	SWR	SWR2
Lane Configurations										
Sign Control	Stop		Stop				Stop	Stop		
Volume (vph)	52	10	1	0	7	1	19	8	23	5
Peak Hour Factor	1.00	1.00	1.00	1.00	1.00	1.00	1.00	1.00	1.00	1.00
Hourly flow rate (vph)	52	10	1	0	7	1	19	8	23	5

Direction, Lane #	EB 1	SB 1	NE 1	SW 1
Volume Total (vph)	62	1	27	36
Volume Left (vph)	0	1	7	8
Volume Right (vph)	10	0	19	5
Hadj (s)	-0.08	0.22	-0.35	-0.02
Departure Headway (s)	3.9	4.3	3.8	4.0
Degree Utilization, x	0.07	0.00	0.03	0.04
Capacity (veh/h)	907	805	924	889
Control Delay (s)	7.2	7.4	6.9	7.2
Approach Delay (s)	7.2	7.4	6.9	7.2
Approach LOS	A	A	A	A

Intersection Summary				
Delay		7.1		
HCM Level of Service		A		
Intersection Capacity Utilization		24.9%	ICU Level of Service	A
Analysis Period (min)		15		


```
Existing PM                Tue Jun 21, 2011 14:40:39                Page 27-1
-------------------------------------------------------------------------------
                          Overlook Parkway Extension
                                   Existing
                                PM Peak Hour
-------------------------------------------------------------------------------
                        Level Of Service Computation Report
            2000 HCM Unsignalized Method (Future Volume Alternative)
*******************************************************************************
Intersection #28 Orozco Dr/Overlook Pkwy
*******************************************************************************
Average Delay (sec/veh):      2.7       Worst Case Level Of Service: A[  9.5]
*******************************************************************************
Street Name:             Orozco Dr                        Overlook Pkwy
Approach:      North Bound      South Bound       East Bound       West Bound
Movement:     L  -  T  -  R    L  -  T  -  R    L  -  T  -  R    L  -  T  -  R
------------|---------------||---------------||---------------||---------------|
Control:        Stop Sign        Stop Sign       Uncontrolled     Uncontrolled
Rights:           Include          Include          Include          Include
Lanes:        0  0  1! 0  0    0  0  1! 0  0    1  0  1  1  0    1  0  1  1  0
------------|---------------||---------------||---------------||---------------|
Volume Module:
Base Vol:       4    2     1    45    4     2     3   63     3     1   59    30
Growth Adj:  1.00 1.00  1.00  1.00 1.00  1.00  1.00 1.00  1.00  1.00 1.00  1.00
Initial Bse:    4    2     1    45    4     2     3   63     3     1   59    30
Added Vol:      0    0     0     0    0     0     0    0     0     0    0     0
PasserByVol:    0    0     0     0    0     0     0    0     0     0    0     0
Initial Fut:    4    2     1    45    4     2     3   63     3     1   59    30
User Adj:    1.00 1.00  1.00  1.00 1.00  1.00  1.00 1.00  1.00  1.00 1.00  1.00
PHF Adj:     1.00 1.00  1.00  1.00 1.00  1.00  1.00 1.00  1.00  1.00 1.00  1.00
PHF Volume:     4    2     1    45    4     2     3   63     3     1   59    30
Reduct Vol:     0    0     0     0    0     0     0    0     0     0    0     0
FinalVolume:    4    2     1    45    4     2     3   63     3     1   59    30
------------|---------------||---------------||---------------||---------------|
Critical Gap Module:
Critical Gp:  7.5  6.5   6.9   7.5  6.5   6.9   4.1 xxxx xxxxx   4.1 xxxx xxxxx
FollowUpTim:  3.5  4.0   3.3   3.5  4.0   3.3   2.2 xxxx xxxxx   2.2 xxxx xxxxx
------------|---------------||---------------||---------------||---------------|
Capacity Module:
Cnflict Vol:  104  162    33   115  148    45    89 xxxx xxxxx    66 xxxx xxxxx
Potent Cap.:  871  734  1040   856  747  1022  1519 xxxx xxxxx  1549 xxxx xxxxx
Move Cap.:    864  733  1040   852  745  1022  1519 xxxx xxxxx  1549 xxxx xxxxx
Volume/Cap:  0.00 0.00  0.00  0.05 0.01  0.00  0.00 xxxx  xxxx  0.00 xxxx  xxxx
------------|---------------||---------------||---------------||---------------|
Level Of Service Module:
2Way95thQ:   xxxx xxxx xxxxx  xxxx xxxx xxxxx   0.0 xxxx xxxxx   0.0 xxxx xxxxx
Control Del:xxxxx xxxx xxxxx xxxxx xxxx xxxxx   7.4 xxxx xxxxx   7.3 xxxx xxxxx
LOS by Move:    *    *     *     *    *     *     A    *     *     A    *     *
Movement:     LT - LTR - RT    LT - LTR - RT    LT - LTR - RT    LT - LTR - RT
Shared Cap.: xxxx  841 xxxxx  xxxx  848 xxxxx  xxxx xxxx xxxxx  xxxx xxxx xxxxx
SharedQueue:xxxxx  0.0 xxxxx xxxxx  0.2 xxxxx xxxxx xxxx xxxxx xxxxx xxxx xxxxx
Shrd ConDel:xxxxx  9.3 xxxxx xxxxx  9.5 xxxxx xxxxx xxxx xxxxx xxxxx xxxx xxxxx
Shared LOS:     *    A     *     *    A     *     *    *     *     *    *     *
ApproachDel:       9.3              9.5           xxxxxx           xxxxxx
ApproachLOS:         A                A                *                *
*******************************************************************************
Note: Queue reported is the number of cars per lane.
*******************************************************************************

  Traffix 7.9.0215 (c) 2008 Dowling Assoc. Licensed to MMA, LONG BEACH, CA
```

Overlook Parkway Extension
Existing
PM Peak Hour

Level Of Service Computation Report
2000 HCM 4-Way Stop Method (Future Volume Alternative)

Intersection #51 Madison St/Victoria Ave (North)

Cycle (sec):	100	Critical Vol./Cap.(X):	0.357
Loss Time (sec):	0 (Y+R=4.0 sec)	Average Delay (sec/veh):	10.2
Optimal Cycle:	0	Level Of Service:	B

Street Name:	Madison St							Victoria Ave (North)					
Approach:	North Bound			South Bound			East Bound			West Bound			
Movement:	L	T	R	L	T	R	L	T	R	L	T	R	
Control:	Stop Sign			Stop Sign			Stop Sign			Stop Sign			
Rights:	Include			Include			Include			Include			
Min. Green:	7	7	7	7	7	7	7	7	7	7	7	7	
Lanes:	0 1	0	0 0	0 0	1	0 1	0 0	0	0 0	0 1	0	0 1	
Volume Module:													
Base Vol:	10	54	0	0	234	38	0	0	0	7	225	61	
Growth Adj:	1.00	1.00	1.00	1.00	1.00	1.00	1.00	1.00	1.00	1.00	1.00	1.00	
Initial Bse:	10	54	0	0	234	38	0	0	0	7	225	61	
Added Vol:	0	0	0	0	0	0	0	0	0	0	0	0	
PasserByVol:	0	0	0	0	0	0	0	0	0	0	0	0	
Initial Fut:	10	54	0	0	234	38	0	0	0	7	225	61	
User Adj:	1.00	1.00	1.00	1.00	1.00	1.00	1.00	1.00	1.00	1.00	1.00	1.00	
PHF Adj:	1.00	1.00	1.00	1.00	1.00	1.00	1.00	1.00	1.00	1.00	1.00	1.00	
PHF Volume:	10	54	0	0	234	38	0	0	0	7	225	61	
Reduct Vol:	0	0	0	0	0	0	0	0	0	0	0	0	
Reduced Vol:	10	54	0	0	234	38	0	0	0	7	225	61	
PCE Adj:	1.00	1.00	1.00	1.00	1.00	1.00	1.00	1.00	1.00	1.00	1.00	1.00	
MLF Adj:	1.00	1.00	1.00	1.00	1.00	1.00	1.00	1.00	1.00	1.00	1.00	1.00	
FinalVolume:	10	54	0	0	234	38	0	0	0	7	225	61	
Saturation Flow Module:													
Adjustment:	1.00	1.00	1.00	1.00	1.00	1.00	1.00	1.00	1.00	1.00	1.00	1.00	
Lanes:	0.16	0.84	0.00	0.00	1.00	1.00	0.00	0.00	0.00	0.03	0.97	1.00	
Final Sat.:	96	519	0	0	656	747	0	0	0	20	630	742	
Capacity Analysis Module:													
Vol/Sat:	0.10	0.10	xxxx	xxxx	0.36	0.05	xxxx	xxxx	xxxx	0.36	0.36	0.08	
Crit Moves:	****				****						****		
Delay/Veh:	9.2	9.2	0.0	0.0	10.8	7.6	0.0	0.0	0.0	10.8	10.8	7.7	
Delay Adj:	1.00	1.00	1.00	1.00	1.00	1.00	1.00	1.00	1.00	1.00	1.00	1.00	
AdjDel/Veh:	9.2	9.2	0.0	0.0	10.8	7.6	0.0	0.0	0.0	10.8	10.8	7.7	
LOS by Move:	A	A	*	*	B	A	*	*	*	B	B	A	
ApproachDel:	9.2				10.4		xxxxxx			10.2			
Delay Adj:	1.00				1.00		xxxxx			1.00			
ApprAdjDel:	9.2				10.4		xxxxxx			10.2			
LOS by Appr:	A				B		*			B			
AllWayAvgQ:	0.1	0.1	0.1	0.0	0.5	0.0	0.0	0.0	0.0	0.5	0.5	0.1	

Traffix 7.9.0215 (c) 2008 Dowling Assoc. Licensed to MMA, LONG BEACH, CA

Overlook Parkway Extension
Existing
PM Peak Hour

Note: Queue reported is the number of cars per lane.

Traffix 7.9.0215 (c) 2008 Dowling Assoc. Licensed to MMA, LONG BEACH, CA

Overlook Parkway Extension
Existing
PM Peak Hour

Level Of Service Computation Report
2000 HCM 4-Way Stop Method (Future Volume Alternative)

Intersection #52 Madison St/Victoria Ave (South)

Cycle (sec): 100 Critical Vol./Cap.(X): 0.407
Loss Time (sec): 0 (Y+R=4.0 sec) Average Delay (sec/veh): 10.2
Optimal Cycle: 0 Level Of Service: B

Street Name:	Madison ST							Victoria Ave (South)					
Approach:	North Bound			South Bound			East Bound			West Bound			
Movement:	L	- T	- R	L	- T	- R	L	- T	- R	L	- T	- R	
Control:	Stop Sign			Stop Sign			Stop Sign			Stop Sign			
Rights:	Include			Include			Include			Include			
Min. Green:	7	7	7	7	7	7	7	7	7	7	7	7	
Lanes:	0 0	0 1	0	0 1	0 0	0	0 0	1! 0	0	0 0	0 0	0	
Volume Module:													
Base Vol:	0	35	4	153	88	0	29	269	13	0	0	0	
Growth Adj:	1.00	1.00	1.00	1.00	1.00	1.00	1.00	1.00	1.00	1.00	1.00	1.00	
Initial Bse:	0	35	4	153	88	0	29	269	13	0	0	0	
Added Vol:	0	0	0	0	0	0	0	0	0	0	0	0	
PasserByVol:	0	0	0	0	0	0	0	0	0	0	0	0	
Initial Fut:	0	35	4	153	88	0	29	269	13	0	0	0	
User Adj:	1.00	1.00	1.00	1.00	1.00	1.00	1.00	1.00	1.00	1.00	1.00	1.00	
PHF Adj:	1.00	1.00	1.00	1.00	1.00	1.00	1.00	1.00	1.00	1.00	1.00	1.00	
PHF Volume:	0	35	4	153	88	0	29	269	13	0	0	0	
Reduct Vol:	0	0	0	0	0	0	0	0	0	0	0	0	
Reduced Vol:	0	35	4	153	88	0	29	269	13	0	0	0	
PCE Adj:	1.00	1.00	1.00	1.00	1.00	1.00	1.00	1.00	1.00	1.00	1.00	1.00	
MLF Adj:	1.00	1.00	1.00	1.00	1.00	1.00	1.00	1.00	1.00	1.00	1.00	1.00	
FinalVolume:	0	35	4	153	88	0	29	269	13	0	0	0	
Saturation Flow Module:													
Adjustment:	1.00	1.00	1.00	1.00	1.00	1.00	1.00	1.00	1.00	1.00	1.00	1.00	
Lanes:	0.00	0.90	0.10	0.63	0.37	0.00	0.09	0.87	0.04	0.00	0.00	0.00	
Final Sat.:	0	622	71	456	262	0	71	661	32	0	0	0	
Capacity Analysis Module:													
Vol/Sat:	xxxx	0.06	0.06	0.34	0.34	xxxx	0.41	0.41	0.41	xxxx	xxxx	xxxx	
Crit Moves:			****		****				****				
Delay/Veh:	0.0	8.1	8.1	10.1	10.1	0.0	10.5	10.5	10.5	0.0	0.0	0.0	
Delay Adj:	1.00	1.00	1.00	1.00	1.00	1.00	1.00	1.00	1.00	1.00	1.00	1.00	
AdjDel/Veh:	0.0	8.1	8.1	10.1	10.1	0.0	10.5	10.5	10.5	0.0	0.0	0.0	
LOS by Move:	*	A	A	B	B	*	B	B	B	*	*	*	
ApproachDel:	8.1			10.1			10.5			xxxxxx			
Delay Adj:	1.00			1.00			1.00			xxxxx			
ApprAdjDel:	8.1			10.1			10.5			xxxxxx			
LOS by Appr:	A			B			B			*			
AllWayAvgQ:	0.1	0.1	0.1	0.5	0.5	0.5	0.6	0.6	0.6	0.0	0.0	0.0	

Overlook Parkway Extension
Existing
PM Peak Hour

Note: Queue reported is the number of cars per lane.

Overlook Parkway Extension
Existing
PM Peak Hour

Level Of Service Computation Report
2000 HCM 4-Way Stop Method (Future Volume Alternative)

Intersection #81 Washington St/Victoria Ave (North)

Cycle (sec): 100 Critical Vol./Cap.(X): 0.578
Loss Time (sec): 0 (Y+R=4.0 sec) Average Delay (sec/veh): 14.0
Optimal Cycle: 0 Level Of Service: B

Street Name:	Washington St						Victoria Ave (North)					
Approach:	North Bound			South Bound			East Bound			West Bound		
Movement:	L -	T -	R	L -	T -	R	L -	T -	R	L -	T -	R
Control:	Stop Sign			Stop Sign			Stop Sign			Stop Sign		
Rights:	Include			Include			Include			Include		
Min. Green:	7	7	7	7	7	7	7	7	7	7	7	7
Lanes:	0 1	1 0	1	0 0	0 1	0	0 0	0 0	0	1 0	0 1	0
Volume Module:												
Base Vol:	90	238	0	0	255	4	0	0	0	310	174	23
Growth Adj:	1.00	1.00	1.00	1.00	1.00	1.00	1.00	1.00	1.00	1.00	1.00	1.00
Initial Bse:	90	238	0	0	255	4	0	0	0	310	174	23
Added Vol:	0	0	0	0	0	0	0	0	0	0	0	0
PasserByVol:	0	0	0	0	0	0	0	0	0	0	0	0
Initial Fut:	90	238	0	0	255	4	0	0	0	310	174	23
User Adj:	1.00	1.00	1.00	1.00	1.00	1.00	1.00	1.00	1.00	1.00	1.00	1.00
PHF Adj:	1.00	1.00	1.00	1.00	1.00	1.00	1.00	1.00	1.00	1.00	1.00	1.00
PHF Volume:	90	238	0	0	255	4	0	0	0	310	174	23
Reduct Vol:	0	0	0	0	0	0	0	0	0	0	0	0
Reduced Vol:	90	238	0	0	255	4	0	0	0	310	174	23
PCE Adj:	1.00	1.00	1.00	1.00	1.00	1.00	1.00	1.00	1.00	1.00	1.00	1.00
MLF Adj:	1.00	1.00	1.00	1.00	1.00	1.00	1.00	1.00	1.00	1.00	1.00	1.00
FinalVolume:	90	238	0	0	255	4	0	0	0	310	174	23
Saturation Flow Module:												
Adjustment:	1.00	1.00	1.00	1.00	1.00	1.00	1.00	1.00	1.00	1.00	1.00	1.00
Lanes:	0.55	1.45	1.00	0.00	0.98	0.02	0.00	0.00	0.00	1.00	0.88	0.12
Final Sat.:	290	789	614	0	548	9	0	0	0	536	517	68
Capacity Analysis Module:												
Vol/Sat:	0.31	0.30	0.00	xxxx	0.47	0.47	xxxx	xxxx	xxxx	0.58	0.34	0.34
Crit Moves:	****				****					****		
Delay/Veh:	12.1	11.7	0.0	0.0	14.4	14.4	0.0	0.0	0.0	17.5	11.6	11.6
Delay Adj:	1.00	1.00	1.00	1.00	1.00	1.00	1.00	1.00	1.00	1.00	1.00	1.00
AdjDel/Veh:	12.1	11.7	0.0	0.0	14.4	14.4	0.0	0.0	0.0	17.5	11.6	11.6
LOS by Move:	B	B	*	*	B	B	*	*	*	C	B	B
ApproachDel:	11.8			14.4			xxxxxx			15.2		
Delay Adj:	1.00			1.00			xxxxx			1.00		
ApprAdjDel:	11.8			14.4			xxxxxx			15.2		
LOS by Appr:	B			B			*			C		
AllWayAvgQ:	0.4	0.4	0.0	0.8	0.8	0.8	0.0	0.0	0.0	1.2	0.5	0.5

Overlook Parkway Extension
Existing
PM Peak Hour

Note: Queue reported is the number of cars per lane.

Overlook Parkway Extension
Existing
PM Peak Hour

Level Of Service Computation Report
2000 HCM 4-Way Stop Method (Future Volume Alternative)

Intersection #82 Washington St/Victoria Ave (South)

Cycle (sec): 100 Critical Vol./Cap.(X): 0.989
Loss Time (sec): 0 (Y+R=4.0 sec) Average Delay (sec/veh): 30.5
Optimal Cycle: 0 Level Of Service: D

Street Name:	Washington St						Victoria Ave (South)					
Approach:	North Bound			South Bound			East Bound			West Bound		
Movement:	L -	T -	R	L -	T -	R	L -	T -	R	L -	T -	R
Control:	Stop Sign			Stop Sign			Stop Sign			Stop Sign		
Rights:	Include			Include			Include			Include		
Min. Green:	7	7	7	7	7	7	7	7	7	7	7	7
Lanes:	0 0	2 0	1	0 1	0 0	0	0 1	0 0	1	0 0	0 0	0
Volume Module:												
Base Vol:	0	322	176	3	562	0	6	212	203	0	0	0
Growth Adj:	1.00	1.00	1.00	1.00	1.00	1.00	1.00	1.00	1.00	1.00	1.00	1.00
Initial Bse:	0	322	176	3	562	0	6	212	203	0	0	0
Added Vol:	0	0	0	0	0	0	0	0	0	0	0	0
PasserByVol:	0	0	0	0	0	0	0	0	0	0	0	0
Initial Fut:	0	322	176	3	562	0	6	212	203	0	0	0
User Adj:	1.00	1.00	1.00	1.00	1.00	1.00	1.00	1.00	1.00	1.00	1.00	1.00
PHF Adj:	1.00	1.00	1.00	1.00	1.00	1.00	1.00	1.00	1.00	1.00	1.00	1.00
PHF Volume:	0	322	176	3	562	0	6	212	203	0	0	0
Reduct Vol:	0	0	0	0	0	0	0	0	0	0	0	0
Reduced Vol:	0	322	176	3	562	0	6	212	203	0	0	0
PCE Adj:	1.00	1.00	1.00	1.00	1.00	1.00	1.00	1.00	1.00	1.00	1.00	1.00
MLF Adj:	1.00	1.00	1.00	1.00	1.00	1.00	1.00	1.00	1.00	1.00	1.00	1.00
FinalVolume:	0	322	176	3	562	0	6	212	203	0	0	0
Saturation Flow Module:												
Adjustment:	1.00	1.00	1.00	1.00	1.00	1.00	1.00	1.00	1.00	1.00	1.00	1.00
Lanes:	0.00	2.00	1.00	0.01	0.99	0.00	0.03	0.97	1.00	0.00	0.00	0.00
Final Sat.:	0	1081	604	3	568	0	14	490	559	0	0	0
Capacity Analysis Module:												
Vol/Sat:	xxxx	0.30	0.29	0.99	0.99	xxxx	0.43	0.43	0.36	xxxx	xxxx	xxxx
Crit Moves:		****			****			****				
Delay/Veh:	0.0	12.0	10.9	59.8	59.8	0.0	14.8	14.8	12.5	0.0	0.0	0.0
Delay Adj:	1.00	1.00	1.00	1.00	1.00	1.00	1.00	1.00	1.00	1.00	1.00	1.00
AdjDel/Veh:	0.0	12.0	10.9	59.8	59.8	0.0	14.8	14.8	12.5	0.0	0.0	0.0
LOS by Move:	*	B	B	F	F	*	B	B	B	*	*	*
ApproachDel:		11.6			59.8			13.7			xxxxxx	
Delay Adj:		1.00			1.00			1.00			xxxxx	
ApprAdjDel:		11.6			59.8			13.7			xxxxxx	
LOS by Appr:		B			F			B			*	
AllWayAvgQ:	0.0	0.4	0.4	8.0	8.0	8.0	0.7	0.7	0.5	0.0	0.0	0.0

Overlook Parkway Extension
Existing
PM Peak Hour

Note: Queue reported is the number of cars per lane.

Overlook Parkway Extension
Existing
PM Peak Hour

Level Of Service Computation Report
2000 HCM 4-Way Stop Method (Future Volume Alternative)

Intersection #221 Mary St/Victoria Ave (North)

Cycle (sec): 100 Critical Vol./Cap.(X): 0.842
Loss Time (sec): 0 (Y+R=4.0 sec) Average Delay (sec/veh): 25.4
Optimal Cycle: 0 Level Of Service: D

Street Name:	Mary St						Victoria Ave (North)					
Approach:	North Bound			South Bound			East Bound			West Bound		
Movement:	L -	T -	R	L -	T -	R	L -	T -	R	L -	T -	R
Control:	Stop Sign			Stop Sign			Stop Sign			Stop Sign		
Rights:	Include			Include			Include			Include		
Min. Green:	7	7	7	7	7	7	7	7	7	7	7	7
Lanes:	0 1	0	0 0	0	0	0 1 0	0	0	0 0 0	0	0	1! 0 0
Volume Module:												
Base Vol:	6	178	0	0	304	247	0	0	0	129	286	79
Growth Adj:	1.00	1.00	1.00	1.00	1.00	1.00	1.00	1.00	1.00	1.00	1.00	1.00
Initial Bse:	6	178	0	0	304	247	0	0	0	129	286	79
Added Vol:	0	0	0	0	0	0	0	0	0	0	0	0
PasserByVol:	0	0	0	0	0	0	0	0	0	0	0	0
Initial Fut:	6	178	0	0	304	247	0	0	0	129	286	79
User Adj:	1.00	1.00	1.00	1.00	1.00	1.00	1.00	1.00	1.00	1.00	1.00	1.00
PHF Adj:	1.00	1.00	1.00	1.00	1.00	1.00	1.00	1.00	1.00	1.00	1.00	1.00
PHF Volume:	6	178	0	0	304	247	0	0	0	129	286	79
Reduct Vol:	0	0	0	0	0	0	0	0	0	0	0	0
Reduced Vol:	6	178	0	0	304	247	0	0	0	129	286	79
PCE Adj:	1.00	1.00	1.00	1.00	1.00	1.00	1.00	1.00	1.00	1.00	1.00	1.00
MLF Adj:	1.00	1.00	1.00	1.00	1.00	1.00	1.00	1.00	1.00	1.00	1.00	1.00
FinalVolume:	6	178	0	0	304	247	0	0	0	129	286	79
Saturation Flow Module:												
Adjustment:	1.00	1.00	1.00	1.00	1.00	1.00	1.00	1.00	1.00	1.00	1.00	1.00
Lanes:	0.03	0.97	0.00	0.00	0.55	0.45	0.00	0.00	0.00	0.26	0.58	0.16
Final Sat.:	18	523	0	0	361	293	0	0	0	160	356	98
Capacity Analysis Module:												
Vol/Sat:	0.34	0.34	xxxx	xxxx	0.84	0.84	xxxx	xxxx	xxxx	0.80	0.80	0.80
Crit Moves:		****			****						****	
Delay/Veh:	12.1	12.1	0.0	0.0	29.0	29.0	0.0	0.0	0.0	26.4	26.4	26.4
Delay Adj:	1.00	1.00	1.00	1.00	1.00	1.00	1.00	1.00	1.00	1.00	1.00	1.00
AdjDel/Veh:	12.1	12.1	0.0	0.0	29.0	29.0	0.0	0.0	0.0	26.4	26.4	26.4
LOS by Move:	B	B	*	*	D	D	*	*	*	D	D	D
ApproachDel:	12.1				29.0		xxxxxx			26.4		
Delay Adj:	1.00				1.00		xxxxx			1.00		
ApprAdjDel:	12.1				29.0		xxxxxx			26.4		
LOS by Appr:	B				D		*			D		
AllWayAvgQ:	0.4	0.4	0.4	3.7	3.7	3.7	0.0	0.0	0.0	3.0	3.0	3.0

Overlook Parkway Extension
Existing
PM Peak Hour

Note: Queue reported is the number of cars per lane.

Overlook Parkway Extension
Existing
PM Peak Hour

Level Of Service Computation Report
2000 HCM 4-Way Stop Method (Future Volume Alternative)

Intersection #222 Mary St/Victoria Ave (South)

Cycle (sec): 100 Critical Vol./Cap.(X): 0.626
Loss Time (sec): 0 (Y+R=4.0 sec) Average Delay (sec/veh): 13.4
Optimal Cycle: 0 Level Of Service: B

Street Name:	Mary St							Victoria Ave (South)					
Approach:	North Bound			South Bound				East Bound			West Bound		
Movement:	L	- T	- R	L	- T	- R		L	- T	- R	L	- T	- R
Control:	Stop Sign			Stop Sign				Stop Sign			Stop Sign		
Rights:	Include			Include				Include			Include		
Min. Green:	7	7	7	7	7	7		7	7	7	7	7	7
Lanes:	0 0	0 1	0	0 1	0 0	0		1 0	0 1	0	0 0	0 0	0
Volume Module:													
Base Vol:	0	79	60	74	359	0		105	245	10	0	0	0
Growth Adj:	1.00	1.00	1.00	1.00	1.00	1.00		1.00	1.00	1.00	1.00	1.00	1.00
Initial Bse:	0	79	60	74	359	0		105	245	10	0	0	0
Added Vol:	0	0	0	0	0	0		0	0	0	0	0	0
PasserByVol:	0	0	0	0	0	0		0	0	0	0	0	0
Initial Fut:	0	79	60	74	359	0		105	245	10	0	0	0
User Adj:	1.00	1.00	1.00	1.00	1.00	1.00		1.00	1.00	1.00	1.00	1.00	1.00
PHF Adj:	1.00	1.00	1.00	1.00	1.00	1.00		1.00	1.00	1.00	1.00	1.00	1.00
PHF Volume:	0	79	60	74	359	0		105	245	10	0	0	0
Reduct Vol:	0	0	0	0	0	0		0	0	0	0	0	0
Reduced Vol:	0	79	60	74	359	0		105	245	10	0	0	0
PCE Adj:	1.00	1.00	1.00	1.00	1.00	1.00		1.00	1.00	1.00	1.00	1.00	1.00
MLF Adj:	1.00	1.00	1.00	1.00	1.00	1.00		1.00	1.00	1.00	1.00	1.00	1.00
FinalVolume:	0	79	60	74	359	0		105	245	10	0	0	0
Saturation Flow Module:													
Adjustment:	1.00	1.00	1.00	1.00	1.00	1.00		1.00	1.00	1.00	1.00	1.00	1.00
Lanes:	0.00	0.57	0.43	0.17	0.83	0.00		1.00	0.96	0.04	0.00	0.00	0.00
Final Sat.:	0	374	284	118	574	0		545	568	23	0	0	0
Capacity Analysis Module:													
Vol/Sat:	xxxx	0.21	0.21	0.63	0.63	xxxx		0.19	0.43	0.43	xxxx	xxxx	xxxx
Crit Moves:			****		****				****				
Delay/Veh:	0.0	9.5	9.5	15.8	15.8	0.0		10.5	12.6	12.6	0.0	0.0	0.0
Delay Adj:	1.00	1.00	1.00	1.00	1.00	1.00		1.00	1.00	1.00	1.00	1.00	1.00
AdjDel/Veh:	0.0	9.5	9.5	15.8	15.8	0.0		10.5	12.6	12.6	0.0	0.0	0.0
LOS by Move:	*	A	A	C	C	*		B	B	B	*	*	*
ApproachDel:	9.5			15.8				12.0			xxxxxx		
Delay Adj:	1.00			1.00				1.00			xxxxx		
ApprAdjDel:	9.5			15.8				12.0			xxxxxx		
LOS by Appr:	A			C				B			*		
AllWayAvgQ:	0.2	0.2	0.2	1.5	1.5	1.5		0.2	0.7	0.7	0.0	0.0	0.0

Overlook Parkway Extension
Existing
PM Peak Hour

Note: Queue reported is the number of cars per lane.

APPENDIX C:
TRAFFIX WORKSHEETS
EXISTING CONDITIONS – GATES OPEN


```
Existing AM                Tue Jun 21, 2011 14:36:40                Page 1-1
-------------------------------------------------------------------------------
                          Overlook Parkway Extension
                                   Existing
                                 AM Peak Hour
-------------------------------------------------------------------------------
                                 Scenario Report
Scenario:             Existing AM

Command:              Existing AM
Volume:               Existing AM
Geometry:             Existing
Impact Fee:           Default Impact Fee
Trip Generation:      none
Trip Distribution:    none
Paths:                Default Path
Routes:               Default Route
Configuration:        Existing AM

Traffix 7.9.0215 (c) 2008 Dowling Assoc. Licensed to MMA, LONG BEACH, CA
```

Overlook Parkway Extension
Existing
AM Peak Hour

Impact Analysis Report
Level Of Service

Intersection	Base LOS	Base Del/ Veh	Base V/ C	Future LOS	Future Del/ Veh	Future V/ C	Change in
# 1 Madison St/SR-91 WB Ramps	C	27.9	0.585	C	27.9	0.585	+ 0.000 D/V
# 2 Madison St/SR-91 EB Ramps	C	27.9	0.498	C	27.9	0.498	+ 0.000 D/V
# 3 Madison St/Indiana Ave	D	37.7	0.773	D	37.7	0.773	+ 0.000 D/V
# 4 Madison St/Lincoln Ave	C	30.2	0.334	C	30.2	0.334	+ 0.000 D/V
# 6 Washington St/Indiana Ave	C	24.2	0.527	C	24.2	0.527	+ 0.000 D/V
# 7 Washington St/Lincoln Ave	C	21.9	0.853	C	21.9	0.853	+ 0.000 V/C
# 9 Washington St/Overlook Pkwy	B	16.2	0.343	B	16.2	0.343	+ 0.000 D/V
# 10 Riverside Ave-SR-91 WB/Arlingt	C	31.8	0.825	C	31.8	0.825	+ 0.000 D/V
# 11 Indiana Ave-SR-91 EB/Arlington	C	26.0	0.654	C	26.0	0.654	+ 0.000 D/V
# 12 Victoria Ave/Arlington Ave	D	45.4	0.960	D	45.4	0.960	+ 0.000 D/V
# 13 Alessandro Blvd/Arlington Ave	C	30.0	0.758	C	30.0	0.758	+ 0.000 D/V
# 14 Alessandro Blvd/Overlook Pkwy	C	21.5	0.757	C	21.5	0.757	+ 0.000 D/V
# 15 Alessandro Blvd/Trautwein Rd	C	31.3	0.807	C	31.3	0.807	+ 0.000 D/V
# 16 Crystal View Ter/Overlook Pkwy	A	7.4	0.108	A	7.4	0.108	+ 0.000 V/C
# 17 Kingdom Dr/Overlook Pkwy	A	9.6	0.000	A	9.6	0.000	+ 0.000 D/V
# 18 Kingdom Dr/Green Orchard Pl	A	8.5	0.000	A	8.5	0.000	+ 0.000 D/V
# 19 Trautwein Rd/John F. Kennedy D	C	32.8	0.848	C	32.8	0.848	+ 0.000 D/V
# 20 Washington St/Bradley St	C	20.8	0.626	C	20.8	0.626	+ 0.000 D/V
# 21 Alessandro Blvd/Via Vista Dr	C	24.0	0.824	C	24.0	0.824	+ 0.000 D/V
# 23 Mary St/Hawarden Dr	A	8.0	0.179	A	8.0	0.179	+ 0.000 V/C
# 24 Hawarden Dr/Overlook Pkwy	A	8.1	0.162	A	8.1	0.162	+ 0.000 V/C
# 25 Crystal View Ter/Berry Rd	A	7.5	0.164	A	7.5	0.164	+ 0.000 V/C
# 26 Corinthian Wy/Berry Rd	A	7.7	0.183	A	7.7	0.183	+ 0.000 V/C

Overlook Parkway Extension
Existing
AM Peak Hour

Intersection	Base LOS	Base Del/ Veh	Base V/ C	Future LOS	Future Del/ Veh	Future V/ C	Change in
# 28 Orozco Dr/Overlook Pkwy	A	9.8	0.000	A	9.8	0.000	+ 0.000 D/V
# 51 Madison St/Victoria Ave (North	A	9.7	0.405	A	9.7	0.405	+ 0.000 V/C
# 52 Madison St/Victoria Ave (South	A	9.5	0.401	A	9.5	0.401	+ 0.000 V/C
# 81 Washington St/Victoria Ave (No	B	13.7	0.527	B	13.7	0.527	+ 0.000 V/C
# 82 Washington St/Victoria Ave (So	B	13.7	0.520	B	13.7	0.520	+ 0.000 V/C
#221 Mary St/Victoria Ave (North)	C	16.3	0.678	C	16.3	0.678	+ 0.000 V/C
#222 Mary St/Victoria Ave (South)	B	12.3	0.522	B	12.3	0.522	+ 0.000 V/C

Overlook Parkway Extension
Existing
AM Peak Hour

Level Of Service Computation Report
2000 HCM Operations Method (Future Volume Alternative)

Intersection #1 Madison St/SR-91 WB Ramps

Cycle (sec): 100 Critical Vol./Cap.(X): 0.585
Loss Time (sec): 12 (Y+R=4.0 sec) Average Delay (sec/veh): 27.9
Optimal Cycle: 50 Level Of Service: C

Street Name:	Madison St						SR-91 WB Ramps					
Approach:	North Bound			South Bound			East Bound			West Bound		
Movement:	L	T	R	L	T	R	L	T	R	L	T	R
Control:	Protected			Protected			Split Phase			Split Phase		
Rights:	Include			Include			Include			Include		
Min. Green:	7	7	7	7	7	7	7	7	7	7	7	7
Lanes:	1 0	2 0	0	0 0	3 0	1	0 0	0 0	0	0 1	0 0	1
Volume Module:												
Base Vol:	351	643	0	0	476	249	0	0	0	284	5	223
Growth Adj:	1.00	1.00	1.00	1.00	1.00	1.00	1.00	1.00	1.00	1.00	1.00	1.00
Initial Bse:	351	643	0	0	476	249	0	0	0	284	5	223
Added Vol:	0	0	0	0	0	0	0	0	0	0	0	0
PasserByVol:	0	0	0	0	0	0	0	0	0	0	0	0
Initial Fut:	351	643	0	0	476	249	0	0	0	284	5	223
User Adj:	1.00	1.00	1.00	1.00	1.00	1.00	1.00	1.00	1.00	1.00	1.00	1.00
PHF Adj:	1.00	1.00	1.00	1.00	1.00	1.00	1.00	1.00	1.00	1.00	1.00	1.00
PHF Volume:	351	643	0	0	476	249	0	0	0	284	5	223
Reduct Vol:	0	0	0	0	0	0	0	0	0	0	0	0
Reduced Vol:	351	643	0	0	476	249	0	0	0	284	5	223
PCE Adj:	1.00	1.00	1.00	1.00	1.00	1.00	1.00	1.00	1.00	1.00	1.00	1.00
MLF Adj:	1.00	1.00	1.00	1.00	1.00	1.00	1.00	1.00	1.00	1.00	1.00	1.00
FinalVolume:	351	643	0	0	476	249	0	0	0	284	5	223
Saturation Flow Module:												
Sat/Lane:	1900	1900	1900	1900	1900	1900	1900	1900	1900	1900	1900	1900
Adjustment:	0.95	0.95	1.00	1.00	0.91	0.85	1.00	1.00	1.00	0.92	0.92	0.85
Lanes:	1.00	2.00	0.00	0.00	3.00	1.00	0.00	0.00	0.00	0.98	0.02	1.00
Final Sat.:	1805	3610	0	0	5187	1615	0	0	0	1712	30	1615
Capacity Analysis Module:												
Vol/Sat:	0.19	0.18	0.00	0.00	0.09	0.15	0.00	0.00	0.00	0.17	0.17	0.14
Crit Moves:	****					****				****		
Green/Cycle:	0.33	0.43	0.00	0.00	0.26	0.26	0.00	0.00	0.00	0.28	0.28	0.28
Volume/Cap:	0.58	0.42	0.00	0.00	0.35	0.58	0.00	0.00	0.00	0.58	0.58	0.49
Delay/Veh:	29.1	20.1	0.0	0.0	30.0	34.1	0.0	0.0	0.0	32.6	32.6	30.6
User DelAdj:	1.00	1.00	1.00	1.00	1.00	1.00	1.00	1.00	1.00	1.00	1.00	1.00
AdjDel/Veh:	29.1	20.1	0.0	0.0	30.0	34.1	0.0	0.0	0.0	32.6	32.6	30.6
LOS by Move:	C	C	A	A	C	C	A	A	A	C	C	C
HCM2kAvgQ:	9	7	0	0	4	7	0	0	0	8	8	6

Note: Queue reported is the number of cars per lane.

Traffix 7.9.0215 (c) 2008 Dowling Assoc. Licensed to MMA, LONG BEACH, CA

Overlook Parkway Extension
Existing
AM Peak Hour

Level Of Service Computation Report
2000 HCM Operations Method (Future Volume Alternative)

Intersection #2 Madison St/SR-91 EB Ramps

Cycle (sec): 100 Critical Vol./Cap.(X): 0.498
Loss Time (sec): 12 (Y+R=4.0 sec) Average Delay (sec/veh): 27.9
Optimal Cycle: 50 Level Of Service: C

Street Name:	Madison St						SR-91 EB Ramps					
Approach:	North Bound			South Bound			East Bound			West Bound		
Movement:	L	T	R	L	T	R	L	T	R	L	T	R
Control:	Protected			Protected			Protected			Protected		
Rights:	Include			Include			Include			Include		
Min. Green:	7	7	7	7	7	7	7	7	7	7	7	7
Lanes:	0 0	3 0	1	1 0	2 0	0	0 1	0 0	1	0 0	0 0	0
Volume Module:												
Base Vol:	0	776	251	202	547	0	225	13	276	0	0	0
Growth Adj:	1.00	1.00	1.00	1.00	1.00	1.00	1.00	1.00	1.00	1.00	1.00	1.00
Initial Bse:	0	776	251	202	547	0	225	13	276	0	0	0
Added Vol:	0	0	0	0	0	0	0	0	0	0	0	0
PasserByVol:	0	0	0	0	0	0	0	0	0	0	0	0
Initial Fut:	0	776	251	202	547	0	225	13	276	0	0	0
User Adj:	1.00	1.00	1.00	1.00	1.00	1.00	1.00	1.00	1.00	1.00	1.00	1.00
PHF Adj:	1.00	1.00	1.00	1.00	1.00	1.00	1.00	1.00	1.00	1.00	1.00	1.00
PHF Volume:	0	776	251	202	547	0	225	13	276	0	0	0
Reduct Vol:	0	0	0	0	0	0	0	0	0	0	0	0
Reduced Vol:	0	776	251	202	547	0	225	13	276	0	0	0
PCE Adj:	1.00	1.00	1.00	1.00	1.00	1.00	1.00	1.00	1.00	1.00	1.00	1.00
MLF Adj:	1.00	1.00	1.00	1.00	1.00	1.00	1.00	1.00	1.00	1.00	1.00	1.00
FinalVolume:	0	776	251	202	547	0	225	13	276	0	0	0
Saturation Flow Module:												
Sat/Lane:	1900	1900	1900	1900	1900	1900	1900	1900	1900	1900	1900	1900
Adjustment:	1.00	0.91	0.85	0.95	0.95	1.00	0.93	0.93	0.85	1.00	1.00	1.00
Lanes:	0.00	3.00	1.00	1.00	2.00	0.00	0.95	0.05	1.00	0.00	0.00	0.00
Final Sat.:	0	5187	1615	1805	3610	0	1678	97	1615	0	0	0
Capacity Analysis Module:												
Vol/Sat:	0.00	0.15	0.16	0.11	0.15	0.00	0.13	0.13	0.17	0.00	0.00	0.00
Crit Moves:			****	****					****			
Green/Cycle:	0.00	0.31	0.31	0.22	0.37	0.00	0.27	0.34	0.34	0.00	0.00	0.00
Volume/Cap:	0.00	0.48	0.50	0.50	0.41	0.00	0.49	0.39	0.50	0.00	0.00	0.00
Delay/Veh:	0.0	28.0	28.8	34.8	23.8	0.0	31.4	25.3	26.7	0.0	0.0	0.0
User DelAdj:	1.00	1.00	1.00	1.00	1.00	1.00	1.00	1.00	1.00	1.00	1.00	1.00
AdjDel/Veh:	0.0	28.0	28.8	34.8	23.8	0.0	31.4	25.3	26.7	0.0	0.0	0.0
LOS by Move:	A	C	C	C	C	A	C	C	C	A	A	A
HCM2kAvgQ:	0	7	7	6	7	0	7	6	7	0	0	0

Note: Queue reported is the number of cars per lane.

Traffix 7.9.0215 (c) 2008 Dowling Assoc. Licensed to MMA, LONG BEACH, CA

Overlook Parkway Extension
Existing
AM Peak Hour

Level Of Service Computation Report
2000 HCM Operations Method (Future Volume Alternative)

Intersection #3 Madison St/Indiana Ave

Cycle (sec):	100	Critical Vol./Cap.(X):	0.773
Loss Time (sec):	16 (Y+R=4.0 sec)	Average Delay (sec/veh):	37.7
Optimal Cycle:	81	Level Of Service:	D

Street Name:	Madison St						Indiana Ave					
Approach:	North Bound			South Bound			East Bound			West Bound		
Movement:	L -	T -	R	L -	T -	R	L -	T -	R	L -	T -	R
Control:	Protected			Protected			Protected			Protected		
Rights:	Include			Include			Include			Include		
Min. Green:	7	7	7	7	7	7	7	7	7	7	7	7
Lanes:	1 0	1 1	0	1 0	1 1	0	1 0	1 1	0	1 0	1 1	0
Volume Module:												
Base Vol:	37	481	26	312	294	137	153	463	27	13	158	403
Growth Adj:	1.00	1.00	1.00	1.00	1.00	1.00	1.00	1.00	1.00	1.00	1.00	1.00
Initial Bse:	37	481	26	312	294	137	153	463	27	13	158	403
Added Vol:	0	0	0	0	0	0	0	0	0	0	0	0
PasserByVol:	0	0	0	0	0	0	0	0	0	0	0	0
Initial Fut:	37	481	26	312	294	137	153	463	27	13	158	403
User Adj:	1.00	1.00	1.00	1.00	1.00	1.00	1.00	1.00	1.00	1.00	1.00	1.00
PHF Adj:	1.00	1.00	1.00	1.00	1.00	1.00	1.00	1.00	1.00	1.00	1.00	1.00
PHF Volume:	37	481	26	312	294	137	153	463	27	13	158	403
Reduct Vol:	0	0	0	0	0	0	0	0	0	0	0	0
Reduced Vol:	37	481	26	312	294	137	153	463	27	13	158	403
PCE Adj:	1.00	1.00	1.00	1.00	1.00	1.00	1.00	1.00	1.00	1.00	1.00	1.00
MLF Adj:	1.00	1.00	1.00	1.00	1.00	1.00	1.00	1.00	1.00	1.00	1.00	1.00
FinalVolume:	37	481	26	312	294	137	153	463	27	13	158	403
Saturation Flow Module:												
Sat/Lane:	1900	1900	1900	1900	1900	1900	1900	1900	1900	1900	1900	1900
Adjustment:	0.95	0.94	0.94	0.95	0.90	0.90	0.95	0.94	0.94	0.95	0.85	0.85
Lanes:	1.00	1.90	0.10	1.00	1.36	0.64	1.00	1.89	0.11	1.00	1.00	1.00
Final Sat.:	1805	3397	184	1805	2344	1092	1805	3384	197	1805	1610	1610
Capacity Analysis Module:												
Vol/Sat:	0.02	0.14	0.14	0.17	0.13	0.13	0.08	0.14	0.14	0.01	0.10	0.25
Crit Moves:		****		****			****					****
Green/Cycle:	0.15	0.18	0.18	0.22	0.26	0.26	0.11	0.29	0.29	0.15	0.32	0.32
Volume/Cap:	0.14	0.77	0.77	0.77	0.48	0.48	0.77	0.48	0.48	0.05	0.30	0.77
Delay/Veh:	37.5	44.6	44.6	45.4	31.6	31.6	60.4	29.8	29.8	36.8	25.4	35.7
User DelAdj:	1.00	1.00	1.00	1.00	1.00	1.00	1.00	1.00	1.00	1.00	1.00	1.00
AdjDel/Veh:	37.5	44.6	44.6	45.4	31.6	31.6	60.4	29.8	29.8	36.8	25.4	35.7
LOS by Move:	D	D	D	D	C	C	E	C	C	D	C	D
HCM2kAvgQ:	1	10	10	11	6	6	7	7	7	0	4	14

Note: Queue reported is the number of cars per lane.

Traffix 7.9.0215 (c) 2008 Dowling Assoc. Licensed to MMA, LONG BEACH, CA

Overlook Parkway Extension
Existing
AM Peak Hour

Level Of Service Computation Report
2000 HCM Operations Method (Future Volume Alternative)

Intersection #4 Madison St/Lincoln Ave

Cycle (sec):	100	Critical Vol./Cap.(X):	0.334
Loss Time (sec):	16 (Y+R=4.0 sec)	Average Delay (sec/veh):	30.2
Optimal Cycle:	50	Level Of Service:	C

Street Name:	Madison St						Lincoln Ave					
Approach:	North Bound			South Bound			East Bound			West Bound		
Movement:	L -	T -	R	L -	T -	R	L -	T -	R	L -	T -	R
Control:	Protected			Protected			Protected			Protected		
Rights:	Include			Include			Include			Include		
Min. Green:	7	7	7	7	7	7	7	7	7	7	7	7
Lanes:	1 0	0 1	0	1 0	0 1	0	1 0	0 1	0	1 0	1 1	0
Volume Module:												
Base Vol:	22	234	5	51	91	82	98	218	12	7	182	106
Growth Adj:	1.00	1.00	1.00	1.00	1.00	1.00	1.00	1.00	1.00	1.00	1.00	1.00
Initial Bse:	22	234	5	51	91	82	98	218	12	7	182	106
Added Vol:	0	0	0	0	0	0	0	0	0	0	0	0
PasserByVol:	0	0	0	0	0	0	0	0	0	0	0	0
Initial Fut:	22	234	5	51	91	82	98	218	12	7	182	106
User Adj:	1.00	1.00	1.00	1.00	1.00	1.00	1.00	1.00	1.00	1.00	1.00	1.00
PHF Adj:	1.00	1.00	1.00	1.00	1.00	1.00	1.00	1.00	1.00	1.00	1.00	1.00
PHF Volume:	22	234	5	51	91	82	98	218	12	7	182	106
Reduct Vol:	0	0	0	0	0	0	0	0	0	0	0	0
Reduced Vol:	22	234	5	51	91	82	98	218	12	7	182	106
PCE Adj:	1.00	1.00	1.00	1.00	1.00	1.00	1.00	1.00	1.00	1.00	1.00	1.00
MLF Adj:	1.00	1.00	1.00	1.00	1.00	1.00	1.00	1.00	1.00	1.00	1.00	1.00
FinalVolume:	22	234	5	51	91	82	98	218	12	7	182	106
Saturation Flow Module:												
Sat/Lane:	1900	1900	1900	1900	1900	1900	1900	1900	1900	1900	1900	1900
Adjustment:	0.95	1.00	1.00	0.95	0.93	0.93	0.95	0.99	0.99	0.95	0.90	0.90
Lanes:	1.00	0.98	0.02	1.00	0.53	0.47	1.00	0.95	0.05	1.00	1.26	0.74
Final Sat.:	1805	1855	40	1805	928	837	1805	1786	98	1805	2156	1256
Capacity Analysis Module:												
Vol/Sat:	0.01	0.13	0.13	0.03	0.10	0.10	0.05	0.12	0.12	0.00	0.08	0.08
Crit Moves:		****		****				****		****		
Green/Cycle:	0.18	0.35	0.35	0.08	0.25	0.25	0.19	0.34	0.34	0.07	0.22	0.22
Volume/Cap:	0.07	0.36	0.36	0.36	0.39	0.39	0.29	0.36	0.36	0.06	0.38	0.38
Delay/Veh:	34.2	24.4	24.4	45.2	31.7	31.7	35.5	25.2	25.2	43.6	33.2	33.2
User DelAdj:	1.00	1.00	1.00	1.00	1.00	1.00	1.00	1.00	1.00	1.00	1.00	1.00
AdjDel/Veh:	34.2	24.4	24.4	45.2	31.7	31.7	35.5	25.2	25.2	43.6	33.2	33.2
LOS by Move:	C	C	C	D	C	C	D	C	C	D	C	C
HCM2kAvgQ:	1	5	5	2	5	5	3	5	5	0	4	4

Note: Queue reported is the number of cars per lane.

Traffix 7.9.0215 (c) 2008 Dowling Assoc. Licensed to MMA, LONG BEACH, CA

Overlook Parkway Extension
Existing
AM Peak Hour

Level Of Service Computation Report
2000 HCM Operations Method (Future Volume Alternative)

Intersection #6 Washington St/Indiana Ave

Cycle (sec): 100 Critical Vol./Cap.(X): 0.527
Loss Time (sec): 12 (Y+R=4.0 sec) Average Delay (sec/veh): 24.2
Optimal Cycle: 50 Level Of Service: C

Street Name:	Washington St						Indiana Ave					
Approach:	North Bound			South Bound			East Bound			West Bound		
Movement:	L	T	R	L	T	R	L	T	R	L	T	R
Control:	Permitted			Permitted			Protected			Protected		
Rights:	Ovl			Include			Include			Include		
Min. Green:	7	7	7	7	7	7	7	7	7	7	7	7
Lanes:	1 0	0 1	0	1 0	0 1	0	1 0	1 1	0	1 0	1 1	0
Volume Module:												
Base Vol:	281	5	305	3	0	2	9	722	74	87	334	10
Growth Adj:	1.00	1.00	1.00	1.00	1.00	1.00	1.00	1.00	1.00	1.00	1.00	1.00
Initial Bse:	281	5	305	3	0	2	9	722	74	87	334	10
Added Vol:	0	0	0	0	0	0	0	0	0	0	0	0
PasserByVol:	0	0	0	0	0	0	0	0	0	0	0	0
Initial Fut:	281	5	305	3	0	2	9	722	74	87	334	10
User Adj:	1.00	1.00	1.00	1.00	1.00	1.00	1.00	1.00	1.00	1.00	1.00	1.00
PHF Adj:	1.00	1.00	1.00	1.00	1.00	1.00	1.00	1.00	1.00	1.00	1.00	1.00
PHF Volume:	281	5	305	3	0	2	9	722	74	87	334	10
Reduct Vol:	0	0	0	0	0	0	0	0	0	0	0	0
Reduced Vol:	281	5	305	3	0	2	9	722	74	87	334	10
PCE Adj:	1.00	1.00	1.00	1.00	1.00	1.00	1.00	1.00	1.00	1.00	1.00	1.00
MLF Adj:	1.00	1.00	1.00	1.00	1.00	1.00	1.00	1.00	1.00	1.00	1.00	1.00
FinalVolume:	281	5	305	3	0	2	9	722	74	87	334	10
Saturation Flow Module:												
Sat/Lane:	1900	1900	1900	1900	1900	1900	1900	1900	1900	1900	1900	1900
Adjustment:	0.77	0.85	0.85	0.42	1.00	0.85	0.95	0.94	0.94	0.95	0.95	0.95
Lanes:	1.00	0.02	0.98	1.00	0.00	1.00	1.00	1.81	0.19	1.00	1.94	0.06
Final Sat.:	1457	26	1593	804	0	1615	1805	3229	331	1805	3491	105
Capacity Analysis Module:												
Vol/Sat:	0.19	0.19	0.19	0.00	0.00	0.00	0.00	0.22	0.22	0.05	0.10	0.10
Crit Moves:		****						****		****		
Green/Cycle:	0.36	0.36	0.46	0.36	0.00	0.36	0.22	0.42	0.42	0.09	0.30	0.30
Volume/Cap:	0.53	0.53	0.42	0.01	0.00	0.00	0.02	0.53	0.53	0.53	0.32	0.32
Delay/Veh:	26.1	25.9	18.7	20.3	0.0	20.3	30.7	21.7	21.7	46.5	27.4	27.4
User DelAdj:	1.00	1.00	1.00	1.00	1.00	1.00	1.00	1.00	1.00	1.00	1.00	1.00
AdjDel/Veh:	26.1	25.9	18.7	20.3	0.0	20.3	30.7	21.7	21.7	46.5	27.4	27.4
LOS by Move:	C	C	B	C	A	C	C	C	C	D	C	C
HCM2kAvgQ:	7	8	7	0	0	0	0	10	10	3	4	4

Note: Queue reported is the number of cars per lane.

Traffix 7.9.0215 (c) 2008 Dowling Assoc. Licensed to MMA, LONG BEACH, CA

Overlook Parkway Extension
Existing
AM Peak Hour

Level Of Service Computation Report
2000 HCM 4-Way Stop Method (Future Volume Alternative)

Intersection #7 Washington St/Lincoln Ave

Cycle (sec): 100 Critical Vol./Cap.(X): 0.853
Loss Time (sec): 0 (Y+R=4.0 sec) Average Delay (sec/veh): 21.9
Optimal Cycle: 0 Level Of Service: C

Street Name:	Washington St						Lincoln Ave					
Approach:	North Bound			South Bound			East Bound			West Bound		
Movement:	L	T	R	L	T	R	L	T	R	L	T	R
Control:	Stop Sign			Stop Sign			Stop Sign			Stop Sign		
Rights:	Include			Include			Include			Include		
Min. Green:	7	7	7	7	7	7	7	7	7	7	7	7
Lanes:	0 0	1! 0	0	0 0	1! 0	0	0 0	1! 0	0	0 1	0 0	1
Volume Module:												
Base Vol:	26	448	16	53	116	20	21	253	9	17	210	92
Growth Adj:	1.00	1.00	1.00	1.00	1.00	1.00	1.00	1.00	1.00	1.00	1.00	1.00
Initial Bse:	26	448	16	53	116	20	21	253	9	17	210	92
Added Vol:	0	0	0	0	0	0	0	0	0	0	0	0
PasserByVol:	0	0	0	0	0	0	0	0	0	0	0	0
Initial Fut:	26	448	16	53	116	20	21	253	9	17	210	92
User Adj:	1.00	1.00	1.00	1.00	1.00	1.00	1.00	1.00	1.00	1.00	1.00	1.00
PHF Adj:	1.00	1.00	1.00	1.00	1.00	1.00	1.00	1.00	1.00	1.00	1.00	1.00
PHF Volume:	26	448	16	53	116	20	21	253	9	17	210	92
Reduct Vol:	0	0	0	0	0	0	0	0	0	0	0	0
Reduced Vol:	26	448	16	53	116	20	21	253	9	17	210	92
PCE Adj:	1.00	1.00	1.00	1.00	1.00	1.00	1.00	1.00	1.00	1.00	1.00	1.00
MLF Adj:	1.00	1.00	1.00	1.00	1.00	1.00	1.00	1.00	1.00	1.00	1.00	1.00
FinalVolume:	26	448	16	53	116	20	21	253	9	17	210	92
Saturation Flow Module:												
Adjustment:	1.00	1.00	1.00	1.00	1.00	1.00	1.00	1.00	1.00	1.00	1.00	1.00
Lanes:	0.05	0.92	0.03	0.28	0.61	0.11	0.07	0.90	0.03	0.07	0.93	1.00
Final Sat.:	30	525	19	134	293	51	37	444	16	35	433	518
Capacity Analysis Module:												
Vol/Sat:	0.85	0.85	0.85	0.40	0.40	0.40	0.57	0.57	0.57	0.48	0.48	0.18
Crit Moves:		****			****				****		****	
Delay/Veh:	33.0	33.0	33.0	13.5	13.5	13.5	17.1	17.1	17.1	15.7	15.7	10.4
Delay Adj:	1.00	1.00	1.00	1.00	1.00	1.00	1.00	1.00	1.00	1.00	1.00	1.00
AdjDel/Veh:	33.0	33.0	33.0	13.5	13.5	13.5	17.1	17.1	17.1	15.7	15.7	10.4
LOS by Move:	D	D	D	B	B	B	C	C	C	C	C	B
ApproachDel:	33.0			13.5			17.1			14.2		
Delay Adj:	1.00			1.00			1.00			1.00		
ApprAdjDel:	33.0			13.5			17.1			14.2		
LOS by Appr:	D			B			C			B		
AllWayAvgQ:	3.8	3.8	3.8	0.5	0.5	0.5	1.0	1.0	1.0	0.8	0.8	0.2

Traffix 7.9.0215 (c) 2008 Dowling Assoc. Licensed to MMA, LONG BEACH, CA

Overlook Parkway Extension
Existing
AM Peak Hour

Note: Queue reported is the number of cars per lane.

Overlook Parkway Extension
Existing
AM Peak Hour

Level Of Service Computation Report
2000 HCM Operations Method (Future Volume Alternative)

Intersection #9 Washington St/Overlook Pkwy

Cycle (sec):	100	Critical Vol./Cap.(X):	0.343
Loss Time (sec):	12 (Y+R=4.0 sec)	Average Delay (sec/veh):	16.2
Optimal Cycle:	50	Level Of Service:	B

Street Name:	Washington St						Overlook Pkwy					
Approach:	North Bound			South Bound			East Bound			West Bound		
Movement:	L - T - R			L - T - R			L - T - R			L - T - R		
Control:	Protected			Protected			Protected			Protected		
Rights:	Include			Include			Include			Ovl		
Min. Green:	7	7	7	7	7	7	7	7	7	7	7	7
Lanes:	0 0	1 1	0	1 0	2 0	0	0 0	0 0	0	1 0	0 0	1
Volume Module:												
Base Vol:	0	887	9	84	262	0	0	0	0	12	0	208
Growth Adj:	1.00	1.00	1.00	1.00	1.00	1.00	1.00	1.00	1.00	1.00	1.00	1.00
Initial Bse:	0	887	9	84	262	0	0	0	0	12	0	208
Added Vol:	0	0	0	0	0	0	0	0	0	0	0	0
PasserByVol:	0	0	0	0	0	0	0	0	0	0	0	0
Initial Fut:	0	887	9	84	262	0	0	0	0	12	0	208
User Adj:	1.00	1.00	1.00	1.00	1.00	1.00	1.00	1.00	1.00	1.00	1.00	1.00
PHF Adj:	1.00	1.00	1.00	1.00	1.00	1.00	1.00	1.00	1.00	1.00	1.00	1.00
PHF Volume:	0	887	9	84	262	0	0	0	0	12	0	208
Reduct Vol:	0	0	0	0	0	0	0	0	0	0	0	0
Reduced Vol:	0	887	9	84	262	0	0	0	0	12	0	208
PCE Adj:	1.00	1.00	1.00	1.00	1.00	1.00	1.00	1.00	1.00	1.00	1.00	1.00
MLF Adj:	1.00	1.00	1.00	1.00	1.00	1.00	1.00	1.00	1.00	1.00	1.00	1.00
FinalVolume:	0	887	9	84	262	0	0	0	0	12	0	208
Saturation Flow Module:												
Sat/Lane:	1900	1900	1900	1900	1900	1900	1900	1900	1900	1900	1900	1900
Adjustment:	1.00	0.95	0.95	0.95	0.95	1.00	1.00	1.00	1.00	0.95	1.00	0.85
Lanes:	0.00	1.98	0.02	1.00	2.00	0.00	0.00	0.00	0.00	1.00	0.00	1.00
Final Sat.:	0	3570	36	1805	3610	0	0	0	0	1805	0	1615
Capacity Analysis Module:												
Vol/Sat:	0.00	0.25	0.25	0.05	0.07	0.00	0.00	0.00	0.00	0.01	0.00	0.13
Crit Moves:		****		****						****		
Green/Cycle:	0.00	0.68	0.68	0.13	0.41	0.00	0.00	0.00	0.00	0.07	0.00	0.20
Volume/Cap:	0.00	0.36	0.36	0.36	0.18	0.00	0.00	0.00	0.00	0.09	0.00	0.65
Delay/Veh:	0.0	6.8	6.8	40.9	18.7	0.0	0.0	0.0	0.0	43.9	0.0	41.7
User DelAdj:	1.00	1.00	1.00	1.00	1.00	1.00	1.00	1.00	1.00	1.00	1.00	1.00
AdjDel/Veh:	0.0	6.8	6.8	40.9	18.7	0.0	0.0	0.0	0.0	43.9	0.0	41.7
LOS by Move:	A	A	A	D	B	A	A	A	A	D	A	D
HCM2kAvgQ:	0	6	6	3	3	0	0	0	0	0	0	7

Note: Queue reported is the number of cars per lane.

Overlook Parkway Extension
Existing
AM Peak Hour

Level Of Service Computation Report
2000 HCM Operations Method (Future Volume Alternative)

Intersection #10 Riverside Ave-SR-91 WB/Arlington Ave

Cycle (sec): 100 Critical Vol./Cap.(X): 0.825
Loss Time (sec): 12 (Y+R=4.0 sec) Average Delay (sec/veh): 31.8
Optimal Cycle: 83 Level Of Service: C

Street Name:	Riverside Ave-SR-91 WB						Arlington Ave					
Approach:	North Bound			South Bound			East Bound			West Bound		
Movement:	L - T - R			L - T - R			L - T - R			L - T - R		
Control:	Protected			Protected			Protected			Protected		
Rights:	Include			Ovl			Ignore			Ignore		
Min. Green:	7	7	7	7	7	7	7	7	7	7	7	7
Lanes:	0 0	0 0	0	1 1	0 0	1	1 0	3 0	1	1 0	2 0	1
Volume Module:												
Base Vol:	0	0	0	488	48	539	80	795	143	511	937	274
Growth Adj:	1.00	1.00	1.00	1.00	1.00	1.00	1.00	1.00	1.00	1.00	1.00	1.00
Initial Bse:	0	0	0	488	48	539	80	795	143	511	937	274
Added Vol:	0	0	0	0	0	0	0	0	0	0	0	0
PasserByVol:	0	0	0	0	0	0	0	0	0	0	0	0
Initial Fut:	0	0	0	488	48	539	80	795	143	511	937	274
User Adj:	1.00	1.00	1.00	1.00	1.00	1.00	1.00	1.00	0.00	1.00	1.00	0.00
PHF Adj:	1.00	1.00	1.00	1.00	1.00	1.00	1.00	1.00	0.00	1.00	1.00	0.00
PHF Volume:	0	0	0	488	48	539	80	795	0	511	937	0
Reduct Vol:	0	0	0	0	0	0	0	0	0	0	0	0
Reduced Vol:	0	0	0	488	48	539	80	795	0	511	937	0
PCE Adj:	1.00	1.00	1.00	1.00	1.00	1.00	1.00	1.00	0.00	1.00	1.00	0.00
MLF Adj:	1.00	1.00	1.00	1.00	1.00	1.00	1.00	1.00	0.00	1.00	1.00	0.00
FinalVolume:	0	0	0	488	48	539	80	795	0	511	937	0
Saturation Flow Module:												
Sat/Lane:	1900	1900	1900	1900	1900	1900	1900	1900	1900	1900	1900	1900
Adjustment:	1.00	1.00	1.00	0.93	0.93	0.85	0.95	0.91	1.00	0.95	0.95	1.00
Lanes:	0.00	0.00	0.00	1.82	0.18	1.00	1.00	3.00	1.00	1.00	2.00	1.00
Final Sat.:	0	0	0	3224	317	1615	1805	5187	1900	1805	3610	1900
Capacity Analysis Module:												
Vol/Sat:	0.00	0.00	0.00	0.15	0.15	0.33	0.04	0.15	0.00	0.28	0.26	0.00
Crit Moves:						****		****		****		
Green/Cycle:	0.00	0.00	0.00	0.27	0.33	0.45	0.12	0.19	0.00	0.36	0.43	0.00
Volume/Cap:	0.00	0.00	0.00	0.55	0.46	0.74	0.38	0.80	0.00	0.80	0.60	0.00
Delay/Veh:	0.0	0.0	0.0	31.7	26.6	27.1	42.0	43.0	0.0	35.8	22.4	0.0
User DelAdj:	1.00	1.00	1.00	1.00	1.00	1.00	1.00	1.00	1.00	1.00	1.00	1.00
AdjDel/Veh:	0.0	0.0	0.0	31.7	26.6	27.1	42.0	43.0	0.0	35.8	22.4	0.0
LOS by Move:	A	A	A	C	C	C	D	D	A	D	C	A
HCM2kAvgQ:	0	0	0	8	7	15	3	11	0	16	12	0

Note: Queue reported is the number of cars per lane.

Traffix 7.9.0215 (c) 2008 Dowling Assoc. Licensed to MMA, LONG BEACH, CA

Overlook Parkway Extension
Existing
AM Peak Hour

Level Of Service Computation Report
2000 HCM Operations Method (Future Volume Alternative)

Intersection #11 Indiana Ave-SR-91 EB/Arlington Ave

Cycle (sec): 100 Critical Vol./Cap.(X): 0.654
Loss Time (sec): 12 (Y+R=4.0 sec) Average Delay (sec/veh): 26.0
Optimal Cycle: 54 Level Of Service: C

Street Name:	Indiana Ave-SR-91 EB						Arlington Ave					
Approach:	North Bound			South Bound			East Bound			West Bound		
Movement:	L - T - R			L - T - R			L - T - R			L - T - R		
Control:	Protected			Protected			Protected			Protected		
Rights:	Ovl			Include			Ovl			Ignore		
Min. Green:	7	7	7	7	7	7	7	7	7	7	7	7
Lanes:	1 1	1 0	1	0 0	0 0	0	1 0	2 0	1	1 0	4 0	1
Volume Module:												
Base Vol:	179	417	415	0	0	0	268	798	184	106	1582	430
Growth Adj:	1.00	1.00	1.00	1.00	1.00	1.00	1.00	1.00	1.00	1.00	1.00	1.00
Initial Bse:	179	417	415	0	0	0	268	798	184	106	1582	430
Added Vol:	0	0	0	0	0	0	0	0	0	0	0	0
PasserByVol:	0	0	0	0	0	0	0	0	0	0	0	0
Initial Fut:	179	417	415	0	0	0	268	798	184	106	1582	430
User Adj:	1.00	1.00	1.00	1.00	1.00	1.00	1.00	1.00	1.00	1.00	1.00	0.00
PHF Adj:	1.00	1.00	1.00	1.00	1.00	1.00	1.00	1.00	1.00	1.00	1.00	0.00
PHF Volume:	179	417	415	0	0	0	268	798	184	106	1582	0
Reduct Vol:	0	0	0	0	0	0	0	0	0	0	0	0
Reduced Vol:	179	417	415	0	0	0	268	798	184	106	1582	0
PCE Adj:	1.00	1.00	1.00	1.00	1.00	1.00	1.00	1.00	1.00	1.00	1.00	0.00
MLF Adj:	1.00	1.00	1.00	1.00	1.00	1.00	1.00	1.00	1.00	1.00	1.00	0.00
FinalVolume:	179	417	415	0	0	0	268	798	184	106	1582	0
Saturation Flow Module:												
Sat/Lane:	1900	1900	1900	1900	1900	1900	1900	1900	1900	1900	1900	1900
Adjustment:	0.92	0.92	0.85	1.00	1.00	1.00	0.95	0.95	0.85	0.95	0.91	1.00
Lanes:	1.00	2.00	1.00	0.00	0.00	0.00	1.00	2.00	1.00	1.00	4.00	1.00
Final Sat.:	1756	3513	1615	0	0	0	1805	3610	1615	1805	6916	1900
Capacity Analysis Module:												
Vol/Sat:	0.10	0.12	0.26	0.00	0.00	0.00	0.15	0.22	0.11	0.06	0.23	0.00
Crit Moves:			****				****				****	
Green/Cycle:	0.21	0.29	0.43	0.00	0.00	0.00	0.23	0.45	0.66	0.14	0.36	0.00
Volume/Cap:	0.48	0.41	0.59	0.00	0.00	0.00	0.64	0.49	0.17	0.41	0.64	0.00
Delay/Veh:	34.6	28.7	23.0	0.0	0.0	0.0	38.0	19.9	6.6	40.2	27.4	0.0
User DelAdj:	1.00	1.00	1.00	1.00	1.00	1.00	1.00	1.00	1.00	1.00	1.00	1.00
AdjDel/Veh:	34.6	28.7	23.0	0.0	0.0	0.0	38.0	19.9	6.6	40.2	27.4	0.0
LOS by Move:	C	C	C	A	A	A	D	B	A	D	C	A
HCM2kAvgQ:	5	6	10	0	0	0	8	9	2	3	12	0

Note: Queue reported is the number of cars per lane.

Traffix 7.9.0215 (c) 2008 Dowling Assoc. Licensed to MMA, LONG BEACH, CA

Overlook Parkway Extension
Existing
AM Peak Hour

Level Of Service Computation Report
2000 HCM Operations Method (Future Volume Alternative)

Intersection #12 Victoria Ave/Arlington Ave

Cycle (sec): 100 Critical Vol./Cap.(X): 0.960
Loss Time (sec): 16 (Y+R=4.0 sec) Average Delay (sec/veh): 45.4
Optimal Cycle: 130 Level Of Service: D

Street Name:	Victoria Ave						Arlington Ave					
Approach:	North Bound			South Bound			East Bound			West Bound		
Movement:	L -	T -	R	L -	T -	R	L -	T -	R	L -	T -	R
Control:	Protected			Protected			Protected			Protected		
Rights:	Ovl			Include			Include			Include		
Min. Green:	7	7	7	7	7	7	7	7	7	7	7	7
Lanes:	1 0	1 0	1	1 0	1 0	1	1 0	1 1	0	1 0	1 1	0
Volume Module:												
Base Vol:	27	400	381	138	270	130	146	779	6	355	1353	200
Growth Adj:	1.00	1.00	1.00	1.00	1.00	1.00	1.00	1.00	1.00	1.00	1.00	1.00
Initial Bse:	27	400	381	138	270	130	146	779	6	355	1353	200
Added Vol:	0	0	0	0	0	0	0	0	0	0	0	0
PasserByVol:	0	0	0	0	0	0	0	0	0	0	0	0
Initial Fut:	27	400	381	138	270	130	146	779	6	355	1353	200
User Adj:	1.00	1.00	1.00	1.00	1.00	1.00	1.00	1.00	1.00	1.00	1.00	1.00
PHF Adj:	1.00	1.00	1.00	1.00	1.00	1.00	1.00	1.00	1.00	1.00	1.00	1.00
PHF Volume:	27	400	381	138	270	130	146	779	6	355	1353	200
Reduct Vol:	0	0	0	0	0	0	0	0	0	0	0	0
Reduced Vol:	27	400	381	138	270	130	146	779	6	355	1353	200
PCE Adj:	1.00	1.00	1.00	1.00	1.00	1.00	1.00	1.00	1.00	1.00	1.00	1.00
MLF Adj:	1.00	1.00	1.00	1.00	1.00	1.00	1.00	1.00	1.00	1.00	1.00	1.00
FinalVolume:	27	400	381	138	270	130	146	779	6	355	1353	200
Saturation Flow Module:												
Sat/Lane:	1900	1900	1900	1900	1900	1900	1900	1900	1900	1900	1900	1900
Adjustment:	0.95	1.00	0.85	0.95	1.00	0.85	0.95	0.95	0.95	0.95	0.93	0.93
Lanes:	1.00	1.00	1.00	1.00	1.00	1.00	1.00	1.98	0.02	1.00	1.74	0.26
Final Sat.:	1805	1900	1615	1805	1900	1615	1805	3579	28	1805	3085	456
Capacity Analysis Module:												
Vol/Sat:	0.01	0.21	0.24	0.08	0.14	0.08	0.08	0.22	0.22	0.20	0.44	0.44
Crit Moves:		****		****			****				****	
Green/Cycle:	0.10	0.22	0.48	0.08	0.20	0.20	0.08	0.28	0.28	0.26	0.46	0.46
Volume/Cap:	0.15	0.96	0.50	0.96	0.71	0.40	0.96	0.77	0.77	0.77	0.96	0.96
Delay/Veh:	41.6	72.4	18.5	108.6	43.4	35.6	106.4	36.3	36.3	41.9	40.3	40.3
User DelAdj:	1.00	1.00	1.00	1.00	1.00	1.00	1.00	1.00	1.00	1.00	1.00	1.00
AdjDel/Veh:	41.6	72.4	18.5	108.6	43.4	35.6	106.4	36.3	36.3	41.9	40.3	40.3
LOS by Move:	D	E	B	F	D	D	F	D	D	D	D	D
HCM2kAvgQ:	1	17	8	8	9	4	8	13	13	12	30	30

Note: Queue reported is the number of cars per lane.

Traffix 7.9.0215 (c) 2008 Dowling Assoc. Licensed to MMA, LONG BEACH, CA

Overlook Parkway Extension
Existing
AM Peak Hour

Level Of Service Computation Report
2000 HCM Operations Method (Future Volume Alternative)

Intersection #13 Alessandro Blvd/Arlington Ave

Cycle (sec): 100 Critical Vol./Cap.(X): 0.758
Loss Time (sec): 16 (Y+R=4.0 sec) Average Delay (sec/veh): 30.0
Optimal Cycle: 78 Level Of Service: C

Street Name:	Alessandro Blvd						Arlington Ave					
Approach:	North Bound			South Bound			East Bound			West Bound		
Movement:	L -	T -	R	L -	T -	R	L -	T -	R	L -	T -	R
Control:	Protected			Protected			Protected			Protected		
Rights:	Ovl			Include			Ovl			Ovl		
Min. Green:	7	7	7	7	7	7	7	7	7	7	7	7
Lanes:	2 0	2 0	1	2 0	2 1	0	1 0	2 0	2	2 0	2 0	1
Volume Module:												
Base Vol:	1174	1383	307	236	388	43	42	590	624	81	529	238
Growth Adj:	1.00	1.00	1.00	1.00	1.00	1.00	1.00	1.00	1.00	1.00	1.00	1.00
Initial Bse:	1174	1383	307	236	388	43	42	590	624	81	529	238
Added Vol:	0	0	0	0	0	0	0	0	0	0	0	0
PasserByVol:	0	0	0	0	0	0	0	0	0	0	0	0
Initial Fut:	1174	1383	307	236	388	43	42	590	624	81	529	238
User Adj:	1.00	1.00	1.00	1.00	1.00	1.00	1.00	1.00	1.00	1.00	1.00	1.00
PHF Adj:	1.00	1.00	1.00	1.00	1.00	1.00	1.00	1.00	1.00	1.00	1.00	1.00
PHF Volume:	1174	1383	307	236	388	43	42	590	624	81	529	238
Reduct Vol:	0	0	0	0	0	0	0	0	0	0	0	0
Reduced Vol:	1174	1383	307	236	388	43	42	590	624	81	529	238
PCE Adj:	1.00	1.00	1.00	1.00	1.00	1.00	1.00	1.00	1.00	1.00	1.00	1.00
MLF Adj:	1.00	1.00	1.00	1.00	1.00	1.00	1.00	1.00	1.00	1.00	1.00	1.00
FinalVolume:	1174	1383	307	236	388	43	42	590	624	81	529	238
Saturation Flow Module:												
Sat/Lane:	1900	1900	1900	1900	1900	1900	1900	1900	1900	1900	1900	1900
Adjustment:	0.92	0.95	0.85	0.92	0.90	0.90	0.95	0.95	0.75	0.92	0.95	0.85
Lanes:	2.00	2.00	1.00	2.00	2.70	0.30	1.00	2.00	2.00	2.00	2.00	1.00
Final Sat.:	3502	3610	1615	3502	4599	510	1805	3610	2842	3502	3610	1615
Capacity Analysis Module:												
Vol/Sat:	0.34	0.38	0.19	0.07	0.08	0.08	0.02	0.16	0.22	0.02	0.15	0.15
Crit Moves:		****		****				****		****		
Green/Cycle:	0.45	0.48	0.55	0.08	0.11	0.11	0.09	0.20	0.66	0.07	0.19	0.27
Volume/Cap:	0.74	0.80	0.35	0.80	0.74	0.74	0.26	0.80	0.33	0.33	0.79	0.54
Delay/Veh:	24.6	24.6	12.7	59.0	48.0	48.0	43.4	43.8	7.7	45.1	45.0	32.6
User DelAdj:	1.00	1.00	1.00	1.00	1.00	1.00	1.00	1.00	1.00	1.00	1.00	1.00
AdjDel/Veh:	24.6	24.6	12.7	59.0	48.0	48.0	43.4	43.8	7.7	45.1	45.0	32.6
LOS by Move:	C	C	B	E	D	D	D	D	A	D	D	C
HCM2kAvgQ:	16	20	5	6	6	6	1	11	5	2	10	7

Note: Queue reported is the number of cars per lane.

Traffix 7.9.0215 (c) 2008 Dowling Assoc. Licensed to MMA, LONG BEACH, CA

Overlook Parkway Extension
Existing
AM Peak Hour

Level Of Service Computation Report
2000 HCM Operations Method (Future Volume Alternative)

Intersection #14 Alessandro Blvd/Overlook Pkwy

Cycle (sec):	100	Critical Vol./Cap.(X):	0.757
Loss Time (sec):	16 (Y+R=4.0 sec)	Average Delay (sec/veh):	21.5
Optimal Cycle:	78	Level Of Service:	C

Street Name:	Alessandro Blvd						Overlook Pkwy					
Approach:	North Bound			South Bound			East Bound			West Bound		
Movement:	L - T - R			L - T - R			L - T - R			L - T - R		
Control:	Protected			Protected			Protected			Protected		
Rights:	Include			Include			Include			Include		
Min. Green:	7	7	7	7	7	7	7	7	7	7	7	7
Lanes:	1 0	3 0	1	1 0	2 1	0	1 0	1 1	0	3 0	0 1	0
Volume Module:												
Base Vol:	6	2850	857	25	938	8	21	8	6	263	16	85
Growth Adj:	1.00	1.00	1.00	1.00	1.00	1.00	1.00	1.00	1.00	1.00	1.00	1.00
Initial Bse:	6	2850	857	25	938	8	21	8	6	263	16	85
Added Vol:	0	0	0	0	0	0	0	0	0	0	0	0
PasserByVol:	0	0	0	0	0	0	0	0	0	0	0	0
Initial Fut:	6	2850	857	25	938	8	21	8	6	263	16	85
User Adj:	1.00	1.00	1.00	1.00	1.00	1.00	1.00	1.00	1.00	1.00	1.00	1.00
PHF Adj:	1.00	1.00	1.00	1.00	1.00	1.00	1.00	1.00	1.00	1.00	1.00	1.00
PHF Volume:	6	2850	857	25	938	8	21	8	6	263	16	85
Reduct Vol:	0	0	0	0	0	0	0	0	0	0	0	0
Reduced Vol:	6	2850	857	25	938	8	21	8	6	263	16	85
PCE Adj:	1.00	1.00	1.00	1.00	1.00	1.00	1.00	1.00	1.00	1.00	1.00	1.00
MLF Adj:	1.00	1.00	1.00	1.00	1.00	1.00	1.00	1.00	1.00	1.00	1.00	1.00
FinalVolume:	6	2850	857	25	938	8	21	8	6	263	16	85
Saturation Flow Module:												
Sat/Lane:	1900	1900	1900	1900	1900	1900	1900	1900	1900	1900	1900	1900
Adjustment:	0.95	0.91	0.85	0.95	0.91	0.91	0.95	0.89	0.89	0.92	0.87	0.87
Lanes:	1.00	3.00	1.00	1.00	2.97	0.03	1.00	1.14	0.86	3.00	0.16	0.84
Final Sat.:	1805	5187	1615	1805	5138	44	1805	1931	1448	5253	263	1398
Capacity Analysis Module:												
Vol/Sat:	0.00	0.55	0.53	0.01	0.18	0.18	0.01	0.00	0.00	0.05	0.06	0.06
Crit Moves:		****		****			****				****	
Green/Cycle:	0.19	0.63	0.63	0.07	0.51	0.51	0.07	0.07	0.07	0.07	0.07	0.07
Volume/Cap:	0.02	0.87	0.84	0.20	0.36	0.36	0.17	0.06	0.06	0.72	0.87	0.87
Delay/Veh:	32.6	18.0	21.1	44.6	15.0	15.0	44.4	43.5	43.5	52.1	91.7	91.7
User DelAdj:	1.00	1.00	1.00	1.00	1.00	1.00	1.00	1.00	1.00	1.00	1.00	1.00
AdjDel/Veh:	32.6	18.0	21.1	44.6	15.0	15.0	44.4	43.5	43.5	52.1	91.7	91.7
LOS by Move:	C	B	C	D	B	B	D	D	D	D	F	F
HCM2kAvgQ:	0	29	23	1	6	6	1	0	0	4	6	6

Note: Queue reported is the number of cars per lane.

Traffix 7.9.0215 (c) 2008 Dowling Assoc. Licensed to MMA, LONG BEACH, CA

Overlook Parkway Extension
Existing
AM Peak Hour

Level Of Service Computation Report
2000 HCM Operations Method (Future Volume Alternative)

Intersection #15 Alessandro Blvd/Trautwein Rd

Cycle (sec):	100	Critical Vol./Cap.(X):	0.807
Loss Time (sec):	12 (Y+R=4.0 sec)	Average Delay (sec/veh):	31.3
Optimal Cycle:	79	Level Of Service:	C

Street Name:	Alessandro Blvd						Trautwein Rd					
Approach:	North Bound			South Bound			East Bound			West Bound		
Movement:	L - T - R			L - T - R			L - T - R			L - T - R		
Control:	Protected			Protected			Protected			Protected		
Rights:	Include			Ignore			Ignore			Include		
Min. Green:	7	7	7	7	7	7	7	7	7	7	7	7
Lanes:	2 0	3 0	0	0 0	3 0	1	3 0	0 0	1	0 0	0 0	0
Volume Module:												
Base Vol:	98	1837	0	0	741	541	1868	0	148	0	0	0
Growth Adj:	1.00	1.00	1.00	1.00	1.00	1.00	1.00	1.00	1.00	1.00	1.00	1.00
Initial Bse:	98	1837	0	0	741	541	1868	0	148	0	0	0
Added Vol:	0	0	0	0	0	0	0	0	0	0	0	0
PasserByVol:	0	0	0	0	0	0	0	0	0	0	0	0
Initial Fut:	98	1837	0	0	741	541	1868	0	148	0	0	0
User Adj:	1.00	1.00	1.00	1.00	1.00	0.00	1.00	1.00	0.00	1.00	1.00	1.00
PHF Adj:	1.00	1.00	1.00	1.00	1.00	0.00	1.00	1.00	0.00	1.00	1.00	1.00
PHF Volume:	98	1837	0	0	741	0	1868	0	0	0	0	0
Reduct Vol:	0	0	0	0	0	0	0	0	0	0	0	0
Reduced Vol:	98	1837	0	0	741	0	1868	0	0	0	0	0
PCE Adj:	1.00	1.00	1.00	1.00	1.00	0.00	1.00	1.00	0.00	1.00	1.00	1.00
MLF Adj:	1.00	1.00	1.00	1.00	1.00	0.00	1.00	1.00	0.00	1.00	1.00	1.00
FinalVolume:	98	1837	0	0	741	0	1868	0	0	0	0	0
Saturation Flow Module:												
Sat/Lane:	1900	1900	1900	1900	1900	1900	1900	1900	1900	1900	1900	1900
Adjustment:	0.92	0.91	1.00	1.00	0.91	1.00	0.92	1.00	1.00	1.00	1.00	1.00
Lanes:	2.00	3.00	0.00	0.00	3.00	1.00	3.00	0.00	1.00	0.00	0.00	0.00
Final Sat.:	3502	5187	0	0	5187	1900	5253	0	1900	0	0	0
Capacity Analysis Module:												
Vol/Sat:	0.03	0.35	0.00	0.00	0.14	0.00	0.36	0.00	0.00	0.00	0.00	0.00
Crit Moves:		****		****			****					
Green/Cycle:	0.16	0.40	0.00	0.00	0.32	0.00	0.41	0.00	0.00	0.00	0.00	0.00
Volume/Cap:	0.18	0.88	0.00	0.00	0.45	0.00	0.88	0.00	0.00	0.00	0.00	0.00
Delay/Veh:	36.8	32.0	0.0	0.0	27.3	0.0	31.8	0.0	0.0	0.0	0.0	0.0
User DelAdj:	1.00	1.00	1.00	1.00	1.00	1.00	1.00	1.00	1.00	1.00	1.00	1.00
AdjDel/Veh:	36.8	32.0	0.0	0.0	27.3	0.0	31.8	0.0	0.0	0.0	0.0	0.0
LOS by Move:	D	C	A	A	C	A	C	A	A	A	A	A
HCM2kAvgQ:	1	22	0	0	7	0	21	0	0	0	0	0

Note: Queue reported is the number of cars per lane.

Traffix 7.9.0215 (c) 2008 Dowling Assoc. Licensed to MMA, LONG BEACH, CA

Overlook Parkway Extension
Existing
AM Peak Hour

Level Of Service Computation Report
2000 HCM 4-Way Stop Method (Future Volume Alternative)

Intersection #16 Crystal View Ter/Overlook Pkwy

Cycle (sec):	100	Critical Vol./Cap.(X):	0.108
Loss Time (sec):	0 (Y+R=4.0 sec)	Average Delay (sec/veh):	7.4
Optimal Cycle:	0	Level Of Service:	A

Street Name:	Crystal View Ter							Overlook Pkwy					
Approach:	North Bound			South Bound			East Bound			West Bound			
Movement:	L	T	R	L	T	R	L	T	R	L	T	R	
Control:	Stop Sign			Stop Sign			Stop Sign			Stop Sign			
Rights:	Include			Include			Include			Include			
Min. Green:	7	7	7	7	7	7	7	7	7	7	7	7	
Lanes:	1 0	0	0 0	0 0	1! 0	0	1 0	0	1 0	1 0	0	1 0	
Volume Module:													
Base Vol:	90	0	0	0	0	0	0	0	73	0	0	0	
Growth Adj:	1.00	1.00	1.00	1.00	1.00	1.00	1.00	1.00	1.00	1.00	1.00	1.00	
Initial Bse:	90	0	0	0	0	0	0	0	73	0	0	0	
Added Vol:	0	0	0	0	0	0	0	0	0	0	0	0	
PasserByVol:	0	0	0	0	0	0	0	0	0	0	0	0	
Initial Fut:	90	0	0	0	0	0	0	0	73	0	0	0	
User Adj:	1.00	1.00	1.00	1.00	1.00	1.00	1.00	1.00	1.00	1.00	1.00	1.00	
PHF Adj:	1.00	1.00	1.00	1.00	1.00	1.00	1.00	1.00	1.00	1.00	1.00	1.00	
PHF Volume:	90	0	0	0	0	0	0	0	73	0	0	0	
Reduct Vol:	0	0	0	0	0	0	0	0	0	0	0	0	
Reduced Vol:	90	0	0	0	0	0	0	0	73	0	0	0	
PCE Adj:	1.00	1.00	1.00	1.00	1.00	1.00	1.00	1.00	1.00	1.00	1.00	1.00	
MLF Adj:	1.00	1.00	1.00	1.00	1.00	1.00	1.00	1.00	1.00	1.00	1.00	1.00	
FinalVolume:	90	0	0	0	0	0	0	0	73	0	0	0	
Saturation Flow Module:													
Adjustment:	1.00	1.00	1.00	1.00	1.00	1.00	1.00	1.00	1.00	1.00	1.00	1.00	
Lanes:	1.00	0.00	0.00	0.00	1.00	0.00	1.00	0.00	1.00	1.00	1.00	0.00	
Final Sat.:	835	0	0	0	852	0	682	0	883	675	744	0	
Capacity Analysis Module:													
Vol/Sat:	0.11	xxxx	xxxx	xxxx	0.00	xxxx	0.00	xxxx	0.08	0.00	0.00	xxxx	
Crit Moves:	****				****				****		****		
Delay/Veh:	7.8	0.0	0.0	0.0	0.0	0.0	0.0	0.0	7.0	0.0	0.0	0.0	
Delay Adj:	1.00	1.00	1.00	1.00	1.00	1.00	1.00	1.00	1.00	1.00	1.00	1.00	
AdjDel/Veh:	7.8	0.0	0.0	0.0	0.0	0.0	0.0	0.0	7.0	0.0	0.0	0.0	
LOS by Move:	A	*	*	*	*	*	*	*	A	*	*	*	
ApproachDel:	7.8			xxxxxx			7.0			xxxxxx			
Delay Adj:	1.00			xxxxx			1.00			xxxxx			
ApprAdjDel:	7.8			xxxxxx			7.0			xxxxxx			
LOS by Appr:	A			*			A			*			
AllWayAvgQ:	0.1	0.1	0.1	0.0	0.0	0.0	0.0	0.1	0.1	0.0	0.0	0.0	

Overlook Parkway Extension
Existing
AM Peak Hour

Note: Queue reported is the number of cars per lane.

Overlook Parkway Extension
Existing
AM Peak Hour

Level Of Service Computation Report
2000 HCM Unsignalized Method (Future Volume Alternative)

Intersection #17 Kingdom Dr/Overlook Pkwy

Average Delay (sec/veh): 2.7 Worst Case Level Of Service: A[9.6]

Street Name:	Kingdom Dr						Overlook Pkwy					
Approach:	North Bound			South Bound			East Bound			West Bound		
Movement:	L -	T -	R	L -	T -	R	L -	T -	R	L -	T -	R
Control:	Stop Sign			Stop Sign			Uncontrolled			Uncontrolled		
Rights:	Include			Include			Include			Include		
Lanes:	0 0	1! 0	0	1 0	0 0	0	1 0	0 1	0	1 0	0 1	0
Volume Module:												
Base Vol:	34	0	16	5	0	0	0	50	18	7	79	0
Growth Adj:	1.00	1.00	1.00	1.00	1.00	1.00	1.00	1.00	1.00	1.00	1.00	1.00
Initial Bse:	34	0	16	5	0	0	0	50	18	7	79	0
Added Vol:	0	0	0	0	0	0	0	0	0	0	0	0
PasserByVol:	0	0	0	0	0	0	0	0	0	0	0	0
Initial Fut:	34	0	16	5	0	0	0	50	18	7	79	0
User Adj:	1.00	1.00	1.00	1.00	1.00	1.00	1.00	1.00	1.00	1.00	1.00	1.00
PHF Adj:	1.00	1.00	1.00	1.00	1.00	1.00	1.00	1.00	1.00	1.00	1.00	1.00
PHF Volume:	34	0	16	5	0	0	0	50	18	7	79	0
Reduct Vol:	0	0	0	0	0	0	0	0	0	0	0	0
FinalVolume:	34	0	16	5	0	0	0	50	18	7	79	0
Critical Gap Module:												
Critical Gp:	7.1	6.5	6.2	7.1	xxxx	xxxxx	xxxxx	xxxx	xxxxx	4.1	xxxx	xxxxx
FollowUpTim:	3.5	4.0	3.3	3.5	xxxx	xxxxx	xxxxx	xxxx	xxxxx	2.2	xxxx	xxxxx
Capacity Module:												
Cnflict Vol:	152	152	59	160	xxxx	xxxxx	xxxx	xxxx	xxxxx	68	xxxx	xxxxx
Potent Cap.:	820	743	1012	810	xxxx	xxxxx	xxxx	xxxx	xxxxx	1546	xxxx	xxxxx
Move Cap.:	817	740	1012	795	xxxx	xxxxx	xxxx	xxxx	xxxxx	1546	xxxx	xxxxx
Volume/Cap:	0.04	0.00	0.02	0.01	xxxx	xxxx	xxxx	xxxx	xxxx	0.00	xxxx	xxxx
Level Of Service Module:												
2Way95thQ:	xxxx	xxxx	xxxxx	0.0	xxxx	xxxxx	xxxx	xxxx	xxxxx	0.0	xxxx	xxxxx
Control Del:	xxxxx	xxxx	xxxxx	9.6	xxxx	xxxxx	xxxxx	xxxx	xxxxx	7.3	xxxx	xxxxx
LOS by Move:	*	*	*	A	*	*	*	*	*	A	*	*
Movement:	LT -	LTR -	RT	LT -	LTR -	RT	LT -	LTR -	RT	LT -	LTR -	RT
Shared Cap.:	xxxx	871	xxxxx	xxxx	xxxx	xxxxx	xxxx	xxxx	xxxxx	xxxx	xxxx	xxxxx
SharedQueue:	xxxxx	0.2	xxxxx	xxxxx	xxxx	xxxxx	xxxxx	xxxx	xxxxx	xxxxx	xxxx	xxxxx
Shrd ConDel:	xxxxx	9.4	xxxxx	xxxxx	xxxx	xxxxx	xxxxx	xxxx	xxxxx	xxxxx	xxxx	xxxxx
Shared LOS:	*	A	*	*	*	*	*	*	*	*	*	*
ApproachDel:	9.4			9.6			xxxxxx			xxxxxx		
ApproachLOS:	A			A			*			*		

Note: Queue reported is the number of cars per lane.

Overlook Parkway Extension
Existing
AM Peak Hour

Level Of Service Computation Report
2000 HCM Unsignalized Method (Future Volume Alternative)

Intersection #18 Kingdom Dr/Green Orchard Pl

Average Delay (sec/veh): 3.6 Worst Case Level Of Service: A[8.5]

Street Name:	Kingdom Dr						Green Orchard Pl					
Approach:	North Bound			South Bound			East Bound			West Bound		
Movement:	L -	T -	R	L -	T -	R	L -	T -	R	L -	T -	R
Control:	Uncontrolled			Uncontrolled			Stop Sign			Stop Sign		
Rights:	Include			Include			Include			Include		
Lanes:	0 0	0 1	0	0 1	0 0	0	0 0	0 0	0	0 0	1! 0	0
Volume Module:												
Base Vol:	0	26	5	10	13	0	0	0	0	2	0	22
Growth Adj:	1.00	1.00	1.00	1.00	1.00	1.00	1.00	1.00	1.00	1.00	1.00	1.00
Initial Bse:	0	26	5	10	13	0	0	0	0	2	0	22
Added Vol:	0	0	0	0	0	0	0	0	0	0	0	0
PasserByVol:	0	0	0	0	0	0	0	0	0	0	0	0
Initial Fut:	0	26	5	10	13	0	0	0	0	2	0	22
User Adj:	1.00	1.00	1.00	1.00	1.00	1.00	1.00	1.00	1.00	1.00	1.00	1.00
PHF Adj:	1.00	1.00	1.00	1.00	1.00	1.00	1.00	1.00	1.00	1.00	1.00	1.00
PHF Volume:	0	26	5	10	13	0	0	0	0	2	0	22
Reduct Vol:	0	0	0	0	0	0	0	0	0	0	0	0
FinalVolume:	0	26	5	10	13	0	0	0	0	2	0	22
Critical Gap Module:												
Critical Gp:	xxxxx	xxxx	xxxxx	4.1	xxxx	xxxxx	xxxxx	xxxx	xxxxx	6.4	6.5	6.2
FollowUpTim:	xxxxx	xxxx	xxxxx	2.2	xxxx	xxxxx	xxxxx	xxxx	xxxxx	3.5	4.0	3.3
Capacity Module:												
Cnflict Vol:	xxxx	xxxx	xxxxx	31	xxxx	xxxxx	xxxx	xxxx	xxxxx	62	62	29
Potent Cap.:	xxxx	xxxx	xxxxx	1595	xxxx	xxxxx	xxxx	xxxx	xxxxx	950	833	1052
Move Cap.:	xxxx	xxxx	xxxxx	1595	xxxx	xxxxx	xxxx	xxxx	xxxxx	945	828	1052
Volume/Cap:	xxxx	xxxx	xxxx	0.01	xxxx	xxxx	xxxx	xxxx	xxxx	0.00	0.00	0.02
Level Of Service Module:												
2Way95thQ:	xxxx	xxxx	xxxxx	0.0	xxxx	xxxxx	xxxx	xxxx	xxxxx	xxxx	xxxx	xxxxx
Control Del:	xxxxx	xxxx	xxxxx	7.3	xxxx	xxxxx	xxxxx	xxxx	xxxxx	xxxxx	xxxx	xxxxx
LOS by Move:	*	*	*	A	*	*	*	*	*	*	*	*
Movement:	LT -	LTR -	RT	LT -	LTR -	RT	LT -	LTR -	RT	LT -	LTR -	RT
Shared Cap.:	xxxx	xxxx	xxxxx	xxxx	xxxx	xxxxx	xxxx	xxxx	xxxxx	xxxx	1042	xxxxx
SharedQueue:	xxxxx	xxxx	xxxxx	0.0	xxxx	xxxxx	xxxxx	xxxx	xxxxx	xxxxx	0.1	xxxxx
Shrd ConDel:	xxxxx	xxxx	xxxxx	7.3	xxxx	xxxxx	xxxxx	xxxx	xxxxx	xxxxx	8.5	xxxxx
Shared LOS:	*	*	*	A	*	*	*	*	*	*	A	*
ApproachDel:	xxxxxx			xxxxxx			xxxxxx			8.5		
ApproachLOS:	*			*			*			A		

Note: Queue reported is the number of cars per lane.

Overlook Parkway Extension
Existing
AM Peak Hour

Level Of Service Computation Report
2000 HCM Operations Method (Future Volume Alternative)

Intersection #19 Trautwein Rd/John F. Kennedy Dr

Cycle (sec): 100 Critical Vol./Cap.(X): 0.848
Loss Time (sec): 16 (Y+R=4.0 sec) Average Delay (sec/veh): 32.8
Optimal Cycle: 99 Level Of Service: C

Street Name:	Trautwein Rd						John F. Kennedy Dr					
Approach:	North Bound			South Bound			East Bound			West Bound		
Movement:	L - T - R			L - T - R			L - T - R			L - T - R		
Control:	Protected			Protected			Protected			Protected		
Rights:	Include			Ovl			Include			Include		
Min. Green:	7	7	7	7	7	7	7	7	7	7	7	7
Lanes:	1 0	2 0	1	1 0	2 0	1	2 0	1 0	1	1 0	0 1	0
Volume Module:												
Base Vol:	76	1761	63	7	649	456	538	59	61	96	62	56
Growth Adj:	1.00	1.00	1.00	1.00	1.00	1.00	1.00	1.00	1.00	1.00	1.00	1.00
Initial Bse:	76	1761	63	7	649	456	538	59	61	96	62	56
Added Vol:	0	0	0	0	0	0	0	0	0	0	0	0
PasserByVol:	0	0	0	0	0	0	0	0	0	0	0	0
Initial Fut:	76	1761	63	7	649	456	538	59	61	96	62	56
User Adj:	1.00	1.00	1.00	1.00	1.00	1.00	1.00	1.00	1.00	1.00	1.00	1.00
PHF Adj:	1.00	1.00	1.00	1.00	1.00	1.00	1.00	1.00	1.00	1.00	1.00	1.00
PHF Volume:	76	1761	63	7	649	456	538	59	61	96	62	56
Reduct Vol:	0	0	0	0	0	0	0	0	0	0	0	0
Reduced Vol:	76	1761	63	7	649	456	538	59	61	96	62	56
PCE Adj:	1.00	1.00	1.00	1.00	1.00	1.00	1.00	1.00	1.00	1.00	1.00	1.00
MLF Adj:	1.00	1.00	1.00	1.00	1.00	1.00	1.00	1.00	1.00	1.00	1.00	1.00
FinalVolume:	76	1761	63	7	649	456	538	59	61	96	62	56
Saturation Flow Module:												
Sat/Lane:	1900	1900	1900	1900	1900	1900	1900	1900	1900	1900	1900	1900
Adjustment:	0.95	0.95	0.85	0.95	0.95	0.85	0.92	1.00	0.85	0.95	0.93	0.93
Lanes:	1.00	2.00	1.00	1.00	2.00	1.00	2.00	1.00	1.00	1.00	0.53	0.47
Final Sat.:	1805	3610	1615	1805	3610	1615	3502	1900	1615	1805	927	838
Capacity Analysis Module:												
Vol/Sat:	0.04	0.49	0.04	0.00	0.18	0.28	0.15	0.03	0.04	0.05	0.07	0.07
Crit Moves:		****		****			****				****	
Green/Cycle:	0.17	0.53	0.53	0.07	0.43	0.60	0.17	0.12	0.12	0.12	0.07	0.07
Volume/Cap:	0.25	0.92	0.07	0.06	0.42	0.47	0.92	0.26	0.32	0.44	0.92	0.92
Delay/Veh:	36.5	29.3	11.5	43.6	19.8	11.6	60.9	40.6	41.2	42.4	101	101.5
User DelAdj:	1.00	1.00	1.00	1.00	1.00	1.00	1.00	1.00	1.00	1.00	1.00	1.00
AdjDel/Veh:	36.5	29.3	11.5	43.6	19.8	11.6	60.9	40.6	41.2	42.4	101	101.5
LOS by Move:	D	C	B	D	B	B	E	D	D	D	F	F
HCM2kAvgQ:	2	30	1	0	7	8	12	2	2	3	7	7

Note: Queue reported is the number of cars per lane.

Traffix 7.9.0215 (c) 2008 Dowling Assoc. Licensed to MMA, LONG BEACH, CA

Overlook Parkway Extension
Existing
AM Peak Hour

Level Of Service Computation Report
2000 HCM Operations Method (Future Volume Alternative)

Intersection #20 Washington St/Bradley St

Cycle (sec): 100 Critical Vol./Cap.(X): 0.626
Loss Time (sec): 12 (Y+R=4.0 sec) Average Delay (sec/veh): 20.8
Optimal Cycle: 51 Level Of Service: C

Street Name:	Washington St						Bradley St					
Approach:	North Bound			South Bound			East Bound			West Bound		
Movement:	L - T - R			L - T - R			L - T - R			L - T - R		
Control:	Protected			Protected			Permitted			Permitted		
Rights:	Include			Include			Include			Include		
Min. Green:	7	7	7	7	7	7	7	7	7	7	7	7
Lanes:	1 0	1 0	1	1 0	0 1	0	0 0	1! 0	0	0 0	1! 0	0
Volume Module:												
Base Vol:	238	830	13	30	261	8	5	12	70	19	49	95
Growth Adj:	1.00	1.00	1.00	1.00	1.00	1.00	1.00	1.00	1.00	1.00	1.00	1.00
Initial Bse:	238	830	13	30	261	8	5	12	70	19	49	95
Added Vol:	0	0	0	0	0	0	0	0	0	0	0	0
PasserByVol:	0	0	0	0	0	0	0	0	0	0	0	0
Initial Fut:	238	830	13	30	261	8	5	12	70	19	49	95
User Adj:	1.00	1.00	1.00	1.00	1.00	1.00	1.00	1.00	1.00	1.00	1.00	1.00
PHF Adj:	1.00	1.00	1.00	1.00	1.00	1.00	1.00	1.00	1.00	1.00	1.00	1.00
PHF Volume:	238	830	13	30	261	8	5	12	70	19	49	95
Reduct Vol:	0	0	0	0	0	0	0	0	0	0	0	0
Reduced Vol:	238	830	13	30	261	8	5	12	70	19	49	95
PCE Adj:	1.00	1.00	1.00	1.00	1.00	1.00	1.00	1.00	1.00	1.00	1.00	1.00
MLF Adj:	1.00	1.00	1.00	1.00	1.00	1.00	1.00	1.00	1.00	1.00	1.00	1.00
FinalVolume:	238	830	13	30	261	8	5	12	70	19	49	95
Saturation Flow Module:												
Sat/Lane:	1900	1900	1900	1900	1900	1900	1900	1900	1900	1900	1900	1900
Adjustment:	0.95	1.00	0.85	0.95	1.00	1.00	0.88	0.88	0.88	0.88	0.88	0.88
Lanes:	1.00	1.00	1.00	1.00	0.97	0.03	0.06	0.14	0.80	0.12	0.30	0.58
Final Sat.:	1805	1900	1615	1805	1836	56	96	230	1344	196	504	978
Capacity Analysis Module:												
Vol/Sat:	0.13	0.44	0.01	0.02	0.14	0.14	0.05	0.05	0.05	0.10	0.10	0.10
Crit Moves:		****		****							****	
Green/Cycle:	0.35	0.66	0.66	0.07	0.38	0.38	0.15	0.15	0.15	0.15	0.15	0.15
Volume/Cap:	0.37	0.66	0.01	0.24	0.37	0.37	0.35	0.35	0.35	0.66	0.66	0.66
Delay/Veh:	24.5	11.4	5.7	44.9	22.7	22.7	39.2	39.2	39.2	46.7	46.7	46.7
User DelAdj:	1.00	1.00	1.00	1.00	1.00	1.00	1.00	1.00	1.00	1.00	1.00	1.00
AdjDel/Veh:	24.5	11.4	5.7	44.9	22.7	22.7	39.2	39.2	39.2	46.7	46.7	46.7
LOS by Move:	C	B	A	D	C	C	D	D	D	D	D	D
HCM2kAvgQ:	6	16	0	1	6	6	3	3	3	6	6	6

Note: Queue reported is the number of cars per lane.

Traffix 7.9.0215 (c) 2008 Dowling Assoc. Licensed to MMA, LONG BEACH, CA

Overlook Parkway Extension
Existing
AM Peak Hour

Level Of Service Computation Report
2000 HCM Operations Method (Future Volume Alternative)

Intersection #21 Alessandro Blvd/Via Vista Dr

Cycle (sec): 100 Critical Vol./Cap.(X): 0.824
Loss Time (sec): 16 (Y+R=4.0 sec) Average Delay (sec/veh): 24.0
Optimal Cycle: 92 Level Of Service: C

Street Name:	Alessandro Blvd						Via Vista Dr					
Approach:	North Bound			South Bound			East Bound			West Bound		
Movement:	L	T	R	L	T	R	L	T	R	L	T	R
Control:	Protected			Protected			Protected			Protected		
Rights:	Include			Include			Include			Include		
Min. Green:	7	7	7	7	7	7	7	7	7	7	7	7
Lanes:	1 0	2 1	0	1 0	2 1	0	1 0	1 0	1	1 0	1 0	1
Volume Module:												
Base Vol:	60	2754	10	25	1042	53	153	50	52	18	38	97
Growth Adj:	1.00	1.00	1.00	1.00	1.00	1.00	1.00	1.00	1.00	1.00	1.00	1.00
Initial Bse:	60	2754	10	25	1042	53	153	50	52	18	38	97
Added Vol:	0	0	0	0	0	0	0	0	0	0	0	0
PasserByVol:	0	0	0	0	0	0	0	0	0	0	0	0
Initial Fut:	60	2754	10	25	1042	53	153	50	52	18	38	97
User Adj:	1.00	1.00	1.00	1.00	1.00	1.00	1.00	1.00	1.00	1.00	1.00	1.00
PHF Adj:	1.00	1.00	1.00	1.00	1.00	1.00	1.00	1.00	1.00	1.00	1.00	1.00
PHF Volume:	60	2754	10	25	1042	53	153	50	52	18	38	97
Reduct Vol:	0	0	0	0	0	0	0	0	0	0	0	0
Reduced Vol:	60	2754	10	25	1042	53	153	50	52	18	38	97
PCE Adj:	1.00	1.00	1.00	1.00	1.00	1.00	1.00	1.00	1.00	1.00	1.00	1.00
MLF Adj:	1.00	1.00	1.00	1.00	1.00	1.00	1.00	1.00	1.00	1.00	1.00	1.00
FinalVolume:	60	2754	10	25	1042	53	153	50	52	18	38	97
Saturation Flow Module:												
Sat/Lane:	1900	1900	1900	1900	1900	1900	1900	1900	1900	1900	1900	1900
Adjustment:	0.95	0.91	0.91	0.95	0.90	0.90	0.95	1.00	0.85	0.95	1.00	0.85
Lanes:	1.00	2.99	0.01	1.00	2.85	0.15	1.00	1.00	1.00	1.00	1.00	1.00
Final Sat.:	1805	5163	19	1805	4901	249	1805	1900	1615	1805	1900	1615
Capacity Analysis Module:												
Vol/Sat:	0.03	0.53	0.53	0.01	0.21	0.21	0.08	0.03	0.03	0.01	0.02	0.06
Crit Moves:		****			****		****					****
Green/Cycle:	0.17	0.60	0.60	0.07	0.51	0.51	0.10	0.08	0.08	0.08	0.07	0.07
Volume/Cap:	0.20	0.88	0.88	0.20	0.42	0.42	0.88	0.32	0.39	0.12	0.29	0.86
Delay/Veh:	36.2	20.1	20.1	44.6	15.5	15.5	82.0	44.3	45.3	42.8	45.3	90.0
User DelAdj:	1.00	1.00	1.00	1.00	1.00	1.00	1.00	1.00	1.00	1.00	1.00	1.00
AdjDel/Veh:	36.2	20.1	20.1	44.6	15.5	15.5	82.0	44.3	45.3	42.8	45.3	90.0
LOS by Move:	D	C	C	D	B	B	F	D	D	D	D	F
HCM2kAvgQ:	2	30	30	1	8	8	7	2	2	1	1	5

Note: Queue reported is the number of cars per lane.

Traffix 7.9.0215 (c) 2008 Dowling Assoc. Licensed to MMA, LONG BEACH, CA

Overlook Parkway Extension
Existing
AM Peak Hour

Level Of Service Computation Report
2000 HCM 4-Way Stop Method (Future Volume Alternative)

Intersection #23 Mary St/Hawarden Dr

Cycle (sec): 100 Critical Vol./Cap.(X): 0.179
Loss Time (sec): 0 (Y+R=4.0 sec) Average Delay (sec/veh): 8.0
Optimal Cycle: 0 Level Of Service: A

Street Name:	Mary St						Hawarden Dr					
Approach:	North Bound			South Bound			East Bound			West Bound		
Movement:	L	T	R	L	T	R	L	T	R	L	T	R
Control:	Stop Sign			Stop Sign			Stop Sign			Stop Sign		
Rights:	Include			Include			Include			Include		
Min. Green:	7	7	7	7	7	7	7	7	7	7	7	7
Lanes:	0 1	0 0	0	0 0	0 1	0	0 0	1! 0	0	0 0	0 0	0
Volume Module:												
Base Vol:	2	147	0	0	53	30	106	0	1	0	0	0
Growth Adj:	1.00	1.00	1.00	1.00	1.00	1.00	1.00	1.00	1.00	1.00	1.00	1.00
Initial Bse:	2	147	0	0	53	30	106	0	1	0	0	0
Added Vol:	0	0	0	0	0	0	0	0	0	0	0	0
PasserByVol:	0	0	0	0	0	0	0	0	0	0	0	0
Initial Fut:	2	147	0	0	53	30	106	0	1	0	0	0
User Adj:	1.00	1.00	1.00	1.00	1.00	1.00	1.00	1.00	1.00	1.00	1.00	1.00
PHF Adj:	1.00	1.00	1.00	1.00	1.00	1.00	1.00	1.00	1.00	1.00	1.00	1.00
PHF Volume:	2	147	0	0	53	30	106	0	1	0	0	0
Reduct Vol:	0	0	0	0	0	0	0	0	0	0	0	0
Reduced Vol:	2	147	0	0	53	30	106	0	1	0	0	0
PCE Adj:	1.00	1.00	1.00	1.00	1.00	1.00	1.00	1.00	1.00	1.00	1.00	1.00
MLF Adj:	1.00	1.00	1.00	1.00	1.00	1.00	1.00	1.00	1.00	1.00	1.00	1.00
FinalVolume:	2	147	0	0	53	30	106	0	1	0	0	0
Saturation Flow Module:												
Adjustment:	1.00	1.00	1.00	1.00	1.00	1.00	1.00	1.00	1.00	1.00	1.00	1.00
Lanes:	0.01	0.99	0.00	0.00	0.64	0.36	0.99	0.00	0.01	0.00	0.00	0.00
Final Sat.:	11	820	0	0	547	310	751	0	7	0	0	0
Capacity Analysis Module:												
Vol/Sat:	0.18	0.18	xxxx	xxxx	0.10	0.10	0.14	xxxx	0.14	xxxx	xxxx	xxxx
Crit Moves:		****				****	****					
Delay/Veh:	8.1	8.1	0.0	0.0	7.5	7.5	8.3	0.0	8.3	0.0	0.0	0.0
Delay Adj:	1.00	1.00	1.00	1.00	1.00	1.00	1.00	1.00	1.00	1.00	1.00	1.00
AdjDel/Veh:	8.1	8.1	0.0	0.0	7.5	7.5	8.3	0.0	8.3	0.0	0.0	0.0
LOS by Move:	A	A	*	*	A	A	A	*	A	*	*	*
ApproachDel:	8.1			7.5			8.3			xxxxxx		
Delay Adj:	1.00			1.00			1.00			xxxxx		
ApprAdjDel:	8.1			7.5			8.3			xxxxxx		
LOS by Appr:	A			A			A			*		
AllWayAvgQ:	0.2	0.2	0.2	0.1	0.1	0.1	0.2	0.2	0.2	0.0	0.0	0.0

Traffix 7.9.0215 (c) 2008 Dowling Assoc. Licensed to MMA, LONG BEACH, CA

Overlook Parkway Extension
Existing
AM Peak Hour

Note: Queue reported is the number of cars per lane.

Overlook Parkway Extension
Existing
AM Peak Hour

Level Of Service Computation Report
2000 HCM 4-Way Stop Method (Future Volume Alternative)

Intersection #24 Hawarden Dr/Overlook Pkwy

Cycle (sec):	100	Critical Vol./Cap.(X):	0.162
Loss Time (sec):	0 (Y+R=4.0 sec)	Average Delay (sec/veh):	8.1
Optimal Cycle:	0	Level Of Service:	A

Street Name:	Hawarden Dr						Overlook Pkwy					
Approach:	North Bound			South Bound			East Bound			West Bound		
Movement:	L	T	R	L	T	R	L	T	R	L	T	R
Control:	Stop Sign			Stop Sign			Stop Sign			Stop Sign		
Rights:	Include			Include			Include			Include		
Min. Green:	7	7	7	7	7	7	7	7	7	7	7	7
Lanes:	0 0	1! 0	0	0 0	1! 0	0	1 0	1 1	0	1 0	1 1	0
Volume Module:												
Base Vol:	51	68	5	8	15	9	6	48	24	1	133	15
Growth Adj:	1.00	1.00	1.00	1.00	1.00	1.00	1.00	1.00	1.00	1.00	1.00	1.00
Initial Bse:	51	68	5	8	15	9	6	48	24	1	133	15
Added Vol:	0	0	0	0	0	0	0	0	0	0	0	0
PasserByVol:	0	0	0	0	0	0	0	0	0	0	0	0
Initial Fut:	51	68	5	8	15	9	6	48	24	1	133	15
User Adj:	1.00	1.00	1.00	1.00	1.00	1.00	1.00	1.00	1.00	1.00	1.00	1.00
PHF Adj:	1.00	1.00	1.00	1.00	1.00	1.00	1.00	1.00	1.00	1.00	1.00	1.00
PHF Volume:	51	68	5	8	15	9	6	48	24	1	133	15
Reduct Vol:	0	0	0	0	0	0	0	0	0	0	0	0
Reduced Vol:	51	68	5	8	15	9	6	48	24	1	133	15
PCE Adj:	1.00	1.00	1.00	1.00	1.00	1.00	1.00	1.00	1.00	1.00	1.00	1.00
MLF Adj:	1.00	1.00	1.00	1.00	1.00	1.00	1.00	1.00	1.00	1.00	1.00	1.00
FinalVolume:	51	68	5	8	15	9	6	48	24	1	133	15
Saturation Flow Module:												
Adjustment:	1.00	1.00	1.00	1.00	1.00	1.00	1.00	1.00	1.00	1.00	1.00	1.00
Lanes:	0.41	0.55	0.04	0.25	0.47	0.28	1.00	1.33	0.67	1.00	1.80	0.20
Final Sat.:	316	421	31	193	362	217	639	958	514	648	1297	149
Capacity Analysis Module:												
Vol/Sat:	0.16	0.16	0.16	0.04	0.04	0.04	0.01	0.05	0.05	0.00	0.10	0.10
Crit Moves:		****			****			****			****	
Delay/Veh:	8.4	8.4	8.4	7.6	7.6	7.6	8.2	7.8	7.4	8.1	8.1	8.0
Delay Adj:	1.00	1.00	1.00	1.00	1.00	1.00	1.00	1.00	1.00	1.00	1.00	1.00
AdjDel/Veh:	8.4	8.4	8.4	7.6	7.6	7.6	8.2	7.8	7.4	8.1	8.1	8.0
LOS by Move:	A	A	A	A	A	A	A	A	A	A	A	A
ApproachDel:	8.4			7.6			7.7			8.1		
Delay Adj:	1.00			1.00			1.00			1.00		
ApprAdjDel:	8.4			7.6			7.7			8.1		
LOS by Appr:	A			A			A			A		
AllWayAvgQ:	0.2	0.2	0.2	0.0	0.0	0.0	0.0	0.1	0.0	0.0	0.1	0.1

Overlook Parkway Extension
Existing
AM Peak Hour

Note: Queue reported is the number of cars per lane.

Overlook Parkway Extension
Existing
AM Peak Hour

Level Of Service Computation Report
2000 HCM 4-Way Stop Method (Future Volume Alternative)

Intersection #25 Crystal View Ter/Berry Rd

Cycle (sec):	100	Critical Vol./Cap.(X):	0.164
Loss Time (sec):	0 (Y+R=4.0 sec)	Average Delay (sec/veh):	7.5
Optimal Cycle:	0	Level Of Service:	A

Street Name:	Crystal View Ter									Berry Rd								
Approach:	North Bound				South Bound				East Bound				West Bound					
Movement:	L	-	T	-	R	L	-	T	-	R	L	-	T	-	R	L	-	T	-	R
Control:	Stop Sign					Stop Sign					Stop Sign					Stop Sign				
Rights:	Include					Include					Include					Include				
Min. Green:	7	7	7			7	7	7			7	7	7			7	7	7		
Lanes:	0	0	1!	0	0	0	1	0	0	0	0	0	0	1	0	0	0	1!	0	0
Volume Module:																				
Base Vol:	1	54	100			53	25			0	0		1		2	30		1		37
Growth Adj:	1.00	1.00	1.00			1.00	1.00			1.00	1.00		1.00		1.00	1.00		1.00		1.00
Initial Bse:	1	54	100			53	25			0	0		1		2	30		1		37
Added Vol:	0	0	0			0	0			0	0		0		0	0		0		0
PasserByVol:	0	0	0			0	0			0	0		0		0	0		0		0
Initial Fut:	1	54	100			53	25			0	0		1		2	30		1		37
User Adj:	1.00	1.00	1.00			1.00	1.00			1.00	1.00		1.00		1.00	1.00		1.00		1.00
PHF Adj:	1.00	1.00	1.00			1.00	1.00			1.00	1.00		1.00		1.00	1.00		1.00		1.00
PHF Volume:	1	54	100			53	25			0	0		1		2	30		1		37
Reduct Vol:	0	0	0			0	0			0	0		0		0	0		0		0
Reduced Vol:	1	54	100			53	25			0	0		1		2	30		1		37
PCE Adj:	1.00	1.00	1.00			1.00	1.00			1.00	1.00		1.00		1.00	1.00		1.00		1.00
MLF Adj:	1.00	1.00	1.00			1.00	1.00			1.00	1.00		1.00		1.00	1.00		1.00		1.00
FinalVolume:	1	54	100			53	25			0	0		1		2	30		1		37
Saturation Flow Module:																				
Adjustment:	1.00	1.00	1.00			1.00	1.00			1.00	1.00		1.00		1.00	1.00		1.00		1.00
Lanes:	0.01	0.35	0.64			0.68	0.32			0.00	0.00		0.33		0.67	0.44		0.01		0.55
Final Sat.:	6	329	610			556	262			0	0		281		562	367		12		453
Capacity Analysis Module:																				
Vol/Sat:	0.16	0.16	0.16			0.10	0.10			xxxx	xxxx		0.00		0.00	0.08		0.08		0.08
Crit Moves:		****					****								****	****				
Delay/Veh:	7.5	7.5	7.5			7.8	7.8			0.0	0.0		7.0		7.0	7.5		7.5		7.5
Delay Adj:	1.00	1.00	1.00			1.00	1.00			1.00	1.00		1.00		1.00	1.00		1.00		1.00
AdjDel/Veh:	7.5	7.5	7.5			7.8	7.8			0.0	0.0		7.0		7.0	7.5		7.5		7.5
LOS by Move:	A	A	A			A	A			*	*		A		A	A		A		A
ApproachDel:	7.5					7.8					7.0					7.5				
Delay Adj:	1.00					1.00					1.00					1.00				
ApprAdjDel:	7.5					7.8					7.0					7.5				
LOS by Appr:	A					A					A					A				
AllWayAvgQ:	0.2	0.2	0.2			0.1	0.1			0.1	0.0		0.0		0.0	0.1		0.1		0.1

Overlook Parkway Extension
Existing
AM Peak Hour

Note: Queue reported is the number of cars per lane.

Overlook Parkway Extension
Existing
AM Peak Hour

Level Of Service Computation Report
2000 HCM 4-Way Stop Method (Future Volume Alternative)

Intersection #26 Corinthian Wy/Berry Rd

Cycle (sec):	100	Critical Vol./Cap.(X):	0.183
Loss Time (sec):	0 (Y+R=4.0 sec)	Average Delay (sec/veh):	7.7
Optimal Cycle:	0	Level Of Service:	A

Street Name:	Corinthian Wy									Berry Rd					
Approach:	North Bound			South Bound			East Bound			West Bound					
Movement:	L	-	T	-	R	L	-	T	-	R	L	-	T	-	R	L	-	T	-	R
Control:	Stop Sign					Stop Sign					Stop Sign					Stop Sign				
Rights:	Include					Include					Include					Include				
Min. Green:	7	7	7			7	7	7			7	7	7			7	7	7		
Lanes:	0	0	0	0	0	0	0	1!	0	0	0	1	0	0	0	0	0	0	1	0
Volume Module:																				
Base Vol:	0		0		0	6		0		28	122		34		0	0		36		29
Growth Adj:	1.00	1.00	1.00			1.00	1.00	1.00			1.00	1.00	1.00			1.00	1.00	1.00		
Initial Bse:	0		0		0	6		0		28	122		34		0	0		36		29
Added Vol:	0		0		0	0		0		0	0		0		0	0		0		0
PasserByVol:	0		0		0	0		0		0	0		0		0	0		0		0
Initial Fut:	0		0		0	6		0		28	122		34		0	0		36		29
User Adj:	1.00	1.00	1.00			1.00	1.00	1.00			1.00	1.00	1.00			1.00	1.00	1.00		
PHF Adj:	1.00	1.00	1.00			1.00	1.00	1.00			1.00	1.00	1.00			1.00	1.00	1.00		
PHF Volume:	0		0		0	6		0		28	122		34		0	0		36		29
Reduct Vol:	0		0		0	0		0		0	0		0		0	0		0		0
Reduced Vol:	0		0		0	6		0		28	122		34		0	0		36		29
PCE Adj:	1.00	1.00	1.00			1.00	1.00	1.00			1.00	1.00	1.00			1.00	1.00	1.00		
MLF Adj:	1.00	1.00	1.00			1.00	1.00	1.00			1.00	1.00	1.00			1.00	1.00	1.00		
FinalVolume:	0		0		0	6		0		28	122		34		0	0		36		29
Saturation Flow Module:																				
Adjustment:	1.00	1.00	1.00			1.00	1.00	1.00			1.00	1.00	1.00			1.00	1.00	1.00		
Lanes:	0.00	0.00	0.00			0.18	0.00	0.82			0.78	0.22	0.00			0.00	0.55	0.45		
Final Sat.:	0		0		0	156		0		727	668		186		0	0		511		412
Capacity Analysis Module:																				
Vol/Sat:	xxxx	xxxx	xxxx			0.04	xxxx	0.04			0.18	0.18	xxxx			xxxx	0.07	0.07		
Crit Moves:						****					****						****			
Delay/Veh:	0.0	0.0	0.0			7.0	0.0	7.0			8.1	8.1	0.0			0.0	7.1	7.1		
Delay Adj:	1.00	1.00	1.00			1.00	1.00	1.00			1.00	1.00	1.00			1.00	1.00	1.00		
AdjDel/Veh:	0.0	0.0	0.0			7.0	0.0	7.0			8.1	8.1	0.0			0.0	7.1	7.1		
LOS by Move:	*	*	*			A	*	A			A	A	*			*	A	A		
ApproachDel:	xxxxxx					7.0					8.1						7.1			
Delay Adj:	xxxxx					1.00					1.00						1.00			
ApprAdjDel:	xxxxxx					7.0					8.1						7.1			
LOS by Appr:	*					A					A						A			
AllWayAvgQ:	0.0	0.0	0.0			0.0	0.0	0.0			0.2	0.2	0.2			0.1	0.1	0.1		

Overlook Parkway Extension
Existing
AM Peak Hour

Note: Queue reported is the number of cars per lane.

HCM Unsignalized Intersection Capacity Analysis
27: Madison St & Dufferin Ave

6/21/2011

Movement	EBL	EBR	SBL	SBR	NEL2	NEL	NET	SWT	SWR	SWR2
Lane Configurations										
Sign Control	Stop		Stop				Stop	Stop		
Volume (vph)	25	5	0	0	9	1	10	29	28	1
Peak Hour Factor	1.00	1.00	1.00	1.00	1.00	1.00	1.00	1.00	1.00	1.00
Hourly flow rate (vph)	25	5	0	0	9	1	10	29	28	1

Direction, Lane #	EB 1	SB 1	NE 1	SW 1
Volume Total (vph)	30	0	20	58
Volume Left (vph)	0	0	9	29
Volume Right (vph)	5	0	10	1
Hadj (s)	-0.08	0.00	-0.19	0.11
Departure Headway (s)	3.9	4.1	3.9	4.1
Degree Utilization, x	0.03	0.00	0.02	0.07
Capacity (veh/h)	906	868	893	873
Control Delay (s)	7.0	7.1	7.0	7.4
Approach Delay (s)	7.0	0.0	7.0	7.4
Approach LOS	A	A	A	A

Intersection Summary				
Delay		7.2		
HCM Level of Service		A		
Intersection Capacity Utilization		17.7%	ICU Level of Service	A
Analysis Period (min)		15		

Overlook Parkway Extension
Existing
AM Peak Hour

Level Of Service Computation Report
2000 HCM Unsignalized Method (Future Volume Alternative)

Intersection #28 Orozco Dr/Overlook Pkwy

Average Delay (sec/veh): 1.8 Worst Case Level Of Service: A[9.8]

Street Name:	Orozco Dr						Overlook Pkwy					
Approach:	North Bound			South Bound			East Bound			West Bound		
Movement:	L - T - R			L - T - R			L - T - R			L - T - R		
Control:	Stop Sign			Stop Sign			Uncontrolled			Uncontrolled		
Rights:	Include			Include			Include			Include		
Lanes:	0 0 1! 0 0			0 0 1! 0 0			1 0 1 1 0			1 0 1 1 0		
Volume Module:												
Base Vol:	4	6	2	24	3	1	6	52	1	1	98	51
Growth Adj:	1.00	1.00	1.00	1.00	1.00	1.00	1.00	1.00	1.00	1.00	1.00	1.00
Initial Bse:	4	6	2	24	3	1	6	52	1	1	98	51
Added Vol:	0	0	0	0	0	0	0	0	0	0	0	0
PasserByVol:	0	0	0	0	0	0	0	0	0	0	0	0
Initial Fut:	4	6	2	24	3	1	6	52	1	1	98	51
User Adj:	1.00	1.00	1.00	1.00	1.00	1.00	1.00	1.00	1.00	1.00	1.00	1.00
PHF Adj:	1.00	1.00	1.00	1.00	1.00	1.00	1.00	1.00	1.00	1.00	1.00	1.00
PHF Volume:	4	6	2	24	3	1	6	52	1	1	98	51
Reduct Vol:	0	0	0	0	0	0	0	0	0	0	0	0
FinalVolume:	4	6	2	24	3	1	6	52	1	1	98	51
Critical Gap Module:												
Critical Gp:	7.5	6.5	6.9	7.5	6.5	6.9	4.1	xxxx	xxxxx	4.1	xxxx	xxxxx
FollowUpTim:	3.5	4.0	3.3	3.5	4.0	3.3	2.2	xxxx	xxxxx	2.2	xxxx	xxxxx
Capacity Module:												
Cnflict Vol:	117	216	27	167	191	75	149	xxxx	xxxxx	53	xxxx	xxxxx
Potent Cap.:	853	686	1050	788	708	978	1445	xxxx	xxxxx	1566	xxxx	xxxxx
Move Cap.:	846	683	1050	778	705	978	1445	xxxx	xxxxx	1566	xxxx	xxxxx
Volume/Cap:	0.00	0.01	0.00	0.03	0.00	0.00	0.00	xxxx	xxxx	0.00	xxxx	xxxx
Level Of Service Module:												
2Way95thQ:	xxxx	xxxx	xxxxx	xxxx	xxxx	xxxxx	0.0	xxxx	xxxxx	0.0	xxxx	xxxxx
Control Del:	xxxxx	xxxx	xxxxx	xxxxx	xxxx	xxxxx	7.5	xxxx	xxxxx	7.3	xxxx	xxxxx
LOS by Move:	*	*	*	*	*	*	A	*	*	A	*	*
Movement:	LT -	LTR -	RT	LT -	LTR -	RT	LT -	LTR -	RT	LT -	LTR -	RT
Shared Cap.:	xxxx	778	xxxxx	xxxx	775	xxxxx	xxxx	xxxx	xxxxx	xxxx	xxxx	xxxxx
SharedQueue:	xxxxx	0.0	xxxxx	xxxxx	0.1	xxxxx	xxxxx	xxxx	xxxxx	xxxxx	xxxx	xxxxx
Shrd ConDel:	xxxxx	9.7	xxxxx	xxxxx	9.8	xxxxx	xxxxx	xxxx	xxxxx	xxxxx	xxxx	xxxxx
Shared LOS:	*	A	*	*	A	*	*	*	*	*	*	*
ApproachDel:	9.7			9.8			xxxxxx			xxxxxx		
ApproachLOS:	A			A			*			*		

Note: Queue reported is the number of cars per lane.

Overlook Parkway Extension
Existing
AM Peak Hour

Level Of Service Computation Report
2000 HCM 4-Way Stop Method (Future Volume Alternative)

Intersection #51 Madison St/Victoria Ave (North)

Cycle (sec): 100 Critical Vol./Cap.(X): 0.405
Loss Time (sec): 0 (Y+R=4.0 sec) Average Delay (sec/veh): 9.7
Optimal Cycle: 0 Level Of Service: A

Street Name:	Madison St						Victoria Ave (North)					
Approach:	North Bound			South Bound			East Bound			West Bound		
Movement:	L - T - R			L - T - R			L - T - R			L - T - R		
Control:	Stop Sign			Stop Sign			Stop Sign			Stop Sign		
Rights:	Include			Include			Include			Include		
Min. Green:	7	7	7	7	7	7	7	7	7	7	7	7
Lanes:	0 1 0 0 0			0 0 1 0 1			0 0 0 0 0			0 1 0 0 1		
Volume Module:												
Base Vol:	9	90	0	0	83	22	0	0	0	3	281	131
Growth Adj:	1.00	1.00	1.00	1.00	1.00	1.00	1.00	1.00	1.00	1.00	1.00	1.00
Initial Bse:	9	90	0	0	83	22	0	0	0	3	281	131
Added Vol:	0	0	0	0	0	0	0	0	0	0	0	0
PasserByVol:	0	0	0	0	0	0	0	0	0	0	0	0
Initial Fut:	9	90	0	0	83	22	0	0	0	3	281	131
User Adj:	1.00	1.00	1.00	1.00	1.00	1.00	1.00	1.00	1.00	1.00	1.00	1.00
PHF Adj:	1.00	1.00	1.00	1.00	1.00	1.00	1.00	1.00	1.00	1.00	1.00	1.00
PHF Volume:	9	90	0	0	83	22	0	0	0	3	281	131
Reduct Vol:	0	0	0	0	0	0	0	0	0	0	0	0
Reduced Vol:	9	90	0	0	83	22	0	0	0	3	281	131
PCE Adj:	1.00	1.00	1.00	1.00	1.00	1.00	1.00	1.00	1.00	1.00	1.00	1.00
MLF Adj:	1.00	1.00	1.00	1.00	1.00	1.00	1.00	1.00	1.00	1.00	1.00	1.00
FinalVolume:	9	90	0	0	83	22	0	0	0	3	281	131
Saturation Flow Module:												
Adjustment:	1.00	1.00	1.00	1.00	1.00	1.00	1.00	1.00	1.00	1.00	1.00	1.00
Lanes:	0.09	0.91	0.00	0.00	1.00	1.00	0.00	0.00	0.00	0.01	0.99	1.00
Final Sat.:	56	561	0	0	613	696	0	0	0	7	693	811
Capacity Analysis Module:												
Vol/Sat:	0.16	0.16	xxxx	xxxx	0.14	0.03	xxxx	xxxx	xxxx	0.41	0.41	0.16
Crit Moves:		****			****						****	
Delay/Veh:	9.6	9.6	0.0	0.0	9.1	7.7	0.0	0.0	0.0	11.0	11.0	7.8
Delay Adj:	1.00	1.00	1.00	1.00	1.00	1.00	1.00	1.00	1.00	1.00	1.00	1.00
AdjDel/Veh:	9.6	9.6	0.0	0.0	9.1	7.7	0.0	0.0	0.0	11.0	11.0	7.8
LOS by Move:	A	A	*	*	A	A	*	*	*	B	B	A
ApproachDel:	9.6			8.8			xxxxxx			10.0		
Delay Adj:	1.00			1.00			xxxxx			1.00		
ApprAdjDel:	9.6			8.8			xxxxxx			10.0		
LOS by Appr:	A			A			*			B		
AllWayAvgQ:	0.2	0.2	0.2	0.0	0.1	0.0	0.0	0.0	0.0	0.6	0.6	0.2

Overlook Parkway Extension
Existing
AM Peak Hour

Note: Queue reported is the number of cars per lane.

Overlook Parkway Extension
Existing
AM Peak Hour

Level Of Service Computation Report
2000 HCM 4-Way Stop Method (Future Volume Alternative)

Intersection #52 Madison St/Victoria Ave (South)

Cycle (sec):	100	Critical Vol./Cap.(X):	0.401
Loss Time (sec):	0 (Y+R=4.0 sec)	Average Delay (sec/veh):	9.5
Optimal Cycle:	0	Level Of Service:	A

Street Name:	Madison St							Victoria Ave (South)					
Approach:	North Bound			South Bound			East Bound			West Bound			
Movement:	L	- T	- R	L	- T	- R	L	- T	- R	L	- T	- R	
Control:	Stop Sign			Stop Sign			Stop Sign			Stop Sign			
Rights:	Include			Include			Include			Include			
Min. Green:	7	7	7	7	7	7	7	7	7	7	7	7	
Lanes:	0 0	0 1	0	0 1	0 0	0	0 0	1! 0	0	0 0	0 0	0	
Volume Module:													
Base Vol:	0	49	6	53	33	0	50	277	6	0	0	0	
Growth Adj:	1.00	1.00	1.00	1.00	1.00	1.00	1.00	1.00	1.00	1.00	1.00	1.00	
Initial Bse:	0	49	6	53	33	0	50	277	6	0	0	0	
Added Vol:	0	0	0	0	0	0	0	0	0	0	0	0	
PasserByVol:	0	0	0	0	0	0	0	0	0	0	0	0	
Initial Fut:	0	49	6	53	33	0	50	277	6	0	0	0	
User Adj:	1.00	1.00	1.00	1.00	1.00	1.00	1.00	1.00	1.00	1.00	1.00	1.00	
PHF Adj:	1.00	1.00	1.00	1.00	1.00	1.00	1.00	1.00	1.00	1.00	1.00	1.00	
PHF Volume:	0	49	6	53	33	0	50	277	6	0	0	0	
Reduct Vol:	0	0	0	0	0	0	0	0	0	0	0	0	
Reduced Vol:	0	49	6	53	33	0	50	277	6	0	0	0	
PCE Adj:	1.00	1.00	1.00	1.00	1.00	1.00	1.00	1.00	1.00	1.00	1.00	1.00	
MLF Adj:	1.00	1.00	1.00	1.00	1.00	1.00	1.00	1.00	1.00	1.00	1.00	1.00	
FinalVolume:	0	49	6	53	33	0	50	277	6	0	0	0	
Saturation Flow Module:													
Adjustment:	1.00	1.00	1.00	1.00	1.00	1.00	1.00	1.00	1.00	1.00	1.00	1.00	
Lanes:	0.00	0.89	0.11	0.62	0.38	0.00	0.15	0.83	0.02	0.00	0.00	0.00	
Final Sat.:	0	645	79	434	271	0	125	691	15	0	0	0	
Capacity Analysis Module:													
Vol/Sat:	xxxx	0.08	0.08	0.12	0.12	xxxx	0.40	0.40	0.40	xxxx	xxxx	xxxx	
Crit Moves:			****	****				****					
Delay/Veh:	0.0	8.0	8.0	8.4	8.4	0.0	10.0	10.0	10.0	0.0	0.0	0.0	
Delay Adj:	1.00	1.00	1.00	1.00	1.00	1.00	1.00	1.00	1.00	1.00	1.00	1.00	
AdjDel/Veh:	0.0	8.0	8.0	8.4	8.4	0.0	10.0	10.0	10.0	0.0	0.0	0.0	
LOS by Move:	*	A	A	A	A	*	A	A	A	*	*	*	
ApproachDel:	8.0			8.4			10.0			xxxxxx			
Delay Adj:	1.00			1.00			1.00			xxxxx			
ApprAdjDel:	8.0			8.4			10.0			xxxxxx			
LOS by Appr:	A			A			A			*			
AllWayAvgQ:	0.1	0.1	0.1	0.1	0.1	0.1	0.6	0.6	0.6	0.0	0.0	0.0	

Overlook Parkway Extension
Existing
AM Peak Hour

Note: Queue reported is the number of cars per lane.

Overlook Parkway Extension
Existing
AM Peak Hour

Level Of Service Computation Report
2000 HCM 4-Way Stop Method (Future Volume Alternative)

Intersection #81 Washington St/Victoria Ave (North)

Cycle (sec):	100	Critical Vol./Cap.(X):	0.527
Loss Time (sec):	0 (Y+R=4.0 sec)	Average Delay (sec/veh):	13.7
Optimal Cycle:	0	Level Of Service:	B

Street Name:	Washington St							Victoria Ave (North)					
Approach:	North Bound			South Bound			East Bound			West Bound			
Movement:	L	- T	- R	L	- T	- R	L	- T	- R	L	- T	- R	
Control:	Stop Sign			Stop Sign			Stop Sign			Stop Sign			
Rights:	Include			Include			Include			Include			
Min. Green:	7	7	7	7	7	7	7	7	7	7	7	7	
Lanes:	0 1	1 0	0	0 0	0 1	0	0 0	0 0	0	1 0	0 1	0	
Volume Module:													
Base Vol:	165	444	0	0	137	11	0	0	0	132	223	31	
Growth Adj:	1.00	1.00	1.00	1.00	1.00	1.00	1.00	1.00	1.00	1.00	1.00	1.00	
Initial Bse:	165	444	0	0	137	11	0	0	0	132	223	31	
Added Vol:	0	0	0	0	0	0	0	0	0	0	0	0	
PasserByVol:	0	0	0	0	0	0	0	0	0	0	0	0	
Initial Fut:	165	444	0	0	137	11	0	0	0	132	223	31	
User Adj:	1.00	1.00	1.00	1.00	1.00	1.00	1.00	1.00	1.00	1.00	1.00	1.00	
PHF Adj:	1.00	1.00	1.00	1.00	1.00	1.00	1.00	1.00	1.00	1.00	1.00	1.00	
PHF Volume:	165	444	0	0	137	11	0	0	0	132	223	31	
Reduct Vol:	0	0	0	0	0	0	0	0	0	0	0	0	
Reduced Vol:	165	444	0	0	137	11	0	0	0	132	223	31	
PCE Adj:	1.00	1.00	1.00	1.00	1.00	1.00	1.00	1.00	1.00	1.00	1.00	1.00	
MLF Adj:	1.00	1.00	1.00	1.00	1.00	1.00	1.00	1.00	1.00	1.00	1.00	1.00	
FinalVolume:	165	444	0	0	137	11	0	0	0	132	223	31	
Saturation Flow Module:													
Adjustment:	1.00	1.00	1.00	1.00	1.00	1.00	1.00	1.00	1.00	1.00	1.00	1.00	
Lanes:	0.54	1.46	0.00	0.00	0.93	0.07	0.00	0.00	0.00	1.00	0.88	0.12	
Final Sat.:	313	868	0	0	517	41	0	0	0	509	489	68	
Capacity Analysis Module:													
Vol/Sat:	0.53	0.51	xxxx	xxxx	0.27	0.27	xxxx	xxxx	xxxx	0.26	0.46	0.46	
Crit Moves:	****				****						****		
Delay/Veh:	15.2	14.5	0.0	0.0	11.4	11.4	0.0	0.0	0.0	11.8	13.8	13.8	
Delay Adj:	1.00	1.00	1.00	1.00	1.00	1.00	1.00	1.00	1.00	1.00	1.00	1.00	
AdjDel/Veh:	15.2	14.5	0.0	0.0	11.4	11.4	0.0	0.0	0.0	11.8	13.8	13.8	
LOS by Move:	C	B	*	*	B	B	*	*	*	B	B	B	
ApproachDel:	14.7			11.4			xxxxxx			13.1			
Delay Adj:	1.00			1.00			xxxxx			1.00			
ApprAdjDel:	14.7			11.4			xxxxxx			13.1			
LOS by Appr:	B			B			*			B			
AllWayAvgQ:	1.0	0.9	0.0	0.3	0.3	0.3	0.0	0.0	0.0	0.3	0.7	0.7	

Overlook Parkway Extension
Existing
AM Peak Hour

Note: Queue reported is the number of cars per lane.

Overlook Parkway Extension
Existing
AM Peak Hour

Level Of Service Computation Report
2000 HCM 4-Way Stop Method (Future Volume Alternative)

Intersection #82 Washington St/Victoria Ave (South)

Cycle (sec):	100	Critical Vol./Cap.(X):	0.520
Loss Time (sec):	0 (Y+R=4.0 sec)	Average Delay (sec/veh):	13.7
Optimal Cycle:	0	Level Of Service:	B

Street Name:	Washington St						Victoria Ave (South)					
Approach:	North Bound			South Bound			East Bound			West Bound		
Movement:	L	- T	- R	L	- T	- R	L	- T	- R	L	- T	- R
Control:	Stop Sign			Stop Sign			Stop Sign			Stop Sign		
Rights:	Include			Include			Include			Include		
Min. Green:	7	7	7	7	7	7	7	7	7	7	7	7
Lanes:	0 0	2 0	1	0 1	0 0	0	0 1	0 0	1	0 0	0 0	0
Volume Module:												
Base Vol:	0	597	362	17	252	0	12	213	62	0	0	0
Growth Adj:	1.00	1.00	1.00	1.00	1.00	1.00	1.00	1.00	1.00	1.00	1.00	1.00
Initial Bse:	0	597	362	17	252	0	12	213	62	0	0	0
Added Vol:	0	0	0	0	0	0	0	0	0	0	0	0
PasserByVol:	0	0	0	0	0	0	0	0	0	0	0	0
Initial Fut:	0	597	362	17	252	0	12	213	62	0	0	0
User Adj:	1.00	1.00	1.00	1.00	1.00	1.00	1.00	1.00	1.00	1.00	1.00	1.00
PHF Adj:	1.00	1.00	1.00	1.00	1.00	1.00	1.00	1.00	1.00	1.00	1.00	1.00
PHF Volume:	0	597	362	17	252	0	12	213	62	0	0	0
Reduct Vol:	0	0	0	0	0	0	0	0	0	0	0	0
Reduced Vol:	0	597	362	17	252	0	12	213	62	0	0	0
PCE Adj:	1.00	1.00	1.00	1.00	1.00	1.00	1.00	1.00	1.00	1.00	1.00	1.00
MLF Adj:	1.00	1.00	1.00	1.00	1.00	1.00	1.00	1.00	1.00	1.00	1.00	1.00
FinalVolume:	0	597	362	17	252	0	12	213	62	0	0	0
Saturation Flow Module:												
Adjustment:	1.00	1.00	1.00	1.00	1.00	1.00	1.00	1.00	1.00	1.00	1.00	1.00
Lanes:	0.00	2.00	1.00	0.06	0.94	0.00	0.05	0.95	1.00	0.00	0.00	0.00
Final Sat.:	0	1226	696	36	530	0	27	471	549	0	0	0
Capacity Analysis Module:												
Vol/Sat:	xxxx	0.49	0.52	0.48	0.48	xxxx	0.45	0.45	0.11	xxxx	xxxx	xxxx
Crit Moves:			****		****			****				
Delay/Veh:	0.0	13.8	13.0	14.6	14.6	0.0	14.8	14.8	9.7	0.0	0.0	0.0
Delay Adj:	1.00	1.00	1.00	1.00	1.00	1.00	1.00	1.00	1.00	1.00	1.00	1.00
AdjDel/Veh:	0.0	13.8	13.0	14.6	14.6	0.0	14.8	14.8	9.7	0.0	0.0	0.0
LOS by Move:	*	B	B	B	B	*	B	B	A	*	*	*
ApproachDel:		13.5			14.6			13.7			xxxxxx	
Delay Adj:		1.00			1.00			1.00			xxxxx	
ApprAdjDel:		13.5			14.6			13.7			xxxxxx	
LOS by Appr:		B			B			B			*	
AllWayAvgQ:	0.0	0.9	1.0	0.8	0.8	0.8	0.7	0.7	0.1	0.0	0.0	0.0

Overlook Parkway Extension
Existing
AM Peak Hour

Note: Queue reported is the number of cars per lane.

Overlook Parkway Extension
Existing
AM Peak Hour

Level Of Service Computation Report
2000 HCM 4-Way Stop Method (Future Volume Alternative)

Intersection #221 Mary St/Victoria Ave (North)

Cycle (sec):	100	Critical Vol./Cap.(X):	0.678
Loss Time (sec):	0 (Y+R=4.0 sec)	Average Delay (sec/veh):	16.3
Optimal Cycle:	0	Level Of Service:	C

Street Name:	Mary St							Victoria Ave (North)					
Approach:	North Bound			South Bound			East Bound			West Bound			
Movement:	L	- T	- R	L	- T	- R	L	- T	- R	L	- T	- R	
Control:	Stop Sign			Stop Sign			Stop Sign			Stop Sign			
Rights:	Include			Include			Include			Include			
Min. Green:	7	7	7	7	7	7	7	7	7	7	7	7	
Lanes:	0 1	0 0	0	0 0	0 1	0	0 0	0 0	0	0 0	1! 0	0	
Volume Module:													
Base Vol:	18	428	0	0	105	62	0	0	0	49	263	116	
Growth Adj:	1.00	1.00	1.00	1.00	1.00	1.00	1.00	1.00	1.00	1.00	1.00	1.00	
Initial Bse:	18	428	0	0	105	62	0	0	0	49	263	116	
Added Vol:	0	0	0	0	0	0	0	0	0	0	0	0	
PasserByVol:	0	0	0	0	0	0	0	0	0	0	0	0	
Initial Fut:	18	428	0	0	105	62	0	0	0	49	263	116	
User Adj:	1.00	1.00	1.00	1.00	1.00	1.00	1.00	1.00	1.00	1.00	1.00	1.00	
PHF Adj:	1.00	1.00	1.00	1.00	1.00	1.00	1.00	1.00	1.00	1.00	1.00	1.00	
PHF Volume:	18	428	0	0	105	62	0	0	0	49	263	116	
Reduct Vol:	0	0	0	0	0	0	0	0	0	0	0	0	
Reduced Vol:	18	428	0	0	105	62	0	0	0	49	263	116	
PCE Adj:	1.00	1.00	1.00	1.00	1.00	1.00	1.00	1.00	1.00	1.00	1.00	1.00	
MLF Adj:	1.00	1.00	1.00	1.00	1.00	1.00	1.00	1.00	1.00	1.00	1.00	1.00	
FinalVolume:	18	428	0	0	105	62	0	0	0	49	263	116	
Saturation Flow Module:													
Adjustment:	1.00	1.00	1.00	1.00	1.00	1.00	1.00	1.00	1.00	1.00	1.00	1.00	
Lanes:	0.04	0.96	0.00	0.00	0.63	0.37	0.00	0.00	0.00	0.11	0.62	0.27	
Final Sat.:	27	631	0	0	385	227	0	0	0	75	404	178	
Capacity Analysis Module:													
Vol/Sat:	0.68	0.68	xxxx	xxxx	0.27	0.27	xxxx	xxxx	xxxx	0.65	0.65	0.65	
Crit Moves:		****			****							****	
Delay/Veh:	18.0	18.0	0.0	0.0	10.4	10.4	0.0	0.0	0.0	16.8	16.8	16.8	
Delay Adj:	1.00	1.00	1.00	1.00	1.00	1.00	1.00	1.00	1.00	1.00	1.00	1.00	
AdjDel/Veh:	18.0	18.0	0.0	0.0	10.4	10.4	0.0	0.0	0.0	16.8	16.8	16.8	
LOS by Move:	C	C	*	*	B	B	*	*	*	C	C	C	
ApproachDel:	18.0				10.4		xxxxxx			16.8			
Delay Adj:	1.00				1.00		xxxxx			1.00			
ApprAdjDel:	18.0				10.4		xxxxxx			16.8			
LOS by Appr:	C				B		*			C			
AllWayAvgQ:	1.8	1.8	1.8	0.3	0.3	0.3	0.0	0.0	0.0	1.5	1.5	1.5	

Overlook Parkway Extension
Existing
AM Peak Hour

Note: Queue reported is the number of cars per lane.

Overlook Parkway Extension
Existing
AM Peak Hour

Level Of Service Computation Report
2000 HCM 4-Way Stop Method (Future Volume Alternative)

Intersection #222 Mary St/Victoria Ave (South)

Cycle (sec):	100	Critical Vol./Cap.(X):	0.522
Loss Time (sec):	0 (Y+R=4.0 sec)	Average Delay (sec/veh):	12.3
Optimal Cycle:	0	Level Of Service:	B

Street Name:	Mary St									Victoria Ave (South)							
Approach:	North Bound				South Bound				East Bound				West Bound				
Movement:	L	-	T	-	R	L	-	T	-	R	L	-	T	-	R	L	-	T	-	R
Control:	Stop Sign					Stop Sign					Stop Sign					Stop Sign				
Rights:	Include					Include					Include					Include				
Min. Green:	7	7	7			7	7	7			7	7	7			7	7	7		
Lanes:	0	0	0	1	0	0	1	0	0	0	1	0	0	1	0	0	0	0	0	0
Volume Module:																				
Base Vol:	0	137	100			48	106			0	309	260			0	0	0	0		0
Growth Adj:	1.00	1.00	1.00			1.00	1.00			1.00	1.00	1.00			1.00	1.00	1.00	1.00		1.00
Initial Bse:	0	137	100			48	106			0	309	260			0	0	0	0		0
Added Vol:	0	0	0			0	0			0	0	0			0	0	0	0		0
PasserByVol:	0	0	0			0	0			0	0	0			0	0	0	0		0
Initial Fut:	0	137	100			48	106			0	309	260			0	0	0	0		0
User Adj:	1.00	1.00	1.00			1.00	1.00			1.00	1.00	1.00			1.00	1.00	1.00	1.00		1.00
PHF Adj:	1.00	1.00	1.00			1.00	1.00			1.00	1.00	1.00			1.00	1.00	1.00	1.00		1.00
PHF Volume:	0	137	100			48	106			0	309	260			0	0	0	0		0
Reduct Vol:	0	0	0			0	0			0	0	0			0	0	0	0		0
Reduced Vol:	0	137	100			48	106			0	309	260			0	0	0	0		0
PCE Adj:	1.00	1.00	1.00			1.00	1.00			1.00	1.00	1.00			1.00	1.00	1.00	1.00		1.00
MLF Adj:	1.00	1.00	1.00			1.00	1.00			1.00	1.00	1.00			1.00	1.00	1.00	1.00		1.00
FinalVolume:	0	137	100			48	106			0	309	260			0	0	0	0		0
Saturation Flow Module:																				
Adjustment:	1.00	1.00	1.00			1.00	1.00			1.00	1.00	1.00			1.00	1.00	1.00	1.00		1.00
Lanes:	0.00	0.58	0.42			0.31	0.69			0.00	1.00	1.00			0.00	0.00	0.00	0.00		0.00
Final Sat.:	0	385	281			191	422			0	592	644			0	0	0	0		0
Capacity Analysis Module:																				
Vol/Sat:	xxxx	0.36	0.36			0.25	0.25			xxxx	0.52	0.40			xxxx	xxxx	xxxx	xxxx		
Crit Moves:			****			****					****									
Delay/Veh:	0.0	10.9	10.9			10.4	10.4			0.0	14.8	11.7			0.0	0.0	0.0	0.0		
Delay Adj:	1.00	1.00	1.00			1.00	1.00			1.00	1.00	1.00			1.00	1.00	1.00	1.00		
AdjDel/Veh:	0.0	10.9	10.9			10.4	10.4			0.0	14.8	11.7			0.0	0.0	0.0	0.0		
LOS by Move:	*	B	B			B	B			*	B	B			*	*	*	*		
ApproachDel:	10.9					10.4					13.4					xxxxxx				
Delay Adj:	1.00					1.00					1.00					xxxxx				
ApprAdjDel:	10.9					10.4					13.4					xxxxxx				
LOS by Appr:	B					B					B					*				
AllWayAvgQ:	0.5	0.5	0.5			0.3	0.3			0.3	1.0	0.6			0.6	0.0	0.0	0.0		

Overlook Parkway Extension
Existing
AM Peak Hour

Note: Queue reported is the number of cars per lane.

Overlook Parkway Extension
Existing
PM Peak Hour

Scenario Report

Scenario:	Existing PM
Command:	Existing PM
Volume:	Existing PM
Geometry:	Existing
Impact Fee:	Default Impact Fee
Trip Generation:	none
Trip Distribution:	none
Paths:	Default Path
Routes:	Default Route
Configuration:	Existing PM

Overlook Parkway Extension
Existing
PM Peak Hour

Impact Analysis Report
Level Of Service

Intersection	Base LOS	Base Del/ Veh	Base V/ C	Future LOS	Future Del/ Veh	Future V/ C	Change in
# 1 Madison St/SR-91 WB Ramps	C	25.9	0.543	C	25.9	0.543	+ 0.000 D/V
# 2 Madison St/SR-91 EB Ramps	C	25.7	0.525	C	25.7	0.525	+ 0.000 D/V
# 3 Madison St/Indiana Ave	D	37.0	0.742	D	37.0	0.742	+ 0.000 D/V
# 4 Madison St/Lincoln Ave	C	29.8	0.328	C	29.8	0.328	+ 0.000 D/V
# 6 Washington St/Indiana Ave	C	23.7	0.456	C	23.7	0.456	+ 0.000 D/V
# 7 Washington St/Lincoln Ave	B	14.8	0.603	B	14.8	0.603	+ 0.000 V/C
# 9 Washington St/Overlook Pkwy	B	11.6	0.213	B	11.6	0.213	+ 0.000 D/V
# 10 Riverside Ave-SR-91 WB/Arlingt	C	30.8	0.750	C	30.8	0.750	+ 0.000 D/V
# 11 Indiana Ave-SR-91 EB/Arlington	C	27.4	0.653	C	27.4	0.653	+ 0.000 D/V
# 12 Victoria Ave/Arlington Ave	C	33.7	0.794	C	33.7	0.794	+ 0.000 D/V
# 13 Alessandro Blvd/Arlington Ave	D	41.6	0.910	D	41.6	0.910	+ 0.000 D/V
# 14 Alessandro Blvd/Overlook Pkwy	C	27.9	0.794	C	27.9	0.794	+ 0.000 D/V
# 15 Alessandro Blvd/Trautwein Rd	C	20.8	0.637	C	20.8	0.637	+ 0.000 D/V
# 16 Crystal View Ter/Overlook Pkwy	A	7.4	0.101	A	7.4	0.101	+ 0.000 V/C
# 17 Kingdom Dr/Overlook Pkwy	A	9.7	0.000	A	9.7	0.000	+ 0.000 D/V
# 18 Kingdom Dr/Green Orchard Pl	A	8.5	0.000	A	8.5	0.000	+ 0.000 D/V
# 19 Trautwein Rd/John F. Kennedy D	B	19.3	0.632	B	19.3	0.632	+ 0.000 D/V
# 20 Washington St/Bradley St	C	24.4	0.612	C	24.4	0.612	+ 0.000 D/V
# 21 Alessandro Blvd/Via Vista Dr	C	21.1	0.810	C	21.1	0.810	+ 0.000 D/V
# 23 Mary St/Hawarden Dr	A	7.7	0.207	A	7.7	0.207	+ 0.000 V/C
# 24 Hawarden Dr/Overlook Pkwy	A	7.8	0.094	A	7.8	0.094	+ 0.000 V/C
# 25 Crystal View Ter/Berry Rd	A	7.4	0.102	A	7.4	0.102	+ 0.000 V/C
# 26 Corinthian Wy/Berry Rd	A	7.4	0.101	A	7.4	0.101	+ 0.000 V/C

Overlook Parkway Extension
Existing
PM Peak Hour

Intersection	Base LOS	Base Del/ Veh	Base V/ C	Future LOS	Future Del/ Veh	Future V/ C	Change in
# 28 Orozco Dr/Overlook Pkwy	A	9.7	0.000	A	9.7	0.000	+ 0.000 D/V
# 51 Madison St/Victoria Ave (North	A	9.7	0.328	A	9.7	0.328	+ 0.000 V/C
# 52 Madison St/Victoria Ave (South	B	10.3	0.436	B	10.3	0.436	+ 0.000 V/C
# 81 Washington St/Victoria Ave (No	B	14.4	0.570	B	14.4	0.570	+ 0.000 V/C
# 82 Washington St/Victoria Ave (So	E	37.1	1.042	E	37.1	1.042	+ 0.000 V/C
#221 Mary St/Victoria Ave (North)	C	16.7	0.685	C	16.7	0.685	+ 0.000 V/C
#222 Mary St/Victoria Ave (South)	B	11.7	0.495	B	11.7	0.495	+ 0.000 V/C

Overlook Parkway Extension
Existing
PM Peak Hour

Level Of Service Computation Report
2000 HCM Operations Method (Future Volume Alternative)

Intersection #1 Madison St/SR-91 WB Ramps

Cycle (sec): 100 Critical Vol./Cap.(X): 0.543
Loss Time (sec): 12 (Y+R=4.0 sec) Average Delay (sec/veh): 25.9
Optimal Cycle: 50 Level Of Service: C

Street Name:	Madison St						SR-91 WB Ramps					
Approach:	North Bound			South Bound			East Bound			West Bound		
Movement:	L	T	R	L	T	R	L	T	R	L	T	R
Control:	Protected			Protected			Split Phase			Split Phase		
Rights:	Include			Include			Include			Include		
Min. Green:	7	7	7	7	7	7	7	7	7	7	7	7
Lanes:	1 0	2 0	0	0 0	3 0	1	0 0	0 0	0	0 1	0 0	1
Volume Module:												
Base Vol:	331	615	0	0	620	287	0	0	0	203	2	180
Growth Adj:	1.00	1.00	1.00	1.00	1.00	1.00	1.00	1.00	1.00	1.00	1.00	1.00
Initial Bse:	331	615	0	0	620	287	0	0	0	203	2	180
Added Vol:	0	0	0	0	0	0	0	0	0	0	0	0
PasserByVol:	0	0	0	0	0	0	0	0	0	0	0	0
Initial Fut:	331	615	0	0	620	287	0	0	0	203	2	180
User Adj:	1.00	1.00	1.00	1.00	1.00	1.00	1.00	1.00	1.00	1.00	1.00	1.00
PHF Adj:	1.00	1.00	1.00	1.00	1.00	1.00	1.00	1.00	1.00	1.00	1.00	1.00
PHF Volume:	331	615	0	0	620	287	0	0	0	203	2	180
Reduct Vol:	0	0	0	0	0	0	0	0	0	0	0	0
Reduced Vol:	331	615	0	0	620	287	0	0	0	203	2	180
PCE Adj:	1.00	1.00	1.00	1.00	1.00	1.00	1.00	1.00	1.00	1.00	1.00	1.00
MLF Adj:	1.00	1.00	1.00	1.00	1.00	1.00	1.00	1.00	1.00	1.00	1.00	1.00
FinalVolume:	331	615	0	0	620	287	0	0	0	203	2	180
Saturation Flow Module:												
Sat/Lane:	1900	1900	1900	1900	1900	1900	1900	1900	1900	1900	1900	1900
Adjustment:	0.95	0.95	1.00	1.00	0.91	0.85	1.00	1.00	1.00	0.92	0.92	0.85
Lanes:	1.00	2.00	0.00	0.00	3.00	1.00	0.00	0.00	0.00	0.99	0.01	1.00
Final Sat.:	1805	3610	0	0	5187	1615	0	0	0	1733	17	1615
Capacity Analysis Module:												
Vol/Sat:	0.18	0.17	0.00	0.00	0.12	0.18	0.00	0.00	0.00	0.12	0.12	0.11
Crit Moves:	****					****				****		
Green/Cycle:	0.34	0.47	0.00	0.00	0.33	0.33	0.00	0.00	0.00	0.22	0.22	0.22
Volume/Cap:	0.54	0.36	0.00	0.00	0.37	0.54	0.00	0.00	0.00	0.54	0.54	0.52
Delay/Veh:	27.9	17.0	0.0	0.0	25.9	28.7	0.0	0.0	0.0	36.5	36.5	36.0
User DelAdj:	1.00	1.00	1.00	1.00	1.00	1.00	1.00	1.00	1.00	1.00	1.00	1.00
AdjDel/Veh:	27.9	17.0	0.0	0.0	25.9	28.7	0.0	0.0	0.0	36.5	36.5	36.0
LOS by Move:	C	B	A	A	C	C	A	A	A	D	D	D
HCM2kAvgQ:	9	6	0	0	5	8	0	0	0	6	6	5

Note: Queue reported is the number of cars per lane.

Traffix 7.9.0215 (c) 2008 Dowling Assoc. Licensed to MMA, LONG BEACH, CA

Overlook Parkway Extension
Existing
PM Peak Hour

Level Of Service Computation Report
2000 HCM Operations Method (Future Volume Alternative)

Intersection #2 Madison St/SR-91 EB Ramps

Cycle (sec): 100 Critical Vol./Cap.(X): 0.525
Loss Time (sec): 12 (Y+R=4.0 sec) Average Delay (sec/veh): 25.7
Optimal Cycle: 50 Level Of Service: C

Street Name:	Madison St						SR-91 EB Ramps					
Approach:	North Bound			South Bound			East Bound			West Bound		
Movement:	L	T	R	L	T	R	L	T	R	L	T	R
Control:	Protected			Protected			Protected			Protected		
Rights:	Include			Include			Include			Include		
Min. Green:	7	7	7	7	7	7	7	7	7	7	7	7
Lanes:	0 0	3 0	1	1 0	2 0	0	0 1	0 0	1	0 0	0 0	0
Volume Module:												
Base Vol:	0	720	315	212	649	0	218	4	241	0	0	0
Growth Adj:	1.00	1.00	1.00	1.00	1.00	1.00	1.00	1.00	1.00	1.00	1.00	1.00
Initial Bse:	0	720	315	212	649	0	218	4	241	0	0	0
Added Vol:	0	0	0	0	0	0	0	0	0	0	0	0
PasserByVol:	0	0	0	0	0	0	0	0	0	0	0	0
Initial Fut:	0	720	315	212	649	0	218	4	241	0	0	0
User Adj:	1.00	1.00	1.00	1.00	1.00	1.00	1.00	1.00	1.00	1.00	1.00	1.00
PHF Adj:	1.00	1.00	1.00	1.00	1.00	1.00	1.00	1.00	1.00	1.00	1.00	1.00
PHF Volume:	0	720	315	212	649	0	218	4	241	0	0	0
Reduct Vol:	0	0	0	0	0	0	0	0	0	0	0	0
Reduced Vol:	0	720	315	212	649	0	218	4	241	0	0	0
PCE Adj:	1.00	1.00	1.00	1.00	1.00	1.00	1.00	1.00	1.00	1.00	1.00	1.00
MLF Adj:	1.00	1.00	1.00	1.00	1.00	1.00	1.00	1.00	1.00	1.00	1.00	1.00
FinalVolume:	0	720	315	212	649	0	218	4	241	0	0	0
Saturation Flow Module:												
Sat/Lane:	1900	1900	1900	1900	1900	1900	1900	1900	1900	1900	1900	1900
Adjustment:	1.00	0.91	0.85	0.95	0.95	1.00	0.93	0.93	0.85	1.00	1.00	1.00
Lanes:	0.00	3.00	1.00	1.00	2.00	0.00	0.98	0.02	1.00	0.00	0.00	0.00
Final Sat.:	0	5187	1615	1805	3610	0	1733	32	1615	0	0	0
Capacity Analysis Module:												
Vol/Sat:	0.00	0.14	0.20	0.12	0.18	0.00	0.13	0.13	0.15	0.00	0.00	0.00
Crit Moves:			****	****					****			
Green/Cycle:	0.00	0.37	0.37	0.22	0.43	0.00	0.23	0.28	0.28	0.00	0.00	0.00
Volume/Cap:	0.00	0.37	0.52	0.52	0.42	0.00	0.55	0.44	0.52	0.00	0.00	0.00
Delay/Veh:	0.0	23.0	25.4	35.4	20.1	0.0	35.8	29.9	31.2	0.0	0.0	0.0
User DelAdj:	1.00	1.00	1.00	1.00	1.00	1.00	1.00	1.00	1.00	1.00	1.00	1.00
AdjDel/Veh:	0.0	23.0	25.4	35.4	20.1	0.0	35.8	29.9	31.2	0.0	0.0	0.0
LOS by Move:	A	C	C	D	C	A	D	C	C	A	A	A
HCM2kAvgQ:	0	6	8	6	7	0	7	6	7	0	0	0

Note: Queue reported is the number of cars per lane.

Traffix 7.9.0215 (c) 2008 Dowling Assoc. Licensed to MMA, LONG BEACH, CA

Overlook Parkway Extension
Existing
PM Peak Hour

Level Of Service Computation Report
2000 HCM Operations Method (Future Volume Alternative)

Intersection #3 Madison St/Indiana Ave

Cycle (sec):	100	Critical Vol./Cap.(X):	0.742
Loss Time (sec):	16 (Y+R=4.0 sec)	Average Delay (sec/veh):	37.0
Optimal Cycle:	75	Level Of Service:	D

Street Name:	Madison St						Indiana Ave					
Approach:	North Bound			South Bound			East Bound			West Bound		
Movement:	L -	T -	R	L -	T -	R	L -	T -	R	L -	T -	R
Control:	Protected			Protected			Protected			Protected		
Rights:	Include			Include			Include			Include		
Min. Green:	7	7	7	7	7	7	7	7	7	7	7	7
Lanes:	1 0	1 1	0	1 0	1 1	0	1 0	1 1	0	1 0	1 1	0
Volume Module:												
Base Vol:	51	443	30	245	518	94	211	373	63	40	255	391
Growth Adj:	1.00	1.00	1.00	1.00	1.00	1.00	1.00	1.00	1.00	1.00	1.00	1.00
Initial Bse:	51	443	30	245	518	94	211	373	63	40	255	391
Added Vol:	0	0	0	0	0	0	0	0	0	0	0	0
PasserByVol:	0	0	0	0	0	0	0	0	0	0	0	0
Initial Fut:	51	443	30	245	518	94	211	373	63	40	255	391
User Adj:	1.00	1.00	1.00	1.00	1.00	1.00	1.00	1.00	1.00	1.00	1.00	1.00
PHF Adj:	1.00	1.00	1.00	1.00	1.00	1.00	1.00	1.00	1.00	1.00	1.00	1.00
PHF Volume:	51	443	30	245	518	94	211	373	63	40	255	391
Reduct Vol:	0	0	0	0	0	0	0	0	0	0	0	0
Reduced Vol:	51	443	30	245	518	94	211	373	63	40	255	391
PCE Adj:	1.00	1.00	1.00	1.00	1.00	1.00	1.00	1.00	1.00	1.00	1.00	1.00
MLF Adj:	1.00	1.00	1.00	1.00	1.00	1.00	1.00	1.00	1.00	1.00	1.00	1.00
FinalVolume:	51	443	30	245	518	94	211	373	63	40	255	391
Saturation Flow Module:												
Sat/Lane:	1900	1900	1900	1900	1900	1900	1900	1900	1900	1900	1900	1900
Adjustment:	0.95	0.94	0.94	0.95	0.93	0.93	0.95	0.93	0.93	0.95	0.86	0.86
Lanes:	1.00	1.87	0.13	1.00	1.69	0.31	1.00	1.71	0.29	1.00	1.00	1.00
Final Sat.:	1805	3351	227	1805	2985	542	1805	3020	510	1805	1641	1641
Capacity Analysis Module:												
Vol/Sat:	0.03	0.13	0.13	0.14	0.17	0.17	0.12	0.12	0.12	0.02	0.16	0.24
Crit Moves:		****		****			****					****
Green/Cycle:	0.10	0.18	0.18	0.18	0.26	0.26	0.16	0.31	0.31	0.17	0.32	0.32
Volume/Cap:	0.27	0.74	0.74	0.74	0.67	0.67	0.74	0.40	0.40	0.13	0.48	0.74
Delay/Veh:	42.1	43.6	43.6	47.3	35.4	35.4	50.2	27.8	27.8	35.1	27.6	33.7
User DelAdj:	1.00	1.00	1.00	1.00	1.00	1.00	1.00	1.00	1.00	1.00	1.00	1.00
AdjDel/Veh:	42.1	43.6	43.6	47.3	35.4	35.4	50.2	27.8	27.8	35.1	27.6	33.7
LOS by Move:	D	D	D	D	D	D	D	C	C	D	C	C
HCM2kAvgQ:	2	9	9	9	10	10	8	6	6	1	7	13

Note: Queue reported is the number of cars per lane.

Traffix 7.9.0215 (c) 2008 Dowling Assoc. Licensed to MMA, LONG BEACH, CA

Overlook Parkway Extension
Existing
PM Peak Hour

Level Of Service Computation Report
2000 HCM Operations Method (Future Volume Alternative)

Intersection #4 Madison St/Lincoln Ave

Cycle (sec):	100	Critical Vol./Cap.(X):	0.328
Loss Time (sec):	16 (Y+R=4.0 sec)	Average Delay (sec/veh):	29.8
Optimal Cycle:	50	Level Of Service:	C

Street Name:	Madison St						Lincoln Ave					
Approach:	North Bound			South Bound			East Bound			West Bound		
Movement:	L -	T -	R	L -	T -	R	L -	T -	R	L -	T -	R
Control:	Protected			Protected			Protected			Protected		
Rights:	Include			Include			Include			Include		
Min. Green:	7	7	7	7	7	7	7	7	7	7	7	7
Lanes:	1 0	0 1	0	1 0	0 1	0	1 0	0 1	0	1 0	1 1	0
Volume Module:												
Base Vol:	7	118	4	94	210	69	106	204	14	6	138	98
Growth Adj:	1.00	1.00	1.00	1.00	1.00	1.00	1.00	1.00	1.00	1.00	1.00	1.00
Initial Bse:	7	118	4	94	210	69	106	204	14	6	138	98
Added Vol:	0	0	0	0	0	0	0	0	0	0	0	0
PasserByVol:	0	0	0	0	0	0	0	0	0	0	0	0
Initial Fut:	7	118	4	94	210	69	106	204	14	6	138	98
User Adj:	1.00	1.00	1.00	1.00	1.00	1.00	1.00	1.00	1.00	1.00	1.00	1.00
PHF Adj:	1.00	1.00	1.00	1.00	1.00	1.00	1.00	1.00	1.00	1.00	1.00	1.00
PHF Volume:	7	118	4	94	210	69	106	204	14	6	138	98
Reduct Vol:	0	0	0	0	0	0	0	0	0	0	0	0
Reduced Vol:	7	118	4	94	210	69	106	204	14	6	138	98
PCE Adj:	1.00	1.00	1.00	1.00	1.00	1.00	1.00	1.00	1.00	1.00	1.00	1.00
MLF Adj:	1.00	1.00	1.00	1.00	1.00	1.00	1.00	1.00	1.00	1.00	1.00	1.00
FinalVolume:	7	118	4	94	210	69	106	204	14	6	138	98
Saturation Flow Module:												
Sat/Lane:	1900	1900	1900	1900	1900	1900	1900	1900	1900	1900	1900	1900
Adjustment:	0.95	1.00	1.00	0.95	0.96	0.96	0.95	0.99	0.99	0.95	0.89	0.89
Lanes:	1.00	0.97	0.03	1.00	0.75	0.25	1.00	0.94	0.06	1.00	1.17	0.83
Final Sat.:	1805	1829	62	1805	1377	453	1805	1760	121	1805	1980	1406
Capacity Analysis Module:												
Vol/Sat:	0.00	0.06	0.06	0.05	0.15	0.15	0.06	0.12	0.12	0.00	0.07	0.07
Crit Moves:	****				****			****		****		
Green/Cycle:	0.07	0.23	0.23	0.23	0.40	0.40	0.19	0.30	0.30	0.07	0.19	0.19
Volume/Cap:	0.06	0.28	0.28	0.22	0.38	0.38	0.32	0.38	0.38	0.05	0.37	0.37
Delay/Veh:	43.6	31.7	31.7	31.2	21.7	21.7	35.7	28.0	28.0	43.5	36.0	36.0
User DelAdj:	1.00	1.00	1.00	1.00	1.00	1.00	1.00	1.00	1.00	1.00	1.00	1.00
AdjDel/Veh:	43.6	31.7	31.7	31.2	21.7	21.7	35.7	28.0	28.0	43.5	36.0	36.0
LOS by Move:	D	C	C	C	C	C	D	C	C	D	D	D
HCM2kAvgQ:	0	3	3	2	6	6	3	5	5	0	4	4

Note: Queue reported is the number of cars per lane.

Traffix 7.9.0215 (c) 2008 Dowling Assoc. Licensed to MMA, LONG BEACH, CA

Overlook Parkway Extension
Existing
PM Peak Hour

Level Of Service Computation Report
2000 HCM Operations Method (Future Volume Alternative)

Intersection #6 Washington St/Indiana Ave

Cycle (sec): 100 Critical Vol./Cap.(X): 0.456
Loss Time (sec): 12 (Y+R=4.0 sec) Average Delay (sec/veh): 23.7
Optimal Cycle: 50 Level Of Service: C

Street Name:	Washington St						Indiana Ave					
Approach:	North Bound			South Bound			East Bound			West Bound		
Movement:	L - T - R			L - T - R			L - T - R			L - T - R		
Control:	Permitted			Permitted			Protected			Protected		
Rights:	Ovl			Include			Include			Include		
Min. Green:	7	7	7	7	7	7	7	7	7	7	7	7
Lanes:	1 0	0 1	0	1 0	0 1	0	1 0	1 1	0	1 0	1 1	0
Volume Module:												
Base Vol:	176	1	145	13	5	14	3	459	168	176	483	2
Growth Adj:	1.00	1.00	1.00	1.00	1.00	1.00	1.00	1.00	1.00	1.00	1.00	1.00
Initial Bse:	176	1	145	13	5	14	3	459	168	176	483	2
Added Vol:	0	0	0	0	0	0	0	0	0	0	0	0
PasserByVol:	0	0	0	0	0	0	0	0	0	0	0	0
Initial Fut:	176	1	145	13	5	14	3	459	168	176	483	2
User Adj:	1.00	1.00	1.00	1.00	1.00	1.00	1.00	1.00	1.00	1.00	1.00	1.00
PHF Adj:	1.00	1.00	1.00	1.00	1.00	1.00	1.00	1.00	1.00	1.00	1.00	1.00
PHF Volume:	176	1	145	13	5	14	3	459	168	176	483	2
Reduct Vol:	0	0	0	0	0	0	0	0	0	0	0	0
Reduced Vol:	176	1	145	13	5	14	3	459	168	176	483	2
PCE Adj:	1.00	1.00	1.00	1.00	1.00	1.00	1.00	1.00	1.00	1.00	1.00	1.00
MLF Adj:	1.00	1.00	1.00	1.00	1.00	1.00	1.00	1.00	1.00	1.00	1.00	1.00
FinalVolume:	176	1	145	13	5	14	3	459	168	176	483	2
Saturation Flow Module:												
Sat/Lane:	1900	1900	1900	1900	1900	1900	1900	1900	1900	1900	1900	1900
Adjustment:	0.75	0.85	0.85	0.60	0.89	0.89	0.95	0.91	0.91	0.95	0.95	0.95
Lanes:	1.00	0.01	0.99	1.00	0.26	0.74	1.00	1.46	0.54	1.00	1.99	0.01
Final Sat.:	1431	11	1606	1138	445	1245	1805	2537	929	1805	3592	15
Capacity Analysis Module:												
Vol/Sat:	0.12	0.09	0.09	0.01	0.01	0.01	0.00	0.18	0.18	0.10	0.13	0.13
Crit Moves:	****							****		****		
Green/Cycle:	0.27	0.27	0.48	0.27	0.27	0.27	0.21	0.40	0.40	0.21	0.40	0.40
Volume/Cap:	0.46	0.33	0.19	0.04	0.04	0.04	0.01	0.46	0.46	0.46	0.34	0.34
Delay/Veh:	31.3	29.8	14.8	27.0	27.0	27.0	31.3	22.5	22.5	35.1	20.8	20.8
User DelAdj:	1.00	1.00	1.00	1.00	1.00	1.00	1.00	1.00	1.00	1.00	1.00	1.00
AdjDel/Veh:	31.3	29.8	14.8	27.0	27.0	27.0	31.3	22.5	22.5	35.1	20.8	20.8
LOS by Move:	C	C	B	C	C	C	C	C	C	D	C	C
HCM2kAvgQ:	5	4	3	0	0	0	0	8	8	5	5	5

Note: Queue reported is the number of cars per lane.

Traffix 7.9.0215 (c) 2008 Dowling Assoc. Licensed to MMA, LONG BEACH, CA

Overlook Parkway Extension
Existing
PM Peak Hour

Level Of Service Computation Report
2000 HCM 4-Way Stop Method (Future Volume Alternative)

Intersection #7 Washington St/Lincoln Ave

Cycle (sec): 100 Critical Vol./Cap.(X): 0.603
Loss Time (sec): 0 (Y+R=4.0 sec) Average Delay (sec/veh): 14.8
Optimal Cycle: 0 Level Of Service: B

Street Name:	Washington St						Lincoln Ave					
Approach:	North Bound			South Bound			East Bound			West Bound		
Movement:	L - T - R			L - T - R			L - T - R			L - T - R		
Control:	Stop Sign			Stop Sign			Stop Sign			Stop Sign		
Rights:	Include			Include			Include			Include		
Min. Green:	7	7	7	7	7	7	7	7	7	7	7	7
Lanes:	0 0	1! 0	0	0 0	1! 0	0	0 0	1! 0	0	0 1	0 0	1
Volume Module:												
Base Vol:	23	219	13	55	257	32	15	239	27	26	186	42
Growth Adj:	1.00	1.00	1.00	1.00	1.00	1.00	1.00	1.00	1.00	1.00	1.00	1.00
Initial Bse:	23	219	13	55	257	32	15	239	27	26	186	42
Added Vol:	0	0	0	0	0	0	0	0	0	0	0	0
PasserByVol:	0	0	0	0	0	0	0	0	0	0	0	0
Initial Fut:	23	219	13	55	257	32	15	239	27	26	186	42
User Adj:	1.00	1.00	1.00	1.00	1.00	1.00	1.00	1.00	1.00	1.00	1.00	1.00
PHF Adj:	1.00	1.00	1.00	1.00	1.00	1.00	1.00	1.00	1.00	1.00	1.00	1.00
PHF Volume:	23	219	13	55	257	32	15	239	27	26	186	42
Reduct Vol:	0	0	0	0	0	0	0	0	0	0	0	0
Reduced Vol:	23	219	13	55	257	32	15	239	27	26	186	42
PCE Adj:	1.00	1.00	1.00	1.00	1.00	1.00	1.00	1.00	1.00	1.00	1.00	1.00
MLF Adj:	1.00	1.00	1.00	1.00	1.00	1.00	1.00	1.00	1.00	1.00	1.00	1.00
FinalVolume:	23	219	13	55	257	32	15	239	27	26	186	42
Saturation Flow Module:												
Adjustment:	1.00	1.00	1.00	1.00	1.00	1.00	1.00	1.00	1.00	1.00	1.00	1.00
Lanes:	0.09	0.86	0.05	0.16	0.75	0.09	0.05	0.85	0.10	0.12	0.88	1.00
Final Sat.:	49	464	28	91	427	53	29	459	52	60	432	549
Capacity Analysis Module:												
Vol/Sat:	0.47	0.47	0.47	0.60	0.60	0.60	0.52	0.52	0.52	0.43	0.43	0.08
Crit Moves:		****				****		****			****	
Delay/Veh:	13.8	13.8	13.8	16.6	16.6	16.6	14.9	14.9	14.9	13.9	13.9	9.2
Delay Adj:	1.00	1.00	1.00	1.00	1.00	1.00	1.00	1.00	1.00	1.00	1.00	1.00
AdjDel/Veh:	13.8	13.8	13.8	16.6	16.6	16.6	14.9	14.9	14.9	13.9	13.9	9.2
LOS by Move:	B	B	B	C	C	C	B	B	B	B	B	A
ApproachDel:	13.8			16.6			14.9			13.1		
Delay Adj:	1.00			1.00			1.00			1.00		
ApprAdjDel:	13.8			16.6			14.9			13.1		
LOS by Appr:	B			C			B			B		
AllWayAvgQ:	0.7	0.7	0.7	1.2	1.2	1.2	0.9	0.9	0.9	0.6	0.6	0.1

Traffix 7.9.0215 (c) 2008 Dowling Assoc. Licensed to MMA, LONG BEACH, CA

Overlook Parkway Extension
Existing
PM Peak Hour

Note: Queue reported is the number of cars per lane.

Overlook Parkway Extension
Existing
PM Peak Hour

Level Of Service Computation Report
2000 HCM Operations Method (Future Volume Alternative)

Intersection #9 Washington St/Overlook Pkwy

Cycle (sec): 100 Critical Vol./Cap.(X): 0.213
Loss Time (sec): 12 (Y+R=4.0 sec) Average Delay (sec/veh): 11.6
Optimal Cycle: 50 Level Of Service: B

Street Name:	Washington St						Overlook Pkwy					
Approach:	North Bound			South Bound			East Bound			West Bound		
Movement:	L -	T -	R	L -	T -	R	L -	T -	R	L -	T -	R
Control:	Protected			Protected			Protected			Protected		
Rights:	Include			Include			Include			Ovl		
Min. Green:	7	7	7	7	7	7	7	7	7	7	7	7
Lanes:	0 0	1 1	0	1 0	2 0	0	0 0	0 0	0	1 0	0 0	1
Volume Module:												
Base Vol:	0	378	12	156	656	0	0	0	0	11	0	111
Growth Adj:	1.00	1.00	1.00	1.00	1.00	1.00	1.00	1.00	1.00	1.00	1.00	1.00
Initial Bse:	0	378	12	156	656	0	0	0	0	11	0	111
Added Vol:	0	0	0	0	0	0	0	0	0	0	0	0
PasserByVol:	0	0	0	0	0	0	0	0	0	0	0	0
Initial Fut:	0	378	12	156	656	0	0	0	0	11	0	111
User Adj:	1.00	1.00	1.00	1.00	1.00	1.00	1.00	1.00	1.00	1.00	1.00	1.00
PHF Adj:	1.00	1.00	1.00	1.00	1.00	1.00	1.00	1.00	1.00	1.00	1.00	1.00
PHF Volume:	0	378	12	156	656	0	0	0	0	11	0	111
Reduct Vol:	0	0	0	0	0	0	0	0	0	0	0	0
Reduced Vol:	0	378	12	156	656	0	0	0	0	11	0	111
PCE Adj:	1.00	1.00	1.00	1.00	1.00	1.00	1.00	1.00	1.00	1.00	1.00	1.00
MLF Adj:	1.00	1.00	1.00	1.00	1.00	1.00	1.00	1.00	1.00	1.00	1.00	1.00
FinalVolume:	0	378	12	156	656	0	0	0	0	11	0	111
Saturation Flow Module:												
Sat/Lane:	1900	1900	1900	1900	1900	1900	1900	1900	1900	1900	1900	1900
Adjustment:	1.00	0.95	0.95	0.95	0.95	1.00	1.00	1.00	1.00	0.95	1.00	0.85
Lanes:	0.00	1.94	0.06	1.00	2.00	0.00	0.00	0.00	0.00	1.00	0.00	1.00
Final Sat.:	0	3481	111	1805	3610	0	0	0	0	1805	0	1615
Capacity Analysis Module:												
Vol/Sat:	0.00	0.11	0.11	0.09	0.18	0.00	0.00	0.00	0.00	0.01	0.00	0.07
Crit Moves:	****				****					****		
Green/Cycle:	0.00	0.45	0.45	0.36	0.74	0.00	0.00	0.00	0.00	0.07	0.00	0.43
Volume/Cap:	0.00	0.24	0.24	0.24	0.25	0.00	0.00	0.00	0.00	0.09	0.00	0.16
Delay/Veh:	0.0	17.0	17.0	22.7	4.2	0.0	0.0	0.0	0.0	43.8	0.0	17.6
User DelAdj:	1.00	1.00	1.00	1.00	1.00	1.00	1.00	1.00	1.00	1.00	1.00	1.00
AdjDel/Veh:	0.0	17.0	17.0	22.7	4.2	0.0	0.0	0.0	0.0	43.8	0.0	17.6
LOS by Move:	A	B	B	C	A	A	A	A	A	D	A	B
HCM2kAvgQ:	0	4	4	3	3	0	0	0	0	0	0	2

Note: Queue reported is the number of cars per lane.

Overlook Parkway Extension
Existing
PM Peak Hour

Level Of Service Computation Report
2000 HCM Operations Method (Future Volume Alternative)

Intersection #10 Riverside Ave-SR-91 WB/Arlington Ave

Cycle (sec): 100 Critical Vol./Cap.(X): 0.750
Loss Time (sec): 12 (Y+R=4.0 sec) Average Delay (sec/veh): 30.8
Optimal Cycle: 67 Level Of Service: C

Street Name:	Riverside Ave-SR-91 WB						Arlington Ave					
Approach:	North Bound			South Bound			East Bound			West Bound		
Movement:	L - T - R			L - T - R			L - T - R			L - T - R		
Control:	Protected			Protected			Protected			Protected		
Rights:	Include			Ovl			Ignore			Ignore		
Min. Green:	7	7	7	7	7	7	7	7	7	7	7	7
Lanes:	0 0	0 0	0	1 1	0 0	1	1 0	3 0	1	1 0	2 0	1
Volume Module:												
Base Vol:	0	0	0	696	90	453	36	1035	194	423	783	179
Growth Adj:	1.00	1.00	1.00	1.00	1.00	1.00	1.00	1.00	1.00	1.00	1.00	1.00
Initial Bse:	0	0	0	696	90	453	36	1035	194	423	783	179
Added Vol:	0	0	0	0	0	0	0	0	0	0	0	0
PasserByVol:	0	0	0	0	0	0	0	0	0	0	0	0
Initial Fut:	0	0	0	696	90	453	36	1035	194	423	783	179
User Adj:	1.00	1.00	1.00	1.00	1.00	1.00	1.00	1.00	0.00	1.00	1.00	0.00
PHF Adj:	1.00	1.00	1.00	1.00	1.00	1.00	1.00	1.00	0.00	1.00	1.00	0.00
PHF Volume:	0	0	0	696	90	453	36	1035	0	423	783	0
Reduct Vol:	0	0	0	0	0	0	0	0	0	0	0	0
Reduced Vol:	0	0	0	696	90	453	36	1035	0	423	783	0
PCE Adj:	1.00	1.00	1.00	1.00	1.00	1.00	1.00	1.00	0.00	1.00	1.00	0.00
MLF Adj:	1.00	1.00	1.00	1.00	1.00	1.00	1.00	1.00	0.00	1.00	1.00	0.00
FinalVolume:	0	0	0	696	90	453	36	1035	0	423	783	0
Saturation Flow Module:												
Sat/Lane:	1900	1900	1900	1900	1900	1900	1900	1900	1900	1900	1900	1900
Adjustment:	1.00	1.00	1.00	0.92	0.92	0.85	0.95	0.91	1.00	0.95	0.95	1.00
Lanes:	0.00	0.00	0.00	1.77	0.23	1.00	1.00	3.00	1.00	1.00	2.00	1.00
Final Sat.:	0	0	0	3082	399	1615	1805	5187	1900	1805	3610	1900
Capacity Analysis Module:												
Vol/Sat:	0.00	0.00	0.00	0.23	0.23	0.28	0.02	0.20	0.00	0.23	0.22	0.00
Crit Moves:				****				****		****		
Green/Cycle:	0.00	0.00	0.00	0.30	0.29	0.43	0.14	0.27	0.00	0.31	0.44	0.00
Volume/Cap:	0.00	0.00	0.00	0.75	0.77	0.65	0.14	0.75	0.00	0.75	0.50	0.00
Delay/Veh:	0.0	0.0	0.0	34.6	36.0	24.4	37.9	36.0	0.0	36.4	20.4	0.0
User DelAdj:	1.00	1.00	1.00	1.00	1.00	1.00	1.00	1.00	1.00	1.00	1.00	1.00
AdjDel/Veh:	0.0	0.0	0.0	34.6	36.0	24.4	37.9	36.0	0.0	36.4	20.4	0.0
LOS by Move:	A	A	A	C	D	C	D	D	A	D	C	A
HCM2kAvgQ:	0	0	0	12	13	12	1	12	0	13	9	0

Note: Queue reported is the number of cars per lane.

Traffix 7.9.0215 (c) 2008 Dowling Assoc. Licensed to MMA, LONG BEACH, CA

Overlook Parkway Extension
Existing
PM Peak Hour

Level Of Service Computation Report
2000 HCM Operations Method (Future Volume Alternative)

Intersection #11 Indiana Ave-SR-91 EB/Arlington Ave

Cycle (sec): 100 Critical Vol./Cap.(X): 0.653
Loss Time (sec): 12 (Y+R=4.0 sec) Average Delay (sec/veh): 27.4
Optimal Cycle: 54 Level Of Service: C

Street Name:	Indiana Ave-SR-91 EB						Arlington Ave					
Approach:	North Bound			South Bound			East Bound			West Bound		
Movement:	L - T - R			L - T - R			L - T - R			L - T - R		
Control:	Protected			Protected			Protected			Protected		
Rights:	Ovl			Include			Ovl			Ignore		
Min. Green:	7	7	7	7	7	7	7	7	7	7	7	7
Lanes:	1 1	1 0	1	0 0	0 0	0	1 0	2 0	1	1 0	4 0	1
Volume Module:												
Base Vol:	195	288	465	0	0	0	320	1035	290	145	1238	202
Growth Adj:	1.00	1.00	1.00	1.00	1.00	1.00	1.00	1.00	1.00	1.00	1.00	1.00
Initial Bse:	195	288	465	0	0	0	320	1035	290	145	1238	202
Added Vol:	0	0	0	0	0	0	0	0	0	0	0	0
PasserByVol:	0	0	0	0	0	0	0	0	0	0	0	0
Initial Fut:	195	288	465	0	0	0	320	1035	290	145	1238	202
User Adj:	1.00	1.00	1.00	1.00	1.00	1.00	1.00	1.00	1.00	1.00	1.00	0.00
PHF Adj:	1.00	1.00	1.00	1.00	1.00	1.00	1.00	1.00	1.00	1.00	1.00	0.00
PHF Volume:	195	288	465	0	0	0	320	1035	290	145	1238	0
Reduct Vol:	0	0	0	0	0	0	0	0	0	0	0	0
Reduced Vol:	195	288	465	0	0	0	320	1035	290	145	1238	0
PCE Adj:	1.00	1.00	1.00	1.00	1.00	1.00	1.00	1.00	1.00	1.00	1.00	0.00
MLF Adj:	1.00	1.00	1.00	1.00	1.00	1.00	1.00	1.00	1.00	1.00	1.00	0.00
FinalVolume:	195	288	465	0	0	0	320	1035	290	145	1238	0
Saturation Flow Module:												
Sat/Lane:	1900	1900	1900	1900	1900	1900	1900	1900	1900	1900	1900	1900
Adjustment:	0.92	0.92	0.85	1.00	1.00	1.00	0.95	0.95	0.85	0.95	0.91	1.00
Lanes:	1.21	1.79	1.00	0.00	0.00	0.00	1.00	2.00	1.00	1.00	4.00	1.00
Final Sat.:	2118	3129	1615	0	0	0	1805	3610	1615	1805	6916	1900
Capacity Analysis Module:												
Vol/Sat:	0.09	0.09	0.29	0.00	0.00	0.00	0.18	0.29	0.18	0.08	0.18	0.00
Crit Moves:			****					****		****		
Green/Cycle:	0.22	0.32	0.44	0.00	0.00	0.00	0.28	0.44	0.66	0.12	0.28	0.00
Volume/Cap:	0.42	0.29	0.65	0.00	0.00	0.00	0.63	0.65	0.27	0.65	0.63	0.00
Delay/Veh:	33.7	25.7	24.1	0.0	0.0	0.0	34.2	23.0	7.2	48.6	32.1	0.0
User DelAdj:	1.00	1.00	1.00	1.00	1.00	1.00	1.00	1.00	1.00	1.00	1.00	1.00
AdjDel/Veh:	33.7	25.7	24.1	0.0	0.0	0.0	34.2	23.0	7.2	48.6	32.1	0.0
LOS by Move:	C	C	C	A	A	A	C	C	A	D	C	A
HCM2kAvgQ:	5	4	12	0	0	0	9	14	4	5	10	0

Note: Queue reported is the number of cars per lane.

Traffix 7.9.0215 (c) 2008 Dowling Assoc. Licensed to MMA, LONG BEACH, CA

Overlook Parkway Extension
Existing
PM Peak Hour

Level Of Service Computation Report
2000 HCM Operations Method (Future Volume Alternative)

Intersection #12 Victoria Ave/Arlington Ave

Cycle (sec): 100 Critical Vol./Cap.(X): 0.794
Loss Time (sec): 16 (Y+R=4.0 sec) Average Delay (sec/veh): 33.7
Optimal Cycle: 85 Level Of Service: C

Street Name:	Victoria Ave						Arlington Ave					
Approach:	North Bound			South Bound			East Bound			West Bound		
Movement:	L -	T -	R	L -	T -	R	L -	T -	R	L -	T -	R
Control:	Protected			Protected			Protected			Protected		
Rights:	Ovl			Include			Include			Include		
Min. Green:	7	7	7	7	7	7	7	7	7	7	7	7
Lanes:	1 0	1 0	1	1 0	1 0	1	1 0	1 1	0	1 0	1 1	0
Volume Module:												
Base Vol:	25	151	447	69	256	104	64	1227	27	307	1115	29
Growth Adj:	1.00	1.00	1.00	1.00	1.00	1.00	1.00	1.00	1.00	1.00	1.00	1.00
Initial Bse:	25	151	447	69	256	104	64	1227	27	307	1115	29
Added Vol:	0	0	0	0	0	0	0	0	0	0	0	0
PasserByVol:	0	0	0	0	0	0	0	0	0	0	0	0
Initial Fut:	25	151	447	69	256	104	64	1227	27	307	1115	29
User Adj:	1.00	1.00	1.00	1.00	1.00	1.00	1.00	1.00	1.00	1.00	1.00	1.00
PHF Adj:	1.00	1.00	1.00	1.00	1.00	1.00	1.00	1.00	1.00	1.00	1.00	1.00
PHF Volume:	25	151	447	69	256	104	64	1227	27	307	1115	29
Reduct Vol:	0	0	0	0	0	0	0	0	0	0	0	0
Reduced Vol:	25	151	447	69	256	104	64	1227	27	307	1115	29
PCE Adj:	1.00	1.00	1.00	1.00	1.00	1.00	1.00	1.00	1.00	1.00	1.00	1.00
MLF Adj:	1.00	1.00	1.00	1.00	1.00	1.00	1.00	1.00	1.00	1.00	1.00	1.00
FinalVolume:	25	151	447	69	256	104	64	1227	27	307	1115	29
Saturation Flow Module:												
Sat/Lane:	1900	1900	1900	1900	1900	1900	1900	1900	1900	1900	1900	1900
Adjustment:	0.95	1.00	0.85	0.95	1.00	0.85	0.95	0.95	0.95	0.95	0.95	0.95
Lanes:	1.00	1.00	1.00	1.00	1.00	1.00	1.00	1.96	0.04	1.00	1.95	0.05
Final Sat.:	1805	1900	1615	1805	1900	1615	1805	3522	77	1805	3504	91
Capacity Analysis Module:												
Vol/Sat:	0.01	0.08	0.28	0.04	0.13	0.06	0.04	0.35	0.35	0.17	0.32	0.32
Crit Moves:	****				****			****		****		
Green/Cycle:	0.07	0.14	0.34	0.09	0.16	0.16	0.11	0.41	0.41	0.20	0.50	0.50
Volume/Cap:	0.20	0.58	0.82	0.42	0.85	0.41	0.32	0.85	0.85	0.85	0.64	0.64
Delay/Veh:	44.6	43.5	39.6	44.7	60.5	38.9	42.0	31.5	31.5	55.4	19.0	19.0
User DelAdj:	1.00	1.00	1.00	1.00	1.00	1.00	1.00	1.00	1.00	1.00	1.00	1.00
AdjDel/Veh:	44.6	43.5	39.6	44.7	60.5	38.9	42.0	31.5	31.5	55.4	19.0	19.0
LOS by Move:	D	D	D	D	E	D	D	C	C	E	B	B
HCM2kAvgQ:	1	5	15	3	10	3	2	21	21	12	14	14

Note: Queue reported is the number of cars per lane.

Traffix 7.9.0215 (c) 2008 Dowling Assoc. Licensed to MMA, LONG BEACH, CA

Overlook Parkway Extension
Existing
PM Peak Hour

Level Of Service Computation Report
2000 HCM Operations Method (Future Volume Alternative)

Intersection #13 Alessandro Blvd/Arlington Ave

Cycle (sec): 100 Critical Vol./Cap.(X): 0.910
Loss Time (sec): 16 (Y+R=4.0 sec) Average Delay (sec/veh): 41.6
Optimal Cycle: 120 Level Of Service: D

Street Name:	Alessandro Blvd						Arlington Ave					
Approach:	North Bound			South Bound			East Bound			West Bound		
Movement:	L -	T -	R	L -	T -	R	L -	T -	R	L -	T -	R
Control:	Protected			Protected			Protected			Protected		
Rights:	Ovl			Include			Ovl			Ovl		
Min. Green:	7	7	7	7	7	7	7	7	7	7	7	7
Lanes:	2 0	2 0	1	2 0	2 1	0	1 0	2 0	2	2 0	2 0	1
Volume Module:												
Base Vol:	721	642	107	381	1369	20	42	542	1054	438	666	255
Growth Adj:	1.00	1.00	1.00	1.00	1.00	1.00	1.00	1.00	1.00	1.00	1.00	1.00
Initial Bse:	721	642	107	381	1369	20	42	542	1054	438	666	255
Added Vol:	0	0	0	0	0	0	0	0	0	0	0	0
PasserByVol:	0	0	0	0	0	0	0	0	0	0	0	0
Initial Fut:	721	642	107	381	1369	20	42	542	1054	438	666	255
User Adj:	1.00	1.00	1.00	1.00	1.00	1.00	1.00	1.00	1.00	1.00	1.00	1.00
PHF Adj:	1.00	1.00	1.00	1.00	1.00	1.00	1.00	1.00	1.00	1.00	1.00	1.00
PHF Volume:	721	642	107	381	1369	20	42	542	1054	438	666	255
Reduct Vol:	0	0	0	0	0	0	0	0	0	0	0	0
Reduced Vol:	721	642	107	381	1369	20	42	542	1054	438	666	255
PCE Adj:	1.00	1.00	1.00	1.00	1.00	1.00	1.00	1.00	1.00	1.00	1.00	1.00
MLF Adj:	1.00	1.00	1.00	1.00	1.00	1.00	1.00	1.00	1.00	1.00	1.00	1.00
FinalVolume:	721	642	107	381	1369	20	42	542	1054	438	666	255
Saturation Flow Module:												
Sat/Lane:	1900	1900	1900	1900	1900	1900	1900	1900	1900	1900	1900	1900
Adjustment:	0.92	0.95	0.85	0.92	0.91	0.91	0.95	0.95	0.75	0.92	0.95	0.85
Lanes:	2.00	2.00	1.00	2.00	2.96	0.04	1.00	2.00	2.00	2.00	2.00	1.00
Final Sat.:	3502	3610	1615	3502	5102	75	1805	3610	2842	3502	3610	1615
Capacity Analysis Module:												
Vol/Sat:	0.21	0.18	0.07	0.11	0.27	0.27	0.02	0.15	0.37	0.13	0.18	0.16
Crit Moves:	****				****				****	****		
Green/Cycle:	0.23	0.32	0.46	0.20	0.29	0.29	0.09	0.18	0.41	0.14	0.23	0.43
Volume/Cap:	0.91	0.55	0.14	0.55	0.91	0.91	0.27	0.83	0.91	0.91	0.80	0.37
Delay/Veh:	52.1	28.4	15.7	37.0	42.4	42.4	43.5	48.1	38.5	63.7	41.7	19.7
User DelAdj:	1.00	1.00	1.00	1.00	1.00	1.00	1.00	1.00	1.00	1.00	1.00	1.00
AdjDel/Veh:	52.1	28.4	15.7	37.0	42.4	42.4	43.5	48.1	38.5	63.7	41.7	19.7
LOS by Move:	D	C	B	D	D	D	D	D	D	E	D	B
HCM2kAvgQ:	15	9	2	6	19	19	1	11	21	10	12	5

Note: Queue reported is the number of cars per lane.

Traffix 7.9.0215 (c) 2008 Dowling Assoc. Licensed to MMA, LONG BEACH, CA

Overlook Parkway Extension
Existing
PM Peak Hour

Level Of Service Computation Report
2000 HCM Operations Method (Future Volume Alternative)

Intersection #14 Alessandro Blvd/Overlook Pkwy

Cycle (sec):	100	Critical Vol./Cap.(X):	0.794
Loss Time (sec):	16 (Y+R=4.0 sec)	Average Delay (sec/veh):	27.9
Optimal Cycle:	85	Level Of Service:	C

Street Name:	Alessandro Blvd						Overlook Pkwy					
Approach:	North Bound			South Bound			East Bound			West Bound		
Movement:	L -	T -	R	L -	T -	R	L -	T -	R	L -	T -	R
Control:	Protected			Protected			Protected			Protected		
Rights:	Include			Include			Include			Include		
Min. Green:	7	7	7	7	7	7	7	7	7	7	7	7
Lanes:	1 0	3 0	1	1 0	2 1	0	1 0	1 1	0	3 0	0 1	0
Volume Module:												
Base Vol:	4	1351	366	72	2781	16	6	7	13	613	16	41
Growth Adj:	1.00	1.00	1.00	1.00	1.00	1.00	1.00	1.00	1.00	1.00	1.00	1.00
Initial Bse:	4	1351	366	72	2781	16	6	7	13	613	16	41
Added Vol:	0	0	0	0	0	0	0	0	0	0	0	0
PasserByVol:	0	0	0	0	0	0	0	0	0	0	0	0
Initial Fut:	4	1351	366	72	2781	16	6	7	13	613	16	41
User Adj:	1.00	1.00	1.00	1.00	1.00	1.00	1.00	1.00	1.00	1.00	1.00	1.00
PHF Adj:	1.00	1.00	1.00	1.00	1.00	1.00	1.00	1.00	1.00	1.00	1.00	1.00
PHF Volume:	4	1351	366	72	2781	16	6	7	13	613	16	41
Reduct Vol:	0	0	0	0	0	0	0	0	0	0	0	0
Reduced Vol:	4	1351	366	72	2781	16	6	7	13	613	16	41
PCE Adj:	1.00	1.00	1.00	1.00	1.00	1.00	1.00	1.00	1.00	1.00	1.00	1.00
MLF Adj:	1.00	1.00	1.00	1.00	1.00	1.00	1.00	1.00	1.00	1.00	1.00	1.00
FinalVolume:	4	1351	366	72	2781	16	6	7	13	613	16	41
Saturation Flow Module:												
Sat/Lane:	1900	1900	1900	1900	1900	1900	1900	1900	1900	1900	1900	1900
Adjustment:	0.95	0.91	0.85	0.95	0.91	0.91	0.95	0.86	0.86	0.92	0.89	0.89
Lanes:	1.00	3.00	1.00	1.00	2.98	0.02	1.00	1.00	1.00	3.00	0.28	0.72
Final Sat.:	1805	5187	1615	1805	5152	30	1805	1630	1630	5253	476	1219
Capacity Analysis Module:												
Vol/Sat:	0.00	0.26	0.23	0.04	0.54	0.54	0.00	0.00	0.01	0.12	0.03	0.03
Crit Moves:	****				****				****	****		
Green/Cycle:	0.07	0.51	0.51	0.14	0.58	0.58	0.10	0.07	0.07	0.12	0.10	0.10
Volume/Cap:	0.03	0.51	0.45	0.29	0.94	0.94	0.03	0.06	0.11	0.94	0.35	0.35
Delay/Veh:	43.4	16.5	16.0	39.5	26.2	26.2	41.0	43.5	43.9	64.7	43.4	43.4
User DelAdj:	1.00	1.00	1.00	1.00	1.00	1.00	1.00	1.00	1.00	1.00	1.00	1.00
AdjDel/Veh:	43.4	16.5	16.0	39.5	26.2	26.2	41.0	43.5	43.9	64.7	43.4	43.4
LOS by Move:	D	B	B	D	C	C	D	D	D	E	D	D
HCM2kAvgQ:	0	10	7	2	34	34	0	0	0	10	2	2

Note: Queue reported is the number of cars per lane.

Traffix 7.9.0215 (c) 2008 Dowling Assoc. Licensed to MMA, LONG BEACH, CA

Overlook Parkway Extension
Existing
PM Peak Hour

Level Of Service Computation Report
2000 HCM Operations Method (Future Volume Alternative)

Intersection #15 Alessandro Blvd/Trautwein Rd

Cycle (sec):	100	Critical Vol./Cap.(X):	0.637
Loss Time (sec):	12 (Y+R=4.0 sec)	Average Delay (sec/veh):	20.8
Optimal Cycle:	52	Level Of Service:	C

Street Name:	Alessandro Blvd						Trautwein Rd					
Approach:	North Bound			South Bound			East Bound			West Bound		
Movement:	L -	T -	R	L -	T -	R	L -	T -	R	L -	T -	R
Control:	Protected			Protected			Protected			Protected		
Rights:	Include			Ignore			Ignore			Include		
Min. Green:	7	7	7	7	7	7	7	7	7	7	7	7
Lanes:	2 0	3 0	0	0 0	3 0	1	3 0	0 0	1	0 0	0 0	0
Volume Module:												
Base Vol:	213	1095	0	0	1899	1291	701	0	148	0	0	0
Growth Adj:	1.00	1.00	1.00	1.00	1.00	1.00	1.00	1.00	1.00	1.00	1.00	1.00
Initial Bse:	213	1095	0	0	1899	1291	701	0	148	0	0	0
Added Vol:	0	0	0	0	0	0	0	0	0	0	0	0
PasserByVol:	0	0	0	0	0	0	0	0	0	0	0	0
Initial Fut:	213	1095	0	0	1899	1291	701	0	148	0	0	0
User Adj:	1.00	1.00	1.00	1.00	1.00	0.00	1.00	1.00	0.00	1.00	1.00	1.00
PHF Adj:	1.00	1.00	1.00	1.00	1.00	0.00	1.00	1.00	0.00	1.00	1.00	1.00
PHF Volume:	213	1095	0	0	1899	0	701	0	0	0	0	0
Reduct Vol:	0	0	0	0	0	0	0	0	0	0	0	0
Reduced Vol:	213	1095	0	0	1899	0	701	0	0	0	0	0
PCE Adj:	1.00	1.00	1.00	1.00	1.00	0.00	1.00	1.00	0.00	1.00	1.00	1.00
MLF Adj:	1.00	1.00	1.00	1.00	1.00	0.00	1.00	1.00	0.00	1.00	1.00	1.00
FinalVolume:	213	1095	0	0	1899	0	701	0	0	0	0	0
Saturation Flow Module:												
Sat/Lane:	1900	1900	1900	1900	1900	1900	1900	1900	1900	1900	1900	1900
Adjustment:	0.92	0.91	1.00	1.00	0.91	1.00	0.92	1.00	1.00	1.00	1.00	1.00
Lanes:	2.00	3.00	0.00	0.00	3.00	1.00	3.00	0.00	1.00	0.00	0.00	0.00
Final Sat.:	3502	5187	0	0	5187	1900	5253	0	1900	0	0	0
Capacity Analysis Module:												
Vol/Sat:	0.06	0.21	0.00	0.00	0.37	0.00	0.13	0.00	0.00	0.00	0.00	0.00
Crit Moves:	****				****		****					
Green/Cycle:	0.10	0.50	0.00	0.00	0.57	0.00	0.21	0.00	0.00	0.00	0.00	0.00
Volume/Cap:	0.64	0.42	0.00	0.00	0.64	0.00	0.64	0.00	0.00	0.00	0.00	0.00
Delay/Veh:	47.6	15.7	0.0	0.0	14.7	0.0	37.3	0.0	0.0	0.0	0.0	0.0
User DelAdj:	1.00	1.00	1.00	1.00	1.00	1.00	1.00	1.00	1.00	1.00	1.00	1.00
AdjDel/Veh:	47.6	15.7	0.0	0.0	14.7	0.0	37.3	0.0	0.0	0.0	0.0	0.0
LOS by Move:	D	B	A	A	B	A	D	A	A	A	A	A
HCM2kAvgQ:	4	8	0	0	15	0	8	0	0	0	0	0

Note: Queue reported is the number of cars per lane.

Traffix 7.9.0215 (c) 2008 Dowling Assoc. Licensed to MMA, LONG BEACH, CA

Overlook Parkway Extension
Existing
PM Peak Hour

Level Of Service Computation Report
2000 HCM 4-Way Stop Method (Future Volume Alternative)

Intersection #16 Crystal View Ter/Overlook Pkwy

Cycle (sec):	100	Critical Vol./Cap.(X):	0.101
Loss Time (sec):	0 (Y+R=4.0 sec)	Average Delay (sec/veh):	7.4
Optimal Cycle:	0	Level Of Service:	A

Street Name:	Crystal View Ter							Overlook Pkwy					
Approach:	North Bound			South Bound			East Bound			West Bound			
Movement:	L	T	R	L	T	R	L	T	R	L	T	R	
Control:	Stop Sign			Stop Sign			Stop Sign			Stop Sign			
Rights:	Include			Include			Include			Include			
Min. Green:	7	7	7	7	7	7	7	7	7	7	7	7	
Lanes:	1 0 0 0 0			0 0 1 0 0			1 0 0 1 0			1 0 0 1 0			
Volume Module:													
Base Vol:	83	0	0	0	2	0	1	0	87	0	0	0	
Growth Adj:	1.00	1.00	1.00	1.00	1.00	1.00	1.00	1.00	1.00	1.00	1.00	1.00	
Initial Bse:	83	0	0	0	2	0	1	0	87	0	0	0	
Added Vol:	0	0	0	0	0	0	0	0	0	0	0	0	
PasserByVol:	0	0	0	0	0	0	0	0	0	0	0	0	
Initial Fut:	83	0	0	0	2	0	1	0	87	0	0	0	
User Adj:	1.00	1.00	1.00	1.00	1.00	1.00	1.00	1.00	1.00	1.00	1.00	1.00	
PHF Adj:	1.00	1.00	1.00	1.00	1.00	1.00	1.00	1.00	1.00	1.00	1.00	1.00	
PHF Volume:	83	0	0	0	2	0	1	0	87	0	0	0	
Reduct Vol:	0	0	0	0	0	0	0	0	0	0	0	0	
Reduced Vol:	83	0	0	0	2	0	1	0	87	0	0	0	
PCE Adj:	1.00	1.00	1.00	1.00	1.00	1.00	1.00	1.00	1.00	1.00	1.00	1.00	
MLF Adj:	1.00	1.00	1.00	1.00	1.00	1.00	1.00	1.00	1.00	1.00	1.00	1.00	
FinalVolume:	83	0	0	0	2	0	1	0	87	0	0	0	
Saturation Flow Module:													
Adjustment:	1.00	1.00	1.00	1.00	1.00	1.00	1.00	1.00	1.00	1.00	1.00	1.00	
Lanes:	1.00	0.00	0.00	0.00	1.00	0.00	1.00	0.00	1.00	1.00	1.00	0.00	
Final Sat.:	826	0	0	0	845	0	685	0	887	675	745	0	
Capacity Analysis Module:													
Vol/Sat:	0.10	xxxx	xxxx	xxxx	0.00	xxxx	0.00	xxxx	0.10	0.00	0.00	xxxx	
Crit Moves:	****				****				****		****		
Delay/Veh:	7.8	0.0	0.0	0.0	7.2	0.0	7.9	0.0	7.1	0.0	0.0	0.0	
Delay Adj:	1.00	1.00	1.00	1.00	1.00	1.00	1.00	1.00	1.00	1.00	1.00	1.00	
AdjDel/Veh:	7.8	0.0	0.0	0.0	7.2	0.0	7.9	0.0	7.1	0.0	0.0	0.0	
LOS by Move:	A	*	*	*	A	*	A	*	A	*	*	*	
ApproachDel:	7.8				7.2		7.1			xxxxxx			
Delay Adj:	1.00				1.00		1.00			xxxxx			
ApprAdjDel:	7.8				7.2		7.1			xxxxxx			
LOS by Appr:	A				A		A			*			
AllWayAvgQ:	0.1	0.1	0.1	0.0	0.0	0.0	0.0	0.1	0.1	0.0	0.0	0.0	

Traffix 7.9.0215 (c) 2008 Dowling Assoc. Licensed to MMA, LONG BEACH, CA

Overlook Parkway Extension
Existing
PM Peak Hour

Note: Queue reported is the number of cars per lane.

Traffix 7.9.0215 (c) 2008 Dowling Assoc. Licensed to MMA, LONG BEACH, CA

Overlook Parkway Extension
Existing
PM Peak Hour

Level Of Service Computation Report
2000 HCM Unsignalized Method (Future Volume Alternative)

Intersection #17 Kingdom Dr/Overlook Pkwy

Average Delay (sec/veh): 1.4 Worst Case Level Of Service: A[9.7]

Street Name:	Kingdom Dr									Overlook Pkwy								
Approach:	North Bound				South Bound				East Bound				West Bound					
Movement:	L	-	T	-	R	L	-	T	-	R	L	-	T	-	R	L	-	T	-	R
Control:	Stop Sign					Stop Sign					Uncontrolled					Uncontrolled				
Rights:	Include					Include					Include					Include				
Lanes:	0	0	1!	0	0	1	0	0	0	0	1	0	0	1	0	1	0	0	1	0
Volume Module:																				
Base Vol:	11	0	7		2	0		0		0	76		24		14	71		2
Growth Adj:	1.00	1.00	1.00		1.00	1.00		1.00		1.00	1.00		1.00		1.00	1.00		1.00
Initial Bse:	11	0	7		2	0		0		0	76		24		14	71		2
Added Vol:	0	0	0		0	0		0		0	0		0		0	0		0
PasserByVol:	0	0	0		0	0		0		0	0		0		0	0		0
Initial Fut:	11	0	7		2	0		0		0	76		24		14	71		2
User Adj:	1.00	1.00	1.00		1.00	1.00		1.00		1.00	1.00		1.00		1.00	1.00		1.00
PHF Adj:	1.00	1.00	1.00		1.00	1.00		1.00		1.00	1.00		1.00		1.00	1.00		1.00
PHF Volume:	11	0	7		2	0		0		0	76		24		14	71		2
Reduct Vol:	0	0	0		0	0		0		0	0		0		0	0		0
FinalVolume:	11	0	7		2	0		0		0	76		24		14	71		2
Critical Gap Module:																				
Critical Gp:	7.1	6.5		6.2	7.1	xxxx	xxxxx	xxxxx	xxxx	xxxxx		4.1	xxxx	xxxxx						
FollowUpTim:	3.5	4.0		3.3	3.5	xxxx	xxxxx	xxxxx	xxxx	xxxxx		2.2	xxxx	xxxxx						
Capacity Module:																				
Cnflict Vol:	188	189		88	192	xxxx	xxxxx	xxxx	xxxx	xxxxx		100	xxxx	xxxxx						
Potent Cap.:	777	709		976	773	xxxx	xxxxx	xxxx	xxxx	xxxxx		1505	xxxx	xxxxx						
Move Cap.:	771	703		976	762	xxxx	xxxxx	xxxx	xxxx	xxxxx		1505	xxxx	xxxxx						
Volume/Cap:	0.01	0.00		0.01	0.00	xxxx	xxxx	xxxx	xxxx	xxxx		0.01	xxxx	xxxx						
Level Of Service Module:																				
2Way95thQ:	xxxx	xxxx	xxxxx		0.0	xxxx	xxxxx	xxxx	xxxx	xxxxx		0.0	xxxx	xxxxx						
Control Del:	xxxxx	xxxx	xxxxx		9.7	xxxx	xxxxx	xxxxx	xxxx	xxxxx		7.4	xxxx	xxxxx						
LOS by Move:	*	*	*		A	*	*	*	*	*		A	*	*						
Movement:	LT -	LTR -	RT		LT -	LTR -	RT	LT -	LTR -	RT		LT -	LTR -	RT						
Shared Cap.:	xxxx	840	xxxxx		xxxx	xxxx	xxxxx	xxxx	xxxx	xxxxx		xxxx	xxxx	xxxxx						
SharedQueue:	xxxxx	0.1	xxxxx		xxxxx	xxxx	xxxxx	xxxxx	xxxx	xxxxx		xxxxx	xxxx	xxxxx						
Shrd ConDel:	xxxxx	9.4	xxxxx		xxxxx	xxxx	xxxxx	xxxxx	xxxx	xxxxx		xxxxx	xxxx	xxxxx						
Shared LOS:	*	A	*		*	*	*	*	*	*		*	*	*						
ApproachDel:	9.4				9.7			xxxxxx				xxxxxx						
ApproachLOS:	A				A			*				*						

Note: Queue reported is the number of cars per lane.

Overlook Parkway Extension
Existing
PM Peak Hour

Level Of Service Computation Report
2000 HCM Unsignalized Method (Future Volume Alternative)

Intersection #18 Kingdom Dr/Green Orchard Pl

Average Delay (sec/veh): 2.4 Worst Case Level Of Service: A[8.5]

Street Name:	Kingdom Dr									Green Orchard Pl								
Approach:	North Bound				South Bound				East Bound				West Bound					
Movement:	L	-	T	-	R	L	-	T	-	R	L	-	T	-	R	L	-	T	-	R
Control:	Uncontrolled					Uncontrolled					Stop Sign					Stop Sign				
Rights:	Include					Include					Include					Include				
Lanes:	0	0	0	1	0	0	1	0	0	0	0	0	0	0	0	0	0	1!	0	0
Volume Module:																				
Base Vol:	0	14		6	12	29		0		0	0		0		2	0		8
Growth Adj:	1.00	1.00		1.00	1.00	1.00		1.00		1.00	1.00		1.00		1.00	1.00		1.00
Initial Bse:	0	14		6	12	29		0		0	0		0		2	0		8
Added Vol:	0	0		0	0	0		0		0	0		0		0	0		0
PasserByVol:	0	0		0	0	0		0		0	0		0		0	0		0
Initial Fut:	0	14		6	12	29		0		0	0		0		2	0		8
User Adj:	1.00	1.00		1.00	1.00	1.00		1.00		1.00	1.00		1.00		1.00	1.00		1.00
PHF Adj:	1.00	1.00		1.00	1.00	1.00		1.00		1.00	1.00		1.00		1.00	1.00		1.00
PHF Volume:	0	14		6	12	29		0		0	0		0		2	0		8
Reduct Vol:	0	0		0	0	0		0		0	0		0		0	0		0
FinalVolume:	0	14		6	12	29		0		0	0		0		2	0		8
Critical Gap Module:																				
Critical Gp:	xxxxx	xxxx	xxxxx		4.1	xxxx	xxxxx	xxxxx	xxxx	xxxxx		6.4	6.5		6.2					
FollowUpTim:	xxxxx	xxxx	xxxxx		2.2	xxxx	xxxxx	xxxxx	xxxx	xxxxx		3.5	4.0		3.3					
Capacity Module:																				
Cnflict Vol:	xxxx	xxxx	xxxxx		20	xxxx	xxxxx	xxxx	xxxx	xxxxx		70	70		17					
Potent Cap.:	xxxx	xxxx	xxxxx		1609	xxxx	xxxxx	xxxx	xxxx	xxxxx		939	824		1068					
Move Cap.:	xxxx	xxxx	xxxxx		1609	xxxx	xxxxx	xxxx	xxxx	xxxxx		934	818		1068					
Volume/Cap:	xxxx	xxxx	xxxx		0.01	xxxx	xxxx	xxxx	xxxx	xxxx		0.00	0.00		0.01					
Level Of Service Module:																				
2Way95thQ:	xxxx	xxxx	xxxxx		0.0	xxxx	xxxxx	xxxx	xxxx	xxxxx		xxxx	xxxx	xxxxx						
Control Del:	xxxxx	xxxx	xxxxx		7.3	xxxx	xxxxx	xxxxx	xxxx	xxxxx		xxxxx	xxxx	xxxxx						
LOS by Move:	*	*	*		A	*	*	*	*	*		*	*	*						
Movement:	LT -	LTR -	RT		LT -	LTR -	RT	LT -	LTR -	RT		LT -	LTR -	RT						
Shared Cap.:	xxxx	xxxx	xxxxx		xxxx	xxxx	xxxxx	xxxx	xxxx	xxxxx		xxxx	1038	xxxxx						
SharedQueue:	xxxxx	xxxx	xxxxx		0.0	xxxx	xxxxx	xxxxx	xxxx	xxxxx		xxxxx	0.0	xxxxx						
Shrd ConDel:	xxxxx	xxxx	xxxxx		7.3	xxxx	xxxxx	xxxxx	xxxx	xxxxx		xxxxx	8.5	xxxxx						
Shared LOS:	*	*	*		A	*	*	*	*	*		*	A	*						
ApproachDel:	xxxxxx				xxxxxx			xxxxxx				8.5								
ApproachLOS:	*				*			*				A								

Note: Queue reported is the number of cars per lane.

Overlook Parkway Extension
Existing
PM Peak Hour

Level Of Service Computation Report
2000 HCM Operations Method (Future Volume Alternative)

Intersection #19 Trautwein Rd/John F. Kennedy Dr

Cycle (sec):	100	Critical Vol./Cap.(X):	0.632
Loss Time (sec):	16 (Y+R=4.0 sec)	Average Delay (sec/veh):	19.3
Optimal Cycle:	61	Level Of Service:	B

Street Name:	Trautwein Rd						John F. Kennedy Dr					
Approach:	North Bound			South Bound			East Bound			West Bound		
Movement:	L -	T -	R	L -	T -	R	L -	T -	R	L -	T -	R
Control:	Protected			Protected			Protected			Protected		
Rights:	Include			Ovl			Include			Include		
Min. Green:	7	7	7	7	7	7	7	7	7	7	7	7
Lanes:	1 0	2 0	1	1 0	2 0	1	2 0	1 0	1	1 0	0 1	0
Volume Module:												
Base Vol:	45	845	37	35	1434	473	290	24	67	30	27	19
Growth Adj:	1.00	1.00	1.00	1.00	1.00	1.00	1.00	1.00	1.00	1.00	1.00	1.00
Initial Bse:	45	845	37	35	1434	473	290	24	67	30	27	19
Added Vol:	0	0	0	0	0	0	0	0	0	0	0	0
PasserByVol:	0	0	0	0	0	0	0	0	0	0	0	0
Initial Fut:	45	845	37	35	1434	473	290	24	67	30	27	19
User Adj:	1.00	1.00	1.00	1.00	1.00	1.00	1.00	1.00	1.00	1.00	1.00	1.00
PHF Adj:	1.00	1.00	1.00	1.00	1.00	1.00	1.00	1.00	1.00	1.00	1.00	1.00
PHF Volume:	45	845	37	35	1434	473	290	24	67	30	27	19
Reduct Vol:	0	0	0	0	0	0	0	0	0	0	0	0
Reduced Vol:	45	845	37	35	1434	473	290	24	67	30	27	19
PCE Adj:	1.00	1.00	1.00	1.00	1.00	1.00	1.00	1.00	1.00	1.00	1.00	1.00
MLF Adj:	1.00	1.00	1.00	1.00	1.00	1.00	1.00	1.00	1.00	1.00	1.00	1.00
FinalVolume:	45	845	37	35	1434	473	290	24	67	30	27	19
Saturation Flow Module:												
Sat/Lane:	1900	1900	1900	1900	1900	1900	1900	1900	1900	1900	1900	1900
Adjustment:	0.95	0.95	0.85	0.95	0.95	0.85	0.92	1.00	0.85	0.95	0.94	0.94
Lanes:	1.00	2.00	1.00	1.00	2.00	1.00	2.00	1.00	1.00	1.00	0.59	0.41
Final Sat.:	1805	3610	1615	1805	3610	1615	3502	1900	1615	1805	1046	736
Capacity Analysis Module:												
Vol/Sat:	0.02	0.23	0.02	0.02	0.40	0.29	0.08	0.01	0.04	0.02	0.03	0.03
Crit Moves:	****				****		****				****	
Green/Cycle:	0.07	0.50	0.50	0.15	0.58	0.70	0.12	0.10	0.10	0.10	0.07	0.07
Volume/Cap:	0.36	0.47	0.05	0.13	0.69	0.42	0.69	0.13	0.43	0.17	0.37	0.37
Delay/Veh:	46.1	16.5	12.8	37.1	15.7	6.6	46.8	41.8	44.7	42.1	46.2	46.2
User DelAdj:	1.00	1.00	1.00	1.00	1.00	1.00	1.00	1.00	1.00	1.00	1.00	1.00
AdjDel/Veh:	46.1	16.5	12.8	37.1	15.7	6.6	46.8	41.8	44.7	42.1	46.2	46.2
LOS by Move:	D	B	B	D	B	A	D	D	D	D	D	D
HCM2kAvgQ:	2	9	1	1	17	6	6	1	2	1	2	2

Note: Queue reported is the number of cars per lane.

Traffix 7.9.0215 (c) 2008 Dowling Assoc. Licensed to MMA, LONG BEACH, CA

Overlook Parkway Extension
Existing
PM Peak Hour

Level Of Service Computation Report
2000 HCM Operations Method (Future Volume Alternative)

Intersection #20 Washington St/Bradley St

Cycle (sec):	100	Critical Vol./Cap.(X):	0.612
Loss Time (sec):	12 (Y+R=4.0 sec)	Average Delay (sec/veh):	24.4
Optimal Cycle:	50	Level Of Service:	C

Street Name:	Washington St						Bradley St					
Approach:	North Bound			South Bound			East Bound			West Bound		
Movement:	L -	T -	R	L -	T -	R	L -	T -	R	L -	T -	R
Control:	Protected			Protected			Permitted			Permitted		
Rights:	Include			Include			Include			Include		
Min. Green:	7	7	7	7	7	7	7	7	7	7	7	7
Lanes:	1 0	1 0	1	1 0	0 1	0	0 0	1! 0	0	0 0	1! 0	0
Volume Module:												
Base Vol:	80	356	16	76	618	1	4	32	246	15	20	36
Growth Adj:	1.00	1.00	1.00	1.00	1.00	1.00	1.00	1.00	1.00	1.00	1.00	1.00
Initial Bse:	80	356	16	76	618	1	4	32	246	15	20	36
Added Vol:	0	0	0	0	0	0	0	0	0	0	0	0
PasserByVol:	0	0	0	0	0	0	0	0	0	0	0	0
Initial Fut:	80	356	16	76	618	1	4	32	246	15	20	36
User Adj:	1.00	1.00	1.00	1.00	1.00	1.00	1.00	1.00	1.00	1.00	1.00	1.00
PHF Adj:	1.00	1.00	1.00	1.00	1.00	1.00	1.00	1.00	1.00	1.00	1.00	1.00
PHF Volume:	80	356	16	76	618	1	4	32	246	15	20	36
Reduct Vol:	0	0	0	0	0	0	0	0	0	0	0	0
Reduced Vol:	80	356	16	76	618	1	4	32	246	15	20	36
PCE Adj:	1.00	1.00	1.00	1.00	1.00	1.00	1.00	1.00	1.00	1.00	1.00	1.00
MLF Adj:	1.00	1.00	1.00	1.00	1.00	1.00	1.00	1.00	1.00	1.00	1.00	1.00
FinalVolume:	80	356	16	76	618	1	4	32	246	15	20	36
Saturation Flow Module:												
Sat/Lane:	1900	1900	1900	1900	1900	1900	1900	1900	1900	1900	1900	1900
Adjustment:	0.95	1.00	0.85	0.95	1.00	1.00	0.88	0.88	0.88	0.86	0.86	0.86
Lanes:	1.00	1.00	1.00	1.00	0.99	0.01	0.01	0.11	0.88	0.21	0.28	0.51
Final Sat.:	1805	1900	1615	1805	1897	3	24	190	1459	343	458	824
Capacity Analysis Module:												
Vol/Sat:	0.04	0.19	0.01	0.04	0.33	0.33	0.17	0.17	0.17	0.04	0.04	0.04
Crit Moves:	****				****			****				
Green/Cycle:	0.07	0.44	0.44	0.16	0.53	0.53	0.28	0.28	0.28	0.28	0.28	0.28
Volume/Cap:	0.61	0.43	0.02	0.26	0.61	0.61	0.61	0.61	0.61	0.16	0.16	0.16
Delay/Veh:	53.3	19.6	15.8	36.9	17.3	17.3	34.0	34.0	34.0	27.6	27.6	27.6
User DelAdj:	1.00	1.00	1.00	1.00	1.00	1.00	1.00	1.00	1.00	1.00	1.00	1.00
AdjDel/Veh:	53.3	19.6	15.8	36.9	17.3	17.3	34.0	34.0	34.0	27.6	27.6	27.6
LOS by Move:	D	B	B	D	B	B	C	C	C	C	C	C
HCM2kAvgQ:	3	8	0	2	13	13	8	8	8	2	2	2

Note: Queue reported is the number of cars per lane.

Traffix 7.9.0215 (c) 2008 Dowling Assoc. Licensed to MMA, LONG BEACH, CA

Overlook Parkway Extension
Existing
PM Peak Hour

Level Of Service Computation Report
2000 HCM Operations Method (Future Volume Alternative)

Intersection #21 Alessandro Blvd/Via Vista Dr

Cycle (sec):	100	Critical Vol./Cap.(X):	0.810
Loss Time (sec):	16 (Y+R=4.0 sec)	Average Delay (sec/veh):	21.1
Optimal Cycle:	89	Level Of Service:	C

Street Name:	Alessandro Blvd								Via Vista Dr								
Approach:	North Bound				South Bound				East Bound				West Bound				
Movement:	L	-	T	-	R	L	-	T	-	R	L	-	T	-	R	L	-	T	-	R	L	-	T	-	R
Control:	Protected					Protected					Protected					Protected				
Rights:	Include					Include					Include					Include				
Min. Green:	7	7	7			7	7	7			7	7	7			7	7	7		
Lanes:	1	0	2	1	0	1	0	2	1	0	1	0	1	0	1	1	0	1	0	1
Volume Module:																				
Base Vol:	48	1374		14		81	2878		110		44		25		56	71		31		50
Growth Adj:	1.00	1.00		1.00		1.00	1.00		1.00		1.00		1.00		1.00	1.00		1.00		1.00
Initial Bse:	48	1374		14		81	2878		110		44		25		56	71		31		50
Added Vol:	0	0		0		0	0		0		0		0		0	0		0		0
PasserByVol:	0	0		0		0	0		0		0		0		0	0		0		0
Initial Fut:	48	1374		14		81	2878		110		44		25		56	71		31		50
User Adj:	1.00	1.00		1.00		1.00	1.00		1.00		1.00		1.00		1.00	1.00		1.00		1.00
PHF Adj:	1.00	1.00		1.00		1.00	1.00		1.00		1.00		1.00		1.00	1.00		1.00		1.00
PHF Volume:	48	1374		14		81	2878		110		44		25		56	71		31		50
Reduct Vol:	0	0		0		0	0		0		0		0		0	0		0		0
Reduced Vol:	48	1374		14		81	2878		110		44		25		56	71		31		50
PCE Adj:	1.00	1.00		1.00		1.00	1.00		1.00		1.00		1.00		1.00	1.00		1.00		1.00
MLF Adj:	1.00	1.00		1.00		1.00	1.00		1.00		1.00		1.00		1.00	1.00		1.00		1.00
FinalVolume:	48	1374		14		81	2878		110		44		25		56	71		31		50
Saturation Flow Module:																				
Sat/Lane:	1900	1900		1900		1900	1900		1900		1900		1900		1900	1900		1900		1900
Adjustment:	0.95	0.91		0.91		0.95	0.90		0.90		0.95		1.00		0.85	0.95		1.00		0.85
Lanes:	1.00	2.97		0.03		1.00	2.89		0.11		1.00		1.00		1.00	1.00		1.00		1.00
Final Sat.:	1805	5130		52		1805	4966		190		1805		1900		1615	1805		1900		1615
Capacity Analysis Module:																				
Vol/Sat:	0.03	0.27		0.27		0.04	0.58		0.58		0.02		0.01		0.03	0.04		0.02		0.03
Crit Moves:	****						****								****	****				
Green/Cycle:	0.07	0.55		0.55		0.15	0.63		0.63		0.07		0.07		0.07	0.07		0.07		0.07
Volume/Cap:	0.38	0.48		0.48		0.31	0.92		0.92		0.35		0.19		0.50	0.56		0.23		0.44
Delay/Veh:	46.3	13.7		13.7		38.9	21.2		21.2		46.0		44.5		48.2	50.7		44.9		47.4
User DelAdj:	1.00	1.00		1.00		1.00	1.00		1.00		1.00		1.00		1.00	1.00		1.00		1.00
AdjDel/Veh:	46.3	13.7		13.7		38.9	21.2		21.2		46.0		44.5		48.2	50.7		44.9		47.4
LOS by Move:	D	B		B		D	C		C		D		D		D	D		D		D
HCM2kAvgQ:	2	10		10		2	34		34		2		1		2	3		1		2

Note: Queue reported is the number of cars per lane.

Traffix 7.9.0215 (c) 2008 Dowling Assoc. Licensed to MMA, LONG BEACH, CA

Overlook Parkway Extension
Existing
PM Peak Hour

Level Of Service Computation Report
2000 HCM 4-Way Stop Method (Future Volume Alternative)

Intersection #23 Mary St/Hawarden Dr

Cycle (sec):	100	Critical Vol./Cap.(X):	0.207
Loss Time (sec):	0 (Y+R=4.0 sec)	Average Delay (sec/veh):	7.7
Optimal Cycle:	0	Level Of Service:	A

Street Name:	Mary St								Hawarden Dr								
Approach:	North Bound				South Bound				East Bound				West Bound				
Movement:	L	-	T	-	R	L	-	T	-	R	L	-	T	-	R	L	-	T	-	R	L	-	T	-	R
Control:	Stop Sign					Stop Sign					Stop Sign					Stop Sign				
Rights:	Include					Include					Include					Include				
Min. Green:	7	7	7			7	7	7			7	7	7			7	7	7		
Lanes:	0	1	0	0	0	0	0	0	1	0	0	0	1!	0	0	0	0	0	0	0
Volume Module:																				
Base Vol:	3	34		0		0	115		80		35		0		6	0		0		0
Growth Adj:	1.00	1.00		1.00		1.00	1.00		1.00		1.00		1.00		1.00	1.00		1.00		1.00
Initial Bse:	3	34		0		0	115		80		35		0		6	0		0		0
Added Vol:	0	0		0		0	0		0		0		0		0	0		0		0
PasserByVol:	0	0		0		0	0		0		0		0		0	0		0		0
Initial Fut:	3	34		0		0	115		80		35		0		6	0		0		0
User Adj:	1.00	1.00		1.00		1.00	1.00		1.00		1.00		1.00		1.00	1.00		1.00		1.00
PHF Adj:	1.00	1.00		1.00		1.00	1.00		1.00		1.00		1.00		1.00	1.00		1.00		1.00
PHF Volume:	3	34		0		0	115		80		35		0		6	0		0		0
Reduct Vol:	0	0		0		0	0		0		0		0		0	0		0		0
Reduced Vol:	3	34		0		0	115		80		35		0		6	0		0		0
PCE Adj:	1.00	1.00		1.00		1.00	1.00		1.00		1.00		1.00		1.00	1.00		1.00		1.00
MLF Adj:	1.00	1.00		1.00		1.00	1.00		1.00		1.00		1.00		1.00	1.00		1.00		1.00
FinalVolume:	3	34		0		0	115		80		35		0		6	0		0		0
Saturation Flow Module:																				
Adjustment:	1.00	1.00		1.00		1.00	1.00		1.00		1.00		1.00		1.00	1.00		1.00		1.00
Lanes:	0.08	0.92		0.00		0.00	0.59		0.41		0.85		0.00		0.15	0.00		0.00		0.00
Final Sat.:	69	779		0		0	556		387		664		0		114	0		0		0
Capacity Analysis Module:																				
Vol/Sat:	0.04	0.04		xxxx		xxxx	0.21		0.21		0.05		xxxx		0.05	xxxx		xxxx		xxxx
Crit Moves:		****					****								****					
Delay/Veh:	7.4	7.4		0.0		0.0	7.8		7.8		7.7		0.0		7.7	0.0		0.0		0.0
Delay Adj:	1.00	1.00		1.00		1.00	1.00		1.00		1.00		1.00		1.00	1.00		1.00		1.00
AdjDel/Veh:	7.4	7.4		0.0		0.0	7.8		7.8		7.7		0.0		7.7	0.0		0.0		0.0
LOS by Move:	A	A		*		*	A		A		A		*		A	*		*		*
ApproachDel:	7.4						7.8				7.7					xxxxxx				
Delay Adj:	1.00						1.00				1.00					xxxxx				
ApprAdjDel:	7.4						7.8				7.7					xxxxxx				
LOS by Appr:	A						A				A					*				
AllWayAvgQ:	0.0	0.0		0.0		0.3	0.3		0.3		0.1		0.1		0.1	0.0		0.0		0.0

Traffix 7.9.0215 (c) 2008 Dowling Assoc. Licensed to MMA, LONG BEACH, CA

Overlook Parkway Extension
Existing
PM Peak Hour

Note: Queue reported is the number of cars per lane.

Overlook Parkway Extension
Existing
PM Peak Hour

Level Of Service Computation Report
2000 HCM 4-Way Stop Method (Future Volume Alternative)

Intersection #24 Hawarden Dr/Overlook Pkwy

Cycle (sec):	100	Critical Vol./Cap.(X):	0.094
Loss Time (sec):	0 (Y+R=4.0 sec)	Average Delay (sec/veh):	7.8
Optimal Cycle:	0	Level Of Service:	A

Street Name:	Hawarden Dr									Overlook Pkwy							
Approach:	North Bound				South Bound				East Bound				West Bound				
Movement:	L	-	T	-	R	L	-	T	-	R	L	-	T	-	R	L	-	T	-	R
Control:	Stop Sign					Stop Sign					Stop Sign					Stop Sign				
Rights:	Include					Include					Include					Include				
Min. Green:	7	7	7			7	7	7			7	7	7			7	7	7		
Lanes:	0	0	1!	0	0	0	0	1!	0	0	1	0	1	1	0	1	0	1	1	0
Volume Module:																				
Base Vol:	26	18			5	15	44			14	10	103			37	2	73			10
Growth Adj:	1.00	1.00			1.00	1.00	1.00			1.00	1.00	1.00			1.00	1.00	1.00			1.00
Initial Bse:	26	18			5	15	44			14	10	103			37	2	73			10
Added Vol:	0	0			0	0	0			0	0	0			0	0	0			0
PasserByVol:	0	0			0	0	0			0	0	0			0	0	0			0
Initial Fut:	26	18			5	15	44			14	10	103			37	2	73			10
User Adj:	1.00	1.00			1.00	1.00	1.00			1.00	1.00	1.00			1.00	1.00	1.00			1.00
PHF Adj:	1.00	1.00			1.00	1.00	1.00			1.00	1.00	1.00			1.00	1.00	1.00			1.00
PHF Volume:	26	18			5	15	44			14	10	103			37	2	73			10
Reduct Vol:	0	0			0	0	0			0	0	0			0	0	0			0
Reduced Vol:	26	18			5	15	44			14	10	103			37	2	73			10
PCE Adj:	1.00	1.00			1.00	1.00	1.00			1.00	1.00	1.00			1.00	1.00	1.00			1.00
MLF Adj:	1.00	1.00			1.00	1.00	1.00			1.00	1.00	1.00			1.00	1.00	1.00			1.00
FinalVolume:	26	18			5	15	44			14	10	103			37	2	73			10
Saturation Flow Module:																				
Adjustment:	1.00	1.00			1.00	1.00	1.00			1.00	1.00	1.00			1.00	1.00	1.00			1.00
Lanes:	0.53	0.37			0.10	0.21	0.60			0.19	1.00	1.47			0.53	1.00	1.76			0.24
Final Sat.:	401	277			77	160	471			150	661	1098			415	652	1281			179
Capacity Analysis Module:																				
Vol/Sat:	0.06	0.06			0.06	0.09	0.09			0.09	0.02	0.09			0.09	0.00	0.06			0.06
Crit Moves:		****				****						****					****			
Delay/Veh:	7.9	7.9			7.9	7.8	7.8			7.8	8.1	7.9			7.6	8.1	7.8			7.7
Delay Adj:	1.00	1.00			1.00	1.00	1.00			1.00	1.00	1.00			1.00	1.00	1.00			1.00
AdjDel/Veh:	7.9	7.9			7.9	7.8	7.8			7.8	8.1	7.9			7.6	8.1	7.8			7.7
LOS by Move:	A	A			A	A	A			A	A	A			A	A	A			A
ApproachDel:	7.9					7.8					7.8					7.8				
Delay Adj:	1.00					1.00					1.00					1.00				
ApprAdjDel:	7.9					7.8					7.8					7.8				
LOS by Appr:	A					A					A					A				
AllWayAvgQ:	0.1	0.1			0.1	0.1	0.1			0.1	0.0	0.1			0.1	0.0	0.1			0.1

Overlook Parkway Extension
Existing
PM Peak Hour

Note: Queue reported is the number of cars per lane.

Overlook Parkway Extension
Existing
PM Peak Hour

Level Of Service Computation Report
2000 HCM 4-Way Stop Method (Future Volume Alternative)

Intersection #25 Crystal View Ter/Berry Rd

Cycle (sec):	100	Critical Vol./Cap.(X):	0.102
Loss Time (sec):	0 (Y+R=4.0 sec)	Average Delay (sec/veh):	7.4
Optimal Cycle:	0	Level Of Service:	A

Street Name:	Crystal View Ter							Berry Rd					
Approach:	North Bound			South Bound			East Bound			West Bound			
Movement:	L	- T	- R	L	- T	- R	L	- T	- R	L	- T	- R	
Control:	Stop Sign			Stop Sign			Stop Sign			Stop Sign			
Rights:	Include			Include			Include			Include			
Min. Green:	7	7	7	7	7	7	7	7	7	7	7	7	
Lanes:	0 0	1! 0	0	0 0	1! 0	0	0 0	1! 0	0	0 0	1! 0	0	
Volume Module:													
Base Vol:	1	24	29	55	28	2	2	0	1	31	2	57	
Growth Adj:	1.00	1.00	1.00	1.00	1.00	1.00	1.00	1.00	1.00	1.00	1.00	1.00	
Initial Bse:	1	24	29	55	28	2	2	0	1	31	2	57	
Added Vol:	0	0	0	0	0	0	0	0	0	0	0	0	
PasserByVol:	0	0	0	0	0	0	0	0	0	0	0	0	
Initial Fut:	1	24	29	55	28	2	2	0	1	31	2	57	
User Adj:	1.00	1.00	1.00	1.00	1.00	1.00	1.00	1.00	1.00	1.00	1.00	1.00	
PHF Adj:	1.00	1.00	1.00	1.00	1.00	1.00	1.00	1.00	1.00	1.00	1.00	1.00	
PHF Volume:	1	24	29	55	28	2	2	0	1	31	2	57	
Reduct Vol:	0	0	0	0	0	0	0	0	0	0	0	0	
Reduced Vol:	1	24	29	55	28	2	2	0	1	31	2	57	
PCE Adj:	1.00	1.00	1.00	1.00	1.00	1.00	1.00	1.00	1.00	1.00	1.00	1.00	
MLF Adj:	1.00	1.00	1.00	1.00	1.00	1.00	1.00	1.00	1.00	1.00	1.00	1.00	
FinalVolume:	1	24	29	55	28	2	2	0	1	31	2	57	
Saturation Flow Module:													
Adjustment:	1.00	1.00	1.00	1.00	1.00	1.00	1.00	1.00	1.00	1.00	1.00	1.00	
Lanes:	0.02	0.44	0.54	0.65	0.33	0.02	0.67	0.00	0.33	0.34	0.02	0.64	
Final Sat.:	17	405	489	537	273	20	551	0	275	310	20	570	
Capacity Analysis Module:													
Vol/Sat:	0.06	0.06	0.06	0.10	0.10	0.10	0.00	xxxx	0.00	0.10	0.10	0.10	
Crit Moves:	****			****			****			****			
Delay/Veh:	7.1	7.1	7.1	7.7	7.7	7.7	7.2	0.0	7.2	7.3	7.3	7.3	
Delay Adj:	1.00	1.00	1.00	1.00	1.00	1.00	1.00	1.00	1.00	1.00	1.00	1.00	
AdjDel/Veh:	7.1	7.1	7.1	7.7	7.7	7.7	7.2	0.0	7.2	7.3	7.3	7.3	
LOS by Move:	A	A	A	A	A	A	A	*	A	A	A	A	
ApproachDel:	7.1			7.7			7.2			7.3			
Delay Adj:	1.00			1.00			1.00			1.00			
ApprAdjDel:	7.1			7.7			7.2			7.3			
LOS by Appr:	A			A			A			A			
AllWayAvgQ:	0.1	0.1	0.1	0.1	0.1	0.1	0.0	0.0	0.0	0.1	0.1	0.1	

Overlook Parkway Extension
Existing
PM Peak Hour

Note: Queue reported is the number of cars per lane.

Overlook Parkway Extension
Existing
PM Peak Hour

Level Of Service Computation Report
2000 HCM 4-Way Stop Method (Future Volume Alternative)

Intersection #26 Corinthian Wy/Berry Rd

Cycle (sec):	100	Critical Vol./Cap.(X):	0.101
Loss Time (sec):	0 (Y+R=4.0 sec)	Average Delay (sec/veh):	7.4
Optimal Cycle:	0	Level Of Service:	A

Street Name:	Corinthian Wy									Berry Rd					
Approach:	North Bound			South Bound			East Bound			West Bound					
Movement:	L	-	T	-	R	L	-	T	-	R	L	-	T	-	R	L	-	T	-	R
Control:	Stop Sign			Stop Sign			Stop Sign			Stop Sign					
Rights:	Include			Include			Include			Include					
Min. Green:	7	7	7	7	7	7	7	7	7	7	7	7			
Lanes:	0	0	0	0	0	0	0	1!	0	0	0	1	0	0	0	0	0	0	1	0
Volume Module:															
Base Vol:	0	0	0	17	0	48	42	44	0	0	43	10			
Growth Adj:	1.00	1.00	1.00	1.00	1.00	1.00	1.00	1.00	1.00	1.00	1.00	1.00			
Initial Bse:	0	0	0	17	0	48	42	44	0	0	43	10			
Added Vol:	0	0	0	0	0	0	0	0	0	0	0	0			
PasserByVol:	0	0	0	0	0	0	0	0	0	0	0	0			
Initial Fut:	0	0	0	17	0	48	42	44	0	0	43	10			
User Adj:	1.00	1.00	1.00	1.00	1.00	1.00	1.00	1.00	1.00	1.00	1.00	1.00			
PHF Adj:	1.00	1.00	1.00	1.00	1.00	1.00	1.00	1.00	1.00	1.00	1.00	1.00			
PHF Volume:	0	0	0	17	0	48	42	44	0	0	43	10			
Reduct Vol:	0	0	0	0	0	0	0	0	0	0	0	0			
Reduced Vol:	0	0	0	17	0	48	42	44	0	0	43	10			
PCE Adj:	1.00	1.00	1.00	1.00	1.00	1.00	1.00	1.00	1.00	1.00	1.00	1.00			
MLF Adj:	1.00	1.00	1.00	1.00	1.00	1.00	1.00	1.00	1.00	1.00	1.00	1.00			
FinalVolume:	0	0	0	17	0	48	42	44	0	0	43	10			
Saturation Flow Module:															
Adjustment:	1.00	1.00	1.00	1.00	1.00	1.00	1.00	1.00	1.00	1.00	1.00	1.00			
Lanes:	0.00	0.00	0.00	0.26	0.00	0.74	0.49	0.51	0.00	0.00	0.81	0.19			
Final Sat.:	0	0	0	241	0	680	415	435	0	0	718	167			
Capacity Analysis Module:															
Vol/Sat:	xxxx	xxxx	xxxx	0.07	xxxx	0.07	0.10	0.10	xxxx	xxxx	0.06	0.06			
Crit Moves:				****				****			****				
Delay/Veh:	0.0	0.0	0.0	7.1	0.0	7.1	7.6	7.6	0.0	0.0	7.2	7.2			
Delay Adj:	1.00	1.00	1.00	1.00	1.00	1.00	1.00	1.00	1.00	1.00	1.00	1.00			
AdjDel/Veh:	0.0	0.0	0.0	7.1	0.0	7.1	7.6	7.6	0.0	0.0	7.2	7.2			
LOS by Move:	*	*	*	A	*	A	A	A	*	*	A	A			
ApproachDel:	xxxxxx			7.1			7.6			7.2					
Delay Adj:	xxxxx			1.00			1.00			1.00					
ApprAdjDel:	xxxxxx			7.1			7.6			7.2					
LOS by Appr:	*			A			A			A					
AllWayAvgQ:	0.0	0.0	0.0	0.1	0.1	0.1	0.1	0.1	0.1	0.1	0.1	0.1			

Overlook Parkway Extension
Existing
PM Peak Hour

Note: Queue reported is the number of cars per lane.

HCM Unsignalized Intersection Capacity Analysis
27: Madison St & Dufferin Ave

6/21/2011

Movement	EBL	EBR	SBL	SBR	NEL2	NEL	NET	SWT	SWR	SWR2
Lane Configurations										
Sign Control	Stop		Stop				Stop	Stop		
Volume (vph)	48	9	0	1	7	1	11	18	15	3
Peak Hour Factor	1.00	1.00	1.00	1.00	1.00	1.00	1.00	1.00	1.00	1.00
Hourly flow rate (vph)	48	9	0	1	7	1	11	18	15	3

Direction, Lane #	EB 1	SB 1	NE 1	SW 1
Volume Total (vph)	57	1	19	36
Volume Left (vph)	0	0	7	18
Volume Right (vph)	9	0	11	3
Hadj (s)	-0.08	0.02	-0.26	0.07
Departure Headway (s)	3.9	4.1	3.8	4.1
Degree Utilization, x	0.06	0.00	0.02	0.04
Capacity (veh/h)	911	847	904	876
Control Delay (s)	7.2	7.1	6.9	7.2
Approach Delay (s)	7.2	7.1	6.9	7.2
Approach LOS	A	A	A	A

Intersection Summary				
Delay		7.1		
HCM Level of Service		A		
Intersection Capacity Utilization		24.4%	ICU Level of Service	A
Analysis Period (min)		15		

Overlook Parkway Extension
Existing
PM Peak Hour

Level Of Service Computation Report
2000 HCM Unsignalized Method (Future Volume Alternative)

Intersection #28 Orozco Dr/Overlook Pkwy

Average Delay (sec/veh): 2.8 Worst Case Level Of Service: A[9.7]

Street Name:	Orozco Dr						Overlook Pkwy					
Approach:	North Bound			South Bound			East Bound			West Bound		
Movement:	L - T - R			L - T - R			L - T - R			L - T - R		
Control:	Stop Sign			Stop Sign			Uncontrolled			Uncontrolled		
Rights:	Include			Include			Include			Include		
Lanes:	0 0 1! 0 0			0 0 1! 0 0			1 0 1 1 0			1 0 1 1 0		
Volume Module:												
Base Vol:	5	1	1	44	9	6	7	78	4	0	79	11
Growth Adj:	1.00	1.00	1.00	1.00	1.00	1.00	1.00	1.00	1.00	1.00	1.00	1.00
Initial Bse:	5	1	1	44	9	6	7	78	4	0	79	11
Added Vol:	0	0	0	0	0	0	0	0	0	0	0	0
PasserByVol:	0	0	0	0	0	0	0	0	0	0	0	0
Initial Fut:	5	1	1	44	9	6	7	78	4	0	79	11
User Adj:	1.00	1.00	1.00	1.00	1.00	1.00	1.00	1.00	1.00	1.00	1.00	1.00
PHF Adj:	1.00	1.00	1.00	1.00	1.00	1.00	1.00	1.00	1.00	1.00	1.00	1.00
PHF Volume:	5	1	1	44	9	6	7	78	4	0	79	11
Reduct Vol:	0	0	0	0	0	0	0	0	0	0	0	0
FinalVolume:	5	1	1	44	9	6	7	78	4	0	79	11
Critical Gap Module:												
Critical Gp:	7.5	6.5	6.9	7.5	6.5	6.9	4.1	xxxx	xxxxx	xxxxx	xxxx	xxxxx
FollowUpTim:	3.5	4.0	3.3	3.5	4.0	3.3	2.2	xxxx	xxxxx	xxxxx	xxxx	xxxxx
Capacity Module:												
Cnflict Vol:	138	184	41	138	181	45	90	xxxx	xxxxx	xxxx	xxxx	xxxxx
Potent Cap.:	824	714	1028	824	717	1022	1518	xxxx	xxxxx	xxxx	xxxx	xxxxx
Move Cap.:	809	711	1028	820	714	1022	1518	xxxx	xxxxx	xxxx	xxxx	xxxxx
Volume/Cap:	0.01	0.00	0.00	0.05	0.01	0.01	0.00	xxxx	xxxx	xxxx	xxxx	xxxx
Level Of Service Module:												
2Way95thQ:	xxxx	xxxx	xxxxx	xxxx	xxxx	xxxxx	0.0	xxxx	xxxxx	xxxx	xxxx	xxxxx
Control Del:	xxxxx	xxxx	xxxxx	xxxxx	xxxx	xxxxx	7.4	xxxx	xxxxx	xxxxx	xxxx	xxxxx
LOS by Move:	*	*	*	*	*	*	A	*	*	*	*	*
Movement:	LT -	LTR -	RT	LT -	LTR -	RT	LT -	LTR -	RT	LT -	LTR -	RT
Shared Cap.:	xxxx	818	xxxxx	xxxx	818	xxxxx	xxxx	xxxx	xxxxx	xxxx	xxxx	xxxxx
SharedQueue:	xxxxx	0.0	xxxxx	xxxxx	0.2	xxxxx	xxxxx	xxxx	xxxxx	xxxxx	xxxx	xxxxx
Shrd ConDel:	xxxxx	9.4	xxxxx	xxxxx	9.7	xxxxx	xxxxx	xxxx	xxxxx	xxxxx	xxxx	xxxxx
Shared LOS:	*	A	*	*	A	*	*	*	*	*	*	*
ApproachDel:	9.4			9.7			xxxxxx			xxxxxx		
ApproachLOS:	A			A			*			*		

Note: Queue reported is the number of cars per lane.

Overlook Parkway Extension
Existing
PM Peak Hour

Level Of Service Computation Report
2000 HCM 4-Way Stop Method (Future Volume Alternative)

Intersection #51 Madison St/Victoria Ave (North)

Cycle (sec): 100 Critical Vol./Cap.(X): 0.328
Loss Time (sec): 0 (Y+R=4.0 sec) Average Delay (sec/veh): 9.7
Optimal Cycle: 0 Level Of Service: A

Street Name:	Madison St						Victoria Ave (North)					
Approach:	North Bound			South Bound			East Bound			West Bound		
Movement:	L - T - R			L - T - R			L - T - R			L - T - R		
Control:	Stop Sign			Stop Sign			Stop Sign			Stop Sign		
Rights:	Include			Include			Include			Include		
Min. Green:	7	7	7	7	7	7	7	7	7	7	7	7
Lanes:	0 1 0 0 0			0 0 1 0 1			0 0 0 0 0			0 1 0 0 1		
Volume Module:												
Base Vol:	4	62	0	0	218	29	0	0	0	4	192	79
Growth Adj:	1.00	1.00	1.00	1.00	1.00	1.00	1.00	1.00	1.00	1.00	1.00	1.00
Initial Bse:	4	62	0	0	218	29	0	0	0	4	192	79
Added Vol:	0	0	0	0	0	0	0	0	0	0	0	0
PasserByVol:	0	0	0	0	0	0	0	0	0	0	0	0
Initial Fut:	4	62	0	0	218	29	0	0	0	4	192	79
User Adj:	1.00	1.00	1.00	1.00	1.00	1.00	1.00	1.00	1.00	1.00	1.00	1.00
PHF Adj:	1.00	1.00	1.00	1.00	1.00	1.00	1.00	1.00	1.00	1.00	1.00	1.00
PHF Volume:	4	62	0	0	218	29	0	0	0	4	192	79
Reduct Vol:	0	0	0	0	0	0	0	0	0	0	0	0
Reduced Vol:	4	62	0	0	218	29	0	0	0	4	192	79
PCE Adj:	1.00	1.00	1.00	1.00	1.00	1.00	1.00	1.00	1.00	1.00	1.00	1.00
MLF Adj:	1.00	1.00	1.00	1.00	1.00	1.00	1.00	1.00	1.00	1.00	1.00	1.00
FinalVolume:	4	62	0	0	218	29	0	0	0	4	192	79
Saturation Flow Module:												
Adjustment:	1.00	1.00	1.00	1.00	1.00	1.00	1.00	1.00	1.00	1.00	1.00	1.00
Lanes:	0.06	0.94	0.00	0.00	1.00	1.00	0.00	0.00	0.00	0.02	0.98	1.00
Final Sat.:	38	592	0	0	665	759	0	0	0	13	645	753
Capacity Analysis Module:												
Vol/Sat:	0.10	0.10	xxxx	xxxx	0.33	0.04	xxxx	xxxx	xxxx	0.30	0.30	0.10
Crit Moves:	****				****						****	
Delay/Veh:	9.1	9.1	0.0	0.0	10.4	7.4	0.0	0.0	0.0	10.1	10.1	7.8
Delay Adj:	1.00	1.00	1.00	1.00	1.00	1.00	1.00	1.00	1.00	1.00	1.00	1.00
AdjDel/Veh:	9.1	9.1	0.0	0.0	10.4	7.4	0.0	0.0	0.0	10.1	10.1	7.8
LOS by Move:	A	A	*	*	B	A	*	*	*	B	B	A
ApproachDel:	9.1			10.0			xxxxxx			9.4		
Delay Adj:	1.00			1.00			xxxxx			1.00		
ApprAdjDel:	9.1			10.0			xxxxxx			9.4		
LOS by Appr:	A			B			*			A		
AllWayAvgQ:	0.1	0.1	0.1	0.0	0.4	0.0	0.0	0.0	0.0	0.4	0.4	0.1

Overlook Parkway Extension
Existing
PM Peak Hour

Note: Queue reported is the number of cars per lane.

Overlook Parkway Extension
Existing
PM Peak Hour

Level Of Service Computation Report
2000 HCM 4-Way Stop Method (Future Volume Alternative)

Intersection #52 Madison St/Victoria Ave (South)

Cycle (sec):	100	Critical Vol./Cap.(X):	0.436
Loss Time (sec):	0 (Y+R=4.0 sec)	Average Delay (sec/veh):	10.3
Optimal Cycle:	0	Level Of Service:	B

Street Name:	Madison St							Victoria Ave (South)					
Approach:	North Bound			South Bound			East Bound			West Bound			
Movement:	L	- T	- R	L	- T	- R	L	- T	- R	L	- T	- R	
Control:	Stop Sign			Stop Sign			Stop Sign			Stop Sign			
Rights:	Include			Include			Include			Include			
Min. Green:	7	7	7	7	7	7	7	7	7	7	7	7	
Lanes:	0 0	0 1	0	0 1	0 0	0	0 0	1! 0	0	0 0	0 0	0	
Volume Module:													
Base Vol:	0	24	6	152	70	0	42	284	12	0	0	0	
Growth Adj:	1.00	1.00	1.00	1.00	1.00	1.00	1.00	1.00	1.00	1.00	1.00	1.00	
Initial Bse:	0	24	6	152	70	0	42	284	12	0	0	0	
Added Vol:	0	0	0	0	0	0	0	0	0	0	0	0	
PasserByVol:	0	0	0	0	0	0	0	0	0	0	0	0	
Initial Fut:	0	24	6	152	70	0	42	284	12	0	0	0	
User Adj:	1.00	1.00	1.00	1.00	1.00	1.00	1.00	1.00	1.00	1.00	1.00	1.00	
PHF Adj:	1.00	1.00	1.00	1.00	1.00	1.00	1.00	1.00	1.00	1.00	1.00	1.00	
PHF Volume:	0	24	6	152	70	0	42	284	12	0	0	0	
Reduct Vol:	0	0	0	0	0	0	0	0	0	0	0	0	
Reduced Vol:	0	24	6	152	70	0	42	284	12	0	0	0	
PCE Adj:	1.00	1.00	1.00	1.00	1.00	1.00	1.00	1.00	1.00	1.00	1.00	1.00	
MLF Adj:	1.00	1.00	1.00	1.00	1.00	1.00	1.00	1.00	1.00	1.00	1.00	1.00	
FinalVolume:	0	24	6	152	70	0	42	284	12	0	0	0	
Saturation Flow Module:													
Adjustment:	1.00	1.00	1.00	1.00	1.00	1.00	1.00	1.00	1.00	1.00	1.00	1.00	
Lanes:	0.00	0.80	0.20	0.68	0.32	0.00	0.12	0.84	0.04	0.00	0.00	0.00	
Final Sat.:	0	554	138	485	223	0	96	652	28	0	0	0	
Capacity Analysis Module:													
Vol/Sat:	xxxx	0.04	0.04	0.31	0.31	xxxx	0.44	0.44	0.44	xxxx	xxxx	xxxx	
Crit Moves:		****			****		****						
Delay/Veh:	0.0	8.0	8.0	9.9	9.9	0.0	10.8	10.8	10.8	0.0	0.0	0.0	
Delay Adj:	1.00	1.00	1.00	1.00	1.00	1.00	1.00	1.00	1.00	1.00	1.00	1.00	
AdjDel/Veh:	0.0	8.0	8.0	9.9	9.9	0.0	10.8	10.8	10.8	0.0	0.0	0.0	
LOS by Move:	*	A	A	A	A	*	B	B	B	*	*	*	
ApproachDel:		8.0			9.9			10.8			xxxxxx		
Delay Adj:		1.00			1.00			1.00			xxxxx		
ApprAdjDel:		8.0			9.9			10.8			xxxxxx		
LOS by Appr:		A			A			B			*		
AllWayAvgQ:	0.0	0.0	0.0	0.4	0.4	0.4	0.7	0.7	0.7	0.0	0.0	0.0	

Overlook Parkway Extension
Existing
PM Peak Hour

Note: Queue reported is the number of cars per lane.

Overlook Parkway Extension
Existing
PM Peak Hour

Level Of Service Computation Report
2000 HCM 4-Way Stop Method (Future Volume Alternative)

Intersection #81 Washington St/Victoria Ave (North)

Cycle (sec):	100	Critical Vol./Cap.(X):	0.570
Loss Time (sec):	0 (Y+R=4.0 sec)	Average Delay (sec/veh):	14.4
Optimal Cycle:	0	Level Of Service:	B

Street Name:	Washington St						Victoria Ave (North)					
Approach:	North Bound			South Bound			East Bound			West Bound		
Movement:	L -	T -	R	L -	T -	R	L -	T -	R	L -	T -	R
Control:	Stop Sign			Stop Sign			Stop Sign			Stop Sign		
Rights:	Include			Include			Include			Include		
Min. Green:	7	7	7	7	7	7	7	7	7	7	7	7
Lanes:	0 1	1 0	0	0 0	0 1	0	0 0	0 0	0	1 0	0 1	0
Volume Module:												
Base Vol:	89	228	0	0	296	5	0	0	0	301	172	20
Growth Adj:	1.00	1.00	1.00	1.00	1.00	1.00	1.00	1.00	1.00	1.00	1.00	1.00
Initial Bse:	89	228	0	0	296	5	0	0	0	301	172	20
Added Vol:	0	0	0	0	0	0	0	0	0	0	0	0
PasserByVol:	0	0	0	0	0	0	0	0	0	0	0	0
Initial Fut:	89	228	0	0	296	5	0	0	0	301	172	20
User Adj:	1.00	1.00	1.00	1.00	1.00	1.00	1.00	1.00	1.00	1.00	1.00	1.00
PHF Adj:	1.00	1.00	1.00	1.00	1.00	1.00	1.00	1.00	1.00	1.00	1.00	1.00
PHF Volume:	89	228	0	0	296	5	0	0	0	301	172	20
Reduct Vol:	0	0	0	0	0	0	0	0	0	0	0	0
Reduced Vol:	89	228	0	0	296	5	0	0	0	301	172	20
PCE Adj:	1.00	1.00	1.00	1.00	1.00	1.00	1.00	1.00	1.00	1.00	1.00	1.00
MLF Adj:	1.00	1.00	1.00	1.00	1.00	1.00	1.00	1.00	1.00	1.00	1.00	1.00
FinalVolume:	89	228	0	0	296	5	0	0	0	301	172	20
Saturation Flow Module:												
Adjustment:	1.00	1.00	1.00	1.00	1.00	1.00	1.00	1.00	1.00	1.00	1.00	1.00
Lanes:	0.56	1.44	0.00	0.00	0.98	0.02	0.00	0.00	0.00	1.00	0.90	0.10
Final Sat.:	295	778	0	0	551	9	0	0	0	528	515	60
Capacity Analysis Module:												
Vol/Sat:	0.30	0.29	xxxx	xxxx	0.54	0.54	xxxx	xxxx	xxxx	0.57	0.33	0.33
Crit Moves:	****				****					****		
Delay/Veh:	12.1	11.7	0.0	0.0	16.0	16.0	0.0	0.0	0.0	17.4	11.7	11.7
Delay Adj:	1.00	1.00	1.00	1.00	1.00	1.00	1.00	1.00	1.00	1.00	1.00	1.00
AdjDel/Veh:	12.1	11.7	0.0	0.0	16.0	16.0	0.0	0.0	0.0	17.4	11.7	11.7
LOS by Move:	B	B	*	*	C	C	*	*	*	C	B	B
ApproachDel:	11.8			16.0			xxxxxx			15.2		
Delay Adj:	1.00			1.00			xxxxx			1.00		
ApprAdjDel:	11.8			16.0			xxxxxx			15.2		
LOS by Appr:	B			C			*			C		
AllWayAvgQ:	0.4	0.4	0.0	1.0	1.0	1.0	0.0	0.0	0.0	1.2	0.5	0.5

Overlook Parkway Extension
Existing
PM Peak Hour

Note: Queue reported is the number of cars per lane.

Overlook Parkway Extension
Existing
PM Peak Hour

Level Of Service Computation Report
2000 HCM 4-Way Stop Method (Future Volume Alternative)

Intersection #82 Washington St/Victoria Ave (South)

Cycle (sec):	100	Critical Vol./Cap.(X):	1.042
Loss Time (sec):	0 (Y+R=4.0 sec)	Average Delay (sec/veh):	37.1
Optimal Cycle:	0	Level Of Service:	E

Street Name:	Washington St								Victoria Ave (South)					
Approach:	North Bound			South Bound			East Bound			West Bound				
Movement:	L	- T	- R	L	- T	- R	L	- T	- R	L	- T	- R		
Control:	Stop Sign			Stop Sign			Stop Sign			Stop Sign				
Rights:	Include			Include			Include			Include				
Min. Green:	7	7	7	7	7	7	7	7	7	7	7	7		
Lanes:	0 0	2 0	1	0 1	0 0	0	0 1	0 0	1	0 0	0 0	0		
Volume Module:														
Base Vol:	0	312	153	3	594	0	5	207	217	0	0	0		
Growth Adj:	1.00	1.00	1.00	1.00	1.00	1.00	1.00	1.00	1.00	1.00	1.00	1.00		
Initial Bse:	0	312	153	3	594	0	5	207	217	0	0	0		
Added Vol:	0	0	0	0	0	0	0	0	0	0	0	0		
PasserByVol:	0	0	0	0	0	0	0	0	0	0	0	0		
Initial Fut:	0	312	153	3	594	0	5	207	217	0	0	0		
User Adj:	1.00	1.00	1.00	1.00	1.00	1.00	1.00	1.00	1.00	1.00	1.00	1.00		
PHF Adj:	1.00	1.00	1.00	1.00	1.00	1.00	1.00	1.00	1.00	1.00	1.00	1.00		
PHF Volume:	0	312	153	3	594	0	5	207	217	0	0	0		
Reduct Vol:	0	0	0	0	0	0	0	0	0	0	0	0		
Reduced Vol:	0	312	153	3	594	0	5	207	217	0	0	0		
PCE Adj:	1.00	1.00	1.00	1.00	1.00	1.00	1.00	1.00	1.00	1.00	1.00	1.00		
MLF Adj:	1.00	1.00	1.00	1.00	1.00	1.00	1.00	1.00	1.00	1.00	1.00	1.00		
FinalVolume:	0	312	153	3	594	0	5	207	217	0	0	0		
Saturation Flow Module:														
Adjustment:	1.00	1.00	1.00	1.00	1.00	1.00	1.00	1.00	1.00	1.00	1.00	1.00		
Lanes:	0.00	2.00	1.00	0.01	0.99	0.00	0.02	0.98	1.00	0.00	0.00	0.00		
Final Sat.:	0	1079	602	3	570	0	12	496	564	0	0	0		
Capacity Analysis Module:														
Vol/Sat:	xxxx	0.29	0.25	1.04	1.04	xxxx	0.42	0.42	0.38	xxxx	xxxx	xxxx		
Crit Moves:		****			****			****						
Delay/Veh:	0.0	11.9	10.5	73.9	73.9	0.0	14.5	14.5	12.8	0.0	0.0	0.0		
Delay Adj:	1.00	1.00	1.00	1.00	1.00	1.00	1.00	1.00	1.00	1.00	1.00	1.00		
AdjDel/Veh:	0.0	11.9	10.5	73.9	73.9	0.0	14.5	14.5	12.8	0.0	0.0	0.0		
LOS by Move:	*	B	B	F	F	*	B	B	B	*	*	*		
ApproachDel:		11.4			73.9			13.7			xxxxxx			
Delay Adj:		1.00			1.00			1.00			xxxxx			
ApprAdjDel:		11.4			73.9			13.7			xxxxxx			
LOS by Appr:		B			F			B			*			
AllWayAvgQ:	0.0	0.4	0.3	10.3	10.3	10.3	0.7	0.7	0.6	0.0	0.0	0.0		

Overlook Parkway Extension
Existing
PM Peak Hour

Note: Queue reported is the number of cars per lane.

Overlook Parkway Extension
Existing
PM Peak Hour

Level Of Service Computation Report
2000 HCM 4-Way Stop Method (Future Volume Alternative)

Intersection #221 Mary St/Victoria Ave (North)

Cycle (sec):	100	Critical Vol./Cap.(X):	0.685
Loss Time (sec):	0 (Y+R=4.0 sec)	Average Delay (sec/veh):	16.7
Optimal Cycle:	0	Level Of Service:	C

Street Name:	Mary St							Victoria Ave (North)					
Approach:	North Bound			South Bound			East Bound			West Bound			
Movement:	L	- T	- R	L	- T	- R	L	- T	- R	L	- T	- R	
Control:	Stop Sign			Stop Sign			Stop Sign			Stop Sign			
Rights:	Include			Include			Include			Include			
Min. Green:	7	7	7	7	7	7	7	7	7	7	7	7	
Lanes:	0 1	0 0	0	0 0	0 1	0	0 0	0 0	0	0 0	1! 0	0	
Volume Module:													
Base Vol:	10	177	0	0	239	230	0	0	0	103	278	47	
Growth Adj:	1.00	1.00	1.00	1.00	1.00	1.00	1.00	1.00	1.00	1.00	1.00	1.00	
Initial Bse:	10	177	0	0	239	230	0	0	0	103	278	47	
Added Vol:	0	0	0	0	0	0	0	0	0	0	0	0	
PasserByVol:	0	0	0	0	0	0	0	0	0	0	0	0	
Initial Fut:	10	177	0	0	239	230	0	0	0	103	278	47	
User Adj:	1.00	1.00	1.00	1.00	1.00	1.00	1.00	1.00	1.00	1.00	1.00	1.00	
PHF Adj:	1.00	1.00	1.00	1.00	1.00	1.00	1.00	1.00	1.00	1.00	1.00	1.00	
PHF Volume:	10	177	0	0	239	230	0	0	0	103	278	47	
Reduct Vol:	0	0	0	0	0	0	0	0	0	0	0	0	
Reduced Vol:	10	177	0	0	239	230	0	0	0	103	278	47	
PCE Adj:	1.00	1.00	1.00	1.00	1.00	1.00	1.00	1.00	1.00	1.00	1.00	1.00	
MLF Adj:	1.00	1.00	1.00	1.00	1.00	1.00	1.00	1.00	1.00	1.00	1.00	1.00	
FinalVolume:	10	177	0	0	239	230	0	0	0	103	278	47	
Saturation Flow Module:													
Adjustment:	1.00	1.00	1.00	1.00	1.00	1.00	1.00	1.00	1.00	1.00	1.00	1.00	
Lanes:	0.05	0.95	0.00	0.00	0.51	0.49	0.00	0.00	0.00	0.24	0.65	0.11	
Final Sat.:	31	553	0	0	349	336	0	0	0	153	412	70	
Capacity Analysis Module:													
Vol/Sat:	0.32	0.32	xxxx	xxxx	0.68	0.68	xxxx	xxxx	xxxx	0.67	0.67	0.67	
Crit Moves:		****				****					****		
Delay/Veh:	11.2	11.2	0.0	0.0	17.6	17.6	0.0	0.0	0.0	18.1	18.1	18.1	
Delay Adj:	1.00	1.00	1.00	1.00	1.00	1.00	1.00	1.00	1.00	1.00	1.00	1.00	
AdjDel/Veh:	11.2	11.2	0.0	0.0	17.6	17.6	0.0	0.0	0.0	18.1	18.1	18.1	
LOS by Move:	B	B	*	*	C	C	*	*	*	C	C	C	
ApproachDel:		11.2			17.6			xxxxxx			18.1		
Delay Adj:		1.00			1.00			xxxxx			1.00		
ApprAdjDel:		11.2			17.6			xxxxxx			18.1		
LOS by Appr:		B			C			*			C		
AllWayAvgQ:	0.4	0.4	0.4	1.8	1.8	1.8	0.0	0.0	0.0	1.7	1.7	1.7	

Overlook Parkway Extension
Existing
PM Peak Hour

Note: Queue reported is the number of cars per lane.

Overlook Parkway Extension
Existing
PM Peak Hour

Level Of Service Computation Report
2000 HCM 4-Way Stop Method (Future Volume Alternative)

Intersection #222 Mary St/Victoria Ave (South)

Cycle (sec):	100	Critical Vol./Cap.(X):	0.495
Loss Time (sec):	0 (Y+R=4.0 sec)	Average Delay (sec/veh):	11.7
Optimal Cycle:	0	Level Of Service:	B

Street Name:	Mary St						Victoria Ave (South)					
Approach:	North Bound			South Bound			East Bound			West Bound		
Movement:	L	- T	- R	L	- T	- R	L	- T	- R	L	- T	- R
Control:	Stop Sign			Stop Sign			Stop Sign			Stop Sign		
Rights:	Include			Include			Include			Include		
Min. Green:	7	7	7	7	7	7	7	7	7	7	7	7
Lanes:	0 0	0 1	0	0 1	0 0	0	1 0	0 1	0	0 0	0 0	0
Volume Module:												
Base Vol:	0	103	47	75	267	0	84	245	20	0	0	0
Growth Adj:	1.00	1.00	1.00	1.00	1.00	1.00	1.00	1.00	1.00	1.00	1.00	1.00
Initial Bse:	0	103	47	75	267	0	84	245	20	0	0	0
Added Vol:	0	0	0	0	0	0	0	0	0	0	0	0
PasserByVol:	0	0	0	0	0	0	0	0	0	0	0	0
Initial Fut:	0	103	47	75	267	0	84	245	20	0	0	0
User Adj:	1.00	1.00	1.00	1.00	1.00	1.00	1.00	1.00	1.00	1.00	1.00	1.00
PHF Adj:	1.00	1.00	1.00	1.00	1.00	1.00	1.00	1.00	1.00	1.00	1.00	1.00
PHF Volume:	0	103	47	75	267	0	84	245	20	0	0	0
Reduct Vol:	0	0	0	0	0	0	0	0	0	0	0	0
Reduced Vol:	0	103	47	75	267	0	84	245	20	0	0	0
PCE Adj:	1.00	1.00	1.00	1.00	1.00	1.00	1.00	1.00	1.00	1.00	1.00	1.00
MLF Adj:	1.00	1.00	1.00	1.00	1.00	1.00	1.00	1.00	1.00	1.00	1.00	1.00
FinalVolume:	0	103	47	75	267	0	84	245	20	0	0	0
Saturation Flow Module:												
Adjustment:	1.00	1.00	1.00	1.00	1.00	1.00	1.00	1.00	1.00	1.00	1.00	1.00
Lanes:	0.00	0.69	0.31	0.22	0.78	0.00	1.00	0.92	0.08	0.00	0.00	0.00
Final Sat.:	0	461	210	151	539	0	564	570	47	0	0	0
Capacity Analysis Module:												
Vol/Sat:	xxxx	0.22	0.22	0.50	0.50	xxxx	0.15	0.43	0.43	xxxx	xxxx	xxxx
Crit Moves:		****			****			****				
Delay/Veh:	0.0	9.4	9.4	12.7	12.7	0.0	9.9	12.2	12.2	0.0	0.0	0.0
Delay Adj:	1.00	1.00	1.00	1.00	1.00	1.00	1.00	1.00	1.00	1.00	1.00	1.00
AdjDel/Veh:	0.0	9.4	9.4	12.7	12.7	0.0	9.9	12.2	12.2	0.0	0.0	0.0
LOS by Move:	*	A	A	B	B	*	A	B	B	*	*	*
ApproachDel:		9.4			12.7			11.7			xxxxxx	
Delay Adj:		1.00			1.00			1.00			xxxxx	
ApprAdjDel:		9.4			12.7			11.7			xxxxxx	
LOS by Appr:		A			B			B			*	
AllWayAvgQ:	0.3	0.3	0.3	0.9	0.9	0.9	0.2	0.7	0.7	0.0	0.0	0.0

Overlook Parkway Extension
Existing
PM Peak Hour

Note: Queue reported is the number of cars per lane.

Overlook Parkway Extension
Ex Open + Alt3
AM Peak Hour

Scenario Report

Scenario:	Ex Open + Alt3 AM
Command:	Ex Open + Alt3 AM
Volume:	Ex Open + Alt3 AM
Geometry:	Ex + Alt3
Impact Fee:	Default Impact Fee
Trip Generation:	none
Trip Distribution:	none
Paths:	Default Path
Routes:	Default Route
Configuration:	Ex Open + Alt3 AM

Overlook Parkway Extension
Ex Open + Alt3
AM Peak Hour

Impact Analysis Report
Level Of Service

Intersection	Base LOS	Base Del/ Veh	Base V/ C	Future LOS	Future Del/ Veh	Future V/ C	Change in
# 1 Madison St/SR-91 WB Ramps	C	29.1	0.659	C	29.1	0.659	+ 0.000 D/V
# 2 Madison St/SR-91 EB Ramps	C	27.7	0.497	C	27.7	0.497	+ 0.000 D/V
# 3 Madison St/Indiana Ave	D	39.0	0.805	D	39.0	0.805	+ 0.000 D/V
# 4 Madison St/Lincoln Ave	C	30.5	0.346	C	30.5	0.346	+ 0.000 D/V
# 6 Washington St/Indiana Ave	C	24.9	0.557	C	24.9	0.557	+ 0.000 D/V
# 7 Washington St/Lincoln Ave	C	22.9	0.871	C	22.9	0.871	+ 0.000 V/C
# 9 Washington St/Overlook Pkwy	C	27.4	0.659	C	27.4	0.659	+ 0.000 D/V
# 10 Riverside Ave-SR-91 WB/Arlingt	C	31.4	0.815	C	31.4	0.815	+ 0.000 D/V
# 11 Indiana Ave-SR-91 EB/Arlington	C	26.0	0.673	C	26.0	0.673	+ 0.000 D/V
# 12 Victoria Ave/Arlington Ave	D	42.7	0.937	D	42.7	0.937	+ 0.000 D/V
# 13 Alessandro Blvd/Arlington Ave	C	28.4	0.713	C	28.4	0.713	+ 0.000 D/V
# 14 Alessandro Blvd/Overlook Pkwy	C	28.4	0.805	C	28.4	0.805	+ 0.000 D/V
# 15 Alessandro Blvd/Trautwein Rd	C	33.3	0.841	C	33.3	0.841	+ 0.000 D/V
# 16 Crystal View Ter/Overlook Pkwy	B	10.3	0.395	B	10.3	0.395	+ 0.000 V/C
# 17 Kingdom Dr/Overlook Pkwy	C	17.7	0.000	C	17.7	0.000	+ 0.000 D/V
# 18 Kingdom Dr/Green Orchard Pl	A	8.7	0.000	A	8.7	0.000	+ 0.000 D/V
# 19 Trautwein Rd/John F. Kennedy D	C	32.6	0.844	C	32.6	0.844	+ 0.000 D/V
# 20 Washington St/Bradley St	C	20.5	0.572	C	20.5	0.572	+ 0.000 D/V
# 21 Alessandro Blvd/Via Vista Dr	B	19.2	0.716	B	19.2	0.716	+ 0.000 D/V
# 23 Mary St/Hawarden Dr	A	8.4	0.246	A	8.4	0.246	+ 0.000 V/C
# 24 Hawarden Dr/Overlook Pkwy	B	10.4	0.394	B	10.4	0.394	+ 0.000 V/C
# 25 Crystal View Ter/Berry Rd	A	7.5	0.164	A	7.5	0.164	+ 0.000 V/C
# 26 Corinthian Wy/Berry Rd	A	7.4	0.118	A	7.4	0.118	+ 0.000 V/C

Traffix 7.9.0415 (c) 2007 Dowling Assoc. Licensed to MMA, LONG BEACH, CA

Overlook Parkway Extension
Ex Open + Alt3
AM Peak Hour

Intersection	Base LOS	Base Del/ Veh	Base V/ C	Future LOS	Future Del/ Veh	Future V/ C	Change in
# 28 Orozco Dr/Overlook Pkwy	C	16.3	0.000	C	16.3	0.000	+ 0.000 D/V
# 51 Madison St/Victoria Ave (North	B	11.5	0.496	B	11.5	0.496	+ 0.000 V/C
# 52 Madison St/Victoria Ave (South	B	10.5	0.477	B	10.5	0.477	+ 0.000 V/C
# 81 Washington St/Victoria Ave (No	B	14.3	0.590	B	14.3	0.590	+ 0.000 V/C
# 82 Washington St/Victoria Ave (So	B	14.7	0.566	B	14.7	0.566	+ 0.000 V/C
#221 Mary St/Victoria Ave (North)	C	18.1	0.786	C	18.1	0.786	+ 0.000 V/C
#222 Mary St/Victoria Ave (South)	B	13.5	0.597	B	13.5	0.597	+ 0.000 V/C

Traffix 7.9.0415 (c) 2007 Dowling Assoc. Licensed to MMA, LONG BEACH, CA

Overlook Parkway Extension
Ex Open + Alt3
AM Peak Hour

Level Of Service Computation Report
2000 HCM Operations Method (Future Volume Alternative)

Intersection #1 Madison St/SR-91 WB Ramps

Cycle (sec):	100	Critical Vol./Cap.(X):	0.659
Loss Time (sec):	12 (Y+R=4.0 sec)	Average Delay (sec/veh):	29.1
Optimal Cycle:	54	Level Of Service:	C

Street Name:	Madison St						SR-91 WB Ramps					
Approach:	North Bound			South Bound			East Bound			West Bound		
Movement:	L - T - R			L - T - R			L - T - R			L - T - R		
Control:	Protected			Protected			Split Phase			Split Phase		
Rights:	Include			Include			Include			Include		
Min. Green:	7	7	7	7	7	7	7	7	7	7	7	7
Lanes:	1 0	2 0	0	0 0	3 0	1	0 0	0 0	0	0 1	0 0	1
Volume Module:												
Base Vol:	431	627	0	0	448	260	0	0	0	306	6	212
Growth Adj:	1.00	1.00	1.00	1.00	1.00	1.00	1.00	1.00	1.00	1.00	1.00	1.00
Initial Bse:	431	627	0	0	448	260	0	0	0	306	6	212
Added Vol:	0	0	0	0	0	0	0	0	0	0	0	0
PasserByVol:	0	0	0	0	0	0	0	0	0	0	0	0
Initial Fut:	431	627	0	0	448	260	0	0	0	306	6	212
User Adj:	1.00	1.00	1.00	1.00	1.00	1.00	1.00	1.00	1.00	1.00	1.00	1.00
PHF Adj:	1.00	1.00	1.00	1.00	1.00	1.00	1.00	1.00	1.00	1.00	1.00	1.00
PHF Volume:	431	627	0	0	448	260	0	0	0	306	6	212
Reduct Vol:	0	0	0	0	0	0	0	0	0	0	0	0
Reduced Vol:	431	627	0	0	448	260	0	0	0	306	6	212
PCE Adj:	1.00	1.00	1.00	1.00	1.00	1.00	1.00	1.00	1.00	1.00	1.00	1.00
MLF Adj:	1.00	1.00	1.00	1.00	1.00	1.00	1.00	1.00	1.00	1.00	1.00	1.00
FinalVolume:	431	627	0	0	448	260	0	0	0	306	6	212
Saturation Flow Module:												
Sat/Lane:	1900	1900	1900	1900	1900	1900	1900	1900	1900	1900	1900	1900
Adjustment:	0.95	0.95	1.00	1.00	0.91	0.85	1.00	1.00	1.00	0.91	0.91	0.85
Lanes:	1.00	2.00	0.00	0.00	3.00	1.00	0.00	0.00	0.00	0.98	0.02	1.00
Final Sat.:	1805	3610	0	0	5187	1615	0	0	0	1699	33	1615
Capacity Analysis Module:												
Vol/Sat:	0.24	0.17	0.00	0.00	0.09	0.16	0.00	0.00	0.00	0.18	0.18	0.13
Crit Moves:	****					****				****		
Green/Cycle:	0.36	0.43	0.00	0.00	0.24	0.24	0.00	0.00	0.00	0.27	0.27	0.27
Volume/Cap:	0.66	0.40	0.00	0.00	0.35	0.66	0.00	0.00	0.00	0.66	0.66	0.48
Delay/Veh:	29.2	19.7	0.0	0.0	31.4	38.1	0.0	0.0	0.0	35.6	35.6	31.2
User DelAdj:	1.00	1.00	1.00	1.00	1.00	1.00	1.00	1.00	1.00	1.00	1.00	1.00
AdjDel/Veh:	29.2	19.7	0.0	0.0	31.4	38.1	0.0	0.0	0.0	35.6	35.6	31.2
LOS by Move:	C	B	A	A	C	D	A	A	A	D	D	C
HCM2kAvgQ:	12	7	0	0	4	8	0	0	0	9	9	6

Note: Queue reported is the number of cars per lane.

Traffix 7.9.0415 (c) 2007 Dowling Assoc. Licensed to MMA, LONG BEACH, CA

Overlook Parkway Extension
Ex Open + Alt3
AM Peak Hour

Level Of Service Computation Report
2000 HCM Operations Method (Future Volume Alternative)

Intersection #2 Madison St/SR-91 EB Ramps

Cycle (sec):	100	Critical Vol./Cap.(X):	0.497
Loss Time (sec):	12 (Y+R=4.0 sec)	Average Delay (sec/veh):	27.7
Optimal Cycle:	50	Level Of Service:	C

Street Name:	Madison St						SR-91 EB Ramps					
Approach:	North Bound			South Bound			East Bound			West Bound		
Movement:	L - T - R			L - T - R			L - T - R			L - T - R		
Control:	Protected			Protected			Protected			Protected		
Rights:	Include			Include			Include			Include		
Min. Green:	7	7	7	7	7	7	7	7	7	7	7	7
Lanes:	0 0	3 0	1	1 0	2 0	0	0 1	0 0	1	0 0	0 0	0
Volume Module:												
Base Vol:	0	829	251	200	543	0	235	13	269	0	0	0
Growth Adj:	1.00	1.00	1.00	1.00	1.00	1.00	1.00	1.00	1.00	1.00	1.00	1.00
Initial Bse:	0	829	251	200	543	0	235	13	269	0	0	0
Added Vol:	0	0	0	0	0	0	0	0	0	0	0	0
PasserByVol:	0	0	0	0	0	0	0	0	0	0	0	0
Initial Fut:	0	829	251	200	543	0	235	13	269	0	0	0
User Adj:	1.00	1.00	1.00	1.00	1.00	1.00	1.00	1.00	1.00	1.00	1.00	1.00
PHF Adj:	1.00	1.00	1.00	1.00	1.00	1.00	1.00	1.00	1.00	1.00	1.00	1.00
PHF Volume:	0	829	251	200	543	0	235	13	269	0	0	0
Reduct Vol:	0	0	0	0	0	0	0	0	0	0	0	0
Reduced Vol:	0	829	251	200	543	0	235	13	269	0	0	0
PCE Adj:	1.00	1.00	1.00	1.00	1.00	1.00	1.00	1.00	1.00	1.00	1.00	1.00
MLF Adj:	1.00	1.00	1.00	1.00	1.00	1.00	1.00	1.00	1.00	1.00	1.00	1.00
FinalVolume:	0	829	251	200	543	0	235	13	269	0	0	0
Saturation Flow Module:												
Sat/Lane:	1900	1900	1900	1900	1900	1900	1900	1900	1900	1900	1900	1900
Adjustment:	1.00	0.91	0.85	0.95	0.95	1.00	0.93	0.93	0.85	1.00	1.00	1.00
Lanes:	0.00	3.00	1.00	1.00	2.00	0.00	0.95	0.05	1.00	0.00	0.00	0.00
Final Sat.:	0	5187	1615	1805	3610	0	1678	93	1615	0	0	0
Capacity Analysis Module:												
Vol/Sat:	0.00	0.16	0.16	0.11	0.15	0.00	0.14	0.14	0.17	0.00	0.00	0.00
Crit Moves:		****		****					****			
Green/Cycle:	0.00	0.32	0.32	0.22	0.37	0.00	0.27	0.34	0.34	0.00	0.00	0.00
Volume/Cap:	0.00	0.50	0.48	0.50	0.40	0.00	0.52	0.42	0.50	0.00	0.00	0.00
Delay/Veh:	0.0	27.6	27.9	34.9	23.4	0.0	32.0	26.2	27.2	0.0	0.0	0.0
User DelAdj:	1.00	1.00	1.00	1.00	1.00	1.00	1.00	1.00	1.00	1.00	1.00	1.00
AdjDel/Veh:	0.0	27.6	27.9	34.9	23.4	0.0	32.0	26.2	27.2	0.0	0.0	0.0
LOS by Move:	A	C	C	C	C	A	C	C	C	A	A	A
HCM2kAvgQ:	0	8	7	6	7	0	7	6	7	0	0	0

Note: Queue reported is the number of cars per lane.

Traffix 7.9.0415 (c) 2007 Dowling Assoc. Licensed to MMA, LONG BEACH, CA

Overlook Parkway Extension
Ex Open + Alt3
AM Peak Hour

Level Of Service Computation Report
2000 HCM Operations Method (Future Volume Alternative)

Intersection #3 Madison St/Indiana Ave

Cycle (sec): 100 | Critical Vol./Cap.(X): 0.805
Loss Time (sec): 16 (Y+R=4.0 sec) | Average Delay (sec/veh): 39.0
Optimal Cycle: 88 | Level Of Service: D

Street Name:	Madison St						Indiana Ave					
Approach:	North Bound			South Bound			East Bound			West Bound		
Movement:	L -	T -	R	L -	T -	R	L -	T -	R	L -	T -	R
Control:	Protected			Protected			Protected			Protected		
Rights:	Include			Include			Include			Include		
Min. Green:	7	7	7	7	7	7	7	7	7	7	7	7
Lanes:	1 0	1 1	0	1 0	1 1	0	1 0	1 1	0	1 0	1 1	0
Volume Module:												
Base Vol:	36	499	26	314	286	133	154	458	26	13	161	435
Growth Adj:	1.00	1.00	1.00	1.00	1.00	1.00	1.00	1.00	1.00	1.00	1.00	1.00
Initial Bse:	36	499	26	314	286	133	154	458	26	13	161	435
Added Vol:	0	0	0	0	0	0	0	0	0	0	0	0
PasserByVol:	0	0	0	0	0	0	0	0	0	0	0	0
Initial Fut:	36	499	26	314	286	133	154	458	26	13	161	435
User Adj:	1.00	1.00	1.00	1.00	1.00	1.00	1.00	1.00	1.00	1.00	1.00	1.00
PHF Adj:	1.00	1.00	1.00	1.00	1.00	1.00	1.00	1.00	1.00	1.00	1.00	1.00
PHF Volume:	36	499	26	314	286	133	154	458	26	13	161	435
Reduct Vol:	0	0	0	0	0	0	0	0	0	0	0	0
Reduced Vol:	36	499	26	314	286	133	154	458	26	13	161	435
PCE Adj:	1.00	1.00	1.00	1.00	1.00	1.00	1.00	1.00	1.00	1.00	1.00	1.00
MLF Adj:	1.00	1.00	1.00	1.00	1.00	1.00	1.00	1.00	1.00	1.00	1.00	1.00
FinalVolume:	36	499	26	314	286	133	154	458	26	13	161	435
Saturation Flow Module:												
Sat/Lane:	1900	1900	1900	1900	1900	1900	1900	1900	1900	1900	1900	1900
Adjustment:	0.95	0.94	0.94	0.95	0.90	0.90	0.95	0.94	0.94	0.95	0.85	0.85
Lanes:	1.00	1.90	0.10	1.00	1.37	0.63	1.00	1.89	0.11	1.00	1.00	1.00
Final Sat.:	1805	3407	178	1805	2346	1091	1805	3389	192	1805	1608	1608
Capacity Analysis Module:												
Vol/Sat:	0.02	0.15	0.15	0.17	0.12	0.12	0.09	0.14	0.14	0.01	0.10	0.27
Crit Moves:		****		****			****					****
Green/Cycle:	0.15	0.18	0.18	0.22	0.25	0.25	0.11	0.29	0.29	0.15	0.34	0.34
Volume/Cap:	0.14	0.81	0.81	0.81	0.48	0.48	0.81	0.46	0.46	0.05	0.30	0.81
Delay/Veh:	37.5	46.4	46.4	48.8	32.2	32.2	65.2	29.4	29.4	36.4	24.6	36.7
User DelAdj:	1.00	1.00	1.00	1.00	1.00	1.00	1.00	1.00	1.00	1.00	1.00	1.00
AdjDel/Veh:	37.5	46.4	46.4	48.8	32.2	32.2	65.2	29.4	29.4	36.4	24.6	36.7
LOS by Move:	D	D	D	D	C	C	E	C	C	D	C	D
HCM2kAvgQ:	1	10	10	11	6	6	7	7	7	0	4	15

Note: Queue reported is the number of cars per lane.

Traffix 7.9.0415 (c) 2007 Dowling Assoc. Licensed to MMA, LONG BEACH, CA

Overlook Parkway Extension
Ex Open + Alt3
AM Peak Hour

Level Of Service Computation Report
2000 HCM Operations Method (Future Volume Alternative)

Intersection #4 Madison St/Lincoln Ave

Cycle (sec): 100 | Critical Vol./Cap.(X): 0.346
Loss Time (sec): 16 (Y+R=4.0 sec) | Average Delay (sec/veh): 30.5
Optimal Cycle: 50 | Level Of Service: C

Street Name:	Madison St						Lincoln Ave					
Approach:	North Bound			South Bound			East Bound			West Bound		
Movement:	L -	T -	R	L -	T -	R	L -	T -	R	L -	T -	R
Control:	Protected			Protected			Protected			Protected		
Rights:	Include			Include			Include			Include		
Min. Green:	7	7	7	7	7	7	7	7	7	7	7	7
Lanes:	1 0	0 1	0	1 0	0 1	0	1 0	0 1	0	1 0	1 1	0
Volume Module:												
Base Vol:	24	256	6	59	70	89	91	213	8	5	175	103
Growth Adj:	1.00	1.00	1.00	1.00	1.00	1.00	1.00	1.00	1.00	1.00	1.00	1.00
Initial Bse:	24	256	6	59	70	89	91	213	8	5	175	103
Added Vol:	0	0	0	0	0	0	0	0	0	0	0	0
PasserByVol:	0	0	0	0	0	0	0	0	0	0	0	0
Initial Fut:	24	256	6	59	70	89	91	213	8	5	175	103
User Adj:	1.00	1.00	1.00	1.00	1.00	1.00	1.00	1.00	1.00	1.00	1.00	1.00
PHF Adj:	1.00	1.00	1.00	1.00	1.00	1.00	1.00	1.00	1.00	1.00	1.00	1.00
PHF Volume:	24	256	6	59	70	89	91	213	8	5	175	103
Reduct Vol:	0	0	0	0	0	0	0	0	0	0	0	0
Reduced Vol:	24	256	6	59	70	89	91	213	8	5	175	103
PCE Adj:	1.00	1.00	1.00	1.00	1.00	1.00	1.00	1.00	1.00	1.00	1.00	1.00
MLF Adj:	1.00	1.00	1.00	1.00	1.00	1.00	1.00	1.00	1.00	1.00	1.00	1.00
FinalVolume:	24	256	6	59	70	89	91	213	8	5	175	103
Saturation Flow Module:												
Sat/Lane:	1900	1900	1900	1900	1900	1900	1900	1900	1900	1900	1900	1900
Adjustment:	0.95	1.00	1.00	0.95	0.92	0.92	0.95	1.00	1.00	0.95	0.90	0.90
Lanes:	1.00	0.98	0.02	1.00	0.44	0.56	1.00	0.96	0.04	1.00	1.26	0.74
Final Sat.:	1805	1851	43	1805	766	974	1805	1822	68	1805	2145	1263
Capacity Analysis Module:												
Vol/Sat:	0.01	0.14	0.14	0.03	0.09	0.09	0.05	0.12	0.12	0.00	0.08	0.08
Crit Moves:		****		****				****		****		
Green/Cycle:	0.20	0.37	0.37	0.09	0.26	0.26	0.18	0.31	0.31	0.07	0.21	0.21
Volume/Cap:	0.07	0.37	0.37	0.37	0.35	0.35	0.29	0.37	0.37	0.04	0.40	0.40
Delay/Veh:	32.6	23.4	23.4	44.5	30.7	30.7	36.2	27.1	27.1	43.5	34.7	34.7
User DelAdj:	1.00	1.00	1.00	1.00	1.00	1.00	1.00	1.00	1.00	1.00	1.00	1.00
AdjDel/Veh:	32.6	23.4	23.4	44.5	30.7	30.7	36.2	27.1	27.1	43.5	34.7	34.7
LOS by Move:	C	C	C	D	C	C	D	C	C	D	C	C
HCM2kAvgQ:	1	6	6	2	4	4	3	5	5	0	4	4

Note: Queue reported is the number of cars per lane.

Traffix 7.9.0415 (c) 2007 Dowling Assoc. Licensed to MMA, LONG BEACH, CA

Overlook Parkway Extension
Ex Open + Alt3
AM Peak Hour

Level Of Service Computation Report
2000 HCM Operations Method (Future Volume Alternative)

Intersection #6 Washington St/Indiana Ave

Cycle (sec):	100	Critical Vol./Cap.(X):	0.557
Loss Time (sec):	12 (Y+R=4.0 sec)	Average Delay (sec/veh):	24.9
Optimal Cycle:	50	Level Of Service:	C

Street Name:	Washington St						Indiana Ave					
Approach:	North Bound			South Bound			East Bound			West Bound		
Movement:	L - T - R			L - T - R			L - T - R			L - T - R		
Control:	Permitted			Permitted			Protected			Protected		
Rights:	Ovl			Include			Include			Include		
Min. Green:	7	7	7	7	7	7	7	7	7	7	7	7
Lanes:	1 0	0 1	0	1 0	0 1	0	1 0	1 1	0	1 0	1 1	0
Volume Module:												
Base Vol:	325	5	273	3	0	2	10	703	88	80	325	9
Growth Adj:	1.00	1.00	1.00	1.00	1.00	1.00	1.00	1.00	1.00	1.00	1.00	1.00
Initial Bse:	325	5	273	3	0	2	10	703	88	80	325	9
Added Vol:	0	0	0	0	0	0	0	0	0	0	0	0
PasserByVol:	0	0	0	0	0	0	0	0	0	0	0	0
Initial Fut:	325	5	273	3	0	2	10	703	88	80	325	9
User Adj:	1.00	1.00	1.00	1.00	1.00	1.00	1.00	1.00	1.00	1.00	1.00	1.00
PHF Adj:	1.00	1.00	1.00	1.00	1.00	1.00	1.00	1.00	1.00	1.00	1.00	1.00
PHF Volume:	325	5	273	3	0	2	10	703	88	80	325	9
Reduct Vol:	0	0	0	0	0	0	0	0	0	0	0	0
Reduced Vol:	325	5	273	3	0	2	10	703	88	80	325	9
PCE Adj:	1.00	1.00	1.00	1.00	1.00	1.00	1.00	1.00	1.00	1.00	1.00	1.00
MLF Adj:	1.00	1.00	1.00	1.00	1.00	1.00	1.00	1.00	1.00	1.00	1.00	1.00
FinalVolume:	325	5	273	3	0	2	10	703	88	80	325	9
Saturation Flow Module:												
Sat/Lane:	1900	1900	1900	1900	1900	1900	1900	1900	1900	1900	1900	1900
Adjustment:	0.77	0.85	0.85	0.48	1.00	0.85	0.95	0.93	0.93	0.95	0.95	0.95
Lanes:	1.00	0.02	0.98	1.00	0.00	1.00	1.00	1.78	0.22	1.00	1.95	0.05
Final Sat.:	1457	29	1592	914	0	1615	1805	3154	395	1805	3499	97
Capacity Analysis Module:												
Vol/Sat:	0.22	0.17	0.17	0.00	0.00	0.00	0.01	0.22	0.22	0.04	0.09	0.09
Crit Moves:	****							****		****		
Green/Cycle:	0.40	0.40	0.48	0.40	0.00	0.40	0.21	0.40	0.40	0.08	0.27	0.27
Volume/Cap:	0.56	0.43	0.36	0.01	0.00	0.00	0.03	0.56	0.56	0.56	0.34	0.34
Delay/Veh:	24.3	22.2	16.6	18.0	0.0	18.0	31.7	23.6	23.6	49.1	29.3	29.3
User DelAdj:	1.00	1.00	1.00	1.00	1.00	1.00	1.00	1.00	1.00	1.00	1.00	1.00
AdjDel/Veh:	24.3	22.2	16.6	18.0	0.0	18.0	31.7	23.6	23.6	49.1	29.3	29.3
LOS by Move:	C	C	B	B	A	B	C	C	C	D	C	C
HCM2kAvgQ:	8	6	5	0	0	0	0	10	10	3	4	4

Note: Queue reported is the number of cars per lane.

Traffix 7.9.0415 (c) 2007 Dowling Assoc. Licensed to MMA, LONG BEACH, CA

Overlook Parkway Extension
Ex Open + Alt3
AM Peak Hour

Level Of Service Computation Report
2000 HCM 4-Way Stop Method (Future Volume Alternative)

Intersection #7 Washington St/Lincoln Ave

Cycle (sec):	100	Critical Vol./Cap.(X):	0.871
Loss Time (sec):	0 (Y+R=4.0 sec)	Average Delay (sec/veh):	22.9
Optimal Cycle:	0	Level Of Service:	C

Street Name:	Washington St						Lincoln Ave					
Approach:	North Bound			South Bound			East Bound			West Bound		
Movement:	L - T - R			L - T - R			L - T - R			L - T - R		
Control:	Stop Sign			Stop Sign			Stop Sign			Stop Sign		
Rights:	Include			Include			Include			Include		
Min. Green:	7	7	7	7	7	7	7	7	7	7	7	7
Lanes:	0 0	1! 0	0	0 0	1! 0	0	0 0	1! 0	0	0 1	0 0	1
Volume Module:												
Base Vol:	33	473	10	39	125	31	34	237	12	10	179	65
Growth Adj:	1.00	1.00	1.00	1.00	1.00	1.00	1.00	1.00	1.00	1.00	1.00	1.00
Initial Bse:	33	473	10	39	125	31	34	237	12	10	179	65
Added Vol:	0	0	0	0	0	0	0	0	0	0	0	0
PasserByVol:	0	0	0	0	0	0	0	0	0	0	0	0
Initial Fut:	33	473	10	39	125	31	34	237	12	10	179	65
User Adj:	1.00	1.00	1.00	1.00	1.00	1.00	1.00	1.00	1.00	1.00	1.00	1.00
PHF Adj:	1.00	1.00	1.00	1.00	1.00	1.00	1.00	1.00	1.00	1.00	1.00	1.00
PHF Volume:	33	473	10	39	125	31	34	237	12	10	179	65
Reduct Vol:	0	0	0	0	0	0	0	0	0	0	0	0
Reduced Vol:	33	473	10	39	125	31	34	237	12	10	179	65
PCE Adj:	1.00	1.00	1.00	1.00	1.00	1.00	1.00	1.00	1.00	1.00	1.00	1.00
MLF Adj:	1.00	1.00	1.00	1.00	1.00	1.00	1.00	1.00	1.00	1.00	1.00	1.00
FinalVolume:	33	473	10	39	125	31	34	237	12	10	179	65
Saturation Flow Module:												
Adjustment:	1.00	1.00	1.00	1.00	1.00	1.00	1.00	1.00	1.00	1.00	1.00	1.00
Lanes:	0.06	0.92	0.02	0.20	0.64	0.16	0.12	0.84	0.04	0.05	0.95	1.00
Final Sat.:	38	543	11	100	320	79	61	423	21	25	440	512
Capacity Analysis Module:												
Vol/Sat:	0.87	0.87	0.87	0.39	0.39	0.39	0.56	0.56	0.56	0.41	0.41	0.13
Crit Moves:		****			****		****				****	
Delay/Veh:	34.7	34.7	34.7	13.2	13.2	13.2	16.7	16.7	16.7	14.2	14.2	10.0
Delay Adj:	1.00	1.00	1.00	1.00	1.00	1.00	1.00	1.00	1.00	1.00	1.00	1.00
AdjDel/Veh:	34.7	34.7	34.7	13.2	13.2	13.2	16.7	16.7	16.7	14.2	14.2	10.0
LOS by Move:	D	D	D	B	B	B	C	C	C	B	B	B
ApproachDel:	34.7			13.2			16.7			13.1		
Delay Adj:	1.00			1.00			1.00			1.00		
ApprAdjDel:	34.7			13.2			16.7			13.1		
LOS by Appr:	D			B			C			B		
AllWayAvgQ:	4.2	4.2	4.2	0.5	0.5	0.5	1.0	1.0	1.0	0.6	0.6	0.1

Traffix 7.9.0415 (c) 2007 Dowling Assoc. Licensed to MMA, LONG BEACH, CA

Overlook Parkway Extension
Ex Open + Alt3
AM Peak Hour

Note: Queue reported is the number of cars per lane.

Overlook Parkway Extension
Ex Open + Alt3
AM Peak Hour

Level Of Service Computation Report
2000 HCM Operations Method (Future Volume Alternative)

Intersection #9 Washington St/Overlook Pkwy

Cycle (sec):	100	Critical Vol./Cap.(X):	0.659
Loss Time (sec):	12 (Y+R=4.0 sec)	Average Delay (sec/veh):	27.4
Optimal Cycle:	54	Level Of Service:	C

Street Name:	Washington St						Overlook Pkwy					
Approach:	North Bound			South Bound			East Bound			West Bound		
Movement:	L - T - R			L - T - R			L - T - R			L - T - R		
Control:	Protected			Protected			Protected			Protected		
Rights:	Include			Include			Include			Ovl		
Min. Green:	7	7	7	7	7	7	7	7	7	7	7	7
Lanes:	0 0	1 1	0	1 0	2 0	0	0 0	0 0	0	1 0	0 0	1
Volume Module:												
Base Vol:	0	781	20	249	207	0	0	0	0	22	0	577
Growth Adj:	1.00	1.00	1.00	1.00	1.00	1.00	1.00	1.00	1.00	1.00	1.00	1.00
Initial Bse:	0	781	20	249	207	0	0	0	0	22	0	577
Added Vol:	0	0	0	0	0	0	0	0	0	0	0	0
PasserByVol:	0	0	0	0	0	0	0	0	0	0	0	0
Initial Fut:	0	781	20	249	207	0	0	0	0	22	0	577
User Adj:	1.00	1.00	1.00	1.00	1.00	1.00	1.00	1.00	1.00	1.00	1.00	1.00
PHF Adj:	1.00	1.00	1.00	1.00	1.00	1.00	1.00	1.00	1.00	1.00	1.00	1.00
PHF Volume:	0	781	20	249	207	0	0	0	0	22	0	577
Reduct Vol:	0	0	0	0	0	0	0	0	0	0	0	0
Reduced Vol:	0	781	20	249	207	0	0	0	0	22	0	577
PCE Adj:	1.00	1.00	1.00	1.00	1.00	1.00	1.00	1.00	1.00	1.00	1.00	1.00
MLF Adj:	1.00	1.00	1.00	1.00	1.00	1.00	1.00	1.00	1.00	1.00	1.00	1.00
FinalVolume:	0	781	20	249	207	0	0	0	0	22	0	577
Saturation Flow Module:												
Sat/Lane:	1900	1900	1900	1900	1900	1900	1900	1900	1900	1900	1900	1900
Adjustment:	1.00	0.95	0.95	0.95	0.95	1.00	1.00	1.00	1.00	0.95	1.00	0.85
Lanes:	0.00	1.95	0.05	1.00	2.00	0.00	0.00	0.00	0.00	1.00	0.00	1.00
Final Sat.:	0	3506	90	1805	3610	0	0	0	0	1805	0	1615
Capacity Analysis Module:												
Vol/Sat:	0.00	0.22	0.22	0.14	0.06	0.00	0.00	0.00	0.00	0.01	0.00	0.36
Crit Moves:		****		****								****
Green/Cycle:	0.00	0.34	0.34	0.21	0.27	0.00	0.00	0.00	0.00	0.20	0.00	0.54
Volume/Cap:	0.00	0.66	0.66	0.66	0.21	0.00	0.00	0.00	0.00	0.06	0.00	0.66
Delay/Veh:	0.0	29.5	29.5	40.5	28.1	0.0	0.0	0.0	0.0	32.4	0.0	18.2
User DelAdj:	1.00	1.00	1.00	1.00	1.00	1.00	1.00	1.00	1.00	1.00	1.00	1.00
AdjDel/Veh:	0.0	29.5	29.5	40.5	28.1	0.0	0.0	0.0	0.0	32.4	0.0	18.2
LOS by Move:	A	C	C	D	C	A	A	A	A	C	A	B
HCM2kAvgQ:	0	12	12	8	3	0	0	0	0	1	0	13

Note: Queue reported is the number of cars per lane.

Overlook Parkway Extension
Ex Open + Alt3
AM Peak Hour

Level Of Service Computation Report
2000 HCM Operations Method (Future Volume Alternative)

Intersection #10 Riverside Ave-SR-91 WB/Arlington Ave

Cycle (sec):	100	Critical Vol./Cap.(X):	0.815
Loss Time (sec):	12 (Y+R=4.0 sec)	Average Delay (sec/veh):	31.4
Optimal Cycle:	81	Level Of Service:	C

Street Name:	Riverside Ave-SR-91 WB						Arlington Ave					
Approach:	North Bound			South Bound			East Bound			West Bound		
Movement:	L -	T -	R	L -	T -	R	L -	T -	R	L -	T -	R
Control:	Protected			Protected			Protected			Protected		
Rights:	Include			Ovl			Ignore			Ignore		
Min. Green:	7	7	7	7	7	7	7	7	7	7	7	7
Lanes:	0 0	0 0	0	1 1	0 0	1	1 0	3 0	1	1 0	2 0	1
Volume Module:												
Base Vol:	0	0	0	475	46	515	78	798	141	520	953	276
Growth Adj:	1.00	1.00	1.00	1.00	1.00	1.00	1.00	1.00	1.00	1.00	1.00	1.00
Initial Bse:	0	0	0	475	46	515	78	798	141	520	953	276
Added Vol:	0	0	0	0	0	0	0	0	0	0	0	0
PasserByVol:	0	0	0	0	0	0	0	0	0	0	0	0
Initial Fut:	0	0	0	475	46	515	78	798	141	520	953	276
User Adj:	1.00	1.00	1.00	1.00	1.00	1.00	1.00	1.00	0.00	1.00	1.00	0.00
PHF Adj:	1.00	1.00	1.00	1.00	1.00	1.00	1.00	1.00	0.00	1.00	1.00	0.00
PHF Volume:	0	0	0	475	46	515	78	798	0	520	953	0
Reduct Vol:	0	0	0	0	0	0	0	0	0	0	0	0
Reduced Vol:	0	0	0	475	46	515	78	798	0	520	953	0
PCE Adj:	1.00	1.00	1.00	1.00	1.00	1.00	1.00	1.00	0.00	1.00	1.00	0.00
MLF Adj:	1.00	1.00	1.00	1.00	1.00	1.00	1.00	1.00	0.00	1.00	1.00	0.00
FinalVolume:	0	0	0	475	46	515	78	798	0	520	953	0
Saturation Flow Module:												
Sat/Lane:	1900	1900	1900	1900	1900	1900	1900	1900	1900	1900	1900	1900
Adjustment:	1.00	1.00	1.00	0.93	0.93	0.85	0.95	0.91	1.00	0.95	0.95	1.00
Lanes:	0.00	0.00	0.00	1.82	0.18	1.00	1.00	3.00	1.00	1.00	2.00	1.00
Final Sat.:	0	0	0	3225	312	1615	1805	5187	1900	1805	3610	1900
Capacity Analysis Module:												
Vol/Sat:	0.00	0.00	0.00	0.15	0.15	0.32	0.04	0.15	0.00	0.29	0.26	0.00
Crit Moves:						****		****		****		
Green/Cycle:	0.00	0.00	0.00	0.26	0.32	0.44	0.12	0.20	0.00	0.37	0.44	0.00
Volume/Cap:	0.00	0.00	0.00	0.56	0.46	0.73	0.37	0.79	0.00	0.79	0.59	0.00
Delay/Veh:	0.0	0.0	0.0	32.7	27.7	27.4	41.7	42.3	0.0	34.3	21.5	0.0
User DelAdj:	1.00	1.00	1.00	1.00	1.00	1.00	1.00	1.00	1.00	1.00	1.00	1.00
AdjDel/Veh:	0.0	0.0	0.0	32.7	27.7	27.4	41.7	42.3	0.0	34.3	21.5	0.0
LOS by Move:	A	A	A	C	C	C	D	D	A	C	C	A
HCM2kAvgQ:	0	0	0	7	7	14	3	11	0	16	12	0

Note: Queue reported is the number of cars per lane.

Traffix 7.9.0415 (c) 2007 Dowling Assoc. Licensed to MMA, LONG BEACH, CA

Overlook Parkway Extension
Ex Open + Alt3
AM Peak Hour

Level Of Service Computation Report
2000 HCM Operations Method (Future Volume Alternative)

Intersection #11 Indiana Ave-SR-91 EB/Arlington Ave

Cycle (sec):	100	Critical Vol./Cap.(X):	0.673
Loss Time (sec):	12 (Y+R=4.0 sec)	Average Delay (sec/veh):	26.0
Optimal Cycle:	56	Level Of Service:	C

Street Name:	Indiana Ave-SR-91 EB						Arlington Ave					
Approach:	North Bound			South Bound			East Bound			West Bound		
Movement:	L -	T -	R	L -	T -	R	L -	T -	R	L -	T -	R
Control:	Protected			Protected			Protected			Protected		
Rights:	Ovl			Include			Ovl			Ignore		
Min. Green:	7	7	7	7	7	7	7	7	7	7	7	7
Lanes:	1 1	1 0	1	0 0	0 0	0	1 0	2 0	1	1 0	4 0	1
Volume Module:												
Base Vol:	194	420	392	0	0	0	287	803	141	71	1591	402
Growth Adj:	1.00	1.00	1.00	1.00	1.00	1.00	1.00	1.00	1.00	1.00	1.00	1.00
Initial Bse:	194	420	392	0	0	0	287	803	141	71	1591	402
Added Vol:	0	0	0	0	0	0	0	0	0	0	0	0
PasserByVol:	0	0	0	0	0	0	0	0	0	0	0	0
Initial Fut:	194	420	392	0	0	0	287	803	141	71	1591	402
User Adj:	1.00	1.00	1.00	1.00	1.00	1.00	1.00	1.00	1.00	1.00	1.00	0.00
PHF Adj:	1.00	1.00	1.00	1.00	1.00	1.00	1.00	1.00	1.00	1.00	1.00	0.00
PHF Volume:	194	420	392	0	0	0	287	803	141	71	1591	0
Reduct Vol:	0	0	0	0	0	0	0	0	0	0	0	0
Reduced Vol:	194	420	392	0	0	0	287	803	141	71	1591	0
PCE Adj:	1.00	1.00	1.00	1.00	1.00	1.00	1.00	1.00	1.00	1.00	1.00	0.00
MLF Adj:	1.00	1.00	1.00	1.00	1.00	1.00	1.00	1.00	1.00	1.00	1.00	0.00
FinalVolume:	194	420	392	0	0	0	287	803	141	71	1591	0
Saturation Flow Module:												
Sat/Lane:	1900	1900	1900	1900	1900	1900	1900	1900	1900	1900	1900	1900
Adjustment:	0.92	0.92	0.85	1.00	1.00	1.00	0.95	0.95	0.85	0.95	0.91	1.00
Lanes:	1.00	2.00	1.00	0.00	0.00	0.00	1.00	2.00	1.00	1.00	4.00	1.00
Final Sat.:	1753	3505	1615	0	0	0	1805	3610	1615	1805	6916	1900
Capacity Analysis Module:												
Vol/Sat:	0.11	0.12	0.24	0.00	0.00	0.00	0.16	0.22	0.09	0.04	0.23	0.00
Crit Moves:			****				****				****	
Green/Cycle:	0.21	0.27	0.42	0.00	0.00	0.00	0.25	0.46	0.67	0.15	0.36	0.00
Volume/Cap:	0.53	0.44	0.58	0.00	0.00	0.00	0.64	0.48	0.13	0.27	0.64	0.00
Delay/Veh:	35.7	30.5	23.8	0.0	0.0	0.0	36.6	18.7	5.9	38.5	27.1	0.0
User DelAdj:	1.00	1.00	1.00	1.00	1.00	1.00	1.00	1.00	1.00	1.00	1.00	1.00
AdjDel/Veh:	35.7	30.5	23.8	0.0	0.0	0.0	36.6	18.7	5.9	38.5	27.1	0.0
LOS by Move:	D	C	C	A	A	A	D	B	A	D	C	A
HCM2kAvgQ:	6	6	10	0	0	0	9	9	2	2	12	0

Note: Queue reported is the number of cars per lane.

Traffix 7.9.0415 (c) 2007 Dowling Assoc. Licensed to MMA, LONG BEACH, CA

Overlook Parkway Extension
Ex Open + Alt3
AM Peak Hour

Level Of Service Computation Report
2000 HCM Operations Method (Future Volume Alternative)

Intersection #12 Victoria Ave/Arlington Ave

Cycle (sec):	100	Critical Vol./Cap.(X):	0.937
Loss Time (sec):	16 (Y+R=4.0 sec)	Average Delay (sec/veh):	42.7
Optimal Cycle:	130	Level Of Service:	D

Street Name:	Victoria Ave									Arlington Ave		
Approach:	North Bound			South Bound			East Bound			West Bound		
Movement:	L - T - R			L - T - R			L - T - R			L - T - R		
Control:	Protected			Protected			Protected			Protected		
Rights:	Ovl			Include			Include			Include		
Min. Green:	7	7	7	7	7	7	7	7	7	7	7	7
Lanes:	1 0	1 0	1	1 0	1 0	1	1 0	1 1	0	1 0	1 1	0
Volume Module:												
Base Vol:	31	415	345	131	244	154	157	733	5	255	1278	173
Growth Adj:	1.00	1.00	1.00	1.00	1.00	1.00	1.00	1.00	1.00	1.00	1.00	1.00
Initial Bse:	31	415	345	131	244	154	157	733	5	255	1278	173
Added Vol:	0	0	0	0	0	0	0	0	0	0	0	0
PasserByVol:	0	0	0	0	0	0	0	0	0	0	0	0
Initial Fut:	31	415	345	131	244	154	157	733	5	255	1278	173
User Adj:	1.00	1.00	1.00	1.00	1.00	1.00	1.00	1.00	1.00	1.00	1.00	1.00
PHF Adj:	1.00	1.00	1.00	1.00	1.00	1.00	1.00	1.00	1.00	1.00	1.00	1.00
PHF Volume:	31	415	345	131	244	154	157	733	5	255	1278	173
Reduct Vol:	0	0	0	0	0	0	0	0	0	0	0	0
Reduced Vol:	31	415	345	131	244	154	157	733	5	255	1278	173
PCE Adj:	1.00	1.00	1.00	1.00	1.00	1.00	1.00	1.00	1.00	1.00	1.00	1.00
MLF Adj:	1.00	1.00	1.00	1.00	1.00	1.00	1.00	1.00	1.00	1.00	1.00	1.00
FinalVolume:	31	415	345	131	244	154	157	733	5	255	1278	173
Saturation Flow Module:												
Sat/Lane:	1900	1900	1900	1900	1900	1900	1900	1900	1900	1900	1900	1900
Adjustment:	0.95	1.00	0.85	0.95	1.00	0.85	0.95	0.95	0.95	0.95	0.93	0.93
Lanes:	1.00	1.00	1.00	1.00	1.00	1.00	1.00	1.99	0.01	1.00	1.76	0.24
Final Sat.:	1805	1900	1615	1805	1900	1615	1805	3582	24	1805	3122	423
Capacity Analysis Module:												
Vol/Sat:	0.02	0.22	0.21	0.07	0.13	0.10	0.09	0.20	0.20	0.14	0.41	0.41
Crit Moves:		****		****			****				****	
Green/Cycle:	0.11	0.23	0.45	0.08	0.20	0.20	0.09	0.31	0.31	0.22	0.44	0.44
Volume/Cap:	0.16	0.94	0.48	0.94	0.64	0.47	0.94	0.65	0.65	0.65	0.94	0.94
Delay/Veh:	40.7	65.2	19.8	103.1	40.2	36.4	96.3	31.0	31.0	39.7	38.0	38.0
User DelAdj:	1.00	1.00	1.00	1.00	1.00	1.00	1.00	1.00	1.00	1.00	1.00	1.00
AdjDel/Veh:	40.7	65.2	19.8	103.1	40.2	36.4	96.3	31.0	31.0	39.7	38.0	38.0
LOS by Move:	D	E	B	F	D	D	F	C	C	D	D	D
HCM2kAvgQ:	1	17	8	7	8	5	8	11	11	8	27	27

Note: Queue reported is the number of cars per lane.

Traffix 7.9.0415 (c) 2007 Dowling Assoc. Licensed to MMA, LONG BEACH, CA

Overlook Parkway Extension
Ex Open + Alt3
AM Peak Hour

Level Of Service Computation Report
2000 HCM Operations Method (Future Volume Alternative)

Intersection #13 Alessandro Blvd/Arlington Ave

Cycle (sec):	100	Critical Vol./Cap.(X):	0.713
Loss Time (sec):	16 (Y+R=4.0 sec)	Average Delay (sec/veh):	28.4
Optimal Cycle:	71	Level Of Service:	C

Street Name:	Alessandro Blvd									Arlington Ave		
Approach:	North Bound			South Bound			East Bound			West Bound		
Movement:	L - T - R			L - T - R			L - T - R			L - T - R		
Control:	Protected			Protected			Protected			Protected		
Rights:	Ovl			Include			Ovl			Ovl		
Min. Green:	7	7	7	7	7	7	7	7	7	7	7	7
Lanes:	2 0	2 0	1	2 0	2 1	0	1 0	2 0	2	2 0	2 0	1
Volume Module:												
Base Vol:	1045	1278	382	230	358	30	29	540	541	103	508	237
Growth Adj:	1.00	1.00	1.00	1.00	1.00	1.00	1.00	1.00	1.00	1.00	1.00	1.00
Initial Bse:	1045	1278	382	230	358	30	29	540	541	103	508	237
Added Vol:	0	0	0	0	0	0	0	0	0	0	0	0
PasserByVol:	0	0	0	0	0	0	0	0	0	0	0	0
Initial Fut:	1045	1278	382	230	358	30	29	540	541	103	508	237
User Adj:	1.00	1.00	1.00	1.00	1.00	1.00	1.00	1.00	1.00	1.00	1.00	1.00
PHF Adj:	1.00	1.00	1.00	1.00	1.00	1.00	1.00	1.00	1.00	1.00	1.00	1.00
PHF Volume:	1045	1278	382	230	358	30	29	540	541	103	508	237
Reduct Vol:	0	0	0	0	0	0	0	0	0	0	0	0
Reduced Vol:	1045	1278	382	230	358	30	29	540	541	103	508	237
PCE Adj:	1.00	1.00	1.00	1.00	1.00	1.00	1.00	1.00	1.00	1.00	1.00	1.00
MLF Adj:	1.00	1.00	1.00	1.00	1.00	1.00	1.00	1.00	1.00	1.00	1.00	1.00
FinalVolume:	1045	1278	382	230	358	30	29	540	541	103	508	237
Saturation Flow Module:												
Sat/Lane:	1900	1900	1900	1900	1900	1900	1900	1900	1900	1900	1900	1900
Adjustment:	0.92	0.95	0.85	0.92	0.90	0.90	0.95	0.95	0.75	0.92	0.95	0.85
Lanes:	2.00	2.00	1.00	2.00	2.77	0.23	1.00	2.00	2.00	2.00	2.00	1.00
Final Sat.:	3502	3610	1615	3502	4729	396	1805	3610	2842	3502	3610	1615
Capacity Analysis Module:												
Vol/Sat:	0.30	0.35	0.24	0.07	0.08	0.08	0.02	0.15	0.19	0.03	0.14	0.15
Crit Moves:		****		****				****		****		
Green/Cycle:	0.45	0.48	0.55	0.09	0.11	0.11	0.09	0.20	0.66	0.07	0.18	0.27
Volume/Cap:	0.66	0.74	0.43	0.74	0.66	0.66	0.18	0.74	0.29	0.42	0.77	0.54
Delay/Veh:	22.4	22.8	13.7	53.5	45.1	45.1	42.6	41.4	7.4	45.7	44.7	32.6
User DelAdj:	1.00	1.00	1.00	1.00	1.00	1.00	1.00	1.00	1.00	1.00	1.00	1.00
AdjDel/Veh:	22.4	22.8	13.7	53.5	45.1	45.1	42.6	41.4	7.4	45.7	44.7	32.6
LOS by Move:	C	C	B	D	D	D	D	D	A	D	D	C
HCM2kAvgQ:	14	18	7	5	5	5	1	10	4	2	10	7

Note: Queue reported is the number of cars per lane.

Traffix 7.9.0415 (c) 2007 Dowling Assoc. Licensed to MMA, LONG BEACH, CA

Overlook Parkway Extension
Ex Open + Alt3
AM Peak Hour

Level Of Service Computation Report
2000 HCM Operations Method (Future Volume Alternative)

Intersection #14 Alessandro Blvd/Overlook Pkwy

Cycle (sec): 100 Critical Vol./Cap.(X): 0.805
Loss Time (sec): 16 (Y+R=4.0 sec) Average Delay (sec/veh): 28.4
Optimal Cycle: 88 Level Of Service: C

Street Name:	Alessandro Blvd						Overlook Pkwy					
Approach:	North Bound			South Bound			East Bound			West Bound		
Movement:	L -	T -	R	L -	T -	R	L -	T -	R	L -	T -	R
Control:	Protected			Protected			Protected			Protected		
Rights:	Include			Include			Include			Include		
Min. Green:	7	7	7	7	7	7	7	7	7	7	7	7
Lanes:	1 0	3 0	1	1 0	2 1	0	1 0	1 1	0	3 0	0 1	0
Volume Module:												
Base Vol:	331	2549	851	4	887	78	92	39	158	248	155	13
Growth Adj:	1.00	1.00	1.00	1.00	1.00	1.00	1.00	1.00	1.00	1.00	1.00	1.00
Initial Bse:	331	2549	851	4	887	78	92	39	158	248	155	13
Added Vol:	0	0	0	0	0	0	0	0	0	0	0	0
PasserByVol:	0	0	0	0	0	0	0	0	0	0	0	0
Initial Fut:	331	2549	851	4	887	78	92	39	158	248	155	13
User Adj:	1.00	1.00	1.00	1.00	1.00	1.00	1.00	1.00	1.00	1.00	1.00	1.00
PHF Adj:	1.00	1.00	1.00	1.00	1.00	1.00	1.00	1.00	1.00	1.00	1.00	1.00
PHF Volume:	331	2549	851	4	887	78	92	39	158	248	155	13
Reduct Vol:	0	0	0	0	0	0	0	0	0	0	0	0
Reduced Vol:	331	2549	851	4	887	78	92	39	158	248	155	13
PCE Adj:	1.00	1.00	1.00	1.00	1.00	1.00	1.00	1.00	1.00	1.00	1.00	1.00
MLF Adj:	1.00	1.00	1.00	1.00	1.00	1.00	1.00	1.00	1.00	1.00	1.00	1.00
FinalVolume:	331	2549	851	4	887	78	92	39	158	248	155	13
Saturation Flow Module:												
Sat/Lane:	1900	1900	1900	1900	1900	1900	1900	1900	1900	1900	1900	1900
Adjustment:	0.95	0.91	0.85	0.95	0.90	0.90	0.95	0.84	0.84	0.92	0.99	0.99
Lanes:	1.00	3.00	1.00	1.00	2.76	0.24	1.00	1.00	1.00	3.00	0.92	0.08
Final Sat.:	1805	5187	1615	1805	4711	414	1805	1588	1588	5253	1732	145
Capacity Analysis Module:												
Vol/Sat:	0.18	0.49	0.53	0.00	0.19	0.19	0.05	0.02	0.10	0.05	0.09	0.09
Crit Moves:			****	****					****	****		
Green/Cycle:	0.33	0.59	0.59	0.07	0.33	0.33	0.08	0.11	0.11	0.07	0.10	0.10
Volume/Cap:	0.56	0.83	0.89	0.03	0.56	0.56	0.64	0.22	0.89	0.67	0.88	0.88
Delay/Veh:	29.2	18.7	28.8	43.4	27.8	27.8	54.1	40.6	77.6	50.3	78.6	78.6
User DelAdj:	1.00	1.00	1.00	1.00	1.00	1.00	1.00	1.00	1.00	1.00	1.00	1.00
AdjDel/Veh:	29.2	18.7	28.8	43.4	27.8	27.8	54.1	40.6	77.6	50.3	78.6	78.6
LOS by Move:	C	B	C	D	C	C	D	D	E	D	E	E
HCM2kAvgQ:	9	25	26	0	9	9	4	1	8	4	8	8

Note: Queue reported is the number of cars per lane.

Traffix 7.9.0415 (c) 2007 Dowling Assoc. Licensed to MMA, LONG BEACH, CA

Overlook Parkway Extension
Ex Open + Alt3
AM Peak Hour

Level Of Service Computation Report
2000 HCM Operations Method (Future Volume Alternative)

Intersection #15 Alessandro Blvd/Trautwein Rd

Cycle (sec): 100 Critical Vol./Cap.(X): 0.841
Loss Time (sec): 12 (Y+R=4.0 sec) Average Delay (sec/veh): 33.3
Optimal Cycle: 88 Level Of Service: C

Street Name:	Alessandro Blvd						Trautwein Rd					
Approach:	North Bound			South Bound			East Bound			West Bound		
Movement:	L -	T -	R	L -	T -	R	L -	T -	R	L -	T -	R
Control:	Protected			Protected			Protected			Protected		
Rights:	Include			Ignore			Ignore			Include		
Min. Green:	7	7	7	7	7	7	7	7	7	7	7	7
Lanes:	2 0	3 0	0	0 0	3 0	1	3 0	0 0	1	0 0	0 0	0
Volume Module:												
Base Vol:	93	1980	0	0	826	518	1882	0	152	0	0	0
Growth Adj:	1.00	1.00	1.00	1.00	1.00	1.00	1.00	1.00	1.00	1.00	1.00	1.00
Initial Bse:	93	1980	0	0	826	518	1882	0	152	0	0	0
Added Vol:	0	0	0	0	0	0	0	0	0	0	0	0
PasserByVol:	0	0	0	0	0	0	0	0	0	0	0	0
Initial Fut:	93	1980	0	0	826	518	1882	0	152	0	0	0
User Adj:	1.00	1.00	1.00	1.00	1.00	0.00	1.00	1.00	0.00	1.00	1.00	1.00
PHF Adj:	1.00	1.00	1.00	1.00	1.00	0.00	1.00	1.00	0.00	1.00	1.00	1.00
PHF Volume:	93	1980	0	0	826	0	1882	0	0	0	0	0
Reduct Vol:	0	0	0	0	0	0	0	0	0	0	0	0
Reduced Vol:	93	1980	0	0	826	0	1882	0	0	0	0	0
PCE Adj:	1.00	1.00	1.00	1.00	1.00	0.00	1.00	1.00	0.00	1.00	1.00	1.00
MLF Adj:	1.00	1.00	1.00	1.00	1.00	0.00	1.00	1.00	0.00	1.00	1.00	1.00
FinalVolume:	93	1980	0	0	826	0	1882	0	0	0	0	0
Saturation Flow Module:												
Sat/Lane:	1900	1900	1900	1900	1900	1900	1900	1900	1900	1900	1900	1900
Adjustment:	0.92	0.91	1.00	1.00	0.91	1.00	0.92	1.00	1.00	1.00	1.00	1.00
Lanes:	2.00	3.00	0.00	0.00	3.00	1.00	3.00	0.00	1.00	0.00	0.00	0.00
Final Sat.:	3502	5187	0	0	5187	1900	5253	0	1900	0	0	0
Capacity Analysis Module:												
Vol/Sat:	0.03	0.38	0.00	0.00	0.16	0.00	0.36	0.00	0.00	0.00	0.00	0.00
Crit Moves:		****		****			****					
Green/Cycle:	0.15	0.42	0.00	0.00	0.34	0.00	0.39	0.00	0.00	0.00	0.00	0.00
Volume/Cap:	0.18	0.91	0.00	0.00	0.47	0.00	0.91	0.00	0.00	0.00	0.00	0.00
Delay/Veh:	37.4	33.9	0.0	0.0	26.2	0.0	35.6	0.0	0.0	0.0	0.0	0.0
User DelAdj:	1.00	1.00	1.00	1.00	1.00	1.00	1.00	1.00	1.00	1.00	1.00	1.00
AdjDel/Veh:	37.4	33.9	0.0	0.0	26.2	0.0	35.6	0.0	0.0	0.0	0.0	0.0
LOS by Move:	D	C	A	A	C	A	D	A	A	A	A	A
HCM2kAvgQ:	1	25	0	0	7	0	23	0	0	0	0	0

Note: Queue reported is the number of cars per lane.

Traffix 7.9.0415 (c) 2007 Dowling Assoc. Licensed to MMA, LONG BEACH, CA

Overlook Parkway Extension
Ex Open + Alt3
AM Peak Hour

Level Of Service Computation Report
2000 HCM 4-Way Stop Method (Future Volume Alternative)

Intersection #16 Crystal View Ter/Overlook Pkwy

Cycle (sec):	100	Critical Vol./Cap.(X):	0.395
Loss Time (sec):	0 (Y+R=4.0 sec)	Average Delay (sec/veh):	10.3
Optimal Cycle:	0	Level Of Service:	B

Street Name:	Crystal View Ter							Overlook Pkwy					
Approach:	North Bound			South Bound			East Bound			West Bound			
Movement:	L	- T	- R	L	- T	- R	L	- T	- R	L	- T	- R	
Control:	Stop Sign			Stop Sign			Stop Sign			Stop Sign			
Rights:	Include			Include			Include			Include			
Min. Green:	7	7	7	7	7	7	7	7	7	7	7	7	
Lanes:	0 0	1! 0	0	0 0	1! 0	0	1 0	1 1	0	1 0	1 1	0	
Volume Module:													
Base Vol:	69	0	27	0	0	0	0	254	46	10	557	0	
Growth Adj:	1.00	1.00	1.00	1.00	1.00	1.00	1.00	1.00	1.00	1.00	1.00	1.00	
Initial Bse:	69	0	27	0	0	0	0	254	46	10	557	0	
Added Vol:	0	0	0	0	0	0	0	0	0	0	0	0	
PasserByVol:	0	0	0	0	0	0	0	0	0	0	0	0	
Initial Fut:	69	0	27	0	0	0	0	254	46	10	557	0	
User Adj:	1.00	1.00	1.00	1.00	1.00	1.00	1.00	1.00	1.00	1.00	1.00	1.00	
PHF Adj:	1.00	1.00	1.00	1.00	1.00	1.00	1.00	1.00	1.00	1.00	1.00	1.00	
PHF Volume:	69	0	27	0	0	0	0	254	46	10	557	0	
Reduct Vol:	0	0	0	0	0	0	0	0	0	0	0	0	
Reduced Vol:	69	0	27	0	0	0	0	254	46	10	557	0	
PCE Adj:	1.00	1.00	1.00	1.00	1.00	1.00	1.00	1.00	1.00	1.00	1.00	1.00	
MLF Adj:	1.00	1.00	1.00	1.00	1.00	1.00	1.00	1.00	1.00	1.00	1.00	1.00	
FinalVolume:	69	0	27	0	0	0	0	254	46	10	557	0	
Saturation Flow Module:													
Adjustment:	1.00	1.00	1.00	1.00	1.00	1.00	1.00	1.00	1.00	1.00	1.00	1.00	
Lanes:	0.72	0.00	0.28	0.00	1.00	0.00	1.00	1.69	0.31	1.00	2.00	0.00	
Final Sat.:	433	0	169	0	565	0	605	1142	212	640	1409	0	
Capacity Analysis Module:													
Vol/Sat:	0.16	xxxx	0.16	xxxx	0.00	xxxx	0.00	0.22	0.22	0.02	0.40	xxxx	
Crit Moves:			****		****			****			****		
Delay/Veh:	9.6	0.0	9.6	0.0	0.0	0.0	0.0	9.4	9.2	8.3	10.9	0.0	
Delay Adj:	1.00	1.00	1.00	1.00	1.00	1.00	1.00	1.00	1.00	1.00	1.00	1.00	
AdjDel/Veh:	9.6	0.0	9.6	0.0	0.0	0.0	0.0	9.4	9.2	8.3	10.9	0.0	
LOS by Move:	A	*	A	*	*	*	*	A	A	A	B	*	
ApproachDel:	9.6			xxxxxx				9.3			10.9		
Delay Adj:	1.00			xxxxx				1.00			1.00		
ApprAdjDel:	9.6			xxxxxx				9.3			10.9		
LOS by Appr:	A			*				A			B		
AllWayAvgQ:	0.2	0.2	0.2	0.0	0.0	0.0	0.0	0.3	0.3	0.0	0.6	0.6	

Overlook Parkway Extension
Ex Open + Alt3
AM Peak Hour

Note: Queue reported is the number of cars per lane.

Overlook Parkway Extension
Ex Open + Alt3
AM Peak Hour

Level Of Service Computation Report
2000 HCM Unsignalized Method (Future Volume Alternative)

Intersection #17 Kingdom Dr/Overlook Pkwy

Average Delay (sec/veh): 1.0 Worst Case Level Of Service: C[17.7]

Street Name:	Kingdom Dr								Overlook Pkwy							
Approach:	North Bound				South Bound				East Bound				West Bound			
Movement:	L	-	T	-	R	L	-	T	-	R	L	-	T	-	R	L	-	T	-	R
Control:	Stop Sign					Stop Sign					Uncontrolled					Uncontrolled				
Rights:	Include					Include					Include					Include				
Lanes:	0	0	1!	0	0	1	0	0	0	0	1	0	1	1	0	1	0	1	1	0
Volume Module:																				
Base Vol:	16	0	35		4	0		0		0	254		14		34	552		0		
Growth Adj:	1.00	1.00	1.00		1.00	1.00		1.00		1.00	1.00		1.00		1.00	1.00		1.00		
Initial Bse:	16	0	35		4	0		0		0	254		14		34	552		0		
Added Vol:	0	0	0		0	0		0		0	0		0		0	0		0		
PasserByVol:	0	0	0		0	0		0		0	0		0		0	0		0		
Initial Fut:	16	0	35		4	0		0		0	254		14		34	552		0		
User Adj:	1.00	1.00	1.00		1.00	1.00		1.00		1.00	1.00		1.00		1.00	1.00		1.00		
PHF Adj:	1.00	1.00	1.00		1.00	1.00		1.00		1.00	1.00		1.00		1.00	1.00		1.00		
PHF Volume:	16	0	35		4	0		0		0	254		14		34	552		0		
Reduct Vol:	0	0	0		0	0		0		0	0		0		0	0		0		
FinalVolume:	16	0	35		4	0		0		0	254		14		34	552		0		
Critical Gap Module:																				
Critical Gp:	7.5	6.5	6.9		7.5	xxxx	xxxxx	xxxxx	xxxx	xxxxx	4.1	xxxx	xxxxx							
FollowUpTim:	3.5	4.0	3.3		3.5	xxxx	xxxxx	xxxxx	xxxx	xxxxx	2.2	xxxx	xxxxx							
Capacity Module:																				
Cnflict Vol:	605	881	134		747	xxxx	xxxxx	xxxx	xxxx	xxxxx	268	xxxx	xxxxx							
Potent Cap.:	386	288	897		305	xxxx	xxxxx	xxxx	xxxx	xxxxx	1307	xxxx	xxxxx							
Move Cap.:	378	280	897		287	xxxx	xxxxx	xxxx	xxxx	xxxxx	1307	xxxx	xxxxx							
Volume/Cap:	0.04	0.00	0.04		0.01	xxxx	xxxx	xxxx	xxxx	xxxx	0.03	xxxx	xxxx							
Level Of Service Module:																				
2Way95thQ:	xxxx	xxxx	xxxxx		0.0	xxxx	xxxxx	xxxx	xxxx	xxxxx	0.1	xxxx	xxxxx							
Control Del:	xxxxx	xxxx	xxxxx		17.7	xxxx	xxxxx	xxxxx	xxxx	xxxxx	7.8	xxxx	xxxxx							
LOS by Move:	*	*	*		C	*	*	*	*	*	A	*	*							
Movement:	LT -	LTR -	RT		LT -	LTR -	RT	LT -	LTR -	RT	LT -	LTR -	RT							
Shared Cap.:	xxxx	627	xxxxx		xxxx	xxxx	xxxxx	xxxx	xxxx	xxxxx	xxxx	xxxx	xxxxx							
SharedQueue:	xxxxx	0.3	xxxxx		xxxxx	xxxx	xxxxx	xxxxx	xxxx	xxxxx	xxxxx	xxxx	xxxxx							
Shrd ConDel:	xxxxx	11.3	xxxxx		xxxxx	xxxx	xxxxx	xxxxx	xxxx	xxxxx	xxxxx	xxxx	xxxxx							
Shared LOS:	*	B	*		*	*	*	*	*	*	*	*	*							
ApproachDel:	11.3				17.7			xxxxxx			xxxxxx									
ApproachLOS:	B				C			*			*									

Note: Queue reported is the number of cars per lane.

Overlook Parkway Extension
Ex Open + Alt3
AM Peak Hour

Level Of Service Computation Report
2000 HCM Unsignalized Method (Future Volume Alternative)

Intersection #18 Kingdom Dr/Green Orchard Pl

Average Delay (sec/veh): 1.5 Worst Case Level Of Service: A[8.7]

Street Name:	Kingdom Dr								Green Orchard Pl							
Approach:	North Bound				South Bound				East Bound				West Bound			
Movement:	L	-	T	-	R	L	-	T	-	R	L	-	T	-	R	L	-	T	-	R
Control:	Uncontrolled					Uncontrolled					Stop Sign					Stop Sign				
Rights:	Include					Include					Include					Include				
Lanes:	0	0	1	0	0	0	0	1	0	0	0	0	0	0	0	0	0	1!	0	0
Volume Module:																				
Base Vol:	0	38	0		0	31		0		0	0		0		6	0		9		
Growth Adj:	1.00	1.00	1.00		1.00	1.00		1.00		1.00	1.00		1.00		1.00	1.00		1.00		
Initial Bse:	0	38	0		0	31		0		0	0		0		6	0		9		
Added Vol:	0	0	0		0	0		0		0	0		0		0	0		0		
PasserByVol:	0	0	0		0	0		0		0	0		0		0	0		0		
Initial Fut:	0	38	0		0	31		0		0	0		0		6	0		9		
User Adj:	1.00	1.00	1.00		1.00	1.00		1.00		1.00	1.00		1.00		1.00	1.00		1.00		
PHF Adj:	1.00	1.00	1.00		1.00	1.00		1.00		1.00	1.00		1.00		1.00	1.00		1.00		
PHF Volume:	0	38	0		0	31		0		0	0		0		6	0		9		
Reduct Vol:	0	0	0		0	0		0		0	0		0		0	0		0		
FinalVolume:	0	38	0		0	31		0		0	0		0		6	0		9		
Critical Gap Module:																				
Critical Gp:	xxxxx	xxxx	xxxxx		xxxxx	xxxx	xxxxx	xxxxx	xxxx	xxxxx	6.4	6.5	6.2							
FollowUpTim:	xxxxx	xxxx	xxxxx		xxxxx	xxxx	xxxxx	xxxxx	xxxx	xxxxx	3.5	4.0	3.3							
Capacity Module:																				
Cnflict Vol:	xxxx	xxxx	xxxxx		xxxx	xxxx	xxxxx	xxxx	xxxx	xxxxx	69	69	38							
Potent Cap.:	xxxx	xxxx	xxxxx		xxxx	xxxx	xxxxx	xxxx	xxxx	xxxxx	941	825	1040							
Move Cap.:	xxxx	xxxx	xxxxx		xxxx	xxxx	xxxxx	xxxx	xxxx	xxxxx	941	825	1040							
Volume/Cap:	xxxx	xxxx	xxxx		xxxx	xxxx	xxxx	xxxx	xxxx	xxxx	0.01	0.00	0.01							
Level Of Service Module:																				
2Way95thQ:	xxxx	xxxx	xxxxx		xxxx	xxxx	xxxxx	xxxx	xxxx	xxxxx	xxxx	xxxx	xxxxx							
Control Del:	xxxxx	xxxx	xxxxx		xxxxx	xxxx	xxxxx	xxxxx	xxxx	xxxxx	xxxxx	xxxx	xxxxx							
LOS by Move:	*	*	*		*	*	*	*	*	*	*	*	*							
Movement:	LT -	LTR -	RT		LT -	LTR -	RT	LT -	LTR -	RT	LT -	LTR -	RT							
Shared Cap.:	xxxx	xxxx	xxxxx		xxxx	xxxx	xxxxx	xxxx	xxxx	xxxxx	xxxx	998	xxxxx							
SharedQueue:	xxxxx	xxxx	xxxxx		xxxxx	xxxx	xxxxx	xxxxx	xxxx	xxxxx	xxxxx	0.0	xxxxx							
Shrd ConDel:	xxxxx	xxxx	xxxxx		xxxxx	xxxx	xxxxx	xxxxx	xxxx	xxxxx	xxxxx	8.7	xxxxx							
Shared LOS:	*	*	*		*	*	*	*	*	*	*	A	*							
ApproachDel:	xxxxxx				xxxxxx			xxxxxx			8.7									
ApproachLOS:	*				*			*			A									

Note: Queue reported is the number of cars per lane.

Overlook Parkway Extension
Ex Open + Alt3
AM Peak Hour

Level Of Service Computation Report
2000 HCM Operations Method (Future Volume Alternative)

Intersection #19 Trautwein Rd/John F. Kennedy Dr

Cycle (sec):	100	Critical Vol./Cap.(X):	0.844
Loss Time (sec):	16 (Y+R=4.0 sec)	Average Delay (sec/veh):	32.6
Optimal Cycle:	98	Level Of Service:	C

Street Name:	Trautwein Rd						John F. Kennedy Dr					
Approach:	North Bound			South Bound			East Bound			West Bound		
Movement:	L -	T -	R	L -	T -	R	L -	T -	R	L -	T -	R
Control:	Protected			Protected			Protected			Protected		
Rights:	Include			Ovl			Include			Include		
Min. Green:	7	7	7	7	7	7	7	7	7	7	7	7
Lanes:	1 0	2 0	1	1 0	2 0	1	2 0	1 0	1	1 0	0 1	0
Volume Module:												
Base Vol:	67	1762	63	7	625	415	529	58	56	94	57	59
Growth Adj:	1.00	1.00	1.00	1.00	1.00	1.00	1.00	1.00	1.00	1.00	1.00	1.00
Initial Bse:	67	1762	63	7	625	415	529	58	56	94	57	59
Added Vol:	0	0	0	0	0	0	0	0	0	0	0	0
PasserByVol:	0	0	0	0	0	0	0	0	0	0	0	0
Initial Fut:	67	1762	63	7	625	415	529	58	56	94	57	59
User Adj:	1.00	1.00	1.00	1.00	1.00	1.00	1.00	1.00	1.00	1.00	1.00	1.00
PHF Adj:	1.00	1.00	1.00	1.00	1.00	1.00	1.00	1.00	1.00	1.00	1.00	1.00
PHF Volume:	67	1762	63	7	625	415	529	58	56	94	57	59
Reduct Vol:	0	0	0	0	0	0	0	0	0	0	0	0
Reduced Vol:	67	1762	63	7	625	415	529	58	56	94	57	59
PCE Adj:	1.00	1.00	1.00	1.00	1.00	1.00	1.00	1.00	1.00	1.00	1.00	1.00
MLF Adj:	1.00	1.00	1.00	1.00	1.00	1.00	1.00	1.00	1.00	1.00	1.00	1.00
FinalVolume:	67	1762	63	7	625	415	529	58	56	94	57	59
Saturation Flow Module:												
Sat/Lane:	1900	1900	1900	1900	1900	1900	1900	1900	1900	1900	1900	1900
Adjustment:	0.95	0.95	0.85	0.95	0.95	0.85	0.92	1.00	0.85	0.95	0.92	0.92
Lanes:	1.00	2.00	1.00	1.00	2.00	1.00	2.00	1.00	1.00	1.00	0.49	0.51
Final Sat.:	1805	3610	1615	1805	3610	1615	3502	1900	1615	1805	863	893
Capacity Analysis Module:												
Vol/Sat:	0.04	0.49	0.04	0.00	0.17	0.26	0.15	0.03	0.03	0.05	0.07	0.07
Crit Moves:		****		****			****				****	
Green/Cycle:	0.17	0.53	0.53	0.07	0.43	0.59	0.16	0.12	0.12	0.12	0.07	0.07
Volume/Cap:	0.21	0.92	0.07	0.06	0.40	0.43	0.92	0.26	0.29	0.44	0.92	0.92
Delay/Veh:	35.8	28.7	11.4	43.6	19.9	11.4	60.5	40.7	41.1	42.4	101	100.8
User DelAdj:	1.00	1.00	1.00	1.00	1.00	1.00	1.00	1.00	1.00	1.00	1.00	1.00
AdjDel/Veh:	35.8	28.7	11.4	43.6	19.9	11.4	60.5	40.7	41.1	42.4	101	100.8
LOS by Move:	D	C	B	D	B	B	E	D	D	D	F	F
HCM2kAvgQ:	2	30	1	0	7	7	12	2	2	3	6	6

Note: Queue reported is the number of cars per lane.

Traffix 7.9.0415 (c) 2007 Dowling Assoc. Licensed to MMA, LONG BEACH, CA

Overlook Parkway Extension
Ex Open + Alt3
AM Peak Hour

Level Of Service Computation Report
2000 HCM Operations Method (Future Volume Alternative)

Intersection #20 Washington St/Bradley St

Cycle (sec):	100	Critical Vol./Cap.(X):	0.572
Loss Time (sec):	12 (Y+R=4.0 sec)	Average Delay (sec/veh):	20.5
Optimal Cycle:	50	Level Of Service:	C

Street Name:	Washington St						Bradley St					
Approach:	North Bound			South Bound			East Bound			West Bound		
Movement:	L -	T -	R	L -	T -	R	L -	T -	R	L -	T -	R
Control:	Protected			Protected			Permitted			Permitted		
Rights:	Include			Include			Include			Include		
Min. Green:	7	7	7	7	7	7	7	7	7	7	7	7
Lanes:	1 0	1 0	1	1 0	0 1	0	0 0	1! 0	0	0 0	1! 0	0
Volume Module:												
Base Vol:	274	752	15	26	224	7	4	14	80	21	54	82
Growth Adj:	1.00	1.00	1.00	1.00	1.00	1.00	1.00	1.00	1.00	1.00	1.00	1.00
Initial Bse:	274	752	15	26	224	7	4	14	80	21	54	82
Added Vol:	0	0	0	0	0	0	0	0	0	0	0	0
PasserByVol:	0	0	0	0	0	0	0	0	0	0	0	0
Initial Fut:	274	752	15	26	224	7	4	14	80	21	54	82
User Adj:	1.00	1.00	1.00	1.00	1.00	1.00	1.00	1.00	1.00	1.00	1.00	1.00
PHF Adj:	1.00	1.00	1.00	1.00	1.00	1.00	1.00	1.00	1.00	1.00	1.00	1.00
PHF Volume:	274	752	15	26	224	7	4	14	80	21	54	82
Reduct Vol:	0	0	0	0	0	0	0	0	0	0	0	0
Reduced Vol:	274	752	15	26	224	7	4	14	80	21	54	82
PCE Adj:	1.00	1.00	1.00	1.00	1.00	1.00	1.00	1.00	1.00	1.00	1.00	1.00
MLF Adj:	1.00	1.00	1.00	1.00	1.00	1.00	1.00	1.00	1.00	1.00	1.00	1.00
FinalVolume:	274	752	15	26	224	7	4	14	80	21	54	82
Saturation Flow Module:												
Sat/Lane:	1900	1900	1900	1900	1900	1900	1900	1900	1900	1900	1900	1900
Adjustment:	0.95	1.00	0.85	0.95	1.00	1.00	0.88	0.88	0.88	0.89	0.89	0.89
Lanes:	1.00	1.00	1.00	1.00	0.97	0.03	0.04	0.14	0.82	0.13	0.34	0.53
Final Sat.:	1805	1900	1615	1805	1835	57	68	239	1365	225	579	880
Capacity Analysis Module:												
Vol/Sat:	0.15	0.40	0.01	0.01	0.12	0.12	0.06	0.06	0.06	0.09	0.09	0.09
Crit Moves:		****		****							****	
Green/Cycle:	0.40	0.66	0.66	0.07	0.32	0.32	0.15	0.15	0.15	0.15	0.15	0.15
Volume/Cap:	0.38	0.60	0.01	0.21	0.38	0.38	0.38	0.38	0.38	0.60	0.60	0.60
Delay/Veh:	21.4	10.7	6.0	44.7	26.5	26.5	38.9	38.9	38.9	43.4	43.4	43.4
User DelAdj:	1.00	1.00	1.00	1.00	1.00	1.00	1.00	1.00	1.00	1.00	1.00	1.00
AdjDel/Veh:	21.4	10.7	6.0	44.7	26.5	26.5	38.9	38.9	38.9	43.4	43.4	43.4
LOS by Move:	C	B	A	D	C	C	D	D	D	D	D	D
HCM2kAvgQ:	6	13	0	1	6	6	3	3	3	5	5	5

Note: Queue reported is the number of cars per lane.

Traffix 7.9.0415 (c) 2007 Dowling Assoc. Licensed to MMA, LONG BEACH, CA

Overlook Parkway Extension
Ex Open + Alt3
AM Peak Hour

Level Of Service Computation Report
2000 HCM Operations Method (Future Volume Alternative)

Intersection #21 Alessandro Blvd/Via Vista Dr

Cycle (sec):	100	Critical Vol./Cap.(X):	0.716
Loss Time (sec):	16 (Y+R=4.0 sec)	Average Delay (sec/veh):	19.2
Optimal Cycle:	71	Level Of Service:	B

Street Name:	Alessandro Blvd								Via Vista Dr					
Approach:	North Bound			South Bound			East Bound			West Bound				
Movement:	L	T	R	L	T	R	L	T	R	L	T	R		
Control:	Protected			Protected			Protected			Protected				
Rights:	Include			Include			Include			Include				
Min. Green:	7	7	7	7	7	7	7	7	7	7	7	7		
Lanes:	1 0	2 1	0	1 0	2 1	0	1 0	1 0	1	1 0	1 0	1		
Volume Module:														
Base Vol:	65	2510	12	18	949	33	107	48	64	24	35	74		
Growth Adj:	1.00	1.00	1.00	1.00	1.00	1.00	1.00	1.00	1.00	1.00	1.00	1.00		
Initial Bse:	65	2510	12	18	949	33	107	48	64	24	35	74		
Added Vol:	0	0	0	0	0	0	0	0	0	0	0	0		
PasserByVol:	0	0	0	0	0	0	0	0	0	0	0	0		
Initial Fut:	65	2510	12	18	949	33	107	48	64	24	35	74		
User Adj:	1.00	1.00	1.00	1.00	1.00	1.00	1.00	1.00	1.00	1.00	1.00	1.00		
PHF Adj:	1.00	1.00	1.00	1.00	1.00	1.00	1.00	1.00	1.00	1.00	1.00	1.00		
PHF Volume:	65	2510	12	18	949	33	107	48	64	24	35	74		
Reduct Vol:	0	0	0	0	0	0	0	0	0	0	0	0		
Reduced Vol:	65	2510	12	18	949	33	107	48	64	24	35	74		
PCE Adj:	1.00	1.00	1.00	1.00	1.00	1.00	1.00	1.00	1.00	1.00	1.00	1.00		
MLF Adj:	1.00	1.00	1.00	1.00	1.00	1.00	1.00	1.00	1.00	1.00	1.00	1.00		
FinalVolume:	65	2510	12	18	949	33	107	48	64	24	35	74		
Saturation Flow Module:														
Sat/Lane:	1900	1900	1900	1900	1900	1900	1900	1900	1900	1900	1900	1900		
Adjustment:	0.95	0.91	0.91	0.95	0.91	0.91	0.95	1.00	0.85	0.95	1.00	0.85		
Lanes:	1.00	2.99	0.01	1.00	2.90	0.10	1.00	1.00	1.00	1.00	1.00	1.00		
Final Sat.:	1805	5157	25	1805	4988	173	1805	1900	1615	1805	1900	1615		
Capacity Analysis Module:														
Vol/Sat:	0.04	0.49	0.49	0.01	0.19	0.19	0.06	0.03	0.04	0.01	0.02	0.05		
Crit Moves:		****		****			****					****		
Green/Cycle:	0.19	0.62	0.62	0.07	0.51	0.51	0.08	0.07	0.07	0.07	0.07	0.07		
Volume/Cap:	0.19	0.78	0.78	0.14	0.38	0.38	0.78	0.35	0.54	0.18	0.26	0.65		
Delay/Veh:	34.6	15.0	15.0	44.2	15.1	15.1	69.7	45.6	49.8	44.2	45.1	58.3		
User DelAdj:	1.00	1.00	1.00	1.00	1.00	1.00	1.00	1.00	1.00	1.00	1.00	1.00		
AdjDel/Veh:	34.6	15.0	15.0	44.2	15.1	15.1	69.7	45.6	49.8	44.2	45.1	58.3		
LOS by Move:	C	B	B	D	B	B	E	D	D	D	D	E		
HCM2kAvgQ:	2	22	22	1	7	7	5	2	3	1	1	3		

Note: Queue reported is the number of cars per lane.

Traffix 7.9.0415 (c) 2007 Dowling Assoc. Licensed to MMA, LONG BEACH, CA

Overlook Parkway Extension
Ex Open + Alt3
AM Peak Hour

Level Of Service Computation Report
2000 HCM 4-Way Stop Method (Future Volume Alternative)

Intersection #23 Mary St/Hawarden Dr

Cycle (sec):	100	Critical Vol./Cap.(X):	0.246
Loss Time (sec):	0 (Y+R=4.0 sec)	Average Delay (sec/veh):	8.4
Optimal Cycle:	0	Level Of Service:	A

Street Name:	Mary St								Hawarden Dr					
Approach:	North Bound			South Bound			East Bound			West Bound				
Movement:	L	T	R	L	T	R	L	T	R	L	T	R		
Control:	Stop Sign			Stop Sign			Stop Sign			Stop Sign				
Rights:	Include			Include			Include			Include				
Min. Green:	7	7	7	7	7	7	7	7	7	7	7	7		
Lanes:	0 1	0 0	0	0 0	0 1	0	0 0	1! 0	0	0 0	0 0	0		
Volume Module:														
Base Vol:	3	199	0	0	47	28	126	0	1	0	0	0		
Growth Adj:	1.00	1.00	1.00	1.00	1.00	1.00	1.00	1.00	1.00	1.00	1.00	1.00		
Initial Bse:	3	199	0	0	47	28	126	0	1	0	0	0		
Added Vol:	0	0	0	0	0	0	0	0	0	0	0	0		
PasserByVol:	0	0	0	0	0	0	0	0	0	0	0	0		
Initial Fut:	3	199	0	0	47	28	126	0	1	0	0	0		
User Adj:	1.00	1.00	1.00	1.00	1.00	1.00	1.00	1.00	1.00	1.00	1.00	1.00		
PHF Adj:	1.00	1.00	1.00	1.00	1.00	1.00	1.00	1.00	1.00	1.00	1.00	1.00		
PHF Volume:	3	199	0	0	47	28	126	0	1	0	0	0		
Reduct Vol:	0	0	0	0	0	0	0	0	0	0	0	0		
Reduced Vol:	3	199	0	0	47	28	126	0	1	0	0	0		
PCE Adj:	1.00	1.00	1.00	1.00	1.00	1.00	1.00	1.00	1.00	1.00	1.00	1.00		
MLF Adj:	1.00	1.00	1.00	1.00	1.00	1.00	1.00	1.00	1.00	1.00	1.00	1.00		
FinalVolume:	3	199	0	0	47	28	126	0	1	0	0	0		
Saturation Flow Module:														
Adjustment:	1.00	1.00	1.00	1.00	1.00	1.00	1.00	1.00	1.00	1.00	1.00	1.00		
Lanes:	0.01	0.99	0.00	0.00	0.63	0.37	0.99	0.00	0.01	0.00	0.00	0.00		
Final Sat.:	12	809	0	0	521	310	733	0	6	0	0	0		
Capacity Analysis Module:														
Vol/Sat:	0.25	0.25	xxxx	xxxx	0.09	0.09	0.17	xxxx	0.17	xxxx	xxxx	xxxx		
Crit Moves:	****				****		****							
Delay/Veh:	8.6	8.6	0.0	0.0	7.6	7.6	8.6	0.0	8.6	0.0	0.0	0.0		
Delay Adj:	1.00	1.00	1.00	1.00	1.00	1.00	1.00	1.00	1.00	1.00	1.00	1.00		
AdjDel/Veh:	8.6	8.6	0.0	0.0	7.6	7.6	8.6	0.0	8.6	0.0	0.0	0.0		
LOS by Move:	A	A	*	*	A	A	A	*	A	*	*	*		
ApproachDel:	8.6			7.6			8.6			xxxxxx				
Delay Adj:	1.00			1.00			1.00			xxxxx				
ApprAdjDel:	8.6			7.6			8.6			xxxxxx				
LOS by Appr:	A			A			A			*				
AllWayAvgQ:	0.3	0.3	0.3	0.1	0.1	0.1	0.2	0.2	0.2	0.0	0.0	0.0		

Traffix 7.9.0415 (c) 2007 Dowling Assoc. Licensed to MMA, LONG BEACH, CA

Overlook Parkway Extension
Ex Open + Alt3
AM Peak Hour

Note: Queue reported is the number of cars per lane.

Overlook Parkway Extension
Ex Open + Alt3
AM Peak Hour

Level Of Service Computation Report
2000 HCM 4-Way Stop Method (Future Volume Alternative)

Intersection #24 Hawarden Dr/Overlook Pkwy

Cycle (sec):	100	Critical Vol./Cap.(X):	0.394
Loss Time (sec):	0 (Y+R=4.0 sec)	Average Delay (sec/veh):	10.4
Optimal Cycle:	0	Level Of Service:	B

Street Name:	Hawarden Dr						Overlook Pkwy					
Approach:	North Bound			South Bound			East Bound			West Bound		
Movement:	L - T - R			L - T - R			L - T - R			L - T - R		
Control:	Stop Sign			Stop Sign			Stop Sign			Stop Sign		
Rights:	Include			Include			Include			Include		
Min. Green:	7	7	7	7	7	7	7	7	7	7	7	7
Lanes:	0 0	1! 0	0	0 0	1! 0	0	1 0	1 1	0	1 0	1 1	0
Volume Module:												
Base Vol:	62	56	6	12	7	14	17	197	31	1	503	39
Growth Adj:	1.00	1.00	1.00	1.00	1.00	1.00	1.00	1.00	1.00	1.00	1.00	1.00
Initial Bse:	62	56	6	12	7	14	17	197	31	1	503	39
Added Vol:	0	0	0	0	0	0	0	0	0	0	0	0
PasserByVol:	0	0	0	0	0	0	0	0	0	0	0	0
Initial Fut:	62	56	6	12	7	14	17	197	31	1	503	39
User Adj:	1.00	1.00	1.00	1.00	1.00	1.00	1.00	1.00	1.00	1.00	1.00	1.00
PHF Adj:	1.00	1.00	1.00	1.00	1.00	1.00	1.00	1.00	1.00	1.00	1.00	1.00
PHF Volume:	62	56	6	12	7	14	17	197	31	1	503	39
Reduct Vol:	0	0	0	0	0	0	0	0	0	0	0	0
Reduced Vol:	62	56	6	12	7	14	17	197	31	1	503	39
PCE Adj:	1.00	1.00	1.00	1.00	1.00	1.00	1.00	1.00	1.00	1.00	1.00	1.00
MLF Adj:	1.00	1.00	1.00	1.00	1.00	1.00	1.00	1.00	1.00	1.00	1.00	1.00
FinalVolume:	62	56	6	12	7	14	17	197	31	1	503	39
Saturation Flow Module:												
Adjustment:	1.00	1.00	1.00	1.00	1.00	1.00	1.00	1.00	1.00	1.00	1.00	1.00
Lanes:	0.50	0.45	0.05	0.36	0.21	0.43	1.00	1.73	0.27	1.00	1.86	0.14
Final Sat.:	299	270	29	214	125	250	583	1114	179	621	1277	100
Capacity Analysis Module:												
Vol/Sat:	0.21	0.21	0.21	0.06	0.06	0.06	0.03	0.18	0.17	0.00	0.39	0.39
Crit Moves:	****			****				****			****	
Delay/Veh:	10.0	10.0	10.0	8.9	8.9	8.9	8.9	9.2	9.1	8.4	11.1	10.9
Delay Adj:	1.00	1.00	1.00	1.00	1.00	1.00	1.00	1.00	1.00	1.00	1.00	1.00
AdjDel/Veh:	10.0	10.0	10.0	8.9	8.9	8.9	8.9	9.2	9.1	8.4	11.1	10.9
LOS by Move:	B	B	B	A	A	A	A	A	A	A	B	B
ApproachDel:	10.0			8.9			9.2			11.1		
Delay Adj:	1.00			1.00			1.00			1.00		
ApprAdjDel:	10.0			8.9			9.2			11.1		
LOS by Appr:	B			A			A			B		
AllWayAvgQ:	0.2	0.2	0.2	0.0	0.0	0.0	0.0	0.2	0.2	0.0	0.6	0.6

Overlook Parkway Extension
Ex Open + Alt3
AM Peak Hour

Note: Queue reported is the number of cars per lane.

Overlook Parkway Extension
Ex Open + Alt3
AM Peak Hour

Level Of Service Computation Report
2000 HCM 4-Way Stop Method (Future Volume Alternative)

Intersection #25 Crystal View Ter/Berry Rd

Cycle (sec):	100	Critical Vol./Cap.(X):	0.164
Loss Time (sec):	0 (Y+R=4.0 sec)	Average Delay (sec/veh):	7.5
Optimal Cycle:	0	Level Of Service:	A

Street Name:	Crystal View Ter									Berry Rd								
Approach:	North Bound				South Bound				East Bound				West Bound					
Movement:	L	-	T	-	R	L	-	T	-	R	L	-	T	-	R	L	-	T	-	R
Control:	Stop Sign					Stop Sign					Stop Sign					Stop Sign				
Rights:	Include					Include					Include					Include				
Min. Green:	7	7	7			7	7	7			7	7	7			7	7	7		
Lanes:	0	0	1!	0	0	0	1	0	0	0	0	0	0	0	1	0	0	1!	0	0
Volume Module:																				
Base Vol:	1	79	74			23	39	0			0	0	3			28	1	19		
Growth Adj:	1.00	1.00	1.00			1.00	1.00	1.00			1.00	1.00	1.00			1.00	1.00	1.00		
Initial Bse:	1	79	74			23	39	0			0	0	3			28	1	19		
Added Vol:	0	0	0			0	0	0			0	0	0			0	0	0		
PasserByVol:	0	0	0			0	0	0			0	0	0			0	0	0		
Initial Fut:	1	79	74			23	39	0			0	0	3			28	1	19		
User Adj:	1.00	1.00	1.00			1.00	1.00	1.00			1.00	1.00	1.00			1.00	1.00	1.00		
PHF Adj:	1.00	1.00	1.00			1.00	1.00	1.00			1.00	1.00	1.00			1.00	1.00	1.00		
PHF Volume:	1	79	74			23	39	0			0	0	3			28	1	19		
Reduct Vol:	0	0	0			0	0	0			0	0	0			0	0	0		
Reduced Vol:	1	79	74			23	39	0			0	0	3			28	1	19		
PCE Adj:	1.00	1.00	1.00			1.00	1.00	1.00			1.00	1.00	1.00			1.00	1.00	1.00		
MLF Adj:	1.00	1.00	1.00			1.00	1.00	1.00			1.00	1.00	1.00			1.00	1.00	1.00		
FinalVolume:	1	79	74			23	39	0			0	0	3			28	1	19		
Saturation Flow Module:																				
Adjustment:	1.00	1.00	1.00			1.00	1.00	1.00			1.00	1.00	1.00			1.00	1.00	1.00		
Lanes:	0.01	0.51	0.48			0.37	0.63	0.00			0.00	0.00	1.00			0.58	0.02	0.40		
Final Sat.:	6	482	452			312	529	0			0	0	902			477	17	324		
Capacity Analysis Module:																				
Vol/Sat:	0.16	0.16	0.16			0.07	0.07	xxxx			xxxx	xxxx	0.00			0.06	0.06	0.06		
Crit Moves:		****					****						****				****			
Delay/Veh:	7.5	7.5	7.5			7.5	7.5	0.0			0.0	0.0	6.8			7.5	7.5	7.5		
Delay Adj:	1.00	1.00	1.00			1.00	1.00	1.00			1.00	1.00	1.00			1.00	1.00	1.00		
AdjDel/Veh:	7.5	7.5	7.5			7.5	7.5	0.0			0.0	0.0	6.8			7.5	7.5	7.5		
LOS by Move:	A	A	A			A	A	*			*	*	A			A	A	A		
ApproachDel:	7.5					7.5					6.8					7.5				
Delay Adj:	1.00					1.00					1.00					1.00				
ApprAdjDel:	7.5					7.5					6.8					7.5				
LOS by Appr:	A					A					A					A				
AllWayAvgQ:	0.2	0.2	0.2			0.1	0.1	0.1			0.0	0.0	0.0			0.1	0.1	0.1		

Overlook Parkway Extension
Ex Open + Alt3
AM Peak Hour

Note: Queue reported is the number of cars per lane.

Overlook Parkway Extension
Ex Open + Alt3
AM Peak Hour

Level Of Service Computation Report
2000 HCM 4-Way Stop Method (Future Volume Alternative)

Intersection #26 Corinthian Wy/Berry Rd

Cycle (sec):	100	Critical Vol./Cap.(X):	0.118
Loss Time (sec):	0 (Y+R=4.0 sec)	Average Delay (sec/veh):	7.4
Optimal Cycle:	0	Level Of Service:	A

Street Name:	Corinthian Wy									Berry Rd							
Approach:	North Bound				South Bound				East Bound				West Bound				
Movement:	L	-	T	-	R	L	-	T	-	R	L	-	T	-	R	L	-	T	-	R
Control:	Stop Sign					Stop Sign					Stop Sign					Stop Sign				
Rights:	Include					Include					Include					Include				
Min. Green:	7	7	7			7	7	7			7	7	7			7	7	7		
Lanes:	0	0	0	0	0	0	0	0	0	1	0	1	0	0	0	0	0	0	1	0
Volume Module:																				
Base Vol:	0	0	0			0	0	0			17	98	3			0	28	34		
Growth Adj:	1.00	1.00	1.00			1.00	1.00	1.00			1.00	1.00	1.00			1.00	1.00	1.00		
Initial Bse:	0	0	0			0	0	0			17	98	3			0	28	34		
Added Vol:	0	0	0			0	0	0			0	0	0			0	0	0		
PasserByVol:	0	0	0			0	0	0			0	0	0			0	0	0		
Initial Fut:	0	0	0			0	0	0			17	98	3			0	28	34		
User Adj:	1.00	1.00	1.00			1.00	1.00	1.00			1.00	1.00	1.00			1.00	1.00	1.00		
PHF Adj:	1.00	1.00	1.00			1.00	1.00	1.00			1.00	1.00	1.00			1.00	1.00	1.00		
PHF Volume:	0	0	0			0	0	0			17	98	3			0	28	34		
Reduct Vol:	0	0	0			0	0	0			0	0	0			0	0	0		
Reduced Vol:	0	0	0			0	0	0			17	98	3			0	28	34		
PCE Adj:	1.00	1.00	1.00			1.00	1.00	1.00			1.00	1.00	1.00			1.00	1.00	1.00		
MLF Adj:	1.00	1.00	1.00			1.00	1.00	1.00			1.00	1.00	1.00			1.00	1.00	1.00		
FinalVolume:	0	0	0			0	0	0			17	98	3			0	28	34		
Saturation Flow Module:																				
Adjustment:	1.00	1.00	1.00			1.00	1.00	1.00			1.00	1.00	1.00			1.00	1.00	1.00		
Lanes:	0.00	0.00	0.00			0.00	0.00	0.00			1.00	0.97	0.03			0.00	0.45	0.55		
Final Sat.:	0	0	0			0	0	0			956	832	25			0	436	529		
Capacity Analysis Module:																				
Vol/Sat:	xxxx	xxxx	xxxx			xxxx	xxxx	xxxx			0.02	0.12	0.12			xxxx	xxxx	0.06	0.06	
Crit Moves:											****	****						****		
Delay/Veh:	0.0	0.0	0.0			0.0	0.0	0.0			6.7	7.7	7.7			0.0	0.0	6.9	6.9	
Delay Adj:	1.00	1.00	1.00			1.00	1.00	1.00			1.00	1.00	1.00			1.00	1.00	1.00		
AdjDel/Veh:	0.0	0.0	0.0			0.0	0.0	0.0			6.7	7.7	7.7			0.0	0.0	6.9	6.9	
LOS by Move:	*	*	*			*	*	*			A	A	A			*	*	A	A	
ApproachDel:	xxxxxx					6.7					7.7					6.9				
Delay Adj:	xxxxx					1.00					1.00					1.00				
ApprAdjDel:	xxxxxx					6.7					7.7					6.9				
LOS by Appr:	*					A					A					A				
AllWayAvgQ:	0.0	0.0	0.0			0.0	0.0	0.0			0.0	0.1	0.1			0.1	0.1	0.1	0.1	

Overlook Parkway Extension
Ex Open + Alt3
AM Peak Hour

Note: Queue reported is the number of cars per lane.

Traffix 7.9.0415 (c) 2007 Dowling Assoc. Licensed to MMA, LONG BEACH, CA

HCM Unsignalized Intersection Capacity Analysis
27: Madison St & Dufferin Ave

11/8/2011

Movement	EBL	EBR	SBL	SBR	NEL2	NEL	NET	SWT	SWR	SWR2
Lane Configurations										
Sign Control	Stop		Stop				Stop	Stop		
Volume (vph)	29	2	0	0	16	0	16	57	153	2
Peak Hour Factor	1.00	1.00	1.00	1.00	1.00	1.00	1.00	1.00	1.00	1.00
Hourly flow rate (vph)	29	2	0	0	16	0	16	57	153	2

Direction, Lane #	EB 1	SB 1	NE 1	SW 1
Volume Total (vph)	31	0	32	212
Volume Left (vph)	0	0	16	57
Volume Right (vph)	2	0	16	2
Hadj (s)	-0.02	0.00	-0.18	0.07
Departure Headway (s)	4.2	4.5	4.2	4.1
Degree Utilization, x	0.04	0.00	0.04	0.24
Capacity (veh/h)	847	772	796	874
Control Delay (s)	7.3	7.5	7.4	8.3
Approach Delay (s)	7.3	0.0	7.4	8.3
Approach LOS	A	A	A	A

Intersection Summary				
Delay		8.1		
HCM Level of Service		A		
Intersection Capacity Utilization		25.1%	ICU Level of Service	A
Analysis Period (min)		15		

Overlook Parkway Extension
Ex Open + Alt3
AM Peak Hour

Level Of Service Computation Report
2000 HCM Unsignalized Method (Future Volume Alternative)

Intersection #28 Orozco Dr/Overlook Pkwy

Average Delay (sec/veh): 0.9 Worst Case Level Of Service: C[16.3]

Street Name:	Orozco Dr						Overlook Pkwy					
Approach:	North Bound			South Bound			East Bound			West Bound		
Movement:	L - T - R			L - T - R			L - T - R			L - T - R		
Control:	Stop Sign			Stop Sign			Uncontrolled			Uncontrolled		
Rights:	Include			Include			Include			Include		
Lanes:	0 0 1! 0 0			0 0 1! 0 0			1 0 1 1 0			1 0 1 1 0		
Volume Module:												
Base Vol:	7	4	3	25	2	1	10	202	2	2	485	106
Growth Adj:	1.00	1.00	1.00	1.00	1.00	1.00	1.00	1.00	1.00	1.00	1.00	1.00
Initial Bse:	7	4	3	25	2	1	10	202	2	2	485	106
Added Vol:	0	0	0	0	0	0	0	0	0	0	0	0
PasserByVol:	0	0	0	0	0	0	0	0	0	0	0	0
Initial Fut:	7	4	3	25	2	1	10	202	2	2	485	106
User Adj:	1.00	1.00	1.00	1.00	1.00	1.00	1.00	1.00	1.00	1.00	1.00	1.00
PHF Adj:	1.00	1.00	1.00	1.00	1.00	1.00	1.00	1.00	1.00	1.00	1.00	1.00
PHF Volume:	7	4	3	25	2	1	10	202	2	2	485	106
Reduct Vol:	0	0	0	0	0	0	0	0	0	0	0	0
FinalVolume:	7	4	3	25	2	1	10	202	2	2	485	106
Critical Gap Module:												
Critical Gp:	7.5	6.5	6.9	7.5	6.5	6.9	4.1	xxxx	xxxxx	4.1	xxxx	xxxxx
FollowUpTim:	3.5	4.0	3.3	3.5	4.0	3.3	2.2	xxxx	xxxxx	2.2	xxxx	xxxxx
Capacity Module:												
Cnflict Vol:	471	818	102	665	766	296	591	xxxx	xxxxx	204	xxxx	xxxxx
Potent Cap.:	481	313	940	349	335	707	995	xxxx	xxxxx	1380	xxxx	xxxxx
Move Cap.:	474	309	940	342	331	707	995	xxxx	xxxxx	1380	xxxx	xxxxx
Volume/Cap:	0.01	0.01	0.00	0.07	0.01	0.00	0.01	xxxx	xxxx	0.00	xxxx	xxxx
Level Of Service Module:												
2Way95thQ:	xxxx	xxxx	xxxxx	xxxx	xxxx	xxxxx	0.0	xxxx	xxxxx	0.0	xxxx	xxxxx
Control Del:	xxxxx	xxxx	xxxxx	xxxxx	xxxx	xxxxx	8.7	xxxx	xxxxx	7.6	xxxx	xxxxx
LOS by Move:	*	*	*	*	*	*	A	*	*	A	*	*
Movement:	LT -	LTR -	RT	LT -	LTR -	RT	LT -	LTR -	RT	LT -	LTR -	RT
Shared Cap.:	xxxx	453	xxxxx	xxxx	348	xxxxx	xxxx	xxxx	xxxxx	xxxx	xxxx	xxxxx
SharedQueue:	xxxxx	0.1	xxxxx	xxxxx	0.3	xxxxx	xxxxx	xxxx	xxxxx	xxxxx	xxxx	xxxxx
Shrd ConDel:	xxxxx	13.2	xxxxx	xxxxx	16.3	xxxxx	xxxxx	xxxx	xxxxx	xxxxx	xxxx	xxxxx
Shared LOS:	*	B	*	*	C	*	*	*	*	*	*	*
ApproachDel:	13.2			16.3			xxxxxx			xxxxxx		
ApproachLOS:	B			C			*			*		

Note: Queue reported is the number of cars per lane.

Overlook Parkway Extension
Ex Open + Alt3
AM Peak Hour

Level Of Service Computation Report
2000 HCM 4-Way Stop Method (Future Volume Alternative)

Intersection #51 Madison St/Victoria Ave (North)

Cycle (sec): 100 Critical Vol./Cap.(X): 0.496
Loss Time (sec): 0 (Y+R=4.0 sec) Average Delay (sec/veh): 11.5
Optimal Cycle: 0 Level Of Service: B

Street Name:	Madison St						Victoria Ave (North)					
Approach:	North Bound			South Bound			East Bound			West Bound		
Movement:	L - T - R			L - T - R			L - T - R			L - T - R		
Control:	Stop Sign			Stop Sign			Stop Sign			Stop Sign		
Rights:	Include			Include			Include			Include		
Min. Green:	7	7	7	7	7	7	7	7	7	7	7	7
Lanes:	0 1 0 0 0			0 0 1 0 1			0 0 0 0 0			0 1 0 0 1		
Volume Module:												
Base Vol:	53	168	0	0	54	23	0	0	0	3	326	74
Growth Adj:	1.00	1.00	1.00	1.00	1.00	1.00	1.00	1.00	1.00	1.00	1.00	1.00
Initial Bse:	53	168	0	0	54	23	0	0	0	3	326	74
Added Vol:	0	0	0	0	0	0	0	0	0	0	0	0
PasserByVol:	0	0	0	0	0	0	0	0	0	0	0	0
Initial Fut:	53	168	0	0	54	23	0	0	0	3	326	74
User Adj:	1.00	1.00	1.00	1.00	1.00	1.00	1.00	1.00	1.00	1.00	1.00	1.00
PHF Adj:	1.00	1.00	1.00	1.00	1.00	1.00	1.00	1.00	1.00	1.00	1.00	1.00
PHF Volume:	53	168	0	0	54	23	0	0	0	3	326	74
Reduct Vol:	0	0	0	0	0	0	0	0	0	0	0	0
Reduced Vol:	53	168	0	0	54	23	0	0	0	3	326	74
PCE Adj:	1.00	1.00	1.00	1.00	1.00	1.00	1.00	1.00	1.00	1.00	1.00	1.00
MLF Adj:	1.00	1.00	1.00	1.00	1.00	1.00	1.00	1.00	1.00	1.00	1.00	1.00
FinalVolume:	53	168	0	0	54	23	0	0	0	3	326	74
Saturation Flow Module:												
Adjustment:	1.00	1.00	1.00	1.00	1.00	1.00	1.00	1.00	1.00	1.00	1.00	1.00
Lanes:	0.24	0.76	0.00	0.00	1.00	1.00	0.00	0.00	0.00	0.01	0.99	1.00
Final Sat.:	147	467	0	0	587	661	0	0	0	6	657	760
Capacity Analysis Module:												
Vol/Sat:	0.36	0.36	xxxx	xxxx	0.09	0.03	xxxx	xxxx	xxxx	0.50	0.50	0.10
Crit Moves:		****			****						****	
Delay/Veh:	11.6	11.6	0.0	0.0	9.0	8.0	0.0	0.0	0.0	12.9	12.9	7.8
Delay Adj:	1.00	1.00	1.00	1.00	1.00	1.00	1.00	1.00	1.00	1.00	1.00	1.00
AdjDel/Veh:	11.6	11.6	0.0	0.0	9.0	8.0	0.0	0.0	0.0	12.9	12.9	7.8
LOS by Move:	B	B	*	*	A	A	*	*	*	B	B	A
ApproachDel:	11.6			8.7			xxxxxx			12.0		
Delay Adj:	1.00			1.00			xxxxx			1.00		
ApprAdjDel:	11.6			8.7			xxxxxx			12.0		
LOS by Appr:	B			A			*			B		
AllWayAvgQ:	0.5	0.5	0.5	0.0	0.1	0.0	0.0	0.0	0.0	0.9	0.9	0.1

Overlook Parkway Extension
Ex Open + Alt3
AM Peak Hour

Note: Queue reported is the number of cars per lane.

Overlook Parkway Extension
Ex Open + Alt3
AM Peak Hour

Level Of Service Computation Report
2000 HCM 4-Way Stop Method (Future Volume Alternative)

Intersection #52 Madison St/Victoria Ave (South)

Cycle (sec): 100 | Critical Vol./Cap.(X): 0.477
Loss Time (sec): 0 (Y+R=4.0 sec) | Average Delay (sec/veh): 10.5
Optimal Cycle: 0 | Level Of Service: B

Street Name:	Madison St						Victoria Ave (South)					
Approach:	North Bound			South Bound			East Bound			West Bound		
Movement:	L	- T	- R	L	- T	- R	L	- T	- R	L	- T	- R
Control:	Stop Sign			Stop Sign			Stop Sign			Stop Sign		
Rights:	Include			Include			Include			Include		
Min. Green:	7	7	7	7	7	7	7	7	7	7	7	7
Lanes:	0 0	0 1	0	0 1	0 0	0	0 0	1! 0	0	0 0	0 0	0
Volume Module:												
Base Vol:	0	168	18	28	29	0	53	309	11	0	0	0
Growth Adj:	1.00	1.00	1.00	1.00	1.00	1.00	1.00	1.00	1.00	1.00	1.00	1.00
Initial Bse:	0	168	18	28	29	0	53	309	11	0	0	0
Added Vol:	0	0	0	0	0	0	0	0	0	0	0	0
PasserByVol:	0	0	0	0	0	0	0	0	0	0	0	0
Initial Fut:	0	168	18	28	29	0	53	309	11	0	0	0
User Adj:	1.00	1.00	1.00	1.00	1.00	1.00	1.00	1.00	1.00	1.00	1.00	1.00
PHF Adj:	1.00	1.00	1.00	1.00	1.00	1.00	1.00	1.00	1.00	1.00	1.00	1.00
PHF Volume:	0	168	18	28	29	0	53	309	11	0	0	0
Reduct Vol:	0	0	0	0	0	0	0	0	0	0	0	0
Reduced Vol:	0	168	18	28	29	0	53	309	11	0	0	0
PCE Adj:	1.00	1.00	1.00	1.00	1.00	1.00	1.00	1.00	1.00	1.00	1.00	1.00
MLF Adj:	1.00	1.00	1.00	1.00	1.00	1.00	1.00	1.00	1.00	1.00	1.00	1.00
FinalVolume:	0	168	18	28	29	0	53	309	11	0	0	0
Saturation Flow Module:												
Adjustment:	1.00	1.00	1.00	1.00	1.00	1.00	1.00	1.00	1.00	1.00	1.00	1.00
Lanes:	0.00	0.90	0.10	0.49	0.51	0.00	0.14	0.83	0.03	0.00	0.00	0.00
Final Sat.:	0	644	69	324	335	0	111	648	23	0	0	0
Capacity Analysis Module:												
Vol/Sat:	xxxx	0.26	0.26	0.09	0.09	xxxx	0.48	0.48	0.48	xxxx	xxxx	xxxx
Crit Moves:			****	****					****			
Delay/Veh:	0.0	9.3	9.3	8.5	8.5	0.0	11.3	11.3	11.3	0.0	0.0	0.0
Delay Adj:	1.00	1.00	1.00	1.00	1.00	1.00	1.00	1.00	1.00	1.00	1.00	1.00
AdjDel/Veh:	0.0	9.3	9.3	8.5	8.5	0.0	11.3	11.3	11.3	0.0	0.0	0.0
LOS by Move:	*	A	A	A	A	*	B	B	B	*	*	*
ApproachDel:		9.3			8.5			11.3			xxxxxx	
Delay Adj:		1.00			1.00			1.00			xxxxx	
ApprAdjDel:		9.3			8.5			11.3			xxxxxx	
LOS by Appr:		A			A			B			*	
AllWayAvgQ:	0.3	0.3	0.3	0.1	0.1	0.1	0.8	0.8	0.8	0.0	0.0	0.0

Overlook Parkway Extension
Ex Open + Alt3
AM Peak Hour

Note: Queue reported is the number of cars per lane.

Overlook Parkway Extension
Ex Open + Alt3
AM Peak Hour

Level Of Service Computation Report
2000 HCM 4-Way Stop Method (Future Volume Alternative)

Intersection #81 Washington St/Victoria Ave (North)

Cycle (sec):	100	Critical Vol./Cap.(X):	0.590
Loss Time (sec):	0 (Y+R=4.0 sec)	Average Delay (sec/veh):	14.3
Optimal Cycle:	0	Level Of Service:	B

Street Name:	Washington St								Victoria Ave (North)					
Approach:	North Bound			South Bound			East Bound			West Bound		
Movement:	L	- T	- R	L	- T	- R	L	- T	- R	L	- T	- R
Control:	Stop Sign			Stop Sign			Stop Sign			Stop Sign		
Rights:	Include			Include			Include			Include		
Min. Green:	7	7	7	7	7	7	7	7	7	7	7	7
Lanes:	0 1	1 0	0	0 0	0 1	0	0 0	0 0	0	1 0	0 1	0
Volume Module:												
Base Vol:	219	480	0	0	145	8	0	0	0	146	157	18
Growth Adj:	1.00	1.00	1.00	1.00	1.00	1.00	1.00	1.00	1.00	1.00	1.00	1.00
Initial Bse:	219	480	0	0	145	8	0	0	0	146	157	18
Added Vol:	0	0	0	0	0	0	0	0	0	0	0	0
PasserByVol:	0	0	0	0	0	0	0	0	0	0	0	0
Initial Fut:	219	480	0	0	145	8	0	0	0	146	157	18
User Adj:	1.00	1.00	1.00	1.00	1.00	1.00	1.00	1.00	1.00	1.00	1.00	1.00
PHF Adj:	1.00	1.00	1.00	1.00	1.00	1.00	1.00	1.00	1.00	1.00	1.00	1.00
PHF Volume:	219	480	0	0	145	8	0	0	0	146	157	18
Reduct Vol:	0	0	0	0	0	0	0	0	0	0	0	0
Reduced Vol:	219	480	0	0	145	8	0	0	0	146	157	18
PCE Adj:	1.00	1.00	1.00	1.00	1.00	1.00	1.00	1.00	1.00	1.00	1.00	1.00
MLF Adj:	1.00	1.00	1.00	1.00	1.00	1.00	1.00	1.00	1.00	1.00	1.00	1.00
FinalVolume:	219	480	0	0	145	8	0	0	0	146	157	18
Saturation Flow Module:												
Adjustment:	1.00	1.00	1.00	1.00	1.00	1.00	1.00	1.00	1.00	1.00	1.00	1.00
Lanes:	0.63	1.37	0.00	0.00	0.95	0.05	0.00	0.00	0.00	1.00	0.90	0.10
Final Sat.:	371	845	0	0	539	30	0	0	0	498	484	55
Capacity Analysis Module:												
Vol/Sat:	0.59	0.57	xxxx	xxxx	0.27	0.27	xxxx	xxxx	xxxx	0.29	0.32	0.32
Crit Moves:	****				****						****	
Delay/Veh:	16.8	15.6	0.0	0.0	11.4	11.4	0.0	0.0	0.0	12.4	12.0	12.0
Delay Adj:	1.00	1.00	1.00	1.00	1.00	1.00	1.00	1.00	1.00	1.00	1.00	1.00
AdjDel/Veh:	16.8	15.6	0.0	0.0	11.4	11.4	0.0	0.0	0.0	12.4	12.0	12.0
LOS by Move:	C	C	*	*	B	B	*	*	*	B	B	B
ApproachDel:	16.0			11.4			xxxxxx			12.2		
Delay Adj:	1.00			1.00			xxxxx			1.00		
ApprAdjDel:	16.0			11.4			xxxxxx			12.2		
LOS by Appr:	C			B			*			B		
AllWayAvgQ:	1.3	1.2	0.0	0.3	0.3	0.3	0.0	0.0	0.0	0.4	0.4	0.4

Overlook Parkway Extension
Ex Open + Alt3
AM Peak Hour

Note: Queue reported is the number of cars per lane.

Overlook Parkway Extension
Ex Open + Alt3
AM Peak Hour

Level Of Service Computation Report
2000 HCM 4-Way Stop Method (Future Volume Alternative)

Intersection #82 Washington St/Victoria Ave (South)

Cycle (sec): 100 | Critical Vol./Cap.(X): 0.566
Loss Time (sec): 0 (Y+R=4.0 sec) | Average Delay (sec/veh): 14.7
Optimal Cycle: 0 | Level Of Service: B

Street Name:	Washington St						Victoria Ave (South)					
Approach:	North Bound			South Bound			East Bound			West Bound		
Movement:	L -	T -	R	L -	T -	R	L -	T -	R	L -	T -	R
Control:	Stop Sign			Stop Sign			Stop Sign			Stop Sign		
Rights:	Include			Include			Include			Include		
Min. Green:	7	7	7	7	7	7	7	7	7	7	7	7
Lanes:	0 0	2 0	1	0 1	0 0	0	0 1	0 0	1	0 0	0 0	0
Volume Module:												
Base Vol:	0	688	365	9	282	0	11	183	110	0	0	0
Growth Adj:	1.00	1.00	1.00	1.00	1.00	1.00	1.00	1.00	1.00	1.00	1.00	1.00
Initial Bse:	0	688	365	9	282	0	11	183	110	0	0	0
Added Vol:	0	0	0	0	0	0	0	0	0	0	0	0
PasserByVol:	0	0	0	0	0	0	0	0	0	0	0	0
Initial Fut:	0	688	365	9	282	0	11	183	110	0	0	0
User Adj:	1.00	1.00	1.00	1.00	1.00	1.00	1.00	1.00	1.00	1.00	1.00	1.00
PHF Adj:	1.00	1.00	1.00	1.00	1.00	1.00	1.00	1.00	1.00	1.00	1.00	1.00
PHF Volume:	0	688	365	9	282	0	11	183	110	0	0	0
Reduct Vol:	0	0	0	0	0	0	0	0	0	0	0	0
Reduced Vol:	0	688	365	9	282	0	11	183	110	0	0	0
PCE Adj:	1.00	1.00	1.00	1.00	1.00	1.00	1.00	1.00	1.00	1.00	1.00	1.00
MLF Adj:	1.00	1.00	1.00	1.00	1.00	1.00	1.00	1.00	1.00	1.00	1.00	1.00
FinalVolume:	0	688	365	9	282	0	11	183	110	0	0	0
Saturation Flow Module:												
Adjustment:	1.00	1.00	1.00	1.00	1.00	1.00	1.00	1.00	1.00	1.00	1.00	1.00
Lanes:	0.00	2.00	1.00	0.03	0.97	0.00	0.06	0.94	1.00	0.00	0.00	0.00
Final Sat.:	0	1214	689	17	546	0	27	457	535	0	0	0
Capacity Analysis Module:												
Vol/Sat:	xxxx	0.57	0.53	0.52	0.52	xxxx	0.40	0.40	0.21	xxxx	xxxx	xxxx
Crit Moves:		****			****		****					
Delay/Veh:	0.0	15.8	13.4	15.6	15.6	0.0	14.1	14.1	10.6	0.0	0.0	0.0
Delay Adj:	1.00	1.00	1.00	1.00	1.00	1.00	1.00	1.00	1.00	1.00	1.00	1.00
AdjDel/Veh:	0.0	15.8	13.4	15.6	15.6	0.0	14.1	14.1	10.6	0.0	0.0	0.0
LOS by Move:	*	C	B	C	C	*	B	B	B	*	*	*
ApproachDel:		15.0			15.6			12.9			xxxxxx	
Delay Adj:		1.00			1.00			1.00			xxxxx	
ApprAdjDel:		15.0			15.6			12.9			xxxxxx	
LOS by Appr:		B			C			B			*	
AllWayAvgQ:	0.0	1.2	1.1	1.0	1.0	1.0	0.6	0.6	0.2	0.0	0.0	0.0

Overlook Parkway Extension
Ex Open + Alt3
AM Peak Hour

Note: Queue reported is the number of cars per lane.

Overlook Parkway Extension
Ex Open + Alt3
AM Peak Hour

Level Of Service Computation Report
2000 HCM 4-Way Stop Method (Future Volume Alternative)

Intersection #221 Mary St/Victoria Ave (North)

Cycle (sec):	100	Critical Vol./Cap.(X):	0.786
Loss Time (sec):	0 (Y+R=4.0 sec)	Average Delay (sec/veh):	18.1
Optimal Cycle:	0	Level Of Service:	C

Street Name:	Mary St						Victoria Ave (North)					
Approach:	North Bound			South Bound			East Bound			West Bound		
Movement:	L	- T	- R	L	- T	- R	L	- T	- R	L	- T	- R
Control:	Stop Sign			Stop Sign			Stop Sign			Stop Sign		
Rights:	Include			Include			Include			Include		
Min. Green:	7	7	7	7	7	7	7	7	7	7	7	7
Lanes:	0 1	0 0	0	0 0	0 1	0	0 0	0 0	0	0 0	1! 0	0
Volume Module:												
Base Vol:	21	525	0	0	112	71	0	0	0	33	190	111
Growth Adj:	1.00	1.00	1.00	1.00	1.00	1.00	1.00	1.00	1.00	1.00	1.00	1.00
Initial Bse:	21	525	0	0	112	71	0	0	0	33	190	111
Added Vol:	0	0	0	0	0	0	0	0	0	0	0	0
PasserByVol:	0	0	0	0	0	0	0	0	0	0	0	0
Initial Fut:	21	525	0	0	112	71	0	0	0	33	190	111
User Adj:	1.00	1.00	1.00	1.00	1.00	1.00	1.00	1.00	1.00	1.00	1.00	1.00
PHF Adj:	1.00	1.00	1.00	1.00	1.00	1.00	1.00	1.00	1.00	1.00	1.00	1.00
PHF Volume:	21	525	0	0	112	71	0	0	0	33	190	111
Reduct Vol:	0	0	0	0	0	0	0	0	0	0	0	0
Reduced Vol:	21	525	0	0	112	71	0	0	0	33	190	111
PCE Adj:	1.00	1.00	1.00	1.00	1.00	1.00	1.00	1.00	1.00	1.00	1.00	1.00
MLF Adj:	1.00	1.00	1.00	1.00	1.00	1.00	1.00	1.00	1.00	1.00	1.00	1.00
FinalVolume:	21	525	0	0	112	71	0	0	0	33	190	111
Saturation Flow Module:												
Adjustment:	1.00	1.00	1.00	1.00	1.00	1.00	1.00	1.00	1.00	1.00	1.00	1.00
Lanes:	0.04	0.96	0.00	0.00	0.61	0.39	0.00	0.00	0.00	0.10	0.57	0.33
Final Sat.:	27	668	0	0	389	247	0	0	0	62	356	208
Capacity Analysis Module:												
Vol/Sat:	0.79	0.79	xxxx	xxxx	0.29	0.29	xxxx	xxxx	xxxx	0.53	0.53	0.53
Crit Moves:		****			****						****	
Delay/Veh:	23.3	23.3	0.0	0.0	10.3	10.3	0.0	0.0	0.0	13.9	13.9	13.9
Delay Adj:	1.00	1.00	1.00	1.00	1.00	1.00	1.00	1.00	1.00	1.00	1.00	1.00
AdjDel/Veh:	23.3	23.3	0.0	0.0	10.3	10.3	0.0	0.0	0.0	13.9	13.9	13.9
LOS by Move:	C	C	*	*	B	B	*	*	*	B	B	B
ApproachDel:	23.3			10.3			xxxxxx			13.9		
Delay Adj:	1.00			1.00			xxxxx			1.00		
ApprAdjDel:	23.3			10.3			xxxxxx			13.9		
LOS by Appr:	C			B			*			B		
AllWayAvgQ:	2.9	2.9	2.9	0.3	0.3	0.3	0.0	0.0	0.0	0.9	0.9	0.9

Overlook Parkway Extension
Ex Open + Alt3
AM Peak Hour

Note: Queue reported is the number of cars per lane.

Overlook Parkway Extension
Ex Open + Alt3
AM Peak Hour

Level Of Service Computation Report
2000 HCM 4-Way Stop Method (Future Volume Alternative)

Intersection #222 Mary St/Victoria Ave (South)

Cycle (sec):	100	Critical Vol./Cap.(X):	0.597
Loss Time (sec):	0 (Y+R=4.0 sec)	Average Delay (sec/veh):	13.5
Optimal Cycle:	0	Level Of Service:	B

Street Name:	Mary St							Victoria Ave (South)					
Approach:	North Bound			South Bound			East Bound			West Bound			
Movement:	L	- T	- R	L	- T	- R	L	- T	- R	L	- T	- R	
Control:	Stop Sign			Stop Sign			Stop Sign			Stop Sign			
Rights:	Include			Include			Include			Include			
Min. Green:	7	7	7	7	7	7	7	7	7	7	7	7	
Lanes:	0 0	0 1	0	0 1	0 0	0	1 0	0 1	0	0 0	0 0	0	
Volume Module:													
Base Vol:	0	202	104	50	95	0	344	199	16	0	0	0	
Growth Adj:	1.00	1.00	1.00	1.00	1.00	1.00	1.00	1.00	1.00	1.00	1.00	1.00	
Initial Bse:	0	202	104	50	95	0	344	199	16	0	0	0	
Added Vol:	0	0	0	0	0	0	0	0	0	0	0	0	
PasserByVol:	0	0	0	0	0	0	0	0	0	0	0	0	
Initial Fut:	0	202	104	50	95	0	344	199	16	0	0	0	
User Adj:	1.00	1.00	1.00	1.00	1.00	1.00	1.00	1.00	1.00	1.00	1.00	1.00	
PHF Adj:	1.00	1.00	1.00	1.00	1.00	1.00	1.00	1.00	1.00	1.00	1.00	1.00	
PHF Volume:	0	202	104	50	95	0	344	199	16	0	0	0	
Reduct Vol:	0	0	0	0	0	0	0	0	0	0	0	0	
Reduced Vol:	0	202	104	50	95	0	344	199	16	0	0	0	
PCE Adj:	1.00	1.00	1.00	1.00	1.00	1.00	1.00	1.00	1.00	1.00	1.00	1.00	
MLF Adj:	1.00	1.00	1.00	1.00	1.00	1.00	1.00	1.00	1.00	1.00	1.00	1.00	
FinalVolume:	0	202	104	50	95	0	344	199	16	0	0	0	
Saturation Flow Module:													
Adjustment:	1.00	1.00	1.00	1.00	1.00	1.00	1.00	1.00	1.00	1.00	1.00	1.00	
Lanes:	0.00	0.66	0.34	0.34	0.66	0.00	1.00	0.93	0.07	0.00	0.00	0.00	
Final Sat.:	0	436	225	205	390	0	576	584	47	0	0	0	
Capacity Analysis Module:													
Vol/Sat:	xxxx	0.46	0.46	0.24	0.24	xxxx	0.60	0.34	0.34	xxxx	xxxx	xxxx	
Crit Moves:		****			****		****						
Delay/Veh:	0.0	12.5	12.5	10.5	10.5	0.0	17.2	11.1	11.1	0.0	0.0	0.0	
Delay Adj:	1.00	1.00	1.00	1.00	1.00	1.00	1.00	1.00	1.00	1.00	1.00	1.00	
AdjDel/Veh:	0.0	12.5	12.5	10.5	10.5	0.0	17.2	11.1	11.1	0.0	0.0	0.0	
LOS by Move:	*	B	B	B	B	*	C	B	B	*	*	*	
ApproachDel:		12.5			10.5			14.8			xxxxxx		
Delay Adj:		1.00			1.00			1.00			xxxxx		
ApprAdjDel:		12.5			10.5			14.8			xxxxxx		
LOS by Appr:		B			B			B			*		
AllWayAvgQ:	0.8	0.8	0.8	0.3	0.3	0.3	1.3	0.5	0.5	0.0	0.0	0.0	

Overlook Parkway Extension
Ex Open + Alt3
AM Peak Hour

Note: Queue reported is the number of cars per lane.

Traffix 7.9.0415 (c) 2007 Dowling Assoc. Licensed to MMA, LONG BEACH, CA

Overlook Parkway Extension
Ex Open + Alt3
PM Peak Hour

Scenario Report

Scenario:	Ex Open + Alt3 PM
Command:	Ex Open + Alt3 PM
Volume:	Ex Open + Alt3 PM
Geometry:	Ex + Alt3
Impact Fee:	Default Impact Fee
Trip Generation:	none
Trip Distribution:	none
Paths:	Default Path
Routes:	Default Route
Configuration:	Ex Open + Alt3 PM

Traffix 7.9.0415 (c) 2007 Dowling Assoc. Licensed to MMA, LONG BEACH, CA

Overlook Parkway Extension
Ex Open + Alt3
PM Peak Hour

Impact Analysis Report
Level Of Service

Intersection	Base LOS	Base Del/ Veh	Base V/ C	Future LOS	Future Del/ Veh	Future V/ C	Change in
# 1 Madison St/SR-91 WB Ramps	C	27.2	0.576	C	27.2	0.576	+ 0.000 D/V
# 2 Madison St/SR-91 EB Ramps	C	25.4	0.550	C	25.4	0.550	+ 0.000 D/V
# 3 Madison St/Indiana Ave	D	38.8	0.799	D	38.8	0.799	+ 0.000 D/V
# 4 Madison St/Lincoln Ave	C	29.7	0.324	C	29.7	0.324	+ 0.000 D/V
# 6 Washington St/Indiana Ave	C	24.8	0.486	C	24.8	0.486	+ 0.000 D/V
# 7 Washington St/Lincoln Ave	B	14.5	0.598	B	14.5	0.598	+ 0.000 V/C
# 9 Washington St/Overlook Pkwy	B	16.8	0.466	B	16.8	0.466	+ 0.000 D/V
# 10 Riverside Ave-SR-91 WB/Arlingt	C	30.5	0.745	C	30.5	0.745	+ 0.000 D/V
# 11 Indiana Ave-SR-91 EB/Arlington	C	27.2	0.655	C	27.2	0.655	+ 0.000 D/V
# 12 Victoria Ave/Arlington Ave	C	30.4	0.731	C	30.4	0.731	+ 0.000 D/V
# 13 Alessandro Blvd/Arlington Ave	D	37.8	0.847	D	37.8	0.847	+ 0.000 D/V
# 14 Alessandro Blvd/Overlook Pkwy	F	151.5	1.364	F	151.5	1.364	+ 0.000 D/V
# 15 Alessandro Blvd/Trautwein Rd	C	20.4	0.696	C	20.4	0.696	+ 0.000 D/V
# 16 Crystal View Ter/Overlook Pkwy	B	13.7	0.581	B	13.7	0.581	+ 0.000 V/C
# 17 Kingdom Dr/Overlook Pkwy	C	22.4	0.000	C	22.4	0.000	+ 0.000 D/V
# 18 Kingdom Dr/Green Orchard Pl	A	9.2	0.000	A	9.2	0.000	+ 0.000 D/V
# 19 Trautwein Rd/John F. Kennedy D	B	17.5	0.581	B	17.5	0.581	+ 0.000 D/V
# 20 Washington St/Bradley St	C	25.3	0.593	C	25.3	0.593	+ 0.000 D/V
# 21 Alessandro Blvd/Via Vista Dr	B	17.4	0.731	B	17.4	0.731	+ 0.000 D/V
# 23 Mary St/Hawarden Dr	A	9.1	0.417	A	9.1	0.417	+ 0.000 V/C
# 24 Hawarden Dr/Overlook Pkwy	B	12.0	0.401	B	12.0	0.401	+ 0.000 V/C
# 25 Crystal View Ter/Berry Rd	A	7.5	0.125	A	7.5	0.125	+ 0.000 V/C
# 26 Corinthian Wy/Berry Rd	A	7.2	0.077	A	7.2	0.077	+ 0.000 V/C

Overlook Parkway Extension
Ex Open + Alt3
PM Peak Hour

Intersection	Base LOS	Base Del/ Veh	Base V/ C	Future LOS	Future Del/ Veh	Future V/ C	Change in
# 28 Orozco Dr/Overlook Pkwy	C	23.8	0.000	C	23.8	0.000	+ 0.000 D/V
# 51 Madison St/Victoria Ave (North	B	10.4	0.373	B	10.4	0.373	+ 0.000 V/C
# 52 Madison St/Victoria Ave (South	B	11.7	0.555	B	11.7	0.555	+ 0.000 V/C
# 81 Washington St/Victoria Ave (No	B	13.6	0.544	B	13.6	0.544	+ 0.000 V/C
# 82 Washington St/Victoria Ave (So	D	29.5	0.981	D	29.5	0.981	+ 0.000 V/C
#221 Mary St/Victoria Ave (North)	C	20.2	0.814	C	20.2	0.814	+ 0.000 V/C
#222 Mary St/Victoria Ave (South)	B	14.7	0.703	B	14.7	0.703	+ 0.000 V/C

Overlook Parkway Extension
Ex Open + Alt3
PM Peak Hour

Level Of Service Computation Report
2000 HCM Operations Method (Future Volume Alternative)

Intersection #1 Madison St/SR-91 WB Ramps

Cycle (sec):	100	Critical Vol./Cap.(X):	0.576
Loss Time (sec):	12 (Y+R=4.0 sec)	Average Delay (sec/veh):	27.2
Optimal Cycle:	50	Level Of Service:	C

Street Name:	Madison St						SR-91 WB Ramps					
Approach:	North Bound			South Bound			East Bound			West Bound		
Movement:	L -	T -	R	L -	T -	R	L -	T -	R	L -	T -	R
Control:	Protected			Protected			Split Phase			Split Phase		
Rights:	Include			Include			Include			Include		
Min. Green:	7	7	7	7	7	7	7	7	7	7	7	7
Lanes:	1 0	2 0	0	0 0	3 0	1	0 0	0 0	0	0 1	0 0	1
Volume Module:												
Base Vol:	379	568	0	0	575	268	0	0	0	225	2	162
Growth Adj:	1.00	1.00	1.00	1.00	1.00	1.00	1.00	1.00	1.00	1.00	1.00	1.00
Initial Bse:	379	568	0	0	575	268	0	0	0	225	2	162
Added Vol:	0	0	0	0	0	0	0	0	0	0	0	0
PasserByVol:	0	0	0	0	0	0	0	0	0	0	0	0
Initial Fut:	379	568	0	0	575	268	0	0	0	225	2	162
User Adj:	1.00	1.00	1.00	1.00	1.00	1.00	1.00	1.00	1.00	1.00	1.00	1.00
PHF Adj:	1.00	1.00	1.00	1.00	1.00	1.00	1.00	1.00	1.00	1.00	1.00	1.00
PHF Volume:	379	568	0	0	575	268	0	0	0	225	2	162
Reduct Vol:	0	0	0	0	0	0	0	0	0	0	0	0
Reduced Vol:	379	568	0	0	575	268	0	0	0	225	2	162
PCE Adj:	1.00	1.00	1.00	1.00	1.00	1.00	1.00	1.00	1.00	1.00	1.00	1.00
MLF Adj:	1.00	1.00	1.00	1.00	1.00	1.00	1.00	1.00	1.00	1.00	1.00	1.00
FinalVolume:	379	568	0	0	575	268	0	0	0	225	2	162
Saturation Flow Module:												
Sat/Lane:	1900	1900	1900	1900	1900	1900	1900	1900	1900	1900	1900	1900
Adjustment:	0.95	0.95	1.00	1.00	0.91	0.85	1.00	1.00	1.00	0.91	0.91	0.85
Lanes:	1.00	2.00	0.00	0.00	3.00	1.00	0.00	0.00	0.00	0.99	0.01	1.00
Final Sat.:	1805	3610	0	0	5187	1615	0	0	0	1719	15	1615
Capacity Analysis Module:												
Vol/Sat:	0.21	0.16	0.00	0.00	0.11	0.17	0.00	0.00	0.00	0.13	0.13	0.10
Crit Moves:	****					****					****	
Green/Cycle:	0.36	0.45	0.00	0.00	0.29	0.29	0.00	0.00	0.00	0.23	0.23	0.23
Volume/Cap:	0.58	0.35	0.00	0.00	0.38	0.58	0.00	0.00	0.00	0.58	0.58	0.44
Delay/Veh:	26.8	18.0	0.0	0.0	28.7	32.2	0.0	0.0	0.0	36.4	36.4	34.0
User DelAdj:	1.00	1.00	1.00	1.00	1.00	1.00	1.00	1.00	1.00	1.00	1.00	1.00
AdjDel/Veh:	26.8	18.0	0.0	0.0	28.7	32.2	0.0	0.0	0.0	36.4	36.4	34.0
LOS by Move:	C	B	A	A	C	C	A	A	A	D	D	C
HCM2kAvgQ:	10	6	0	0	5	8	0	0	0	7	7	5

Note: Queue reported is the number of cars per lane.

Traffix 7.9.0415 (c) 2007 Dowling Assoc. Licensed to MMA, LONG BEACH, CA

Overlook Parkway Extension
Ex Open + Alt3
PM Peak Hour

Level Of Service Computation Report
2000 HCM Operations Method (Future Volume Alternative)

Intersection #2 Madison St/SR-91 EB Ramps

Cycle (sec):	100	Critical Vol./Cap.(X):	0.550
Loss Time (sec):	12 (Y+R=4.0 sec)	Average Delay (sec/veh):	25.4
Optimal Cycle:	50	Level Of Service:	C

Street Name:	Madison St						SR-91 EB Ramps					
Approach:	North Bound			South Bound			East Bound			West Bound		
Movement:	L -	T -	R	L -	T -	R	L -	T -	R	L -	T -	R
Control:	Protected			Protected			Protected			Protected		
Rights:	Include			Include			Include			Include		
Min. Green:	7	7	7	7	7	7	7	7	7	7	7	7
Lanes:	0 0	3 0	1	1 0	2 0	0	0 1	0 0	1	0 0	0 0	0
Volume Module:												
Base Vol:	0	741	345	182	655	0	198	4	274	0	0	0
Growth Adj:	1.00	1.00	1.00	1.00	1.00	1.00	1.00	1.00	1.00	1.00	1.00	1.00
Initial Bse:	0	741	345	182	655	0	198	4	274	0	0	0
Added Vol:	0	0	0	0	0	0	0	0	0	0	0	0
PasserByVol:	0	0	0	0	0	0	0	0	0	0	0	0
Initial Fut:	0	741	345	182	655	0	198	4	274	0	0	0
User Adj:	1.00	1.00	1.00	1.00	1.00	1.00	1.00	1.00	1.00	1.00	1.00	1.00
PHF Adj:	1.00	1.00	1.00	1.00	1.00	1.00	1.00	1.00	1.00	1.00	1.00	1.00
PHF Volume:	0	741	345	182	655	0	198	4	274	0	0	0
Reduct Vol:	0	0	0	0	0	0	0	0	0	0	0	0
Reduced Vol:	0	741	345	182	655	0	198	4	274	0	0	0
PCE Adj:	1.00	1.00	1.00	1.00	1.00	1.00	1.00	1.00	1.00	1.00	1.00	1.00
MLF Adj:	1.00	1.00	1.00	1.00	1.00	1.00	1.00	1.00	1.00	1.00	1.00	1.00
FinalVolume:	0	741	345	182	655	0	198	4	274	0	0	0
Saturation Flow Module:												
Sat/Lane:	1900	1900	1900	1900	1900	1900	1900	1900	1900	1900	1900	1900
Adjustment:	1.00	0.91	0.85	0.95	0.95	1.00	0.94	0.94	0.85	1.00	1.00	1.00
Lanes:	0.00	3.00	1.00	1.00	2.00	0.00	0.98	0.02	1.00	0.00	0.00	0.00
Final Sat.:	0	5187	1615	1805	3610	0	1747	35	1615	0	0	0
Capacity Analysis Module:												
Vol/Sat:	0.00	0.14	0.21	0.10	0.18	0.00	0.11	0.11	0.17	0.00	0.00	0.00
Crit Moves:			****	****					****			
Green/Cycle:	0.00	0.39	0.39	0.18	0.41	0.00	0.23	0.31	0.31	0.00	0.00	0.00
Volume/Cap:	0.00	0.37	0.55	0.55	0.44	0.00	0.48	0.37	0.55	0.00	0.00	0.00
Delay/Veh:	0.0	21.9	24.8	39.1	21.3	0.0	34.0	27.4	30.1	0.0	0.0	0.0
User DelAdj:	1.00	1.00	1.00	1.00	1.00	1.00	1.00	1.00	1.00	1.00	1.00	1.00
AdjDel/Veh:	0.0	21.9	24.8	39.1	21.3	0.0	34.0	27.4	30.1	0.0	0.0	0.0
LOS by Move:	A	C	C	D	C	A	C	C	C	A	A	A
HCM2kAvgQ:	0	6	9	6	8	0	6	5	8	0	0	0

Note: Queue reported is the number of cars per lane.

Traffix 7.9.0415 (c) 2007 Dowling Assoc. Licensed to MMA, LONG BEACH, CA

Overlook Parkway Extension
Ex Open + Alt3
PM Peak Hour

Level Of Service Computation Report
2000 HCM Operations Method (Future Volume Alternative)

Intersection #3 Madison St/Indiana Ave

Cycle (sec): 100 Critical Vol./Cap.(X): 0.799
Loss Time (sec): 16 (Y+R=4.0 sec) Average Delay (sec/veh): 38.8
Optimal Cycle: 86 Level Of Service: D

Street Name:	Madison St						Indiana Ave					
Approach:	North Bound			South Bound			East Bound			West Bound		
Movement:	L -	T -	R	L -	T -	R	L -	T -	R	L -	T -	R
Control:	Protected			Protected			Protected			Protected		
Rights:	Include			Include			Include			Include		
Min. Green:	7	7	7	7	7	7	7	7	7	7	7	7
Lanes:	1 0	1 1	0	1 0	1 1	0	1 0	1 1	0	1 0	1 1	0
Volume Module:												
Base Vol:	46	459	32	281	526	89	207	381	57	40	241	430
Growth Adj:	1.00	1.00	1.00	1.00	1.00	1.00	1.00	1.00	1.00	1.00	1.00	1.00
Initial Bse:	46	459	32	281	526	89	207	381	57	40	241	430
Added Vol:	0	0	0	0	0	0	0	0	0	0	0	0
PasserByVol:	0	0	0	0	0	0	0	0	0	0	0	0
Initial Fut:	46	459	32	281	526	89	207	381	57	40	241	430
User Adj:	1.00	1.00	1.00	1.00	1.00	1.00	1.00	1.00	1.00	1.00	1.00	1.00
PHF Adj:	1.00	1.00	1.00	1.00	1.00	1.00	1.00	1.00	1.00	1.00	1.00	1.00
PHF Volume:	46	459	32	281	526	89	207	381	57	40	241	430
Reduct Vol:	0	0	0	0	0	0	0	0	0	0	0	0
Reduced Vol:	46	459	32	281	526	89	207	381	57	40	241	430
PCE Adj:	1.00	1.00	1.00	1.00	1.00	1.00	1.00	1.00	1.00	1.00	1.00	1.00
MLF Adj:	1.00	1.00	1.00	1.00	1.00	1.00	1.00	1.00	1.00	1.00	1.00	1.00
FinalVolume:	46	459	32	281	526	89	207	381	57	40	241	430
Saturation Flow Module:												
Sat/Lane:	1900	1900	1900	1900	1900	1900	1900	1900	1900	1900	1900	1900
Adjustment:	0.95	0.94	0.94	0.95	0.93	0.93	0.95	0.93	0.93	0.95	0.86	0.86
Lanes:	1.00	1.87	0.13	1.00	1.71	0.29	1.00	1.74	0.26	1.00	1.00	1.00
Final Sat.:	1805	3341	233	1805	3020	511	1805	3081	461	1805	1632	1632
Capacity Analysis Module:												
Vol/Sat:	0.03	0.14	0.14	0.16	0.17	0.17	0.11	0.12	0.12	0.02	0.15	0.26
Crit Moves:		****		****			****					****
Green/Cycle:	0.11	0.17	0.17	0.19	0.26	0.26	0.14	0.30	0.30	0.17	0.33	0.33
Volume/Cap:	0.24	0.80	0.80	0.80	0.67	0.67	0.80	0.41	0.41	0.13	0.45	0.80
Delay/Veh:	41.8	47.1	47.1	50.6	34.9	34.9	57.4	28.0	28.0	35.3	26.6	36.0
User DelAdj:	1.00	1.00	1.00	1.00	1.00	1.00	1.00	1.00	1.00	1.00	1.00	1.00
AdjDel/Veh:	41.8	47.1	47.1	50.6	34.9	34.9	57.4	28.0	28.0	35.3	26.6	36.0
LOS by Move:	D	D	D	D	C	C	E	C	C	D	C	D
HCM2kAvgQ:	1	10	10	10	10	10	8	6	6	1	6	15

Note: Queue reported is the number of cars per lane.

Traffix 7.9.0415 (c) 2007 Dowling Assoc. Licensed to MMA, LONG BEACH, CA

Overlook Parkway Extension
Ex Open + Alt3
PM Peak Hour

Level Of Service Computation Report
2000 HCM Operations Method (Future Volume Alternative)

Intersection #4 Madison St/Lincoln Ave

Cycle (sec): 100 Critical Vol./Cap.(X): 0.324
Loss Time (sec): 16 (Y+R=4.0 sec) Average Delay (sec/veh): 29.7
Optimal Cycle: 50 Level Of Service: C

Street Name:	Madison St						Lincoln Ave					
Approach:	North Bound			South Bound			East Bound			West Bound		
Movement:	L -	T -	R	L -	T -	R	L -	T -	R	L -	T -	R
Control:	Protected			Protected			Protected			Protected		
Rights:	Include			Include			Include			Include		
Min. Green:	7	7	7	7	7	7	7	7	7	7	7	7
Lanes:	1 0	0 1	0	1 0	0 1	0	1 0	0 1	0	1 0	1 1	0
Volume Module:												
Base Vol:	7	124	4	90	207	63	114	206	15	6	120	96
Growth Adj:	1.00	1.00	1.00	1.00	1.00	1.00	1.00	1.00	1.00	1.00	1.00	1.00
Initial Bse:	7	124	4	90	207	63	114	206	15	6	120	96
Added Vol:	0	0	0	0	0	0	0	0	0	0	0	0
PasserByVol:	0	0	0	0	0	0	0	0	0	0	0	0
Initial Fut:	7	124	4	90	207	63	114	206	15	6	120	96
User Adj:	1.00	1.00	1.00	1.00	1.00	1.00	1.00	1.00	1.00	1.00	1.00	1.00
PHF Adj:	1.00	1.00	1.00	1.00	1.00	1.00	1.00	1.00	1.00	1.00	1.00	1.00
PHF Volume:	7	124	4	90	207	63	114	206	15	6	120	96
Reduct Vol:	0	0	0	0	0	0	0	0	0	0	0	0
Reduced Vol:	7	124	4	90	207	63	114	206	15	6	120	96
PCE Adj:	1.00	1.00	1.00	1.00	1.00	1.00	1.00	1.00	1.00	1.00	1.00	1.00
MLF Adj:	1.00	1.00	1.00	1.00	1.00	1.00	1.00	1.00	1.00	1.00	1.00	1.00
FinalVolume:	7	124	4	90	207	63	114	206	15	6	120	96
Saturation Flow Module:												
Sat/Lane:	1900	1900	1900	1900	1900	1900	1900	1900	1900	1900	1900	1900
Adjustment:	0.95	1.00	1.00	0.95	0.97	0.97	0.95	0.99	0.99	0.95	0.89	0.89
Lanes:	1.00	0.97	0.03	1.00	0.77	0.23	1.00	0.93	0.07	1.00	1.11	0.89
Final Sat.:	1805	1831	59	1805	1406	428	1805	1753	128	1805	1871	1497
Capacity Analysis Module:												
Vol/Sat:	0.00	0.07	0.07	0.05	0.15	0.15	0.06	0.12	0.12	0.00	0.06	0.06
Crit Moves:	****				****			****		****		
Green/Cycle:	0.07	0.23	0.23	0.23	0.39	0.39	0.19	0.31	0.31	0.07	0.19	0.19
Volume/Cap:	0.06	0.29	0.29	0.22	0.38	0.38	0.33	0.38	0.38	0.05	0.34	0.34
Delay/Veh:	43.6	32.2	32.2	31.5	22.2	22.2	35.6	27.3	27.3	43.5	35.3	35.3
User DelAdj:	1.00	1.00	1.00	1.00	1.00	1.00	1.00	1.00	1.00	1.00	1.00	1.00
AdjDel/Veh:	43.6	32.2	32.2	31.5	22.2	22.2	35.6	27.3	27.3	43.5	35.3	35.3
LOS by Move:	D	C	C	C	C	C	D	C	C	D	D	D
HCM2kAvgQ:	0	3	3	2	6	6	3	5	5	0	3	3

Note: Queue reported is the number of cars per lane.

Traffix 7.9.0415 (c) 2007 Dowling Assoc. Licensed to MMA, LONG BEACH, CA

Overlook Parkway Extension
Ex Open + Alt3
PM Peak Hour

Level Of Service Computation Report
2000 HCM Operations Method (Future Volume Alternative)

Intersection #6 Washington St/Indiana Ave

Cycle (sec):	100	Critical Vol./Cap.(X):	0.486
Loss Time (sec):	12 (Y+R=4.0 sec)	Average Delay (sec/veh):	24.8
Optimal Cycle:	50	Level Of Service:	C

Street Name:	Washington St						Indiana Ave					
Approach:	North Bound			South Bound			East Bound			West Bound		
Movement:	L - T - R			L - T - R			L - T - R			L - T - R		
Control:	Permitted			Permitted			Protected			Protected		
Rights:	Ovl			Include			Include			Include		
Min. Green:	7	7	7	7	7	7	7	7	7	7	7	7
Lanes:	1 0	0 1	0	1 0	0 1	0	1 0	1 1	0	1 0	1 1	0
Volume Module:												
Base Vol:	247	1	84	8	5	20	4	421	249	104	430	1
Growth Adj:	1.00	1.00	1.00	1.00	1.00	1.00	1.00	1.00	1.00	1.00	1.00	1.00
Initial Bse:	247	1	84	8	5	20	4	421	249	104	430	1
Added Vol:	0	0	0	0	0	0	0	0	0	0	0	0
PasserByVol:	0	0	0	0	0	0	0	0	0	0	0	0
Initial Fut:	247	1	84	8	5	20	4	421	249	104	430	1
User Adj:	1.00	1.00	1.00	1.00	1.00	1.00	1.00	1.00	1.00	1.00	1.00	1.00
PHF Adj:	1.00	1.00	1.00	1.00	1.00	1.00	1.00	1.00	1.00	1.00	1.00	1.00
PHF Volume:	247	1	84	8	5	20	4	421	249	104	430	1
Reduct Vol:	0	0	0	0	0	0	0	0	0	0	0	0
Reduced Vol:	247	1	84	8	5	20	4	421	249	104	430	1
PCE Adj:	1.00	1.00	1.00	1.00	1.00	1.00	1.00	1.00	1.00	1.00	1.00	1.00
MLF Adj:	1.00	1.00	1.00	1.00	1.00	1.00	1.00	1.00	1.00	1.00	1.00	1.00
FinalVolume:	247	1	84	8	5	20	4	421	249	104	430	1
Saturation Flow Module:												
Sat/Lane:	1900	1900	1900	1900	1900	1900	1900	1900	1900	1900	1900	1900
Adjustment:	0.75	0.85	0.85	0.70	0.88	0.88	0.95	0.90	0.90	0.95	0.95	0.95
Lanes:	1.00	0.01	0.99	1.00	0.20	0.80	1.00	1.26	0.74	1.00	1.99	0.01
Final Sat.:	1421	19	1600	1332	334	1338	1805	2141	1266	1805	3602	8
Capacity Analysis Module:												
Vol/Sat:	0.17	0.05	0.05	0.01	0.01	0.01	0.00	0.20	0.20	0.06	0.12	0.12
Crit Moves:	****							****		****		
Green/Cycle:	0.36	0.36	0.48	0.36	0.36	0.36	0.19	0.40	0.40	0.12	0.33	0.33
Volume/Cap:	0.49	0.15	0.11	0.02	0.04	0.04	0.01	0.49	0.49	0.49	0.36	0.36
Delay/Veh:	25.7	21.9	14.6	20.8	21.0	21.0	32.6	22.4	22.4	43.0	25.7	25.7
User DelAdj:	1.00	1.00	1.00	1.00	1.00	1.00	1.00	1.00	1.00	1.00	1.00	1.00
AdjDel/Veh:	25.7	21.9	14.6	20.8	21.0	21.0	32.6	22.4	22.4	43.0	25.7	25.7
LOS by Move:	C	C	B	C	C	C	C	C	C	D	C	C
HCM2kAvgQ:	6	2	1	0	0	0	0	8	8	4	5	5

Note: Queue reported is the number of cars per lane.

Traffix 7.9.0415 (c) 2007 Dowling Assoc. Licensed to MMA, LONG BEACH, CA

Overlook Parkway Extension
Ex Open + Alt3
PM Peak Hour

Level Of Service Computation Report
2000 HCM 4-Way Stop Method (Future Volume Alternative)

Intersection #7 Washington St/Lincoln Ave

Cycle (sec):	100	Critical Vol./Cap.(X):	0.598
Loss Time (sec):	0 (Y+R=4.0 sec)	Average Delay (sec/veh):	14.5
Optimal Cycle:	0	Level Of Service:	B

Street Name:	Washington St						Lincoln Ave					
Approach:	North Bound			South Bound			East Bound			West Bound		
Movement:	L - T - R			L - T - R			L - T - R			L - T - R		
Control:	Stop Sign			Stop Sign			Stop Sign			Stop Sign		
Rights:	Include			Include			Include			Include		
Min. Green:	7	7	7	7	7	7	7	7	7	7	7	7
Lanes:	0 0	1! 0	0	0 0	1! 0	0	0 0	1! 0	0	0 1	0 0	1
Volume Module:												
Base Vol:	32	239	9	39	271	44	21	222	38	16	149	26
Growth Adj:	1.00	1.00	1.00	1.00	1.00	1.00	1.00	1.00	1.00	1.00	1.00	1.00
Initial Bse:	32	239	9	39	271	44	21	222	38	16	149	26
Added Vol:	0	0	0	0	0	0	0	0	0	0	0	0
PasserByVol:	0	0	0	0	0	0	0	0	0	0	0	0
Initial Fut:	32	239	9	39	271	44	21	222	38	16	149	26
User Adj:	1.00	1.00	1.00	1.00	1.00	1.00	1.00	1.00	1.00	1.00	1.00	1.00
PHF Adj:	1.00	1.00	1.00	1.00	1.00	1.00	1.00	1.00	1.00	1.00	1.00	1.00
PHF Volume:	32	239	9	39	271	44	21	222	38	16	149	26
Reduct Vol:	0	0	0	0	0	0	0	0	0	0	0	0
Reduced Vol:	32	239	9	39	271	44	21	222	38	16	149	26
PCE Adj:	1.00	1.00	1.00	1.00	1.00	1.00	1.00	1.00	1.00	1.00	1.00	1.00
MLF Adj:	1.00	1.00	1.00	1.00	1.00	1.00	1.00	1.00	1.00	1.00	1.00	1.00
FinalVolume:	32	239	9	39	271	44	21	222	38	16	149	26
Saturation Flow Module:												
Adjustment:	1.00	1.00	1.00	1.00	1.00	1.00	1.00	1.00	1.00	1.00	1.00	1.00
Lanes:	0.11	0.86	0.03	0.11	0.77	0.12	0.07	0.79	0.14	0.10	0.90	1.00
Final Sat.:	65	483	18	65	453	74	41	434	74	47	435	534
Capacity Analysis Module:												
Vol/Sat:	0.50	0.50	0.50	0.60	0.60	0.60	0.51	0.51	0.51	0.34	0.34	0.05
Crit Moves:			****	****				****			****	
Delay/Veh:	14.0	14.0	14.0	16.2	16.2	16.2	14.5	14.5	14.5	12.6	12.6	9.0
Delay Adj:	1.00	1.00	1.00	1.00	1.00	1.00	1.00	1.00	1.00	1.00	1.00	1.00
AdjDel/Veh:	14.0	14.0	14.0	16.2	16.2	16.2	14.5	14.5	14.5	12.6	12.6	9.0
LOS by Move:	B	B	B	C	C	C	B	B	B	B	B	A
ApproachDel:	14.0			16.2			14.5			12.1		
Delay Adj:	1.00			1.00			1.00			1.00		
ApprAdjDel:	14.0			16.2			14.5			12.1		
LOS by Appr:	B			C			B			B		
AllWayAvgQ:	0.8	0.8	0.8	1.2	1.2	1.2	0.8	0.8	0.8	0.4	0.4	0.0

Traffix 7.9.0415 (c) 2007 Dowling Assoc. Licensed to MMA, LONG BEACH, CA

Overlook Parkway Extension
Ex Open + Alt3
PM Peak Hour

Note: Queue reported is the number of cars per lane.

Overlook Parkway Extension
Ex Open + Alt3
PM Peak Hour

Level Of Service Computation Report
2000 HCM Operations Method (Future Volume Alternative)

Intersection #9 Washington St/Overlook Pkwy

Cycle (sec):	100	Critical Vol./Cap.(X):	0.466
Loss Time (sec):	12 (Y+R=4.0 sec)	Average Delay (sec/veh):	16.8
Optimal Cycle:	50	Level Of Service:	B

Street Name:	Washington St						Overlook Pkwy					
Approach:	North Bound			South Bound			East Bound			West Bound		
Movement:	L - T - R			L - T - R			L - T - R			L - T - R		
Control:	Protected			Protected			Protected			Protected		
Rights:	Include			Include			Include			Ovl		
Min. Green:	7	7	7	7	7	7	7	7	7	7	7	7
Lanes:	0 0	1 1	0	1 0	2 0	0	0 0	0 0	0	1 0	0 0	1
Volume Module:												
Base Vol:	0	278	54	495	496	0	0	0	0	75	0	517
Growth Adj:	1.00	1.00	1.00	1.00	1.00	1.00	1.00	1.00	1.00	1.00	1.00	1.00
Initial Bse:	0	278	54	495	496	0	0	0	0	75	0	517
Added Vol:	0	0	0	0	0	0	0	0	0	0	0	0
PasserByVol:	0	0	0	0	0	0	0	0	0	0	0	0
Initial Fut:	0	278	54	495	496	0	0	0	0	75	0	517
User Adj:	1.00	1.00	1.00	1.00	1.00	1.00	1.00	1.00	1.00	1.00	1.00	1.00
PHF Adj:	1.00	1.00	1.00	1.00	1.00	1.00	1.00	1.00	1.00	1.00	1.00	1.00
PHF Volume:	0	278	54	495	496	0	0	0	0	75	0	517
Reduct Vol:	0	0	0	0	0	0	0	0	0	0	0	0
Reduced Vol:	0	278	54	495	496	0	0	0	0	75	0	517
PCE Adj:	1.00	1.00	1.00	1.00	1.00	1.00	1.00	1.00	1.00	1.00	1.00	1.00
MLF Adj:	1.00	1.00	1.00	1.00	1.00	1.00	1.00	1.00	1.00	1.00	1.00	1.00
FinalVolume:	0	278	54	495	496	0	0	0	0	75	0	517
Saturation Flow Module:												
Sat/Lane:	1900	1900	1900	1900	1900	1900	1900	1900	1900	1900	1900	1900
Adjustment:	1.00	0.93	0.93	0.95	0.95	1.00	1.00	1.00	1.00	0.95	1.00	0.85
Lanes:	0.00	1.67	0.33	1.00	2.00	0.00	0.00	0.00	0.00	1.00	0.00	1.00
Final Sat.:	0	2950	573	1805	3610	0	0	0	0	1805	0	1615
Capacity Analysis Module:												
Vol/Sat:	0.00	0.09	0.09	0.27	0.14	0.00	0.00	0.00	0.00	0.04	0.00	0.32
Crit Moves:		****		****						****		
Green/Cycle:	0.00	0.20	0.20	0.59	0.52	0.00	0.00	0.00	0.00	0.09	0.00	0.67
Volume/Cap:	0.00	0.47	0.47	0.47	0.26	0.00	0.00	0.00	0.00	0.47	0.00	0.48
Delay/Veh:	0.0	35.6	35.6	12.0	13.2	0.0	0.0	0.0	0.0	45.4	0.0	8.4
User DelAdj:	1.00	1.00	1.00	1.00	1.00	1.00	1.00	1.00	1.00	1.00	1.00	1.00
AdjDel/Veh:	0.0	35.6	35.6	12.0	13.2	0.0	0.0	0.0	0.0	45.4	0.0	8.4
LOS by Move:	A	D	D	B	B	A	A	A	A	D	A	A
HCM2kAvgQ:	0	5	5	9	4	0	0	0	0	3	0	8

Note: Queue reported is the number of cars per lane.

Overlook Parkway Extension
Ex Open + Alt3
PM Peak Hour

Level Of Service Computation Report
2000 HCM Operations Method (Future Volume Alternative)

Intersection #10 Riverside Ave-SR-91 WB/Arlington Ave

Cycle (sec):	100	Critical Vol./Cap.(X):	0.745
Loss Time (sec):	12 (Y+R=4.0 sec)	Average Delay (sec/veh):	30.5
Optimal Cycle:	66	Level Of Service:	C

Street Name:	Riverside Ave-SR-91 WB						Arlington Ave					
Approach:	North Bound			South Bound			East Bound			West Bound		
Movement:	L - T - R			L - T - R			L - T - R			L - T - R		
Control:	Protected			Protected			Protected			Protected		
Rights:	Include			Ovl			Ignore			Ignore		
Min. Green:	7	7	7	7	7	7	7	7	7	7	7	7
Lanes:	0 0	0 0	0	1 1	0 0	1	1 0	3 0	1	1 0	2 0	1
Volume Module:												
Base Vol:	0	0	0	670	84	436	35	1083	196	416	798	171
Growth Adj:	1.00	1.00	1.00	1.00	1.00	1.00	1.00	1.00	1.00	1.00	1.00	1.00
Initial Bse:	0	0	0	670	84	436	35	1083	196	416	798	171
Added Vol:	0	0	0	0	0	0	0	0	0	0	0	0
PasserByVol:	0	0	0	0	0	0	0	0	0	0	0	0
Initial Fut:	0	0	0	670	84	436	35	1083	196	416	798	171
User Adj:	1.00	1.00	1.00	1.00	1.00	1.00	1.00	1.00	0.00	1.00	1.00	0.00
PHF Adj:	1.00	1.00	1.00	1.00	1.00	1.00	1.00	1.00	0.00	1.00	1.00	0.00
PHF Volume:	0	0	0	670	84	436	35	1083	0	416	798	0
Reduct Vol:	0	0	0	0	0	0	0	0	0	0	0	0
Reduced Vol:	0	0	0	670	84	436	35	1083	0	416	798	0
PCE Adj:	1.00	1.00	1.00	1.00	1.00	1.00	1.00	1.00	0.00	1.00	1.00	0.00
MLF Adj:	1.00	1.00	1.00	1.00	1.00	1.00	1.00	1.00	0.00	1.00	1.00	0.00
FinalVolume:	0	0	0	670	84	436	35	1083	0	416	798	0
Saturation Flow Module:												
Sat/Lane:	1900	1900	1900	1900	1900	1900	1900	1900	1900	1900	1900	1900
Adjustment:	1.00	1.00	1.00	0.92	0.92	0.85	0.95	0.91	1.00	0.95	0.95	1.00
Lanes:	0.00	0.00	0.00	1.78	0.22	1.00	1.00	3.00	1.00	1.00	2.00	1.00
Final Sat.:	0	0	0	3093	388	1615	1805	5187	1900	1805	3610	1900
Capacity Analysis Module:												
Vol/Sat:	0.00	0.00	0.00	0.22	0.22	0.27	0.02	0.21	0.00	0.23	0.22	0.00
Crit Moves:				****				****		****		
Green/Cycle:	0.00	0.00	0.00	0.29	0.28	0.42	0.14	0.28	0.00	0.31	0.45	0.00
Volume/Cap:	0.00	0.00	0.00	0.75	0.77	0.64	0.14	0.75	0.00	0.75	0.49	0.00
Delay/Veh:	0.0	0.0	0.0	35.2	36.7	24.8	37.8	34.9	0.0	36.4	19.8	0.0
User DelAdj:	1.00	1.00	1.00	1.00	1.00	1.00	1.00	1.00	1.00	1.00	1.00	1.00
AdjDel/Veh:	0.0	0.0	0.0	35.2	36.7	24.8	37.8	34.9	0.0	36.4	19.8	0.0
LOS by Move:	A	A	A	D	D	C	D	C	A	D	B	A
HCM2kAvgQ:	0	0	0	12	12	11	1	13	0	13	9	0

Note: Queue reported is the number of cars per lane.

Traffix 7.9.0415 (c) 2007 Dowling Assoc. Licensed to MMA, LONG BEACH, CA

Overlook Parkway Extension
Ex Open + Alt3
PM Peak Hour

Level Of Service Computation Report
2000 HCM Operations Method (Future Volume Alternative)

Intersection #11 Indiana Ave-SR-91 EB/Arlington Ave

Cycle (sec):	100	Critical Vol./Cap.(X):	0.655
Loss Time (sec):	12 (Y+R=4.0 sec)	Average Delay (sec/veh):	27.2
Optimal Cycle:	54	Level Of Service:	C

Street Name:	Indiana Ave-SR-91 EB						Arlington Ave					
Approach:	North Bound			South Bound			East Bound			West Bound		
Movement:	L - T - R			L - T - R			L - T - R			L - T - R		
Control:	Protected			Protected			Protected			Protected		
Rights:	Ovl			Include			Ovl			Ignore		
Min. Green:	7	7	7	7	7	7	7	7	7	7	7	7
Lanes:	1 1	1 0	1	0 0	0 0	0	1 0	2 0	1	1 0	4 0	1
Volume Module:												
Base Vol:	205	283	443	0	0	0	335	1053	249	109	1224	186
Growth Adj:	1.00	1.00	1.00	1.00	1.00	1.00	1.00	1.00	1.00	1.00	1.00	1.00
Initial Bse:	205	283	443	0	0	0	335	1053	249	109	1224	186
Added Vol:	0	0	0	0	0	0	0	0	0	0	0	0
PasserByVol:	0	0	0	0	0	0	0	0	0	0	0	0
Initial Fut:	205	283	443	0	0	0	335	1053	249	109	1224	186
User Adj:	1.00	1.00	1.00	1.00	1.00	1.00	1.00	1.00	1.00	1.00	1.00	0.00
PHF Adj:	1.00	1.00	1.00	1.00	1.00	1.00	1.00	1.00	1.00	1.00	1.00	0.00
PHF Volume:	205	283	443	0	0	0	335	1053	249	109	1224	0
Reduct Vol:	0	0	0	0	0	0	0	0	0	0	0	0
Reduced Vol:	205	283	443	0	0	0	335	1053	249	109	1224	0
PCE Adj:	1.00	1.00	1.00	1.00	1.00	1.00	1.00	1.00	1.00	1.00	1.00	0.00
MLF Adj:	1.00	1.00	1.00	1.00	1.00	1.00	1.00	1.00	1.00	1.00	1.00	0.00
FinalVolume:	205	283	443	0	0	0	335	1053	249	109	1224	0
Saturation Flow Module:												
Sat/Lane:	1900	1900	1900	1900	1900	1900	1900	1900	1900	1900	1900	1900
Adjustment:	0.92	0.92	0.85	1.00	1.00	1.00	0.95	0.95	0.85	0.95	0.91	1.00
Lanes:	1.26	1.74	1.00	0.00	0.00	0.00	1.00	2.00	1.00	1.00	4.00	1.00
Final Sat.:	2200	3037	1615	0	0	0	1805	3610	1615	1805	6916	1900
Capacity Analysis Module:												
Vol/Sat:	0.09	0.09	0.27	0.00	0.00	0.00	0.19	0.29	0.15	0.06	0.18	0.00
Crit Moves:			****				****				****	
Green/Cycle:	0.22	0.32	0.43	0.00	0.00	0.00	0.29	0.45	0.68	0.11	0.27	0.00
Volume/Cap:	0.42	0.29	0.64	0.00	0.00	0.00	0.64	0.64	0.23	0.55	0.64	0.00
Delay/Veh:	33.7	25.8	24.8	0.0	0.0	0.0	33.9	21.9	6.4	45.7	32.7	0.0
User DelAdj:	1.00	1.00	1.00	1.00	1.00	1.00	1.00	1.00	1.00	1.00	1.00	1.00
AdjDel/Veh:	33.7	25.8	24.8	0.0	0.0	0.0	33.9	21.9	6.4	45.7	32.7	0.0
LOS by Move:	C	C	C	A	A	A	C	C	A	D	C	A
HCM2kAvgQ:	5	4	11	0	0	0	10	14	3	4	10	0

Note: Queue reported is the number of cars per lane.

Traffix 7.9.0415 (c) 2007 Dowling Assoc. Licensed to MMA, LONG BEACH, CA

Overlook Parkway Extension
Ex Open + Alt3
PM Peak Hour

Level Of Service Computation Report
2000 HCM Operations Method (Future Volume Alternative)

Intersection #12 Victoria Ave/Arlington Ave

Cycle (sec):	100	Critical Vol./Cap.(X):	0.731
Loss Time (sec):	16 (Y+R=4.0 sec)	Average Delay (sec/veh):	30.4
Optimal Cycle:	74	Level Of Service:	C

Street Name:	Victoria Ave						Arlington Ave					
Approach:	North Bound			South Bound			East Bound			West Bound		
Movement:	L - T - R			L - T - R			L - T - R			L - T - R		
Control:	Protected			Protected			Protected			Protected		
Rights:	Ovl			Include			Include			Include		
Min. Green:	7	7	7	7	7	7	7	7	7	7	7	7
Lanes:	1 0	1 0	1	1 0	1 0	1	1 0	1 1	0	1 0	1 1	0
Volume Module:												
Base Vol:	34	145	414	55	232	123	62	1148	29	220	1037	19
Growth Adj:	1.00	1.00	1.00	1.00	1.00	1.00	1.00	1.00	1.00	1.00	1.00	1.00
Initial Bse:	34	145	414	55	232	123	62	1148	29	220	1037	19
Added Vol:	0	0	0	0	0	0	0	0	0	0	0	0
PasserByVol:	0	0	0	0	0	0	0	0	0	0	0	0
Initial Fut:	34	145	414	55	232	123	62	1148	29	220	1037	19
User Adj:	1.00	1.00	1.00	1.00	1.00	1.00	1.00	1.00	1.00	1.00	1.00	1.00
PHF Adj:	1.00	1.00	1.00	1.00	1.00	1.00	1.00	1.00	1.00	1.00	1.00	1.00
PHF Volume:	34	145	414	55	232	123	62	1148	29	220	1037	19
Reduct Vol:	0	0	0	0	0	0	0	0	0	0	0	0
Reduced Vol:	34	145	414	55	232	123	62	1148	29	220	1037	19
PCE Adj:	1.00	1.00	1.00	1.00	1.00	1.00	1.00	1.00	1.00	1.00	1.00	1.00
MLF Adj:	1.00	1.00	1.00	1.00	1.00	1.00	1.00	1.00	1.00	1.00	1.00	1.00
FinalVolume:	34	145	414	55	232	123	62	1148	29	220	1037	19
Saturation Flow Module:												
Sat/Lane:	1900	1900	1900	1900	1900	1900	1900	1900	1900	1900	1900	1900
Adjustment:	0.95	1.00	0.85	0.95	1.00	0.85	0.95	0.95	0.95	0.95	0.95	0.95
Lanes:	1.00	1.00	1.00	1.00	1.00	1.00	1.00	1.95	0.05	1.00	1.96	0.04
Final Sat.:	1805	1900	1615	1805	1900	1615	1805	3507	89	1805	3534	65
Capacity Analysis Module:												
Vol/Sat:	0.02	0.08	0.26	0.03	0.12	0.08	0.03	0.33	0.33	0.12	0.29	0.29
Crit Moves:			****	****				****		****		
Green/Cycle:	0.09	0.18	0.34	0.07	0.16	0.16	0.11	0.43	0.43	0.16	0.48	0.48
Volume/Cap:	0.21	0.43	0.76	0.44	0.78	0.48	0.30	0.76	0.76	0.76	0.61	0.61
Delay/Veh:	42.8	37.5	35.5	47.0	52.5	39.9	41.5	26.2	26.2	51.1	19.9	19.9
User DelAdj:	1.00	1.00	1.00	1.00	1.00	1.00	1.00	1.00	1.00	1.00	1.00	1.00
AdjDel/Veh:	42.8	37.5	35.5	47.0	52.5	39.9	41.5	26.2	26.2	51.1	19.9	19.9
LOS by Move:	D	D	D	D	D	D	D	C	C	D	B	B
HCM2kAvgQ:	1	4	13	2	9	4	2	17	17	8	13	13

Note: Queue reported is the number of cars per lane.

Traffix 7.9.0415 (c) 2007 Dowling Assoc. Licensed to MMA, LONG BEACH, CA

Overlook Parkway Extension
Ex Open + Alt3
PM Peak Hour

Level Of Service Computation Report
2000 HCM Operations Method (Future Volume Alternative)

Intersection #13 Alessandro Blvd/Arlington Ave

Cycle (sec):	100	Critical Vol./Cap.(X):	0.847
Loss Time (sec):	16 (Y+R=4.0 sec)	Average Delay (sec/veh):	37.8
Optimal Cycle:	99	Level Of Service:	D

Street Name:	Alessandro Blvd						Arlington Ave					
Approach:	North Bound			South Bound			East Bound			West Bound		
Movement:	L - T - R			L - T - R			L - T - R			L - T - R		
Control:	Protected			Protected			Protected			Protected		
Rights:	Ovl			Include			Ovl			Ovl		
Min. Green:	7	7	7	7	7	7	7	7	7	7	7	7
Lanes:	2 0	2 0	1	2 0	2 1	0	1 0	2 0	2	2 0	2 0	1
Volume Module:												
Base Vol:	652	603	151	409	1190	14	29	555	873	488	586	233
Growth Adj:	1.00	1.00	1.00	1.00	1.00	1.00	1.00	1.00	1.00	1.00	1.00	1.00
Initial Bse:	652	603	151	409	1190	14	29	555	873	488	586	233
Added Vol:	0	0	0	0	0	0	0	0	0	0	0	0
PasserByVol:	0	0	0	0	0	0	0	0	0	0	0	0
Initial Fut:	652	603	151	409	1190	14	29	555	873	488	586	233
User Adj:	1.00	1.00	1.00	1.00	1.00	1.00	1.00	1.00	1.00	1.00	1.00	1.00
PHF Adj:	1.00	1.00	1.00	1.00	1.00	1.00	1.00	1.00	1.00	1.00	1.00	1.00
PHF Volume:	652	603	151	409	1190	14	29	555	873	488	586	233
Reduct Vol:	0	0	0	0	0	0	0	0	0	0	0	0
Reduced Vol:	652	603	151	409	1190	14	29	555	873	488	586	233
PCE Adj:	1.00	1.00	1.00	1.00	1.00	1.00	1.00	1.00	1.00	1.00	1.00	1.00
MLF Adj:	1.00	1.00	1.00	1.00	1.00	1.00	1.00	1.00	1.00	1.00	1.00	1.00
FinalVolume:	652	603	151	409	1190	14	29	555	873	488	586	233
Saturation Flow Module:												
Sat/Lane:	1900	1900	1900	1900	1900	1900	1900	1900	1900	1900	1900	1900
Adjustment:	0.92	0.95	0.85	0.92	0.91	0.91	0.95	0.95	0.75	0.92	0.95	0.85
Lanes:	2.00	2.00	1.00	2.00	2.97	0.03	1.00	2.00	2.00	2.00	2.00	1.00
Final Sat.:	3502	3610	1615	3502	5116	60	1805	3610	2842	3502	3610	1615
Capacity Analysis Module:												
Vol/Sat:	0.19	0.17	0.09	0.12	0.23	0.23	0.02	0.15	0.31	0.14	0.16	0.14
Crit Moves:	****				****			****		****		
Green/Cycle:	0.22	0.29	0.46	0.20	0.27	0.27	0.10	0.18	0.40	0.16	0.24	0.44
Volume/Cap:	0.85	0.57	0.21	0.57	0.85	0.85	0.15	0.85	0.77	0.85	0.67	0.32
Delay/Veh:	46.1	31.0	16.5	37.1	39.3	39.3	41.2	49.7	29.0	51.8	36.4	18.3
User DelAdj:	1.00	1.00	1.00	1.00	1.00	1.00	1.00	1.00	1.00	1.00	1.00	1.00
AdjDel/Veh:	46.1	31.0	16.5	37.1	39.3	39.3	41.2	49.7	29.0	51.8	36.4	18.3
LOS by Move:	D	C	B	D	D	D	D	D	C	D	D	B
HCM2kAvgQ:	13	9	3	7	16	16	1	11	15	10	10	5

Note: Queue reported is the number of cars per lane.

Traffix 7.9.0415 (c) 2007 Dowling Assoc. Licensed to MMA, LONG BEACH, CA

Overlook Parkway Extension
Ex Open + Alt3
PM Peak Hour

Level Of Service Computation Report
2000 HCM Operations Method (Future Volume Alternative)

Intersection #14 Alessandro Blvd/Overlook Pkwy

Cycle (sec):	100	Critical Vol./Cap.(X):	1.364
Loss Time (sec):	16 (Y+R=4.0 sec)	Average Delay (sec/veh):	151.5
Optimal Cycle:	130	Level Of Service:	F

Street Name:	Alessandro Blvd						Overlook Pkwy					
Approach:	North Bound			South Bound			East Bound			West Bound		
Movement:	L -	T -	R	L -	T -	R	L -	T -	R	L -	T -	R
Control:	Protected			Protected			Protected			Protected		
Rights:	Include			Include			Include			Include		
Min. Green:	7	7	7	7	7	7	7	7	7	7	7	7
Lanes:	1 0	3 0	1	1 0	2 1	0	1 0	1 1	0	3 0	0 1	0
Volume Module:												
Base Vol:	225	1106	405	14	2472	158	47	74	628	567	164	6
Growth Adj:	1.00	1.00	1.00	1.00	1.00	1.00	1.00	1.00	1.00	1.00	1.00	1.00
Initial Bse:	225	1106	405	14	2472	158	47	74	628	567	164	6
Added Vol:	0	0	0	0	0	0	0	0	0	0	0	0
PasserByVol:	0	0	0	0	0	0	0	0	0	0	0	0
Initial Fut:	225	1106	405	14	2472	158	47	74	628	567	164	6
User Adj:	1.00	1.00	1.00	1.00	1.00	1.00	1.00	1.00	1.00	1.00	1.00	1.00
PHF Adj:	1.00	1.00	1.00	1.00	1.00	1.00	1.00	1.00	1.00	1.00	1.00	1.00
PHF Volume:	225	1106	405	14	2472	158	47	74	628	567	164	6
Reduct Vol:	0	0	0	0	0	0	0	0	0	0	0	0
Reduced Vol:	225	1106	405	14	2472	158	47	74	628	567	164	6
PCE Adj:	1.00	1.00	1.00	1.00	1.00	1.00	1.00	1.00	1.00	1.00	1.00	1.00
MLF Adj:	1.00	1.00	1.00	1.00	1.00	1.00	1.00	1.00	1.00	1.00	1.00	1.00
FinalVolume:	225	1106	405	14	2472	158	47	74	628	567	164	6
Saturation Flow Module:												
Sat/Lane:	1900	1900	1900	1900	1900	1900	1900	1900	1900	1900	1900	1900
Adjustment:	0.95	0.91	0.85	0.95	0.90	0.90	0.95	0.82	0.82	0.92	1.00	1.00
Lanes:	1.00	3.00	1.00	1.00	2.82	0.18	1.00	1.00	1.00	3.00	0.96	0.04
Final Sat.:	1805	5187	1615	1805	4832	309	1805	1563	1563	5253	1824	67
Capacity Analysis Module:												
Vol/Sat:	0.12	0.21	0.25	0.01	0.51	0.51	0.03	0.05	0.40	0.11	0.09	0.09
Crit Moves:	****				****				****	****		
Green/Cycle:	0.09	0.36	0.36	0.10	0.38	0.38	0.16	0.29	0.29	0.08	0.21	0.21
Volume/Cap:	1.36	0.58	0.69	0.08	1.36	1.36	0.16	0.16	1.36	1.36	0.43	0.43
Delay/Veh:	243.2	26.1	30.4	40.8	199	198.6	36.2	26.1	211.4	224.8	35.0	35.0
User DelAdj:	1.00	1.00	1.00	1.00	1.00	1.00	1.00	1.00	1.00	1.00	1.00	1.00
AdjDel/Veh:	243.2	26.1	30.4	40.8	199	198.6	36.2	26.1	211.4	224.8	35.0	35.0
LOS by Move:	F	C	C	D	F	F	D	C	F	F	D	D
HCM2kAvgQ:	17	10	12	0	62	62	1	2	44	15	5	5

Note: Queue reported is the number of cars per lane.

Traffix 7.9.0415 (c) 2007 Dowling Assoc. Licensed to MMA, LONG BEACH, CA

Overlook Parkway Extension
Ex Open + Alt3
PM Peak Hour

Level Of Service Computation Report
2000 HCM Operations Method (Future Volume Alternative)

Intersection #15 Alessandro Blvd/Trautwein Rd

Cycle (sec):	100	Critical Vol./Cap.(X):	0.696
Loss Time (sec):	12 (Y+R=4.0 sec)	Average Delay (sec/veh):	20.4
Optimal Cycle:	59	Level Of Service:	C

Street Name:	Alessandro Blvd						Trautwein Rd					
Approach:	North Bound			South Bound			East Bound			West Bound		
Movement:	L -	T -	R	L -	T -	R	L -	T -	R	L -	T -	R
Control:	Protected			Protected			Protected			Protected		
Rights:	Include			Ignore			Ignore			Include		
Min. Green:	7	7	7	7	7	7	7	7	7	7	7	7
Lanes:	2 0	3 0	0	0 0	3 0	1	3 0	0 0	1	0 0	0 0	0
Volume Module:												
Base Vol:	210	1226	0	0	2170	1226	705	0	158	0	0	0
Growth Adj:	1.00	1.00	1.00	1.00	1.00	1.00	1.00	1.00	1.00	1.00	1.00	1.00
Initial Bse:	210	1226	0	0	2170	1226	705	0	158	0	0	0
Added Vol:	0	0	0	0	0	0	0	0	0	0	0	0
PasserByVol:	0	0	0	0	0	0	0	0	0	0	0	0
Initial Fut:	210	1226	0	0	2170	1226	705	0	158	0	0	0
User Adj:	1.00	1.00	1.00	1.00	1.00	0.00	1.00	1.00	0.00	1.00	1.00	1.00
PHF Adj:	1.00	1.00	1.00	1.00	1.00	0.00	1.00	1.00	0.00	1.00	1.00	1.00
PHF Volume:	210	1226	0	0	2170	0	705	0	0	0	0	0
Reduct Vol:	0	0	0	0	0	0	0	0	0	0	0	0
Reduced Vol:	210	1226	0	0	2170	0	705	0	0	0	0	0
PCE Adj:	1.00	1.00	1.00	1.00	1.00	0.00	1.00	1.00	0.00	1.00	1.00	1.00
MLF Adj:	1.00	1.00	1.00	1.00	1.00	0.00	1.00	1.00	0.00	1.00	1.00	1.00
FinalVolume:	210	1226	0	0	2170	0	705	0	0	0	0	0
Saturation Flow Module:												
Sat/Lane:	1900	1900	1900	1900	1900	1900	1900	1900	1900	1900	1900	1900
Adjustment:	0.92	0.91	1.00	1.00	0.91	1.00	0.92	1.00	1.00	1.00	1.00	1.00
Lanes:	2.00	3.00	0.00	0.00	3.00	1.00	3.00	0.00	1.00	0.00	0.00	0.00
Final Sat.:	3502	5187	0	0	5187	1900	5253	0	1900	0	0	0
Capacity Analysis Module:												
Vol/Sat:	0.06	0.24	0.00	0.00	0.42	0.00	0.13	0.00	0.00	0.00	0.00	0.00
Crit Moves:	****				****		****					
Green/Cycle:	0.09	0.53	0.00	0.00	0.60	0.00	0.19	0.00	0.00	0.00	0.00	0.00
Volume/Cap:	0.70	0.45	0.00	0.00	0.70	0.00	0.70	0.00	0.00	0.00	0.00	0.00
Delay/Veh:	51.4	14.6	0.0	0.0	14.4	0.0	39.8	0.0	0.0	0.0	0.0	0.0
User DelAdj:	1.00	1.00	1.00	1.00	1.00	1.00	1.00	1.00	1.00	1.00	1.00	1.00
AdjDel/Veh:	51.4	14.6	0.0	0.0	14.4	0.0	39.8	0.0	0.0	0.0	0.0	0.0
LOS by Move:	D	B	A	A	B	A	D	A	A	A	A	A
HCM2kAvgQ:	5	8	0	0	17	0	8	0	0	0	0	0

Note: Queue reported is the number of cars per lane.

Traffix 7.9.0415 (c) 2007 Dowling Assoc. Licensed to MMA, LONG BEACH, CA

Overlook Parkway Extension
Ex Open + Alt3
PM Peak Hour

Level Of Service Computation Report
2000 HCM 4-Way Stop Method (Future Volume Alternative)

Intersection #16 Crystal View Ter/Overlook Pkwy

Cycle (sec):	100	Critical Vol./Cap.(X):	0.581
Loss Time (sec):	0 (Y+R=4.0 sec)	Average Delay (sec/veh):	13.7
Optimal Cycle:	0	Level Of Service:	B

Street Name:	Crystal View Ter							Overlook Pkwy					
Approach:	North Bound			South Bound			East Bound			West Bound			
Movement:	L	- T	- R	L	- T	- R	L	- T	- R	L	- T	- R	
Control:	Stop Sign			Stop Sign			Stop Sign			Stop Sign			
Rights:	Include			Include			Include			Include			
Min. Green:	7	7	7	7	7	7	7	7	7	7	7	7	
Lanes:	0 0	1! 0	0	0 0	1 0	0	1 0	1 1	0	1 0	1 1	0	
Volume Module:													
Base Vol:	31	0	37	0	2	0	1	709	72	14	592	0	
Growth Adj:	1.00	1.00	1.00	1.00	1.00	1.00	1.00	1.00	1.00	1.00	1.00	1.00	
Initial Bse:	31	0	37	0	2	0	1	709	72	14	592	0	
Added Vol:	0	0	0	0	0	0	0	0	0	0	0	0	
PasserByVol:	0	0	0	0	0	0	0	0	0	0	0	0	
Initial Fut:	31	0	37	0	2	0	1	709	72	14	592	0	
User Adj:	1.00	1.00	1.00	1.00	1.00	1.00	1.00	1.00	1.00	1.00	1.00	1.00	
PHF Adj:	1.00	1.00	1.00	1.00	1.00	1.00	1.00	1.00	1.00	1.00	1.00	1.00	
PHF Volume:	31	0	37	0	2	0	1	709	72	14	592	0	
Reduct Vol:	0	0	0	0	0	0	0	0	0	0	0	0	
Reduced Vol:	31	0	37	0	2	0	1	709	72	14	592	0	
PCE Adj:	1.00	1.00	1.00	1.00	1.00	1.00	1.00	1.00	1.00	1.00	1.00	1.00	
MLF Adj:	1.00	1.00	1.00	1.00	1.00	1.00	1.00	1.00	1.00	1.00	1.00	1.00	
FinalVolume:	31	0	37	0	2	0	1	709	72	14	592	0	
Saturation Flow Module:													
Adjustment:	1.00	1.00	1.00	1.00	1.00	1.00	1.00	1.00	1.00	1.00	1.00	1.00	
Lanes:	0.46	0.00	0.54	0.00	1.00	0.00	1.00	1.82	0.18	1.00	2.00	0.00	
Final Sat.:	256	0	305	0	513	0	604	1220	126	582	1279	0	
Capacity Analysis Module:													
Vol/Sat:	0.12	xxxx	0.12	xxxx	0.00	xxxx	0.00	0.58	0.57	0.02	0.46	xxxx	
Crit Moves:			****		****			****			****		
Delay/Veh:	9.8	0.0	9.8	0.0	9.5	0.0	8.6	14.9	14.5	8.9	12.8	0.0	
Delay Adj:	1.00	1.00	1.00	1.00	1.00	1.00	1.00	1.00	1.00	1.00	1.00	1.00	
AdjDel/Veh:	9.8	0.0	9.8	0.0	9.5	0.0	8.6	14.9	14.5	8.9	12.8	0.0	
LOS by Move:	A	*	A	*	A	*	A	B	B	A	B	*	
ApproachDel:	9.8				9.5			14.8			12.7		
Delay Adj:	1.00				1.00			1.00			1.00		
ApprAdjDel:	9.8				9.5			14.8			12.7		
LOS by Appr:	A				A			B			B		
AllWayAvgQ:	0.1	0.1	0.1	0.0	0.0	0.0	0.0	1.3	1.2	0.0	0.8	0.8	

Traffix 7.9.0415 (c) 2007 Dowling Assoc. Licensed to MMA, LONG BEACH, CA

Overlook Parkway Extension
Ex Open + Alt3
PM Peak Hour

Note: Queue reported is the number of cars per lane.

Traffix 7.9.0415 (c) 2007 Dowling Assoc. Licensed to MMA, LONG BEACH, CA

Overlook Parkway Extension
Ex Open + Alt3
PM Peak Hour

Level Of Service Computation Report
2000 HCM Unsignalized Method (Future Volume Alternative)

Intersection #17 Kingdom Dr/Overlook Pkwy

Average Delay (sec/veh): 0.6 Worst Case Level Of Service: C[22.4]

Street Name:	Kingdom Dr									Overlook Pkwy								
Approach:	North Bound				South Bound				East Bound				West Bound					
Movement:	L	-	T	-	R	L	-	T	-	R	L	-	T	-	R	L	-	T	-	R
Control:	Stop Sign					Stop Sign					Uncontrolled					Uncontrolled				
Rights:	Include					Include					Include					Include				
Lanes:	0	0	1!	0	0	1	0	0	0	0	1	0	1	1	0	1	0	1	1	0
Volume Module:																				
Base Vol:	4	0	33		4	0		0		0	674		4		27	534		2		
Growth Adj:	1.00	1.00	1.00		1.00	1.00		1.00		1.00	1.00		1.00		1.00	1.00		1.00		
Initial Bse:	4	0	33		4	0		0		0	674		4		27	534		2		
Added Vol:	0	0	0		0	0		0		0	0		0		0	0		0		
PasserByVol:	0	0	0		0	0		0		0	0		0		0	0		0		
Initial Fut:	4	0	33		4	0		0		0	674		4		27	534		2		
User Adj:	1.00	1.00	1.00		1.00	1.00		1.00		1.00	1.00		1.00		1.00	1.00		1.00		
PHF Adj:	1.00	1.00	1.00		1.00	1.00		1.00		1.00	1.00		1.00		1.00	1.00		1.00		
PHF Volume:	4	0	33		4	0		0		0	674		4		27	534		2		
Reduct Vol:	0	0	0		0	0		0		0	0		0		0	0		0		
FinalVolume:	4	0	33		4	0		0		0	674		4		27	534		2		
Critical Gap Module:																				
Critical Gp:	7.5	6.5	6.9		7.5	xxxx	xxxxx	xxxxx	xxxx	xxxxx	4.1	xxxx	xxxxx							
FollowUpTim:	3.5	4.0	3.3		3.5	xxxx	xxxxx	xxxxx	xxxx	xxxxx	2.2	xxxx	xxxxx							
Capacity Module:																				
Cnflict Vol:	997	1266	339		926	xxxx	xxxxx	xxxx	xxxx	xxxxx	678	xxxx	xxxxx							
Potent Cap.:	201	171	663		227	xxxx	xxxxx	xxxx	xxxx	xxxxx	923	xxxx	xxxxx							
Move Cap.:	197	166	663		211	xxxx	xxxxx	xxxx	xxxx	xxxxx	923	xxxx	xxxxx							
Volume/Cap:	0.02	0.00	0.05		0.02	xxxx	xxxx	xxxx	xxxx	xxxx	0.03	xxxx	xxxx							
Level Of Service Module:																				
2Way95thQ:	xxxx	xxxx	xxxxx		0.1	xxxx	xxxxx	xxxx	xxxx	xxxxx	0.1	xxxx	xxxxx							
Control Del:	xxxxx	xxxx	xxxxx		22.4	xxxx	xxxxx	xxxxx	xxxx	xxxxx	9.0	xxxx	xxxxx							
LOS by Move:	*	*	*		C	*	*	*	*	*	A	*	*							
Movement:	LT	-	LTR	-	RT	LT	-	LTR	-	RT	LT	-	LTR	-	RT					
Shared Cap.:	xxxx		528	xxxxx		xxxx	xxxx	xxxxx	xxxx	xxxx	xxxxx	xxxx	xxxx	xxxxx						
SharedQueue:	xxxxx		0.2	xxxxx		xxxxx	xxxx	xxxxx	xxxxx	xxxx	xxxxx	xxxxx	xxxx	xxxxx						
Shrd ConDel:	xxxxx		12.3	xxxxx		xxxxx	xxxx	xxxxx	xxxxx	xxxx	xxxxx	xxxxx	xxxx	xxxxx						
Shared LOS:	*		B	*		*	*	*	*	*	*	*	*							
ApproachDel:			12.3					22.4			xxxxxx					xxxxxx				
ApproachLOS:			B					C			*					*				

Note: Queue reported is the number of cars per lane.

Overlook Parkway Extension
Ex Open + Alt3
PM Peak Hour

Level Of Service Computation Report
2000 HCM Unsignalized Method (Future Volume Alternative)

Intersection #18 Kingdom Dr/Green Orchard Pl

Average Delay (sec/veh): 1.3 Worst Case Level Of Service: A[9.2]

Street Name:	Kingdom Dr									Green Orchard Pl								
Approach:	North Bound				South Bound				East Bound				West Bound					
Movement:	L	-	T	-	R	L	-	T	-	R	L	-	T	-	R	L	-	T	-	R
Control:	Uncontrolled					Uncontrolled					Stop Sign					Stop Sign				
Rights:	Include					Include					Include					Include				
Lanes:	0	0	0	1	0	0	0	1	0	0	0	0	0	0	0	1	0	0	0	0
Volume Module:																				
Base Vol:	0	38	18		0	72		0		0	0		0		22	0		0		
Growth Adj:	1.00	1.00	1.00		1.00	1.00		1.00		1.00	1.00		1.00		1.00	1.00		1.00		
Initial Bse:	0	38	18		0	72		0		0	0		0		22	0		0		
Added Vol:	0	0	0		0	0		0		0	0		0		0	0		0		
PasserByVol:	0	0	0		0	0		0		0	0		0		0	0		0		
Initial Fut:	0	38	18		0	72		0		0	0		0		22	0		0		
User Adj:	1.00	1.00	1.00		1.00	1.00		1.00		1.00	1.00		1.00		1.00	1.00		1.00		
PHF Adj:	1.00	1.00	1.00		1.00	1.00		1.00		1.00	1.00		1.00		1.00	1.00		1.00		
PHF Volume:	0	38	18		0	72		0		0	0		0		22	0		0		
Reduct Vol:	0	0	0		0	0		0		0	0		0		0	0		0		
FinalVolume:	0	38	18		0	72		0		0	0		0		22	0		0		
Critical Gap Module:																				
Critical Gp:	xxxxx	xxxx	xxxxx		xxxxx	xxxx	xxxxx	xxxxx	xxxx	xxxxx	6.4	xxxx	xxxxx							
FollowUpTim:	xxxxx	xxxx	xxxxx		xxxxx	xxxx	xxxxx	xxxxx	xxxx	xxxxx	3.5	xxxx	xxxxx							
Capacity Module:																				
Cnflict Vol:	xxxx	xxxx	xxxxx		xxxx	xxxx	xxxxx	xxxx	xxxx	xxxxx	119	xxxx	xxxxx							
Potent Cap.:	xxxx	xxxx	xxxxx		xxxx	xxxx	xxxxx	xxxx	xxxx	xxxxx	882	xxxx	xxxxx							
Move Cap.:	xxxx	xxxx	xxxxx		xxxx	xxxx	xxxxx	xxxx	xxxx	xxxxx	882	xxxx	xxxxx							
Volume/Cap:	xxxx	xxxx	xxxx		xxxx	xxxx	xxxx	xxxx	xxxx	xxxx	0.02	xxxx	xxxx							
Level Of Service Module:																				
2Way95thQ:	xxxx	xxxx	xxxxx		xxxx	xxxx	xxxxx	xxxx	xxxx	xxxxx	0.1	xxxx	xxxxx							
Control Del:	xxxxx	xxxx	xxxxx		xxxxx	xxxx	xxxxx	xxxxx	xxxx	xxxxx	9.2	xxxx	xxxxx							
LOS by Move:	*	*	*		*	*	*	*	*	*	A	*	*							
Movement:	LT	-	LTR	-	RT	LT	-	LTR	-	RT	LT	-	LTR	-	RT					
Shared Cap.:	xxxx	xxxx	xxxxx		xxxx	xxxx	xxxxx	xxxx	xxxx	xxxxx	xxxx	xxxx	xxxxx							
SharedQueue:	xxxxx	xxxx	xxxxx		xxxxx	xxxx	xxxxx	xxxxx	xxxx	xxxxx	xxxxx	xxxx	xxxxx							
Shrd ConDel:	xxxxx	xxxx	xxxxx		xxxxx	xxxx	xxxxx	xxxxx	xxxx	xxxxx	xxxxx	xxxx	xxxxx							
Shared LOS:	*	*	*		*	*	*	*	*	*	*	*	*							
ApproachDel:			xxxxxx					xxxxxx					xxxxxx					9.2		
ApproachLOS:			*					*					*					A		

Note: Queue reported is the number of cars per lane.

Overlook Parkway Extension
Ex Open + Alt3
PM Peak Hour

Level Of Service Computation Report
2000 HCM Operations Method (Future Volume Alternative)

Intersection #19 Trautwein Rd/John F. Kennedy Dr

Cycle (sec):	100	Critical Vol./Cap.(X):	0.581
Loss Time (sec):	16 (Y+R=4.0 sec)	Average Delay (sec/veh):	17.5
Optimal Cycle:	55	Level Of Service:	B

Street Name:	Trautwein Rd						John F. Kennedy Dr					
Approach:	North Bound			South Bound			East Bound			West Bound		
Movement:	L -	T -	R	L -	T -	R	L -	T -	R	L -	T -	R
Control:	Protected			Protected			Protected			Protected		
Rights:	Include			Ovl			Include			Include		
Min. Green:	7	7	7	7	7	7	7	7	7	7	7	7
Lanes:	1 0	2 0	1	1 0	2 0	1	2 0	1 0	1	1 0	0 1	0
Volume Module:												
Base Vol:	36	837	38	39	1374	409	222	19	46	29	23	20
Growth Adj:	1.00	1.00	1.00	1.00	1.00	1.00	1.00	1.00	1.00	1.00	1.00	1.00
Initial Bse:	36	837	38	39	1374	409	222	19	46	29	23	20
Added Vol:	0	0	0	0	0	0	0	0	0	0	0	0
PasserByVol:	0	0	0	0	0	0	0	0	0	0	0	0
Initial Fut:	36	837	38	39	1374	409	222	19	46	29	23	20
User Adj:	1.00	1.00	1.00	1.00	1.00	1.00	1.00	1.00	1.00	1.00	1.00	1.00
PHF Adj:	1.00	1.00	1.00	1.00	1.00	1.00	1.00	1.00	1.00	1.00	1.00	1.00
PHF Volume:	36	837	38	39	1374	409	222	19	46	29	23	20
Reduct Vol:	0	0	0	0	0	0	0	0	0	0	0	0
Reduced Vol:	36	837	38	39	1374	409	222	19	46	29	23	20
PCE Adj:	1.00	1.00	1.00	1.00	1.00	1.00	1.00	1.00	1.00	1.00	1.00	1.00
MLF Adj:	1.00	1.00	1.00	1.00	1.00	1.00	1.00	1.00	1.00	1.00	1.00	1.00
FinalVolume:	36	837	38	39	1374	409	222	19	46	29	23	20
Saturation Flow Module:												
Sat/Lane:	1900	1900	1900	1900	1900	1900	1900	1900	1900	1900	1900	1900
Adjustment:	0.95	0.95	0.85	0.95	0.95	0.85	0.92	1.00	0.85	0.95	0.93	0.93
Lanes:	1.00	2.00	1.00	1.00	2.00	1.00	2.00	1.00	1.00	1.00	0.53	0.47
Final Sat.:	1805	3610	1615	1805	3610	1615	3502	1900	1615	1805	945	822
Capacity Analysis Module:												
Vol/Sat:	0.02	0.23	0.02	0.02	0.38	0.25	0.06	0.01	0.03	0.02	0.02	0.02
Crit Moves:	****				****		****				****	
Green/Cycle:	0.07	0.51	0.51	0.16	0.60	0.70	0.10	0.08	0.08	0.08	0.07	0.07
Volume/Cap:	0.28	0.45	0.05	0.14	0.63	0.36	0.63	0.12	0.34	0.19	0.35	0.35
Delay/Veh:	45.4	15.5	12.1	36.7	13.5	6.2	47.0	42.6	44.5	43.1	46.0	46.0
User DelAdj:	1.00	1.00	1.00	1.00	1.00	1.00	1.00	1.00	1.00	1.00	1.00	1.00
AdjDel/Veh:	45.4	15.5	12.1	36.7	13.5	6.2	47.0	42.6	44.5	43.1	46.0	46.0
LOS by Move:	D	B	B	D	B	A	D	D	D	D	D	D
HCM2kAvgQ:	1	9	1	1	15	5	5	1	2	1	2	2

Note: Queue reported is the number of cars per lane.

Traffix 7.9.0415 (c) 2007 Dowling Assoc. Licensed to MMA, LONG BEACH, CA

Overlook Parkway Extension
Ex Open + Alt3
PM Peak Hour

Level Of Service Computation Report
2000 HCM Operations Method (Future Volume Alternative)

Intersection #20 Washington St/Bradley St

Cycle (sec):	100	Critical Vol./Cap.(X):	0.593
Loss Time (sec):	12 (Y+R=4.0 sec)	Average Delay (sec/veh):	25.3
Optimal Cycle:	50	Level Of Service:	C

Street Name:	Washington St						Bradley St					
Approach:	North Bound			South Bound			East Bound			West Bound		
Movement:	L -	T -	R	L -	T -	R	L -	T -	R	L -	T -	R
Control:	Protected			Protected			Permitted			Permitted		
Rights:	Include			Include			Include			Include		
Min. Green:	7	7	7	7	7	7	7	7	7	7	7	7
Lanes:	1 0	1 0	1	1 0	0 1	0	0 0	1! 0	0	0 0	1! 0	0
Volume Module:												
Base Vol:	89	325	18	54	550	1	3	28	274	16	17	26
Growth Adj:	1.00	1.00	1.00	1.00	1.00	1.00	1.00	1.00	1.00	1.00	1.00	1.00
Initial Bse:	89	325	18	54	550	1	3	28	274	16	17	26
Added Vol:	0	0	0	0	0	0	0	0	0	0	0	0
PasserByVol:	0	0	0	0	0	0	0	0	0	0	0	0
Initial Fut:	89	325	18	54	550	1	3	28	274	16	17	26
User Adj:	1.00	1.00	1.00	1.00	1.00	1.00	1.00	1.00	1.00	1.00	1.00	1.00
PHF Adj:	1.00	1.00	1.00	1.00	1.00	1.00	1.00	1.00	1.00	1.00	1.00	1.00
PHF Volume:	89	325	18	54	550	1	3	28	274	16	17	26
Reduct Vol:	0	0	0	0	0	0	0	0	0	0	0	0
Reduced Vol:	89	325	18	54	550	1	3	28	274	16	17	26
PCE Adj:	1.00	1.00	1.00	1.00	1.00	1.00	1.00	1.00	1.00	1.00	1.00	1.00
MLF Adj:	1.00	1.00	1.00	1.00	1.00	1.00	1.00	1.00	1.00	1.00	1.00	1.00
FinalVolume:	89	325	18	54	550	1	3	28	274	16	17	26
Saturation Flow Module:												
Sat/Lane:	1900	1900	1900	1900	1900	1900	1900	1900	1900	1900	1900	1900
Adjustment:	0.95	1.00	0.85	0.95	1.00	1.00	0.88	0.88	0.88	0.84	0.84	0.84
Lanes:	1.00	1.00	1.00	1.00	0.99	0.01	0.01	0.09	0.90	0.27	0.29	0.44
Final Sat.:	1805	1900	1615	1805	1897	3	16	153	1499	433	461	704
Capacity Analysis Module:												
Vol/Sat:	0.05	0.17	0.01	0.03	0.29	0.29	0.18	0.18	0.18	0.04	0.04	0.04
Crit Moves:	****				****			****				
Green/Cycle:	0.08	0.41	0.41	0.17	0.49	0.49	0.31	0.31	0.31	0.31	0.31	0.31
Volume/Cap:	0.59	0.42	0.03	0.18	0.59	0.59	0.59	0.59	0.59	0.12	0.12	0.12
Delay/Veh:	50.5	21.7	17.9	36.1	19.4	19.4	31.2	31.2	31.2	25.0	25.0	25.0
User DelAdj:	1.00	1.00	1.00	1.00	1.00	1.00	1.00	1.00	1.00	1.00	1.00	1.00
AdjDel/Veh:	50.5	21.7	17.9	36.1	19.4	19.4	31.2	31.2	31.2	25.0	25.0	25.0
LOS by Move:	D	C	B	D	B	B	C	C	C	C	C	C
HCM2kAvgQ:	4	7	0	2	12	12	9	9	9	1	1	1

Note: Queue reported is the number of cars per lane.

Traffix 7.9.0415 (c) 2007 Dowling Assoc. Licensed to MMA, LONG BEACH, CA

Overlook Parkway Extension
Ex Open + Alt3
PM Peak Hour

Level Of Service Computation Report
2000 HCM Operations Method (Future Volume Alternative)

Intersection #21 Alessandro Blvd/Via Vista Dr

Cycle (sec):	100	Critical Vol./Cap.(X):	0.731
Loss Time (sec):	16 (Y+R=4.0 sec)	Average Delay (sec/veh):	17.4
Optimal Cycle:	74	Level Of Service:	B

Street Name:	Alessandro Blvd								Via Vista Dr					
Approach:	North Bound			South Bound			East Bound			West Bound				
Movement:	L -	T -	R	L -	T -	R	L -	T -	R	L -	T -	R		
Control:	Protected			Protected			Protected			Protected				
Rights:	Include			Include			Include			Include				
Min. Green:	7	7	7	7	7	7	7	7	7	7	7	7		
Lanes:	1 0	2 1	0	1 0	2 1	0	1 0	1 0	1	1 0	1 0	1		
Volume Module:														
Base Vol:	63	1193	25	62	2546	61	17	19	50	80	22	24		
Growth Adj:	1.00	1.00	1.00	1.00	1.00	1.00	1.00	1.00	1.00	1.00	1.00	1.00		
Initial Bse:	63	1193	25	62	2546	61	17	19	50	80	22	24		
Added Vol:	0	0	0	0	0	0	0	0	0	0	0	0		
PasserByVol:	0	0	0	0	0	0	0	0	0	0	0	0		
Initial Fut:	63	1193	25	62	2546	61	17	19	50	80	22	24		
User Adj:	1.00	1.00	1.00	1.00	1.00	1.00	1.00	1.00	1.00	1.00	1.00	1.00		
PHF Adj:	1.00	1.00	1.00	1.00	1.00	1.00	1.00	1.00	1.00	1.00	1.00	1.00		
PHF Volume:	63	1193	25	62	2546	61	17	19	50	80	22	24		
Reduct Vol:	0	0	0	0	0	0	0	0	0	0	0	0		
Reduced Vol:	63	1193	25	62	2546	61	17	19	50	80	22	24		
PCE Adj:	1.00	1.00	1.00	1.00	1.00	1.00	1.00	1.00	1.00	1.00	1.00	1.00		
MLF Adj:	1.00	1.00	1.00	1.00	1.00	1.00	1.00	1.00	1.00	1.00	1.00	1.00		
FinalVolume:	63	1193	25	62	2546	61	17	19	50	80	22	24		
Saturation Flow Module:														
Sat/Lane:	1900	1900	1900	1900	1900	1900	1900	1900	1900	1900	1900	1900		
Adjustment:	0.95	0.91	0.91	0.95	0.91	0.91	0.95	1.00	0.85	0.95	1.00	0.85		
Lanes:	1.00	2.94	0.06	1.00	2.93	0.07	1.00	1.00	1.00	1.00	1.00	1.00		
Final Sat.:	1805	5065	106	1805	5050	121	1805	1900	1615	1805	1900	1615		
Capacity Analysis Module:														
Vol/Sat:	0.03	0.24	0.24	0.03	0.50	0.50	0.01	0.01	0.03	0.04	0.01	0.01		
Crit Moves:	****				****				****	****				
Green/Cycle:	0.07	0.54	0.54	0.16	0.63	0.63	0.07	0.07	0.07	0.07	0.07	0.07		
Volume/Cap:	0.50	0.44	0.44	0.21	0.80	0.80	0.13	0.14	0.44	0.63	0.17	0.21		
Delay/Veh:	47.9	14.0	14.0	36.9	15.3	15.3	44.1	44.2	47.4	55.3	44.3	44.8		
User DelAdj:	1.00	1.00	1.00	1.00	1.00	1.00	1.00	1.00	1.00	1.00	1.00	1.00		
AdjDel/Veh:	47.9	14.0	14.0	36.9	15.3	15.3	44.1	44.2	47.4	55.3	44.3	44.8		
LOS by Move:	D	B	B	D	B	B	D	D	D	E	D	D		
HCM2kAvgQ:	3	8	8	2	23	23	1	1	2	4	1	1		

Note: Queue reported is the number of cars per lane.

Traffix 7.9.0415 (c) 2007 Dowling Assoc. Licensed to MMA, LONG BEACH, CA

Overlook Parkway Extension
Ex Open + Alt3
PM Peak Hour

Level Of Service Computation Report
2000 HCM 4-Way Stop Method (Future Volume Alternative)

Intersection #23 Mary St/Hawarden Dr

Cycle (sec):	100	Critical Vol./Cap.(X):	0.417
Loss Time (sec):	0 (Y+R=4.0 sec)	Average Delay (sec/veh):	9.1
Optimal Cycle:	0	Level Of Service:	A

Street Name:	Mary St								Hawarden Dr					
Approach:	North Bound			South Bound			East Bound			West Bound				
Movement:	L -	T -	R	L -	T -	R	L -	T -	R	L -	T -	R		
Control:	Stop Sign			Stop Sign			Stop Sign			Stop Sign				
Rights:	Include			Include			Include			Include				
Min. Green:	7	7	7	7	7	7	7	7	7	7	7	7		
Lanes:	0 1	0 0	0	0 0	0 1	0	0 0	1! 0	0	0 0	0 0	0		
Volume Module:														
Base Vol:	4	33	0	0	184	217	37	0	5	0	0	0		
Growth Adj:	1.00	1.00	1.00	1.00	1.00	1.00	1.00	1.00	1.00	1.00	1.00	1.00		
Initial Bse:	4	33	0	0	184	217	37	0	5	0	0	0		
Added Vol:	0	0	0	0	0	0	0	0	0	0	0	0		
PasserByVol:	0	0	0	0	0	0	0	0	0	0	0	0		
Initial Fut:	4	33	0	0	184	217	37	0	5	0	0	0		
User Adj:	1.00	1.00	1.00	1.00	1.00	1.00	1.00	1.00	1.00	1.00	1.00	1.00		
PHF Adj:	1.00	1.00	1.00	1.00	1.00	1.00	1.00	1.00	1.00	1.00	1.00	1.00		
PHF Volume:	4	33	0	0	184	217	37	0	5	0	0	0		
Reduct Vol:	0	0	0	0	0	0	0	0	0	0	0	0		
Reduced Vol:	4	33	0	0	184	217	37	0	5	0	0	0		
PCE Adj:	1.00	1.00	1.00	1.00	1.00	1.00	1.00	1.00	1.00	1.00	1.00	1.00		
MLF Adj:	1.00	1.00	1.00	1.00	1.00	1.00	1.00	1.00	1.00	1.00	1.00	1.00		
FinalVolume:	4	33	0	0	184	217	37	0	5	0	0	0		
Saturation Flow Module:														
Adjustment:	1.00	1.00	1.00	1.00	1.00	1.00	1.00	1.00	1.00	1.00	1.00	1.00		
Lanes:	0.11	0.89	0.00	0.00	0.46	0.54	0.88	0.00	0.12	0.00	0.00	0.00		
Final Sat.:	87	719	0	0	442	521	610	0	82	0	0	0		
Capacity Analysis Module:														
Vol/Sat:	0.05	0.05	xxxx	xxxx	0.42	0.42	0.06	xxxx	0.06	xxxx	xxxx	xxxx		
Crit Moves:		****			****		****							
Delay/Veh:	7.6	7.6	0.0	0.0	9.3	9.3	8.1	0.0	8.1	0.0	0.0	0.0		
Delay Adj:	1.00	1.00	1.00	1.00	1.00	1.00	1.00	1.00	1.00	1.00	1.00	1.00		
AdjDel/Veh:	7.6	7.6	0.0	0.0	9.3	9.3	8.1	0.0	8.1	0.0	0.0	0.0		
LOS by Move:	A	A	*	*	A	A	A	*	A	*	*	*		
ApproachDel:	7.6				9.3		8.1			xxxxxx				
Delay Adj:	1.00				1.00		1.00			xxxxx				
ApprAdjDel:	7.6				9.3		8.1			xxxxxx				
LOS by Appr:	A				A		A			*				
AllWayAvgQ:	0.0	0.0	0.0	0.7	0.7	0.7	0.1	0.1	0.1	0.0	0.0	0.0		

Traffix 7.9.0415 (c) 2007 Dowling Assoc. Licensed to MMA, LONG BEACH, CA

Overlook Parkway Extension
Ex Open + Alt3
PM Peak Hour

Note: Queue reported is the number of cars per lane.

Overlook Parkway Extension
Ex Open + Alt3
PM Peak Hour

Level Of Service Computation Report
2000 HCM 4-Way Stop Method (Future Volume Alternative)

Intersection #24 Hawarden Dr/Overlook Pkwy

Cycle (sec):	100	Critical Vol./Cap.(X):	0.401
Loss Time (sec):	0 (Y+R=4.0 sec)	Average Delay (sec/veh):	12.0
Optimal Cycle:	0	Level Of Service:	B

Street Name:	Hawarden Dr						Overlook Pkwy					
Approach:	North Bound			South Bound			East Bound			West Bound		
Movement:	L - T - R			L - T - R			L - T - R			L - T - R		
Control:	Stop Sign			Stop Sign			Stop Sign			Stop Sign		
Rights:	Include			Include			Include			Include		
Min. Green:	7	7	7	7	7	7	7	7	7	7	7	7
Lanes:	0 0	1! 0	0	0 0	1! 0	0	1 0	1 1	0	1 0	1 1	0
Volume Module:												
Base Vol:	37	7	4	61	42	105	21	448	38	2	456	16
Growth Adj:	1.00	1.00	1.00	1.00	1.00	1.00	1.00	1.00	1.00	1.00	1.00	1.00
Initial Bse:	37	7	4	61	42	105	21	448	38	2	456	16
Added Vol:	0	0	0	0	0	0	0	0	0	0	0	0
PasserByVol:	0	0	0	0	0	0	0	0	0	0	0	0
Initial Fut:	37	7	4	61	42	105	21	448	38	2	456	16
User Adj:	1.00	1.00	1.00	1.00	1.00	1.00	1.00	1.00	1.00	1.00	1.00	1.00
PHF Adj:	1.00	1.00	1.00	1.00	1.00	1.00	1.00	1.00	1.00	1.00	1.00	1.00
PHF Volume:	37	7	4	61	42	105	21	448	38	2	456	16
Reduct Vol:	0	0	0	0	0	0	0	0	0	0	0	0
Reduced Vol:	37	7	4	61	42	105	21	448	38	2	456	16
PCE Adj:	1.00	1.00	1.00	1.00	1.00	1.00	1.00	1.00	1.00	1.00	1.00	1.00
MLF Adj:	1.00	1.00	1.00	1.00	1.00	1.00	1.00	1.00	1.00	1.00	1.00	1.00
FinalVolume:	37	7	4	61	42	105	21	448	38	2	456	16
Saturation Flow Module:												
Adjustment:	1.00	1.00	1.00	1.00	1.00	1.00	1.00	1.00	1.00	1.00	1.00	1.00
Lanes:	0.77	0.15	0.08	0.29	0.20	0.51	1.00	1.84	0.16	1.00	1.93	0.07
Final Sat.:	382	72	41	171	118	294	552	1118	96	549	1157	41
Capacity Analysis Module:												
Vol/Sat:	0.10	0.10	0.10	0.36	0.36	0.36	0.04	0.40	0.40	0.00	0.39	0.39
Crit Moves:		****			****			****			****	
Delay/Veh:	10.2	10.2	10.2	11.8	11.8	11.8	9.3	12.2	12.0	9.1	12.2	12.1
Delay Adj:	1.00	1.00	1.00	1.00	1.00	1.00	1.00	1.00	1.00	1.00	1.00	1.00
AdjDel/Veh:	10.2	10.2	10.2	11.8	11.8	11.8	9.3	12.2	12.0	9.1	12.2	12.1
LOS by Move:	B	B	B	B	B	B	A	B	B	A	B	B
ApproachDel:		10.2			11.8			12.0			12.2	
Delay Adj:		1.00			1.00			1.00			1.00	
ApprAdjDel:		10.2			11.8			12.0			12.2	
LOS by Appr:		B			B			B			B	
AllWayAvgQ:	0.1	0.1	0.1	0.5	0.5	0.5	0.0	0.6	0.6	0.0	0.6	0.6

Overlook Parkway Extension
Ex Open + Alt3
PM Peak Hour

Note: Queue reported is the number of cars per lane.

Overlook Parkway Extension
Ex Open + Alt3
PM Peak Hour

Level Of Service Computation Report
2000 HCM 4-Way Stop Method (Future Volume Alternative)

Intersection #25 Crystal View Ter/Berry Rd

Cycle (sec):	100	Critical Vol./Cap.(X):	0.125
Loss Time (sec):	0 (Y+R=4.0 sec)	Average Delay (sec/veh):	7.5
Optimal Cycle:	0	Level Of Service:	A

Street Name:	Crystal View Ter									Berry Rd					
Approach:	North Bound			South Bound			East Bound			West Bound					
Movement:	L	- T	- R	L	- T	- R	L	- T	- R	L	- T	- R	L	- T	- R
Control:	Stop Sign			Stop Sign			Stop Sign			Stop Sign					
Rights:	Include			Include			Include			Include					
Min. Green:	7	7	7	7	7	7	7	7	7	7	7	7			
Lanes:	0 0	1! 0	0	0 0	1! 0	0	0 0	1! 0	0	0 0	1! 0	0			
Volume Module:															
Base Vol:	2	31	34	50	53	3	2	0	2	29	1	29			
Growth Adj:	1.00	1.00	1.00	1.00	1.00	1.00	1.00	1.00	1.00	1.00	1.00	1.00			
Initial Bse:	2	31	34	50	53	3	2	0	2	29	1	29			
Added Vol:	0	0	0	0	0	0	0	0	0	0	0	0			
PasserByVol:	0	0	0	0	0	0	0	0	0	0	0	0			
Initial Fut:	2	31	34	50	53	3	2	0	2	29	1	29			
User Adj:	1.00	1.00	1.00	1.00	1.00	1.00	1.00	1.00	1.00	1.00	1.00	1.00			
PHF Adj:	1.00	1.00	1.00	1.00	1.00	1.00	1.00	1.00	1.00	1.00	1.00	1.00			
PHF Volume:	2	31	34	50	53	3	2	0	2	29	1	29			
Reduct Vol:	0	0	0	0	0	0	0	0	0	0	0	0			
Reduced Vol:	2	31	34	50	53	3	2	0	2	29	1	29			
PCE Adj:	1.00	1.00	1.00	1.00	1.00	1.00	1.00	1.00	1.00	1.00	1.00	1.00			
MLF Adj:	1.00	1.00	1.00	1.00	1.00	1.00	1.00	1.00	1.00	1.00	1.00	1.00			
FinalVolume:	2	31	34	50	53	3	2	0	2	29	1	29			
Saturation Flow Module:															
Adjustment:	1.00	1.00	1.00	1.00	1.00	1.00	1.00	1.00	1.00	1.00	1.00	1.00			
Lanes:	0.03	0.46	0.51	0.47	0.50	0.03	0.50	0.00	0.50	0.49	0.02	0.49			
Final Sat.:	28	427	468	401	425	24	420	0	420	420	14	420			
Capacity Analysis Module:															
Vol/Sat:	0.07	0.07	0.07	0.12	0.12	0.12	0.00	xxxx	0.00	0.07	0.07	0.07			
Crit Moves:	****			****			****			****					
Delay/Veh:	7.1	7.1	7.1	7.7	7.7	7.7	7.1	0.0	7.1	7.3	7.3	7.3			
Delay Adj:	1.00	1.00	1.00	1.00	1.00	1.00	1.00	1.00	1.00	1.00	1.00	1.00			
AdjDel/Veh:	7.1	7.1	7.1	7.7	7.7	7.7	7.1	0.0	7.1	7.3	7.3	7.3			
LOS by Move:	A	A	A	A	A	A	A	*	A	A	A	A			
ApproachDel:	7.1			7.7			7.1			7.3					
Delay Adj:	1.00			1.00			1.00			1.00					
ApprAdjDel:	7.1			7.7			7.1			7.3					
LOS by Appr:	A			A			A			A					
AllWayAvgQ:	0.1	0.1	0.1	0.1	0.1	0.1	0.0	0.0	0.0	0.1	0.1	0.1			

Overlook Parkway Extension
Ex Open + Alt3
PM Peak Hour

Note: Queue reported is the number of cars per lane.

Overlook Parkway Extension
Ex Open + Alt3
PM Peak Hour

Level Of Service Computation Report
2000 HCM 4-Way Stop Method (Future Volume Alternative)

Intersection #26 Corinthian Wy/Berry Rd

Cycle (sec):	100	Critical Vol./Cap.(X):	0.077
Loss Time (sec):	0 (Y+R=4.0 sec)	Average Delay (sec/veh):	7.2
Optimal Cycle:	0	Level Of Service:	A

Street Name:	Corinthian Wy									Berry Rd					
Approach:	North Bound			South Bound			East Bound			West Bound		
Movement:	L	- T	- R	L	- T	- R	L	- T	- R	L	- T	- R
Control:	Stop Sign			Stop Sign			Stop Sign			Stop Sign		
Rights:	Include			Include			Include			Include		
Min. Green:	7	7	7	7	7	7	7	7	7	7	7	7
Lanes:	0 0	0 0	0	0 0	1! 0	0	0 1	0 0	0	0 0	0 1	0
Volume Module:												
Base Vol:	0	0	0	6	0	11	14	55	0	0	38	3
Growth Adj:	1.00	1.00	1.00	1.00	1.00	1.00	1.00	1.00	1.00	1.00	1.00	1.00
Initial Bse:	0	0	0	6	0	11	14	55	0	0	38	3
Added Vol:	0	0	0	0	0	0	0	0	0	0	0	0
PasserByVol:	0	0	0	0	0	0	0	0	0	0	0	0
Initial Fut:	0	0	0	6	0	11	14	55	0	0	38	3
User Adj:	1.00	1.00	1.00	1.00	1.00	1.00	1.00	1.00	1.00	1.00	1.00	1.00
PHF Adj:	1.00	1.00	1.00	1.00	1.00	1.00	1.00	1.00	1.00	1.00	1.00	1.00
PHF Volume:	0	0	0	6	0	11	14	55	0	0	38	3
Reduct Vol:	0	0	0	0	0	0	0	0	0	0	0	0
Reduced Vol:	0	0	0	6	0	11	14	55	0	0	38	3
PCE Adj:	1.00	1.00	1.00	1.00	1.00	1.00	1.00	1.00	1.00	1.00	1.00	1.00
MLF Adj:	1.00	1.00	1.00	1.00	1.00	1.00	1.00	1.00	1.00	1.00	1.00	1.00
FinalVolume:	0	0	0	6	0	11	14	55	0	0	38	3
Saturation Flow Module:												
Adjustment:	1.00	1.00	1.00	1.00	1.00	1.00	1.00	1.00	1.00	1.00	1.00	1.00
Lanes:	0.00	0.00	0.00	0.35	0.00	0.65	0.20	0.80	0.00	0.00	0.93	0.07
Final Sat.:	0	0	0	326	0	598	181	712	0	0	838	66
Capacity Analysis Module:												
Vol/Sat:	xxxx	xxxx	xxxx	0.02	xxxx	0.02	0.08	0.08	xxxx	xxxx	0.05	0.05
Crit Moves:				****				****				****
Delay/Veh:	0.0	0.0	0.0	6.9	0.0	6.9	7.3	7.3	0.0	0.0	7.1	7.1
Delay Adj:	1.00	1.00	1.00	1.00	1.00	1.00	1.00	1.00	1.00	1.00	1.00	1.00
AdjDel/Veh:	0.0	0.0	0.0	6.9	0.0	6.9	7.3	7.3	0.0	0.0	7.1	7.1
LOS by Move:	*	*	*	A	*	A	A	A	*	*	A	A
ApproachDel:	xxxxxx			6.9			7.3			7.1		
Delay Adj:	xxxxx			1.00			1.00			1.00		
ApprAdjDel:	xxxxxx			6.9			7.3			7.1		
LOS by Appr:	*			A			A			A		
AllWayAvgQ:	0.0	0.0	0.0	0.0	0.0	0.0	0.1	0.1	0.1	0.0	0.0	0.0

Overlook Parkway Extension
Ex Open + Alt3
PM Peak Hour

Note: Queue reported is the number of cars per lane.

HCM Unsignalized Intersection Capacity Analysis
27: Madison St & Dufferin Ave

11/8/2011

Movement	EBL	EBR	SBL	SBR	NEL2	NEL	NET	SWT	SWR	SWR2
Lane Configurations										
Sign Control	Stop		Stop				Stop	Stop		
Volume (vph)	101	5	0	2	18	0	61	84	117	4
Peak Hour Factor	1.00	1.00	1.00	1.00	1.00	1.00	1.00	1.00	1.00	1.00
Hourly flow rate (vph)	101	5	0	2	18	0	61	84	117	4

Direction, Lane #	EB 1	SB 1	NE 1	SW 1
Volume Total (vph)	106	2	79	205
Volume Left (vph)	0	0	18	84
Volume Right (vph)	5	0	61	4
Hadj (s)	-0.01	0.02	-0.40	0.09
Departure Headway (s)	4.3	4.7	4.2	4.3
Degree Utilization, x	0.13	0.00	0.09	0.24
Capacity (veh/h)	814	700	797	823
Control Delay (s)	7.9	7.7	7.6	8.7
Approach Delay (s)	7.9	7.7	7.6	8.7
Approach LOS	A	A	A	A

Intersection Summary				
Delay		8.2		
HCM Level of Service		A		
Intersection Capacity Utilization	38.1%		ICU Level of Service	A
Analysis Period (min)		15		

Overlook Parkway Extension
Ex Open + Alt3
PM Peak Hour

Level Of Service Computation Report
2000 HCM Unsignalized Method (Future Volume Alternative)

Intersection #28 Orozco Dr/Overlook Pkwy

Average Delay (sec/veh): 3.0 Worst Case Level Of Service: C[23.8]

Street Name:	Orozco Dr						Overlook Pkwy					
Approach:	North Bound			South Bound			East Bound			West Bound		
Movement:	L - T - R			L - T - R			L - T - R			L - T - R		
Control:	Stop Sign			Stop Sign			Uncontrolled			Uncontrolled		
Rights:	Include			Include			Include			Include		
Lanes:	0 0 1! 0 0			0 0 1! 0 0			1 0 1 1 0			1 0 1 1 0		
Volume Module:												
Base Vol:	7	0	1	113	7	15	10	475	7	0	473	16
Growth Adj:	1.00	1.00	1.00	1.00	1.00	1.00	1.00	1.00	1.00	1.00	1.00	1.00
Initial Bse:	7	0	1	113	7	15	10	475	7	0	473	16
Added Vol:	0	0	0	0	0	0	0	0	0	0	0	0
PasserByVol:	0	0	0	0	0	0	0	0	0	0	0	0
Initial Fut:	7	0	1	113	7	15	10	475	7	0	473	16
User Adj:	1.00	1.00	1.00	1.00	1.00	1.00	1.00	1.00	1.00	1.00	1.00	1.00
PHF Adj:	1.00	1.00	1.00	1.00	1.00	1.00	1.00	1.00	1.00	1.00	1.00	1.00
PHF Volume:	7	0	1	113	7	15	10	475	7	0	473	16
Reduct Vol:	0	0	0	0	0	0	0	0	0	0	0	0
FinalVolume:	7	0	1	113	7	15	10	475	7	0	473	16
Critical Gap Module:												
Critical Gp:	7.5	6.5	6.9	7.5	6.5	6.9	4.1	xxxx	xxxxx	xxxxx	xxxx	xxxxx
FollowUpTim:	3.5	4.0	3.3	3.5	4.0	3.3	2.2	xxxx	xxxxx	xxxxx	xxxx	xxxxx
Capacity Module:												
Cnflict Vol:	739	988	241	739	983	245	489	xxxx	xxxxx	xxxx	xxxx	xxxxx
Potent Cap.:	310	249	766	310	251	762	1085	xxxx	xxxxx	xxxx	xxxx	xxxxx
Move Cap.:	295	247	766	307	248	762	1085	xxxx	xxxxx	xxxx	xxxx	xxxxx
Volume/Cap:	0.02	0.00	0.00	0.37	0.03	0.02	0.01	xxxx	xxxx	xxxx	xxxx	xxxx
Level Of Service Module:												
2Way95thQ:	xxxx	xxxx	xxxxx	xxxx	xxxx	xxxxx	0.0	xxxx	xxxxx	xxxx	xxxx	xxxxx
Control Del:	xxxxx	xxxx	xxxxx	xxxxx	xxxx	xxxxx	8.3	xxxx	xxxxx	xxxxx	xxxx	xxxxx
LOS by Move:	*	*	*	*	*	*	A	*	*	*	*	*
Movement:	LT -	LTR -	RT	LT -	LTR -	RT	LT -	LTR -	RT	LT -	LTR -	RT
Shared Cap.:	xxxx	319	xxxxx	xxxx	325	xxxxx	xxxx	xxxx	xxxxx	xxxx	xxxx	xxxxx
SharedQueue:	xxxxx	0.1	xxxxx	xxxxx	2.0	xxxxx	xxxxx	xxxx	xxxxx	xxxxx	xxxx	xxxxx
Shrd ConDel:	xxxxx	16.6	xxxxx	xxxxx	23.8	xxxxx	xxxxx	xxxx	xxxxx	xxxxx	xxxx	xxxxx
Shared LOS:	*	C	*	*	C	*	*	*	*	*	*	*
ApproachDel:	16.6			23.8			xxxxxx			xxxxxx		
ApproachLOS:	C			C			*			*		

Note: Queue reported is the number of cars per lane.

Overlook Parkway Extension
Ex Open + Alt3
PM Peak Hour

Level Of Service Computation Report
2000 HCM 4-Way Stop Method (Future Volume Alternative)

Intersection #51 Madison St/Victoria Ave (North)

Cycle (sec): 100 Critical Vol./Cap.(X): 0.373
Loss Time (sec): 0 (Y+R=4.0 sec) Average Delay (sec/veh): 10.4
Optimal Cycle: 0 Level Of Service: B

Street Name:	Madison St						Victoria Ave (North)					
Approach:	North Bound			South Bound			East Bound			West Bound		
Movement:	L - T - R			L - T - R			L - T - R			L - T - R		
Control:	Stop Sign			Stop Sign			Stop Sign			Stop Sign		
Rights:	Include			Include			Include			Include		
Min. Green:	7	7	7	7	7	7	7	7	7	7	7	7
Lanes:	0 1 0 0 0			0 0 1 0 1			0 0 0 0 0			0 1 0 0 1		
Volume Module:												
Base Vol:	39	110	0	0	205	41	0	0	0	5	230	35
Growth Adj:	1.00	1.00	1.00	1.00	1.00	1.00	1.00	1.00	1.00	1.00	1.00	1.00
Initial Bse:	39	110	0	0	205	41	0	0	0	5	230	35
Added Vol:	0	0	0	0	0	0	0	0	0	0	0	0
PasserByVol:	0	0	0	0	0	0	0	0	0	0	0	0
Initial Fut:	39	110	0	0	205	41	0	0	0	5	230	35
User Adj:	1.00	1.00	1.00	1.00	1.00	1.00	1.00	1.00	1.00	1.00	1.00	1.00
PHF Adj:	1.00	1.00	1.00	1.00	1.00	1.00	1.00	1.00	1.00	1.00	1.00	1.00
PHF Volume:	39	110	0	0	205	41	0	0	0	5	230	35
Reduct Vol:	0	0	0	0	0	0	0	0	0	0	0	0
Reduced Vol:	39	110	0	0	205	41	0	0	0	5	230	35
PCE Adj:	1.00	1.00	1.00	1.00	1.00	1.00	1.00	1.00	1.00	1.00	1.00	1.00
MLF Adj:	1.00	1.00	1.00	1.00	1.00	1.00	1.00	1.00	1.00	1.00	1.00	1.00
FinalVolume:	39	110	0	0	205	41	0	0	0	5	230	35
Saturation Flow Module:												
Adjustment:	1.00	1.00	1.00	1.00	1.00	1.00	1.00	1.00	1.00	1.00	1.00	1.00
Lanes:	0.26	0.74	0.00	0.00	1.00	1.00	0.00	0.00	0.00	0.02	0.98	1.00
Final Sat.:	163	459	0	0	646	736	0	0	0	13	617	717
Capacity Analysis Module:												
Vol/Sat:	0.24	0.24	xxxx	xxxx	0.32	0.06	xxxx	xxxx	xxxx	0.37	0.37	0.05
Crit Moves:	****				****						****	
Delay/Veh:	10.3	10.3	0.0	0.0	10.5	7.7	0.0	0.0	0.0	11.2	11.2	7.7
Delay Adj:	1.00	1.00	1.00	1.00	1.00	1.00	1.00	1.00	1.00	1.00	1.00	1.00
AdjDel/Veh:	10.3	10.3	0.0	0.0	10.5	7.7	0.0	0.0	0.0	11.2	11.2	7.7
LOS by Move:	B	B	*	*	B	A	*	*	*	B	B	A
ApproachDel:	10.3			10.0			xxxxxx			10.8		
Delay Adj:	1.00			1.00			xxxxx			1.00		
ApprAdjDel:	10.3			10.0			xxxxxx			10.8		
LOS by Appr:	B			A			*			B		
AllWayAvgQ:	0.3	0.3	0.3	0.0	0.4	0.1	0.0	0.0	0.0	0.5	0.5	0.0

Overlook Parkway Extension
Ex Open + Alt3
PM Peak Hour

Note: Queue reported is the number of cars per lane.

Overlook Parkway Extension
Ex Open + Alt3
PM Peak Hour

Level Of Service Computation Report
2000 HCM 4-Way Stop Method (Future Volume Alternative)

Intersection #52 Madison St/Victoria Ave (South)

Cycle (sec): 100 | Critical Vol./Cap.(X): 0.555
Loss Time (sec): 0 (Y+R=4.0 sec) | Average Delay (sec/veh): 11.7
Optimal Cycle: 0 | Level Of Service: B

Street Name:	Madison St						Victoria Ave (South)					
Approach:	North Bound			South Bound			East Bound			West Bound		
Movement:	L	T	R	L	T	R	L	T	R	L	T	R
Control:	Stop Sign			Stop Sign			Stop Sign			Stop Sign		
Rights:	Include			Include			Include			Include		
Min. Green:	7	7	7	7	7	7	7	7	7	7	7	7
Lanes:	0 0	0 1	0	0 1	0 0	0	0 0	1! 0	0	0 0	0 0	0
Volume Module:												
Base Vol:	0	112	30	111	99	0	37	344	28	0	0	0
Growth Adj:	1.00	1.00	1.00	1.00	1.00	1.00	1.00	1.00	1.00	1.00	1.00	1.00
Initial Bse:	0	112	30	111	99	0	37	344	28	0	0	0
Added Vol:	0	0	0	0	0	0	0	0	0	0	0	0
PasserByVol:	0	0	0	0	0	0	0	0	0	0	0	0
Initial Fut:	0	112	30	111	99	0	37	344	28	0	0	0
User Adj:	1.00	1.00	1.00	1.00	1.00	1.00	1.00	1.00	1.00	1.00	1.00	1.00
PHF Adj:	1.00	1.00	1.00	1.00	1.00	1.00	1.00	1.00	1.00	1.00	1.00	1.00
PHF Volume:	0	112	30	111	99	0	37	344	28	0	0	0
Reduct Vol:	0	0	0	0	0	0	0	0	0	0	0	0
Reduced Vol:	0	112	30	111	99	0	37	344	28	0	0	0
PCE Adj:	1.00	1.00	1.00	1.00	1.00	1.00	1.00	1.00	1.00	1.00	1.00	1.00
MLF Adj:	1.00	1.00	1.00	1.00	1.00	1.00	1.00	1.00	1.00	1.00	1.00	1.00
FinalVolume:	0	112	30	111	99	0	37	344	28	0	0	0
Saturation Flow Module:												
Adjustment:	1.00	1.00	1.00	1.00	1.00	1.00	1.00	1.00	1.00	1.00	1.00	1.00
Lanes:	0.00	0.79	0.21	0.53	0.47	0.00	0.09	0.84	0.07	0.00	0.00	0.00
Final Sat.:	0	524	140	347	309	0	67	620	50	0	0	0
Capacity Analysis Module:												
Vol/Sat:	xxxx	0.21	0.21	0.32	0.32	xxxx	0.56	0.56	0.56	xxxx	xxxx	xxxx
Crit Moves:			****		****		****					
Delay/Veh:	0.0	9.3	9.3	10.4	10.4	0.0	13.1	13.1	13.1	0.0	0.0	0.0
Delay Adj:	1.00	1.00	1.00	1.00	1.00	1.00	1.00	1.00	1.00	1.00	1.00	1.00
AdjDel/Veh:	0.0	9.3	9.3	10.4	10.4	0.0	13.1	13.1	13.1	0.0	0.0	0.0
LOS by Move:	*	A	A	B	B	*	B	B	B	*	*	*
ApproachDel:		9.3			10.4			13.1			xxxxxx	
Delay Adj:		1.00			1.00			1.00			xxxxx	
ApprAdjDel:		9.3			10.4			13.1			xxxxxx	
LOS by Appr:		A			B			B			*	
AllWayAvgQ:	0.2	0.2	0.2	0.4	0.4	0.4	1.1	1.1	1.1	0.0	0.0	0.0

Overlook Parkway Extension
Ex Open + Alt3
PM Peak Hour

Note: Queue reported is the number of cars per lane.

Overlook Parkway Extension
Ex Open + Alt3
PM Peak Hour

Level Of Service Computation Report
2000 HCM 4-Way Stop Method (Future Volume Alternative)

Intersection #81 Washington St/Victoria Ave (North)

Cycle (sec):	100	Critical Vol./Cap.(X):	0.544
Loss Time (sec):	0 (Y+R=4.0 sec)	Average Delay (sec/veh):	13.6
Optimal Cycle:	0	Level Of Service:	B

Street Name:	Washington St								Victoria Ave (North)					
Approach:	North Bound			South Bound			East Bound			West Bound				
Movement:	L	- T	- R	L	- T	- R	L	- T	- R	L	- T	- R		
Control:	Stop Sign			Stop Sign			Stop Sign			Stop Sign				
Rights:	Include			Include			Include			Include				
Min. Green:	7	7	7	7	7	7	7	7	7	7	7	7		
Lanes:	0 1	1 0	0	0 0	0 1	0	0 0	0 0	0	1 0	0 1	0		
Volume Module:														
Base Vol:	134	261	0	0	310	5	0	0	0	236	118	10		
Growth Adj:	1.00	1.00	1.00	1.00	1.00	1.00	1.00	1.00	1.00	1.00	1.00	1.00		
Initial Bse:	134	261	0	0	310	5	0	0	0	236	118	10		
Added Vol:	0	0	0	0	0	0	0	0	0	0	0	0		
PasserByVol:	0	0	0	0	0	0	0	0	0	0	0	0		
Initial Fut:	134	261	0	0	310	5	0	0	0	236	118	10		
User Adj:	1.00	1.00	1.00	1.00	1.00	1.00	1.00	1.00	1.00	1.00	1.00	1.00		
PHF Adj:	1.00	1.00	1.00	1.00	1.00	1.00	1.00	1.00	1.00	1.00	1.00	1.00		
PHF Volume:	134	261	0	0	310	5	0	0	0	236	118	10		
Reduct Vol:	0	0	0	0	0	0	0	0	0	0	0	0		
Reduced Vol:	134	261	0	0	310	5	0	0	0	236	118	10		
PCE Adj:	1.00	1.00	1.00	1.00	1.00	1.00	1.00	1.00	1.00	1.00	1.00	1.00		
MLF Adj:	1.00	1.00	1.00	1.00	1.00	1.00	1.00	1.00	1.00	1.00	1.00	1.00		
FinalVolume:	134	261	0	0	310	5	0	0	0	236	118	10		
Saturation Flow Module:														
Adjustment:	1.00	1.00	1.00	1.00	1.00	1.00	1.00	1.00	1.00	1.00	1.00	1.00		
Lanes:	0.68	1.32	0.00	0.00	0.98	0.02	0.00	0.00	0.00	1.00	0.92	0.08		
Final Sat.:	373	757	0	0	570	9	0	0	0	513	512	43		
Capacity Analysis Module:														
Vol/Sat:	0.36	0.34	xxxx	xxxx	0.54	0.54	xxxx	xxxx	xxxx	0.46	0.23	0.23		
Crit Moves:	****					****				****				
Delay/Veh:	12.5	11.9	0.0	0.0	15.8	15.8	0.0	0.0	0.0	14.8	10.7	10.7		
Delay Adj:	1.00	1.00	1.00	1.00	1.00	1.00	1.00	1.00	1.00	1.00	1.00	1.00		
AdjDel/Veh:	12.5	11.9	0.0	0.0	15.8	15.8	0.0	0.0	0.0	14.8	10.7	10.7		
LOS by Move:	B	B	*	*	C	C	*	*	*	B	B	B		
ApproachDel:	12.1			15.8			xxxxxx			13.4				
Delay Adj:	1.00			1.00			xxxxx			1.00				
ApprAdjDel:	12.1			15.8			xxxxxx			13.4				
LOS by Appr:	B			C			*			B				
AllWayAvgQ:	0.5	0.5	0.0	1.1	1.1	1.1	0.0	0.0	0.0	0.8	0.3	0.3		

Overlook Parkway Extension
Ex Open + Alt3
PM Peak Hour

Note: Queue reported is the number of cars per lane.

Overlook Parkway Extension
Ex Open + Alt3
PM Peak Hour

Level Of Service Computation Report
2000 HCM 4-Way Stop Method (Future Volume Alternative)

Intersection #82 Washington St/Victoria Ave (South)

Cycle (sec): 100 Critical Vol./Cap.(X): 0.981
Loss Time (sec): 0 (Y+R=4.0 sec) Average Delay (sec/veh): 29.5
Optimal Cycle: 0 Level Of Service: D

Street Name:	Washington St						Victoria Ave (South)					
Approach:	North Bound			South Bound			East Bound			West Bound		
Movement:	L - T - R			L - T - R			L - T - R			L - T - R		
Control:	Stop Sign			Stop Sign			Stop Sign			Stop Sign		
Rights:	Include			Include			Include			Include		
Min. Green:	7	7	7	7	7	7	7	7	7	7	7	7
Lanes:	0 0 2	0 1		0 1	0 0	0	0 1	0 0	1	0 0	0 0	0
Volume Module:												
Base Vol:	0	390	149	2	544	0	5	162	300	0	0	0
Growth Adj:	1.00	1.00	1.00	1.00	1.00	1.00	1.00	1.00	1.00	1.00	1.00	1.00
Initial Bse:	0	390	149	2	544	0	5	162	300	0	0	0
Added Vol:	0	0	0	0	0	0	0	0	0	0	0	0
PasserByVol:	0	0	0	0	0	0	0	0	0	0	0	0
Initial Fut:	0	390	149	2	544	0	5	162	300	0	0	0
User Adj:	1.00	1.00	1.00	1.00	1.00	1.00	1.00	1.00	1.00	1.00	1.00	1.00
PHF Adj:	1.00	1.00	1.00	1.00	1.00	1.00	1.00	1.00	1.00	1.00	1.00	1.00
PHF Volume:	0	390	149	2	544	0	5	162	300	0	0	0
Reduct Vol:	0	0	0	0	0	0	0	0	0	0	0	0
Reduced Vol:	0	390	149	2	544	0	5	162	300	0	0	0
PCE Adj:	1.00	1.00	1.00	1.00	1.00	1.00	1.00	1.00	1.00	1.00	1.00	1.00
MLF Adj:	1.00	1.00	1.00	1.00	1.00	1.00	1.00	1.00	1.00	1.00	1.00	1.00
FinalVolume:	0	390	149	2	544	0	5	162	300	0	0	0
Saturation Flow Module:												
Adjustment:	1.00	1.00	1.00	1.00	1.00	1.00	1.00	1.00	1.00	1.00	1.00	1.00
Lanes:	0.00	2.00	1.00	0.01	0.99	0.00	0.03	0.97	1.00	0.00	0.00	0.00
Final Sat.:	0	1059	588	2	555	0	15	485	554	0	0	0
Capacity Analysis Module:												
Vol/Sat:	xxxx	0.37	0.25	0.98	0.98	xxxx	0.33	0.33	0.54	xxxx	xxxx	xxxx
Crit Moves:		****		****					****			
Delay/Veh:	0.0	13.1	10.7	58.7	58.7	0.0	13.2	13.2	16.1	0.0	0.0	0.0
Delay Adj:	1.00	1.00	1.00	1.00	1.00	1.00	1.00	1.00	1.00	1.00	1.00	1.00
AdjDel/Veh:	0.0	13.1	10.7	58.7	58.7	0.0	13.2	13.2	16.1	0.0	0.0	0.0
LOS by Move:	*	B	B	F	F	*	B	B	C	*	*	*
ApproachDel:		12.5		58.7			15.1			xxxxxx		
Delay Adj:		1.00		1.00			1.00			xxxxx		
ApprAdjDel:		12.5		58.7			15.1			xxxxxx		
LOS by Appr:		B		F			C			*		
AllWayAvgQ:	0.0	0.6	0.3	7.6	7.6	7.6	0.5	0.5	1.1	0.0	0.0	0.0

Overlook Parkway Extension
Ex Open + Alt3
PM Peak Hour

Note: Queue reported is the number of cars per lane.

Overlook Parkway Extension
Ex Open + Alt3
PM Peak Hour

Level Of Service Computation Report
2000 HCM 4-Way Stop Method (Future Volume Alternative)

Intersection #221 Mary St/Victoria Ave (North)

Cycle (sec):	100	Critical Vol./Cap.(X):	0.814
Loss Time (sec):	0 (Y+R=4.0 sec)	Average Delay (sec/veh):	20.2
Optimal Cycle:	0	Level Of Service:	C

Street Name:	Mary St						Victoria Ave (North)					
Approach:	North Bound			South Bound			East Bound			West Bound		
Movement:	L	- T	- R	L	- T	- R	L	- T	- R	L	- T	- R
Control:	Stop Sign			Stop Sign			Stop Sign			Stop Sign		
Rights:	Include			Include			Include			Include		
Min. Green:	7	7	7	7	7	7	7	7	7	7	7	7
Lanes:	0 1	0 0	0	0 0	0 1	0	0 0	0 0	0	0 0	1! 0	0
Volume Module:												
Base Vol:	9	239	0	0	357	200	0	0	0	139	181	51
Growth Adj:	1.00	1.00	1.00	1.00	1.00	1.00	1.00	1.00	1.00	1.00	1.00	1.00
Initial Bse:	9	239	0	0	357	200	0	0	0	139	181	51
Added Vol:	0	0	0	0	0	0	0	0	0	0	0	0
PasserByVol:	0	0	0	0	0	0	0	0	0	0	0	0
Initial Fut:	9	239	0	0	357	200	0	0	0	139	181	51
User Adj:	1.00	1.00	1.00	1.00	1.00	1.00	1.00	1.00	1.00	1.00	1.00	1.00
PHF Adj:	1.00	1.00	1.00	1.00	1.00	1.00	1.00	1.00	1.00	1.00	1.00	1.00
PHF Volume:	9	239	0	0	357	200	0	0	0	139	181	51
Reduct Vol:	0	0	0	0	0	0	0	0	0	0	0	0
Reduced Vol:	9	239	0	0	357	200	0	0	0	139	181	51
PCE Adj:	1.00	1.00	1.00	1.00	1.00	1.00	1.00	1.00	1.00	1.00	1.00	1.00
MLF Adj:	1.00	1.00	1.00	1.00	1.00	1.00	1.00	1.00	1.00	1.00	1.00	1.00
FinalVolume:	9	239	0	0	357	200	0	0	0	139	181	51
Saturation Flow Module:												
Adjustment:	1.00	1.00	1.00	1.00	1.00	1.00	1.00	1.00	1.00	1.00	1.00	1.00
Lanes:	0.04	0.96	0.00	0.00	0.64	0.36	0.00	0.00	0.00	0.37	0.49	0.14
Final Sat.:	21	569	0	0	438	246	0	0	0	221	288	81
Capacity Analysis Module:												
Vol/Sat:	0.42	0.42	xxxx	xxxx	0.81	0.81	xxxx	xxxx	xxxx	0.63	0.63	0.63
Crit Moves:		****			****						****	
Delay/Veh:	12.6	12.6	0.0	0.0	25.7	25.7	0.0	0.0	0.0	17.1	17.1	17.1
Delay Adj:	1.00	1.00	1.00	1.00	1.00	1.00	1.00	1.00	1.00	1.00	1.00	1.00
AdjDel/Veh:	12.6	12.6	0.0	0.0	25.7	25.7	0.0	0.0	0.0	17.1	17.1	17.1
LOS by Move:	B	B	*	*	D	D	*	*	*	C	C	C
ApproachDel:		12.6			25.7			xxxxxx			17.1	
Delay Adj:		1.00			1.00			xxxxx			1.00	
ApprAdjDel:		12.6			25.7			xxxxxx			17.1	
LOS by Appr:		B			D			*			C	
AllWayAvgQ:	0.6	0.6	0.6	3.3	3.3	3.3	0.0	0.0	0.0	1.4	1.4	1.4

Overlook Parkway Extension
Ex Open + Alt3
PM Peak Hour

Note: Queue reported is the number of cars per lane.

Overlook Parkway Extension
Ex Open + Alt3
PM Peak Hour

Level Of Service Computation Report
2000 HCM 4-Way Stop Method (Future Volume Alternative)

Intersection #222 Mary St/Victoria Ave (South)

Cycle (sec):	100	Critical Vol./Cap.(X):	0.703
Loss Time (sec):	0 (Y+R=4.0 sec)	Average Delay (sec/veh):	14.7
Optimal Cycle:	0	Level Of Service:	B

Street Name:	Mary St							Victoria Ave (South)					
Approach:	North Bound			South Bound				East Bound			West Bound		
Movement:	L	- T	- R	L	- T	- R		L	- T	- R	L	- T	- R
Control:	Stop Sign			Stop Sign				Stop Sign			Stop Sign		
Rights:	Include			Include				Include			Include		
Min. Green:	7	7	7	7	7	7		7	7	7	7	7	7
Lanes:	0 0	0 1	0	0 1	0 0	0		1 0	0 1	0	0 0	0 0	0
Volume Module:													
Base Vol:	0	146	40	62	434	0		102	169	30	0	0	0
Growth Adj:	1.00	1.00	1.00	1.00	1.00	1.00		1.00	1.00	1.00	1.00	1.00	1.00
Initial Bse:	0	146	40	62	434	0		102	169	30	0	0	0
Added Vol:	0	0	0	0	0	0		0	0	0	0	0	0
PasserByVol:	0	0	0	0	0	0		0	0	0	0	0	0
Initial Fut:	0	146	40	62	434	0		102	169	30	0	0	0
User Adj:	1.00	1.00	1.00	1.00	1.00	1.00		1.00	1.00	1.00	1.00	1.00	1.00
PHF Adj:	1.00	1.00	1.00	1.00	1.00	1.00		1.00	1.00	1.00	1.00	1.00	1.00
PHF Volume:	0	146	40	62	434	0		102	169	30	0	0	0
Reduct Vol:	0	0	0	0	0	0		0	0	0	0	0	0
Reduced Vol:	0	146	40	62	434	0		102	169	30	0	0	0
PCE Adj:	1.00	1.00	1.00	1.00	1.00	1.00		1.00	1.00	1.00	1.00	1.00	1.00
MLF Adj:	1.00	1.00	1.00	1.00	1.00	1.00		1.00	1.00	1.00	1.00	1.00	1.00
FinalVolume:	0	146	40	62	434	0		102	169	30	0	0	0
Saturation Flow Module:													
Adjustment:	1.00	1.00	1.00	1.00	1.00	1.00		1.00	1.00	1.00	1.00	1.00	1.00
Lanes:	0.00	0.78	0.22	0.12	0.88	0.00		1.00	0.85	0.15	0.00	0.00	0.00
Final Sat.:	0	514	141	88	618	0		521	485	86	0	0	0
Capacity Analysis Module:													
Vol/Sat:	xxxx	0.28	0.28	0.70	0.70	xxxx		0.20	0.35	0.35	xxxx	xxxx	xxxx
Crit Moves:		****			****				****				
Delay/Veh:	0.0	10.2	10.2	18.5	18.5	0.0		10.8	11.6	11.6	0.0	0.0	0.0
Delay Adj:	1.00	1.00	1.00	1.00	1.00	1.00		1.00	1.00	1.00	1.00	1.00	1.00
AdjDel/Veh:	0.0	10.2	10.2	18.5	18.5	0.0		10.8	11.6	11.6	0.0	0.0	0.0
LOS by Move:	*	B	B	C	C	*		B	B	B	*	*	*
ApproachDel:		10.2			18.5				11.3			xxxxxx	
Delay Adj:		1.00			1.00				1.00			xxxxx	
ApprAdjDel:		10.2			18.5				11.3			xxxxxx	
LOS by Appr:		B			C				B			*	
AllWayAvgQ:	0.4	0.4	0.4	2.1	2.1	2.1		0.2	0.5	0.5	0.0	0.0	0.0

Overlook Parkway Extension
Ex Open + Alt3
PM Peak Hour

Note: Queue reported is the number of cars per lane.

Overlook Parkway Extension
Ex Open + Alt4A
AM Peak Hour

Scenario Report

Scenario:	Ex Open + Alt4A AM
Command:	Ex Open + Alt4A AM
Volume:	Ex Open + Alt4A AM
Geometry:	Ex + Alt4A
Impact Fee:	Default Impact Fee
Trip Generation:	none
Trip Distribution:	none
Paths:	Default Path
Routes:	Default Route
Configuration:	Ex Open + Alt4A AM

Overlook Parkway Extension
Ex Open + Alt4A
AM Peak Hour

Impact Analysis Report
Level Of Service

Intersection	Base LOS	Base Del/ Veh	Base V/ C	Future LOS	Future Del/ Veh	Future V/ C	Change in
# 1 Madison St/SR-91 WB Ramps	C	30.8	0.750	C	30.8	0.750	+ 0.000 D/V
# 2 Madison St/SR-91 EB Ramps	C	26.3	0.536	C	26.3	0.536	+ 0.000 D/V
# 3 Madison St/Indiana Ave	D	40.3	0.837	D	40.3	0.837	+ 0.000 D/V
# 4 Madison St/Lincoln Ave	C	28.4	0.531	C	28.4	0.531	+ 0.000 D/V
# 6 Washington St/Indiana Ave	C	24.1	0.515	C	24.1	0.515	+ 0.000 D/V
# 7 Washington St/Lincoln Ave	C	17.9	0.785	C	17.9	0.785	+ 0.000 V/C
# 9 Washington St/Overlook Pkwy	D	48.0	0.955	D	48.0	0.955	+ 0.000 D/V
# 10 Riverside Ave-SR-91 WB/Arlingt	C	31.1	0.789	C	31.1	0.789	+ 0.000 D/V
# 11 Indiana Ave-SR-91 EB/Arlington	C	26.0	0.659	C	26.0	0.659	+ 0.000 D/V
# 12 Victoria Ave/Arlington Ave	D	42.1	0.930	D	42.1	0.930	+ 0.000 D/V
# 13 Alessandro Blvd/Arlington Ave	C	27.7	0.675	C	27.7	0.675	+ 0.000 D/V
# 14 Alessandro Blvd/Overlook Pkwy	D	36.5	0.874	D	36.5	0.874	+ 0.000 D/V
# 15 Alessandro Blvd/Trautwein Rd	C	34.4	0.855	C	34.4	0.855	+ 0.000 D/V
# 16 Crystal View Ter/Overlook Pkwy	B	13.0	0.581	B	13.0	0.581	+ 0.000 V/C
# 17 Kingdom Dr/Overlook Pkwy	D	25.6	0.000	D	25.6	0.000	+ 0.000 D/V
# 18 Kingdom Dr/Green Orchard Pl	A	8.6	0.000	A	8.6	0.000	+ 0.000 D/V
# 19 Trautwein Rd/John F. Kennedy D	C	32.2	0.840	C	32.2	0.840	+ 0.000 D/V
# 20 Washington St/Bradley St	B	19.4	0.640	B	19.4	0.640	+ 0.000 D/V
# 21 Alessandro Blvd/Via Vista Dr	B	18.1	0.661	B	18.1	0.661	+ 0.000 D/V
# 23 Mary St/Hawarden Dr	A	7.8	0.162	A	7.8	0.162	+ 0.000 V/C
# 24 Hawarden Dr/Overlook Pkwy	C	15.2	0.662	C	15.2	0.662	+ 0.000 V/C
# 25 Crystal View Ter/Berry Rd	A	7.4	0.156	A	7.4	0.156	+ 0.000 V/C
# 26 Corinthian Wy/Berry Rd	A	7.4	0.118	A	7.4	0.118	+ 0.000 V/C

Overlook Parkway Extension
Ex Open + Alt4A
AM Peak Hour

Intersection	Base LOS	Base Del/ Veh	Base V/ C	Future LOS	Future Del/ Veh	Future V/ C	Change in
# 28 Orozco Dr/Overlook Pkwy	D	25.3	0.000	D	25.3	0.000	+ 0.000 D/V
# 51 Madison St/Victoria Ave (North	F	163.4	1.468	F	163.4	1.468	+ 0.000 V/C
# 52 Madison St/Victoria Ave (South	F	140.4	1.467	F	140.4	1.467	+ 0.000 V/C
# 81 Washington St/Victoria Ave (No	B	10.6	0.360	B	10.6	0.360	+ 0.000 V/C
# 82 Washington St/Victoria Ave (So	B	10.5	0.499	B	10.5	0.499	+ 0.000 V/C
#221 Mary St/Victoria Ave (North)	B	12.7	0.597	B	12.7	0.597	+ 0.000 V/C
#222 Mary St/Victoria Ave (South)	B	11.6	0.485	B	11.6	0.485	+ 0.000 V/C

Overlook Parkway Extension
Ex Open + Alt4A
AM Peak Hour

Level Of Service Computation Report
2000 HCM Operations Method (Future Volume Alternative)

Intersection #1 Madison St/SR-91 WB Ramps

Cycle (sec):	100	Critical Vol./Cap.(X):	0.750
Loss Time (sec):	12 (Y+R=4.0 sec)	Average Delay (sec/veh):	30.8
Optimal Cycle:	67	Level Of Service:	C

Street Name:	Madison St						SR-91 WB Ramps					
Approach:	North Bound			South Bound			East Bound			West Bound		
Movement:	L -	T -	R	L -	T -	R	L -	T -	R	L -	T -	R
Control:	Protected			Protected			Split Phase			Split Phase		
Rights:	Include			Include			Include			Include		
Min. Green:	7	7	7	7	7	7	7	7	7	7	7	7
Lanes:	1 0	2 0	0	0 0	3 0	1	0 0	0 0	0	0 1	0 0	1
Volume Module:												
Base Vol:	557	709	0	0	469	249	0	0	0	333	6	185
Growth Adj:	1.00	1.00	1.00	1.00	1.00	1.00	1.00	1.00	1.00	1.00	1.00	1.00
Initial Bse:	557	709	0	0	469	249	0	0	0	333	6	185
Added Vol:	0	0	0	0	0	0	0	0	0	0	0	0
PasserByVol:	0	0	0	0	0	0	0	0	0	0	0	0
Initial Fut:	557	709	0	0	469	249	0	0	0	333	6	185
User Adj:	1.00	1.00	1.00	1.00	1.00	1.00	1.00	1.00	1.00	1.00	1.00	1.00
PHF Adj:	1.00	1.00	1.00	1.00	1.00	1.00	1.00	1.00	1.00	1.00	1.00	1.00
PHF Volume:	557	709	0	0	469	249	0	0	0	333	6	185
Reduct Vol:	0	0	0	0	0	0	0	0	0	0	0	0
Reduced Vol:	557	709	0	0	469	249	0	0	0	333	6	185
PCE Adj:	1.00	1.00	1.00	1.00	1.00	1.00	1.00	1.00	1.00	1.00	1.00	1.00
MLF Adj:	1.00	1.00	1.00	1.00	1.00	1.00	1.00	1.00	1.00	1.00	1.00	1.00
FinalVolume:	557	709	0	0	469	249	0	0	0	333	6	185
Saturation Flow Module:												
Sat/Lane:	1900	1900	1900	1900	1900	1900	1900	1900	1900	1900	1900	1900
Adjustment:	0.95	0.95	1.00	1.00	0.91	0.85	1.00	1.00	1.00	0.91	0.91	0.85
Lanes:	1.00	2.00	0.00	0.00	3.00	1.00	0.00	0.00	0.00	0.98	0.02	1.00
Final Sat.:	1805	3610	0	0	5187	1615	0	0	0	1689	30	1615
Capacity Analysis Module:												
Vol/Sat:	0.31	0.20	0.00	0.00	0.09	0.15	0.00	0.00	0.00	0.20	0.20	0.11
Crit Moves:	****					****				****		
Green/Cycle:	0.41	0.45	0.00	0.00	0.21	0.21	0.00	0.00	0.00	0.26	0.26	0.26
Volume/Cap:	0.75	0.43	0.00	0.00	0.44	0.75	0.00	0.00	0.00	0.75	0.75	0.44
Delay/Veh:	29.3	18.7	0.0	0.0	35.0	46.5	0.0	0.0	0.0	40.7	40.7	31.4
User DelAdj:	1.00	1.00	1.00	1.00	1.00	1.00	1.00	1.00	1.00	1.00	1.00	1.00
AdjDel/Veh:	29.3	18.7	0.0	0.0	35.0	46.5	0.0	0.0	0.0	40.7	40.7	31.4
LOS by Move:	C	B	A	A	C	D	A	A	A	D	D	C
HCM2kAvgQ:	16	8	0	0	5	9	0	0	0	11	11	5

Note: Queue reported is the number of cars per lane.

Traffix 7.9.0415 (c) 2007 Dowling Assoc. Licensed to MMA, LONG BEACH, CA

Overlook Parkway Extension
Ex Open + Alt4A
AM Peak Hour

Level Of Service Computation Report
2000 HCM Operations Method (Future Volume Alternative)

Intersection #2 Madison St/SR-91 EB Ramps

Cycle (sec):	100	Critical Vol./Cap.(X):	0.536
Loss Time (sec):	12 (Y+R=4.0 sec)	Average Delay (sec/veh):	26.3
Optimal Cycle:	50	Level Of Service:	C

Street Name:	Madison St						SR-91 EB Ramps					
Approach:	North Bound			South Bound			East Bound			West Bound		
Movement:	L -	T -	R	L -	T -	R	L -	T -	R	L -	T -	R
Control:	Protected			Protected			Protected			Protected		
Rights:	Include			Include			Include			Include		
Min. Green:	7	7	7	7	7	7	7	7	7	7	7	7
Lanes:	0 0	3 0	1	1 0	2 0	0	0 1	0 0	1	0 0	0 0	0
Volume Module:												
Base Vol:	0	1036	255	184	614	0	239	11	274	0	0	0
Growth Adj:	1.00	1.00	1.00	1.00	1.00	1.00	1.00	1.00	1.00	1.00	1.00	1.00
Initial Bse:	0	1036	255	184	614	0	239	11	274	0	0	0
Added Vol:	0	0	0	0	0	0	0	0	0	0	0	0
PasserByVol:	0	0	0	0	0	0	0	0	0	0	0	0
Initial Fut:	0	1036	255	184	614	0	239	11	274	0	0	0
User Adj:	1.00	1.00	1.00	1.00	1.00	1.00	1.00	1.00	1.00	1.00	1.00	1.00
PHF Adj:	1.00	1.00	1.00	1.00	1.00	1.00	1.00	1.00	1.00	1.00	1.00	1.00
PHF Volume:	0	1036	255	184	614	0	239	11	274	0	0	0
Reduct Vol:	0	0	0	0	0	0	0	0	0	0	0	0
Reduced Vol:	0	1036	255	184	614	0	239	11	274	0	0	0
PCE Adj:	1.00	1.00	1.00	1.00	1.00	1.00	1.00	1.00	1.00	1.00	1.00	1.00
MLF Adj:	1.00	1.00	1.00	1.00	1.00	1.00	1.00	1.00	1.00	1.00	1.00	1.00
FinalVolume:	0	1036	255	184	614	0	239	11	274	0	0	0
Saturation Flow Module:												
Sat/Lane:	1900	1900	1900	1900	1900	1900	1900	1900	1900	1900	1900	1900
Adjustment:	1.00	0.91	0.85	0.95	0.95	1.00	0.93	0.93	0.85	1.00	1.00	1.00
Lanes:	0.00	3.00	1.00	1.00	2.00	0.00	0.96	0.04	1.00	0.00	0.00	0.00
Final Sat.:	0	5187	1615	1805	3610	0	1693	78	1615	0	0	0
Capacity Analysis Module:												
Vol/Sat:	0.00	0.20	0.16	0.10	0.17	0.00	0.14	0.14	0.17	0.00	0.00	0.00
Crit Moves:		****		****					****			
Green/Cycle:	0.00	0.37	0.37	0.19	0.40	0.00	0.26	0.32	0.32	0.00	0.00	0.00
Volume/Cap:	0.00	0.54	0.42	0.54	0.43	0.00	0.55	0.45	0.54	0.00	0.00	0.00
Delay/Veh:	0.0	24.9	23.8	38.2	22.0	0.0	33.4	27.7	29.2	0.0	0.0	0.0
User DelAdj:	1.00	1.00	1.00	1.00	1.00	1.00	1.00	1.00	1.00	1.00	1.00	1.00
AdjDel/Veh:	0.0	24.9	23.8	38.2	22.0	0.0	33.4	27.7	29.2	0.0	0.0	0.0
LOS by Move:	A	C	C	D	C	A	C	C	C	A	A	A
HCM2kAvgQ:	0	9	6	6	7	0	7	6	7	0	0	0

Note: Queue reported is the number of cars per lane.

Traffix 7.9.0415 (c) 2007 Dowling Assoc. Licensed to MMA, LONG BEACH, CA

Overlook Parkway Extension
Ex Open + Alt4A
AM Peak Hour

Level Of Service Computation Report
2000 HCM Operations Method (Future Volume Alternative)

Intersection #3 Madison St/Indiana Ave

Cycle (sec):	100	Critical Vol./Cap.(X):	0.837
Loss Time (sec):	16 (Y+R=4.0 sec)	Average Delay (sec/veh):	40.3
Optimal Cycle:	96	Level Of Service:	D

Street Name:	Madison St						Indiana Ave					
Approach:	North Bound			South Bound			East Bound			West Bound		
Movement:	L - T - R			L - T - R			L - T - R			L - T - R		
Control:	Protected			Protected			Protected			Protected		
Rights:	Include			Include			Include			Include		
Min. Green:	7	7	7	7	7	7	7	7	7	7	7	7
Lanes:	1 0	1 1	0	1 0	1 1	0	1 0	1 1	0	1 0	1 1	0
Volume Module:												
Base Vol:	50	727	32	275	388	132	182	453	40	15	135	382
Growth Adj:	1.00	1.00	1.00	1.00	1.00	1.00	1.00	1.00	1.00	1.00	1.00	1.00
Initial Bse:	50	727	32	275	388	132	182	453	40	15	135	382
Added Vol:	0	0	0	0	0	0	0	0	0	0	0	0
PasserByVol:	0	0	0	0	0	0	0	0	0	0	0	0
Initial Fut:	50	727	32	275	388	132	182	453	40	15	135	382
User Adj:	1.00	1.00	1.00	1.00	1.00	1.00	1.00	1.00	1.00	1.00	1.00	1.00
PHF Adj:	1.00	1.00	1.00	1.00	1.00	1.00	1.00	1.00	1.00	1.00	1.00	1.00
PHF Volume:	50	727	32	275	388	132	182	453	40	15	135	382
Reduct Vol:	0	0	0	0	0	0	0	0	0	0	0	0
Reduced Vol:	50	727	32	275	388	132	182	453	40	15	135	382
PCE Adj:	1.00	1.00	1.00	1.00	1.00	1.00	1.00	1.00	1.00	1.00	1.00	1.00
MLF Adj:	1.00	1.00	1.00	1.00	1.00	1.00	1.00	1.00	1.00	1.00	1.00	1.00
FinalVolume:	50	727	32	275	388	132	182	453	40	15	135	382
Saturation Flow Module:												
Sat/Lane:	1900	1900	1900	1900	1900	1900	1900	1900	1900	1900	1900	1900
Adjustment:	0.95	0.94	0.94	0.95	0.91	0.91	0.95	0.94	0.94	0.95	0.84	0.84
Lanes:	1.00	1.92	0.08	1.00	1.49	0.51	1.00	1.84	0.16	1.00	1.00	1.00
Final Sat.:	1805	3437	151	1805	2591	882	1805	3277	289	1805	1605	1605
Capacity Analysis Module:												
Vol/Sat:	0.03	0.21	0.21	0.15	0.15	0.15	0.10	0.14	0.14	0.01	0.08	0.24
Crit Moves:		****		****			****					****
Green/Cycle:	0.14	0.25	0.25	0.18	0.30	0.30	0.12	0.27	0.27	0.14	0.28	0.28
Volume/Cap:	0.20	0.84	0.84	0.84	0.51	0.51	0.84	0.51	0.51	0.06	0.30	0.84
Delay/Veh:	38.6	42.3	42.3	56.3	29.5	29.5	66.7	31.5	31.5	37.7	28.0	43.3
User DelAdj:	1.00	1.00	1.00	1.00	1.00	1.00	1.00	1.00	1.00	1.00	1.00	1.00
AdjDel/Veh:	38.6	42.3	42.3	56.3	29.5	29.5	66.7	31.5	31.5	37.7	28.0	43.3
LOS by Move:	D	D	D	E	C	C	E	C	C	D	C	D
HCM2kAvgQ:	1	14	14	11	7	7	8	7	7	0	3	14

Note: Queue reported is the number of cars per lane.

Traffix 7.9.0415 (c) 2007 Dowling Assoc. Licensed to MMA, LONG BEACH, CA

Overlook Parkway Extension
Ex Open + Alt4A
AM Peak Hour

Level Of Service Computation Report
2000 HCM Operations Method (Future Volume Alternative)

Intersection #4 Madison St/Lincoln Ave

Cycle (sec):	100	Critical Vol./Cap.(X):	0.531
Loss Time (sec):	16 (Y+R=4.0 sec)	Average Delay (sec/veh):	28.4
Optimal Cycle:	51	Level Of Service:	C

Street Name:	Madison St						Lincoln Ave					
Approach:	North Bound			South Bound			East Bound			West Bound		
Movement:	L - T - R			L - T - R			L - T - R			L - T - R		
Control:	Protected			Protected			Protected			Protected		
Rights:	Include			Include			Include			Include		
Min. Green:	7	7	7	7	7	7	7	7	7	7	7	7
Lanes:	1 0	0 1	0	1 0	0 1	0	1 0	0 1	0	1 0	1 1	0
Volume Module:												
Base Vol:	53	562	12	53	212	86	81	177	22	13	154	90
Growth Adj:	1.00	1.00	1.00	1.00	1.00	1.00	1.00	1.00	1.00	1.00	1.00	1.00
Initial Bse:	53	562	12	53	212	86	81	177	22	13	154	90
Added Vol:	0	0	0	0	0	0	0	0	0	0	0	0
PasserByVol:	0	0	0	0	0	0	0	0	0	0	0	0
Initial Fut:	53	562	12	53	212	86	81	177	22	13	154	90
User Adj:	1.00	1.00	1.00	1.00	1.00	1.00	1.00	1.00	1.00	1.00	1.00	1.00
PHF Adj:	1.00	1.00	1.00	1.00	1.00	1.00	1.00	1.00	1.00	1.00	1.00	1.00
PHF Volume:	53	562	12	53	212	86	81	177	22	13	154	90
Reduct Vol:	0	0	0	0	0	0	0	0	0	0	0	0
Reduced Vol:	53	562	12	53	212	86	81	177	22	13	154	90
PCE Adj:	1.00	1.00	1.00	1.00	1.00	1.00	1.00	1.00	1.00	1.00	1.00	1.00
MLF Adj:	1.00	1.00	1.00	1.00	1.00	1.00	1.00	1.00	1.00	1.00	1.00	1.00
FinalVolume:	53	562	12	53	212	86	81	177	22	13	154	90
Saturation Flow Module:												
Sat/Lane:	1900	1900	1900	1900	1900	1900	1900	1900	1900	1900	1900	1900
Adjustment:	0.95	1.00	1.00	0.95	0.96	0.96	0.95	0.98	0.98	0.95	0.90	0.90
Lanes:	1.00	0.98	0.02	1.00	0.71	0.29	1.00	0.89	0.11	1.00	1.26	0.74
Final Sat.:	1805	1855	40	1805	1294	525	1805	1661	206	1805	2153	1258
Capacity Analysis Module:												
Vol/Sat:	0.03	0.30	0.30	0.03	0.16	0.16	0.04	0.11	0.11	0.01	0.07	0.07
Crit Moves:		****		****				****		****		
Green/Cycle:	0.18	0.52	0.52	0.07	0.41	0.41	0.12	0.18	0.18	0.07	0.13	0.13
Volume/Cap:	0.17	0.59	0.59	0.42	0.40	0.40	0.36	0.59	0.59	0.10	0.56	0.56
Delay/Veh:	35.2	17.6	17.6	46.8	21.0	21.0	41.1	40.1	40.1	43.9	42.7	42.7
User DelAdj:	1.00	1.00	1.00	1.00	1.00	1.00	1.00	1.00	1.00	1.00	1.00	1.00
AdjDel/Veh:	35.2	17.6	17.6	46.8	21.0	21.0	41.1	40.1	40.1	43.9	42.7	42.7
LOS by Move:	D	B	B	D	C	C	D	D	D	D	D	D
HCM2kAvgQ:	1	12	12	2	6	6	3	6	6	0	5	5

Note: Queue reported is the number of cars per lane.

Traffix 7.9.0415 (c) 2007 Dowling Assoc. Licensed to MMA, LONG BEACH, CA

Overlook Parkway Extension
Ex Open + Alt4A
AM Peak Hour

Level Of Service Computation Report
2000 HCM Operations Method (Future Volume Alternative)

Intersection #6 Washington St/Indiana Ave

Cycle (sec):	100	Critical Vol./Cap.(X):	0.515
Loss Time (sec):	12 (Y+R=4.0 sec)	Average Delay (sec/veh):	24.1
Optimal Cycle:	50	Level Of Service:	C

Street Name:	Washington St						Indiana Ave					
Approach:	North Bound			South Bound			East Bound			West Bound		
Movement:	L - T - R			L - T - R			L - T - R			L - T - R		
Control:	Permitted			Permitted			Protected			Protected		
Rights:	Ovl			Include			Include			Include		
Min. Green:	7	7	7	7	7	7	7	7	7	7	7	7
Lanes:	1 0	0 1	0	1 0	0 1	0	1 0	1 1	0	1 0	1 1	0
Volume Module:												
Base Vol:	259	5	320	3	0	2	8	689	58	77	319	11
Growth Adj:	1.00	1.00	1.00	1.00	1.00	1.00	1.00	1.00	1.00	1.00	1.00	1.00
Initial Bse:	259	5	320	3	0	2	8	689	58	77	319	11
Added Vol:	0	0	0	0	0	0	0	0	0	0	0	0
PasserByVol:	0	0	0	0	0	0	0	0	0	0	0	0
Initial Fut:	259	5	320	3	0	2	8	689	58	77	319	11
User Adj:	1.00	1.00	1.00	1.00	1.00	1.00	1.00	1.00	1.00	1.00	1.00	1.00
PHF Adj:	1.00	1.00	1.00	1.00	1.00	1.00	1.00	1.00	1.00	1.00	1.00	1.00
PHF Volume:	259	5	320	3	0	2	8	689	58	77	319	11
Reduct Vol:	0	0	0	0	0	0	0	0	0	0	0	0
Reduced Vol:	259	5	320	3	0	2	8	689	58	77	319	11
PCE Adj:	1.00	1.00	1.00	1.00	1.00	1.00	1.00	1.00	1.00	1.00	1.00	1.00
MLF Adj:	1.00	1.00	1.00	1.00	1.00	1.00	1.00	1.00	1.00	1.00	1.00	1.00
FinalVolume:	259	5	320	3	0	2	8	689	58	77	319	11
Saturation Flow Module:												
Sat/Lane:	1900	1900	1900	1900	1900	1900	1900	1900	1900	1900	1900	1900
Adjustment:	0.77	0.85	0.85	0.42	1.00	0.85	0.95	0.94	0.94	0.95	0.95	0.95
Lanes:	1.00	0.02	0.98	1.00	0.00	1.00	1.00	1.84	0.16	1.00	1.93	0.07
Final Sat.:	1457	25	1594	806	0	1615	1805	3290	277	1805	3472	120
Capacity Analysis Module:												
Vol/Sat:	0.18	0.20	0.20	0.00	0.00	0.00	0.00	0.21	0.21	0.04	0.09	0.09
Crit Moves:		****						****		****		
Green/Cycle:	0.39	0.39	0.47	0.39	0.00	0.39	0.21	0.41	0.41	0.08	0.28	0.28
Volume/Cap:	0.46	0.51	0.42	0.01	0.00	0.00	0.02	0.51	0.51	0.51	0.33	0.33
Delay/Veh:	23.2	24.0	17.8	18.7	0.0	18.6	31.2	22.6	22.6	47.0	28.9	28.9
User DelAdj:	1.00	1.00	1.00	1.00	1.00	1.00	1.00	1.00	1.00	1.00	1.00	1.00
AdjDel/Veh:	23.2	24.0	17.8	18.7	0.0	18.6	31.2	22.6	22.6	47.0	28.9	28.9
LOS by Move:	C	C	B	B	A	B	C	C	C	D	C	C
HCM2kAvgQ:	6	8	7	0	0	0	0	9	9	3	4	4

Note: Queue reported is the number of cars per lane.

Traffix 7.9.0415 (c) 2007 Dowling Assoc. Licensed to MMA, LONG BEACH, CA

Overlook Parkway Extension
Ex Open + Alt4A
AM Peak Hour

Level Of Service Computation Report
2000 HCM 4-Way Stop Method (Future Volume Alternative)

Intersection #7 Washington St/Lincoln Ave

Cycle (sec):	100	Critical Vol./Cap.(X):	0.785
Loss Time (sec):	0 (Y+R=4.0 sec)	Average Delay (sec/veh):	17.9
Optimal Cycle:	0	Level Of Service:	C

Street Name:	Washington St						Lincoln Ave					
Approach:	North Bound			South Bound			East Bound			West Bound		
Movement:	L - T - R			L - T - R			L - T - R			L - T - R		
Control:	Stop Sign			Stop Sign			Stop Sign			Stop Sign		
Rights:	Include			Include			Include			Include		
Min. Green:	7	7	7	7	7	7	7	7	7	7	7	7
Lanes:	0 0	1! 0	0	0 0	1! 0	0	0 0	1! 0	0	0 1	0 0	1
Volume Module:												
Base Vol:	28	445	17	65	73	25	18	228	4	7	162	67
Growth Adj:	1.00	1.00	1.00	1.00	1.00	1.00	1.00	1.00	1.00	1.00	1.00	1.00
Initial Bse:	28	445	17	65	73	25	18	228	4	7	162	67
Added Vol:	0	0	0	0	0	0	0	0	0	0	0	0
PasserByVol:	0	0	0	0	0	0	0	0	0	0	0	0
Initial Fut:	28	445	17	65	73	25	18	228	4	7	162	67
User Adj:	1.00	1.00	1.00	1.00	1.00	1.00	1.00	1.00	1.00	1.00	1.00	1.00
PHF Adj:	1.00	1.00	1.00	1.00	1.00	1.00	1.00	1.00	1.00	1.00	1.00	1.00
PHF Volume:	28	445	17	65	73	25	18	228	4	7	162	67
Reduct Vol:	0	0	0	0	0	0	0	0	0	0	0	0
Reduced Vol:	28	445	17	65	73	25	18	228	4	7	162	67
PCE Adj:	1.00	1.00	1.00	1.00	1.00	1.00	1.00	1.00	1.00	1.00	1.00	1.00
MLF Adj:	1.00	1.00	1.00	1.00	1.00	1.00	1.00	1.00	1.00	1.00	1.00	1.00
FinalVolume:	28	445	17	65	73	25	18	228	4	7	162	67
Saturation Flow Module:												
Adjustment:	1.00	1.00	1.00	1.00	1.00	1.00	1.00	1.00	1.00	1.00	1.00	1.00
Lanes:	0.06	0.91	0.03	0.40	0.45	0.15	0.07	0.91	0.02	0.04	0.96	1.00
Final Sat.:	36	567	22	209	235	81	38	483	8	20	468	541
Capacity Analysis Module:												
Vol/Sat:	0.78	0.78	0.78	0.31	0.31	0.31	0.47	0.47	0.47	0.35	0.35	0.12
Crit Moves:		****		****			****				****	
Delay/Veh:	24.8	24.8	24.8	11.6	11.6	11.6	14.1	14.1	14.1	12.7	12.7	9.6
Delay Adj:	1.00	1.00	1.00	1.00	1.00	1.00	1.00	1.00	1.00	1.00	1.00	1.00
AdjDel/Veh:	24.8	24.8	24.8	11.6	11.6	11.6	14.1	14.1	14.1	12.7	12.7	9.6
LOS by Move:	C	C	C	B	B	B	B	B	B	B	B	A
ApproachDel:	24.8			11.6			14.1			11.8		
Delay Adj:	1.00			1.00			1.00			1.00		
ApprAdjDel:	24.8			11.6			14.1			11.8		
LOS by Appr:	C			B			B			B		
AllWayAvgQ:	2.8	2.8	2.8	0.4	0.4	0.4	0.7	0.7	0.7	0.4	0.4	0.1

Traffix 7.9.0415 (c) 2007 Dowling Assoc. Licensed to MMA, LONG BEACH, CA

Overlook Parkway Extension
Ex Open + Alt4A
AM Peak Hour

Note: Queue reported is the number of cars per lane.

Overlook Parkway Extension
Ex Open + Alt4A
AM Peak Hour

Level Of Service Computation Report
2000 HCM Operations Method (Future Volume Alternative)

Intersection #9 Washington St/Overlook Pkwy

Cycle (sec): 100 Critical Vol./Cap.(X): 0.955
Loss Time (sec): 12 (Y+R=4.0 sec) Average Delay (sec/veh): 48.0
Optimal Cycle: 130 Level Of Service: D

Street Name:	Washington St						Overlook Pkwy					
Approach:	North Bound			South Bound			East Bound			West Bound		
Movement:	L - T - R			L - T - R			L - T - R			L - T - R		
Control:	Protected			Protected			Protected			Protected		
Rights:	Include			Include			Include			Ovl		
Min. Green:	7	7	7	7	7	7	7	7	7	7	7	7
Lanes:	0 0	1 1	0	1 0	2 0	0	0 0	0 0	0	1 0	0 0	1
Volume Module:												
Base Vol:	0	913	18	362	273	0	0	0	0	26	0	940
Growth Adj:	1.00	1.00	1.00	1.00	1.00	1.00	1.00	1.00	1.00	1.00	1.00	1.00
Initial Bse:	0	913	18	362	273	0	0	0	0	26	0	940
Added Vol:	0	0	0	0	0	0	0	0	0	0	0	0
PasserByVol:	0	0	0	0	0	0	0	0	0	0	0	0
Initial Fut:	0	913	18	362	273	0	0	0	0	26	0	940
User Adj:	1.00	1.00	1.00	1.00	1.00	1.00	1.00	1.00	1.00	1.00	1.00	1.00
PHF Adj:	1.00	1.00	1.00	1.00	1.00	1.00	1.00	1.00	1.00	1.00	1.00	1.00
PHF Volume:	0	913	18	362	273	0	0	0	0	26	0	940
Reduct Vol:	0	0	0	0	0	0	0	0	0	0	0	0
Reduced Vol:	0	913	18	362	273	0	0	0	0	26	0	940
PCE Adj:	1.00	1.00	1.00	1.00	1.00	1.00	1.00	1.00	1.00	1.00	1.00	1.00
MLF Adj:	1.00	1.00	1.00	1.00	1.00	1.00	1.00	1.00	1.00	1.00	1.00	1.00
FinalVolume:	0	913	18	362	273	0	0	0	0	26	0	940
Saturation Flow Module:												
Sat/Lane:	1900	1900	1900	1900	1900	1900	1900	1900	1900	1900	1900	1900
Adjustment:	1.00	0.95	0.95	0.95	0.95	1.00	1.00	1.00	1.00	0.95	1.00	0.85
Lanes:	0.00	1.96	0.04	1.00	2.00	0.00	0.00	0.00	0.00	1.00	0.00	1.00
Final Sat.:	0	3530	70	1805	3610	0	0	0	0	1805	0	1615
Capacity Analysis Module:												
Vol/Sat:	0.00	0.26	0.26	0.20	0.08	0.00	0.00	0.00	0.00	0.01	0.00	0.58
Crit Moves:		****		****								****
Green/Cycle:	0.00	0.27	0.27	0.21	0.25	0.00	0.00	0.00	0.00	0.23	0.00	0.61
Volume/Cap:	0.00	0.96	0.96	0.96	0.30	0.00	0.00	0.00	0.00	0.06	0.00	0.96
Delay/Veh:	0.0	54.8	54.8	73.7	30.6	0.0	0.0	0.0	0.0	29.8	0.0	37.1
User DelAdj:	1.00	1.00	1.00	1.00	1.00	1.00	1.00	1.00	1.00	1.00	1.00	1.00
AdjDel/Veh:	0.0	54.8	54.8	73.7	30.6	0.0	0.0	0.0	0.0	29.8	0.0	37.1
LOS by Move:	A	D	D	E	C	A	A	A	A	C	A	D
HCM2kAvgQ:	0	20	20	16	4	0	0	0	0	1	0	33

Note: Queue reported is the number of cars per lane.

Overlook Parkway Extension
Ex Open + Alt4A
AM Peak Hour

Level Of Service Computation Report
2000 HCM Operations Method (Future Volume Alternative)

Intersection #10 Riverside Ave-SR-91 WB/Arlington Ave

Cycle (sec): 100 | Critical Vol./Cap.(X): 0.789
Loss Time (sec): 12 (Y+R=4.0 sec) | Average Delay (sec/veh): 31.1
Optimal Cycle: 75 | Level Of Service: C

Street Name:	Riverside Ave-SR-91 WB						Arlington Ave					
Approach:	North Bound			South Bound			East Bound			West Bound		
Movement:	L - T - R			L - T - R			L - T - R			L - T - R		
Control:	Protected			Protected			Protected			Protected		
Rights:	Include			Ovl			Ignore			Ignore		
Min. Green:	7	7	7	7	7	7	7	7	7	7	7	7
Lanes:	0 0	0 0	0	1 1	0 0	1	1 0	3 0	1	1 0	2 0	1
Volume Module:												
Base Vol:	0	0	0	443	44	531	84	779	141	473	939	270
Growth Adj:	1.00	1.00	1.00	1.00	1.00	1.00	1.00	1.00	1.00	1.00	1.00	1.00
Initial Bse:	0	0	0	443	44	531	84	779	141	473	939	270
Added Vol:	0	0	0	0	0	0	0	0	0	0	0	0
PasserByVol:	0	0	0	0	0	0	0	0	0	0	0	0
Initial Fut:	0	0	0	443	44	531	84	779	141	473	939	270
User Adj:	1.00	1.00	1.00	1.00	1.00	1.00	1.00	1.00	0.00	1.00	1.00	0.00
PHF Adj:	1.00	1.00	1.00	1.00	1.00	1.00	1.00	1.00	0.00	1.00	1.00	0.00
PHF Volume:	0	0	0	443	44	531	84	779	0	473	939	0
Reduct Vol:	0	0	0	0	0	0	0	0	0	0	0	0
Reduced Vol:	0	0	0	443	44	531	84	779	0	473	939	0
PCE Adj:	1.00	1.00	1.00	1.00	1.00	1.00	1.00	1.00	0.00	1.00	1.00	0.00
MLF Adj:	1.00	1.00	1.00	1.00	1.00	1.00	1.00	1.00	0.00	1.00	1.00	0.00
FinalVolume:	0	0	0	443	44	531	84	779	0	473	939	0
Saturation Flow Module:												
Sat/Lane:	1900	1900	1900	1900	1900	1900	1900	1900	1900	1900	1900	1900
Adjustment:	1.00	1.00	1.00	0.94	0.94	0.85	0.95	0.91	1.00	0.95	0.95	1.00
Lanes:	0.00	0.00	0.00	1.82	0.18	1.00	1.00	3.00	1.00	1.00	2.00	1.00
Final Sat.:	0	0	0	3232	321	1615	1805	5187	1900	1805	3610	1900
Capacity Analysis Module:												
Vol/Sat:	0.00	0.00	0.00	0.14	0.14	0.33	0.05	0.15	0.00	0.26	0.26	0.00
Crit Moves:						****		****		****		
Green/Cycle:	0.00	0.00	0.00	0.27	0.34	0.45	0.11	0.20	0.00	0.34	0.43	0.00
Volume/Cap:	0.00	0.00	0.00	0.51	0.40	0.72	0.41	0.76	0.00	0.76	0.61	0.00
Delay/Veh:	0.0	0.0	0.0	31.2	25.5	25.8	42.4	41.4	0.0	34.7	23.0	0.0
User DelAdj:	1.00	1.00	1.00	1.00	1.00	1.00	1.00	1.00	1.00	1.00	1.00	1.00
AdjDel/Veh:	0.0	0.0	0.0	31.2	25.5	25.8	42.4	41.4	0.0	34.7	23.0	0.0
LOS by Move:	A	A	A	C	C	C	D	D	A	C	C	A
HCM2kAvgQ:	0	0	0	7	6	14	3	10	0	14	12	0

Note: Queue reported is the number of cars per lane.

Traffix 7.9.0415 (c) 2007 Dowling Assoc. Licensed to MMA, LONG BEACH, CA

Overlook Parkway Extension
Ex Open + Alt4A
AM Peak Hour

Level Of Service Computation Report
2000 HCM Operations Method (Future Volume Alternative)

Intersection #11 Indiana Ave-SR-91 EB/Arlington Ave

Cycle (sec): 100 | Critical Vol./Cap.(X): 0.659
Loss Time (sec): 12 (Y+R=4.0 sec) | Average Delay (sec/veh): 26.0
Optimal Cycle: 54 | Level Of Service: C

Street Name:	Indiana Ave-SR-91 EB						Arlington Ave					
Approach:	North Bound			South Bound			East Bound			West Bound		
Movement:	L - T - R			L - T - R			L - T - R			L - T - R		
Control:	Protected			Protected			Protected			Protected		
Rights:	Ovl			Include			Ovl			Ignore		
Min. Green:	7	7	7	7	7	7	7	7	7	7	7	7
Lanes:	1 1	1 0	1	0 0	0 0	0	1 0	2 0	1	1 0	4 0	1
Volume Module:												
Base Vol:	182	427	399	0	0	0	276	770	138	75	1532	419
Growth Adj:	1.00	1.00	1.00	1.00	1.00	1.00	1.00	1.00	1.00	1.00	1.00	1.00
Initial Bse:	182	427	399	0	0	0	276	770	138	75	1532	419
Added Vol:	0	0	0	0	0	0	0	0	0	0	0	0
PasserByVol:	0	0	0	0	0	0	0	0	0	0	0	0
Initial Fut:	182	427	399	0	0	0	276	770	138	75	1532	419
User Adj:	1.00	1.00	1.00	1.00	1.00	1.00	1.00	1.00	1.00	1.00	1.00	0.00
PHF Adj:	1.00	1.00	1.00	1.00	1.00	1.00	1.00	1.00	1.00	1.00	1.00	0.00
PHF Volume:	182	427	399	0	0	0	276	770	138	75	1532	0
Reduct Vol:	0	0	0	0	0	0	0	0	0	0	0	0
Reduced Vol:	182	427	399	0	0	0	276	770	138	75	1532	0
PCE Adj:	1.00	1.00	1.00	1.00	1.00	1.00	1.00	1.00	1.00	1.00	1.00	0.00
MLF Adj:	1.00	1.00	1.00	1.00	1.00	1.00	1.00	1.00	1.00	1.00	1.00	0.00
FinalVolume:	182	427	399	0	0	0	276	770	138	75	1532	0
Saturation Flow Module:												
Sat/Lane:	1900	1900	1900	1900	1900	1900	1900	1900	1900	1900	1900	1900
Adjustment:	0.92	0.92	0.85	1.00	1.00	1.00	0.95	0.95	0.85	0.95	0.91	1.00
Lanes:	1.00	2.00	1.00	0.00	0.00	0.00	1.00	2.00	1.00	1.00	4.00	1.00
Final Sat.:	1756	3513	1615	0	0	0	1805	3610	1615	1805	6916	1900
Capacity Analysis Module:												
Vol/Sat:	0.10	0.12	0.25	0.00	0.00	0.00	0.15	0.21	0.09	0.04	0.22	0.00
Crit Moves:			****				****				****	
Green/Cycle:	0.21	0.28	0.43	0.00	0.00	0.00	0.24	0.45	0.66	0.15	0.35	0.00
Volume/Cap:	0.49	0.43	0.57	0.00	0.00	0.00	0.63	0.47	0.13	0.28	0.63	0.00
Delay/Veh:	35.1	29.5	22.7	0.0	0.0	0.0	36.6	19.5	6.4	38.5	27.4	0.0
User DelAdj:	1.00	1.00	1.00	1.00	1.00	1.00	1.00	1.00	1.00	1.00	1.00	1.00
AdjDel/Veh:	35.1	29.5	22.7	0.0	0.0	0.0	36.6	19.5	6.4	38.5	27.4	0.0
LOS by Move:	D	C	C	A	A	A	D	B	A	D	C	A
HCM2kAvgQ:	6	6	10	0	0	0	8	9	2	2	11	0

Note: Queue reported is the number of cars per lane.

Traffix 7.9.0415 (c) 2007 Dowling Assoc. Licensed to MMA, LONG BEACH, CA

Overlook Parkway Extension
Ex Open + Alt4A
AM Peak Hour

Level Of Service Computation Report
2000 HCM Operations Method (Future Volume Alternative)

Intersection #12 Victoria Ave/Arlington Ave

Cycle (sec): 100 Critical Vol./Cap.(X): 0.930
Loss Time (sec): 16 (Y+R=4.0 sec) Average Delay (sec/veh): 42.1
Optimal Cycle: 130 Level Of Service: D

Street Name:	Victoria Ave						Arlington Ave					
Approach:	North Bound			South Bound			East Bound			West Bound		
Movement:	L -	T -	R	L -	T -	R	L -	T -	R	L -	T -	R
Control:	Protected			Protected			Protected			Protected		
Rights:	Ovl			Include			Include			Include		
Min. Green:	7	7	7	7	7	7	7	7	7	7	7	7
Lanes:	1 0	1 0	1	1 0	1 0	1	1 0	1 1	0	1 0	1 1	0
Volume Module:												
Base Vol:	30	422	337	132	235	156	157	703	5	237	1239	174
Growth Adj:	1.00	1.00	1.00	1.00	1.00	1.00	1.00	1.00	1.00	1.00	1.00	1.00
Initial Bse:	30	422	337	132	235	156	157	703	5	237	1239	174
Added Vol:	0	0	0	0	0	0	0	0	0	0	0	0
PasserByVol:	0	0	0	0	0	0	0	0	0	0	0	0
Initial Fut:	30	422	337	132	235	156	157	703	5	237	1239	174
User Adj:	1.00	1.00	1.00	1.00	1.00	1.00	1.00	1.00	1.00	1.00	1.00	1.00
PHF Adj:	1.00	1.00	1.00	1.00	1.00	1.00	1.00	1.00	1.00	1.00	1.00	1.00
PHF Volume:	30	422	337	132	235	156	157	703	5	237	1239	174
Reduct Vol:	0	0	0	0	0	0	0	0	0	0	0	0
Reduced Vol:	30	422	337	132	235	156	157	703	5	237	1239	174
PCE Adj:	1.00	1.00	1.00	1.00	1.00	1.00	1.00	1.00	1.00	1.00	1.00	1.00
MLF Adj:	1.00	1.00	1.00	1.00	1.00	1.00	1.00	1.00	1.00	1.00	1.00	1.00
FinalVolume:	30	422	337	132	235	156	157	703	5	237	1239	174
Saturation Flow Module:												
Sat/Lane:	1900	1900	1900	1900	1900	1900	1900	1900	1900	1900	1900	1900
Adjustment:	0.95	1.00	0.85	0.95	1.00	0.85	0.95	0.95	0.95	0.95	0.93	0.93
Lanes:	1.00	1.00	1.00	1.00	1.00	1.00	1.00	1.99	0.01	1.00	1.75	0.25
Final Sat.:	1805	1900	1615	1805	1900	1615	1805	3581	25	1805	3108	437
Capacity Analysis Module:												
Vol/Sat:	0.02	0.22	0.21	0.07	0.12	0.10	0.09	0.20	0.20	0.13	0.40	0.40
Crit Moves:		****		****			****				****	
Green/Cycle:	0.11	0.24	0.45	0.08	0.20	0.20	0.09	0.31	0.31	0.21	0.43	0.43
Volume/Cap:	0.14	0.93	0.47	0.93	0.61	0.48	0.93	0.63	0.63	0.63	0.93	0.93
Delay/Veh:	40.2	62.9	19.7	100.3	39.1	36.3	94.0	30.5	30.5	39.3	37.6	37.6
User DelAdj:	1.00	1.00	1.00	1.00	1.00	1.00	1.00	1.00	1.00	1.00	1.00	1.00
AdjDel/Veh:	40.2	62.9	19.7	100.3	39.1	36.3	94.0	30.5	30.5	39.3	37.6	37.6
LOS by Move:	D	E	B	F	D	D	F	C	C	D	D	D
HCM2kAvgQ:	1	17	7	7	7	5	8	10	10	8	26	26

Note: Queue reported is the number of cars per lane.

Traffix 7.9.0415 (c) 2007 Dowling Assoc. Licensed to MMA, LONG BEACH, CA

Overlook Parkway Extension
Ex Open + Alt4A
AM Peak Hour

Level Of Service Computation Report
2000 HCM Operations Method (Future Volume Alternative)

Intersection #13 Alessandro Blvd/Arlington Ave

Cycle (sec): 100 Critical Vol./Cap.(X): 0.675
Loss Time (sec): 16 (Y+R=4.0 sec) Average Delay (sec/veh): 27.7
Optimal Cycle: 66 Level Of Service: C

Street Name:	Alessandro Blvd						Arlington Ave					
Approach:	North Bound			South Bound			East Bound			West Bound		
Movement:	L -	T -	R	L -	T -	R	L -	T -	R	L -	T -	R
Control:	Protected			Protected			Protected			Protected		
Rights:	Ovl			Include			Ovl			Ovl		
Min. Green:	7	7	7	7	7	7	7	7	7	7	7	7
Lanes:	2 0	2 0	1	2 0	2 1	0	1 0	2 0	2	2 0	2 0	1
Volume Module:												
Base Vol:	1003	1190	416	220	334	25	23	514	502	113	505	229
Growth Adj:	1.00	1.00	1.00	1.00	1.00	1.00	1.00	1.00	1.00	1.00	1.00	1.00
Initial Bse:	1003	1190	416	220	334	25	23	514	502	113	505	229
Added Vol:	0	0	0	0	0	0	0	0	0	0	0	0
PasserByVol:	0	0	0	0	0	0	0	0	0	0	0	0
Initial Fut:	1003	1190	416	220	334	25	23	514	502	113	505	229
User Adj:	1.00	1.00	1.00	1.00	1.00	1.00	1.00	1.00	1.00	1.00	1.00	1.00
PHF Adj:	1.00	1.00	1.00	1.00	1.00	1.00	1.00	1.00	1.00	1.00	1.00	1.00
PHF Volume:	1003	1190	416	220	334	25	23	514	502	113	505	229
Reduct Vol:	0	0	0	0	0	0	0	0	0	0	0	0
Reduced Vol:	1003	1190	416	220	334	25	23	514	502	113	505	229
PCE Adj:	1.00	1.00	1.00	1.00	1.00	1.00	1.00	1.00	1.00	1.00	1.00	1.00
MLF Adj:	1.00	1.00	1.00	1.00	1.00	1.00	1.00	1.00	1.00	1.00	1.00	1.00
FinalVolume:	1003	1190	416	220	334	25	23	514	502	113	505	229
Saturation Flow Module:												
Sat/Lane:	1900	1900	1900	1900	1900	1900	1900	1900	1900	1900	1900	1900
Adjustment:	0.92	0.95	0.85	0.92	0.90	0.90	0.95	0.95	0.75	0.92	0.95	0.85
Lanes:	2.00	2.00	1.00	2.00	2.79	0.21	1.00	2.00	2.00	2.00	2.00	1.00
Final Sat.:	3502	3610	1615	3502	4778	358	1805	3610	2842	3502	3610	1615
Capacity Analysis Module:												
Vol/Sat:	0.29	0.33	0.26	0.06	0.07	0.07	0.01	0.14	0.18	0.03	0.14	0.14
Crit Moves:		****		****				****		****		
Green/Cycle:	0.45	0.47	0.54	0.09	0.11	0.11	0.09	0.20	0.66	0.07	0.18	0.27
Volume/Cap:	0.63	0.69	0.47	0.69	0.63	0.63	0.14	0.69	0.27	0.46	0.76	0.52
Delay/Veh:	21.7	21.9	14.4	50.7	44.8	44.8	42.2	39.7	7.1	46.1	44.0	31.8
User DelAdj:	1.00	1.00	1.00	1.00	1.00	1.00	1.00	1.00	1.00	1.00	1.00	1.00
AdjDel/Veh:	21.7	21.9	14.4	50.7	44.8	44.8	42.2	39.7	7.1	46.1	44.0	31.8
LOS by Move:	C	C	B	D	D	D	D	D	A	D	D	C
HCM2kAvgQ:	13	16	8	5	5	5	1	9	4	2	10	6

Note: Queue reported is the number of cars per lane.

Traffix 7.9.0415 (c) 2007 Dowling Assoc. Licensed to MMA, LONG BEACH, CA

Overlook Parkway Extension
Ex Open + Alt4A
AM Peak Hour

Level Of Service Computation Report
2000 HCM Operations Method (Future Volume Alternative)

Intersection #14 Alessandro Blvd/Overlook Pkwy

Cycle (sec):	100	Critical Vol./Cap.(X):	0.874
Loss Time (sec):	16 (Y+R=4.0 sec)	Average Delay (sec/veh):	36.5
Optimal Cycle:	107	Level Of Service:	D

Street Name:	Alessandro Blvd						Overlook Pkwy					
Approach:	North Bound			South Bound			East Bound			West Bound		
Movement:	L - T - R			L - T - R			L - T - R			L - T - R		
Control:	Protected			Protected			Protected			Protected		
Rights:	Include			Include			Include			Include		
Min. Green:	7	7	7	7	7	7	7	7	7	7	7	7
Lanes:	1 0	3 0	1	1 0	2 1	0	1 0	1 1	0	3 0	0 1	0
Volume Module:												
Base Vol:	560	2380	844	3	826	77	88	39	255	249	167	8
Growth Adj:	1.00	1.00	1.00	1.00	1.00	1.00	1.00	1.00	1.00	1.00	1.00	1.00
Initial Bse:	560	2380	844	3	826	77	88	39	255	249	167	8
Added Vol:	0	0	0	0	0	0	0	0	0	0	0	0
PasserByVol:	0	0	0	0	0	0	0	0	0	0	0	0
Initial Fut:	560	2380	844	3	826	77	88	39	255	249	167	8
User Adj:	1.00	1.00	1.00	1.00	1.00	1.00	1.00	1.00	1.00	1.00	1.00	1.00
PHF Adj:	1.00	1.00	1.00	1.00	1.00	1.00	1.00	1.00	1.00	1.00	1.00	1.00
PHF Volume:	560	2380	844	3	826	77	88	39	255	249	167	8
Reduct Vol:	0	0	0	0	0	0	0	0	0	0	0	0
Reduced Vol:	560	2380	844	3	826	77	88	39	255	249	167	8
PCE Adj:	1.00	1.00	1.00	1.00	1.00	1.00	1.00	1.00	1.00	1.00	1.00	1.00
MLF Adj:	1.00	1.00	1.00	1.00	1.00	1.00	1.00	1.00	1.00	1.00	1.00	1.00
FinalVolume:	560	2380	844	3	826	77	88	39	255	249	167	8
Saturation Flow Module:												
Sat/Lane:	1900	1900	1900	1900	1900	1900	1900	1900	1900	1900	1900	1900
Adjustment:	0.95	0.91	0.85	0.95	0.90	0.90	0.95	0.83	0.83	0.92	0.99	0.99
Lanes:	1.00	3.00	1.00	1.00	2.74	0.26	1.00	1.00	1.00	3.00	0.95	0.05
Final Sat.:	1805	5187	1615	1805	4683	437	1805	1570	1570	5253	1800	86
Capacity Analysis Module:												
Vol/Sat:	0.31	0.46	0.52	0.00	0.18	0.18	0.05	0.02	0.16	0.05	0.09	0.09
Crit Moves:			****	****					****	****		
Green/Cycle:	0.39	0.53	0.53	0.07	0.22	0.22	0.10	0.17	0.17	0.07	0.13	0.13
Volume/Cap:	0.81	0.86	0.98	0.02	0.81	0.81	0.48	0.15	0.98	0.68	0.69	0.69
Delay/Veh:	34.3	23.0	48.1	43.4	41.4	41.4	44.4	35.7	87.4	50.4	49.1	49.1
User DelAdj:	1.00	1.00	1.00	1.00	1.00	1.00	1.00	1.00	1.00	1.00	1.00	1.00
AdjDel/Veh:	34.3	23.0	48.1	43.4	41.4	41.4	44.4	35.7	87.4	50.4	49.1	49.1
LOS by Move:	C	C	D	D	D	D	D	D	F	D	D	D
HCM2kAvgQ:	17	26	32	0	12	12	3	1	13	4	7	7

Note: Queue reported is the number of cars per lane.

Traffix 7.9.0415 (c) 2007 Dowling Assoc. Licensed to MMA, LONG BEACH, CA

Overlook Parkway Extension
Ex Open + Alt4A
AM Peak Hour

Level Of Service Computation Report
2000 HCM Operations Method (Future Volume Alternative)

Intersection #15 Alessandro Blvd/Trautwein Rd

Cycle (sec):	100	Critical Vol./Cap.(X):	0.855
Loss Time (sec):	12 (Y+R=4.0 sec)	Average Delay (sec/veh):	34.4
Optimal Cycle:	92	Level Of Service:	C

Street Name:	Alessandro Blvd						Trautwein Rd					
Approach:	North Bound			South Bound			East Bound			West Bound		
Movement:	L - T - R			L - T - R			L - T - R			L - T - R		
Control:	Protected			Protected			Protected			Protected		
Rights:	Include			Ignore			Ignore			Include		
Min. Green:	7	7	7	7	7	7	7	7	7	7	7	7
Lanes:	2 0	3 0	0	0 0	3 0	1	3 0	0 0	1	0 0	0 0	0
Volume Module:												
Base Vol:	92	2057	0	0	870	515	1871	0	152	0	0	0
Growth Adj:	1.00	1.00	1.00	1.00	1.00	1.00	1.00	1.00	1.00	1.00	1.00	1.00
Initial Bse:	92	2057	0	0	870	515	1871	0	152	0	0	0
Added Vol:	0	0	0	0	0	0	0	0	0	0	0	0
PasserByVol:	0	0	0	0	0	0	0	0	0	0	0	0
Initial Fut:	92	2057	0	0	870	515	1871	0	152	0	0	0
User Adj:	1.00	1.00	1.00	1.00	1.00	0.00	1.00	1.00	0.00	1.00	1.00	1.00
PHF Adj:	1.00	1.00	1.00	1.00	1.00	0.00	1.00	1.00	0.00	1.00	1.00	1.00
PHF Volume:	92	2057	0	0	870	0	1871	0	0	0	0	0
Reduct Vol:	0	0	0	0	0	0	0	0	0	0	0	0
Reduced Vol:	92	2057	0	0	870	0	1871	0	0	0	0	0
PCE Adj:	1.00	1.00	1.00	1.00	1.00	0.00	1.00	1.00	0.00	1.00	1.00	1.00
MLF Adj:	1.00	1.00	1.00	1.00	1.00	0.00	1.00	1.00	0.00	1.00	1.00	1.00
FinalVolume:	92	2057	0	0	870	0	1871	0	0	0	0	0
Saturation Flow Module:												
Sat/Lane:	1900	1900	1900	1900	1900	1900	1900	1900	1900	1900	1900	1900
Adjustment:	0.92	0.91	1.00	1.00	0.91	1.00	0.92	1.00	1.00	1.00	1.00	1.00
Lanes:	2.00	3.00	0.00	0.00	3.00	1.00	3.00	0.00	1.00	0.00	0.00	0.00
Final Sat.:	3502	5187	0	0	5187	1900	5253	0	1900	0	0	0
Capacity Analysis Module:												
Vol/Sat:	0.03	0.40	0.00	0.00	0.17	0.00	0.36	0.00	0.00	0.00	0.00	0.00
Crit Moves:		****		****			****					
Green/Cycle:	0.15	0.43	0.00	0.00	0.35	0.00	0.38	0.00	0.00	0.00	0.00	0.00
Volume/Cap:	0.18	0.93	0.00	0.00	0.48	0.00	0.93	0.00	0.00	0.00	0.00	0.00
Delay/Veh:	37.6	34.9	0.0	0.0	25.5	0.0	37.8	0.0	0.0	0.0	0.0	0.0
User DelAdj:	1.00	1.00	1.00	1.00	1.00	1.00	1.00	1.00	1.00	1.00	1.00	1.00
AdjDel/Veh:	37.6	34.9	0.0	0.0	25.5	0.0	37.8	0.0	0.0	0.0	0.0	0.0
LOS by Move:	D	C	A	A	C	A	D	A	A	A	A	A
HCM2kAvgQ:	1	27	0	0	8	0	24	0	0	0	0	0

Note: Queue reported is the number of cars per lane.

Traffix 7.9.0415 (c) 2007 Dowling Assoc. Licensed to MMA, LONG BEACH, CA

Overlook Parkway Extension
Ex Open + Alt4A
AM Peak Hour

Level Of Service Computation Report
2000 HCM 4-Way Stop Method (Future Volume Alternative)

Intersection #16 Crystal View Ter/Overlook Pkwy

Cycle (sec):	100	Critical Vol./Cap.(X):	0.581
Loss Time (sec):	0 (Y+R=4.0 sec)	Average Delay (sec/veh):	13.0
Optimal Cycle:	0	Level Of Service:	B

Street Name:	Crystal View Ter							Overlook Pkwy					
Approach:	North Bound			South Bound			East Bound			West Bound			
Movement:	L	- T	- R	L	- T	- R	L	- T	- R	L	- T	- R	
Control:	Stop Sign			Stop Sign			Stop Sign			Stop Sign			
Rights:	Include			Include			Include			Include			
Min. Green:	7	7	7	7	7	7	7	7	7	7	7	7	
Lanes:	0 0	1! 0	0	0 0	1! 0	0	1 0	1 1	0	1 0	1 1	0	
Volume Module:													
Base Vol:	60	0	26	0	0	0	0	348	40	10	805	0	
Growth Adj:	1.00	1.00	1.00	1.00	1.00	1.00	1.00	1.00	1.00	1.00	1.00	1.00	
Initial Bse:	60	0	26	0	0	0	0	348	40	10	805	0	
Added Vol:	0	0	0	0	0	0	0	0	0	0	0	0	
PasserByVol:	0	0	0	0	0	0	0	0	0	0	0	0	
Initial Fut:	60	0	26	0	0	0	0	348	40	10	805	0	
User Adj:	1.00	1.00	1.00	1.00	1.00	1.00	1.00	1.00	1.00	1.00	1.00	1.00	
PHF Adj:	1.00	1.00	1.00	1.00	1.00	1.00	1.00	1.00	1.00	1.00	1.00	1.00	
PHF Volume:	60	0	26	0	0	0	0	348	40	10	805	0	
Reduct Vol:	0	0	0	0	0	0	0	0	0	0	0	0	
Reduced Vol:	60	0	26	0	0	0	0	348	40	10	805	0	
PCE Adj:	1.00	1.00	1.00	1.00	1.00	1.00	1.00	1.00	1.00	1.00	1.00	1.00	
MLF Adj:	1.00	1.00	1.00	1.00	1.00	1.00	1.00	1.00	1.00	1.00	1.00	1.00	
FinalVolume:	60	0	26	0	0	0	0	348	40	10	805	0	
Saturation Flow Module:													
Adjustment:	1.00	1.00	1.00	1.00	1.00	1.00	1.00	1.00	1.00	1.00	1.00	1.00	
Lanes:	0.70	0.00	0.30	0.00	1.00	0.00	1.00	1.79	0.21	1.00	2.00	0.00	
Final Sat.:	395	0	171	0	529	0	573	1139	133	630	1386	0	
Capacity Analysis Module:													
Vol/Sat:	0.15	xxxx	0.15	xxxx	0.00	xxxx	0.00	0.31	0.30	0.02	0.58	xxxx	
Crit Moves:	****				****			****			****		
Delay/Veh:	10.0	0.0	10.0	0.0	0.0	0.0	0.0	10.6	10.4	8.4	14.6	0.0	
Delay Adj:	1.00	1.00	1.00	1.00	1.00	1.00	1.00	1.00	1.00	1.00	1.00	1.00	
AdjDel/Veh:	10.0	0.0	10.0	0.0	0.0	0.0	0.0	10.6	10.4	8.4	14.6	0.0	
LOS by Move:	B	*	B	*	*	*	*	B	B	A	B	*	
ApproachDel:	10.0			xxxxxx				10.6			14.5		
Delay Adj:	1.00			xxxxx				1.00			1.00		
ApprAdjDel:	10.0			xxxxxx				10.6			14.5		
LOS by Appr:	B			*				B			B		
AllWayAvgQ:	0.2	0.2	0.2	0.0	0.0	0.0	0.0	0.4	0.4	0.0	1.3	1.3	

Overlook Parkway Extension
Ex Open + Alt4A
AM Peak Hour

Note: Queue reported is the number of cars per lane.

Overlook Parkway Extension
Ex Open + Alt4A
AM Peak Hour

Level Of Service Computation Report
2000 HCM Unsignalized Method (Future Volume Alternative)

Intersection #17 Kingdom Dr/Overlook Pkwy

Average Delay (sec/veh): 1.2 Worst Case Level Of Service: D[25.6]

Street Name:	Kingdom Dr									Overlook Pkwy								
Approach:	North Bound					South Bound				East Bound					West Bound			
Movement:	L	-	T	-	R	L	-	T	-	R	L	-	T	-	R	L	-	T	-	R
Control:	Stop Sign					Stop Sign					Uncontrolled					Uncontrolled				
Rights:	Include					Include					Include					Include				
Lanes:	0	0	1!	0	0	1	0	0	0	0	1	0	1	1	0	1	0	1	1	0
Volume Module:																				
Base Vol:	39	0	37	4	0	0	0	341	25	28	803	0								
Growth Adj:	1.00	1.00	1.00	1.00	1.00	1.00	1.00	1.00	1.00	1.00	1.00	1.00								
Initial Bse:	39	0	37	4	0	0	0	341	25	28	803	0								
Added Vol:	0	0	0	0	0	0	0	0	0	0	0	0								
PasserByVol:	0	0	0	0	0	0	0	0	0	0	0	0								
Initial Fut:	39	0	37	4	0	0	0	341	25	28	803	0								
User Adj:	1.00	1.00	1.00	1.00	1.00	1.00	1.00	1.00	1.00	1.00	1.00	1.00								
PHF Adj:	1.00	1.00	1.00	1.00	1.00	1.00	1.00	1.00	1.00	1.00	1.00	1.00								
PHF Volume:	39	0	37	4	0	0	0	341	25	28	803	0								
Reduct Vol:	0	0	0	0	0	0	0	0	0	0	0	0								
FinalVolume:	39	0	37	4	0	0	0	341	25	28	803	0								
Critical Gap Module:																				
Critical Gp:	7.5	6.5	6.9	7.5	xxxx	xxxxx	xxxxx	xxxx	xxxxx	4.1	xxxx	xxxxx								
FollowUpTim:	3.5	4.0	3.3	3.5	xxxx	xxxxx	xxxxx	xxxx	xxxxx	2.2	xxxx	xxxxx								
Capacity Module:																				
Cnflict Vol:	811	1213	183	1030	xxxx	xxxxx	xxxx	xxxx	xxxxx	366	xxxx	xxxxx								
Potent Cap.:	274	184	834	191	xxxx	xxxxx	xxxx	xxxx	xxxxx	1204	xxxx	xxxxx								
Move Cap.:	270	179	834	179	xxxx	xxxxx	xxxx	xxxx	xxxxx	1204	xxxx	xxxxx								
Volume/Cap:	0.14	0.00	0.04	0.02	xxxx	xxxx	xxxx	xxxx	xxxx	0.02	xxxx	xxxx								
Level Of Service Module:																				
2Way95thQ:	xxxx	xxxx	xxxxx	0.1	xxxx	xxxxx	xxxx	xxxx	xxxxx	0.1	xxxx	xxxxx								
Control Del:	xxxxx	xxxx	xxxxx	25.6	xxxx	xxxxx	xxxxx	xxxx	xxxxx	8.1	xxxx	xxxxx								
LOS by Move:	*	*	*	D	*	*	*	*	*	A	*	*								
Movement:	LT -	LTR -	RT	LT -	LTR -	RT	LT -	LTR -	RT	LT -	LTR -	RT								
Shared Cap.:	xxxx	402	xxxxx	xxxx	xxxx	xxxxx	xxxx	xxxx	xxxxx	xxxx	xxxx	xxxxx								
SharedQueue:	xxxxx	0.7	xxxxx	xxxxx	xxxx	xxxxx	xxxxx	xxxx	xxxxx	xxxxx	xxxx	xxxxx								
Shrd ConDel:	xxxxx	16.0	xxxxx	xxxxx	xxxx	xxxxx	xxxxx	xxxx	xxxxx	xxxxx	xxxx	xxxxx								
Shared LOS:	*	C	*	*	*	*	*	*	*	*	*	*								
ApproachDel:	16.0			25.6			xxxxxx			xxxxxx										
ApproachLOS:	C			D			*			*										

Note: Queue reported is the number of cars per lane.

Overlook Parkway Extension
Ex Open + Alt4A
AM Peak Hour

Level Of Service Computation Report
2000 HCM Unsignalized Method (Future Volume Alternative)

Intersection #18 Kingdom Dr/Green Orchard Pl

Average Delay (sec/veh): 0.7 Worst Case Level Of Service: A[8.6]

Street Name:	Kingdom Dr									Green Orchard Pl								
Approach:	North Bound					South Bound				East Bound					West Bound			
Movement:	L	-	T	-	R	L	-	T	-	R	L	-	T	-	R	L	-	T	-	R
Control:	Uncontrolled					Uncontrolled					Stop Sign					Stop Sign				
Rights:	Include					Include					Include					Include				
Lanes:	0	0	1	0	0	0	1	0	0	0	0	0	0	0	0	0	0	0	0	1
Volume Module:																				
Base Vol:	0	70	0	7	36	0	0	0	0	0	0	4								
Growth Adj:	1.00	1.00	1.00	1.00	1.00	1.00	1.00	1.00	1.00	1.00	1.00	1.00								
Initial Bse:	0	70	0	7	36	0	0	0	0	0	0	4								
Added Vol:	0	0	0	0	0	0	0	0	0	0	0	0								
PasserByVol:	0	0	0	0	0	0	0	0	0	0	0	0								
Initial Fut:	0	70	0	7	36	0	0	0	0	0	0	4								
User Adj:	1.00	1.00	1.00	1.00	1.00	1.00	1.00	1.00	1.00	1.00	1.00	1.00								
PHF Adj:	1.00	1.00	1.00	1.00	1.00	1.00	1.00	1.00	1.00	1.00	1.00	1.00								
PHF Volume:	0	70	0	7	36	0	0	0	0	0	0	4								
Reduct Vol:	0	0	0	0	0	0	0	0	0	0	0	0								
FinalVolume:	0	70	0	7	36	0	0	0	0	0	0	4								
Critical Gap Module:																				
Critical Gp:	xxxxx	xxxx	xxxxx	4.1	xxxx	xxxxx	xxxxx	xxxx	xxxxx	xxxxx	xxxx	6.2								
FollowUpTim:	xxxxx	xxxx	xxxxx	2.2	xxxx	xxxxx	xxxxx	xxxx	xxxxx	xxxxx	xxxx	3.3								
Capacity Module:																				
Cnflict Vol:	xxxx	xxxx	xxxxx	70	xxxx	xxxxx	xxxx	xxxx	xxxxx	xxxx	xxxx	70								
Potent Cap.:	xxxx	xxxx	xxxxx	1544	xxxx	xxxxx	xxxx	xxxx	xxxxx	xxxx	xxxx	998								
Move Cap.:	xxxx	xxxx	xxxxx	1544	xxxx	xxxxx	xxxx	xxxx	xxxxx	xxxx	xxxx	998								
Volume/Cap:	xxxx	xxxx	xxxx	0.00	xxxx	xxxx	xxxx	xxxx	xxxx	xxxx	xxxx	0.00								
Level Of Service Module:																				
2Way95thQ:	xxxx	xxxx	xxxxx	0.0	xxxx	xxxxx	xxxx	xxxx	xxxxx	xxxx	xxxx	0.0								
Control Del:	xxxxx	xxxx	xxxxx	7.3	xxxx	xxxxx	xxxxx	xxxx	xxxxx	xxxxx	xxxx	8.6								
LOS by Move:	*	*	*	A	*	*	*	*	*	*	*	A								
Movement:	LT -	LTR -	RT	LT -	LTR -	RT	LT -	LTR -	RT	LT -	LTR -	RT								
Shared Cap.:	xxxx	xxxx	xxxxx	xxxx	xxxx	xxxxx	xxxx	xxxx	xxxxx	xxxx	xxxx	xxxxx								
SharedQueue:	xxxxx	xxxx	xxxxx	0.0	xxxx	xxxxx	xxxxx	xxxx	xxxxx	xxxxx	xxxx	xxxxx								
Shrd ConDel:	xxxxx	xxxx	xxxxx	7.3	xxxx	xxxxx	xxxxx	xxxx	xxxxx	xxxxx	xxxx	xxxxx								
Shared LOS:	*	*	*	A	*	*	*	*	*	*	*	*								
ApproachDel:	xxxxxx			xxxxxx			xxxxxx			8.6										
ApproachLOS:	*			*			*			A										

Note: Queue reported is the number of cars per lane.

Overlook Parkway Extension
Ex Open + Alt4A
AM Peak Hour

Level Of Service Computation Report
2000 HCM Operations Method (Future Volume Alternative)

Intersection #19 Trautwein Rd/John F. Kennedy Dr

Cycle (sec): 100 | Critical Vol./Cap.(X): 0.840
Loss Time (sec): 16 (Y+R=4.0 sec) | Average Delay (sec/veh): 32.2
Optimal Cycle: 97 | Level Of Service: C

Street Name:	Trautwein Rd						John F. Kennedy Dr					
Approach:	North Bound			South Bound			East Bound			West Bound		
Movement:	L - T - R			L - T - R			L - T - R			L - T - R		
Control:	Protected			Protected			Protected			Protected		
Rights:	Include			Ovl			Include			Include		
Min. Green:	7	7	7	7	7	7	7	7	7	7	7	7
Lanes:	1 0	2 0	1	1 0	2 0	1	2 0	1 0	1	1 0	0 1	0
Volume Module:												
Base Vol:	70	1760	64	7	607	417	518	58	56	94	59	58
Growth Adj:	1.00	1.00	1.00	1.00	1.00	1.00	1.00	1.00	1.00	1.00	1.00	1.00
Initial Bse:	70	1760	64	7	607	417	518	58	56	94	59	58
Added Vol:	0	0	0	0	0	0	0	0	0	0	0	0
PasserByVol:	0	0	0	0	0	0	0	0	0	0	0	0
Initial Fut:	70	1760	64	7	607	417	518	58	56	94	59	58
User Adj:	1.00	1.00	1.00	1.00	1.00	1.00	1.00	1.00	1.00	1.00	1.00	1.00
PHF Adj:	1.00	1.00	1.00	1.00	1.00	1.00	1.00	1.00	1.00	1.00	1.00	1.00
PHF Volume:	70	1760	64	7	607	417	518	58	56	94	59	58
Reduct Vol:	0	0	0	0	0	0	0	0	0	0	0	0
Reduced Vol:	70	1760	64	7	607	417	518	58	56	94	59	58
PCE Adj:	1.00	1.00	1.00	1.00	1.00	1.00	1.00	1.00	1.00	1.00	1.00	1.00
MLF Adj:	1.00	1.00	1.00	1.00	1.00	1.00	1.00	1.00	1.00	1.00	1.00	1.00
FinalVolume:	70	1760	64	7	607	417	518	58	56	94	59	58
Saturation Flow Module:												
Sat/Lane:	1900	1900	1900	1900	1900	1900	1900	1900	1900	1900	1900	1900
Adjustment:	0.95	0.95	0.85	0.95	0.95	0.85	0.92	1.00	0.85	0.95	0.93	0.93
Lanes:	1.00	2.00	1.00	1.00	2.00	1.00	2.00	1.00	1.00	1.00	0.50	0.50
Final Sat.:	1805	3610	1615	1805	3610	1615	3502	1900	1615	1805	887	872
Capacity Analysis Module:												
Vol/Sat:	0.04	0.49	0.04	0.00	0.17	0.26	0.15	0.03	0.03	0.05	0.07	0.07
Crit Moves:		****		****			****				****	
Green/Cycle:	0.18	0.53	0.53	0.07	0.43	0.59	0.16	0.12	0.12	0.12	0.07	0.07
Volume/Cap:	0.22	0.91	0.07	0.06	0.39	0.44	0.91	0.26	0.29	0.44	0.91	0.91
Delay/Veh:	35.5	28.1	11.3	43.6	19.9	11.7	60.2	40.8	41.2	42.5	99.2	99.2
User DelAdj:	1.00	1.00	1.00	1.00	1.00	1.00	1.00	1.00	1.00	1.00	1.00	1.00
AdjDel/Veh:	35.5	28.1	11.3	43.6	19.9	11.7	60.2	40.8	41.2	42.5	99.2	99.2
LOS by Move:	D	C	B	D	B	B	E	D	D	D	F	F
HCM2kAvgQ:	2	30	1	0	7	7	12	2	2	3	6	6

Note: Queue reported is the number of cars per lane.

Traffix 7.9.0415 (c) 2007 Dowling Assoc. Licensed to MMA, LONG BEACH, CA

Overlook Parkway Extension
Ex Open + Alt4A
AM Peak Hour

Level Of Service Computation Report
2000 HCM Operations Method (Future Volume Alternative)

Intersection #20 Washington St/Bradley St

Cycle (sec): 100 | Critical Vol./Cap.(X): 0.640
Loss Time (sec): 12 (Y+R=4.0 sec) | Average Delay (sec/veh): 19.4
Optimal Cycle: 52 | Level Of Service: B

Street Name:	Washington St						Bradley St					
Approach:	North Bound			South Bound			East Bound			West Bound		
Movement:	L - T - R			L - T - R			L - T - R			L - T - R		
Control:	Protected			Protected			Permitted			Permitted		
Rights:	Include			Include			Include			Include		
Min. Green:	7	7	7	7	7	7	7	7	7	7	7	7
Lanes:	1 0	1 0	1	1 0	0 1	0	0 0	1! 0	0	0 0	1! 0	0
Volume Module:												
Base Vol:	183	853	18	34	281	5	1	3	17	25	37	96
Growth Adj:	1.00	1.00	1.00	1.00	1.00	1.00	1.00	1.00	1.00	1.00	1.00	1.00
Initial Bse:	183	853	18	34	281	5	1	3	17	25	37	96
Added Vol:	0	0	0	0	0	0	0	0	0	0	0	0
PasserByVol:	0	0	0	0	0	0	0	0	0	0	0	0
Initial Fut:	183	853	18	34	281	5	1	3	17	25	37	96
User Adj:	1.00	1.00	1.00	1.00	1.00	1.00	1.00	1.00	1.00	1.00	1.00	1.00
PHF Adj:	1.00	1.00	1.00	1.00	1.00	1.00	1.00	1.00	1.00	1.00	1.00	1.00
PHF Volume:	183	853	18	34	281	5	1	3	17	25	37	96
Reduct Vol:	0	0	0	0	0	0	0	0	0	0	0	0
Reduced Vol:	183	853	18	34	281	5	1	3	17	25	37	96
PCE Adj:	1.00	1.00	1.00	1.00	1.00	1.00	1.00	1.00	1.00	1.00	1.00	1.00
MLF Adj:	1.00	1.00	1.00	1.00	1.00	1.00	1.00	1.00	1.00	1.00	1.00	1.00
FinalVolume:	183	853	18	34	281	5	1	3	17	25	37	96
Saturation Flow Module:												
Sat/Lane:	1900	1900	1900	1900	1900	1900	1900	1900	1900	1900	1900	1900
Adjustment:	0.95	1.00	0.85	0.95	1.00	1.00	0.88	0.88	0.88	0.87	0.87	0.87
Lanes:	1.00	1.00	1.00	1.00	0.98	0.02	0.05	0.14	0.81	0.16	0.23	0.61
Final Sat.:	1805	1900	1615	1805	1861	33	80	239	1355	262	388	1007
Capacity Analysis Module:												
Vol/Sat:	0.10	0.45	0.01	0.02	0.15	0.15	0.01	0.01	0.01	0.10	0.10	0.10
Crit Moves:		****		****							****	
Green/Cycle:	0.30	0.67	0.67	0.07	0.44	0.44	0.14	0.14	0.14	0.14	0.14	0.14
Volume/Cap:	0.34	0.67	0.02	0.27	0.34	0.34	0.09	0.09	0.09	0.67	0.67	0.67
Delay/Veh:	27.9	11.4	5.6	45.2	18.6	18.6	37.4	37.4	37.4	48.1	48.1	48.1
User DelAdj:	1.00	1.00	1.00	1.00	1.00	1.00	1.00	1.00	1.00	1.00	1.00	1.00
AdjDel/Veh:	27.9	11.4	5.6	45.2	18.6	18.6	37.4	37.4	37.4	48.1	48.1	48.1
LOS by Move:	C	B	A	D	B	B	D	D	D	D	D	D
HCM2kAvgQ:	4	16	0	1	6	6	1	1	1	6	6	6

Note: Queue reported is the number of cars per lane.

Traffix 7.9.0415 (c) 2007 Dowling Assoc. Licensed to MMA, LONG BEACH, CA

Overlook Parkway Extension
Ex Open + Alt4A
AM Peak Hour

Level Of Service Computation Report
2000 HCM Operations Method (Future Volume Alternative)

Intersection #21 Alessandro Blvd/Via Vista Dr

Cycle (sec):	100	Critical Vol./Cap.(X):	0.661
Loss Time (sec):	16 (Y+R=4.0 sec)	Average Delay (sec/veh):	18.1
Optimal Cycle:	64	Level Of Service:	B

Street Name:	Alessandro Blvd								Via Vista Dr					
Approach:	North Bound			South Bound			East Bound			West Bound				
Movement:	L	T	R	L	T	R	L	T	R	L	T	R		
Control:	Protected			Protected			Protected			Protected				
Rights:	Include			Include			Include			Include				
Min. Green:	7	7	7	7	7	7	7	7	7	7	7	7		
Lanes:	1	0 2	1 0	1	0 2	1 0	1	0 1	0 1	1	0 1	0 1		
Volume Module:														
Base Vol:	73	2361	14	15	884	26	89	49	73	28	35	63		
Growth Adj:	1.00	1.00	1.00	1.00	1.00	1.00	1.00	1.00	1.00	1.00	1.00	1.00		
Initial Bse:	73	2361	14	15	884	26	89	49	73	28	35	63		
Added Vol:	0	0	0	0	0	0	0	0	0	0	0	0		
PasserByVol:	0	0	0	0	0	0	0	0	0	0	0	0		
Initial Fut:	73	2361	14	15	884	26	89	49	73	28	35	63		
User Adj:	1.00	1.00	1.00	1.00	1.00	1.00	1.00	1.00	1.00	1.00	1.00	1.00		
PHF Adj:	1.00	1.00	1.00	1.00	1.00	1.00	1.00	1.00	1.00	1.00	1.00	1.00		
PHF Volume:	73	2361	14	15	884	26	89	49	73	28	35	63		
Reduct Vol:	0	0	0	0	0	0	0	0	0	0	0	0		
Reduced Vol:	73	2361	14	15	884	26	89	49	73	28	35	63		
PCE Adj:	1.00	1.00	1.00	1.00	1.00	1.00	1.00	1.00	1.00	1.00	1.00	1.00		
MLF Adj:	1.00	1.00	1.00	1.00	1.00	1.00	1.00	1.00	1.00	1.00	1.00	1.00		
FinalVolume:	73	2361	14	15	884	26	89	49	73	28	35	63		
Saturation Flow Module:														
Sat/Lane:	1900	1900	1900	1900	1900	1900	1900	1900	1900	1900	1900	1900		
Adjustment:	0.95	0.91	0.91	0.95	0.91	0.91	0.95	1.00	0.85	0.95	1.00	0.85		
Lanes:	1.00	2.98	0.02	1.00	2.91	0.09	1.00	1.00	1.00	1.00	1.00	1.00		
Final Sat.:	1805	5151	31	1805	5019	148	1805	1900	1615	1805	1900	1615		
Capacity Analysis Module:														
Vol/Sat:	0.04	0.46	0.46	0.01	0.18	0.18	0.05	0.03	0.05	0.02	0.02	0.04		
Crit Moves:		****		****			****					****		
Green/Cycle:	0.20	0.63	0.63	0.07	0.50	0.50	0.07	0.07	0.07	0.07	0.07	0.07		
Volume/Cap:	0.20	0.73	0.73	0.12	0.35	0.35	0.70	0.37	0.65	0.22	0.26	0.56		
Delay/Veh:	33.7	13.5	13.5	44.0	15.2	15.2	62.0	46.1	57.5	44.8	45.1	51.1		
User DelAdj:	1.00	1.00	1.00	1.00	1.00	1.00	1.00	1.00	1.00	1.00	1.00	1.00		
AdjDel/Veh:	33.7	13.5	13.5	44.0	15.2	15.2	62.0	46.1	57.5	44.8	45.1	51.1		
LOS by Move:	C	B	B	D	B	B	E	D	E	D	D	D		
HCM2kAvgQ:	2	19	19	1	6	6	4	2	3	1	1	3		

Note: Queue reported is the number of cars per lane.

Traffix 7.9.0415 (c) 2007 Dowling Assoc. Licensed to MMA, LONG BEACH, CA

Overlook Parkway Extension
Ex Open + Alt4A
AM Peak Hour

Level Of Service Computation Report
2000 HCM 4-Way Stop Method (Future Volume Alternative)

Intersection #23 Mary St/Hawarden Dr

Cycle (sec):	100	Critical Vol./Cap.(X):	0.162
Loss Time (sec):	0 (Y+R=4.0 sec)	Average Delay (sec/veh):	7.8
Optimal Cycle:	0	Level Of Service:	A

Street Name:	Mary St								Hawarden Dr					
Approach:	North Bound			South Bound			East Bound			West Bound				
Movement:	L	T	R	L	T	R	L	T	R	L	T	R		
Control:	Stop Sign			Stop Sign			Stop Sign			Stop Sign				
Rights:	Include			Include			Include			Include				
Min. Green:	7	7	7	7	7	7	7	7	7	7	7	7		
Lanes:	0	1 0	0 0	0	0 0	1 0	0	0 1	1! 0	0	0 0	0 0		
Volume Module:														
Base Vol:	4	133	0	0	31	27	91	0	1	0	0	0		
Growth Adj:	1.00	1.00	1.00	1.00	1.00	1.00	1.00	1.00	1.00	1.00	1.00	1.00		
Initial Bse:	4	133	0	0	31	27	91	0	1	0	0	0		
Added Vol:	0	0	0	0	0	0	0	0	0	0	0	0		
PasserByVol:	0	0	0	0	0	0	0	0	0	0	0	0		
Initial Fut:	4	133	0	0	31	27	91	0	1	0	0	0		
User Adj:	1.00	1.00	1.00	1.00	1.00	1.00	1.00	1.00	1.00	1.00	1.00	1.00		
PHF Adj:	1.00	1.00	1.00	1.00	1.00	1.00	1.00	1.00	1.00	1.00	1.00	1.00		
PHF Volume:	4	133	0	0	31	27	91	0	1	0	0	0		
Reduct Vol:	0	0	0	0	0	0	0	0	0	0	0	0		
Reduced Vol:	4	133	0	0	31	27	91	0	1	0	0	0		
PCE Adj:	1.00	1.00	1.00	1.00	1.00	1.00	1.00	1.00	1.00	1.00	1.00	1.00		
MLF Adj:	1.00	1.00	1.00	1.00	1.00	1.00	1.00	1.00	1.00	1.00	1.00	1.00		
FinalVolume:	4	133	0	0	31	27	91	0	1	0	0	0		
Saturation Flow Module:														
Adjustment:	1.00	1.00	1.00	1.00	1.00	1.00	1.00	1.00	1.00	1.00	1.00	1.00		
Lanes:	0.03	0.97	0.00	0.00	0.53	0.47	0.99	0.00	0.01	0.00	0.00	0.00		
Final Sat.:	25	822	0	0	473	412	767	0	8	0	0	0		
Capacity Analysis Module:														
Vol/Sat:	0.16	0.16	xxxx	xxxx	0.07	0.07	0.12	xxxx	0.12	xxxx	xxxx	xxxx		
Crit Moves:		****			****		****							
Delay/Veh:	8.0	8.0	0.0	0.0	7.2	7.2	8.1	0.0	8.1	0.0	0.0	0.0		
Delay Adj:	1.00	1.00	1.00	1.00	1.00	1.00	1.00	1.00	1.00	1.00	1.00	1.00		
AdjDel/Veh:	8.0	8.0	0.0	0.0	7.2	7.2	8.1	0.0	8.1	0.0	0.0	0.0		
LOS by Move:	A	A	*	*	A	A	A	*	A	*	*	*		
ApproachDel:	8.0				7.2		8.1			xxxxxx				
Delay Adj:	1.00				1.00		1.00			xxxxx				
ApprAdjDel:	8.0				7.2		8.1			xxxxxx				
LOS by Appr:	A				A		A			*				
AllWayAvgQ:	0.2	0.2	0.2	0.1	0.1	0.1	0.1	0.1	0.1	0.0	0.0	0.0		

Traffix 7.9.0415 (c) 2007 Dowling Assoc. Licensed to MMA, LONG BEACH, CA

Overlook Parkway Extension
Ex Open + Alt4A
AM Peak Hour

Note: Queue reported is the number of cars per lane.

Overlook Parkway Extension
Ex Open + Alt4A
AM Peak Hour

Level Of Service Computation Report
2000 HCM 4-Way Stop Method (Future Volume Alternative)

Intersection #24 Hawarden Dr/Overlook Pkwy

Cycle (sec):	100	Critical Vol./Cap.(X):	0.662
Loss Time (sec):	0 (Y+R=4.0 sec)	Average Delay (sec/veh):	15.2
Optimal Cycle:	0	Level Of Service:	C

Street Name:	Hawarden Dr						Overlook Pkwy					
Approach:	North Bound			South Bound			East Bound			West Bound		
Movement:	L - T - R			L - T - R			L - T - R			L - T - R		
Control:	Stop Sign			Stop Sign			Stop Sign			Stop Sign		
Rights:	Include			Include			Include			Include		
Min. Green:	7	7	7	7	7	7	7	7	7	7	7	7
Lanes:	0 0	1! 0	0	0 0	1! 0	0	1 0	1 1	0	1 0	1 1	0
Volume Module:												
Base Vol:	73	37	12	16	6	11	9	305	31	2	847	36
Growth Adj:	1.00	1.00	1.00	1.00	1.00	1.00	1.00	1.00	1.00	1.00	1.00	1.00
Initial Bse:	73	37	12	16	6	11	9	305	31	2	847	36
Added Vol:	0	0	0	0	0	0	0	0	0	0	0	0
PasserByVol:	0	0	0	0	0	0	0	0	0	0	0	0
Initial Fut:	73	37	12	16	6	11	9	305	31	2	847	36
User Adj:	1.00	1.00	1.00	1.00	1.00	1.00	1.00	1.00	1.00	1.00	1.00	1.00
PHF Adj:	1.00	1.00	1.00	1.00	1.00	1.00	1.00	1.00	1.00	1.00	1.00	1.00
PHF Volume:	73	37	12	16	6	11	9	305	31	2	847	36
Reduct Vol:	0	0	0	0	0	0	0	0	0	0	0	0
Reduced Vol:	73	37	12	16	6	11	9	305	31	2	847	36
PCE Adj:	1.00	1.00	1.00	1.00	1.00	1.00	1.00	1.00	1.00	1.00	1.00	1.00
MLF Adj:	1.00	1.00	1.00	1.00	1.00	1.00	1.00	1.00	1.00	1.00	1.00	1.00
FinalVolume:	73	37	12	16	6	11	9	305	31	2	847	36
Saturation Flow Module:												
Adjustment:	1.00	1.00	1.00	1.00	1.00	1.00	1.00	1.00	1.00	1.00	1.00	1.00
Lanes:	0.60	0.30	0.10	0.49	0.18	0.33	1.00	1.82	0.18	1.00	1.92	0.08
Final Sat.:	328	166	54	256	96	176	537	1071	110	605	1279	55
Capacity Analysis Module:												
Vol/Sat:	0.22	0.22	0.22	0.06	0.06	0.06	0.02	0.28	0.28	0.00	0.66	0.66
Crit Moves:		****				****		****			****	
Delay/Veh:	10.9	10.9	10.9	9.7	9.7	9.7	9.3	10.9	10.7	8.6	17.7	17.5
Delay Adj:	1.00	1.00	1.00	1.00	1.00	1.00	1.00	1.00	1.00	1.00	1.00	1.00
AdjDel/Veh:	10.9	10.9	10.9	9.7	9.7	9.7	9.3	10.9	10.7	8.6	17.7	17.5
LOS by Move:	B	B	B	A	A	A	A	B	B	A	C	C
ApproachDel:		10.9			9.7			10.8			17.7	
Delay Adj:		1.00			1.00			1.00			1.00	
ApprAdjDel:		10.9			9.7			10.8			17.7	
LOS by Appr:		B			A			B			C	
AllWayAvgQ:	0.3	0.3	0.3	0.1	0.1	0.1	0.0	0.4	0.4	0.0	1.8	1.8

Overlook Parkway Extension
Ex Open + Alt4A
AM Peak Hour

Note: Queue reported is the number of cars per lane.

Overlook Parkway Extension
Ex Open + Alt4A
AM Peak Hour

Level Of Service Computation Report
2000 HCM 4-Way Stop Method (Future Volume Alternative)

Intersection #25 Crystal View Ter/Berry Rd

Cycle (sec):	100	Critical Vol./Cap.(X):	0.156
Loss Time (sec):	0 (Y+R=4.0 sec)	Average Delay (sec/veh):	7.4
Optimal Cycle:	0	Level Of Service:	A

Street Name:	Crystal View Ter						Berry Rd					
Approach:	North Bound			South Bound			East Bound			West Bound		
Movement:	L	T	R	L	T	R	L	T	R	L	T	R
Control:	Stop Sign			Stop Sign			Stop Sign			Stop Sign		
Rights:	Include			Include			Include			Include		
Min. Green:	7	7	7	7	7	7	7	7	7	7	7	7
Lanes:	0 0	1! 0	0	0 1	0 0	0	0 0	0 0	1	0 0	1! 0	0
Volume Module:												
Base Vol:	1	70	77	20	32	0	0	0	3	28	0	17
Growth Adj:	1.00	1.00	1.00	1.00	1.00	1.00	1.00	1.00	1.00	1.00	1.00	1.00
Initial Bse:	1	70	77	20	32	0	0	0	3	28	0	17
Added Vol:	0	0	0	0	0	0	0	0	0	0	0	0
PasserByVol:	0	0	0	0	0	0	0	0	0	0	0	0
Initial Fut:	1	70	77	20	32	0	0	0	3	28	0	17
User Adj:	1.00	1.00	1.00	1.00	1.00	1.00	1.00	1.00	1.00	1.00	1.00	1.00
PHF Adj:	1.00	1.00	1.00	1.00	1.00	1.00	1.00	1.00	1.00	1.00	1.00	1.00
PHF Volume:	1	70	77	20	32	0	0	0	3	28	0	17
Reduct Vol:	0	0	0	0	0	0	0	0	0	0	0	0
Reduced Vol:	1	70	77	20	32	0	0	0	3	28	0	17
PCE Adj:	1.00	1.00	1.00	1.00	1.00	1.00	1.00	1.00	1.00	1.00	1.00	1.00
MLF Adj:	1.00	1.00	1.00	1.00	1.00	1.00	1.00	1.00	1.00	1.00	1.00	1.00
FinalVolume:	1	70	77	20	32	0	0	0	3	28	0	17
Saturation Flow Module:												
Adjustment:	1.00	1.00	1.00	1.00	1.00	1.00	1.00	1.00	1.00	1.00	1.00	1.00
Lanes:	0.01	0.47	0.52	0.38	0.62	0.00	0.00	0.00	1.00	0.62	0.00	0.38
Final Sat.:	6	449	494	324	518	0	0	0	915	513	0	311
Capacity Analysis Module:												
Vol/Sat:	0.16	0.16	0.16	0.06	0.06	xxxx	xxxx	xxxx	0.00	0.05	xxxx	0.05
Crit Moves:		****			****				****	****		
Delay/Veh:	7.4	7.4	7.4	7.5	7.5	0.0	0.0	0.0	6.7	7.4	0.0	7.4
Delay Adj:	1.00	1.00	1.00	1.00	1.00	1.00	1.00	1.00	1.00	1.00	1.00	1.00
AdjDel/Veh:	7.4	7.4	7.4	7.5	7.5	0.0	0.0	0.0	6.7	7.4	0.0	7.4
LOS by Move:	A	A	A	A	A	*	*	*	A	A	*	A
ApproachDel:		7.4			7.5			6.7			7.4	
Delay Adj:		1.00			1.00			1.00			1.00	
ApprAdjDel:		7.4			7.5			6.7			7.4	
LOS by Appr:		A			A			A			A	
AllWayAvgQ:	0.2	0.2	0.2	0.1	0.1	0.1	0.0	0.0	0.0	0.1	0.1	0.1

Overlook Parkway Extension
Ex Open + Alt4A
AM Peak Hour

Note: Queue reported is the number of cars per lane.

Overlook Parkway Extension
Ex Open + Alt4A
AM Peak Hour

Level Of Service Computation Report
2000 HCM 4-Way Stop Method (Future Volume Alternative)

Intersection #26 Corinthian Wy/Berry Rd

Cycle (sec):	100	Critical Vol./Cap.(X):	0.118
Loss Time (sec):	0 (Y+R=4.0 sec)	Average Delay (sec/veh):	7.4
Optimal Cycle:	0	Level Of Service:	A

Street Name:	Corinthian Wy									Berry Rd							
Approach:	North Bound				South Bound				East Bound				West Bound				
Movement:	L	-	T	-	R	L	-	T	-	R	L	-	T	-	R	L	-	T	-	R
Control:	Stop Sign					Stop Sign					Stop Sign					Stop Sign				
Rights:	Include					Include					Include					Include				
Min. Green:	7	7	7			7	7	7			7	7	7			7	7	7		
Lanes:	0	0	0	0	0	0	0	0	0	1	0	1	0	0	0	0	0	0	1	0
Volume Module:																				
Base Vol:	0	0	0			0	0	0			17	98	3			0	28	34		
Growth Adj:	1.00	1.00	1.00			1.00	1.00	1.00			1.00	1.00	1.00			1.00	1.00	1.00		
Initial Bse:	0	0	0			0	0	0			17	98	3			0	28	34		
Added Vol:	0	0	0			0	0	0			0	0	0			0	0	0		
PasserByVol:	0	0	0			0	0	0			0	0	0			0	0	0		
Initial Fut:	0	0	0			0	0	0			17	98	3			0	28	34		
User Adj:	1.00	1.00	1.00			1.00	1.00	1.00			1.00	1.00	1.00			1.00	1.00	1.00		
PHF Adj:	1.00	1.00	1.00			1.00	1.00	1.00			1.00	1.00	1.00			1.00	1.00	1.00		
PHF Volume:	0	0	0			0	0	0			17	98	3			0	28	34		
Reduct Vol:	0	0	0			0	0	0			0	0	0			0	0	0		
Reduced Vol:	0	0	0			0	0	0			17	98	3			0	28	34		
PCE Adj:	1.00	1.00	1.00			1.00	1.00	1.00			1.00	1.00	1.00			1.00	1.00	1.00		
MLF Adj:	1.00	1.00	1.00			1.00	1.00	1.00			1.00	1.00	1.00			1.00	1.00	1.00		
FinalVolume:	0	0	0			0	0	0			17	98	3			0	28	34		
Saturation Flow Module:																				
Adjustment:	1.00	1.00	1.00			1.00	1.00	1.00			1.00	1.00	1.00			1.00	1.00	1.00		
Lanes:	0.00	0.00	0.00			0.00	0.00	0.00			1.00	0.97	0.03			0.00	0.45	0.55		
Final Sat.:	0	0	0			0	0	0			956	832	25			0	436	529		
Capacity Analysis Module:																				
Vol/Sat:	xxxx	xxxx	xxxx			xxxx	xxxx	xxxx			0.02	0.12	0.12			xxxx	xxxx	0.06	0.06	
Crit Moves:											****	****						****		
Delay/Veh:	0.0	0.0	0.0			0.0	0.0	0.0			6.7	7.7	7.7			0.0	0.0	6.9	6.9	
Delay Adj:	1.00	1.00	1.00			1.00	1.00	1.00			1.00	1.00	1.00			1.00	1.00	1.00		
AdjDel/Veh:	0.0	0.0	0.0			0.0	0.0	0.0			6.7	7.7	7.7			0.0	0.0	6.9	6.9	
LOS by Move:	*	*	*			*	*	*			A	A	A			*	*	A	A	
ApproachDel:	xxxxxx					6.7					7.7					6.9				
Delay Adj:	xxxxx					1.00					1.00					1.00				
ApprAdjDel:	xxxxxx					6.7					7.7					6.9				
LOS by Appr:	*					A					A					A				
AllWayAvgQ:	0.0	0.0	0.0			0.0	0.0	0.0			0.0	0.1	0.1			0.1	0.1	0.1	0.1	

Overlook Parkway Extension
Ex Open + Alt4A
AM Peak Hour

Note: Queue reported is the number of cars per lane.

HCM Unsignalized Intersection Capacity Analysis
27: Madison St & Dufferin Ave

11/8/2011

Movement	EBL	EBR	SBL	SBR	NEL2	NEL	NET	SWT	SWR	SWR2
Lane Configurations										
Sign Control	Stop		Stop				Stop	Stop		
Volume (vph)	8	10	0	0	7	1	1	15	31	1
Peak Hour Factor	1.00	1.00	1.00	1.00	1.00	1.00	1.00	1.00	1.00	1.00
Hourly flow rate (vph)	8	10	0	0	7	1	1	15	31	1

Direction, Lane #	EB 1	SB 1	NE 1	SW 1
Volume Total (vph)	18	0	9	47
Volume Left (vph)	0	0	7	15
Volume Right (vph)	10	0	1	1
Hadj (s)	-0.32	0.00	0.11	0.07
Departure Headway (s)	3.6	4.0	4.1	4.0
Degree Utilization, x	0.02	0.00	0.01	0.05
Capacity (veh/h)	975	882	844	892
Control Delay (s)	6.7	7.0	7.2	7.2
Approach Delay (s)	6.7	0.0	7.2	7.2
Approach LOS	A	A	A	A

Intersection Summary				
Delay		7.1		
HCM Level of Service		A		
Intersection Capacity Utilization		16.9%	ICU Level of Service	A
Analysis Period (min)		15		

Overlook Parkway Extension
Ex Open + Alt4A
AM Peak Hour

Level Of Service Computation Report
2000 HCM Unsignalized Method (Future Volume Alternative)

Intersection #28 Orozco Dr/Overlook Pkwy

Average Delay (sec/veh): 0.7 Worst Case Level Of Service: D[25.3]

Street Name:	Orozco Dr						Overlook Pkwy					
Approach:	North Bound			South Bound			East Bound			West Bound		
Movement:	L - T - R			L - T - R			L - T - R			L - T - R		
Control:	Stop Sign			Stop Sign			Uncontrolled			Uncontrolled		
Rights:	Include			Include			Include			Include		
Lanes:	0 0 1! 0 0			0 0 1! 0 0			1 0 1 1 0			1 0 1 1 0		
Volume Module:												
Base Vol:	9	2	2	19	1	2	8	305	3	2	830	49
Growth Adj:	1.00	1.00	1.00	1.00	1.00	1.00	1.00	1.00	1.00	1.00	1.00	1.00
Initial Bse:	9	2	2	19	1	2	8	305	3	2	830	49
Added Vol:	0	0	0	0	0	0	0	0	0	0	0	0
PasserByVol:	0	0	0	0	0	0	0	0	0	0	0	0
Initial Fut:	9	2	2	19	1	2	8	305	3	2	830	49
User Adj:	1.00	1.00	1.00	1.00	1.00	1.00	1.00	1.00	1.00	1.00	1.00	1.00
PHF Adj:	1.00	1.00	1.00	1.00	1.00	1.00	1.00	1.00	1.00	1.00	1.00	1.00
PHF Volume:	9	2	2	19	1	2	8	305	3	2	830	49
Reduct Vol:	0	0	0	0	0	0	0	0	0	0	0	0
FinalVolume:	9	2	2	19	1	2	8	305	3	2	830	49
Critical Gap Module:												
Critical Gp:	7.5	6.5	6.9	7.5	6.5	6.9	4.1	xxxx	xxxxx	4.1	xxxx	xxxxx
FollowUpTim:	3.5	4.0	3.3	3.5	4.0	3.3	2.2	xxxx	xxxxx	2.2	xxxx	xxxxx
Capacity Module:												
Cnflict Vol:	742	1206	154	1028	1183	440	879	xxxx	xxxxx	308	xxxx	xxxxx
Potent Cap.:	308	185	871	191	191	571	777	xxxx	xxxxx	1264	xxxx	xxxxx
Move Cap.:	303	183	871	187	189	571	777	xxxx	xxxxx	1264	xxxx	xxxxx
Volume/Cap:	0.03	0.01	0.00	0.10	0.01	0.00	0.01	xxxx	xxxx	0.00	xxxx	xxxx
Level Of Service Module:												
2Way95thQ:	xxxx	xxxx	xxxxx	xxxx	xxxx	xxxxx	0.0	xxxx	xxxxx	0.0	xxxx	xxxxx
Control Del:	xxxxx	xxxx	xxxxx	xxxxx	xxxx	xxxxx	9.7	xxxx	xxxxx	7.9	xxxx	xxxxx
LOS by Move:	*	*	*	*	*	*	A	*	*	A	*	*
Movement:	LT -	LTR -	RT	LT -	LTR -	RT	LT -	LTR -	RT	LT -	LTR -	RT
Shared Cap.:	xxxx	303	xxxxx	xxxx	200	xxxxx	xxxx	xxxx	xxxxx	xxxx	xxxx	xxxxx
SharedQueue:	xxxxx	0.1	xxxxx	xxxxx	0.4	xxxxx	xxxxx	xxxx	xxxxx	xxxxx	xxxx	xxxxx
Shrd ConDel:	xxxxx	17.4	xxxxx	xxxxx	25.3	xxxxx	xxxxx	xxxx	xxxxx	xxxxx	xxxx	xxxxx
Shared LOS:	*	C	*	*	D	*	*	*	*	*	*	*
ApproachDel:	17.4			25.3			xxxxxx			xxxxxx		
ApproachLOS:	C			D			*			*		

Note: Queue reported is the number of cars per lane.

Overlook Parkway Extension
Ex Open + Alt4A
AM Peak Hour

Level Of Service Computation Report
2000 HCM 4-Way Stop Method (Future Volume Alternative)

Intersection #51 Madison St/Victoria Ave (North)

Cycle (sec): 100 Critical Vol./Cap.(X): 1.468
Loss Time (sec): 0 (Y+R=4.0 sec) Average Delay (sec/veh): 163.4
Optimal Cycle: 0 Level Of Service: F

Street Name:	Madison St						Victoria Ave (North)					
Approach:	North Bound			South Bound			East Bound			West Bound		
Movement:	L - T - R			L - T - R			L - T - R			L - T - R		
Control:	Stop Sign			Stop Sign			Stop Sign			Stop Sign		
Rights:	Include			Include			Include			Include		
Min. Green:	7	7	7	7	7	7	7	7	7	7	7	7
Lanes:	0 1 0 0 0			0 0 1 0 1			0 0 0 0 0			0 1 0 0 1		
Volume Module:												
Base Vol:	413	528	0	0	230	17	0	0	0	18	165	20
Growth Adj:	1.00	1.00	1.00	1.00	1.00	1.00	1.00	1.00	1.00	1.00	1.00	1.00
Initial Bse:	413	528	0	0	230	17	0	0	0	18	165	20
Added Vol:	0	0	0	0	0	0	0	0	0	0	0	0
PasserByVol:	0	0	0	0	0	0	0	0	0	0	0	0
Initial Fut:	413	528	0	0	230	17	0	0	0	18	165	20
User Adj:	1.00	1.00	1.00	1.00	1.00	1.00	1.00	1.00	1.00	1.00	1.00	1.00
PHF Adj:	1.00	1.00	1.00	1.00	1.00	1.00	1.00	1.00	1.00	1.00	1.00	1.00
PHF Volume:	413	528	0	0	230	17	0	0	0	18	165	20
Reduct Vol:	0	0	0	0	0	0	0	0	0	0	0	0
Reduced Vol:	413	528	0	0	230	17	0	0	0	18	165	20
PCE Adj:	1.00	1.00	1.00	1.00	1.00	1.00	1.00	1.00	1.00	1.00	1.00	1.00
MLF Adj:	1.00	1.00	1.00	1.00	1.00	1.00	1.00	1.00	1.00	1.00	1.00	1.00
FinalVolume:	413	528	0	0	230	17	0	0	0	18	165	20
Saturation Flow Module:												
Adjustment:	1.00	1.00	1.00	1.00	1.00	1.00	1.00	1.00	1.00	1.00	1.00	1.00
Lanes:	0.44	0.56	0.00	0.00	1.00	1.00	0.00	0.00	0.00	0.10	0.90	1.00
Final Sat.:	281	360	0	0	602	682	0	0	0	52	473	587
Capacity Analysis Module:												
Vol/Sat:	1.47	1.47	xxxx	xxxx	0.38	0.02	xxxx	xxxx	xxxx	0.35	0.35	0.03
Crit Moves:		****			****						****	
Delay/Veh:	235.7	236	0.0	0.0	12.1	8.0	0.0	0.0	0.0	12.9	12.9	8.9
Delay Adj:	1.00	1.00	1.00	1.00	1.00	1.00	1.00	1.00	1.00	1.00	1.00	1.00
AdjDel/Veh:	235.7	236	0.0	0.0	12.1	8.0	0.0	0.0	0.0	12.9	12.9	8.9
LOS by Move:	F	F	*	*	B	A	*	*	*	B	B	A
ApproachDel:	235.7				11.8		xxxxxx			12.5		
Delay Adj:	1.00				1.00		xxxxx			1.00		
ApprAdjDel:	235.7				11.8		xxxxxx			12.5		
LOS by Appr:	F				B		*			B		
AllWayAvgQ:	40.4	40.4	40.4	0.0	0.6	0.0	0.0	0.0	0.0	0.5	0.5	0.0

Overlook Parkway Extension
Ex Open + Alt4A
AM Peak Hour

Note: Queue reported is the number of cars per lane.

Overlook Parkway Extension
Ex Open + Alt4A
AM Peak Hour

Level Of Service Computation Report
2000 HCM 4-Way Stop Method (Future Volume Alternative)

Intersection #52 Madison St/Victoria Ave (South)

Cycle (sec): 100 | Critical Vol./Cap.(X): 1.467
Loss Time (sec): 0 (Y+R=4.0 sec) | Average Delay (sec/veh): 140.4
Optimal Cycle: 0 | Level Of Service: F

Street Name:	Madison St						Victoria Ave (South)					
Approach:	North Bound			South Bound			East Bound			West Bound		
Movement:	L -	T -	R	L -	T -	R	L -	T -	R	L -	T -	R
Control:	Stop Sign			Stop Sign			Stop Sign			Stop Sign		
Rights:	Include			Include			Include			Include		
Min. Green:	7	7	7	7	7	7	7	7	7	7	7	7
Lanes:	0 0	0 1	0	0 1	0 0	0	0 0	1! 0	0	0 0	0 0	0
Volume Module:												
Base Vol:	0	879	28	4	244	0	62	138	294	0	0	0
Growth Adj:	1.00	1.00	1.00	1.00	1.00	1.00	1.00	1.00	1.00	1.00	1.00	1.00
Initial Bse:	0	879	28	4	244	0	62	138	294	0	0	0
Added Vol:	0	0	0	0	0	0	0	0	0	0	0	0
PasserByVol:	0	0	0	0	0	0	0	0	0	0	0	0
Initial Fut:	0	879	28	4	244	0	62	138	294	0	0	0
User Adj:	1.00	1.00	1.00	1.00	1.00	1.00	1.00	1.00	1.00	1.00	1.00	1.00
PHF Adj:	1.00	1.00	1.00	1.00	1.00	1.00	1.00	1.00	1.00	1.00	1.00	1.00
PHF Volume:	0	879	28	4	244	0	62	138	294	0	0	0
Reduct Vol:	0	0	0	0	0	0	0	0	0	0	0	0
Reduced Vol:	0	879	28	4	244	0	62	138	294	0	0	0
PCE Adj:	1.00	1.00	1.00	1.00	1.00	1.00	1.00	1.00	1.00	1.00	1.00	1.00
MLF Adj:	1.00	1.00	1.00	1.00	1.00	1.00	1.00	1.00	1.00	1.00	1.00	1.00
FinalVolume:	0	879	28	4	244	0	62	138	294	0	0	0
Saturation Flow Module:												
Adjustment:	1.00	1.00	1.00	1.00	1.00	1.00	1.00	1.00	1.00	1.00	1.00	1.00
Lanes:	0.00	0.97	0.03	0.02	0.98	0.00	0.13	0.28	0.59	0.00	0.00	0.00
Final Sat.:	0	599	19	9	537	0	77	171	364	0	0	0
Capacity Analysis Module:												
Vol/Sat:	xxxx	1.47	1.47	0.45	0.45	xxxx	0.81	0.81	0.81	xxxx	xxxx	xxxx
Crit Moves:		****			****		****					
Delay/Veh:	0.0	236	236.0	14.4	14.4	0.0	28.2	28.2	28.2	0.0	0.0	0.0
Delay Adj:	1.00	1.00	1.00	1.00	1.00	1.00	1.00	1.00	1.00	1.00	1.00	1.00
AdjDel/Veh:	0.0	236	236.0	14.4	14.4	0.0	28.2	28.2	28.2	0.0	0.0	0.0
LOS by Move:	*	F	F	B	B	*	D	D	D	*	*	*
ApproachDel:	236.0			14.4			28.2			xxxxxx		
Delay Adj:	1.00			1.00			1.00			xxxxx		
ApprAdjDel:	236.0			14.4			28.2			xxxxxx		
LOS by Appr:	F			B			D			*		
AllWayAvgQ:	39.0	39.0	39.0	0.8	0.8	0.8	3.3	3.3	3.3	0.0	0.0	0.0

Overlook Parkway Extension
Ex Open + Alt4A
AM Peak Hour

Note: Queue reported is the number of cars per lane.

Overlook Parkway Extension
Ex Open + Alt4A
AM Peak Hour

Level Of Service Computation Report
2000 HCM 4-Way Stop Method (Future Volume Alternative)

Intersection #81 Washington St/Victoria Ave (North)

Cycle (sec): 100 | Critical Vol./Cap.(X): 0.360
Loss Time (sec): 0 (Y+R=4.0 sec) | Average Delay (sec/veh): 10.6
Optimal Cycle: 0 | Level Of Service: B

Street Name:	Washington St						Victoria Ave (North)					
Approach:	North Bound			South Bound			East Bound			West Bound		
Movement:	L - T - R			L - T - R			L - T - R			L - T - R		
Control:	Stop Sign			Stop Sign			Stop Sign			Stop Sign		
Rights:	Include			Include			Include			Include		
Min. Green:	7	7	7	7	7	7	7	7	7	7	7	7
Lanes:	0 1	1 0	0	0 0	0 1	0	0 0	0 0	0	1 0	0 1	0
Volume Module:												
Base Vol:	52	418	0	0	79	6	0	0	0	56	135	56
Growth Adj:	1.00	1.00	1.00	1.00	1.00	1.00	1.00	1.00	1.00	1.00	1.00	1.00
Initial Bse:	52	418	0	0	79	6	0	0	0	56	135	56
Added Vol:	0	0	0	0	0	0	0	0	0	0	0	0
PasserByVol:	0	0	0	0	0	0	0	0	0	0	0	0
Initial Fut:	52	418	0	0	79	6	0	0	0	56	135	56
User Adj:	1.00	1.00	1.00	1.00	1.00	1.00	1.00	1.00	1.00	1.00	1.00	1.00
PHF Adj:	1.00	1.00	1.00	1.00	1.00	1.00	1.00	1.00	1.00	1.00	1.00	1.00
PHF Volume:	52	418	0	0	79	6	0	0	0	56	135	56
Reduct Vol:	0	0	0	0	0	0	0	0	0	0	0	0
Reduced Vol:	52	418	0	0	79	6	0	0	0	56	135	56
PCE Adj:	1.00	1.00	1.00	1.00	1.00	1.00	1.00	1.00	1.00	1.00	1.00	1.00
MLF Adj:	1.00	1.00	1.00	1.00	1.00	1.00	1.00	1.00	1.00	1.00	1.00	1.00
FinalVolume:	52	418	0	0	79	6	0	0	0	56	135	56
Saturation Flow Module:												
Adjustment:	1.00	1.00	1.00	1.00	1.00	1.00	1.00	1.00	1.00	1.00	1.00	1.00
Lanes:	0.22	1.78	0.00	0.00	0.93	0.07	0.00	0.00	0.00	1.00	0.71	0.29
Final Sat.:	145	1175	0	0	572	43	0	0	0	546	435	180
Capacity Analysis Module:												
Vol/Sat:	0.36	0.36	xxxx	xxxx	0.14	0.14	xxxx	xxxx	xxxx	0.10	0.31	0.31
Crit Moves:	****				****							****
Delay/Veh:	11.0	10.9	0.0	0.0	9.5	9.5	0.0	0.0	0.0	9.7	10.6	10.6
Delay Adj:	1.00	1.00	1.00	1.00	1.00	1.00	1.00	1.00	1.00	1.00	1.00	1.00
AdjDel/Veh:	11.0	10.9	0.0	0.0	9.5	9.5	0.0	0.0	0.0	9.7	10.6	10.6
LOS by Move:	B	B	*	*	A	A	*	*	*	A	B	B
ApproachDel:	10.9				9.5		xxxxxx			10.4		
Delay Adj:	1.00				1.00		xxxxx			1.00		
ApprAdjDel:	10.9				9.5		xxxxxx			10.4		
LOS by Appr:	B				A		*			B		
AllWayAvgQ:	0.5	0.5	0.0	0.1	0.1	0.1	0.0	0.0	0.0	0.1	0.4	0.4

Overlook Parkway Extension
Ex Open + Alt4A
AM Peak Hour

Note: Queue reported is the number of cars per lane.

Overlook Parkway Extension
Ex Open + Alt4A
AM Peak Hour

Level Of Service Computation Report
2000 HCM 4-Way Stop Method (Future Volume Alternative)

Intersection #82 Washington St/Victoria Ave (South)

Cycle (sec):	100	Critical Vol./Cap.(X):	0.499
Loss Time (sec):	0 (Y+R=4.0 sec)	Average Delay (sec/veh):	10.5
Optimal Cycle:	0	Level Of Service:	B

Street Name:	Washington St						Victoria Ave (South)					
Approach:	North Bound			South Bound			East Bound			West Bound		
Movement:	L	- T	- R	L	- T	- R	L	- T	- R	L	- T	- R
Control:	Stop Sign			Stop Sign			Stop Sign			Stop Sign		
Rights:	Include			Include			Include			Include		
Min. Green:	7	7	7	7	7	7	7	7	7	7	7	7
Lanes:	0 0	2 0	1	0 1	0 0	0	0 1	0 0	1	0 0	0 0	0
Volume Module:												
Base Vol:	0	465	411	33	102	0	5	111	6	0	0	0
Growth Adj:	1.00	1.00	1.00	1.00	1.00	1.00	1.00	1.00	1.00	1.00	1.00	1.00
Initial Bse:	0	465	411	33	102	0	5	111	6	0	0	0
Added Vol:	0	0	0	0	0	0	0	0	0	0	0	0
PasserByVol:	0	0	0	0	0	0	0	0	0	0	0	0
Initial Fut:	0	465	411	33	102	0	5	111	6	0	0	0
User Adj:	1.00	1.00	1.00	1.00	1.00	1.00	1.00	1.00	1.00	1.00	1.00	1.00
PHF Adj:	1.00	1.00	1.00	1.00	1.00	1.00	1.00	1.00	1.00	1.00	1.00	1.00
PHF Volume:	0	465	411	33	102	0	5	111	6	0	0	0
Reduct Vol:	0	0	0	0	0	0	0	0	0	0	0	0
Reduced Vol:	0	465	411	33	102	0	5	111	6	0	0	0
PCE Adj:	1.00	1.00	1.00	1.00	1.00	1.00	1.00	1.00	1.00	1.00	1.00	1.00
MLF Adj:	1.00	1.00	1.00	1.00	1.00	1.00	1.00	1.00	1.00	1.00	1.00	1.00
FinalVolume:	0	465	411	33	102	0	5	111	6	0	0	0
Saturation Flow Module:												
Adjustment:	1.00	1.00	1.00	1.00	1.00	1.00	1.00	1.00	1.00	1.00	1.00	1.00
Lanes:	0.00	2.00	1.00	0.24	0.76	0.00	0.04	0.96	1.00	0.00	0.00	0.00
Final Sat.:	0	1420	824	154	477	0	23	506	589	0	0	0
Capacity Analysis Module:												
Vol/Sat:	xxxx	0.33	0.50	0.21	0.21	xxxx	0.22	0.22	0.01	xxxx	xxxx	xxxx
Crit Moves:			****		****			****				
Delay/Veh:	0.0	10.1	11.2	10.1	10.1	0.0	10.7	10.7	8.4	0.0	0.0	0.0
Delay Adj:	1.00	1.00	1.00	1.00	1.00	1.00	1.00	1.00	1.00	1.00	1.00	1.00
AdjDel/Veh:	0.0	10.1	11.2	10.1	10.1	0.0	10.7	10.7	8.4	0.0	0.0	0.0
LOS by Move:	*	B	B	B	B	*	B	B	A	*	*	*
ApproachDel:		10.6			10.1			10.6			xxxxxx	
Delay Adj:		1.00			1.00			1.00			xxxxx	
ApprAdjDel:		10.6			10.1			10.6			xxxxxx	
LOS by Appr:		B			B			B			*	
AllWayAvgQ:	0.0	0.5	0.9	0.3	0.3	0.3	0.2	0.2	0.0	0.0	0.0	0.0

Overlook Parkway Extension
Ex Open + Alt4A
AM Peak Hour

Note: Queue reported is the number of cars per lane.

Overlook Parkway Extension
Ex Open + Alt4A
AM Peak Hour

Level Of Service Computation Report
2000 HCM 4-Way Stop Method (Future Volume Alternative)

Intersection #221 Mary St/Victoria Ave (North)

Cycle (sec):	100	Critical Vol./Cap.(X):	0.597
Loss Time (sec):	0 (Y+R=4.0 sec)	Average Delay (sec/veh):	12.7
Optimal Cycle:	0	Level Of Service:	B

Street Name:	Mary St						Victoria Ave (North)					
Approach:	North Bound			South Bound			East Bound			West Bound		
Movement:	L - T - R			L - T - R			L - T - R			L - T - R		
Control:	Stop Sign			Stop Sign			Stop Sign			Stop Sign		
Rights:	Include			Include			Include			Include		
Min. Green:	7	7	7	7	7	7	7	7	7	7	7	7
Lanes:	0 1	0	0 0	0	0 0	1 0	0 0	0	0 0	0	0 1!	0 0
Volume Module:												
Base Vol:	15	415	0	0	83	45	0	0	0	34	176	98
Growth Adj:	1.00	1.00	1.00	1.00	1.00	1.00	1.00	1.00	1.00	1.00	1.00	1.00
Initial Bse:	15	415	0	0	83	45	0	0	0	34	176	98
Added Vol:	0	0	0	0	0	0	0	0	0	0	0	0
PasserByVol:	0	0	0	0	0	0	0	0	0	0	0	0
Initial Fut:	15	415	0	0	83	45	0	0	0	34	176	98
User Adj:	1.00	1.00	1.00	1.00	1.00	1.00	1.00	1.00	1.00	1.00	1.00	1.00
PHF Adj:	1.00	1.00	1.00	1.00	1.00	1.00	1.00	1.00	1.00	1.00	1.00	1.00
PHF Volume:	15	415	0	0	83	45	0	0	0	34	176	98
Reduct Vol:	0	0	0	0	0	0	0	0	0	0	0	0
Reduced Vol:	15	415	0	0	83	45	0	0	0	34	176	98
PCE Adj:	1.00	1.00	1.00	1.00	1.00	1.00	1.00	1.00	1.00	1.00	1.00	1.00
MLF Adj:	1.00	1.00	1.00	1.00	1.00	1.00	1.00	1.00	1.00	1.00	1.00	1.00
FinalVolume:	15	415	0	0	83	45	0	0	0	34	176	98
Saturation Flow Module:												
Adjustment:	1.00	1.00	1.00	1.00	1.00	1.00	1.00	1.00	1.00	1.00	1.00	1.00
Lanes:	0.03	0.97	0.00	0.00	0.65	0.35	0.00	0.00	0.00	0.11	0.57	0.32
Final Sat.:	25	695	0	0	437	237	0	0	0	75	388	216
Capacity Analysis Module:												
Vol/Sat:	0.60	0.60	xxxx	xxxx	0.19	0.19	xxxx	xxxx	xxxx	0.45	0.45	0.45
Crit Moves:	****				****						****	
Delay/Veh:	14.4	14.4	0.0	0.0	9.1	9.1	0.0	0.0	0.0	11.8	11.8	11.8
Delay Adj:	1.00	1.00	1.00	1.00	1.00	1.00	1.00	1.00	1.00	1.00	1.00	1.00
AdjDel/Veh:	14.4	14.4	0.0	0.0	9.1	9.1	0.0	0.0	0.0	11.8	11.8	11.8
LOS by Move:	B	B	*	*	A	A	*	*	*	B	B	B
ApproachDel:	14.4			9.1			xxxxxx			11.8		
Delay Adj:	1.00			1.00			xxxxx			1.00		
ApprAdjDel:	14.4			9.1			xxxxxx			11.8		
LOS by Appr:	B			A			*			B		
AllWayAvgQ:	1.3	1.3	1.3	0.2	0.2	0.2	0.0	0.0	0.0	0.7	0.7	0.7

Overlook Parkway Extension
Ex Open + Alt4A
AM Peak Hour

Note: Queue reported is the number of cars per lane.

Overlook Parkway Extension
Ex Open + Alt4A
AM Peak Hour

Level Of Service Computation Report
2000 HCM 4-Way Stop Method (Future Volume Alternative)

Intersection #222 Mary St/Victoria Ave (South)

Cycle (sec): 100 | Critical Vol./Cap.(X): 0.485
Loss Time (sec): 0 (Y+R=4.0 sec) | Average Delay (sec/veh): 11.6
Optimal Cycle: 0 | Level Of Service: B

Street Name:	Mary St						Victoria Ave (South)					
Approach:	North Bound			South Bound			East Bound			West Bound		
Movement:	L -	T -	R	L -	T -	R	L -	T -	R	L -	T -	R
Control:	Stop Sign			Stop Sign			Stop Sign			Stop Sign		
Rights:	Include			Include			Include			Include		
Min. Green:	7	7	7	7	7	7	7	7	7	7	7	7
Lanes:	0 0	0 1	0	0 1	0 0	0	1 0	0 1	0	0 0	0 0	0
Volume Module:												
Base Vol:	0	137	92	40	77	0	293	222	16	0	0	0
Growth Adj:	1.00	1.00	1.00	1.00	1.00	1.00	1.00	1.00	1.00	1.00	1.00	1.00
Initial Bse:	0	137	92	40	77	0	293	222	16	0	0	0
Added Vol:	0	0	0	0	0	0	0	0	0	0	0	0
PasserByVol:	0	0	0	0	0	0	0	0	0	0	0	0
Initial Fut:	0	137	92	40	77	0	293	222	16	0	0	0
User Adj:	1.00	1.00	1.00	1.00	1.00	1.00	1.00	1.00	1.00	1.00	1.00	1.00
PHF Adj:	1.00	1.00	1.00	1.00	1.00	1.00	1.00	1.00	1.00	1.00	1.00	1.00
PHF Volume:	0	137	92	40	77	0	293	222	16	0	0	0
Reduct Vol:	0	0	0	0	0	0	0	0	0	0	0	0
Reduced Vol:	0	137	92	40	77	0	293	222	16	0	0	0
PCE Adj:	1.00	1.00	1.00	1.00	1.00	1.00	1.00	1.00	1.00	1.00	1.00	1.00
MLF Adj:	1.00	1.00	1.00	1.00	1.00	1.00	1.00	1.00	1.00	1.00	1.00	1.00
FinalVolume:	0	137	92	40	77	0	293	222	16	0	0	0
Saturation Flow Module:												
Adjustment:	1.00	1.00	1.00	1.00	1.00	1.00	1.00	1.00	1.00	1.00	1.00	1.00
Lanes:	0.00	0.60	0.40	0.34	0.66	0.00	1.00	0.93	0.07	0.00	0.00	0.00
Final Sat.:	0	409	275	213	409	0	604	620	45	0	0	0
Capacity Analysis Module:												
Vol/Sat:	xxxx	0.34	0.34	0.19	0.19	xxxx	0.49	0.36	0.36	xxxx	xxxx	xxxx
Crit Moves:		****			****		****					
Delay/Veh:	0.0	10.4	10.4	9.7	9.7	0.0	13.8	10.9	10.9	0.0	0.0	0.0
Delay Adj:	1.00	1.00	1.00	1.00	1.00	1.00	1.00	1.00	1.00	1.00	1.00	1.00
AdjDel/Veh:	0.0	10.4	10.4	9.7	9.7	0.0	13.8	10.9	10.9	0.0	0.0	0.0
LOS by Move:	*	B	B	A	A	*	B	B	B	*	*	*
ApproachDel:		10.4			9.7			12.5			xxxxxx	
Delay Adj:		1.00			1.00			1.00			xxxxx	
ApprAdjDel:		10.4			9.7			12.5			xxxxxx	
LOS by Appr:		B			A			B			*	
AllWayAvgQ:	0.5	0.5	0.5	0.2	0.2	0.2	0.9	0.5	0.5	0.0	0.0	0.0

Overlook Parkway Extension
Ex Open + Alt4A
AM Peak Hour

Note: Queue reported is the number of cars per lane.

Overlook Parkway Extension
Ex Open + Alt4A
PM Peak Hour

Scenario Report

Scenario:	Ex Open + Alt4A PM
Command:	Ex Open + Alt4A PM
Volume:	Ex Open + Alt4A PM
Geometry:	Ex + Alt4A
Impact Fee:	Default Impact Fee
Trip Generation:	none
Trip Distribution:	none
Paths:	Default Path
Routes:	Default Route
Configuration:	Ex Open + Alt4A PM

Overlook Parkway Extension
Ex Open + Alt4A
PM Peak Hour

Impact Analysis Report
Level Of Service

Intersection	Base LOS	Base Del/ Veh	Base V/ C	Future LOS	Future Del/ Veh	Future V/ C	Change in
# 1 Madison St/SR-91 WB Ramps	C	29.0	0.623	C	29.0	0.623	+ 0.000 D/V
# 2 Madison St/SR-91 EB Ramps	C	25.6	0.554	C	25.6	0.554	+ 0.000 D/V
# 3 Madison St/Indiana Ave	D	37.8	0.743	D	37.8	0.743	+ 0.000 D/V
# 4 Madison St/Lincoln Ave	C	27.9	0.532	C	27.9	0.532	+ 0.000 D/V
# 6 Washington St/Indiana Ave	C	24.1	0.408	C	24.1	0.408	+ 0.000 D/V
# 7 Washington St/Lincoln Ave	B	12.3	0.480	B	12.3	0.480	+ 0.000 V/C
# 9 Washington St/Overlook Pkwy	B	16.7	0.723	B	16.7	0.723	+ 0.000 D/V
# 10 Riverside Ave-SR-91 WB/Arlingt	C	30.5	0.738	C	30.5	0.738	+ 0.000 D/V
# 11 Indiana Ave-SR-91 EB/Arlington	C	27.1	0.643	C	27.1	0.643	+ 0.000 D/V
# 12 Victoria Ave/Arlington Ave	C	29.9	0.705	C	29.9	0.705	+ 0.000 D/V
# 13 Alessandro Blvd/Arlington Ave	D	36.8	0.824	D	36.8	0.824	+ 0.000 D/V
# 14 Alessandro Blvd/Overlook Pkwy	F	249.4	1.652	F	249.4	1.652	+ 0.000 D/V
# 15 Alessandro Blvd/Trautwein Rd	C	20.3	0.708	C	20.3	0.708	+ 0.000 D/V
# 16 Crystal View Ter/Overlook Pkwy	C	22.8	0.799	C	22.8	0.799	+ 0.000 V/C
# 17 Kingdom Dr/Overlook Pkwy	E	36.3	0.000	E	36.3	0.000	+ 0.000 D/V
# 18 Kingdom Dr/Green Orchard Pl	A	9.0	0.000	A	9.0	0.000	+ 0.000 D/V
# 19 Trautwein Rd/John F. Kennedy D	B	18.1	0.590	B	18.1	0.590	+ 0.000 D/V
# 20 Washington St/Bradley St	C	21.4	0.594	C	21.4	0.594	+ 0.000 D/V
# 21 Alessandro Blvd/Via Vista Dr	B	17.4	0.713	B	17.4	0.713	+ 0.000 D/V
# 23 Mary St/Hawarden Dr	A	7.3	0.132	A	7.3	0.132	+ 0.000 V/C
# 24 Hawarden Dr/Overlook Pkwy	C	18.5	0.717	C	18.5	0.717	+ 0.000 V/C
# 25 Crystal View Ter/Berry Rd	A	7.4	0.120	A	7.4	0.120	+ 0.000 V/C
# 26 Corinthian Wy/Berry Rd	A	7.2	0.077	A	7.2	0.077	+ 0.000 V/C

Traffix 7.9.0415 (c) 2007 Dowling Assoc. Licensed to MMA, LONG BEACH, CA

Overlook Parkway Extension
Ex Open + Alt4A
PM Peak Hour

Intersection	Base LOS	Base Del/ Veh	Base V/ C	Future LOS	Future Del/ Veh	Future V/ C	Change in
# 28 Orozco Dr/Overlook Pkwy	E	42.5	0.000	E	42.5	0.000	+ 0.000 D/V
# 51 Madison St/Victoria Ave (North	F	97.6	1.280	F	97.6	1.280	+ 0.000 V/C
# 52 Madison St/Victoria Ave (South	F	172.7	1.547	F	172.7	1.547	+ 0.000 V/C
# 81 Washington St/Victoria Ave (No	B	14.5	0.624	B	14.5	0.624	+ 0.000 V/C
# 82 Washington St/Victoria Ave (So	D	28.4	0.949	D	28.4	0.949	+ 0.000 V/C
#221 Mary St/Victoria Ave (North)	B	13.2	0.592	B	13.2	0.592	+ 0.000 V/C
#222 Mary St/Victoria Ave (South)	A	9.9	0.375	A	9.9	0.375	+ 0.000 V/C

Traffix 7.9.0415 (c) 2007 Dowling Assoc. Licensed to MMA, LONG BEACH, CA

Overlook Parkway Extension
Ex Open + Alt4A
PM Peak Hour

Level Of Service Computation Report
2000 HCM Operations Method (Future Volume Alternative)

Intersection #1 Madison St/SR-91 WB Ramps

Cycle (sec):	100	Critical Vol./Cap.(X):	0.623
Loss Time (sec):	12 (Y+R=4.0 sec)	Average Delay (sec/veh):	29.0
Optimal Cycle:	50	Level Of Service:	C

Street Name:	Madison St								SR-91 WB Ramps					
Approach:	North Bound			South Bound			East Bound			West Bound				
Movement:	L	T	R	L	T	R	L	T	R	L	T	R		
Control:	Protected			Protected			Split Phase			Split Phase				
Rights:	Include			Include			Include			Include				
Min. Green:	7	7	7	7	7	7	7	7	7	7	7	7		
Lanes:	1 0	2 0	0	0 0	3 0	1	0 0	0 0	0	0 1	0 0	1		
Volume Module:														
Base Vol:	452	607	0	0	666	233	0	0	0	261	2	127		
Growth Adj:	1.00	1.00	1.00	1.00	1.00	1.00	1.00	1.00	1.00	1.00	1.00	1.00		
Initial Bse:	452	607	0	0	666	233	0	0	0	261	2	127		
Added Vol:	0	0	0	0	0	0	0	0	0	0	0	0		
PasserByVol:	0	0	0	0	0	0	0	0	0	0	0	0		
Initial Fut:	452	607	0	0	666	233	0	0	0	261	2	127		
User Adj:	1.00	1.00	1.00	1.00	1.00	1.00	1.00	1.00	1.00	1.00	1.00	1.00		
PHF Adj:	1.00	1.00	1.00	1.00	1.00	1.00	1.00	1.00	1.00	1.00	1.00	1.00		
PHF Volume:	452	607	0	0	666	233	0	0	0	261	2	127		
Reduct Vol:	0	0	0	0	0	0	0	0	0	0	0	0		
Reduced Vol:	452	607	0	0	666	233	0	0	0	261	2	127		
PCE Adj:	1.00	1.00	1.00	1.00	1.00	1.00	1.00	1.00	1.00	1.00	1.00	1.00		
MLF Adj:	1.00	1.00	1.00	1.00	1.00	1.00	1.00	1.00	1.00	1.00	1.00	1.00		
FinalVolume:	452	607	0	0	666	233	0	0	0	261	2	127		
Saturation Flow Module:														
Sat/Lane:	1900	1900	1900	1900	1900	1900	1900	1900	1900	1900	1900	1900		
Adjustment:	0.95	0.95	1.00	1.00	0.91	0.85	1.00	1.00	1.00	0.90	0.90	0.85		
Lanes:	1.00	2.00	0.00	0.00	3.00	1.00	0.00	0.00	0.00	0.99	0.01	1.00		
Final Sat.:	1805	3610	0	0	5187	1615	0	0	0	1697	13	1615		
Capacity Analysis Module:														
Vol/Sat:	0.25	0.17	0.00	0.00	0.13	0.14	0.00	0.00	0.00	0.15	0.15	0.08		
Crit Moves:	****					****					****			
Green/Cycle:	0.40	0.45	0.00	0.00	0.23	0.23	0.00	0.00	0.00	0.25	0.25	0.25		
Volume/Cap:	0.62	0.38	0.00	0.00	0.55	0.62	0.00	0.00	0.00	0.62	0.62	0.32		
Delay/Veh:	25.6	18.5	0.0	0.0	34.5	37.8	0.0	0.0	0.0	36.4	36.4	31.3		
User DelAdj:	1.00	1.00	1.00	1.00	1.00	1.00	1.00	1.00	1.00	1.00	1.00	1.00		
AdjDel/Veh:	25.6	18.5	0.0	0.0	34.5	37.8	0.0	0.0	0.0	36.4	36.4	31.3		
LOS by Move:	C	B	A	A	C	D	A	A	A	D	D	C		
HCM2kAvgQ:	12	6	0	0	7	7	0	0	0	8	8	3		

Note: Queue reported is the number of cars per lane.

Traffix 7.9.0415 (c) 2007 Dowling Assoc. Licensed to MMA, LONG BEACH, CA

Overlook Parkway Extension
Ex Open + Alt4A
PM Peak Hour

Level Of Service Computation Report
2000 HCM Operations Method (Future Volume Alternative)

Intersection #2 Madison St/SR-91 EB Ramps

Cycle (sec):	100	Critical Vol./Cap.(X):	0.554
Loss Time (sec):	12 (Y+R=4.0 sec)	Average Delay (sec/veh):	25.6
Optimal Cycle:	50	Level Of Service:	C

Street Name:	Madison St								SR-91 EB Ramps					
Approach:	North Bound			South Bound			East Bound			West Bound				
Movement:	L	T	R	L	T	R	L	T	R	L	T	R		
Control:	Protected			Protected			Protected			Protected				
Rights:	Include			Include			Include			Include				
Min. Green:	7	7	7	7	7	7	7	7	7	7	7	7		
Lanes:	0 0	3 0	1	1 0	2 0	0	0 1	0 0	1	0 0	0 0	0		
Volume Module:														
Base Vol:	0	854	339	174	788	0	196	3	292	0	0	0		
Growth Adj:	1.00	1.00	1.00	1.00	1.00	1.00	1.00	1.00	1.00	1.00	1.00	1.00		
Initial Bse:	0	854	339	174	788	0	196	3	292	0	0	0		
Added Vol:	0	0	0	0	0	0	0	0	0	0	0	0		
PasserByVol:	0	0	0	0	0	0	0	0	0	0	0	0		
Initial Fut:	0	854	339	174	788	0	196	3	292	0	0	0		
User Adj:	1.00	1.00	1.00	1.00	1.00	1.00	1.00	1.00	1.00	1.00	1.00	1.00		
PHF Adj:	1.00	1.00	1.00	1.00	1.00	1.00	1.00	1.00	1.00	1.00	1.00	1.00		
PHF Volume:	0	854	339	174	788	0	196	3	292	0	0	0		
Reduct Vol:	0	0	0	0	0	0	0	0	0	0	0	0		
Reduced Vol:	0	854	339	174	788	0	196	3	292	0	0	0		
PCE Adj:	1.00	1.00	1.00	1.00	1.00	1.00	1.00	1.00	1.00	1.00	1.00	1.00		
MLF Adj:	1.00	1.00	1.00	1.00	1.00	1.00	1.00	1.00	1.00	1.00	1.00	1.00		
FinalVolume:	0	854	339	174	788	0	196	3	292	0	0	0		
Saturation Flow Module:														
Sat/Lane:	1900	1900	1900	1900	1900	1900	1900	1900	1900	1900	1900	1900		
Adjustment:	1.00	0.91	0.85	0.95	0.95	1.00	0.94	0.94	0.85	1.00	1.00	1.00		
Lanes:	0.00	3.00	1.00	1.00	2.00	0.00	0.98	0.02	1.00	0.00	0.00	0.00		
Final Sat.:	0	5187	1615	1805	3610	0	1759	27	1615	0	0	0		
Capacity Analysis Module:														
Vol/Sat:	0.00	0.16	0.21	0.10	0.22	0.00	0.11	0.11	0.18	0.00	0.00	0.00		
Crit Moves:			****	****					****					
Green/Cycle:	0.00	0.38	0.38	0.17	0.42	0.00	0.24	0.33	0.33	0.00	0.00	0.00		
Volume/Cap:	0.00	0.43	0.55	0.55	0.52	0.00	0.46	0.34	0.55	0.00	0.00	0.00		
Delay/Veh:	0.0	23.2	25.5	39.9	21.9	0.0	33.0	25.9	29.0	0.0	0.0	0.0		
User DelAdj:	1.00	1.00	1.00	1.00	1.00	1.00	1.00	1.00	1.00	1.00	1.00	1.00		
AdjDel/Veh:	0.0	23.2	25.5	39.9	21.9	0.0	33.0	25.9	29.0	0.0	0.0	0.0		
LOS by Move:	A	C	C	D	C	A	C	C	C	A	A	A		
HCM2kAvgQ:	0	7	9	6	10	0	6	5	8	0	0	0		

Note: Queue reported is the number of cars per lane.

Traffix 7.9.0415 (c) 2007 Dowling Assoc. Licensed to MMA, LONG BEACH, CA

Overlook Parkway Extension
Ex Open + Alt4A
PM Peak Hour

Level Of Service Computation Report
2000 HCM Operations Method (Future Volume Alternative)

Intersection #3 Madison St/Indiana Ave

Cycle (sec): 100 | Critical Vol./Cap.(X): 0.743
Loss Time (sec): 16 (Y+R=4.0 sec) | Average Delay (sec/veh): 37.8
Optimal Cycle: 76 | Level Of Service: D

Street Name:	Madison St						Indiana Ave					
Approach:	North Bound			South Bound			East Bound			West Bound		
Movement:	L - T - R			L - T - R			L - T - R			L - T - R		
Control:	Protected			Protected			Protected			Protected		
Rights:	Include			Include			Include			Include		
Min. Green:	7	7	7	7	7	7	7	7	7	7	7	7
Lanes:	1 0	1 1	0	1 0	1 1	0	1 0	1 1	0	1 0	1 1	0
Volume Module:												
Base Vol:	82	636	32	205	728	118	251	332	94	42	242	330
Growth Adj:	1.00	1.00	1.00	1.00	1.00	1.00	1.00	1.00	1.00	1.00	1.00	1.00
Initial Bse:	82	636	32	205	728	118	251	332	94	42	242	330
Added Vol:	0	0	0	0	0	0	0	0	0	0	0	0
PasserByVol:	0	0	0	0	0	0	0	0	0	0	0	0
Initial Fut:	82	636	32	205	728	118	251	332	94	42	242	330
User Adj:	1.00	1.00	1.00	1.00	1.00	1.00	1.00	1.00	1.00	1.00	1.00	1.00
PHF Adj:	1.00	1.00	1.00	1.00	1.00	1.00	1.00	1.00	1.00	1.00	1.00	1.00
PHF Volume:	82	636	32	205	728	118	251	332	94	42	242	330
Reduct Vol:	0	0	0	0	0	0	0	0	0	0	0	0
Reduced Vol:	82	636	32	205	728	118	251	332	94	42	242	330
PCE Adj:	1.00	1.00	1.00	1.00	1.00	1.00	1.00	1.00	1.00	1.00	1.00	1.00
MLF Adj:	1.00	1.00	1.00	1.00	1.00	1.00	1.00	1.00	1.00	1.00	1.00	1.00
FinalVolume:	82	636	32	205	728	118	251	332	94	42	242	330
Saturation Flow Module:												
Sat/Lane:	1900	1900	1900	1900	1900	1900	1900	1900	1900	1900	1900	1900
Adjustment:	0.95	0.94	0.94	0.95	0.93	0.93	0.95	0.92	0.92	0.95	0.87	0.87
Lanes:	1.00	1.90	0.10	1.00	1.72	0.28	1.00	1.56	0.44	1.00	1.00	1.00
Final Sat.:	1805	3413	172	1805	3041	493	1805	2721	770	1805	1648	1648
Capacity Analysis Module:												
Vol/Sat:	0.05	0.19	0.19	0.11	0.24	0.24	0.14	0.12	0.12	0.02	0.15	0.20
Crit Moves:	****				****		****					****
Green/Cycle:	0.07	0.24	0.24	0.15	0.32	0.32	0.19	0.29	0.29	0.16	0.27	0.27
Volume/Cap:	0.65	0.77	0.77	0.77	0.75	0.75	0.75	0.43	0.43	0.14	0.55	0.75
Delay/Veh:	56.6	39.7	39.7	54.1	33.4	33.4	47.8	29.3	29.3	35.9	32.2	37.9
User DelAdj:	1.00	1.00	1.00	1.00	1.00	1.00	1.00	1.00	1.00	1.00	1.00	1.00
AdjDel/Veh:	56.6	39.7	39.7	54.1	33.4	33.4	47.8	29.3	29.3	35.9	32.2	37.9
LOS by Move:	E	D	D	D	C	C	D	C	C	D	C	D
HCM2kAvgQ:	4	12	12	8	14	14	9	6	6	1	7	11

Note: Queue reported is the number of cars per lane.

Traffix 7.9.0415 (c) 2007 Dowling Assoc. Licensed to MMA, LONG BEACH, CA

Overlook Parkway Extension
Ex Open + Alt4A
PM Peak Hour

Level Of Service Computation Report
2000 HCM Operations Method (Future Volume Alternative)

Intersection #4 Madison St/Lincoln Ave

Cycle (sec): 100 | Critical Vol./Cap.(X): 0.532
Loss Time (sec): 16 (Y+R=4.0 sec) | Average Delay (sec/veh): 27.9
Optimal Cycle: 51 | Level Of Service: C

Street Name:	Madison St						Lincoln Ave					
Approach:	North Bound			South Bound			East Bound			West Bound		
Movement:	L - T - R			L - T - R			L - T - R			L - T - R		
Control:	Protected			Protected			Protected			Protected		
Rights:	Include			Include			Include			Include		
Min. Green:	7	7	7	7	7	7	7	7	7	7	7	7
Lanes:	1 0	0 1	0	1 0	0 1	0	1 0	0 1	0	1 0	1 1	0
Volume Module:												
Base Vol:	20	383	13	65	521	41	98	188	47	17	93	77
Growth Adj:	1.00	1.00	1.00	1.00	1.00	1.00	1.00	1.00	1.00	1.00	1.00	1.00
Initial Bse:	20	383	13	65	521	41	98	188	47	17	93	77
Added Vol:	0	0	0	0	0	0	0	0	0	0	0	0
PasserByVol:	0	0	0	0	0	0	0	0	0	0	0	0
Initial Fut:	20	383	13	65	521	41	98	188	47	17	93	77
User Adj:	1.00	1.00	1.00	1.00	1.00	1.00	1.00	1.00	1.00	1.00	1.00	1.00
PHF Adj:	1.00	1.00	1.00	1.00	1.00	1.00	1.00	1.00	1.00	1.00	1.00	1.00
PHF Volume:	20	383	13	65	521	41	98	188	47	17	93	77
Reduct Vol:	0	0	0	0	0	0	0	0	0	0	0	0
Reduced Vol:	20	383	13	65	521	41	98	188	47	17	93	77
PCE Adj:	1.00	1.00	1.00	1.00	1.00	1.00	1.00	1.00	1.00	1.00	1.00	1.00
MLF Adj:	1.00	1.00	1.00	1.00	1.00	1.00	1.00	1.00	1.00	1.00	1.00	1.00
FinalVolume:	20	383	13	65	521	41	98	188	47	17	93	77
Saturation Flow Module:												
Sat/Lane:	1900	1900	1900	1900	1900	1900	1900	1900	1900	1900	1900	1900
Adjustment:	0.95	1.00	1.00	0.95	0.99	0.99	0.95	0.97	0.97	0.95	0.89	0.89
Lanes:	1.00	0.97	0.03	1.00	0.93	0.07	1.00	0.80	0.20	1.00	1.09	0.91
Final Sat.:	1805	1828	62	1805	1742	137	1805	1474	369	1805	1841	1524
Capacity Analysis Module:												
Vol/Sat:	0.01	0.21	0.21	0.04	0.30	0.30	0.05	0.13	0.13	0.01	0.05	0.05
Crit Moves:	****				****			****		****		
Green/Cycle:	0.07	0.42	0.42	0.14	0.49	0.49	0.14	0.21	0.21	0.07	0.14	0.14
Volume/Cap:	0.16	0.50	0.50	0.26	0.61	0.61	0.39	0.61	0.61	0.13	0.36	0.36
Delay/Veh:	44.3	21.7	21.7	38.9	19.7	19.7	40.1	38.7	38.7	44.1	39.5	39.5
User DelAdj:	1.00	1.00	1.00	1.00	1.00	1.00	1.00	1.00	1.00	1.00	1.00	1.00
AdjDel/Veh:	44.3	21.7	21.7	38.9	19.7	19.7	40.1	38.7	38.7	44.1	39.5	39.5
LOS by Move:	D	C	C	D	B	B	D	D	D	D	D	D
HCM2kAvgQ:	1	9	9	2	13	13	3	7	7	1	3	3

Note: Queue reported is the number of cars per lane.

Traffix 7.9.0415 (c) 2007 Dowling Assoc. Licensed to MMA, LONG BEACH, CA

Overlook Parkway Extension
Ex Open + Alt4A
PM Peak Hour

Level Of Service Computation Report
2000 HCM Operations Method (Future Volume Alternative)

Intersection #6 Washington St/Indiana Ave

Cycle (sec):	100	Critical Vol./Cap.(X):	0.408
Loss Time (sec):	12 (Y+R=4.0 sec)	Average Delay (sec/veh):	24.1
Optimal Cycle:	50	Level Of Service:	C

Street Name:	Washington St						Indiana Ave					
Approach:	North Bound			South Bound			East Bound			West Bound		
Movement:	L - T - R			L - T - R			L - T - R			L - T - R		
Control:	Permitted			Permitted			Protected			Protected		
Rights:	Ovl			Include			Include			Include		
Min. Green:	7	7	7	7	7	7	7	7	7	7	7	7
Lanes:	1 0	0 1	0	1 0	0 1	0	1 0	1 1	0	1 0	1 1	0
Volume Module:												
Base Vol:	166	1	145	13	5	13	3	390	142	162	418	2
Growth Adj:	1.00	1.00	1.00	1.00	1.00	1.00	1.00	1.00	1.00	1.00	1.00	1.00
Initial Bse:	166	1	145	13	5	13	3	390	142	162	418	2
Added Vol:	0	0	0	0	0	0	0	0	0	0	0	0
PasserByVol:	0	0	0	0	0	0	0	0	0	0	0	0
Initial Fut:	166	1	145	13	5	13	3	390	142	162	418	2
User Adj:	1.00	1.00	1.00	1.00	1.00	1.00	1.00	1.00	1.00	1.00	1.00	1.00
PHF Adj:	1.00	1.00	1.00	1.00	1.00	1.00	1.00	1.00	1.00	1.00	1.00	1.00
PHF Volume:	166	1	145	13	5	13	3	390	142	162	418	2
Reduct Vol:	0	0	0	0	0	0	0	0	0	0	0	0
Reduced Vol:	166	1	145	13	5	13	3	390	142	162	418	2
PCE Adj:	1.00	1.00	1.00	1.00	1.00	1.00	1.00	1.00	1.00	1.00	1.00	1.00
MLF Adj:	1.00	1.00	1.00	1.00	1.00	1.00	1.00	1.00	1.00	1.00	1.00	1.00
FinalVolume:	166	1	145	13	5	13	3	390	142	162	418	2
Saturation Flow Module:												
Sat/Lane:	1900	1900	1900	1900	1900	1900	1900	1900	1900	1900	1900	1900
Adjustment:	0.75	0.85	0.85	0.61	0.89	0.89	0.95	0.91	0.91	0.95	0.95	0.95
Lanes:	1.00	0.01	0.99	1.00	0.28	0.72	1.00	1.47	0.53	1.00	1.99	0.01
Final Sat.:	1433	11	1606	1150	471	1224	1805	2541	925	1805	3589	17
Capacity Analysis Module:												
Vol/Sat:	0.12	0.09	0.09	0.01	0.01	0.01	0.00	0.15	0.15	0.09	0.12	0.12
Crit Moves:	****							****		****		
Green/Cycle:	0.28	0.28	0.50	0.28	0.28	0.28	0.22	0.38	0.38	0.22	0.37	0.37
Volume/Cap:	0.41	0.32	0.18	0.04	0.04	0.04	0.01	0.41	0.41	0.41	0.31	0.31
Delay/Veh:	29.7	28.6	13.6	26.0	25.9	25.9	30.2	23.2	23.2	34.1	22.4	22.4
User DelAdj:	1.00	1.00	1.00	1.00	1.00	1.00	1.00	1.00	1.00	1.00	1.00	1.00
AdjDel/Veh:	29.7	28.6	13.6	26.0	25.9	25.9	30.2	23.2	23.2	34.1	22.4	22.4
LOS by Move:	C	C	B	C	C	C	C	C	C	C	C	C
HCM2kAvgQ:	4	4	2	0	0	0	0	6	6	5	5	5

Note: Queue reported is the number of cars per lane.

Traffix 7.9.0415 (c) 2007 Dowling Assoc. Licensed to MMA, LONG BEACH, CA

Overlook Parkway Extension
Ex Open + Alt4A
PM Peak Hour

Level Of Service Computation Report
2000 HCM 4-Way Stop Method (Future Volume Alternative)

Intersection #7 Washington St/Lincoln Ave

Cycle (sec):	100	Critical Vol./Cap.(X):	0.480
Loss Time (sec):	0 (Y+R=4.0 sec)	Average Delay (sec/veh):	12.3
Optimal Cycle:	0	Level Of Service:	B

Street Name:	Washington St						Lincoln Ave					
Approach:	North Bound			South Bound			East Bound			West Bound		
Movement:	L - T - R			L - T - R			L - T - R			L - T - R		
Control:	Stop Sign			Stop Sign			Stop Sign			Stop Sign		
Rights:	Include			Include			Include			Include		
Min. Green:	7	7	7	7	7	7	7	7	7	7	7	7
Lanes:	0 0	1! 0	0	0 0	1! 0	0	0 0	1! 0	0	0 1	0 0	1
Volume Module:												
Base Vol:	34	195	13	28	245	23	11	197	42	26	140	19
Growth Adj:	1.00	1.00	1.00	1.00	1.00	1.00	1.00	1.00	1.00	1.00	1.00	1.00
Initial Bse:	34	195	13	28	245	23	11	197	42	26	140	19
Added Vol:	0	0	0	0	0	0	0	0	0	0	0	0
PasserByVol:	0	0	0	0	0	0	0	0	0	0	0	0
Initial Fut:	34	195	13	28	245	23	11	197	42	26	140	19
User Adj:	1.00	1.00	1.00	1.00	1.00	1.00	1.00	1.00	1.00	1.00	1.00	1.00
PHF Adj:	1.00	1.00	1.00	1.00	1.00	1.00	1.00	1.00	1.00	1.00	1.00	1.00
PHF Volume:	34	195	13	28	245	23	11	197	42	26	140	19
Reduct Vol:	0	0	0	0	0	0	0	0	0	0	0	0
Reduced Vol:	34	195	13	28	245	23	11	197	42	26	140	19
PCE Adj:	1.00	1.00	1.00	1.00	1.00	1.00	1.00	1.00	1.00	1.00	1.00	1.00
MLF Adj:	1.00	1.00	1.00	1.00	1.00	1.00	1.00	1.00	1.00	1.00	1.00	1.00
FinalVolume:	34	195	13	28	245	23	11	197	42	26	140	19
Saturation Flow Module:												
Adjustment:	1.00	1.00	1.00	1.00	1.00	1.00	1.00	1.00	1.00	1.00	1.00	1.00
Lanes:	0.14	0.81	0.05	0.09	0.83	0.08	0.04	0.79	0.17	0.16	0.84	1.00
Final Sat.:	84	482	32	58	510	48	26	464	99	82	439	587
Capacity Analysis Module:												
Vol/Sat:	0.40	0.40	0.40	0.48	0.48	0.48	0.42	0.42	0.42	0.32	0.32	0.03
Crit Moves:		****			****			****			****	
Delay/Veh:	12.0	12.0	12.0	13.0	13.0	13.0	12.4	12.4	12.4	11.7	11.7	8.5
Delay Adj:	1.00	1.00	1.00	1.00	1.00	1.00	1.00	1.00	1.00	1.00	1.00	1.00
AdjDel/Veh:	12.0	12.0	12.0	13.0	13.0	13.0	12.4	12.4	12.4	11.7	11.7	8.5
LOS by Move:	B	B	B	B	B	B	B	B	B	B	B	A
ApproachDel:	12.0			13.0			12.4			11.4		
Delay Adj:	1.00			1.00			1.00			1.00		
ApprAdjDel:	12.0			13.0			12.4			11.4		
LOS by Appr:	B			B			B			B		
AllWayAvgQ:	0.6	0.6	0.6	0.8	0.8	0.8	0.6	0.6	0.6	0.4	0.4	0.0

Traffix 7.9.0415 (c) 2007 Dowling Assoc. Licensed to MMA, LONG BEACH, CA

Overlook Parkway Extension
Ex Open + Alt4A
PM Peak Hour

Note: Queue reported is the number of cars per lane.

Overlook Parkway Extension
Ex Open + Alt4A
PM Peak Hour

Level Of Service Computation Report
2000 HCM Operations Method (Future Volume Alternative)

Intersection #9 Washington St/Overlook Pkwy

Cycle (sec):	100	Critical Vol./Cap.(X):	0.723
Loss Time (sec):	12 (Y+R=4.0 sec)	Average Delay (sec/veh):	16.7
Optimal Cycle:	63	Level Of Service:	B

Street Name:	Washington St								Overlook Pkwy					
Approach:	North Bound			South Bound			East Bound			West Bound				
Movement:	L	- T	- R	L	- T	- R	L	- T	- R	L	- T	- R		
Control:	Protected			Protected			Protected			Protected				
Rights:	Include			Include			Include			Ovl				
Min. Green:	7	7	7	7	7	7	7	7	7	7	7	7		
Lanes:	0 0	1 1	0	1 0	2 0	0	0 0	0 0	0	1 0	0 0	1		
Volume Module:														
Base Vol:	0	386	18	925	718	0	0	0	0	20	0	777		
Growth Adj:	1.00	1.00	1.00	1.00	1.00	1.00	1.00	1.00	1.00	1.00	1.00	1.00		
Initial Bse:	0	386	18	925	718	0	0	0	0	20	0	777		
Added Vol:	0	0	0	0	0	0	0	0	0	0	0	0		
PasserByVol:	0	0	0	0	0	0	0	0	0	0	0	0		
Initial Fut:	0	386	18	925	718	0	0	0	0	20	0	777		
User Adj:	1.00	1.00	1.00	1.00	1.00	1.00	1.00	1.00	1.00	1.00	1.00	1.00		
PHF Adj:	1.00	1.00	1.00	1.00	1.00	1.00	1.00	1.00	1.00	1.00	1.00	1.00		
PHF Volume:	0	386	18	925	718	0	0	0	0	20	0	777		
Reduct Vol:	0	0	0	0	0	0	0	0	0	0	0	0		
Reduced Vol:	0	386	18	925	718	0	0	0	0	20	0	777		
PCE Adj:	1.00	1.00	1.00	1.00	1.00	1.00	1.00	1.00	1.00	1.00	1.00	1.00		
MLF Adj:	1.00	1.00	1.00	1.00	1.00	1.00	1.00	1.00	1.00	1.00	1.00	1.00		
FinalVolume:	0	386	18	925	718	0	0	0	0	20	0	777		
Saturation Flow Module:														
Sat/Lane:	1900	1900	1900	1900	1900	1900	1900	1900	1900	1900	1900	1900		
Adjustment:	1.00	0.94	0.94	0.95	0.95	1.00	1.00	1.00	1.00	0.95	1.00	0.85		
Lanes:	0.00	1.91	0.09	1.00	2.00	0.00	0.00	0.00	0.00	1.00	0.00	1.00		
Final Sat.:	0	3425	160	1805	3610	0	0	0	0	1805	0	1615		
Capacity Analysis Module:														
Vol/Sat:	0.00	0.11	0.11	0.51	0.20	0.00	0.00	0.00	0.00	0.01	0.00	0.48		
Crit Moves:		****		****						****				
Green/Cycle:	0.00	0.15	0.15	0.66	0.60	0.00	0.00	0.00	0.00	0.07	0.00	0.73		
Volume/Cap:	0.00	0.77	0.77	0.77	0.33	0.00	0.00	0.00	0.00	0.16	0.00	0.66		
Delay/Veh:	0.0	48.1	48.1	14.7	10.1	0.0	0.0	0.0	0.0	44.3	0.0	8.2		
User DelAdj:	1.00	1.00	1.00	1.00	1.00	1.00	1.00	1.00	1.00	1.00	1.00	1.00		
AdjDel/Veh:	0.0	48.1	48.1	14.7	10.1	0.0	0.0	0.0	0.0	44.3	0.0	8.2		
LOS by Move:	A	D	D	B	B	A	A	A	A	D	A	A		
HCM2kAvgQ:	0	8	8	21	6	0	0	0	0	1	0	13		

Note: Queue reported is the number of cars per lane.

Overlook Parkway Extension
Ex Open + Alt4A
PM Peak Hour

Level Of Service Computation Report
2000 HCM Operations Method (Future Volume Alternative)

Intersection #10 Riverside Ave-SR-91 WB/Arlington Ave

Cycle (sec): 100 | Critical Vol./Cap.(X): 0.738
Loss Time (sec): 12 (Y+R=4.0 sec) | Average Delay (sec/veh): 30.5
Optimal Cycle: 65 | Level Of Service: C

Street Name:	Riverside Ave-SR-91 WB						Arlington Ave					
Approach:	North Bound			South Bound			East Bound			West Bound		
Movement:	L - T - R			L - T - R			L - T - R			L - T - R		
Control:	Protected			Protected			Protected			Protected		
Rights:	Include			Ovl			Ignore			Ignore		
Min. Green:	7	7	7	7	7	7	7	7	7	7	7	7
Lanes:	0 0	0 0	0	1 1	0 0	1	1 0	3 0	1	1 0	2 0	1
Volume Module:												
Base Vol:	0	0	0	677	85	431	35	1055	193	410	762	171
Growth Adj:	1.00	1.00	1.00	1.00	1.00	1.00	1.00	1.00	1.00	1.00	1.00	1.00
Initial Bse:	0	0	0	677	85	431	35	1055	193	410	762	171
Added Vol:	0	0	0	0	0	0	0	0	0	0	0	0
PasserByVol:	0	0	0	0	0	0	0	0	0	0	0	0
Initial Fut:	0	0	0	677	85	431	35	1055	193	410	762	171
User Adj:	1.00	1.00	1.00	1.00	1.00	1.00	1.00	1.00	0.00	1.00	1.00	0.00
PHF Adj:	1.00	1.00	1.00	1.00	1.00	1.00	1.00	1.00	0.00	1.00	1.00	0.00
PHF Volume:	0	0	0	677	85	431	35	1055	0	410	762	0
Reduct Vol:	0	0	0	0	0	0	0	0	0	0	0	0
Reduced Vol:	0	0	0	677	85	431	35	1055	0	410	762	0
PCE Adj:	1.00	1.00	1.00	1.00	1.00	1.00	1.00	1.00	0.00	1.00	1.00	0.00
MLF Adj:	1.00	1.00	1.00	1.00	1.00	1.00	1.00	1.00	0.00	1.00	1.00	0.00
FinalVolume:	0	0	0	677	85	431	35	1055	0	410	762	0
Saturation Flow Module:												
Sat/Lane:	1900	1900	1900	1900	1900	1900	1900	1900	1900	1900	1900	1900
Adjustment:	1.00	1.00	1.00	0.92	0.92	0.85	0.95	0.91	1.00	0.95	0.95	1.00
Lanes:	0.00	0.00	0.00	1.78	0.22	1.00	1.00	3.00	1.00	1.00	2.00	1.00
Final Sat.:	0	0	0	3089	388	1615	1805	5187	1900	1805	3610	1900
Capacity Analysis Module:												
Vol/Sat:	0.00	0.00	0.00	0.22	0.22	0.27	0.02	0.20	0.00	0.23	0.21	0.00
Crit Moves:				****				****		****		
Green/Cycle:	0.00	0.00	0.00	0.30	0.29	0.43	0.15	0.28	0.00	0.31	0.44	0.00
Volume/Cap:	0.00	0.00	0.00	0.74	0.77	0.62	0.13	0.74	0.00	0.74	0.48	0.00
Delay/Veh:	0.0	0.0	0.0	34.5	36.3	23.8	37.5	35.0	0.0	36.2	20.3	0.0
User DelAdj:	1.00	1.00	1.00	1.00	1.00	1.00	1.00	1.00	1.00	1.00	1.00	1.00
AdjDel/Veh:	0.0	0.0	0.0	34.5	36.3	23.8	37.5	35.0	0.0	36.2	20.3	0.0
LOS by Move:	A	A	A	C	D	C	D	D	A	D	C	A
HCM2kAvgQ:	0	0	0	12	12	11	1	12	0	13	9	0

Note: Queue reported is the number of cars per lane.

Traffix 7.9.0415 (c) 2007 Dowling Assoc. Licensed to MMA, LONG BEACH, CA

Overlook Parkway Extension
Ex Open + Alt4A
PM Peak Hour

Level Of Service Computation Report
2000 HCM Operations Method (Future Volume Alternative)

Intersection #11 Indiana Ave-SR-91 EB/Arlington Ave

Cycle (sec): 100 | Critical Vol./Cap.(X): 0.643
Loss Time (sec): 12 (Y+R=4.0 sec) | Average Delay (sec/veh): 27.1
Optimal Cycle: 52 | Level Of Service: C

Street Name:	Indiana Ave-SR-91 EB						Arlington Ave					
Approach:	North Bound			South Bound			East Bound			West Bound		
Movement:	L - T - R			L - T - R			L - T - R			L - T - R		
Control:	Protected			Protected			Protected			Protected		
Rights:	Ovl			Include			Ovl			Ignore		
Min. Green:	7	7	7	7	7	7	7	7	7	7	7	7
Lanes:	1 1	1 0	1	0 0	0 0	0	1 0	2 0	1	1 0	4 0	1
Volume Module:												
Base Vol:	206	291	437	0	0	0	338	1017	265	114	1182	185
Growth Adj:	1.00	1.00	1.00	1.00	1.00	1.00	1.00	1.00	1.00	1.00	1.00	1.00
Initial Bse:	206	291	437	0	0	0	338	1017	265	114	1182	185
Added Vol:	0	0	0	0	0	0	0	0	0	0	0	0
PasserByVol:	0	0	0	0	0	0	0	0	0	0	0	0
Initial Fut:	206	291	437	0	0	0	338	1017	265	114	1182	185
User Adj:	1.00	1.00	1.00	1.00	1.00	1.00	1.00	1.00	1.00	1.00	1.00	0.00
PHF Adj:	1.00	1.00	1.00	1.00	1.00	1.00	1.00	1.00	1.00	1.00	1.00	0.00
PHF Volume:	206	291	437	0	0	0	338	1017	265	114	1182	0
Reduct Vol:	0	0	0	0	0	0	0	0	0	0	0	0
Reduced Vol:	206	291	437	0	0	0	338	1017	265	114	1182	0
PCE Adj:	1.00	1.00	1.00	1.00	1.00	1.00	1.00	1.00	1.00	1.00	1.00	0.00
MLF Adj:	1.00	1.00	1.00	1.00	1.00	1.00	1.00	1.00	1.00	1.00	1.00	0.00
FinalVolume:	206	291	437	0	0	0	338	1017	265	114	1182	0
Saturation Flow Module:												
Sat/Lane:	1900	1900	1900	1900	1900	1900	1900	1900	1900	1900	1900	1900
Adjustment:	0.92	0.92	0.85	1.00	1.00	1.00	0.95	0.95	0.85	0.95	0.91	1.00
Lanes:	1.24	1.76	1.00	0.00	0.00	0.00	1.00	2.00	1.00	1.00	4.00	1.00
Final Sat.:	2170	3066	1615	0	0	0	1805	3610	1615	1805	6916	1900
Capacity Analysis Module:												
Vol/Sat:	0.09	0.09	0.27	0.00	0.00	0.00	0.19	0.28	0.16	0.06	0.17	0.00
Crit Moves:			****				****				****	
Green/Cycle:	0.22	0.32	0.43	0.00	0.00	0.00	0.29	0.45	0.67	0.11	0.27	0.00
Volume/Cap:	0.43	0.30	0.63	0.00	0.00	0.00	0.63	0.62	0.24	0.56	0.63	0.00
Delay/Veh:	33.7	26.0	24.3	0.0	0.0	0.0	33.1	21.7	6.5	45.7	32.9	0.0
User DelAdj:	1.00	1.00	1.00	1.00	1.00	1.00	1.00	1.00	1.00	1.00	1.00	1.00
AdjDel/Veh:	33.7	26.0	24.3	0.0	0.0	0.0	33.1	21.7	6.5	45.7	32.9	0.0
LOS by Move:	C	C	C	A	A	A	C	C	A	D	C	A
HCM2kAvgQ:	5	4	11	0	0	0	10	13	3	4	10	0

Note: Queue reported is the number of cars per lane.

Traffix 7.9.0415 (c) 2007 Dowling Assoc. Licensed to MMA, LONG BEACH, CA

Overlook Parkway Extension
Ex Open + Alt4A
PM Peak Hour

Level Of Service Computation Report
2000 HCM Operations Method (Future Volume Alternative)

Intersection #12 Victoria Ave/Arlington Ave

Cycle (sec): 100 | Critical Vol./Cap.(X): 0.705
Loss Time (sec): 16 (Y+R=4.0 sec) | Average Delay (sec/veh): 29.9
Optimal Cycle: 70 | Level Of Service: C

Street Name:	Victoria Ave						Arlington Ave					
Approach:	North Bound			South Bound			East Bound			West Bound		
Movement:	L -	T -	R	L -	T -	R	L -	T -	R	L -	T -	R
Control:	Protected			Protected			Protected			Protected		
Rights:	Ovl			Include			Include			Include		
Min. Green:	7	7	7	7	7	7	7	7	7	7	7	7
Lanes:	1 0	1 0	1	1 0	1 0	1	1 0	1 1	0	1 0	1 1	0
Volume Module:												
Base Vol:	35	147	405	53	232	125	62	1095	28	207	992	18
Growth Adj:	1.00	1.00	1.00	1.00	1.00	1.00	1.00	1.00	1.00	1.00	1.00	1.00
Initial Bse:	35	147	405	53	232	125	62	1095	28	207	992	18
Added Vol:	0	0	0	0	0	0	0	0	0	0	0	0
PasserByVol:	0	0	0	0	0	0	0	0	0	0	0	0
Initial Fut:	35	147	405	53	232	125	62	1095	28	207	992	18
User Adj:	1.00	1.00	1.00	1.00	1.00	1.00	1.00	1.00	1.00	1.00	1.00	1.00
PHF Adj:	1.00	1.00	1.00	1.00	1.00	1.00	1.00	1.00	1.00	1.00	1.00	1.00
PHF Volume:	35	147	405	53	232	125	62	1095	28	207	992	18
Reduct Vol:	0	0	0	0	0	0	0	0	0	0	0	0
Reduced Vol:	35	147	405	53	232	125	62	1095	28	207	992	18
PCE Adj:	1.00	1.00	1.00	1.00	1.00	1.00	1.00	1.00	1.00	1.00	1.00	1.00
MLF Adj:	1.00	1.00	1.00	1.00	1.00	1.00	1.00	1.00	1.00	1.00	1.00	1.00
FinalVolume:	35	147	405	53	232	125	62	1095	28	207	992	18
Saturation Flow Module:												
Sat/Lane:	1900	1900	1900	1900	1900	1900	1900	1900	1900	1900	1900	1900
Adjustment:	0.95	1.00	0.85	0.95	1.00	0.85	0.95	0.95	0.95	0.95	0.95	0.95
Lanes:	1.00	1.00	1.00	1.00	1.00	1.00	1.00	1.95	0.05	1.00	1.96	0.04
Final Sat.:	1805	1900	1615	1805	1900	1615	1805	3506	90	1805	3535	64
Capacity Analysis Module:												
Vol/Sat:	0.02	0.08	0.25	0.03	0.12	0.08	0.03	0.31	0.31	0.11	0.28	0.28
Crit Moves:			****	****				****		****		
Green/Cycle:	0.09	0.19	0.34	0.07	0.16	0.16	0.12	0.43	0.43	0.16	0.47	0.47
Volume/Cap:	0.21	0.42	0.73	0.42	0.75	0.48	0.29	0.73	0.73	0.73	0.60	0.60
Delay/Veh:	42.5	36.7	33.8	46.8	49.7	39.3	41.2	25.7	25.7	49.5	20.3	20.3
User DelAdj:	1.00	1.00	1.00	1.00	1.00	1.00	1.00	1.00	1.00	1.00	1.00	1.00
AdjDel/Veh:	42.5	36.7	33.8	46.8	49.7	39.3	41.2	25.7	25.7	49.5	20.3	20.3
LOS by Move:	D	D	C	D	D	D	D	C	C	D	C	C
HCM2kAvgQ:	1	4	12	2	9	4	2	16	16	8	12	12

Note: Queue reported is the number of cars per lane.

Traffix 7.9.0415 (c) 2007 Dowling Assoc. Licensed to MMA, LONG BEACH, CA

Overlook Parkway Extension
Ex Open + Alt4A
PM Peak Hour

Level Of Service Computation Report
2000 HCM Operations Method (Future Volume Alternative)

Intersection #13 Alessandro Blvd/Arlington Ave

Cycle (sec): 100 | Critical Vol./Cap.(X): 0.824
Loss Time (sec): 16 (Y+R=4.0 sec) | Average Delay (sec/veh): 36.8
Optimal Cycle: 92 | Level Of Service: D

Street Name:	Alessandro Blvd						Arlington Ave					
Approach:	North Bound			South Bound			East Bound			West Bound		
Movement:	L -	T -	R	L -	T -	R	L -	T -	R	L -	T -	R
Control:	Protected			Protected			Protected			Protected		
Rights:	Ovl			Include			Ovl			Ovl		
Min. Green:	7	7	7	7	7	7	7	7	7	7	7	7
Lanes:	2 0	2 0	1	2 0	2 1	0	1 0	2 0	2	2 0	2 0	1
Volume Module:												
Base Vol:	636	544	181	407	1085	11	21	545	787	519	553	204
Growth Adj:	1.00	1.00	1.00	1.00	1.00	1.00	1.00	1.00	1.00	1.00	1.00	1.00
Initial Bse:	636	544	181	407	1085	11	21	545	787	519	553	204
Added Vol:	0	0	0	0	0	0	0	0	0	0	0	0
PasserByVol:	0	0	0	0	0	0	0	0	0	0	0	0
Initial Fut:	636	544	181	407	1085	11	21	545	787	519	553	204
User Adj:	1.00	1.00	1.00	1.00	1.00	1.00	1.00	1.00	1.00	1.00	1.00	1.00
PHF Adj:	1.00	1.00	1.00	1.00	1.00	1.00	1.00	1.00	1.00	1.00	1.00	1.00
PHF Volume:	636	544	181	407	1085	11	21	545	787	519	553	204
Reduct Vol:	0	0	0	0	0	0	0	0	0	0	0	0
Reduced Vol:	636	544	181	407	1085	11	21	545	787	519	553	204
PCE Adj:	1.00	1.00	1.00	1.00	1.00	1.00	1.00	1.00	1.00	1.00	1.00	1.00
MLF Adj:	1.00	1.00	1.00	1.00	1.00	1.00	1.00	1.00	1.00	1.00	1.00	1.00
FinalVolume:	636	544	181	407	1085	11	21	545	787	519	553	204
Saturation Flow Module:												
Sat/Lane:	1900	1900	1900	1900	1900	1900	1900	1900	1900	1900	1900	1900
Adjustment:	0.92	0.95	0.85	0.92	0.91	0.91	0.95	0.95	0.75	0.92	0.95	0.85
Lanes:	2.00	2.00	1.00	2.00	2.97	0.03	1.00	2.00	2.00	2.00	2.00	1.00
Final Sat.:	3502	3610	1615	3502	5130	52	1805	3610	2842	3502	3610	1615
Capacity Analysis Module:												
Vol/Sat:	0.18	0.15	0.11	0.12	0.21	0.21	0.01	0.15	0.28	0.15	0.15	0.13
Crit Moves:	****				****			****		****		
Green/Cycle:	0.22	0.27	0.45	0.21	0.26	0.26	0.11	0.18	0.40	0.18	0.25	0.46
Volume/Cap:	0.82	0.56	0.25	0.56	0.82	0.82	0.10	0.82	0.69	0.82	0.61	0.28
Delay/Veh:	44.3	32.2	17.3	36.5	39.4	39.4	39.9	47.6	26.4	48.2	34.6	17.1
User DelAdj:	1.00	1.00	1.00	1.00	1.00	1.00	1.00	1.00	1.00	1.00	1.00	1.00
AdjDel/Veh:	44.3	32.2	17.3	36.5	39.4	39.4	39.9	47.6	26.4	48.2	34.6	17.1
LOS by Move:	D	C	B	D	D	D	D	D	C	D	C	B
HCM2kAvgQ:	12	8	3	6	14	14	1	11	12	10	9	4

Note: Queue reported is the number of cars per lane.

Traffix 7.9.0415 (c) 2007 Dowling Assoc. Licensed to MMA, LONG BEACH, CA

Overlook Parkway Extension
Ex Open + Alt4A
PM Peak Hour

Level Of Service Computation Report
2000 HCM Operations Method (Future Volume Alternative)

Intersection #14 Alessandro Blvd/Overlook Pkwy

Cycle (sec):	100	Critical Vol./Cap.(X):	1.652
Loss Time (sec):	16 (Y+R=4.0 sec)	Average Delay (sec/veh):	249.4
Optimal Cycle:	130	Level Of Service:	F

Street Name:	Alessandro Blvd						Overlook Pkwy					
Approach:	North Bound			South Bound			East Bound			West Bound		
Movement:	L	T	R	L	T	R	L	T	R	L	T	R
Control:	Protected			Protected			Protected			Protected		
Rights:	Include			Include			Include			Include		
Min. Green:	7	7	7	7	7	7	7	7	7	7	7	7
Lanes:	1 0	3 0	1	1 0	2 1	0	1 0	1 1	0	3 0	0 1	0
Volume Module:												
Base Vol:	438	941	429	8	2300	167	32	63	870	545	179	3
Growth Adj:	1.00	1.00	1.00	1.00	1.00	1.00	1.00	1.00	1.00	1.00	1.00	1.00
Initial Bse:	438	941	429	8	2300	167	32	63	870	545	179	3
Added Vol:	0	0	0	0	0	0	0	0	0	0	0	0
PasserByVol:	0	0	0	0	0	0	0	0	0	0	0	0
Initial Fut:	438	941	429	8	2300	167	32	63	870	545	179	3
User Adj:	1.00	1.00	1.00	1.00	1.00	1.00	1.00	1.00	1.00	1.00	1.00	1.00
PHF Adj:	1.00	1.00	1.00	1.00	1.00	1.00	1.00	1.00	1.00	1.00	1.00	1.00
PHF Volume:	438	941	429	8	2300	167	32	63	870	545	179	3
Reduct Vol:	0	0	0	0	0	0	0	0	0	0	0	0
Reduced Vol:	438	941	429	8	2300	167	32	63	870	545	179	3
PCE Adj:	1.00	1.00	1.00	1.00	1.00	1.00	1.00	1.00	1.00	1.00	1.00	1.00
MLF Adj:	1.00	1.00	1.00	1.00	1.00	1.00	1.00	1.00	1.00	1.00	1.00	1.00
FinalVolume:	438	941	429	8	2300	167	32	63	870	545	179	3
Saturation Flow Module:												
Sat/Lane:	1900	1900	1900	1900	1900	1900	1900	1900	1900	1900	1900	1900
Adjustment:	0.95	0.91	0.85	0.95	0.90	0.90	0.95	0.82	0.82	0.92	1.00	1.00
Lanes:	1.00	3.00	1.00	1.00	2.80	0.20	1.00	1.00	1.00	3.00	0.98	0.02
Final Sat.:	1805	5187	1615	1805	4788	348	1805	1552	1552	5253	1865	31
Capacity Analysis Module:												
Vol/Sat:	0.24	0.18	0.27	0.00	0.48	0.48	0.02	0.04	0.56	0.10	0.10	0.10
Crit Moves:	****				****				****	****		
Green/Cycle:	0.15	0.34	0.34	0.09	0.29	0.29	0.17	0.34	0.34	0.07	0.23	0.23
Volume/Cap:	1.67	0.53	0.77	0.05	1.67	1.67	0.10	0.12	1.67	1.48	0.41	0.41
Delay/Veh:	359.1	26.6	36.1	41.7	339	338.7	35.1	23.0	341.1	277.6	33.0	33.0
User DelAdj:	1.00	1.00	1.00	1.00	1.00	1.00	1.00	1.00	1.00	1.00	1.00	1.00
AdjDel/Veh:	359.1	26.6	36.1	41.7	339	338.7	35.1	23.0	341.1	277.6	33.0	33.0
LOS by Move:	F	C	D	D	F	F	D	C	F	F	C	C
HCM2kAvgQ:	36	9	14	0	73	73	1	1	74	15	5	5

Note: Queue reported is the number of cars per lane.

Traffix 7.9.0415 (c) 2007 Dowling Assoc. Licensed to MMA, LONG BEACH, CA

Overlook Parkway Extension
Ex Open + Alt4A
PM Peak Hour

Level Of Service Computation Report
2000 HCM Operations Method (Future Volume Alternative)

Intersection #15 Alessandro Blvd/Trautwein Rd

Cycle (sec):	100	Critical Vol./Cap.(X):	0.708
Loss Time (sec):	12 (Y+R=4.0 sec)	Average Delay (sec/veh):	20.3
Optimal Cycle:	60	Level Of Service:	C

Street Name:	Alessandro Blvd						Trautwein Rd					
Approach:	North Bound			South Bound			East Bound			West Bound		
Movement:	L	T	R	L	T	R	L	T	R	L	T	R
Control:	Protected			Protected			Protected			Protected		
Rights:	Include			Ignore			Ignore			Include		
Min. Green:	7	7	7	7	7	7	7	7	7	7	7	7
Lanes:	2 0	3 0	0	0 0	3 0	1	3 0	0 0	1	0 0	0 0	0
Volume Module:												
Base Vol:	216	1304	0	0	2217	1232	704	0	155	0	0	0
Growth Adj:	1.00	1.00	1.00	1.00	1.00	1.00	1.00	1.00	1.00	1.00	1.00	1.00
Initial Bse:	216	1304	0	0	2217	1232	704	0	155	0	0	0
Added Vol:	0	0	0	0	0	0	0	0	0	0	0	0
PasserByVol:	0	0	0	0	0	0	0	0	0	0	0	0
Initial Fut:	216	1304	0	0	2217	1232	704	0	155	0	0	0
User Adj:	1.00	1.00	1.00	1.00	1.00	0.00	1.00	1.00	0.00	1.00	1.00	1.00
PHF Adj:	1.00	1.00	1.00	1.00	1.00	0.00	1.00	1.00	0.00	1.00	1.00	1.00
PHF Volume:	216	1304	0	0	2217	0	704	0	0	0	0	0
Reduct Vol:	0	0	0	0	0	0	0	0	0	0	0	0
Reduced Vol:	216	1304	0	0	2217	0	704	0	0	0	0	0
PCE Adj:	1.00	1.00	1.00	1.00	1.00	0.00	1.00	1.00	0.00	1.00	1.00	1.00
MLF Adj:	1.00	1.00	1.00	1.00	1.00	0.00	1.00	1.00	0.00	1.00	1.00	1.00
FinalVolume:	216	1304	0	0	2217	0	704	0	0	0	0	0
Saturation Flow Module:												
Sat/Lane:	1900	1900	1900	1900	1900	1900	1900	1900	1900	1900	1900	1900
Adjustment:	0.92	0.91	1.00	1.00	0.91	1.00	0.92	1.00	1.00	1.00	1.00	1.00
Lanes:	2.00	3.00	0.00	0.00	3.00	1.00	3.00	0.00	1.00	0.00	0.00	0.00
Final Sat.:	3502	5187	0	0	5187	1900	5253	0	1900	0	0	0
Capacity Analysis Module:												
Vol/Sat:	0.06	0.25	0.00	0.00	0.43	0.00	0.13	0.00	0.00	0.00	0.00	0.00
Crit Moves:	****				****		****					
Green/Cycle:	0.09	0.54	0.00	0.00	0.60	0.00	0.19	0.00	0.00	0.00	0.00	0.00
Volume/Cap:	0.71	0.47	0.00	0.00	0.71	0.00	0.71	0.00	0.00	0.00	0.00	0.00
Delay/Veh:	51.9	14.2	0.0	0.0	14.5	0.0	40.3	0.0	0.0	0.0	0.0	0.0
User DelAdj:	1.00	1.00	1.00	1.00	1.00	1.00	1.00	1.00	1.00	1.00	1.00	1.00
AdjDel/Veh:	51.9	14.2	0.0	0.0	14.5	0.0	40.3	0.0	0.0	0.0	0.0	0.0
LOS by Move:	D	B	A	A	B	A	D	A	A	A	A	A
HCM2kAvgQ:	5	9	0	0	18	0	8	0	0	0	0	0

Note: Queue reported is the number of cars per lane.

Traffix 7.9.0415 (c) 2007 Dowling Assoc. Licensed to MMA, LONG BEACH, CA

Overlook Parkway Extension
Ex Open + Alt4A
PM Peak Hour

Level Of Service Computation Report
2000 HCM 4-Way Stop Method (Future Volume Alternative)

Intersection #16 Crystal View Ter/Overlook Pkwy

Cycle (sec):	100	Critical Vol./Cap.(X):	0.799
Loss Time (sec):	0 (Y+R=4.0 sec)	Average Delay (sec/veh):	22.8
Optimal Cycle:	0	Level Of Service:	C

Street Name:	Crystal View Ter							Overlook Pkwy					
Approach:	North Bound			South Bound			East Bound			West Bound			
Movement:	L	- T	- R	L	- T	- R	L	- T	- R	L	- T	- R	
Control:	Stop Sign			Stop Sign			Stop Sign			Stop Sign			
Rights:	Include			Include			Include			Include			
Min. Green:	7	7	7	7	7	7	7	7	7	7	7	7	
Lanes:	0 0	1! 0	0	0 0	1 0	0	1 0	1 1	0	1 0	1 1	0	
Volume Module:													
Base Vol:	33	0	31	0	2	0	1	933	75	12	807	0	
Growth Adj:	1.00	1.00	1.00	1.00	1.00	1.00	1.00	1.00	1.00	1.00	1.00	1.00	
Initial Bse:	33	0	31	0	2	0	1	933	75	12	807	0	
Added Vol:	0	0	0	0	0	0	0	0	0	0	0	0	
PasserByVol:	0	0	0	0	0	0	0	0	0	0	0	0	
Initial Fut:	33	0	31	0	2	0	1	933	75	12	807	0	
User Adj:	1.00	1.00	1.00	1.00	1.00	1.00	1.00	1.00	1.00	1.00	1.00	1.00	
PHF Adj:	1.00	1.00	1.00	1.00	1.00	1.00	1.00	1.00	1.00	1.00	1.00	1.00	
PHF Volume:	33	0	31	0	2	0	1	933	75	12	807	0	
Reduct Vol:	0	0	0	0	0	0	0	0	0	0	0	0	
Reduced Vol:	33	0	31	0	2	0	1	933	75	12	807	0	
PCE Adj:	1.00	1.00	1.00	1.00	1.00	1.00	1.00	1.00	1.00	1.00	1.00	1.00	
MLF Adj:	1.00	1.00	1.00	1.00	1.00	1.00	1.00	1.00	1.00	1.00	1.00	1.00	
FinalVolume:	33	0	31	0	2	0	1	933	75	12	807	0	
Saturation Flow Module:													
Adjustment:	1.00	1.00	1.00	1.00	1.00	1.00	1.00	1.00	1.00	1.00	1.00	1.00	
Lanes:	0.52	0.00	0.48	0.00	1.00	0.00	1.00	1.85	0.15	1.00	2.00	0.00	
Final Sat.:	279	0	262	0	500	0	571	1168	95	545	1195	0	
Capacity Analysis Module:													
Vol/Sat:	0.12	xxxx	0.12	xxxx	0.00	xxxx	0.00	0.80	0.79	0.02	0.68	xxxx	
Crit Moves:	****				****			****			****		
Delay/Veh:	10.3	0.0	10.3	0.0	9.9	0.0	8.9	26.5	25.6	9.3	19.6	0.0	
Delay Adj:	1.00	1.00	1.00	1.00	1.00	1.00	1.00	1.00	1.00	1.00	1.00	1.00	
AdjDel/Veh:	10.3	0.0	10.3	0.0	9.9	0.0	8.9	26.5	25.6	9.3	19.6	0.0	
LOS by Move:	B	*	B	*	A	*	A	D	D	A	C	*	
ApproachDel:	10.3				9.9			26.4			19.5		
Delay Adj:	1.00				1.00			1.00			1.00		
ApprAdjDel:	10.3				9.9			26.4			19.5		
LOS by Appr:	B				A			D			C		
AllWayAvgQ:	0.1	0.1	0.1	0.0	0.0	0.0	0.0	3.3	3.1	0.0	1.8	1.8	

Overlook Parkway Extension
Ex Open + Alt4A
PM Peak Hour

Note: Queue reported is the number of cars per lane.

Overlook Parkway Extension
Ex Open + Alt4A
PM Peak Hour

Level Of Service Computation Report
2000 HCM Unsignalized Method (Future Volume Alternative)

Intersection #17 Kingdom Dr/Overlook Pkwy

Average Delay (sec/veh): 0.9 Worst Case Level Of Service: E[36.3]

Street Name:	Kingdom Dr								Overlook Pkwy							
Approach:	North Bound				South Bound				East Bound				West Bound			
Movement:	L	-	T	-	R	L	-	T	-	R	L	-	T	-	R	L	-	T	-	R
Control:	Stop Sign					Stop Sign					Uncontrolled					Uncontrolled				
Rights:	Include					Include					Include					Include				
Lanes:	0	0	1!	0	0	1	0	0	0	0	1	0	1	1	0	1	0	1	1	0
Volume Module:																				
Base Vol:	16	0	30		3	0		0		0	888		18		29	760		3		
Growth Adj:	1.00	1.00	1.00		1.00	1.00		1.00		1.00	1.00		1.00		1.00	1.00		1.00		
Initial Bse:	16	0	30		3	0		0		0	888		18		29	760		3		
Added Vol:	0	0	0		0	0		0		0	0		0		0	0		0		
PasserByVol:	0	0	0		0	0		0		0	0		0		0	0		0		
Initial Fut:	16	0	30		3	0		0		0	888		18		29	760		3		
User Adj:	1.00	1.00	1.00		1.00	1.00		1.00		1.00	1.00		1.00		1.00	1.00		1.00		
PHF Adj:	1.00	1.00	1.00		1.00	1.00		1.00		1.00	1.00		1.00		1.00	1.00		1.00		
PHF Volume:	16	0	30		3	0		0		0	888		18		29	760		3		
Reduct Vol:	0	0	0		0	0		0		0	0		0		0	0		0		
FinalVolume:	16	0	30		3	0		0		0	888		18		29	760		3		
Critical Gap Module:																				
Critical Gp:	7.5	6.5	6.9		7.5	xxxx	xxxxx	xxxxx	xxxx	xxxxx	4.1	xxxx	xxxxx							
FollowUpTim:	3.5	4.0	3.3		3.5	xxxx	xxxxx	xxxxx	xxxx	xxxxx	2.2	xxxx	xxxxx							
Capacity Module:																				
Cnflict Vol:	1335	1718	453		1264	xxxx	xxxxx	xxxx	xxxx	xxxxx	906	xxxx	xxxxx							
Potent Cap.:	114	91	559		128	xxxx	xxxxx	xxxx	xxxx	xxxxx	759	xxxx	xxxxx							
Move Cap.:	110	87	559		118	xxxx	xxxxx	xxxx	xxxx	xxxxx	759	xxxx	xxxxx							
Volume/Cap:	0.14	0.00	0.05		0.03	xxxx	xxxx	xxxx	xxxx	xxxx	0.04	xxxx	xxxx							
Level Of Service Module:																				
2Way95thQ:	xxxx	xxxx	xxxxx		0.1	xxxx	xxxxx	xxxx	xxxx	xxxxx	0.1	xxxx	xxxxx							
Control Del:	xxxxx	xxxx	xxxxx		36.3	xxxx	xxxxx	xxxxx	xxxx	xxxxx	9.9	xxxx	xxxxx							
LOS by Move:	*	*	*		E	*	*	*	*	*	A	*	*							
Movement:	LT	-	LTR	-	RT	LT	-	LTR	-	RT	LT	-	LTR	-	RT					
Shared Cap.:	xxxx	232	xxxxx		xxxx	xxxx	xxxxx	xxxx	xxxx	xxxxx	xxxx	xxxx	xxxxx							
SharedQueue:	xxxxx	0.7	xxxxx		xxxxx	xxxx	xxxxx	xxxxx	xxxx	xxxxx	xxxxx	xxxx	xxxxx							
Shrd ConDel:	xxxxx	24.3	xxxxx		xxxxx	xxxx	xxxxx	xxxxx	xxxx	xxxxx	xxxxx	xxxx	xxxxx							
Shared LOS:	*	C	*		*	*	*	*	*	*	*	*	*							
ApproachDel:	24.3					36.3					xxxxxx					xxxxxx				
ApproachLOS:	C					E					*					*				

Note: Queue reported is the number of cars per lane.

Overlook Parkway Extension
Ex Open + Alt4A
PM Peak Hour

Level Of Service Computation Report
2000 HCM Unsignalized Method (Future Volume Alternative)

Intersection #18 Kingdom Dr/Green Orchard Pl

Average Delay (sec/veh): 0.9 Worst Case Level Of Service: A[9.0]

Street Name:	Kingdom Dr								Green Orchard Pl							
Approach:	North Bound				South Bound				East Bound				West Bound			
Movement:	L	-	T	-	R	L	-	T	-	R	L	-	T	-	R	L	-	T	-	R
Control:	Uncontrolled					Uncontrolled					Stop Sign					Stop Sign				
Rights:	Include					Include					Include					Include				
Lanes:	0	0	0	1	0	0	1	0	0	0	0	0	0	0	0	0	0	1!	0	0
Volume Module:																				
Base Vol:	0	46	16		2	57		0		0	0		0		8	0		3		
Growth Adj:	1.00	1.00	1.00		1.00	1.00		1.00		1.00	1.00		1.00		1.00	1.00		1.00		
Initial Bse:	0	46	16		2	57		0		0	0		0		8	0		3		
Added Vol:	0	0	0		0	0		0		0	0		0		0	0		0		
PasserByVol:	0	0	0		0	0		0		0	0		0		0	0		0		
Initial Fut:	0	46	16		2	57		0		0	0		0		8	0		3		
User Adj:	1.00	1.00	1.00		1.00	1.00		1.00		1.00	1.00		1.00		1.00	1.00		1.00		
PHF Adj:	1.00	1.00	1.00		1.00	1.00		1.00		1.00	1.00		1.00		1.00	1.00		1.00		
PHF Volume:	0	46	16		2	57		0		0	0		0		8	0		3		
Reduct Vol:	0	0	0		0	0		0		0	0		0		0	0		0		
FinalVolume:	0	46	16		2	57		0		0	0		0		8	0		3		
Critical Gap Module:																				
Critical Gp:	xxxxx	xxxx	xxxxx		4.1	xxxx	xxxxx	xxxxx	xxxx	xxxxx	6.4	6.5	6.2							
FollowUpTim:	xxxxx	xxxx	xxxxx		2.2	xxxx	xxxxx	xxxxx	xxxx	xxxxx	3.5	4.0	3.3							
Capacity Module:																				
Cnflict Vol:	xxxx	xxxx	xxxxx		62	xxxx	xxxxx	xxxx	xxxx	xxxxx	115	115	54							
Potent Cap.:	xxxx	xxxx	xxxxx		1554	xxxx	xxxxx	xxxx	xxxx	xxxxx	886	779	1019							
Move Cap.:	xxxx	xxxx	xxxxx		1554	xxxx	xxxxx	xxxx	xxxx	xxxxx	885	778	1019							
Volume/Cap:	xxxx	xxxx	xxxx		0.00	xxxx	xxxx	xxxx	xxxx	xxxx	0.01	0.00	0.00							
Level Of Service Module:																				
2Way95thQ:	xxxx	xxxx	xxxxx		0.0	xxxx	xxxxx	xxxx	xxxx	xxxxx	xxxx	xxxx	xxxxx							
Control Del:	xxxxx	xxxx	xxxxx		7.3	xxxx	xxxxx	xxxxx	xxxx	xxxxx	xxxxx	xxxx	xxxxx							
LOS by Move:	*	*	*		A	*	*	*	*	*	*	*	*							
Movement:	LT	-	LTR	-	RT	LT	-	LTR	-	RT	LT	-	LTR	-	RT					
Shared Cap.:	xxxx	xxxx	xxxxx		xxxx	xxxx	xxxxx	xxxx	xxxx	xxxxx	xxxx	918	xxxxx							
SharedQueue:	xxxxx	xxxx	xxxxx		0.0	xxxx	xxxxx	xxxxx	xxxx	xxxxx	xxxxx	0.0	xxxxx							
Shrd ConDel:	xxxxx	xxxx	xxxxx		7.3	xxxx	xxxxx	xxxxx	xxxx	xxxxx	xxxxx	9.0	xxxxx							
Shared LOS:	*	*	*		A	*	*	*	*	*	*	A	*							
ApproachDel:	xxxxxx					xxxxxx					xxxxxx					9.0				
ApproachLOS:	*					*					*					A				

Note: Queue reported is the number of cars per lane.

Overlook Parkway Extension
Ex Open + Alt4A
PM Peak Hour

Level Of Service Computation Report
2000 HCM Operations Method (Future Volume Alternative)

Intersection #19 Trautwein Rd/John F. Kennedy Dr

Cycle (sec):	100	Critical Vol./Cap.(X):	0.590
Loss Time (sec):	16 (Y+R=4.0 sec)	Average Delay (sec/veh):	18.1
Optimal Cycle:	56	Level Of Service:	B

Street Name:	Trautwein Rd							John F. Kennedy Dr					
Approach:	North Bound			South Bound			East Bound			West Bound			
Movement:	L	T	R	L	T	R	L	T	R	L	T	R	
Control:	Protected			Protected			Protected			Protected			
Rights:	Include			Ovl			Include			Include			
Min. Green:	7	7	7	7	7	7	7	7	7	7	7	7	
Lanes:	1 0	2 0	1	1 0	2 0	1	2 0	1 0	1	1 0	0 1	0	
Volume Module:													
Base Vol:	47	810	39	30	1374	403	234	21	66	30	24	16	
Growth Adj:	1.00	1.00	1.00	1.00	1.00	1.00	1.00	1.00	1.00	1.00	1.00	1.00	
Initial Bse:	47	810	39	30	1374	403	234	21	66	30	24	16	
Added Vol:	0	0	0	0	0	0	0	0	0	0	0	0	
PasserByVol:	0	0	0	0	0	0	0	0	0	0	0	0	
Initial Fut:	47	810	39	30	1374	403	234	21	66	30	24	16	
User Adj:	1.00	1.00	1.00	1.00	1.00	1.00	1.00	1.00	1.00	1.00	1.00	1.00	
PHF Adj:	1.00	1.00	1.00	1.00	1.00	1.00	1.00	1.00	1.00	1.00	1.00	1.00	
PHF Volume:	47	810	39	30	1374	403	234	21	66	30	24	16	
Reduct Vol:	0	0	0	0	0	0	0	0	0	0	0	0	
Reduced Vol:	47	810	39	30	1374	403	234	21	66	30	24	16	
PCE Adj:	1.00	1.00	1.00	1.00	1.00	1.00	1.00	1.00	1.00	1.00	1.00	1.00	
MLF Adj:	1.00	1.00	1.00	1.00	1.00	1.00	1.00	1.00	1.00	1.00	1.00	1.00	
FinalVolume:	47	810	39	30	1374	403	234	21	66	30	24	16	
Saturation Flow Module:													
Sat/Lane:	1900	1900	1900	1900	1900	1900	1900	1900	1900	1900	1900	1900	
Adjustment:	0.95	0.95	0.85	0.95	0.95	0.85	0.92	1.00	0.85	0.95	0.94	0.94	
Lanes:	1.00	2.00	1.00	1.00	2.00	1.00	2.00	1.00	1.00	1.00	0.60	0.40	
Final Sat.:	1805	3610	1615	1805	3610	1615	3502	1900	1615	1805	1072	714	
Capacity Analysis Module:													
Vol/Sat:	0.03	0.22	0.02	0.02	0.38	0.25	0.07	0.01	0.04	0.02	0.02	0.02	
Crit Moves:	****				****		****				****		
Green/Cycle:	0.07	0.51	0.51	0.16	0.60	0.70	0.10	0.09	0.09	0.09	0.07	0.07	
Volume/Cap:	0.37	0.44	0.05	0.11	0.64	0.36	0.64	0.13	0.47	0.19	0.32	0.32	
Delay/Veh:	46.2	15.8	12.5	36.2	13.9	6.2	46.7	42.5	45.9	42.9	45.7	45.7	
User DelAdj:	1.00	1.00	1.00	1.00	1.00	1.00	1.00	1.00	1.00	1.00	1.00	1.00	
AdjDel/Veh:	46.2	15.8	12.5	36.2	13.9	6.2	46.7	42.5	45.9	42.9	45.7	45.7	
LOS by Move:	D	B	B	D	B	A	D	D	D	D	D	D	
HCM2kAvgQ:	2	8	1	1	15	5	5	1	3	1	2	2	

Note: Queue reported is the number of cars per lane.

Traffix 7.9.0415 (c) 2007 Dowling Assoc. Licensed to MMA, LONG BEACH, CA

Overlook Parkway Extension
Ex Open + Alt4A
PM Peak Hour

Level Of Service Computation Report
2000 HCM Operations Method (Future Volume Alternative)

Intersection #20 Washington St/Bradley St

Cycle (sec):	100	Critical Vol./Cap.(X):	0.594
Loss Time (sec):	12 (Y+R=4.0 sec)	Average Delay (sec/veh):	21.4
Optimal Cycle:	50	Level Of Service:	C

Street Name:	Washington St							Bradley St					
Approach:	North Bound			South Bound			East Bound			West Bound			
Movement:	L	T	R	L	T	R	L	T	R	L	T	R	
Control:	Protected			Protected			Permitted			Permitted			
Rights:	Include			Include			Include			Include			
Min. Green:	7	7	7	7	7	7	7	7	7	7	7	7	
Lanes:	1 0	1 0	1	1 0	0 1	0	0 0	1! 0	0	0 0	1! 0	0	
Volume Module:													
Base Vol:	51	350	25	77	685	0	2	23	199	19	10	27	
Growth Adj:	1.00	1.00	1.00	1.00	1.00	1.00	1.00	1.00	1.00	1.00	1.00	1.00	
Initial Bse:	51	350	25	77	685	0	2	23	199	19	10	27	
Added Vol:	0	0	0	0	0	0	0	0	0	0	0	0	
PasserByVol:	0	0	0	0	0	0	0	0	0	0	0	0	
Initial Fut:	51	350	25	77	685	0	2	23	199	19	10	27	
User Adj:	1.00	1.00	1.00	1.00	1.00	1.00	1.00	1.00	1.00	1.00	1.00	1.00	
PHF Adj:	1.00	1.00	1.00	1.00	1.00	1.00	1.00	1.00	1.00	1.00	1.00	1.00	
PHF Volume:	51	350	25	77	685	0	2	23	199	19	10	27	
Reduct Vol:	0	0	0	0	0	0	0	0	0	0	0	0	
Reduced Vol:	51	350	25	77	685	0	2	23	199	19	10	27	
PCE Adj:	1.00	1.00	1.00	1.00	1.00	1.00	1.00	1.00	1.00	1.00	1.00	1.00	
MLF Adj:	1.00	1.00	1.00	1.00	1.00	1.00	1.00	1.00	1.00	1.00	1.00	1.00	
FinalVolume:	51	350	25	77	685	0	2	23	199	19	10	27	
Saturation Flow Module:													
Sat/Lane:	1900	1900	1900	1900	1900	1900	1900	1900	1900	1900	1900	1900	
Adjustment:	0.95	1.00	0.85	0.95	1.00	1.00	0.88	0.88	0.88	0.83	0.83	0.83	
Lanes:	1.00	1.00	1.00	1.00	1.00	0.00	0.01	0.10	0.89	0.34	0.18	0.48	
Final Sat.:	1805	1900	1615	1805	1900	0	15	172	1484	532	280	756	
Capacity Analysis Module:													
Vol/Sat:	0.03	0.18	0.02	0.04	0.36	0.00	0.13	0.13	0.13	0.04	0.04	0.04	
Crit Moves:	****				****			****					
Green/Cycle:	0.07	0.48	0.48	0.18	0.59	0.00	0.22	0.22	0.22	0.22	0.22	0.22	
Volume/Cap:	0.40	0.38	0.03	0.23	0.61	0.00	0.61	0.61	0.61	0.16	0.16	0.16	
Delay/Veh:	46.6	16.9	13.8	35.3	14.1	0.0	38.2	38.2	38.2	31.8	31.8	31.8	
User DelAdj:	1.00	1.00	1.00	1.00	1.00	1.00	1.00	1.00	1.00	1.00	1.00	1.00	
AdjDel/Veh:	46.6	16.9	13.8	35.3	14.1	0.0	38.2	38.2	38.2	31.8	31.8	31.8	
LOS by Move:	D	B	B	D	B	A	D	D	D	C	C	C	
HCM2kAvgQ:	2	7	0	2	14	0	7	7	7	1	1	1	

Note: Queue reported is the number of cars per lane.

Traffix 7.9.0415 (c) 2007 Dowling Assoc. Licensed to MMA, LONG BEACH, CA

Overlook Parkway Extension
Ex Open + Alt4A
PM Peak Hour

Level Of Service Computation Report
2000 HCM Operations Method (Future Volume Alternative)

Intersection #21 Alessandro Blvd/Via Vista Dr

Cycle (sec):	100	Critical Vol./Cap.(X):	0.713
Loss Time (sec):	16 (Y+R=4.0 sec)	Average Delay (sec/veh):	17.4
Optimal Cycle:	71	Level Of Service:	B

Street Name:	Alessandro Blvd								Via Vista Dr					
Approach:	North Bound			South Bound			East Bound			West Bound				
Movement:	L	T	R	L	T	R	L	T	R	L	T	R		
Control:	Protected			Protected			Protected			Protected				
Rights:	Include			Include			Include			Include				
Min. Green:	7	7	7	7	7	7	7	7	7	7	7	7		
Lanes:	1 0	2 1	0	1 0	2 1	0	1 0	1 0	1	1 0	1 0	1		
Volume Module:														
Base Vol:	88	1028	40	47	2356	41	8	18	58	91	18	12		
Growth Adj:	1.00	1.00	1.00	1.00	1.00	1.00	1.00	1.00	1.00	1.00	1.00	1.00		
Initial Bse:	88	1028	40	47	2356	41	8	18	58	91	18	12		
Added Vol:	0	0	0	0	0	0	0	0	0	0	0	0		
PasserByVol:	0	0	0	0	0	0	0	0	0	0	0	0		
Initial Fut:	88	1028	40	47	2356	41	8	18	58	91	18	12		
User Adj:	1.00	1.00	1.00	1.00	1.00	1.00	1.00	1.00	1.00	1.00	1.00	1.00		
PHF Adj:	1.00	1.00	1.00	1.00	1.00	1.00	1.00	1.00	1.00	1.00	1.00	1.00		
PHF Volume:	88	1028	40	47	2356	41	8	18	58	91	18	12		
Reduct Vol:	0	0	0	0	0	0	0	0	0	0	0	0		
Reduced Vol:	88	1028	40	47	2356	41	8	18	58	91	18	12		
PCE Adj:	1.00	1.00	1.00	1.00	1.00	1.00	1.00	1.00	1.00	1.00	1.00	1.00		
MLF Adj:	1.00	1.00	1.00	1.00	1.00	1.00	1.00	1.00	1.00	1.00	1.00	1.00		
FinalVolume:	88	1028	40	47	2356	41	8	18	58	91	18	12		
Saturation Flow Module:														
Sat/Lane:	1900	1900	1900	1900	1900	1900	1900	1900	1900	1900	1900	1900		
Adjustment:	0.95	0.90	0.90	0.95	0.91	0.91	0.95	1.00	0.85	0.95	1.00	0.85		
Lanes:	1.00	2.89	0.11	1.00	2.95	0.05	1.00	1.00	1.00	1.00	1.00	1.00		
Final Sat.:	1805	4963	193	1805	5083	88	1805	1900	1615	1805	1900	1615		
Capacity Analysis Module:														
Vol/Sat:	0.05	0.21	0.21	0.03	0.46	0.46	0.00	0.01	0.04	0.05	0.01	0.01		
Crit Moves:	****				****				****	****				
Green/Cycle:	0.07	0.52	0.52	0.18	0.63	0.63	0.07	0.07	0.07	0.07	0.07	0.07		
Volume/Cap:	0.70	0.40	0.40	0.15	0.74	0.74	0.06	0.14	0.51	0.72	0.14	0.11		
Delay/Veh:	61.1	14.4	14.4	35.0	13.7	13.7	43.6	44.1	48.8	63.7	44.1	44.0		
User DelAdj:	1.00	1.00	1.00	1.00	1.00	1.00	1.00	1.00	1.00	1.00	1.00	1.00		
AdjDel/Veh:	61.1	14.4	14.4	35.0	13.7	13.7	43.6	44.1	48.8	63.7	44.1	44.0		
LOS by Move:	E	B	B	D	B	B	D	D	D	E	D	D		
HCM2kAvgQ:	4	7	7	1	19	19	0	1	2	4	1	0		

Note: Queue reported is the number of cars per lane.

Traffix 7.9.0415 (c) 2007 Dowling Assoc. Licensed to MMA, LONG BEACH, CA

Overlook Parkway Extension
Ex Open + Alt4A
PM Peak Hour

Level Of Service Computation Report
2000 HCM 4-Way Stop Method (Future Volume Alternative)

Intersection #23 Mary St/Hawarden Dr

Cycle (sec):	100	Critical Vol./Cap.(X):	0.132
Loss Time (sec):	0 (Y+R=4.0 sec)	Average Delay (sec/veh):	7.3
Optimal Cycle:	0	Level Of Service:	A

Street Name:	Mary St								Hawarden Dr					
Approach:	North Bound			South Bound			East Bound			West Bound				
Movement:	L	T	R	L	T	R	L	T	R	L	T	R		
Control:	Stop Sign			Stop Sign			Stop Sign			Stop Sign				
Rights:	Include			Include			Include			Include				
Min. Green:	7	7	7	7	7	7	7	7	7	7	7	7		
Lanes:	0 1	0 0	0	0 0	0 1	0	0 0	1! 0	0	0 0	0 0	0		
Volume Module:														
Base Vol:	7	26	0	0	81	43	20	0	14	0	0	0		
Growth Adj:	1.00	1.00	1.00	1.00	1.00	1.00	1.00	1.00	1.00	1.00	1.00	1.00		
Initial Bse:	7	26	0	0	81	43	20	0	14	0	0	0		
Added Vol:	0	0	0	0	0	0	0	0	0	0	0	0		
PasserByVol:	0	0	0	0	0	0	0	0	0	0	0	0		
Initial Fut:	7	26	0	0	81	43	20	0	14	0	0	0		
User Adj:	1.00	1.00	1.00	1.00	1.00	1.00	1.00	1.00	1.00	1.00	1.00	1.00		
PHF Adj:	1.00	1.00	1.00	1.00	1.00	1.00	1.00	1.00	1.00	1.00	1.00	1.00		
PHF Volume:	7	26	0	0	81	43	20	0	14	0	0	0		
Reduct Vol:	0	0	0	0	0	0	0	0	0	0	0	0		
Reduced Vol:	7	26	0	0	81	43	20	0	14	0	0	0		
PCE Adj:	1.00	1.00	1.00	1.00	1.00	1.00	1.00	1.00	1.00	1.00	1.00	1.00		
MLF Adj:	1.00	1.00	1.00	1.00	1.00	1.00	1.00	1.00	1.00	1.00	1.00	1.00		
FinalVolume:	7	26	0	0	81	43	20	0	14	0	0	0		
Saturation Flow Module:														
Adjustment:	1.00	1.00	1.00	1.00	1.00	1.00	1.00	1.00	1.00	1.00	1.00	1.00		
Lanes:	0.21	0.79	0.00	0.00	0.65	0.35	0.59	0.00	0.41	0.00	0.00	0.00		
Final Sat.:	183	680	0	0	615	326	503	0	352	0	0	0		
Capacity Analysis Module:														
Vol/Sat:	0.04	0.04	xxxx	xxxx	0.13	0.13	0.04	xxxx	0.04	xxxx	xxxx	xxxx		
Crit Moves:		****			****		****							
Delay/Veh:	7.3	7.3	0.0	0.0	7.4	7.4	7.2	0.0	7.2	0.0	0.0	0.0		
Delay Adj:	1.00	1.00	1.00	1.00	1.00	1.00	1.00	1.00	1.00	1.00	1.00	1.00		
AdjDel/Veh:	7.3	7.3	0.0	0.0	7.4	7.4	7.2	0.0	7.2	0.0	0.0	0.0		
LOS by Move:	A	A	*	*	A	A	A	*	A	*	*	*		
ApproachDel:	7.3				7.4		7.2			xxxxxx				
Delay Adj:	1.00				1.00		1.00			xxxxx				
ApprAdjDel:	7.3				7.4		7.2			xxxxxx				
LOS by Appr:	A				A		A			*				
AllWayAvgQ:	0.0	0.0	0.0	0.1	0.1	0.1	0.0	0.0	0.0	0.0	0.0	0.0		

Traffix 7.9.0415 (c) 2007 Dowling Assoc. Licensed to MMA, LONG BEACH, CA

Overlook Parkway Extension
Ex Open + Alt4A
PM Peak Hour

Note: Queue reported is the number of cars per lane.

Overlook Parkway Extension
Ex Open + Alt4A
PM Peak Hour

Level Of Service Computation Report
2000 HCM 4-Way Stop Method (Future Volume Alternative)

Intersection #24 Hawarden Dr/Overlook Pkwy

Cycle (sec):	100	Critical Vol./Cap.(X):	0.717
Loss Time (sec):	0 (Y+R=4.0 sec)	Average Delay (sec/veh):	18.5
Optimal Cycle:	0	Level Of Service:	C

Street Name:	Hawarden Dr						Overlook Pkwy					
Approach:	North Bound			South Bound			East Bound			West Bound		
Movement:	L - T - R			L - T - R			L - T - R			L - T - R		
Control:	Stop Sign			Stop Sign			Stop Sign			Stop Sign		
Rights:	Include			Include			Include			Include		
Min. Green:	7	7	7	7	7	7	7	7	7	7	7	7
Lanes:	0 0	1! 0	0	0 0	1! 0	0	1 0	1 1	0	1 0	1 1	0
Volume Module:												
Base Vol:	27	5	14	22	13	8	9	849	59	10	705	27
Growth Adj:	1.00	1.00	1.00	1.00	1.00	1.00	1.00	1.00	1.00	1.00	1.00	1.00
Initial Bse:	27	5	14	22	13	8	9	849	59	10	705	27
Added Vol:	0	0	0	0	0	0	0	0	0	0	0	0
PasserByVol:	0	0	0	0	0	0	0	0	0	0	0	0
Initial Fut:	27	5	14	22	13	8	9	849	59	10	705	27
User Adj:	1.00	1.00	1.00	1.00	1.00	1.00	1.00	1.00	1.00	1.00	1.00	1.00
PHF Adj:	1.00	1.00	1.00	1.00	1.00	1.00	1.00	1.00	1.00	1.00	1.00	1.00
PHF Volume:	27	5	14	22	13	8	9	849	59	10	705	27
Reduct Vol:	0	0	0	0	0	0	0	0	0	0	0	0
Reduced Vol:	27	5	14	22	13	8	9	849	59	10	705	27
PCE Adj:	1.00	1.00	1.00	1.00	1.00	1.00	1.00	1.00	1.00	1.00	1.00	1.00
MLF Adj:	1.00	1.00	1.00	1.00	1.00	1.00	1.00	1.00	1.00	1.00	1.00	1.00
FinalVolume:	27	5	14	22	13	8	9	849	59	10	705	27
Saturation Flow Module:												
Adjustment:	1.00	1.00	1.00	1.00	1.00	1.00	1.00	1.00	1.00	1.00	1.00	1.00
Lanes:	0.59	0.11	0.30	0.51	0.30	0.19	1.00	1.87	0.13	1.00	1.93	0.07
Final Sat.:	303	56	157	261	154	95	573	1185	83	550	1168	45
Capacity Analysis Module:												
Vol/Sat:	0.09	0.09	0.09	0.08	0.08	0.08	0.02	0.72	0.71	0.02	0.60	0.60
Crit Moves:		****			****			****			****	
Delay/Veh:	10.3	10.3	10.3	10.3	10.3	10.3	9.0	20.9	20.4	9.2	16.7	16.6
Delay Adj:	1.00	1.00	1.00	1.00	1.00	1.00	1.00	1.00	1.00	1.00	1.00	1.00
AdjDel/Veh:	10.3	10.3	10.3	10.3	10.3	10.3	9.0	20.9	20.4	9.2	16.7	16.6
LOS by Move:	B	B	B	B	B	B	A	C	C	A	C	C
ApproachDel:		10.3			10.3			20.7			16.6	
Delay Adj:		1.00			1.00			1.00			1.00	
ApprAdjDel:		10.3			10.3			20.7			16.6	
LOS by Appr:		B			B			C			C	
AllWayAvgQ:	0.1	0.1	0.1	0.1	0.1	0.1	0.0	2.3	2.2	0.0	1.4	1.4

Overlook Parkway Extension
Ex Open + Alt4A
PM Peak Hour

Note: Queue reported is the number of cars per lane.

Overlook Parkway Extension
Ex Open + Alt4A
PM Peak Hour

Level Of Service Computation Report
2000 HCM 4-Way Stop Method (Future Volume Alternative)

Intersection #25 Crystal View Ter/Berry Rd

Cycle (sec):	100	Critical Vol./Cap.(X):	0.120
Loss Time (sec):	0 (Y+R=4.0 sec)	Average Delay (sec/veh):	7.4
Optimal Cycle:	0	Level Of Service:	A

Street Name:	Crystal View Ter									Berry Rd					
Approach:	North Bound			South Bound			East Bound			West Bound					
Movement:	L	- T	- R	L	- T	- R	L	- T	- R	L	- T	- R	L	- T	- R
Control:	Stop Sign			Stop Sign			Stop Sign			Stop Sign					
Rights:	Include			Include			Include			Include					
Min. Green:	7	7	7	7	7	7	7	7	7	7	7	7			
Lanes:	0 0	1! 0	0	0 0	1! 0	0	0 0	1! 0	0	0 0	1! 0	0			
Volume Module:															
Base Vol:	2	31	35	49	51	2	2	0	2	29	1	30			
Growth Adj:	1.00	1.00	1.00	1.00	1.00	1.00	1.00	1.00	1.00	1.00	1.00	1.00			
Initial Bse:	2	31	35	49	51	2	2	0	2	29	1	30			
Added Vol:	0	0	0	0	0	0	0	0	0	0	0	0			
PasserByVol:	0	0	0	0	0	0	0	0	0	0	0	0			
Initial Fut:	2	31	35	49	51	2	2	0	2	29	1	30			
User Adj:	1.00	1.00	1.00	1.00	1.00	1.00	1.00	1.00	1.00	1.00	1.00	1.00			
PHF Adj:	1.00	1.00	1.00	1.00	1.00	1.00	1.00	1.00	1.00	1.00	1.00	1.00			
PHF Volume:	2	31	35	49	51	2	2	0	2	29	1	30			
Reduct Vol:	0	0	0	0	0	0	0	0	0	0	0	0			
Reduced Vol:	2	31	35	49	51	2	2	0	2	29	1	30			
PCE Adj:	1.00	1.00	1.00	1.00	1.00	1.00	1.00	1.00	1.00	1.00	1.00	1.00			
MLF Adj:	1.00	1.00	1.00	1.00	1.00	1.00	1.00	1.00	1.00	1.00	1.00	1.00			
FinalVolume:	2	31	35	49	51	2	2	0	2	29	1	30			
Saturation Flow Module:															
Adjustment:	1.00	1.00	1.00	1.00	1.00	1.00	1.00	1.00	1.00	1.00	1.00	1.00			
Lanes:	0.03	0.46	0.51	0.48	0.50	0.02	0.50	0.00	0.50	0.48	0.02	0.50			
Final Sat.:	27	420	475	408	424	17	421	0	421	414	14	429			
Capacity Analysis Module:															
Vol/Sat:	0.07	0.07	0.07	0.12	0.12	0.12	0.00	xxxx	0.00	0.07	0.07	0.07			
Crit Moves:	****				****		****				****				
Delay/Veh:	7.1	7.1	7.1	7.7	7.7	7.7	7.1	0.0	7.1	7.3	7.3	7.3			
Delay Adj:	1.00	1.00	1.00	1.00	1.00	1.00	1.00	1.00	1.00	1.00	1.00	1.00			
AdjDel/Veh:	7.1	7.1	7.1	7.7	7.7	7.7	7.1	0.0	7.1	7.3	7.3	7.3			
LOS by Move:	A	A	A	A	A	A	A	*	A	A	A	A			
ApproachDel:	7.1			7.7			7.1			7.3					
Delay Adj:	1.00			1.00			1.00			1.00					
ApprAdjDel:	7.1			7.7			7.1			7.3					
LOS by Appr:	A			A			A			A					
AllWayAvgQ:	0.1	0.1	0.1	0.1	0.1	0.1	0.0	0.0	0.0	0.1	0.1	0.1			

Overlook Parkway Extension
Ex Open + Alt4A
PM Peak Hour

Note: Queue reported is the number of cars per lane.

Overlook Parkway Extension
Ex Open + Alt4A
PM Peak Hour

Level Of Service Computation Report
2000 HCM 4-Way Stop Method (Future Volume Alternative)

Intersection #26 Corinthian Wy/Berry Rd

Cycle (sec):	100	Critical Vol./Cap.(X):	0.077
Loss Time (sec):	0 (Y+R=4.0 sec)	Average Delay (sec/veh):	7.2
Optimal Cycle:	0	Level Of Service:	A

Street Name:	Corinthian Wy									Berry Rd					
Approach:	North Bound			South Bound			East Bound			West Bound					
Movement:	L	- T	- R	L	- T	- R	L	- T	- R	L	- T	- R	L	- T	- R
Control:	Stop Sign			Stop Sign			Stop Sign			Stop Sign					
Rights:	Include			Include			Include			Include					
Min. Green:	7	7	7	7	7	7	7	7	7	7	7	7			
Lanes:	0 0	0 0	0	0 0	1! 0	0	0 1	0 0	0	0 0	0 1	0			
Volume Module:															
Base Vol:	0	0	0	6	0	12	14	55	0	0	38	4			
Growth Adj:	1.00	1.00	1.00	1.00	1.00	1.00	1.00	1.00	1.00	1.00	1.00	1.00			
Initial Bse:	0	0	0	6	0	12	14	55	0	0	38	4			
Added Vol:	0	0	0	0	0	0	0	0	0	0	0	0			
PasserByVol:	0	0	0	0	0	0	0	0	0	0	0	0			
Initial Fut:	0	0	0	6	0	12	14	55	0	0	38	4			
User Adj:	1.00	1.00	1.00	1.00	1.00	1.00	1.00	1.00	1.00	1.00	1.00	1.00			
PHF Adj:	1.00	1.00	1.00	1.00	1.00	1.00	1.00	1.00	1.00	1.00	1.00	1.00			
PHF Volume:	0	0	0	6	0	12	14	55	0	0	38	4			
Reduct Vol:	0	0	0	0	0	0	0	0	0	0	0	0			
Reduced Vol:	0	0	0	6	0	12	14	55	0	0	38	4			
PCE Adj:	1.00	1.00	1.00	1.00	1.00	1.00	1.00	1.00	1.00	1.00	1.00	1.00			
MLF Adj:	1.00	1.00	1.00	1.00	1.00	1.00	1.00	1.00	1.00	1.00	1.00	1.00			
FinalVolume:	0	0	0	6	0	12	14	55	0	0	38	4			
Saturation Flow Module:															
Adjustment:	1.00	1.00	1.00	1.00	1.00	1.00	1.00	1.00	1.00	1.00	1.00	1.00			
Lanes:	0.00	0.00	0.00	0.33	0.00	0.67	0.20	0.80	0.00	0.00	0.90	0.10			
Final Sat.:	0	0	0	309	0	618	181	711	0	0	821	86			
Capacity Analysis Module:															
Vol/Sat:	xxxx	xxxx	xxxx	0.02	xxxx	0.02	0.08	0.08	xxxx	xxxx	0.05	0.05			
Crit Moves:				****				****				****			
Delay/Veh:	0.0	0.0	0.0	6.9	0.0	6.9	7.3	7.3	0.0	0.0	7.1	7.1			
Delay Adj:	1.00	1.00	1.00	1.00	1.00	1.00	1.00	1.00	1.00	1.00	1.00	1.00			
AdjDel/Veh:	0.0	0.0	0.0	6.9	0.0	6.9	7.3	7.3	0.0	0.0	7.1	7.1			
LOS by Move:	*	*	*	A	*	A	A	A	*	*	A	A			
ApproachDel:	xxxxxx			6.9			7.3			7.1					
Delay Adj:	xxxxx			1.00			1.00			1.00					
ApprAdjDel:	xxxxxx			6.9			7.3			7.1					
LOS by Appr:	*			A			A			A					
AllWayAvgQ:	0.0	0.0	0.0	0.0	0.0	0.0	0.1	0.1	0.1	0.0	0.0	0.0			

Overlook Parkway Extension
Ex Open + Alt4A
PM Peak Hour

Note: Queue reported is the number of cars per lane.

Traffix 7.9.0415 (c) 2007 Dowling Assoc. Licensed to MMA, LONG BEACH, CA

HCM Unsignalized Intersection Capacity Analysis
27: Madison St & Dufferin Ave

11/8/2011

Movement	EBL	EBR	SBL	SBR	NEL2	NEL	NET	SWT	SWR	SWR2
Lane Configurations										
Sign Control	Stop		Stop				Stop	Stop		
Volume (vph)	47	2	0	1	4	1	12	8	18	3
Peak Hour Factor	1.00	1.00	1.00	1.00	1.00	1.00	1.00	1.00	1.00	1.00
Hourly flow rate (vph)	47	2	0	1	4	1	12	8	18	3

Direction, Lane #	EB 1	SB 1	NE 1	SW 1
Volume Total (vph)	49	1	17	29
Volume Left (vph)	0	0	4	8
Volume Right (vph)	2	0	12	3
Hadj (s)	-0.01	0.02	-0.36	0.01
Departure Headway (s)	4.0	4.1	3.7	4.0
Degree Utilization, x	0.05	0.00	0.02	0.03
Capacity (veh/h)	898	857	939	891
Control Delay (s)	7.2	7.1	6.8	7.1
Approach Delay (s)	7.2	7.1	6.8	7.1
Approach LOS	A	A	A	A

Intersection Summary				
Delay		7.1		
HCM Level of Service		A		
Intersection Capacity Utilization		21.7%	ICU Level of Service	A
Analysis Period (min)		15		

Overlook Parkway Extension
Ex Open + Alt4A
PM Peak Hour

Level Of Service Computation Report
2000 HCM Unsignalized Method (Future Volume Alternative)

Intersection #28 Orozco Dr/Overlook Pkwy

Average Delay (sec/veh): 1.6 Worst Case Level Of Service: E[42.5]

Street Name:	Orozco Dr						Overlook Pkwy					
Approach:	North Bound			South Bound			East Bound			West Bound		
Movement:	L - T - R			L - T - R			L - T - R			L - T - R		
Control:	Stop Sign			Stop Sign			Uncontrolled			Uncontrolled		
Rights:	Include			Include			Include			Include		
Lanes:	0 0 1! 0 0			0 0 1! 0 0			1 0 1 1 0			1 0 1 1 0		
Volume Module:												
Base Vol:	8	0	1	42	2	10	11	823	12	0	816	10
Growth Adj:	1.00	1.00	1.00	1.00	1.00	1.00	1.00	1.00	1.00	1.00	1.00	1.00
Initial Bse:	8	0	1	42	2	10	11	823	12	0	816	10
Added Vol:	0	0	0	0	0	0	0	0	0	0	0	0
PasserByVol:	0	0	0	0	0	0	0	0	0	0	0	0
Initial Fut:	8	0	1	42	2	10	11	823	12	0	816	10
User Adj:	1.00	1.00	1.00	1.00	1.00	1.00	1.00	1.00	1.00	1.00	1.00	1.00
PHF Adj:	1.00	1.00	1.00	1.00	1.00	1.00	1.00	1.00	1.00	1.00	1.00	1.00
PHF Volume:	8	0	1	42	2	10	11	823	12	0	816	10
Reduct Vol:	0	0	0	0	0	0	0	0	0	0	0	0
FinalVolume:	8	0	1	42	2	10	11	823	12	0	816	10
Critical Gap Module:												
Critical Gp:	7.5	6.5	6.9	7.5	6.5	6.9	4.1	xxxx	xxxxx	xxxxx	xxxx	xxxxx
FollowUpTim:	3.5	4.0	3.3	3.5	4.0	3.3	2.2	xxxx	xxxxx	xxxxx	xxxx	xxxxx
Capacity Module:												
Cnflict Vol:	1260	1677	418	1255	1678	413	826	xxxx	xxxxx	xxxx	xxxx	xxxxx
Potent Cap.:	129	96	590	130	96	594	813	xxxx	xxxxx	xxxx	xxxx	xxxxx
Move Cap.:	124	95	590	129	95	594	813	xxxx	xxxxx	xxxx	xxxx	xxxxx
Volume/Cap:	0.06	0.00	0.00	0.33	0.02	0.02	0.01	xxxx	xxxx	xxxx	xxxx	xxxx
Level Of Service Module:												
2Way95thQ:	xxxx	xxxx	xxxxx	xxxx	xxxx	xxxxx	0.0	xxxx	xxxxx	xxxx	xxxx	xxxxx
Control Del:	xxxxx	xxxx	xxxxx	xxxxx	xxxx	xxxxx	9.5	xxxx	xxxxx	xxxxx	xxxx	xxxxx
LOS by Move:	*	*	*	*	*	*	A	*	*	*	*	*
Movement:	LT -	LTR -	RT	LT -	LTR -	RT	LT -	LTR -	RT	LT -	LTR -	RT
Shared Cap.:	xxxx	136	xxxxx	xxxx	148	xxxxx	xxxx	xxxx	xxxxx	xxxx	xxxx	xxxxx
SharedQueue:	xxxxx	0.2	xxxxx	xxxxx	1.5	xxxxx	xxxxx	xxxx	xxxxx	xxxxx	xxxx	xxxxx
Shrd ConDel:	xxxxx	33.4	xxxxx	xxxxx	42.5	xxxxx	xxxxx	xxxx	xxxxx	xxxxx	xxxx	xxxxx
Shared LOS:	*	D	*	*	E	*	*	*	*	*	*	*
ApproachDel:	33.4			42.5			xxxxxx			xxxxxx		
ApproachLOS:	D			E			*			*		

Note: Queue reported is the number of cars per lane.

Overlook Parkway Extension
Ex Open + Alt4A
PM Peak Hour

Level Of Service Computation Report
2000 HCM 4-Way Stop Method (Future Volume Alternative)

Intersection #51 Madison St/Victoria Ave (North)

Cycle (sec): 100 Critical Vol./Cap.(X): 1.280
Loss Time (sec): 0 (Y+R=4.0 sec) Average Delay (sec/veh): 97.6
Optimal Cycle: 0 Level Of Service: F

Street Name:	Madison St						Victoria Ave (North)					
Approach:	North Bound			South Bound			East Bound			West Bound		
Movement:	L - T - R			L - T - R			L - T - R			L - T - R		
Control:	Stop Sign			Stop Sign			Stop Sign			Stop Sign		
Rights:	Include			Include			Include			Include		
Min. Green:	7	7	7	7	7	7	7	7	7	7	7	7
Lanes:	0 1 0 0 0			0 0 1 0 1			0 0 0 0 0			0 1 0 0 1		
Volume Module:												
Base Vol:	383	427	0	0	578	35	0	0	0	11	77	6
Growth Adj:	1.00	1.00	1.00	1.00	1.00	1.00	1.00	1.00	1.00	1.00	1.00	1.00
Initial Bse:	383	427	0	0	578	35	0	0	0	11	77	6
Added Vol:	0	0	0	0	0	0	0	0	0	0	0	0
PasserByVol:	0	0	0	0	0	0	0	0	0	0	0	0
Initial Fut:	383	427	0	0	578	35	0	0	0	11	77	6
User Adj:	1.00	1.00	1.00	1.00	1.00	1.00	1.00	1.00	1.00	1.00	1.00	1.00
PHF Adj:	1.00	1.00	1.00	1.00	1.00	1.00	1.00	1.00	1.00	1.00	1.00	1.00
PHF Volume:	383	427	0	0	578	35	0	0	0	11	77	6
Reduct Vol:	0	0	0	0	0	0	0	0	0	0	0	0
Reduced Vol:	383	427	0	0	578	35	0	0	0	11	77	6
PCE Adj:	1.00	1.00	1.00	1.00	1.00	1.00	1.00	1.00	1.00	1.00	1.00	1.00
MLF Adj:	1.00	1.00	1.00	1.00	1.00	1.00	1.00	1.00	1.00	1.00	1.00	1.00
FinalVolume:	383	427	0	0	578	35	0	0	0	11	77	6
Saturation Flow Module:												
Adjustment:	1.00	1.00	1.00	1.00	1.00	1.00	1.00	1.00	1.00	1.00	1.00	1.00
Lanes:	0.47	0.53	0.00	0.00	1.00	1.00	0.00	0.00	0.00	0.12	0.88	1.00
Final Sat.:	299	334	0	0	659	755	0	0	0	61	425	540
Capacity Analysis Module:												
Vol/Sat:	1.28	1.28	xxxx	xxxx	0.88	0.05	xxxx	xxxx	xxxx	0.18	0.18	0.01
Crit Moves:	****				****						****	
Delay/Veh:	156.7	157	0.0	0.0	34.3	7.7	0.0	0.0	0.0	11.6	11.6	9.3
Delay Adj:	1.00	1.00	1.00	1.00	1.00	1.00	1.00	1.00	1.00	1.00	1.00	1.00
AdjDel/Veh:	156.7	157	0.0	0.0	34.3	7.7	0.0	0.0	0.0	11.6	11.6	9.3
LOS by Move:	F	F	*	*	D	A	*	*	*	B	B	A
ApproachDel:	156.7			32.8			xxxxxx			11.4		
Delay Adj:	1.00			1.00			xxxxx			1.00		
ApprAdjDel:	156.7			32.8			xxxxxx			11.4		
LOS by Appr:	F			D			*			B		
AllWayAvgQ:	26.0	26.0	26.0	0.0	4.8	0.0	0.0	0.0	0.0	0.2	0.2	0.0

Overlook Parkway Extension
Ex Open + Alt4A
PM Peak Hour

Note: Queue reported is the number of cars per lane.

Overlook Parkway Extension
Ex Open + Alt4A
PM Peak Hour

Level Of Service Computation Report
2000 HCM 4-Way Stop Method (Future Volume Alternative)

Intersection #52 Madison St/Victoria Ave (South)

Cycle (sec): 100 | Critical Vol./Cap.(X): 1.547
Loss Time (sec): 0 (Y+R=4.0 sec) | Average Delay (sec/veh): 172.7
Optimal Cycle: 0 | Level Of Service: F

Street Name:	Madison St						Victoria Ave (South)					
Approach:	North Bound			South Bound			East Bound			West Bound		
Movement:	L	T	R	L	T	R	L	T	R	L	T	R
Control:	Stop Sign			Stop Sign			Stop Sign			Stop Sign		
Rights:	Include			Include			Include			Include		
Min. Green:	7	7	7	7	7	7	7	7	7	7	7	7
Lanes:	0 0	0 1	0	0 1	0 0	0	0 0	1! 0	0	0 0	0 0	0
Volume Module:												
Base Vol:	0	764	53	17	572	0	46	146	461	0	0	0
Growth Adj:	1.00	1.00	1.00	1.00	1.00	1.00	1.00	1.00	1.00	1.00	1.00	1.00
Initial Bse:	0	764	53	17	572	0	46	146	461	0	0	0
Added Vol:	0	0	0	0	0	0	0	0	0	0	0	0
PasserByVol:	0	0	0	0	0	0	0	0	0	0	0	0
Initial Fut:	0	764	53	17	572	0	46	146	461	0	0	0
User Adj:	1.00	1.00	1.00	1.00	1.00	1.00	1.00	1.00	1.00	1.00	1.00	1.00
PHF Adj:	1.00	1.00	1.00	1.00	1.00	1.00	1.00	1.00	1.00	1.00	1.00	1.00
PHF Volume:	0	764	53	17	572	0	46	146	461	0	0	0
Reduct Vol:	0	0	0	0	0	0	0	0	0	0	0	0
Reduced Vol:	0	764	53	17	572	0	46	146	461	0	0	0
PCE Adj:	1.00	1.00	1.00	1.00	1.00	1.00	1.00	1.00	1.00	1.00	1.00	1.00
MLF Adj:	1.00	1.00	1.00	1.00	1.00	1.00	1.00	1.00	1.00	1.00	1.00	1.00
FinalVolume:	0	764	53	17	572	0	46	146	461	0	0	0
Saturation Flow Module:												
Adjustment:	1.00	1.00	1.00	1.00	1.00	1.00	1.00	1.00	1.00	1.00	1.00	1.00
Lanes:	0.00	0.94	0.06	0.03	0.97	0.00	0.07	0.22	0.71	0.00	0.00	0.00
Final Sat.:	0	494	34	15	510	0	40	127	400	0	0	0
Capacity Analysis Module:												
Vol/Sat:	xxxx	1.55	1.55	1.12	1.12	xxxx	1.15	1.15	1.15	xxxx	xxxx	xxxx
Crit Moves:		****			****			****				
Delay/Veh:	0.0	273	273.3	102.1	102	0.0	110.5	111	110.5	0.0	0.0	0.0
Delay Adj:	1.00	1.00	1.00	1.00	1.00	1.00	1.00	1.00	1.00	1.00	1.00	1.00
AdjDel/Veh:	0.0	273	273.3	102.1	102	0.0	110.5	111	110.5	0.0	0.0	0.0
LOS by Move:	*	F	F	F	F	*	F	F	F	*	*	*
ApproachDel:	273.3			102.1			110.5			xxxxxx		
Delay Adj:	1.00			1.00			1.00			xxxxx		
ApprAdjDel:	273.3			102.1			110.5			xxxxxx		
LOS by Appr:	F			F			F			*		
AllWayAvgQ:	38.6	38.6	38.6	13.5	13.5	13.5	15.9	15.9	15.9	0.0	0.0	0.0

Overlook Parkway Extension
Ex Open + Alt4A
PM Peak Hour

Note: Queue reported is the number of cars per lane.

Overlook Parkway Extension
Ex Open + Alt4A
PM Peak Hour

Level Of Service Computation Report
2000 HCM 4-Way Stop Method (Future Volume Alternative)

Intersection #81 Washington St/Victoria Ave (North)

Cycle (sec):	100	Critical Vol./Cap.(X):	0.624
Loss Time (sec):	0 (Y+R=4.0 sec)	Average Delay (sec/veh):	14.5
Optimal Cycle:	0	Level Of Service:	B

Street Name:	Washington St						Victoria Ave (North)					
Approach:	North Bound			South Bound			East Bound			West Bound		
Movement:	L	T	R	L	T	R	L	T	R	L	T	R
Control:	Stop Sign			Stop Sign			Stop Sign			Stop Sign		
Rights:	Include			Include			Include			Include		
Min. Green:	7	7	7	7	7	7	7	7	7	7	7	7
Lanes:	0 1	1 0	0	0 0	0 1	0	0 0	0 0	0	1 0	0 1	0
Volume Module:												
Base Vol:	34	201	0	0	275	1	0	0	0	344	53	14
Growth Adj:	1.00	1.00	1.00	1.00	1.00	1.00	1.00	1.00	1.00	1.00	1.00	1.00
Initial Bse:	34	201	0	0	275	1	0	0	0	344	53	14
Added Vol:	0	0	0	0	0	0	0	0	0	0	0	0
PasserByVol:	0	0	0	0	0	0	0	0	0	0	0	0
Initial Fut:	34	201	0	0	275	1	0	0	0	344	53	14
User Adj:	1.00	1.00	1.00	1.00	1.00	1.00	1.00	1.00	1.00	1.00	1.00	1.00
PHF Adj:	1.00	1.00	1.00	1.00	1.00	1.00	1.00	1.00	1.00	1.00	1.00	1.00
PHF Volume:	34	201	0	0	275	1	0	0	0	344	53	14
Reduct Vol:	0	0	0	0	0	0	0	0	0	0	0	0
Reduced Vol:	34	201	0	0	275	1	0	0	0	344	53	14
PCE Adj:	1.00	1.00	1.00	1.00	1.00	1.00	1.00	1.00	1.00	1.00	1.00	1.00
MLF Adj:	1.00	1.00	1.00	1.00	1.00	1.00	1.00	1.00	1.00	1.00	1.00	1.00
FinalVolume:	34	201	0	0	275	1	0	0	0	344	53	14
Saturation Flow Module:												
Adjustment:	1.00	1.00	1.00	1.00	1.00	1.00	1.00	1.00	1.00	1.00	1.00	1.00
Lanes:	0.29	1.71	0.00	0.00	0.99	0.01	0.00	0.00	0.00	1.00	0.79	0.21
Final Sat.:	159	950	0	0	574	2	0	0	0	552	483	127
Capacity Analysis Module:												
Vol/Sat:	0.21	0.21	xxxx	xxxx	0.48	0.48	xxxx	xxxx	xxxx	0.62	0.11	0.11
Crit Moves:	****				****					****		
Delay/Veh:	10.6	10.5	0.0	0.0	14.2	14.2	0.0	0.0	0.0	18.5	9.1	9.1
Delay Adj:	1.00	1.00	1.00	1.00	1.00	1.00	1.00	1.00	1.00	1.00	1.00	1.00
AdjDel/Veh:	10.6	10.5	0.0	0.0	14.2	14.2	0.0	0.0	0.0	18.5	9.1	9.1
LOS by Move:	B	B	*	*	B	B	*	*	*	C	A	A
ApproachDel:	10.5				14.2		xxxxxx			17.0		
Delay Adj:	1.00				1.00		xxxxx			1.00		
ApprAdjDel:	10.5				14.2		xxxxxx			17.0		
LOS by Appr:	B				B		*			C		
AllWayAvgQ:	0.2	0.2	0.0	0.8	0.8	0.8	0.0	0.0	0.0	1.4	0.1	0.1

Overlook Parkway Extension
Ex Open + Alt4A
PM Peak Hour

Note: Queue reported is the number of cars per lane.

Overlook Parkway Extension
Ex Open + Alt4A
PM Peak Hour

Level Of Service Computation Report
2000 HCM 4-Way Stop Method (Future Volume Alternative)

Intersection #82 Washington St/Victoria Ave (South)

Cycle (sec):	100	Critical Vol./Cap.(X):	0.949
Loss Time (sec):	0 (Y+R=4.0 sec)	Average Delay (sec/veh):	28.4
Optimal Cycle:	0	Level Of Service:	D

Street Name:	Washington St							Victoria Ave (South)					
Approach:	North Bound			South Bound			East Bound			West Bound			
Movement:	L	- T	- R	L	- T	- R	L	- T	- R	L	- T	- R	
Control:	Stop Sign			Stop Sign			Stop Sign			Stop Sign			
Rights:	Include			Include			Include			Include			
Min. Green:	7	7	7	7	7	7	7	7	7	7	7	7	
Lanes:	0 0	2 0	1	0 1	0 0	0	0 1	0 0	1	0 0	0 0	0	
Volume Module:													
Base Vol:	0	234	183	2	617	0	1	82	103	0	0	0	
Growth Adj:	1.00	1.00	1.00	1.00	1.00	1.00	1.00	1.00	1.00	1.00	1.00	1.00	
Initial Bse:	0	234	183	2	617	0	1	82	103	0	0	0	
Added Vol:	0	0	0	0	0	0	0	0	0	0	0	0	
PasserByVol:	0	0	0	0	0	0	0	0	0	0	0	0	
Initial Fut:	0	234	183	2	617	0	1	82	103	0	0	0	
User Adj:	1.00	1.00	1.00	1.00	1.00	1.00	1.00	1.00	1.00	1.00	1.00	1.00	
PHF Adj:	1.00	1.00	1.00	1.00	1.00	1.00	1.00	1.00	1.00	1.00	1.00	1.00	
PHF Volume:	0	234	183	2	617	0	1	82	103	0	0	0	
Reduct Vol:	0	0	0	0	0	0	0	0	0	0	0	0	
Reduced Vol:	0	234	183	2	617	0	1	82	103	0	0	0	
PCE Adj:	1.00	1.00	1.00	1.00	1.00	1.00	1.00	1.00	1.00	1.00	1.00	1.00	
MLF Adj:	1.00	1.00	1.00	1.00	1.00	1.00	1.00	1.00	1.00	1.00	1.00	1.00	
FinalVolume:	0	234	183	2	617	0	1	82	103	0	0	0	
Saturation Flow Module:													
Adjustment:	1.00	1.00	1.00	1.00	1.00	1.00	1.00	1.00	1.00	1.00	1.00	1.00	
Lanes:	0.00	2.00	1.00	0.01	0.99	0.00	0.01	0.99	1.00	0.00	0.00	0.00	
Final Sat.:	0	1238	704	2	650	0	6	507	571	0	0	0	
Capacity Analysis Module:													
Vol/Sat:	xxxx	0.19	0.26	0.95	0.95	xxxx	0.16	0.16	0.18	xxxx	xxxx	xxxx	
Crit Moves:			****		****				****				
Delay/Veh:	0.0	9.7	9.4	46.5	46.5	0.0	10.7	10.7	10.1	0.0	0.0	0.0	
Delay Adj:	1.00	1.00	1.00	1.00	1.00	1.00	1.00	1.00	1.00	1.00	1.00	1.00	
AdjDel/Veh:	0.0	9.7	9.4	46.5	46.5	0.0	10.7	10.7	10.1	0.0	0.0	0.0	
LOS by Move:	*	A	A	E	E	*	B	B	B	*	*	*	
ApproachDel:		9.6			46.5			10.4			xxxxxx		
Delay Adj:		1.00			1.00			1.00			xxxxx		
ApprAdjDel:		9.6			46.5			10.4			xxxxxx		
LOS by Appr:		A			E			B			*		
AllWayAvgQ:	0.0	0.2	0.3	6.9	6.9	6.9	0.2	0.2	0.2	0.0	0.0	0.0	

Overlook Parkway Extension
Ex Open + Alt4A
PM Peak Hour

Note: Queue reported is the number of cars per lane.

Overlook Parkway Extension
Ex Open + Alt4A
PM Peak Hour

Level Of Service Computation Report
2000 HCM 4-Way Stop Method (Future Volume Alternative)

Intersection #221 Mary St/Victoria Ave (North)

Cycle (sec):	100	Critical Vol./Cap.(X):	0.592
Loss Time (sec):	0 (Y+R=4.0 sec)	Average Delay (sec/veh):	13.2
Optimal Cycle:	0	Level Of Service:	B

Street Name:	Mary St						Victoria Ave (North)					
Approach:	North Bound			South Bound			East Bound			West Bound		
Movement:	L	T	R	L	T	R	L	T	R	L	T	R
Control:	Stop Sign			Stop Sign			Stop Sign			Stop Sign		
Rights:	Include			Include			Include			Include		
Min. Green:	7	7	7	7	7	7	7	7	7	7	7	7
Lanes:	0 1	0	0 0	0	0 0	1 0	0	0	0 0 0	0	0 1!	0 0
Volume Module:												
Base Vol:	11	172	0	0	199	231	0	0	0	76	236	39
Growth Adj:	1.00	1.00	1.00	1.00	1.00	1.00	1.00	1.00	1.00	1.00	1.00	1.00
Initial Bse:	11	172	0	0	199	231	0	0	0	76	236	39
Added Vol:	0	0	0	0	0	0	0	0	0	0	0	0
PasserByVol:	0	0	0	0	0	0	0	0	0	0	0	0
Initial Fut:	11	172	0	0	199	231	0	0	0	76	236	39
User Adj:	1.00	1.00	1.00	1.00	1.00	1.00	1.00	1.00	1.00	1.00	1.00	1.00
PHF Adj:	1.00	1.00	1.00	1.00	1.00	1.00	1.00	1.00	1.00	1.00	1.00	1.00
PHF Volume:	11	172	0	0	199	231	0	0	0	76	236	39
Reduct Vol:	0	0	0	0	0	0	0	0	0	0	0	0
Reduced Vol:	11	172	0	0	199	231	0	0	0	76	236	39
PCE Adj:	1.00	1.00	1.00	1.00	1.00	1.00	1.00	1.00	1.00	1.00	1.00	1.00
MLF Adj:	1.00	1.00	1.00	1.00	1.00	1.00	1.00	1.00	1.00	1.00	1.00	1.00
FinalVolume:	11	172	0	0	199	231	0	0	0	76	236	39
Saturation Flow Module:												
Adjustment:	1.00	1.00	1.00	1.00	1.00	1.00	1.00	1.00	1.00	1.00	1.00	1.00
Lanes:	0.06	0.94	0.00	0.00	0.46	0.54	0.00	0.00	0.00	0.22	0.67	0.11
Final Sat.:	38	590	0	0	336	390	0	0	0	141	436	72
Capacity Analysis Module:												
Vol/Sat:	0.29	0.29	xxxx	xxxx	0.59	0.59	xxxx	xxxx	xxxx	0.54	0.54	0.54
Crit Moves:	****				****						****	
Delay/Veh:	10.4	10.4	0.0	0.0	14.0	14.0	0.0	0.0	0.0	13.8	13.8	13.8
Delay Adj:	1.00	1.00	1.00	1.00	1.00	1.00	1.00	1.00	1.00	1.00	1.00	1.00
AdjDel/Veh:	10.4	10.4	0.0	0.0	14.0	14.0	0.0	0.0	0.0	13.8	13.8	13.8
LOS by Move:	B	B	*	*	B	B	*	*	*	B	B	B
ApproachDel:	10.4			14.0			xxxxxx			13.8		
Delay Adj:	1.00			1.00			xxxxx			1.00		
ApprAdjDel:	10.4			14.0			xxxxxx			13.8		
LOS by Appr:	B			B			*			B		
AllWayAvgQ:	0.4	0.4	0.4	1.3	1.3	1.3	0.0	0.0	0.0	1.0	1.0	1.0

Overlook Parkway Extension
Ex Open + Alt4A
PM Peak Hour

Note: Queue reported is the number of cars per lane.

Overlook Parkway Extension
Ex Open + Alt4A
PM Peak Hour

Level Of Service Computation Report
2000 HCM 4-Way Stop Method (Future Volume Alternative)

Intersection #222 Mary St/Victoria Ave (South)

Cycle (sec):	100	Critical Vol./Cap.(X):	0.375
Loss Time (sec):	0 (Y+R=4.0 sec)	Average Delay (sec/veh):	9.9
Optimal Cycle:	0	Level Of Service:	A

Street Name:	Mary St						Victoria Ave (South)					
Approach:	North Bound			South Bound			East Bound			West Bound		
Movement:	L	- T	- R	L	- T	- R	L	- T	- R	L	- T	- R
Control:	Stop Sign			Stop Sign			Stop Sign			Stop Sign		
Rights:	Include			Include			Include			Include		
Min. Green:	7	7	7	7	7	7	7	7	7	7	7	7
Lanes:	0 0	0 1	0	0 1	0 0	0	1 0	0 1	0	0 0	0 0	0
Volume Module:												
Base Vol:	0	110	38	56	219	0	73	159	15	0	0	0
Growth Adj:	1.00	1.00	1.00	1.00	1.00	1.00	1.00	1.00	1.00	1.00	1.00	1.00
Initial Bse:	0	110	38	56	219	0	73	159	15	0	0	0
Added Vol:	0	0	0	0	0	0	0	0	0	0	0	0
PasserByVol:	0	0	0	0	0	0	0	0	0	0	0	0
Initial Fut:	0	110	38	56	219	0	73	159	15	0	0	0
User Adj:	1.00	1.00	1.00	1.00	1.00	1.00	1.00	1.00	1.00	1.00	1.00	1.00
PHF Adj:	1.00	1.00	1.00	1.00	1.00	1.00	1.00	1.00	1.00	1.00	1.00	1.00
PHF Volume:	0	110	38	56	219	0	73	159	15	0	0	0
Reduct Vol:	0	0	0	0	0	0	0	0	0	0	0	0
Reduced Vol:	0	110	38	56	219	0	73	159	15	0	0	0
PCE Adj:	1.00	1.00	1.00	1.00	1.00	1.00	1.00	1.00	1.00	1.00	1.00	1.00
MLF Adj:	1.00	1.00	1.00	1.00	1.00	1.00	1.00	1.00	1.00	1.00	1.00	1.00
FinalVolume:	0	110	38	56	219	0	73	159	15	0	0	0
Saturation Flow Module:												
Adjustment:	1.00	1.00	1.00	1.00	1.00	1.00	1.00	1.00	1.00	1.00	1.00	1.00
Lanes:	0.00	0.74	0.26	0.20	0.80	0.00	1.00	0.91	0.09	0.00	0.00	0.00
Final Sat.:	0	543	188	149	584	0	582	584	55	0	0	0
Capacity Analysis Module:												
Vol/Sat:	xxxx	0.20	0.20	0.37	0.37	xxxx	0.13	0.27	0.27	xxxx	xxxx	xxxx
Crit Moves:		****		****				****				
Delay/Veh:	0.0	8.9	8.9	10.5	10.5	0.0	9.5	10.0	10.0	0.0	0.0	0.0
Delay Adj:	1.00	1.00	1.00	1.00	1.00	1.00	1.00	1.00	1.00	1.00	1.00	1.00
AdjDel/Veh:	0.0	8.9	8.9	10.5	10.5	0.0	9.5	10.0	10.0	0.0	0.0	0.0
LOS by Move:	*	A	A	B	B	*	A	A	A	*	*	*
ApproachDel:		8.9		10.5				9.8		xxxxxx		
Delay Adj:		1.00		1.00				1.00		xxxxx		
ApprAdjDel:		8.9		10.5				9.8		xxxxxx		
LOS by Appr:		A		B				A		*		
AllWayAvgQ:	0.2	0.2	0.2	0.5	0.5	0.5	0.1	0.3	0.3	0.0	0.0	0.0

Overlook Parkway Extension
Ex Open + Alt4A
PM Peak Hour

Note: Queue reported is the number of cars per lane.

Traffix 7.9.0415 (c) 2007 Dowling Assoc. Licensed to MMA, LONG BEACH, CA

APPENDIX C:
TRAFFIX WORKSHEETS
2035 CONDITIONS – GATES CLOSED

Overlook Parkway Extension
Future Alt 1 (Gates Closed - No Overlook)
AM Peak Hour

Scenario Report

Scenario:	Future Alt 1 AM
Command:	Future Alt 1 AM
Volume:	Future Alt 1 AM
Geometry:	Future
Impact Fee:	Default Impact Fee
Trip Generation:	none
Trip Distribution:	none
Paths:	Default Path
Routes:	Default Route
Configuration:	Future Alt 1 AM

Traffix 7.9.0415 (c) 2007 Dowling Assoc. Licensed to MMA, LONG BEACH, CA

Overlook Parkway Extension
Future Alt 1 (Gates Closed - No Overlook)
AM Peak Hour

Impact Analysis Report
Level Of Service

Intersection	Base LOS	Base Del/ Veh	Base V/ C	Future LOS	Future Del/ Veh	Future V/ C	Change in
# 1 Madison St/SR-91 WB Ramps	C	31.7	0.742	C	31.7	0.742	+ 0.000 D/V
# 2 Madison St/SR-91 EB Ramps	D	37.5	0.848	D	37.5	0.848	+ 0.000 D/V
# 3 Madison St/Indiana Ave	F	103.3	1.247	F	103.3	1.247	+ 0.000 D/V
# 4 Madison St/Lincoln Ave	C	30.7	0.412	C	30.7	0.412	+ 0.000 D/V
# 6 Washington St/Indiana Ave	D	44.7	1.008	D	44.7	1.008	+ 0.000 D/V
# 7 Washington St/Lincoln Ave	F	226.4	1.969	F	226.4	1.969	+ 0.000 V/C
# 9 Washington St/Overlook Pkwy	B	16.1	0.797	B	16.1	0.797	+ 0.000 D/V
# 10 Riverside Ave-SR-91 WB/Arlingt	C	34.0	0.925	C	34.0	0.925	+ 0.000 D/V
# 11 Indiana Ave-SR-91 EB/Arlington	C	32.3	0.889	C	32.3	0.889	+ 0.000 D/V
# 12 Victoria Ave/Arlington Ave	F	83.5	1.141	F	83.5	1.141	+ 0.000 D/V
# 13 Alessandro Blvd/Arlington Ave	E	61.3	1.041	E	61.3	1.041	+ 0.000 D/V
# 14 Alessandro Blvd/Overlook Pkwy	E	69.4	1.187	E	69.4	1.187	+ 0.000 D/V
# 15 Alessandro Blvd/Trautwein Rd	D	38.2	0.885	D	38.2	0.885	+ 0.000 D/V
# 16 Crystal View Ter/Overlook Pkwy	A	6.9	0.007	A	6.9	0.007	+ 0.000 V/C
# 17 Kingdom Dr/Overlook Pkwy	A	8.9	0.000	A	8.9	0.000	+ 0.000 D/V
# 18 Kingdom Dr/Green Orchard Pl	A	8.6	0.000	A	8.6	0.000	+ 0.000 D/V
# 19 Trautwein Rd/John F. Kennedy D	F	85.0	1.097	F	85.0	1.097	+ 0.000 D/V
# 20 Washington St/Bradley St	C	34.4	0.912	C	34.4	0.912	+ 0.000 D/V
# 21 Alessandro Blvd/Via Vista Dr	C	34.0	0.915	C	34.0	0.915	+ 0.000 D/V
# 23 Mary St/Hawarden Dr	A	8.2	0.218	A	8.2	0.218	+ 0.000 V/C
# 24 Hawarden Dr/Overlook Pkwy	A	8.2	0.163	A	8.2	0.163	+ 0.000 V/C
# 25 Crystal View Ter/Berry Rd	A	7.5	0.233	A	7.5	0.233	+ 0.000 V/C
# 26 Corinthian Wy/Berry Rd	A	8.4	0.288	A	8.4	0.288	+ 0.000 V/C

Traffix 7.9.0415 (c) 2007 Dowling Assoc. Licensed to MMA, LONG BEACH, CA

Overlook Parkway Extension
Future Alt 1 (Gates Closed - No Overlook)
AM Peak Hour

Intersection	Base LOS	Base Del/Veh	Base V/C	Future LOS	Future Del/Veh	Future V/C	Change in
# 28 Orozco Dr/Overlook Pkwy	B	10.4	0.000	B	10.4	0.000	+ 0.000 D/V
# 51 Madison St/Victoria Ave (North	B	12.4	0.536	B	12.4	0.536	+ 0.000 V/C
# 52 Madison St/Victoria Ave (South	B	10.3	0.405	B	10.3	0.405	+ 0.000 V/C
# 81 Washington St/Victoria Ave (No	F	91.0	1.243	F	91.0	1.243	+ 0.000 V/C
# 82 Washington St/Victoria Ave (So	F	127.5	1.336	F	127.5	1.336	+ 0.000 V/C
#221 Mary St/Victoria Ave (North)	F	154.9	1.555	F	154.9	1.555	+ 0.000 V/C
#222 Mary St/Victoria Ave (South)	F	59.0	1.078	F	59.0	1.078	+ 0.000 V/C

Overlook Parkway Extension
Future Alt 1 (Gates Closed - No Overlook)
AM Peak Hour

Level Of Service Computation Report
2000 HCM Operations Method (Future Volume Alternative)

Intersection #1 Madison St/SR-91 WB Ramps

Cycle (sec): 100 Critical Vol./Cap.(X): 0.742
Loss Time (sec): 12 (Y+R=4.0 sec) Average Delay (sec/veh): 31.7
Optimal Cycle: 66 Level Of Service: C

Street Name:	Madison St						SR-91 WB Ramps					
Approach:	North Bound			South Bound			East Bound			West Bound		
Movement:	L -	T -	R	L -	T -	R	L -	T -	R	L -	T -	R
Control:	Protected			Protected			Split Phase			Split Phase		
Rights:	Include			Include			Include			Include		
Min. Green:	7	7	7	7	7	7	7	7	7	7	7	7
Lanes:	1 0	2 0	0	0 0	3 0	1	0 0	0 0	0	0 1	0 0	1
Volume Module:												
Base Vol:	431	1086	0	0	830	188	0	0	0	434	1	220
Growth Adj:	1.00	1.00	1.00	1.00	1.00	1.00	1.00	1.00	1.00	1.00	1.00	1.00
Initial Bse:	431	1086	0	0	830	188	0	0	0	434	1	220
Added Vol:	0	0	0	0	0	0	0	0	0	0	0	0
PasserByVol:	0	0	0	0	0	0	0	0	0	0	0	0
Initial Fut:	431	1086	0	0	830	188	0	0	0	434	1	220
User Adj:	1.00	1.00	1.00	1.00	1.00	1.00	1.00	1.00	1.00	1.00	1.00	1.00
PHF Adj:	1.00	1.00	1.00	1.00	1.00	1.00	1.00	1.00	1.00	1.00	1.00	1.00
PHF Volume:	431	1086	0	0	830	188	0	0	0	434	1	220
Reduct Vol:	0	0	0	0	0	0	0	0	0	0	0	0
Reduced Vol:	431	1086	0	0	830	188	0	0	0	434	1	220
PCE Adj:	1.00	1.00	1.00	1.00	1.00	1.00	1.00	1.00	1.00	1.00	1.00	1.00
MLF Adj:	1.00	1.00	1.00	1.00	1.00	1.00	1.00	1.00	1.00	1.00	1.00	1.00
FinalVolume:	431	1086	0	0	830	188	0	0	0	434	1	220
Saturation Flow Module:												
Sat/Lane:	1900	1900	1900	1900	1900	1900	1900	1900	1900	1900	1900	1900
Adjustment:	0.95	0.95	1.00	1.00	0.91	0.85	1.00	1.00	1.00	0.90	0.90	0.85
Lanes:	1.00	2.00	0.00	0.00	3.00	1.00	0.00	0.00	0.00	0.99	0.01	1.00
Final Sat.:	1805	3610	0	0	5187	1615	0	0	0	1708	4	1615
Capacity Analysis Module:												
Vol/Sat:	0.24	0.30	0.00	0.00	0.16	0.12	0.00	0.00	0.00	0.25	0.25	0.14
Crit Moves:	****				****						****	
Green/Cycle:	0.32	0.44	0.00	0.00	0.22	0.22	0.00	0.00	0.00	0.34	0.34	0.34
Volume/Cap:	0.74	0.69	0.00	0.00	0.74	0.54	0.00	0.00	0.00	0.74	0.74	0.40
Delay/Veh:	35.3	24.1	0.0	0.0	39.3	36.5	0.0	0.0	0.0	34.0	34.0	25.5
User DelAdj:	1.00	1.00	1.00	1.00	1.00	1.00	1.00	1.00	1.00	1.00	1.00	1.00
AdjDel/Veh:	35.3	24.1	0.0	0.0	39.3	36.5	0.0	0.0	0.0	34.0	34.0	25.5
LOS by Move:	D	C	A	A	D	D	A	A	A	C	C	C
HCM2kAvgQ:	13	15	0	0	10	6	0	0	0	13	13	5

Note: Queue reported is the number of cars per lane.

Overlook Parkway Extension
Future Alt 1 (Gates Closed - No Overlook)
AM Peak Hour

Level Of Service Computation Report
2000 HCM Operations Method (Future Volume Alternative)

Intersection #2 Madison St/SR-91 EB Ramps

Cycle (sec):	100	Critical Vol./Cap.(X):	0.848
Loss Time (sec):	12 (Y+R=4.0 sec)	Average Delay (sec/veh):	37.5
Optimal Cycle:	90	Level Of Service:	D

Street Name:	Madison St								SR-91 EB Ramps					
Approach:	North Bound			South Bound			East Bound			West Bound				
Movement:	L	T	R	L	T	R	L	T	R	L	T	R		
Control:	Protected			Protected			Protected			Protected				
Rights:	Include			Include			Include			Include				
Min. Green:	7	7	7	7	7	7	7	7	7	7	7	7		
Lanes:	0 0	3 0	1	1 0	2 0	0	0 1	0 0	1	0 0	0 0	0		
Volume Module:														
Base Vol:	0	1259	292	151	1177	0	301	12	678	0	0	0		
Growth Adj:	1.00	1.00	1.00	1.00	1.00	1.00	1.00	1.00	1.00	1.00	1.00	1.00		
Initial Bse:	0	1259	292	151	1177	0	301	12	678	0	0	0		
Added Vol:	0	0	0	0	0	0	0	0	0	0	0	0		
PasserByVol:	0	0	0	0	0	0	0	0	0	0	0	0		
Initial Fut:	0	1259	292	151	1177	0	301	12	678	0	0	0		
User Adj:	1.00	1.00	1.00	1.00	1.00	1.00	1.00	1.00	1.00	1.00	1.00	1.00		
PHF Adj:	1.00	1.00	1.00	1.00	1.00	1.00	1.00	1.00	1.00	1.00	1.00	1.00		
PHF Volume:	0	1259	292	151	1177	0	301	12	678	0	0	0		
Reduct Vol:	0	0	0	0	0	0	0	0	0	0	0	0		
Reduced Vol:	0	1259	292	151	1177	0	301	12	678	0	0	0		
PCE Adj:	1.00	1.00	1.00	1.00	1.00	1.00	1.00	1.00	1.00	1.00	1.00	1.00		
MLF Adj:	1.00	1.00	1.00	1.00	1.00	1.00	1.00	1.00	1.00	1.00	1.00	1.00		
FinalVolume:	0	1259	292	151	1177	0	301	12	678	0	0	0		
Saturation Flow Module:														
Sat/Lane:	1900	1900	1900	1900	1900	1900	1900	1900	1900	1900	1900	1900		
Adjustment:	1.00	0.91	0.85	0.95	0.95	1.00	0.95	0.95	0.85	1.00	1.00	1.00		
Lanes:	0.00	3.00	1.00	1.00	2.00	0.00	0.96	0.04	1.00	0.00	0.00	0.00		
Final Sat.:	0	5187	1615	1805	3610	0	1743	69	1615	0	0	0		
Capacity Analysis Module:														
Vol/Sat:	0.00	0.24	0.18	0.08	0.33	0.00	0.17	0.17	0.42	0.00	0.00	0.00		
Crit Moves:	****				****				****					
Green/Cycle:	0.00	0.32	0.32	0.11	0.35	0.00	0.37	0.46	0.46	0.00	0.00	0.00		
Volume/Cap:	0.00	0.77	0.57	0.77	0.92	0.00	0.46	0.38	0.92	0.00	0.00	0.00		
Delay/Veh:	0.0	33.2	30.2	60.2	41.9	0.0	24.2	18.2	42.4	0.0	0.0	0.0		
User DelAdj:	1.00	1.00	1.00	1.00	1.00	1.00	1.00	1.00	1.00	1.00	1.00	1.00		
AdjDel/Veh:	0.0	33.2	30.2	60.2	41.9	0.0	24.2	18.2	42.4	0.0	0.0	0.0		
LOS by Move:	A	C	C	E	D	A	C	B	D	A	A	A		
HCM2kAvgQ:	0	14	8	6	23	0	7	6	24	0	0	0		

Note: Queue reported is the number of cars per lane.

Traffix 7.9.0415 (c) 2007 Dowling Assoc. Licensed to MMA, LONG BEACH, CA

Overlook Parkway Extension
Future Alt 1 (Gates Closed - No Overlook)
AM Peak Hour

Level Of Service Computation Report
2000 HCM Operations Method (Future Volume Alternative)

Intersection #3 Madison St/Indiana Ave

Cycle (sec):	100	Critical Vol./Cap.(X):	1.247
Loss Time (sec):	16 (Y+R=4.0 sec)	Average Delay (sec/veh):	103.3
Optimal Cycle:	130	Level Of Service:	F

Street Name:	Madison St								Indiana Ave					
Approach:	North Bound			South Bound			East Bound			West Bound				
Movement:	L	T	R	L	T	R	L	T	R	L	T	R		
Control:	Protected			Protected			Protected			Protected				
Rights:	Include			Include			Include			Include				
Min. Green:	7	7	7	7	7	7	7	7	7	7	7	7		
Lanes:	1 0	1 1	0	1 0	1 1	0	1 0	1 1	0	1 0	1 1	0		
Volume Module:														
Base Vol:	76	791	29	750	594	406	251	703	27	19	343	438		
Growth Adj:	1.00	1.00	1.00	1.00	1.00	1.00	1.00	1.00	1.00	1.00	1.00	1.00		
Initial Bse:	76	791	29	750	594	406	251	703	27	19	343	438		
Added Vol:	0	0	0	0	0	0	0	0	0	0	0	0		
PasserByVol:	0	0	0	0	0	0	0	0	0	0	0	0		
Initial Fut:	76	791	29	750	594	406	251	703	27	19	343	438		
User Adj:	1.00	1.00	1.00	1.00	1.00	1.00	1.00	1.00	1.00	1.00	1.00	1.00		
PHF Adj:	1.00	1.00	1.00	1.00	1.00	1.00	1.00	1.00	1.00	1.00	1.00	1.00		
PHF Volume:	76	791	29	750	594	406	251	703	27	19	343	438		
Reduct Vol:	0	0	0	0	0	0	0	0	0	0	0	0		
Reduced Vol:	76	791	29	750	594	406	251	703	27	19	343	438		
PCE Adj:	1.00	1.00	1.00	1.00	1.00	1.00	1.00	1.00	1.00	1.00	1.00	1.00		
MLF Adj:	1.00	1.00	1.00	1.00	1.00	1.00	1.00	1.00	1.00	1.00	1.00	1.00		
FinalVolume:	76	791	29	750	594	406	251	703	27	19	343	438		
Saturation Flow Module:														
Sat/Lane:	1900	1900	1900	1900	1900	1900	1900	1900	1900	1900	1900	1900		
Adjustment:	0.95	0.95	0.95	0.95	0.89	0.89	0.95	0.94	0.94	0.95	0.87	0.87		
Lanes:	1.00	1.93	0.07	1.00	1.19	0.81	1.00	1.93	0.07	1.00	1.00	1.00		
Final Sat.:	1805	3465	127	1805	2014	1376	1805	3456	133	1805	1653	1653		
Capacity Analysis Module:														
Vol/Sat:	0.04	0.23	0.23	0.42	0.30	0.30	0.14	0.20	0.20	0.01	0.21	0.26		
Crit Moves:		****		****			****					****		
Green/Cycle:	0.10	0.18	0.18	0.33	0.42	0.42	0.11	0.24	0.24	0.08	0.21	0.21		
Volume/Cap:	0.43	1.25	1.25	1.25	0.71	0.71	1.25	0.84	0.84	0.13	0.98	1.25		
Delay/Veh:	44.0	165	164.6	158.1	25.8	25.8	190.2	43.8	43.8	42.9	65.2	163.7		
User DelAdj:	1.00	1.00	1.00	1.00	1.00	1.00	1.00	1.00	1.00	1.00	1.00	1.00		
AdjDel/Veh:	44.0	165	164.6	158.1	25.8	25.8	190.2	43.8	43.8	42.9	65.2	163.7		
LOS by Move:	D	F	F	F	C	C	F	D	D	D	E	F		
HCM2kAvgQ:	3	26	26	44	14	14	16	14	14	1	16	28		

Note: Queue reported is the number of cars per lane.

Traffix 7.9.0415 (c) 2007 Dowling Assoc. Licensed to MMA, LONG BEACH, CA

Overlook Parkway Extension
Future Alt 1 (Gates Closed - No Overlook)
AM Peak Hour

Level Of Service Computation Report
2000 HCM Operations Method (Future Volume Alternative)

Intersection #4 Madison St/Lincoln Ave

Cycle (sec):	100	Critical Vol./Cap.(X):	0.412
Loss Time (sec):	16 (Y+R=4.0 sec)	Average Delay (sec/veh):	30.7
Optimal Cycle:	50	Level Of Service:	C

Street Name:	Madison St						Lincoln Ave					
Approach:	North Bound			South Bound			East Bound			West Bound		
Movement:	L -	T -	R	L -	T -	R	L -	T -	R	L -	T -	R
Control:	Protected			Protected			Protected			Protected		
Rights:	Include			Include			Include			Include		
Min. Green:	7	7	7	7	7	7	7	7	7	7	7	7
Lanes:	1 0	1 1	0	1 0	1 1	0	1 0	0 1	0	1 0	1 1	0
Volume Module:												
Base Vol:	59	497	25	61	219	157	174	279	27	6	264	101
Growth Adj:	1.00	1.00	1.00	1.00	1.00	1.00	1.00	1.00	1.00	1.00	1.00	1.00
Initial Bse:	59	497	25	61	219	157	174	279	27	6	264	101
Added Vol:	0	0	0	0	0	0	0	0	0	0	0	0
PasserByVol:	0	0	0	0	0	0	0	0	0	0	0	0
Initial Fut:	59	497	25	61	219	157	174	279	27	6	264	101
User Adj:	1.00	1.00	1.00	1.00	1.00	1.00	1.00	1.00	1.00	1.00	1.00	1.00
PHF Adj:	1.00	1.00	1.00	1.00	1.00	1.00	1.00	1.00	1.00	1.00	1.00	1.00
PHF Volume:	59	497	25	61	219	157	174	279	27	6	264	101
Reduct Vol:	0	0	0	0	0	0	0	0	0	0	0	0
Reduced Vol:	59	497	25	61	219	157	174	279	27	6	264	101
PCE Adj:	1.00	1.00	1.00	1.00	1.00	1.00	1.00	1.00	1.00	1.00	1.00	1.00
MLF Adj:	1.00	1.00	1.00	1.00	1.00	1.00	1.00	1.00	1.00	1.00	1.00	1.00
FinalVolume:	59	497	25	61	219	157	174	279	27	6	264	101
Saturation Flow Module:												
Sat/Lane:	1900	1900	1900	1900	1900	1900	1900	1900	1900	1900	1900	1900
Adjustment:	0.95	0.94	0.94	0.95	0.89	0.89	0.95	0.99	0.99	0.95	0.91	0.91
Lanes:	1.00	1.90	0.10	1.00	1.16	0.84	1.00	0.91	0.09	1.00	1.45	0.55
Final Sat.:	1805	3413	172	1805	1970	1412	1805	1710	165	1805	2501	957
Capacity Analysis Module:												
Vol/Sat:	0.03	0.15	0.15	0.03	0.11	0.11	0.10	0.16	0.16	0.00	0.11	0.11
Crit Moves:		****		****				****		****		
Green/Cycle:	0.16	0.33	0.33	0.08	0.25	0.25	0.21	0.37	0.37	0.07	0.23	0.23
Volume/Cap:	0.21	0.44	0.44	0.44	0.45	0.45	0.46	0.44	0.44	0.05	0.46	0.46
Delay/Veh:	37.2	26.8	26.8	46.5	32.2	32.2	35.6	24.4	24.4	43.5	33.7	33.7
User DelAdj:	1.00	1.00	1.00	1.00	1.00	1.00	1.00	1.00	1.00	1.00	1.00	1.00
AdjDel/Veh:	37.2	26.8	26.8	46.5	32.2	32.2	35.6	24.4	24.4	43.5	33.7	33.7
LOS by Move:	D	C	C	D	C	C	D	C	C	D	C	C
HCM2kAvgQ:	2	7	7	2	5	5	5	7	7	0	5	5

Note: Queue reported is the number of cars per lane.

Traffix 7.9.0415 (c) 2007 Dowling Assoc. Licensed to MMA, LONG BEACH, CA

Overlook Parkway Extension
Future Alt 1 (Gates Closed - No Overlook)
AM Peak Hour

Level Of Service Computation Report
2000 HCM Operations Method (Future Volume Alternative)

Intersection #6 Washington St/Indiana Ave

Cycle (sec):	100	Critical Vol./Cap.(X):	1.008
Loss Time (sec):	12 (Y+R=4.0 sec)	Average Delay (sec/veh):	44.7
Optimal Cycle:	130	Level Of Service:	D

Street Name:	Washington St						Indiana Ave					
Approach:	North Bound			South Bound			East Bound			West Bound		
Movement:	L -	T -	R	L -	T -	R	L -	T -	R	L -	T -	R
Control:	Permitted			Permitted			Protected			Protected		
Rights:	Ovl			Include			Include			Include		
Min. Green:	7	7	7	7	7	7	7	7	7	7	7	7
Lanes:	1 0	0 1	0	1 0	0 1	0	1 0	1 1	0	1 0	1 1	0
Volume Module:												
Base Vol:	250	2	586	2	1	1	6	1322	158	192	617	15
Growth Adj:	1.00	1.00	1.00	1.00	1.00	1.00	1.00	1.00	1.00	1.00	1.00	1.00
Initial Bse:	250	2	586	2	1	1	6	1322	158	192	617	15
Added Vol:	0	0	0	0	0	0	0	0	0	0	0	0
PasserByVol:	0	0	0	0	0	0	0	0	0	0	0	0
Initial Fut:	250	2	586	2	1	1	6	1322	158	192	617	15
User Adj:	1.00	1.00	1.00	1.00	1.00	1.00	1.00	1.00	1.00	1.00	1.00	1.00
PHF Adj:	1.00	1.00	1.00	1.00	1.00	1.00	1.00	1.00	1.00	1.00	1.00	1.00
PHF Volume:	250	2	586	2	1	1	6	1322	158	192	617	15
Reduct Vol:	0	0	0	0	0	0	0	0	0	0	0	0
Reduced Vol:	250	2	586	2	1	1	6	1322	158	192	617	15
PCE Adj:	1.00	1.00	1.00	1.00	1.00	1.00	1.00	1.00	1.00	1.00	1.00	1.00
MLF Adj:	1.00	1.00	1.00	1.00	1.00	1.00	1.00	1.00	1.00	1.00	1.00	1.00
FinalVolume:	250	2	586	2	1	1	6	1322	158	192	617	15
Saturation Flow Module:												
Sat/Lane:	1900	1900	1900	1900	1900	1900	1900	1900	1900	1900	1900	1900
Adjustment:	0.77	0.85	0.85	0.11	0.93	0.93	0.95	0.93	0.93	0.95	0.95	0.95
Lanes:	1.00	0.01	0.99	1.00	0.50	0.50	1.00	1.79	0.21	1.00	1.95	0.05
Final Sat.:	1457	5	1610	211	879	879	1805	3173	379	1805	3510	85
Capacity Analysis Module:												
Vol/Sat:	0.17	0.36	0.36	0.01	0.00	0.00	0.00	0.42	0.42	0.11	0.18	0.18
Crit Moves:		****						****		****		
Green/Cycle:	0.36	0.36	0.47	0.36	0.36	0.36	0.15	0.41	0.41	0.11	0.37	0.37
Volume/Cap:	0.47	1.01	0.78	0.03	0.00	0.00	0.02	1.01	1.01	1.01	0.47	0.47
Delay/Veh:	25.3	71.2	27.6	20.7	20.4	20.4	36.5	54.8	54.8	112.0	24.3	24.3
User DelAdj:	1.00	1.00	1.00	1.00	1.00	1.00	1.00	1.00	1.00	1.00	1.00	1.00
AdjDel/Veh:	25.3	71.2	27.6	20.7	20.4	20.4	36.5	54.8	54.8	112.0	24.3	24.3
LOS by Move:	C	E	C	C	C	C	D	D	D	F	C	C
HCM2kAvgQ:	6	25	17	0	0	0	0	32	32	10	8	8

Note: Queue reported is the number of cars per lane.

Traffix 7.9.0415 (c) 2007 Dowling Assoc. Licensed to MMA, LONG BEACH, CA

Overlook Parkway Extension
Future Alt 1 (Gates Closed - No Overlook)
AM Peak Hour

Level Of Service Computation Report
2000 HCM 4-Way Stop Method (Future Volume Alternative)

Intersection #7 Washington St/Lincoln Ave

Cycle (sec): 100 | Critical Vol./Cap.(X): 1.969
Loss Time (sec): 0 (Y+R=4.0 sec) | Average Delay (sec/veh): 226.4
Optimal Cycle: 0 | Level Of Service: F

Street Name:	Washington St						Lincoln Ave					
Approach:	North Bound			South Bound			East Bound			West Bound		
Movement:	L -	T -	R	L -	T -	R	L -	T -	R	L -	T -	R
Control:	Stop Sign			Stop Sign			Stop Sign			Stop Sign		
Rights:	Include			Include			Include			Include		
Min. Green:	7	7	7	7	7	7	7	7	7	7	7	7
Lanes:	0 0	1! 0	0	0 0	1! 0	0	0 0	1! 0	0	0 1	0 0	1
Volume Module:												
Base Vol:	26	758	68	71	271	33	11	359	9	63	270	48
Growth Adj:	1.00	1.00	1.00	1.00	1.00	1.00	1.00	1.00	1.00	1.00	1.00	1.00
Initial Bse:	26	758	68	71	271	33	11	359	9	63	270	48
Added Vol:	0	0	0	0	0	0	0	0	0	0	0	0
PasserByVol:	0	0	0	0	0	0	0	0	0	0	0	0
Initial Fut:	26	758	68	71	271	33	11	359	9	63	270	48
User Adj:	1.00	1.00	1.00	1.00	1.00	1.00	1.00	1.00	1.00	1.00	1.00	1.00
PHF Adj:	1.00	1.00	1.00	1.00	1.00	1.00	1.00	1.00	1.00	1.00	1.00	1.00
PHF Volume:	26	758	68	71	271	33	11	359	9	63	270	48
Reduct Vol:	0	0	0	0	0	0	0	0	0	0	0	0
Reduced Vol:	26	758	68	71	271	33	11	359	9	63	270	48
PCE Adj:	1.00	1.00	1.00	1.00	1.00	1.00	1.00	1.00	1.00	1.00	1.00	1.00
MLF Adj:	1.00	1.00	1.00	1.00	1.00	1.00	1.00	1.00	1.00	1.00	1.00	1.00
FinalVolume:	26	758	68	71	271	33	11	359	9	63	270	48
Saturation Flow Module:												
Adjustment:	1.00	1.00	1.00	1.00	1.00	1.00	1.00	1.00	1.00	1.00	1.00	1.00
Lanes:	0.03	0.89	0.08	0.19	0.72	0.09	0.03	0.95	0.02	0.19	0.81	1.00
Final Sat.:	13	385	35	79	300	36	12	390	10	74	318	430
Capacity Analysis Module:												
Vol/Sat:	1.97	1.97	1.97	0.90	0.90	0.90	0.92	0.92	0.92	0.85	0.85	0.11
Crit Moves:	****			****					****		****	
Delay/Veh:	463.8	464	463.8	50.8	50.8	50.8	54.3	54.3	54.3	43.3	43.3	11.9
Delay Adj:	1.00	1.00	1.00	1.00	1.00	1.00	1.00	1.00	1.00	1.00	1.00	1.00
AdjDel/Veh:	463.8	464	463.8	50.8	50.8	50.8	54.3	54.3	54.3	43.3	43.3	11.9
LOS by Move:	F	F	F	F	F	F	F	F	F	E	E	B
ApproachDel:	463.8			50.8			54.3			39.3		
Delay Adj:	1.00			1.00			1.00			1.00		
ApprAdjDel:	463.8			50.8			54.3			39.3		
LOS by Appr:	F			F			F			E		
AllWayAvgQ:	54.4	54.4	54.4	4.5	4.5	4.5	4.9	4.9	4.9	3.4	3.4	0.1

Overlook Parkway Extension
Future Alt 1 (Gates Closed - No Overlook)
AM Peak Hour

Note: Queue reported is the number of cars per lane.

Overlook Parkway Extension
Future Alt 1 (Gates Closed - No Overlook)
AM Peak Hour

Level Of Service Computation Report
2000 HCM Operations Method (Future Volume Alternative)

Intersection #9 Washington St/Overlook Pkwy

Cycle (sec): 100 | Critical Vol./Cap.(X): 0.797
Loss Time (sec): 12 (Y+R=4.0 sec) | Average Delay (sec/veh): 16.1
Optimal Cycle: 76 | Level Of Service: B

Street Name:	Washington St						Overlook Pkwy					
Approach:	North Bound			South Bound			East Bound			West Bound		
Movement:	L - T - R			L - T - R			L - T - R			L - T - R		
Control:	Protected			Protected			Protected			Protected		
Rights:	Include			Include			Include			Ovl		
Min. Green:	7	7	7	7	7	7	7	7	7	7	7	7
Lanes:	0 0	1 1	0	1 0	2 0	0	0 0	0 0	0	1 0	0 0	1
Volume Module:												
Base Vol:	0	2203	27	112	726	0	0	0	0	37	0	167
Growth Adj:	1.00	1.00	1.00	1.00	1.00	1.00	1.00	1.00	1.00	1.00	1.00	1.00
Initial Bse:	0	2203	27	112	726	0	0	0	0	37	0	167
Added Vol:	0	0	0	0	0	0	0	0	0	0	0	0
PasserByVol:	0	0	0	0	0	0	0	0	0	0	0	0
Initial Fut:	0	2203	27	112	726	0	0	0	0	37	0	167
User Adj:	1.00	1.00	1.00	1.00	1.00	1.00	1.00	1.00	1.00	1.00	1.00	1.00
PHF Adj:	1.00	1.00	1.00	1.00	1.00	1.00	1.00	1.00	1.00	1.00	1.00	1.00
PHF Volume:	0	2203	27	112	726	0	0	0	0	37	0	167
Reduct Vol:	0	0	0	0	0	0	0	0	0	0	0	0
Reduced Vol:	0	2203	27	112	726	0	0	0	0	37	0	167
PCE Adj:	1.00	1.00	1.00	1.00	1.00	1.00	1.00	1.00	1.00	1.00	1.00	1.00
MLF Adj:	1.00	1.00	1.00	1.00	1.00	1.00	1.00	1.00	1.00	1.00	1.00	1.00
FinalVolume:	0	2203	27	112	726	0	0	0	0	37	0	167
Saturation Flow Module:												
Sat/Lane:	1900	1900	1900	1900	1900	1900	1900	1900	1900	1900	1900	1900
Adjustment:	1.00	0.95	0.95	0.95	0.95	1.00	1.00	1.00	1.00	0.95	1.00	0.85
Lanes:	0.00	1.98	0.02	1.00	2.00	0.00	0.00	0.00	0.00	1.00	0.00	1.00
Final Sat.:	0	3559	44	1805	3610	0	0	0	0	1805	0	1615
Capacity Analysis Module:												
Vol/Sat:	0.00	0.62	0.62	0.06	0.20	0.00	0.00	0.00	0.00	0.02	0.00	0.10
Crit Moves:		****		****						****		
Green/Cycle:	0.00	0.74	0.74	0.07	0.60	0.00	0.00	0.00	0.00	0.07	0.00	0.14
Volume/Cap:	0.00	0.84	0.84	0.84	0.33	0.00	0.00	0.00	0.00	0.29	0.00	0.72
Delay/Veh:	0.0	11.7	11.7	81.3	10.1	0.0	0.0	0.0	0.0	45.4	0.0	51.3
User DelAdj:	1.00	1.00	1.00	1.00	1.00	1.00	1.00	1.00	1.00	1.00	1.00	1.00
AdjDel/Veh:	0.0	11.7	11.7	81.3	10.1	0.0	0.0	0.0	0.0	45.4	0.0	51.3
LOS by Move:	A	B	B	F	B	A	A	A	A	D	A	D
HCM2kAvgQ:	0	27	27	6	6	0	0	0	0	1	0	6

Note: Queue reported is the number of cars per lane.

Traffix 7.9.0415 (c) 2007 Dowling Assoc. Licensed to MMA, LONG BEACH, CA

Overlook Parkway Extension
Future Alt 1 (Gates Closed - No Overlook)
AM Peak Hour

Level Of Service Computation Report
2000 HCM Operations Method (Future Volume Alternative)

Intersection #10 Riverside Ave-SR-91 WB/Arlington Ave

Cycle (sec): 100 | Critical Vol./Cap.(X): 0.925
Loss Time (sec): 12 (Y+R=4.0 sec) | Average Delay (sec/veh): 34.0
Optimal Cycle: 123 | Level Of Service: C

Street Name:	Riverside Ave-SR-91 WB						Arlington Ave					
Approach:	North Bound			South Bound			East Bound			West Bound		
Movement:	L - T - R			L - T - R			L - T - R			L - T - R		
Control:	Protected			Protected			Protected			Protected		
Rights:	Include			Ovl			Ignore			Ignore		
Min. Green:	7	7	7	7	7	7	7	7	7	7	7	7
Lanes:	0 0	0 0	0	1 1	0 0	1	1 0	3 0	1	1 0	3 0	1
Volume Module:												
Base Vol:	0	0	0	571	37	539	75	1223	143	517	1262	248
Growth Adj:	1.00	1.00	1.00	1.00	1.00	1.00	1.00	1.00	1.00	1.00	1.00	1.00
Initial Bse:	0	0	0	571	37	539	75	1223	143	517	1262	248
Added Vol:	0	0	0	0	0	0	0	0	0	0	0	0
PasserByVol:	0	0	0	0	0	0	0	0	0	0	0	0
Initial Fut:	0	0	0	571	37	539	75	1223	143	517	1262	248
User Adj:	1.00	1.00	1.00	1.00	1.00	1.00	1.00	1.00	0.00	1.00	1.00	0.00
PHF Adj:	1.00	1.00	1.00	1.00	1.00	1.00	1.00	1.00	0.00	1.00	1.00	0.00
PHF Volume:	0	0	0	571	37	539	75	1223	0	517	1262	0
Reduct Vol:	0	0	0	0	0	0	0	0	0	0	0	0
Reduced Vol:	0	0	0	571	37	539	75	1223	0	517	1262	0
PCE Adj:	1.00	1.00	1.00	1.00	1.00	1.00	1.00	1.00	0.00	1.00	1.00	0.00
MLF Adj:	1.00	1.00	1.00	1.00	1.00	1.00	1.00	1.00	0.00	1.00	1.00	0.00
FinalVolume:	0	0	0	571	37	539	75	1223	0	517	1262	0
Saturation Flow Module:												
Sat/Lane:	1900	1900	1900	1900	1900	1900	1900	1900	1900	1900	1900	1900
Adjustment:	1.00	1.00	1.00	0.93	0.93	0.85	0.95	0.91	1.00	0.95	0.91	1.00
Lanes:	0.00	0.00	0.00	1.88	0.12	1.00	1.00	3.00	1.00	1.00	3.00	1.00
Final Sat.:	0	0	0	3301	214	1615	1805	5187	1900	1805	5187	1900
Capacity Analysis Module:												
Vol/Sat:	0.00	0.00	0.00	0.17	0.17	0.33	0.04	0.24	0.00	0.29	0.24	0.00
Crit Moves:						****		****		****		
Green/Cycle:	0.00	0.00	0.00	0.26	0.30	0.43	0.13	0.26	0.00	0.32	0.45	0.00
Volume/Cap:	0.00	0.00	0.00	0.67	0.59	0.78	0.32	0.89	0.00	0.89	0.54	0.00
Delay/Veh:	0.0	0.0	0.0	35.0	30.9	30.6	40.2	43.3	0.0	48.5	19.9	0.0
User DelAdj:	1.00	1.00	1.00	1.00	1.00	1.00	1.00	1.00	1.00	1.00	1.00	1.00
AdjDel/Veh:	0.0	0.0	0.0	35.0	30.9	30.6	40.2	43.3	0.0	48.5	19.9	0.0
LOS by Move:	A	A	A	C	C	C	D	D	A	D	B	A
HCM2kAvgQ:	0	0	0	9	9	16	2	17	0	19	10	0

Note: Queue reported is the number of cars per lane.

Traffix 7.9.0415 (c) 2007 Dowling Assoc. Licensed to MMA, LONG BEACH, CA

Overlook Parkway Extension
Future Alt 1 (Gates Closed - No Overlook)
AM Peak Hour

Level Of Service Computation Report
2000 HCM Operations Method (Future Volume Alternative)

Intersection #11 Indiana Ave-SR-91 EB/Arlington Ave

Cycle (sec): 100 | Critical Vol./Cap.(X): 0.889
Loss Time (sec): 12 (Y+R=4.0 sec) | Average Delay (sec/veh): 32.3
Optimal Cycle: 105 | Level Of Service: C

Street Name:	Indiana Ave-SR-91 EB						Arlington Ave					
Approach:	North Bound			South Bound			East Bound			West Bound		
Movement:	L - T - R			L - T - R			L - T - R			L - T - R		
Control:	Protected			Protected			Protected			Protected		
Rights:	Ovl			Include			Ovl			Ignore		
Min. Green:	7	7	7	7	7	7	7	7	7	7	7	7
Lanes:	1 1	1 0	1	0 0	0 0	0	1 0	2 0	1	1 0	4 0	1
Volume Module:												
Base Vol:	263	305	697	0	0	0	193	1265	294	200	1922	296
Growth Adj:	1.00	1.00	1.00	1.00	1.00	1.00	1.00	1.00	1.00	1.00	1.00	1.00
Initial Bse:	263	305	697	0	0	0	193	1265	294	200	1922	296
Added Vol:	0	0	0	0	0	0	0	0	0	0	0	0
PasserByVol:	0	0	0	0	0	0	0	0	0	0	0	0
Initial Fut:	263	305	697	0	0	0	193	1265	294	200	1922	296
User Adj:	1.00	1.00	1.00	1.00	1.00	1.00	1.00	1.00	1.00	1.00	1.00	0.00
PHF Adj:	1.00	1.00	1.00	1.00	1.00	1.00	1.00	1.00	1.00	1.00	1.00	0.00
PHF Volume:	263	305	697	0	0	0	193	1265	294	200	1922	0
Reduct Vol:	0	0	0	0	0	0	0	0	0	0	0	0
Reduced Vol:	263	305	697	0	0	0	193	1265	294	200	1922	0
PCE Adj:	1.00	1.00	1.00	1.00	1.00	1.00	1.00	1.00	1.00	1.00	1.00	0.00
MLF Adj:	1.00	1.00	1.00	1.00	1.00	1.00	1.00	1.00	1.00	1.00	1.00	0.00
FinalVolume:	263	305	697	0	0	0	193	1265	294	200	1922	0
Saturation Flow Module:												
Sat/Lane:	1900	1900	1900	1900	1900	1900	1900	1900	1900	1900	1900	1900
Adjustment:	0.92	0.92	0.85	1.00	1.00	1.00	0.95	0.95	0.85	0.95	0.91	1.00
Lanes:	1.39	1.61	1.00	0.00	0.00	0.00	1.00	2.00	1.00	1.00	4.00	1.00
Final Sat.:	2430	2818	1615	0	0	0	1805	3610	1615	1805	6916	1900
Capacity Analysis Module:												
Vol/Sat:	0.11	0.11	0.43	0.00	0.00	0.00	0.11	0.35	0.18	0.11	0.28	0.00
Crit Moves:			****					****		****		
Green/Cycle:	0.26	0.36	0.49	0.00	0.00	0.00	0.14	0.39	0.66	0.12	0.37	0.00
Volume/Cap:	0.41	0.30	0.89	0.00	0.00	0.00	0.74	0.89	0.28	0.89	0.74	0.00
Delay/Veh:	30.8	23.0	35.4	0.0	0.0	0.0	51.9	35.5	7.4	75.1	28.2	0.0
User DelAdj:	1.00	1.00	1.00	1.00	1.00	1.00	1.00	1.00	1.00	1.00	1.00	1.00
AdjDel/Veh:	30.8	23.0	35.4	0.0	0.0	0.0	51.9	35.5	7.4	75.1	28.2	0.0
LOS by Move:	C	C	D	A	A	A	D	D	A	E	C	A
HCM2kAvgQ:	5	4	23	0	0	0	7	23	4	9	15	0

Note: Queue reported is the number of cars per lane.

Traffix 7.9.0415 (c) 2007 Dowling Assoc. Licensed to MMA, LONG BEACH, CA

Overlook Parkway Extension
Future Alt 1 (Gates Closed - No Overlook)
AM Peak Hour

Level Of Service Computation Report
2000 HCM Operations Method (Future Volume Alternative)

Intersection #12 Victoria Ave/Arlington Ave

Cycle (sec): 100 | Critical Vol./Cap.(X): 1.141
Loss Time (sec): 16 (Y+R=4.0 sec) | Average Delay (sec/veh): 83.5
Optimal Cycle: 130 | Level Of Service: F

Street Name:	Victoria Ave						Arlington Ave					
Approach:	North Bound			South Bound			East Bound			West Bound		
Movement:	L - T - R			L - T - R			L - T - R			L - T - R		
Control:	Protected			Protected			Protected			Protected		
Rights:	Ovl			Include			Include			Include		
Min. Green:	7	7	7	7	7	7	7	7	7	7	7	7
Lanes:	1 0	1 0	1	1 0	1 0	1	1 0	2 1	0	1 0	2 1	0
Volume Module:												
Base Vol:	28	480	397	210	368	152	301	1313	18	440	1852	295
Growth Adj:	1.00	1.00	1.00	1.00	1.00	1.00	1.00	1.00	1.00	1.00	1.00	1.00
Initial Bse:	28	480	397	210	368	152	301	1313	18	440	1852	295
Added Vol:	0	0	0	0	0	0	0	0	0	0	0	0
PasserByVol:	0	0	0	0	0	0	0	0	0	0	0	0
Initial Fut:	28	480	397	210	368	152	301	1313	18	440	1852	295
User Adj:	1.00	1.00	1.00	1.00	1.00	1.00	1.00	1.00	1.00	1.00	1.00	1.00
PHF Adj:	1.00	1.00	1.00	1.00	1.00	1.00	1.00	1.00	1.00	1.00	1.00	1.00
PHF Volume:	28	480	397	210	368	152	301	1313	18	440	1852	295
Reduct Vol:	0	0	0	0	0	0	0	0	0	0	0	0
Reduced Vol:	28	480	397	210	368	152	301	1313	18	440	1852	295
PCE Adj:	1.00	1.00	1.00	1.00	1.00	1.00	1.00	1.00	1.00	1.00	1.00	1.00
MLF Adj:	1.00	1.00	1.00	1.00	1.00	1.00	1.00	1.00	1.00	1.00	1.00	1.00
FinalVolume:	28	480	397	210	368	152	301	1313	18	440	1852	295
Saturation Flow Module:												
Sat/Lane:	1900	1900	1900	1900	1900	1900	1900	1900	1900	1900	1900	1900
Adjustment:	0.95	1.00	0.85	0.95	1.00	0.85	0.95	0.91	0.91	0.95	0.89	0.89
Lanes:	1.00	1.00	1.00	1.00	1.00	1.00	1.00	2.96	0.04	1.00	2.59	0.41
Final Sat.:	1805	1900	1615	1805	1900	1615	1805	5107	70	1805	4380	698
Capacity Analysis Module:												
Vol/Sat:	0.02	0.25	0.25	0.12	0.19	0.09	0.17	0.26	0.26	0.24	0.42	0.42
Crit Moves:		****		****			****				****	
Green/Cycle:	0.09	0.22	0.47	0.10	0.24	0.24	0.15	0.27	0.27	0.25	0.37	0.37
Volume/Cap:	0.18	1.14	0.52	1.14	0.82	0.40	1.14	0.97	0.97	0.97	1.14	1.14
Delay/Veh:	43.0	127	19.1	154.3	47.0	32.8	141.6	53.8	53.8	71.3	102	101.9
User DelAdj:	1.00	1.00	1.00	1.00	1.00	1.00	1.00	1.00	1.00	1.00	1.00	1.00
AdjDel/Veh:	43.0	127	19.1	154.3	47.0	32.8	141.6	53.8	53.8	71.3	102	101.9
LOS by Move:	D	F	B	F	D	C	F	D	D	E	F	F
HCM2kAvgQ:	1	26	9	13	13	4	17	20	20	19	40	40

Note: Queue reported is the number of cars per lane.

Traffix 7.9.0415 (c) 2007 Dowling Assoc. Licensed to MMA, LONG BEACH, CA

Overlook Parkway Extension
Future Alt 1 (Gates Closed - No Overlook)
AM Peak Hour

Level Of Service Computation Report
2000 HCM Operations Method (Future Volume Alternative)

Intersection #13 Alessandro Blvd/Arlington Ave

Cycle (sec):	100	Critical Vol./Cap.(X):	1.041
Loss Time (sec):	16 (Y+R=4.0 sec)	Average Delay (sec/veh):	61.3
Optimal Cycle:	130	Level Of Service:	E

Street Name:	Alessandro Blvd						Arlington Ave					
Approach:	North Bound			South Bound			East Bound			West Bound		
Movement:	L -	T -	R	L -	T -	R	L -	T -	R	L -	T -	R
Control:	Protected			Protected			Protected			Protected		
Rights:	Ovl			Include			Ovl			Ovl		
Min. Green:	7	7	7	7	7	7	7	7	7	7	7	7
Lanes:	2 0	2 0	1	2 0	2 1	0	1 0	2 0	2	2 0	2 0	1
Volume Module:												
Base Vol:	1548	1514	438	389	706	88	55	851	989	144	816	351
Growth Adj:	1.00	1.00	1.00	1.00	1.00	1.00	1.00	1.00	1.00	1.00	1.00	1.00
Initial Bse:	1548	1514	438	389	706	88	55	851	989	144	816	351
Added Vol:	0	0	0	0	0	0	0	0	0	0	0	0
PasserByVol:	0	0	0	0	0	0	0	0	0	0	0	0
Initial Fut:	1548	1514	438	389	706	88	55	851	989	144	816	351
User Adj:	1.00	1.00	1.00	1.00	1.00	1.00	1.00	1.00	1.00	1.00	1.00	1.00
PHF Adj:	1.00	1.00	1.00	1.00	1.00	1.00	1.00	1.00	1.00	1.00	1.00	1.00
PHF Volume:	1548	1514	438	389	706	88	55	851	989	144	816	351
Reduct Vol:	0	0	0	0	0	0	0	0	0	0	0	0
Reduced Vol:	1548	1514	438	389	706	88	55	851	989	144	816	351
PCE Adj:	1.00	1.00	1.00	1.00	1.00	1.00	1.00	1.00	1.00	1.00	1.00	1.00
MLF Adj:	1.00	1.00	1.00	1.00	1.00	1.00	1.00	1.00	1.00	1.00	1.00	1.00
FinalVolume:	1548	1514	438	389	706	88	55	851	989	144	816	351
Saturation Flow Module:												
Sat/Lane:	1900	1900	1900	1900	1900	1900	1900	1900	1900	1900	1900	1900
Adjustment:	0.92	0.95	0.85	0.92	0.89	0.89	0.95	0.95	0.75	0.92	0.95	0.85
Lanes:	2.00	2.00	1.00	2.00	2.67	0.33	1.00	2.00	2.00	2.00	2.00	1.00
Final Sat.:	3502	3610	1615	3502	4534	565	1805	3610	2842	3502	3610	1615
Capacity Analysis Module:												
Vol/Sat:	0.44	0.42	0.27	0.11	0.16	0.16	0.03	0.24	0.35	0.04	0.23	0.22
Crit Moves:	****				****			****		****		
Green/Cycle:	0.41	0.44	0.51	0.12	0.14	0.14	0.07	0.22	0.63	0.07	0.22	0.33
Volume/Cap:	1.08	0.96	0.54	0.96	1.08	1.08	0.44	1.08	0.56	0.59	1.04	0.65
Delay/Veh:	79.1	41.7	17.4	78.5	101	100.6	47.0	95.9	11.1	48.8	81.5	31.2
User DelAdj:	1.00	1.00	1.00	1.00	1.00	1.00	1.00	1.00	1.00	1.00	1.00	1.00
AdjDel/Veh:	79.1	41.7	17.4	78.5	101	100.6	47.0	95.9	11.1	48.8	81.5	31.2
LOS by Move:	E	D	B	E	F	F	D	F	B	D	F	C
HCM2kAvgQ:	37	30	9	10	16	16	2	22	10	3	20	10

Note: Queue reported is the number of cars per lane.

Traffix 7.9.0415 (c) 2007 Dowling Assoc. Licensed to MMA, LONG BEACH, CA

Overlook Parkway Extension
Future Alt 1 (Gates Closed - No Overlook)
AM Peak Hour

Level Of Service Computation Report
2000 HCM Operations Method (Future Volume Alternative)

Intersection #14 Alessandro Blvd/Overlook Pkwy

Cycle (sec):	100	Critical Vol./Cap.(X):	1.187
Loss Time (sec):	16 (Y+R=4.0 sec)	Average Delay (sec/veh):	69.4
Optimal Cycle:	130	Level Of Service:	E

Street Name:	Alessandro Blvd						Overlook Pkwy					
Approach:	North Bound			South Bound			East Bound			West Bound		
Movement:	L -	T -	R	L -	T -	R	L -	T -	R	L -	T -	R
Control:	Protected			Protected			Protected			Protected		
Rights:	Include			Include			Include			Include		
Min. Green:	7	7	7	7	7	7	7	7	7	7	7	7
Lanes:	1 0	3 0	1	1 0	2 1	0	1 0	1 1	0	2 0	1 1	0
Volume Module:												
Base Vol:	15	2756	1292	46	1599	6	17	23	45	505	26	104
Growth Adj:	1.00	1.00	1.00	1.00	1.00	1.00	1.00	1.00	1.00	1.00	1.00	1.00
Initial Bse:	15	2756	1292	46	1599	6	17	23	45	505	26	104
Added Vol:	0	0	0	0	0	0	0	0	0	0	0	0
PasserByVol:	0	0	0	0	0	0	0	0	0	0	0	0
Initial Fut:	15	2756	1292	46	1599	6	17	23	45	505	26	104
User Adj:	1.00	1.00	1.00	1.00	1.00	1.00	1.00	1.00	1.00	1.00	1.00	1.00
PHF Adj:	1.00	1.00	1.00	1.00	1.00	1.00	1.00	1.00	1.00	1.00	1.00	1.00
PHF Volume:	15	2756	1292	46	1599	6	17	23	45	505	26	104
Reduct Vol:	0	0	0	0	0	0	0	0	0	0	0	0
Reduced Vol:	15	2756	1292	46	1599	6	17	23	45	505	26	104
PCE Adj:	1.00	1.00	1.00	1.00	1.00	1.00	1.00	1.00	1.00	1.00	1.00	1.00
MLF Adj:	1.00	1.00	1.00	1.00	1.00	1.00	1.00	1.00	1.00	1.00	1.00	1.00
FinalVolume:	15	2756	1292	46	1599	6	17	23	45	505	26	104
Saturation Flow Module:												
Sat/Lane:	1900	1900	1900	1900	1900	1900	1900	1900	1900	1900	1900	1900
Adjustment:	0.95	0.91	0.85	0.95	0.91	0.91	0.95	0.86	0.86	0.92	0.84	0.84
Lanes:	1.00	3.00	1.00	1.00	2.99	0.01	1.00	1.00	1.00	2.00	1.00	1.00
Final Sat.:	1805	5187	1615	1805	5162	19	1805	1626	1626	3502	1588	1588
Capacity Analysis Module:												
Vol/Sat:	0.01	0.53	0.80	0.03	0.31	0.31	0.01	0.01	0.03	0.14	0.02	0.07
Crit Moves:			****	****					****	****		
Green/Cycle:	0.12	0.59	0.59	0.07	0.54	0.54	0.09	0.07	0.07	0.11	0.09	0.09
Volume/Cap:	0.07	0.90	1.35	0.36	0.57	0.57	0.11	0.20	0.40	1.35	0.19	0.74
Delay/Veh:	39.0	21.5	184.3	46.2	15.6	15.6	42.2	44.2	46.0	218.4	42.4	59.8
User DelAdj:	1.00	1.00	1.00	1.00	1.00	1.00	1.00	1.00	1.00	1.00	1.00	1.00
AdjDel/Veh:	39.0	21.5	184.3	46.2	15.6	15.6	42.2	44.2	46.0	218.4	42.4	59.8
LOS by Move:	D	C	F	D	B	B	D	D	D	F	D	E
HCM2kAvgQ:	0	30	81	2	12	12	1	1	2	19	1	5

Note: Queue reported is the number of cars per lane.

Traffix 7.9.0415 (c) 2007 Dowling Assoc. Licensed to MMA, LONG BEACH, CA

Overlook Parkway Extension
Future Alt 1 (Gates Closed - No Overlook)
AM Peak Hour

Level Of Service Computation Report
2000 HCM Operations Method (Future Volume Alternative)

Intersection #15 Alessandro Blvd/Trautwein Rd

Cycle (sec): 100 Critical Vol./Cap.(X): 0.885
Loss Time (sec): 12 (Y+R=4.0 sec) Average Delay (sec/veh): 38.2
Optimal Cycle: 103 Level Of Service: D

Street Name:	Alessandro Blvd						Trautwein Rd					
Approach:	North Bound			South Bound			East Bound			West Bound		
Movement:	L -	T -	R	L -	T -	R	L -	T -	R	L -	T -	R
Control:	Protected			Protected			Protected			Protected		
Rights:	Include			Ignore			Ignore			Include		
Min. Green:	7	7	7	7	7	7	7	7	7	7	7	7
Lanes:	2 0	3 0	0	0 0	3 0	1	3 0	0 0	1	0 0	0 0	0
Volume Module:												
Base Vol:	86	1827	0	0	1193	783	2239	0	169	0	0	0
Growth Adj:	1.00	1.00	1.00	1.00	1.00	1.00	1.00	1.00	1.00	1.00	1.00	1.00
Initial Bse:	86	1827	0	0	1193	783	2239	0	169	0	0	0
Added Vol:	0	0	0	0	0	0	0	0	0	0	0	0
PasserByVol:	0	0	0	0	0	0	0	0	0	0	0	0
Initial Fut:	86	1827	0	0	1193	783	2239	0	169	0	0	0
User Adj:	1.00	1.00	1.00	1.00	1.00	0.00	1.00	1.00	0.00	1.00	1.00	1.00
PHF Adj:	1.00	1.00	1.00	1.00	1.00	0.00	1.00	1.00	0.00	1.00	1.00	1.00
PHF Volume:	86	1827	0	0	1193	0	2239	0	0	0	0	0
Reduct Vol:	0	0	0	0	0	0	0	0	0	0	0	0
Reduced Vol:	86	1827	0	0	1193	0	2239	0	0	0	0	0
PCE Adj:	1.00	1.00	1.00	1.00	1.00	0.00	1.00	1.00	0.00	1.00	1.00	1.00
MLF Adj:	1.00	1.00	1.00	1.00	1.00	0.00	1.00	1.00	0.00	1.00	1.00	1.00
FinalVolume:	86	1827	0	0	1193	0	2239	0	0	0	0	0
Saturation Flow Module:												
Sat/Lane:	1900	1900	1900	1900	1900	1900	1900	1900	1900	1900	1900	1900
Adjustment:	0.92	0.91	1.00	1.00	0.91	1.00	0.92	1.00	1.00	1.00	1.00	1.00
Lanes:	2.00	3.00	0.00	0.00	3.00	1.00	3.00	0.00	1.00	0.00	0.00	0.00
Final Sat.:	3502	5187	0	0	5187	1900	5253	0	1900	0	0	0
Capacity Analysis Module:												
Vol/Sat:	0.02	0.35	0.00	0.00	0.23	0.00	0.43	0.00	0.00	0.00	0.00	0.00
Crit Moves:		****		****			****					
Green/Cycle:	0.10	0.37	0.00	0.00	0.33	0.00	0.44	0.00	0.00	0.00	0.00	0.00
Volume/Cap:	0.24	0.96	0.00	0.00	0.69	0.00	0.96	0.00	0.00	0.00	0.00	0.00
Delay/Veh:	41.7	43.7	0.0	0.0	29.9	0.0	38.0	0.0	0.0	0.0	0.0	0.0
User DelAdj:	1.00	1.00	1.00	1.00	1.00	1.00	1.00	1.00	1.00	1.00	1.00	1.00
AdjDel/Veh:	41.7	43.7	0.0	0.0	29.9	0.0	38.0	0.0	0.0	0.0	0.0	0.0
LOS by Move:	D	D	A	A	C	A	D	A	A	A	A	A
HCM2kAvgQ:	1	26	0	0	13	0	29	0	0	0	0	0

Note: Queue reported is the number of cars per lane.

Traffix 7.9.0415 (c) 2007 Dowling Assoc. Licensed to MMA, LONG BEACH, CA

Overlook Parkway Extension
Future Alt 1 (Gates Closed - No Overlook)
AM Peak Hour

Level Of Service Computation Report
2000 HCM 4-Way Stop Method (Future Volume Alternative)

Intersection #16 Crystal View Ter/Overlook Pkwy

Cycle (sec): 100 Critical Vol./Cap.(X): 0.007
Loss Time (sec): 0 (Y+R=4.0 sec) Average Delay (sec/veh): 6.9
Optimal Cycle: 0 Level Of Service: A

Street Name:	Crystal View Ter						Overlook Pkwy					
Approach:	North Bound			South Bound			East Bound			West Bound		
Movement:	L -	T -	R	L -	T -	R	L -	T -	R	L -	T -	R
Control:	Stop Sign			Stop Sign			Stop Sign			Stop Sign		
Rights:	Include			Include			Include			Include		
Min. Green:	7	7	7	7	7	7	7	7	7	7	7	7
Lanes:	1 0	0 0	0	0 0	0 0	1	1 0	1 1	0	1 0	1 1	0
Volume Module:												
Base Vol:	6	0	0	0	0	1	2	0	6	0	1	0
Growth Adj:	1.00	1.00	1.00	1.00	1.00	1.00	1.00	1.00	1.00	1.00	1.00	1.00
Initial Bse:	6	0	0	0	0	1	2	0	6	0	1	0
Added Vol:	0	0	0	0	0	0	0	0	0	0	0	0
PasserByVol:	0	0	0	0	0	0	0	0	0	0	0	0
Initial Fut:	6	0	0	0	0	1	2	0	6	0	1	0
User Adj:	1.00	1.00	1.00	1.00	1.00	1.00	1.00	1.00	1.00	1.00	1.00	1.00
PHF Adj:	1.00	1.00	1.00	1.00	1.00	1.00	1.00	1.00	1.00	1.00	1.00	1.00
PHF Volume:	6	0	0	0	0	1	2	0	6	0	1	0
Reduct Vol:	0	0	0	0	0	0	0	0	0	0	0	0
Reduced Vol:	6	0	0	0	0	1	2	0	6	0	1	0
PCE Adj:	1.00	1.00	1.00	1.00	1.00	1.00	1.00	1.00	1.00	1.00	1.00	1.00
MLF Adj:	1.00	1.00	1.00	1.00	1.00	1.00	1.00	1.00	1.00	1.00	1.00	1.00
FinalVolume:	6	0	0	0	0	1	2	0	6	0	1	0
Saturation Flow Module:												
Adjustment:	1.00	1.00	1.00	1.00	1.00	1.00	1.00	1.00	1.00	1.00	1.00	1.00
Lanes:	1.00	0.00	0.00	0.00	0.00	1.00	1.00	1.00	1.00	1.00	2.00	0.00
Final Sat.:	872	0	0	0	0	1081	716	796	942	716	1590	0
Capacity Analysis Module:												
Vol/Sat:	0.01	xxxx	xxxx	xxxx	xxxx	0.00	0.00	0.00	0.01	0.00	0.00	xxxx
Crit Moves:	****					****			****		****	
Delay/Veh:	7.1	0.0	0.0	0.0	0.0	6.3	7.7	0.0	6.5	0.0	7.2	0.0
Delay Adj:	1.00	1.00	1.00	1.00	1.00	1.00	1.00	1.00	1.00	1.00	1.00	1.00
AdjDel/Veh:	7.1	0.0	0.0	0.0	0.0	6.3	7.7	0.0	6.5	0.0	7.2	0.0
LOS by Move:	A	*	*	*	*	A	A	*	A	*	A	*
ApproachDel:	7.1			6.3			6.8			7.2		
Delay Adj:	1.00			1.00			1.00			1.00		
ApprAdjDel:	7.1			6.3			6.8			7.2		
LOS by Appr:	A			A			A			A		
AllWayAvgQ:	0.0	0.0	0.0	0.0	0.0	0.0	0.0	0.0	0.0	0.0	0.0	0.0

Traffix 7.9.0415 (c) 2007 Dowling Assoc. Licensed to MMA, LONG BEACH, CA

Overlook Parkway Extension
Future Alt 1 (Gates Closed - No Overlook)
AM Peak Hour

Note: Queue reported is the number of cars per lane.

Overlook Parkway Extension
Future Alt 1 (Gates Closed - No Overlook)
AM Peak Hour

Level Of Service Computation Report
2000 HCM Unsignalized Method (Future Volume Alternative)

Intersection #17 Kingdom Dr/Overlook Pkwy

Average Delay (sec/veh): 4.4 Worst Case Level Of Service: A[8.9]

Street Name:	Kingdom Dr						Overlook Pkwy					
Approach:	North Bound			South Bound			East Bound			West Bound		
Movement:	L - T - R			L - T - R			L - T - R			L - T - R		
Control:	Stop Sign			Stop Sign			Uncontrolled			Uncontrolled		
Rights:	Include			Include			Include			Include		
Lanes:	0 0 1! 0 0			0 0 1! 0 0			1 0 1 1 0			1 0 1 1 0		
Volume Module:												
Base Vol:	50	0	4	0	0	0	2	10	32	1	15	0
Growth Adj:	1.00	1.00	1.00	1.00	1.00	1.00	1.00	1.00	1.00	1.00	1.00	1.00
Initial Bse:	50	0	4	0	0	0	2	10	32	1	15	0
Added Vol:	0	0	0	0	0	0	0	0	0	0	0	0
PasserByVol:	0	0	0	0	0	0	0	0	0	0	0	0
Initial Fut:	50	0	4	0	0	0	2	10	32	1	15	0
User Adj:	1.00	1.00	1.00	1.00	1.00	1.00	1.00	1.00	1.00	1.00	1.00	1.00
PHF Adj:	1.00	1.00	1.00	1.00	1.00	1.00	1.00	1.00	1.00	1.00	1.00	1.00
PHF Volume:	50	0	4	0	0	0	2	10	32	1	15	0
Reduct Vol:	0	0	0	0	0	0	0	0	0	0	0	0
FinalVolume:	50	0	4	0	0	0	2	10	32	1	15	0
Critical Gap Module:												
Critical Gp:	6.8	6.5	6.9	7.5	6.5	6.9	4.1	xxxx	xxxxx	4.1	xxxx	xxxxx
FollowUpTim:	3.5	4.0	3.3	3.5	4.0	3.3	2.2	xxxx	xxxxx	2.2	xxxx	xxxxx
Capacity Module:												
Cnflict Vol:	40	47	21	26	63	8	15	xxxx	xxxxx	42	xxxx	xxxxx
Potent Cap.:	973	849	1058	987	832	1079	1616	xxxx	xxxxx	1580	xxxx	xxxxx
Move Cap.:	972	847	1058	982	830	1079	1616	xxxx	xxxxx	1580	xxxx	xxxxx
Volume/Cap:	0.05	0.00	0.00	0.00	0.00	0.00	0.00	xxxx	xxxx	0.00	xxxx	xxxx
Level Of Service Module:												
2Way95thQ:	xxxx	xxxx	xxxxx	xxxx	xxxx	xxxxx	0.0	xxxx	xxxxx	0.0	xxxx	xxxxx
Control Del:	xxxxx	xxxx	xxxxx	xxxxx	xxxx	xxxxx	7.2	xxxx	xxxxx	7.3	xxxx	xxxxx
LOS by Move:	*	*	*	*	*	*	A	*	*	A	*	*
Movement:	LT -	LTR -	RT	LT -	LTR -	RT	LT -	LTR -	RT	LT -	LTR -	RT
Shared Cap.:	xxxx	978	xxxxx	xxxx	0	xxxxx	xxxx	xxxx	xxxxx	xxxx	xxxx	xxxxx
SharedQueue:	xxxxx	0.2	xxxxx	xxxxx	xxxx	xxxxx	xxxxx	xxxx	xxxxx	xxxxx	xxxx	xxxxx
Shrd ConDel:	xxxxx	8.9	xxxxx	xxxxx	xxxx	xxxxx	xxxxx	xxxx	xxxxx	xxxxx	xxxx	xxxxx
Shared LOS:	*	A	*	*	*	*	*	*	*	*	*	*
ApproachDel:	8.9			xxxxxx			xxxxxx			xxxxxx		
ApproachLOS:	A			*			*			*		

Note: Queue reported is the number of cars per lane.

Overlook Parkway Extension
Future Alt 1 (Gates Closed - No Overlook)
AM Peak Hour

Level Of Service Computation Report
2000 HCM Unsignalized Method (Future Volume Alternative)

Intersection #18 Kingdom Dr/Green Orchard Pl

Average Delay (sec/veh): 3.1 Worst Case Level Of Service: A[8.6]

Street Name:	Kingdom Dr						Green Orchard Pl					
Approach:	North Bound			South Bound			East Bound			West Bound		
Movement:	L - T - R			L - T - R			L - T - R			L - T - R		
Control:	Uncontrolled			Uncontrolled			Stop Sign			Stop Sign		
Rights:	Include			Include			Include			Include		
Lanes:	0 0 0 1 0			0 1 0 0 0			0 0 0 0 0			0 0 0 0 1		
Volume Module:												
Base Vol:	0	39	2	7	17	0	0	0	0	0	0	27
Growth Adj:	1.00	1.00	1.00	1.00	1.00	1.00	1.00	1.00	1.00	1.00	1.00	1.00
Initial Bse:	0	39	2	7	17	0	0	0	0	0	0	27
Added Vol:	0	0	0	0	0	0	0	0	0	0	0	0
PasserByVol:	0	0	0	0	0	0	0	0	0	0	0	0
Initial Fut:	0	39	2	7	17	0	0	0	0	0	0	27
User Adj:	1.00	1.00	1.00	1.00	1.00	1.00	1.00	1.00	1.00	1.00	1.00	1.00
PHF Adj:	1.00	1.00	1.00	1.00	1.00	1.00	1.00	1.00	1.00	1.00	1.00	1.00
PHF Volume:	0	39	2	7	17	0	0	0	0	0	0	27
Reduct Vol:	0	0	0	0	0	0	0	0	0	0	0	0
FinalVolume:	0	39	2	7	17	0	0	0	0	0	0	27
Critical Gap Module:												
Critical Gp:	xxxxx	xxxx	xxxxx	4.1	xxxx	xxxxx	xxxxx	xxxx	xxxxx	xxxxx	xxxx	6.2
FollowUpTim:	xxxxx	xxxx	xxxxx	2.2	xxxx	xxxxx	xxxxx	xxxx	xxxxx	xxxxx	xxxx	3.3
Capacity Module:												
Cnflict Vol:	xxxx	xxxx	xxxxx	41	xxxx	xxxxx	xxxx	xxxx	xxxxx	xxxx	xxxx	40
Potent Cap.:	xxxx	xxxx	xxxxx	1581	xxxx	xxxxx	xxxx	xxxx	xxxxx	xxxx	xxxx	1037
Move Cap.:	xxxx	xxxx	xxxxx	1581	xxxx	xxxxx	xxxx	xxxx	xxxxx	xxxx	xxxx	1037
Volume/Cap:	xxxx	xxxx	xxxx	0.00	xxxx	xxxx	xxxx	xxxx	xxxx	xxxx	xxxx	0.03
Level Of Service Module:												
2Way95thQ:	xxxx	xxxx	xxxxx	0.0	xxxx	xxxxx	xxxx	xxxx	xxxxx	xxxx	xxxx	0.1
Control Del:	xxxxx	xxxx	xxxxx	7.3	xxxx	xxxxx	xxxxx	xxxx	xxxxx	xxxxx	xxxx	8.6
LOS by Move:	*	*	*	A	*	*	*	*	*	*	*	A
Movement:	LT - LTR - RT			LT - LTR - RT			LT - LTR - RT			LT - LTR - RT		
Shared Cap.:	xxxx	xxxx	xxxxx	xxxx	xxxx	xxxxx	xxxx	xxxx	xxxxx	xxxx	xxxx	xxxxx
SharedQueue:	xxxxx	xxxx	xxxxx	0.0	xxxx	xxxxx	xxxxx	xxxx	xxxxx	xxxxx	xxxx	xxxxx
Shrd ConDel:	xxxxx	xxxx	xxxxx	7.3	xxxx	xxxxx	xxxxx	xxxx	xxxxx	xxxxx	xxxx	xxxxx
Shared LOS:	*	*	*	A	*	*	*	*	*	*	*	*
ApproachDel:	xxxxxx			xxxxxx			xxxxxx			8.6		
ApproachLOS:	*			*			*			A		

Note: Queue reported is the number of cars per lane.

Traffix 7.9.0415 (c) 2007 Dowling Assoc. Licensed to MMA, LONG BEACH, CA

Overlook Parkway Extension
Future Alt 1 (Gates Closed - No Overlook)
AM Peak Hour

Level Of Service Computation Report
2000 HCM Operations Method (Future Volume Alternative)

Intersection #19 Trautwein Rd/John F. Kennedy Dr

Cycle (sec): 100 Critical Vol./Cap.(X): 1.097
Loss Time (sec): 16 (Y+R=4.0 sec) Average Delay (sec/veh): 85.0
Optimal Cycle: 130 Level Of Service: F

Street Name:	Trautwein Rd						John F. Kennedy Dr					
Approach:	North Bound			South Bound			East Bound			West Bound		
Movement:	L - T - R			L - T - R			L - T - R			L - T - R		
Control:	Protected			Protected			Protected			Protected		
Rights:	Include			Ovl			Include			Include		
Min. Green:	7	7	7	7	7	7	7	7	7	7	7	7
Lanes:	1 0 2 0 1			1 0 2 0 1			2 0 1 0 1			1 0 0 1 0		
Volume Module:												
Base Vol:	80	2084	89	9	729	944	853	75	58	129	105	66
Growth Adj:	1.00	1.00	1.00	1.00	1.00	1.00	1.00	1.00	1.00	1.00	1.00	1.00
Initial Bse:	80	2084	89	9	729	944	853	75	58	129	105	66
Added Vol:	0	0	0	0	0	0	0	0	0	0	0	0
PasserByVol:	0	0	0	0	0	0	0	0	0	0	0	0
Initial Fut:	80	2084	89	9	729	944	853	75	58	129	105	66
User Adj:	1.00	1.00	1.00	1.00	1.00	1.00	1.00	1.00	1.00	1.00	1.00	1.00
PHF Adj:	1.00	1.00	1.00	1.00	1.00	1.00	1.00	1.00	1.00	1.00	1.00	1.00
PHF Volume:	80	2084	89	9	729	944	853	75	58	129	105	66
Reduct Vol:	0	0	0	0	0	0	0	0	0	0	0	0
Reduced Vol:	80	2084	89	9	729	944	853	75	58	129	105	66
PCE Adj:	1.00	1.00	1.00	1.00	1.00	1.00	1.00	1.00	1.00	1.00	1.00	1.00
MLF Adj:	1.00	1.00	1.00	1.00	1.00	1.00	1.00	1.00	1.00	1.00	1.00	1.00
FinalVolume:	80	2084	89	9	729	944	853	75	58	129	105	66
Saturation Flow Module:												
Sat/Lane:	1900	1900	1900	1900	1900	1900	1900	1900	1900	1900	1900	1900
Adjustment:	0.95	0.95	0.85	0.95	0.95	0.85	0.92	1.00	0.85	0.95	0.94	0.94
Lanes:	1.00	2.00	1.00	1.00	2.00	1.00	2.00	1.00	1.00	1.00	0.61	0.39
Final Sat.:	1805	3610	1615	1805	3610	1615	3502	1900	1615	1805	1099	691
Capacity Analysis Module:												
Vol/Sat:	0.04	0.58	0.06	0.00	0.20	0.58	0.24	0.04	0.04	0.07	0.10	0.10
Crit Moves:		****		****			****				****	
Green/Cycle:	0.09	0.49	0.49	0.07	0.46	0.67	0.20	0.14	0.14	0.14	0.08	0.08
Volume/Cap:	0.47	1.19	0.11	0.07	0.44	0.88	1.19	0.28	0.25	0.50	1.19	1.19
Delay/Veh:	44.9	117	14.1	43.7	18.4	22.0	138.9	39.0	38.9	41.0	181	181.2
User DelAdj:	1.00	1.00	1.00	1.00	1.00	1.00	1.00	1.00	1.00	1.00	1.00	1.00
AdjDel/Veh:	44.9	117	14.1	43.7	18.4	22.0	138.9	39.0	38.9	41.0	181	181.2
LOS by Move:	D	F	B	D	B	C	F	D	D	D	F	F
HCM2kAvgQ:	3	57	1	0	8	27	25	2	2	4	11	11

Note: Queue reported is the number of cars per lane.

Traffix 7.9.0415 (c) 2007 Dowling Assoc. Licensed to MMA, LONG BEACH, CA

Overlook Parkway Extension
Future Alt 1 (Gates Closed - No Overlook)
AM Peak Hour

Level Of Service Computation Report
2000 HCM Operations Method (Future Volume Alternative)

Intersection #20 Washington St/Bradley St

Cycle (sec): 100 | Critical Vol./Cap.(X): 0.912
Loss Time (sec): 12 (Y+R=4.0 sec) | Average Delay (sec/veh): 34.4
Optimal Cycle: 116 | Level Of Service: C

Street Name:	Washington St						Bradley St					
Approach:	North Bound			South Bound			East Bound			West Bound		
Movement:	L -	T -	R	L -	T -	R	L -	T -	R	L -	T -	R
Control:	Protected			Protected			Permitted			Permitted		
Rights:	Include			Include			Include			Include		
Min. Green:	7	7	7	7	7	7	7	7	7	7	7	7
Lanes:	1 0	1 1	0	1 0	1 1	0	0 0	1! 0	0	0 0	1! 0	0
Volume Module:												
Base Vol:	408	1954	21	67	663	6	8	19	200	47	64	218
Growth Adj:	1.00	1.00	1.00	1.00	1.00	1.00	1.00	1.00	1.00	1.00	1.00	1.00
Initial Bse:	408	1954	21	67	663	6	8	19	200	47	64	218
Added Vol:	0	0	0	0	0	0	0	0	0	0	0	0
PasserByVol:	0	0	0	0	0	0	0	0	0	0	0	0
Initial Fut:	408	1954	21	67	663	6	8	19	200	47	64	218
User Adj:	1.00	1.00	1.00	1.00	1.00	1.00	1.00	1.00	1.00	1.00	1.00	1.00
PHF Adj:	1.00	1.00	1.00	1.00	1.00	1.00	1.00	1.00	1.00	1.00	1.00	1.00
PHF Volume:	408	1954	21	67	663	6	8	19	200	47	64	218
Reduct Vol:	0	0	0	0	0	0	0	0	0	0	0	0
Reduced Vol:	408	1954	21	67	663	6	8	19	200	47	64	218
PCE Adj:	1.00	1.00	1.00	1.00	1.00	1.00	1.00	1.00	1.00	1.00	1.00	1.00
MLF Adj:	1.00	1.00	1.00	1.00	1.00	1.00	1.00	1.00	1.00	1.00	1.00	1.00
FinalVolume:	408	1954	21	67	663	6	8	19	200	47	64	218
Saturation Flow Module:												
Sat/Lane:	1900	1900	1900	1900	1900	1900	1900	1900	1900	1900	1900	1900
Adjustment:	0.95	0.95	0.95	0.95	0.95	0.95	0.87	0.87	0.87	0.80	0.80	0.80
Lanes:	1.00	1.98	0.02	1.00	1.98	0.02	0.04	0.08	0.88	0.14	0.19	0.67
Final Sat.:	1805	3564	38	1805	3574	32	58	138	1454	216	294	1002
Capacity Analysis Module:												
Vol/Sat:	0.23	0.55	0.55	0.04	0.19	0.19	0.14	0.14	0.14	0.22	0.22	0.22
Crit Moves:		****		****							****	
Green/Cycle:	0.36	0.58	0.58	0.07	0.29	0.29	0.23	0.23	0.23	0.23	0.23	0.23
Volume/Cap:	0.63	0.95	0.95	0.53	0.63	0.63	0.60	0.60	0.60	0.95	0.95	0.95
Delay/Veh:	28.8	29.3	29.3	49.1	32.0	32.0	37.0	37.0	37.0	72.0	72.0	72.0
User DelAdj:	1.00	1.00	1.00	1.00	1.00	1.00	1.00	1.00	1.00	1.00	1.00	1.00
AdjDel/Veh:	28.8	29.3	29.3	49.1	32.0	32.0	37.0	37.0	37.0	72.0	72.0	72.0
LOS by Move:	C	C	C	D	C	C	D	D	D	E	E	E
HCM2kAvgQ:	11	35	35	3	10	10	7	7	7	14	14	14

Note: Queue reported is the number of cars per lane.

Traffix 7.9.0415 (c) 2007 Dowling Assoc. Licensed to MMA, LONG BEACH, CA

Overlook Parkway Extension
Future Alt 1 (Gates Closed - No Overlook)
AM Peak Hour

Level Of Service Computation Report
2000 HCM Operations Method (Future Volume Alternative)

Intersection #21 Alessandro Blvd/Via Vista Dr

Cycle (sec): 100 | Critical Vol./Cap.(X): 0.915
Loss Time (sec): 16 (Y+R=4.0 sec) | Average Delay (sec/veh): 34.0
Optimal Cycle: 123 | Level Of Service: C

Street Name:	Alessandro Blvd						Via Vista Dr					
Approach:	North Bound			South Bound			East Bound			West Bound		
Movement:	L -	T -	R	L -	T -	R	L -	T -	R	L -	T -	R
Control:	Protected			Protected			Protected			Protected		
Rights:	Include			Include			Include			Include		
Min. Green:	7	7	7	7	7	7	7	7	7	7	7	7
Lanes:	1 0	2 1	0	1 0	2 1	0	1 0	1 0	1	1 0	1 0	1
Volume Module:												
Base Vol:	58	2739	11	34	1570	75	261	53	69	22	40	120
Growth Adj:	1.00	1.00	1.00	1.00	1.00	1.00	1.00	1.00	1.00	1.00	1.00	1.00
Initial Bse:	58	2739	11	34	1570	75	261	53	69	22	40	120
Added Vol:	0	0	0	0	0	0	0	0	0	0	0	0
PasserByVol:	0	0	0	0	0	0	0	0	0	0	0	0
Initial Fut:	58	2739	11	34	1570	75	261	53	69	22	40	120
User Adj:	1.00	1.00	1.00	1.00	1.00	1.00	1.00	1.00	1.00	1.00	1.00	1.00
PHF Adj:	1.00	1.00	1.00	1.00	1.00	1.00	1.00	1.00	1.00	1.00	1.00	1.00
PHF Volume:	58	2739	11	34	1570	75	261	53	69	22	40	120
Reduct Vol:	0	0	0	0	0	0	0	0	0	0	0	0
Reduced Vol:	58	2739	11	34	1570	75	261	53	69	22	40	120
PCE Adj:	1.00	1.00	1.00	1.00	1.00	1.00	1.00	1.00	1.00	1.00	1.00	1.00
MLF Adj:	1.00	1.00	1.00	1.00	1.00	1.00	1.00	1.00	1.00	1.00	1.00	1.00
FinalVolume:	58	2739	11	34	1570	75	261	53	69	22	40	120
Saturation Flow Module:												
Sat/Lane:	1900	1900	1900	1900	1900	1900	1900	1900	1900	1900	1900	1900
Adjustment:	0.95	0.91	0.91	0.95	0.90	0.90	0.95	1.00	0.85	0.95	1.00	0.85
Lanes:	1.00	2.99	0.01	1.00	2.86	0.14	1.00	1.00	1.00	1.00	1.00	1.00
Final Sat.:	1805	5161	21	1805	4916	235	1805	1900	1615	1805	1900	1615
Capacity Analysis Module:												
Vol/Sat:	0.03	0.53	0.53	0.02	0.32	0.32	0.14	0.03	0.04	0.01	0.02	0.07
Crit Moves:		****		****			****					****
Green/Cycle:	0.11	0.55	0.55	0.07	0.50	0.50	0.15	0.11	0.11	0.11	0.08	0.08
Volume/Cap:	0.29	0.97	0.97	0.27	0.63	0.63	0.97	0.25	0.38	0.11	0.28	0.97
Delay/Veh:	41.7	33.5	33.5	45.2	18.5	18.5	89.8	41.1	42.5	40.1	44.6	118.6
User DelAdj:	1.00	1.00	1.00	1.00	1.00	1.00	1.00	1.00	1.00	1.00	1.00	1.00
AdjDel/Veh:	41.7	33.5	33.5	45.2	18.5	18.5	89.8	41.1	42.5	40.1	44.6	118.6
LOS by Move:	D	C	C	D	B	B	F	D	D	D	D	F
HCM2kAvgQ:	2	37	37	1	14	14	13	2	2	1	1	7

Note: Queue reported is the number of cars per lane.

Traffix 7.9.0415 (c) 2007 Dowling Assoc. Licensed to MMA, LONG BEACH, CA

Overlook Parkway Extension
Future Alt 1 (Gates Closed - No Overlook)
AM Peak Hour

Level Of Service Computation Report
2000 HCM 4-Way Stop Method (Future Volume Alternative)

Intersection #23 Mary St/Hawarden Dr

Cycle (sec):	100	Critical Vol./Cap.(X):	0.218
Loss Time (sec):	0 (Y+R=4.0 sec)	Average Delay (sec/veh):	8.2
Optimal Cycle:	0	Level Of Service:	A

Street Name:	Mary St							Hawarden Dr					
Approach:	North Bound			South Bound			East Bound			West Bound			
Movement:	L	T	R	L	T	R	L	T	R	L	T	R	
Control:	Stop Sign			Stop Sign			Stop Sign			Stop Sign			
Rights:	Include			Include			Include			Include			
Min. Green:	7	7	7	7	7	7	7	7	7	7	7	7	
Lanes:	0 1	0	0 0	0	0	0 1 0	0	0	1! 0 0	0	0	0 0 0	
Volume Module:													
Base Vol:	4	177	0	0	32	44	112	0	4	0	0	0	
Growth Adj:	1.00	1.00	1.00	1.00	1.00	1.00	1.00	1.00	1.00	1.00	1.00	1.00	
Initial Bse:	4	177	0	0	32	44	112	0	4	0	0	0	
Added Vol:	0	0	0	0	0	0	0	0	0	0	0	0	
PasserByVol:	0	0	0	0	0	0	0	0	0	0	0	0	
Initial Fut:	4	177	0	0	32	44	112	0	4	0	0	0	
User Adj:	1.00	1.00	1.00	1.00	1.00	1.00	1.00	1.00	1.00	1.00	1.00	1.00	
PHF Adj:	1.00	1.00	1.00	1.00	1.00	1.00	1.00	1.00	1.00	1.00	1.00	1.00	
PHF Volume:	4	177	0	0	32	44	112	0	4	0	0	0	
Reduct Vol:	0	0	0	0	0	0	0	0	0	0	0	0	
Reduced Vol:	4	177	0	0	32	44	112	0	4	0	0	0	
PCE Adj:	1.00	1.00	1.00	1.00	1.00	1.00	1.00	1.00	1.00	1.00	1.00	1.00	
MLF Adj:	1.00	1.00	1.00	1.00	1.00	1.00	1.00	1.00	1.00	1.00	1.00	1.00	
FinalVolume:	4	177	0	0	32	44	112	0	4	0	0	0	
Saturation Flow Module:													
Adjustment:	1.00	1.00	1.00	1.00	1.00	1.00	1.00	1.00	1.00	1.00	1.00	1.00	
Lanes:	0.02	0.98	0.00	0.00	0.42	0.58	0.97	0.00	0.03	0.00	0.00	0.00	
Final Sat.:	18	811	0	0	366	504	725	0	26	0	0	0	
Capacity Analysis Module:													
Vol/Sat:	0.22	0.22	xxxx	xxxx	0.09	0.09	0.15	xxxx	0.15	xxxx	xxxx	xxxx	
Crit Moves:	****				****		****						
Delay/Veh:	8.4	8.4	0.0	0.0	7.4	7.4	8.4	0.0	8.4	0.0	0.0	0.0	
Delay Adj:	1.00	1.00	1.00	1.00	1.00	1.00	1.00	1.00	1.00	1.00	1.00	1.00	
AdjDel/Veh:	8.4	8.4	0.0	0.0	7.4	7.4	8.4	0.0	8.4	0.0	0.0	0.0	
LOS by Move:	A	A	*	*	A	A	A	*	A	*	*	*	
ApproachDel:	8.4				7.4		8.4			xxxxxx			
Delay Adj:	1.00				1.00		1.00			xxxxx			
ApprAdjDel:	8.4				7.4		8.4			xxxxxx			
LOS by Appr:	A				A		A			*			
AllWayAvgQ:	0.3	0.3	0.3	0.1	0.1	0.1	0.2	0.2	0.2	0.0	0.0	0.0	

Overlook Parkway Extension
Future Alt 1 (Gates Closed - No Overlook)
AM Peak Hour

Note: Queue reported is the number of cars per lane.

Overlook Parkway Extension
Future Alt 1 (Gates Closed - No Overlook)
AM Peak Hour

Level Of Service Computation Report
2000 HCM 4-Way Stop Method (Future Volume Alternative)

Intersection #24 Hawarden Dr/Overlook Pkwy

Cycle (sec):	100	Critical Vol./Cap.(X):	0.163
Loss Time (sec):	0 (Y+R=4.0 sec)	Average Delay (sec/veh):	8.2
Optimal Cycle:	0	Level Of Service:	A

Street Name:	Hawarden Dr					Overlook Pkwy					
Approach:	North Bound			South Bound			East Bound			West Bound		
Movement:	L -	T -	R	L -	T -	R	L -	T -	R	L -	T -	R
Control:	Stop Sign			Stop Sign			Stop Sign			Stop Sign		
Rights:	Include			Include			Include			Include		
Min. Green:	7	7	7	7	7	7	7	7	7	7	7	7
Lanes:	0 0	1! 0	0	0 0	1! 0	0	1 0	1 1	0	1 0	1 1	0
Volume Module:												
Base Vol:	51	64	6	9	22	12	15	95	28	0	117	18
Growth Adj:	1.00	1.00	1.00	1.00	1.00	1.00	1.00	1.00	1.00	1.00	1.00	1.00
Initial Bse:	51	64	6	9	22	12	15	95	28	0	117	18
Added Vol:	0	0	0	0	0	0	0	0	0	0	0	0
PasserByVol:	0	0	0	0	0	0	0	0	0	0	0	0
Initial Fut:	51	64	6	9	22	12	15	95	28	0	117	18
User Adj:	1.00	1.00	1.00	1.00	1.00	1.00	1.00	1.00	1.00	1.00	1.00	1.00
PHF Adj:	1.00	1.00	1.00	1.00	1.00	1.00	1.00	1.00	1.00	1.00	1.00	1.00
PHF Volume:	51	64	6	9	22	12	15	95	28	0	117	18
Reduct Vol:	0	0	0	0	0	0	0	0	0	0	0	0
Reduced Vol:	51	64	6	9	22	12	15	95	28	0	117	18
PCE Adj:	1.00	1.00	1.00	1.00	1.00	1.00	1.00	1.00	1.00	1.00	1.00	1.00
MLF Adj:	1.00	1.00	1.00	1.00	1.00	1.00	1.00	1.00	1.00	1.00	1.00	1.00
FinalVolume:	51	64	6	9	22	12	15	95	28	0	117	18
Saturation Flow Module:												
Adjustment:	1.00	1.00	1.00	1.00	1.00	1.00	1.00	1.00	1.00	1.00	1.00	1.00
Lanes:	0.42	0.53	0.05	0.21	0.51	0.28	1.00	1.54	0.46	1.00	1.73	0.27
Final Sat.:	313	393	37	157	383	209	637	1106	339	636	1231	193
Capacity Analysis Module:												
Vol/Sat:	0.16	0.16	0.16	0.06	0.06	0.06	0.02	0.09	0.08	0.00	0.10	0.09
Crit Moves:	****				****			****			****	
Delay/Veh:	8.5	8.5	8.5	7.8	7.8	7.8	8.3	8.0	7.8	0.0	8.1	8.0
Delay Adj:	1.00	1.00	1.00	1.00	1.00	1.00	1.00	1.00	1.00	1.00	1.00	1.00
AdjDel/Veh:	8.5	8.5	8.5	7.8	7.8	7.8	8.3	8.0	7.8	0.0	8.1	8.0
LOS by Move:	A	A	A	A	A	A	A	A	A	*	A	A
ApproachDel:	8.5			7.8			8.0			8.1		
Delay Adj:	1.00			1.00			1.00			1.00		
ApprAdjDel:	8.5			7.8			8.0			8.1		
LOS by Appr:	A			A			A			A		
AllWayAvgQ:	0.2	0.2	0.2	0.1	0.1	0.1	0.0	0.1	0.1	0.0	0.1	0.1

Overlook Parkway Extension
Future Alt 1 (Gates Closed - No Overlook)
AM Peak Hour

Note: Queue reported is the number of cars per lane.

Overlook Parkway Extension
Future Alt 1 (Gates Closed - No Overlook)
AM Peak Hour

Level Of Service Computation Report
2000 HCM 4-Way Stop Method (Future Volume Alternative)

Intersection #25 Crystal View Ter/Berry Rd

Cycle (sec): 100 | Critical Vol./Cap.(X): 0.233
Loss Time (sec): 0 (Y+R=4.0 sec) | Average Delay (sec/veh): 7.5
Optimal Cycle: 0 | Level Of Service: A

Street Name:	Crystal View Ter					Berry Rd					
Approach:	North Bound			South Bound			East Bound			West Bound		
Movement:	L -	T -	R	L -	T -	R	L -	T -	R	L -	T -	R
Control:	Stop Sign			Stop Sign			Stop Sign			Stop Sign		
Rights:	Include			Include			Include			Include		
Min. Green:	7	7	7	7	7	7	7	7	7	7	7	7
Lanes:	0 0	1! 0	0	0 0	1! 0	0	0 0	0 1	0	0 0	1! 0	0
Volume Module:												
Base Vol:	3	4	236	4	1	4	0	2	5	30	2	3
Growth Adj:	1.00	1.00	1.00	1.00	1.00	1.00	1.00	1.00	1.00	1.00	1.00	1.00
Initial Bse:	3	4	236	4	1	4	0	2	5	30	2	3
Added Vol:	0	0	0	0	0	0	0	0	0	0	0	0
PasserByVol:	0	0	0	0	0	0	0	0	0	0	0	0
Initial Fut:	3	4	236	4	1	4	0	2	5	30	2	3
User Adj:	1.00	1.00	1.00	1.00	1.00	1.00	1.00	1.00	1.00	1.00	1.00	1.00
PHF Adj:	1.00	1.00	1.00	1.00	1.00	1.00	1.00	1.00	1.00	1.00	1.00	1.00
PHF Volume:	3	4	236	4	1	4	0	2	5	30	2	3
Reduct Vol:	0	0	0	0	0	0	0	0	0	0	0	0
Reduced Vol:	3	4	236	4	1	4	0	2	5	30	2	3
PCE Adj:	1.00	1.00	1.00	1.00	1.00	1.00	1.00	1.00	1.00	1.00	1.00	1.00
MLF Adj:	1.00	1.00	1.00	1.00	1.00	1.00	1.00	1.00	1.00	1.00	1.00	1.00
FinalVolume:	3	4	236	4	1	4	0	2	5	30	2	3
Saturation Flow Module:												
Adjustment:	1.00	1.00	1.00	1.00	1.00	1.00	1.00	1.00	1.00	1.00	1.00	1.00
Lanes:	0.01	0.02	0.97	0.45	0.11	0.44	0.00	0.29	0.71	0.86	0.06	0.08
Final Sat.:	13	17	1012	391	98	391	0	245	613	657	44	66
Capacity Analysis Module:												
Vol/Sat:	0.23	0.23	0.23	0.01	0.01	0.01	xxxx	0.01	0.01	0.05	0.05	0.05
Crit Moves:		****		****				****		****		
Delay/Veh:	7.4	7.4	7.4	7.0	7.0	7.0	0.0	7.0	7.0	7.7	7.7	7.7
Delay Adj:	1.00	1.00	1.00	1.00	1.00	1.00	1.00	1.00	1.00	1.00	1.00	1.00
AdjDel/Veh:	7.4	7.4	7.4	7.0	7.0	7.0	0.0	7.0	7.0	7.7	7.7	7.7
LOS by Move:	A	A	A	A	A	A	*	A	A	A	A	A
ApproachDel:	7.4			7.0			7.0			7.7		
Delay Adj:	1.00			1.00			1.00			1.00		
ApprAdjDel:	7.4			7.0			7.0			7.7		
LOS by Appr:	A			A			A			A		
AllWayAvgQ:	0.3	0.3	0.3	0.0	0.0	0.0	0.0	0.0	0.0	0.0	0.0	0.0

Traffix 7.9.0415 (c) 2007 Dowling Assoc. Licensed to MMA, LONG BEACH, CA

Overlook Parkway Extension
Future Alt 1 (Gates Closed - No Overlook)
AM Peak Hour

Note: Queue reported is the number of cars per lane.

Traffix 7.9.0415 (c) 2007 Dowling Assoc. Licensed to MMA, LONG BEACH, CA

Overlook Parkway Extension
Future Alt 1 (Gates Closed - No Overlook)
AM Peak Hour

Level Of Service Computation Report
2000 HCM 4-Way Stop Method (Future Volume Alternative)

Intersection #26 Corinthian Wy/Berry Rd

Cycle (sec): 100 | Critical Vol./Cap.(X): 0.288
Loss Time (sec): 0 (Y+R=4.0 sec) | Average Delay (sec/veh): 8.4
Optimal Cycle: 0 | Level Of Service: A

Street Name:	Corinthian Wy									Berry Rd					
Approach:	North Bound				South Bound				East Bound				West Bound		
Movement:	L	-	T	-	R	L	-	T	-	R	L	-	T	-	R
Control:	Stop Sign					Stop Sign					Stop Sign				
Rights:	Include					Include					Include				
Min. Green:	7	7	7			7	7	7			7	7	7		
Lanes:	0	0	0	0	0	0	0	1!	0	0	0	1	0	0	0
Volume Module:															
Base Vol:	0	0	0			5	0	22			216	31	0		
Growth Adj:	1.00	1.00	1.00			1.00	1.00	1.00			1.00	1.00	1.00		
Initial Bse:	0	0	0			5	0	22			216	31	0		
Added Vol:	0	0	0			0	0	0			0	0	0		
PasserByVol:	0	0	0			0	0	0			0	0	0		
Initial Fut:	0	0	0			5	0	22			216	31	0		
User Adj:	1.00	1.00	1.00			1.00	1.00	1.00			1.00	1.00	1.00		
PHF Adj:	1.00	1.00	1.00			1.00	1.00	1.00			1.00	1.00	1.00		
PHF Volume:	0	0	0			5	0	22			216	31	0		
Reduct Vol:	0	0	0			0	0	0			0	0	0		
Reduced Vol:	0	0	0			5	0	22			216	31	0		
PCE Adj:	1.00	1.00	1.00			1.00	1.00	1.00			1.00	1.00	1.00		
MLF Adj:	1.00	1.00	1.00			1.00	1.00	1.00			1.00	1.00	1.00		
FinalVolume:	0	0	0			5	0	22			216	31	0		
Saturation Flow Module:															
Adjustment:	1.00	1.00	1.00			1.00	1.00	1.00			1.00	1.00	1.00		
Lanes:	0.00	0.00	0.00			0.19	0.00	0.81			0.87	0.13	0.00		
Final Sat.:	0	0	0			154	0	678			750	108	0		
Capacity Analysis Module:															
Vol/Sat:	xxxx	xxxx	xxxx			0.03	xxxx	0.03			0.29	0.29	xxxx		
Crit Moves:						****						****			
Delay/Veh:	0.0	0.0	0.0			7.2	0.0	7.2			8.8	8.8	0.0		
Delay Adj:	1.00	1.00	1.00			1.00	1.00	1.00			1.00	1.00	1.00		
AdjDel/Veh:	0.0	0.0	0.0			7.2	0.0	7.2			8.8	8.8	0.0		
LOS by Move:	*	*	*			A	*	A			A	A	*		
ApproachDel:	xxxxxx					7.2					8.8				
Delay Adj:	xxxxx					1.00					1.00				
ApprAdjDel:	xxxxxx					7.2					8.8				
LOS by Appr:	*					A					A				
AllWayAvgQ:	0.0	0.0	0.0			0.0	0.0	0.0			0.4	0.4	0.4		

Overlook Parkway Extension
Future Alt 1 (Gates Closed - No Overlook)
AM Peak Hour

Note: Queue reported is the number of cars per lane.

Overlook Parkway Extension
Future Alt 1 (Gates Closed - No Overlook)
AM Peak Hour

Level Of Service Computation Report
2000 HCM Unsignalized Method (Future Volume Alternative)

Intersection #28 Orozco Dr/Overlook Pkwy

Average Delay (sec/veh): 1.0 Worst Case Level Of Service: B[10.4]

Street Name:	Orozco Dr									Overlook Pkwy								
Approach:	North Bound					South Bound				East Bound					West Bound			
Movement:	L	-	T	-	R	L	-	T	-	R	L	-	T	-	R	L	-	T	-	R
Control:	Stop Sign					Stop Sign					Uncontrolled					Uncontrolled				
Rights:	Include					Include					Include					Include				
Lanes:	0	1	0	0	0	1	0	0	0	0	1	0	1	1	0	1	0	1	1	0
Volume Module:																				
Base Vol:	6	7	0	2	0	0	17	82	7	0	98	79								
Growth Adj:	1.00	1.00	1.00	1.00	1.00	1.00	1.00	1.00	1.00	1.00	1.00	1.00								
Initial Bse:	6	7	0	2	0	0	17	82	7	0	98	79								
Added Vol:	0	0	0	0	0	0	0	0	0	0	0	0								
PasserByVol:	0	0	0	0	0	0	0	0	0	0	0	0								
Initial Fut:	6	7	0	2	0	0	17	82	7	0	98	79								
User Adj:	1.00	1.00	1.00	1.00	1.00	1.00	1.00	1.00	1.00	1.00	1.00	1.00								
PHF Adj:	1.00	1.00	1.00	1.00	1.00	1.00	1.00	1.00	1.00	1.00	1.00	1.00								
PHF Volume:	6	7	0	2	0	0	17	82	7	0	98	79								
Reduct Vol:	0	0	0	0	0	0	0	0	0	0	0	0								
FinalVolume:	6	7	0	2	0	0	17	82	7	0	98	79								
Critical Gap Module:																				
Critical Gp:	7.5	6.5	xxxxx	7.5	xxxx	xxxxx	4.1	xxxx	xxxxx	xxxxx	xxxx	xxxxx								
FollowUpTim:	3.5	4.0	xxxxx	3.5	xxxx	xxxxx	2.2	xxxx	xxxxx	xxxxx	xxxx	xxxxx								
Capacity Module:																				
Cnflict Vol:	169	297	xxxxx	216	xxxx	xxxxx	177	xxxx	xxxxx	xxxx	xxxx	xxxxx								
Potent Cap.:	785	618	xxxxx	727	xxxx	xxxxx	1411	xxxx	xxxxx	xxxx	xxxx	xxxxx								
Move Cap.:	778	611	xxxxx	714	xxxx	xxxxx	1411	xxxx	xxxxx	xxxx	xxxx	xxxxx								
Volume/Cap:	0.01	0.01	xxxx	0.00	xxxx	xxxx	0.01	xxxx	xxxx	xxxx	xxxx	xxxx								
Level Of Service Module:																				
2Way95thQ:	xxxx	xxxx	xxxxx	0.0	xxxx	xxxxx	0.0	xxxx	xxxxx	xxxx	xxxx	xxxxx								
Control Del:	xxxxx	xxxx	xxxxx	10.1	xxxx	xxxxx	7.6	xxxx	xxxxx	xxxxx	xxxx	xxxxx								
LOS by Move:	*	*	*	B	*	*	A	*	*	*	*	*								
Movement:	LT -	LTR -	RT	LT -	LTR -	RT	LT -	LTR -	RT	LT -	LTR -	RT								
Shared Cap.:	678	xxxx	xxxxx	xxxx	xxxx	xxxxx	xxxx	xxxx	xxxxx	xxxx	xxxx	xxxxx								
SharedQueue:	0.1	xxxx	xxxxx	xxxxx	xxxx	xxxxx	xxxxx	xxxx	xxxxx	xxxxx	xxxx	xxxxx								
Shrd ConDel:	10.4	xxxx	xxxxx	xxxxx	xxxx	xxxxx	xxxxx	xxxx	xxxxx	xxxxx	xxxx	xxxxx								
Shared LOS:	B	*	*	*	*	*	*	*	*	*	*	*								
ApproachDel:	10.4			10.1			xxxxxx			xxxxxx										
ApproachLOS:	B			B			*			*										

Note: Queue reported is the number of cars per lane.

Overlook Parkway Extension
Future Alt 1 (Gates Closed - No Overlook)
AM Peak Hour

Level Of Service Computation Report
2000 HCM 4-Way Stop Method (Future Volume Alternative)

Intersection #51 Madison St/Victoria Ave (North)

Cycle (sec): 100 Critical Vol./Cap.(X): 0.536
Loss Time (sec): 0 (Y+R=4.0 sec) Average Delay (sec/veh): 12.4
Optimal Cycle: 0 Level Of Service: B

Street Name:	Madison St									Victoria Ave (North)								
Approach:	North Bound					South Bound				East Bound					West Bound			
Movement:	L	-	T	-	R	L	-	T	-	R	L	-	T	-	R	L	-	T	-	R
Control:	Stop Sign					Stop Sign					Stop Sign					Stop Sign				
Rights:	Include					Include					Include					Include				
Min. Green:	7	7	7	7	7	7	7	7	7	7	7	7								
Lanes:	0	1	0	0	0	0	0	1	0	1	0	0	0	0	0	0	1	0	0	1
Volume Module:																				
Base Vol:	10	179	0	0	227	24	0	0	0	3	218	373								
Growth Adj:	1.00	1.00	1.00	1.00	1.00	1.00	1.00	1.00	1.00	1.00	1.00	1.00								
Initial Bse:	10	179	0	0	227	24	0	0	0	3	218	373								
Added Vol:	0	0	0	0	0	0	0	0	0	0	0	0								
PasserByVol:	0	0	0	0	0	0	0	0	0	0	0	0								
Initial Fut:	10	179	0	0	227	24	0	0	0	3	218	373								
User Adj:	1.00	1.00	1.00	1.00	1.00	1.00	1.00	1.00	1.00	1.00	1.00	1.00								
PHF Adj:	1.00	1.00	1.00	1.00	1.00	1.00	1.00	1.00	1.00	1.00	1.00	1.00								
PHF Volume:	10	179	0	0	227	24	0	0	0	3	218	373								
Reduct Vol:	0	0	0	0	0	0	0	0	0	0	0	0								
Reduced Vol:	10	179	0	0	227	24	0	0	0	3	218	373								
PCE Adj:	1.00	1.00	1.00	1.00	1.00	1.00	1.00	1.00	1.00	1.00	1.00	1.00								
MLF Adj:	1.00	1.00	1.00	1.00	1.00	1.00	1.00	1.00	1.00	1.00	1.00	1.00								
FinalVolume:	10	179	0	0	227	24	0	0	0	3	218	373								
Saturation Flow Module:																				
Adjustment:	1.00	1.00	1.00	1.00	1.00	1.00	1.00	1.00	1.00	1.00	1.00	1.00								
Lanes:	0.05	0.95	0.00	0.00	1.00	1.00	0.00	0.00	0.00	0.01	0.99	1.00								
Final Sat.:	30	530	0	0	559	623	0	0	0	8	604	696								
Capacity Analysis Module:																				
Vol/Sat:	0.34	0.34	xxxx	xxxx	0.41	0.04	xxxx	xxxx	xxxx	0.36	0.36	0.54								
Crit Moves:		****			****							****								
Delay/Veh:	12.2	12.2	0.0	0.0	12.8	8.4	0.0	0.0	0.0	11.5	11.5	13.1								
Delay Adj:	1.00	1.00	1.00	1.00	1.00	1.00	1.00	1.00	1.00	1.00	1.00	1.00								
AdjDel/Veh:	12.2	12.2	0.0	0.0	12.8	8.4	0.0	0.0	0.0	11.5	11.5	13.1								
LOS by Move:	B	B	*	*	B	A	*	*	*	B	B	B								
ApproachDel:	12.2			12.3			xxxxxx			12.5										
Delay Adj:	1.00			1.00			xxxxx			1.00										
ApprAdjDel:	12.2			12.3			xxxxxx			12.5										
LOS by Appr:	B			B			*			B										
AllWayAvgQ:	0.5	0.5	0.5	0.0	0.6	0.0	0.0	0.0	0.0	0.5	0.5	1.0								

Overlook Parkway Extension
Future Alt 1 (Gates Closed - No Overlook)
AM Peak Hour

Note: Queue reported is the number of cars per lane.

Overlook Parkway Extension
Future Alt 1 (Gates Closed - No Overlook)
AM Peak Hour

Level Of Service Computation Report
2000 HCM 4-Way Stop Method (Future Volume Alternative)

Intersection #52 Madison St/Victoria Ave (South)

Cycle (sec):	100	Critical Vol./Cap.(X):	0.405
Loss Time (sec):	0 (Y+R=4.0 sec)	Average Delay (sec/veh):	10.3
Optimal Cycle:	0	Level Of Service:	B

Street Name:	Madison St							Victoria Ave (South)					
Approach:	North Bound			South Bound			East Bound			West Bound			
Movement:	L	- T	- R	L	- T	- R	L	- T	- R	L	- T	- R	
Control:	Stop Sign			Stop Sign			Stop Sign			Stop Sign			
Rights:	Include			Include			Include			Include			
Min. Green:	7	7	7	7	7	7	7	7	7	7	7	7	
Lanes:	0 0	0 1	0	0 1	0 0	0	0 0	1! 0	0	0 0	0 0	0	
Volume Module:													
Base Vol:	0	136	25	187	43	0	53	233	2	0	0	0	
Growth Adj:	1.00	1.00	1.00	1.00	1.00	1.00	1.00	1.00	1.00	1.00	1.00	1.00	
Initial Bse:	0	136	25	187	43	0	53	233	2	0	0	0	
Added Vol:	0	0	0	0	0	0	0	0	0	0	0	0	
PasserByVol:	0	0	0	0	0	0	0	0	0	0	0	0	
Initial Fut:	0	136	25	187	43	0	53	233	2	0	0	0	
User Adj:	1.00	1.00	1.00	1.00	1.00	1.00	1.00	1.00	1.00	1.00	1.00	1.00	
PHF Adj:	1.00	1.00	1.00	1.00	1.00	1.00	1.00	1.00	1.00	1.00	1.00	1.00	
PHF Volume:	0	136	25	187	43	0	53	233	2	0	0	0	
Reduct Vol:	0	0	0	0	0	0	0	0	0	0	0	0	
Reduced Vol:	0	136	25	187	43	0	53	233	2	0	0	0	
PCE Adj:	1.00	1.00	1.00	1.00	1.00	1.00	1.00	1.00	1.00	1.00	1.00	1.00	
MLF Adj:	1.00	1.00	1.00	1.00	1.00	1.00	1.00	1.00	1.00	1.00	1.00	1.00	
FinalVolume:	0	136	25	187	43	0	53	233	2	0	0	0	
Saturation Flow Module:													
Adjustment:	1.00	1.00	1.00	1.00	1.00	1.00	1.00	1.00	1.00	1.00	1.00	1.00	
Lanes:	0.00	0.84	0.16	0.81	0.19	0.00	0.18	0.81	0.01	0.00	0.00	0.00	
Final Sat.:	0	600	110	565	130	0	131	576	5	0	0	0	
Capacity Analysis Module:													
Vol/Sat:	xxxx	0.23	0.23	0.33	0.33	xxxx	0.40	0.40	0.40	xxxx	xxxx	xxxx	
Crit Moves:			****		****			****					
Delay/Veh:	0.0	9.1	9.1	10.3	10.3	0.0	10.9	10.9	10.9	0.0	0.0	0.0	
Delay Adj:	1.00	1.00	1.00	1.00	1.00	1.00	1.00	1.00	1.00	1.00	1.00	1.00	
AdjDel/Veh:	0.0	9.1	9.1	10.3	10.3	0.0	10.9	10.9	10.9	0.0	0.0	0.0	
LOS by Move:	*	A	A	B	B	*	B	B	B	*	*	*	
ApproachDel:		9.1			10.3			10.9			xxxxxx		
Delay Adj:		1.00			1.00			1.00			xxxxx		
ApprAdjDel:		9.1			10.3			10.9			xxxxxx		
LOS by Appr:		A			B			B			*		
AllWayAvgQ:	0.3	0.3	0.3	0.4	0.4	0.4	0.6	0.6	0.6	0.0	0.0	0.0	

Overlook Parkway Extension
Future Alt 1 (Gates Closed - No Overlook)
AM Peak Hour

Note: Queue reported is the number of cars per lane.

Overlook Parkway Extension
Future Alt 1 (Gates Closed - No Overlook)
AM Peak Hour

Level Of Service Computation Report
2000 HCM 4-Way Stop Method (Future Volume Alternative)

Intersection #81 Washington St/Victoria Ave (North)

Cycle (sec):	100	Critical Vol./Cap.(X):	1.243
Loss Time (sec):	0 (Y+R=4.0 sec)	Average Delay (sec/veh):	91.0
Optimal Cycle:	0	Level Of Service:	F

Street Name:	Washington St								Victoria Ave (North)					
Approach:	North Bound			South Bound			East Bound			West Bound		
Movement:	L	- T	- R	L	- T	- R	L	- T	- R	L	- T	- R
Control:	Stop Sign			Stop Sign			Stop Sign			Stop Sign		
Rights:	Include			Include			Include			Include		
Min. Green:	7	7	7	7	7	7	7	7	7	7	7	7
Lanes:	0 1	1 0	0	0 0	0 1	0	0 0	0 0	0	1 0	0 1	0
Volume Module:												
Base Vol:	399	891	0	0	334	5	0	0	0	269	195	11
Growth Adj:	1.00	1.00	1.00	1.00	1.00	1.00	1.00	1.00	1.00	1.00	1.00	1.00
Initial Bse:	399	891	0	0	334	5	0	0	0	269	195	11
Added Vol:	0	0	0	0	0	0	0	0	0	0	0	0
PasserByVol:	0	0	0	0	0	0	0	0	0	0	0	0
Initial Fut:	399	891	0	0	334	5	0	0	0	269	195	11
User Adj:	1.00	1.00	1.00	1.00	1.00	1.00	1.00	1.00	1.00	1.00	1.00	1.00
PHF Adj:	1.00	1.00	1.00	1.00	1.00	1.00	1.00	1.00	1.00	1.00	1.00	1.00
PHF Volume:	399	891	0	0	334	5	0	0	0	269	195	11
Reduct Vol:	0	0	0	0	0	0	0	0	0	0	0	0
Reduced Vol:	399	891	0	0	334	5	0	0	0	269	195	11
PCE Adj:	1.00	1.00	1.00	1.00	1.00	1.00	1.00	1.00	1.00	1.00	1.00	1.00
MLF Adj:	1.00	1.00	1.00	1.00	1.00	1.00	1.00	1.00	1.00	1.00	1.00	1.00
FinalVolume:	399	891	0	0	334	5	0	0	0	269	195	11
Saturation Flow Module:												
Adjustment:	1.00	1.00	1.00	1.00	1.00	1.00	1.00	1.00	1.00	1.00	1.00	1.00
Lanes:	0.62	1.38	0.00	0.00	0.99	0.01	0.00	0.00	0.00	1.00	0.95	0.05
Final Sat.:	321	741	0	0	511	8	0	0	0	456	463	26
Capacity Analysis Module:												
Vol/Sat:	1.24	1.20	xxxx	xxxx	0.65	0.65	xxxx	xxxx	xxxx	0.59	0.42	0.42
Crit Moves:	****				****					****		
Delay/Veh:	147.1	131	0.0	0.0	22.0	22.0	0.0	0.0	0.0	21.2	15.3	15.3
Delay Adj:	1.00	1.00	1.00	1.00	1.00	1.00	1.00	1.00	1.00	1.00	1.00	1.00
AdjDel/Veh:	147.1	131	0.0	0.0	22.0	22.0	0.0	0.0	0.0	21.2	15.3	15.3
LOS by Move:	F	F	*	*	C	C	*	*	*	C	C	C
ApproachDel:	135.7			22.0			xxxxxx			18.6		
Delay Adj:	1.00			1.00			xxxxx			1.00		
ApprAdjDel:	135.7			22.0			xxxxxx			18.6		
LOS by Appr:	F			C			*			C		
AllWayAvgQ:	19.8	17.4	0.0	1.7	1.7	1.7	0.0	0.0	0.0	1.3	0.7	0.7

Overlook Parkway Extension
Future Alt 1 (Gates Closed - No Overlook)
AM Peak Hour

Note: Queue reported is the number of cars per lane.

Overlook Parkway Extension
Future Alt 1 (Gates Closed - No Overlook)
AM Peak Hour

Level Of Service Computation Report
2000 HCM 4-Way Stop Method (Future Volume Alternative)

Intersection #82 Washington St/Victoria Ave (South)

Cycle (sec):	100	Critical Vol./Cap.(X):	1.336
Loss Time (sec):	0 (Y+R=4.0 sec)	Average Delay (sec/veh):	127.5
Optimal Cycle:	0	Level Of Service:	F

Street Name:	Washington St						Victoria Ave (South)					
Approach:	North Bound			South Bound			East Bound			West Bound		
Movement:	L	- T	- R	L	- T	- R	L	- T	- R	L	- T	- R
Control:	Stop Sign			Stop Sign			Stop Sign			Stop Sign		
Rights:	Include			Include			Include			Include		
Min. Green:	7	7	7	7	7	7	7	7	7	7	7	7
Lanes:	0 0	2 0	1	0 1	0 0	0	0 1	0 0	1	0 0	0 0	0
Volume Module:												
Base Vol:	0	1285	786	8	595	0	5	176	230	0	0	0
Growth Adj:	1.00	1.00	1.00	1.00	1.00	1.00	1.00	1.00	1.00	1.00	1.00	1.00
Initial Bse:	0	1285	786	8	595	0	5	176	230	0	0	0
Added Vol:	0	0	0	0	0	0	0	0	0	0	0	0
PasserByVol:	0	0	0	0	0	0	0	0	0	0	0	0
Initial Fut:	0	1285	786	8	595	0	5	176	230	0	0	0
User Adj:	1.00	1.00	1.00	1.00	1.00	1.00	1.00	1.00	1.00	1.00	1.00	1.00
PHF Adj:	1.00	1.00	1.00	1.00	1.00	1.00	1.00	1.00	1.00	1.00	1.00	1.00
PHF Volume:	0	1285	786	8	595	0	5	176	230	0	0	0
Reduct Vol:	0	0	0	0	0	0	0	0	0	0	0	0
Reduced Vol:	0	1285	786	8	595	0	5	176	230	0	0	0
PCE Adj:	1.00	1.00	1.00	1.00	1.00	1.00	1.00	1.00	1.00	1.00	1.00	1.00
MLF Adj:	1.00	1.00	1.00	1.00	1.00	1.00	1.00	1.00	1.00	1.00	1.00	1.00
FinalVolume:	0	1285	786	8	595	0	5	176	230	0	0	0
Saturation Flow Module:												
Adjustment:	1.00	1.00	1.00	1.00	1.00	1.00	1.00	1.00	1.00	1.00	1.00	1.00
Lanes:	0.00	2.00	1.00	0.01	0.99	0.00	0.03	0.97	1.00	0.00	0.00	0.00
Final Sat.:	0	1056	588	7	518	0	11	400	448	0	0	0
Capacity Analysis Module:												
Vol/Sat:	xxxx	1.22	1.34	1.15	1.15	xxxx	0.44	0.44	0.51	xxxx	xxxx	xxxx
Crit Moves:			****		****				****			
Delay/Veh:	0.0	137	181.5	112.0	112	0.0	18.1	18.1	18.9	0.0	0.0	0.0
Delay Adj:	1.00	1.00	1.00	1.00	1.00	1.00	1.00	1.00	1.00	1.00	1.00	1.00
AdjDel/Veh:	0.0	137	181.5	112.0	112	0.0	18.1	18.1	18.9	0.0	0.0	0.0
LOS by Move:	*	F	F	F	F	*	C	C	C	*	*	*
ApproachDel:	153.7			112.0			18.6			xxxxxx		
Delay Adj:	1.00			1.00			1.00			xxxxx		
ApprAdjDel:	153.7			112.0			18.6			xxxxxx		
LOS by Appr:	F			F			C			*		
AllWayAvgQ:	0.0	18.6	28.2	14.9	14.9	14.9	0.8	0.8	1.0	0.0	0.0	0.0

Overlook Parkway Extension
Future Alt 1 (Gates Closed - No Overlook)
AM Peak Hour

Note: Queue reported is the number of cars per lane.

Overlook Parkway Extension
Future Alt 1 (Gates Closed - No Overlook)
AM Peak Hour

Level Of Service Computation Report
2000 HCM 4-Way Stop Method (Future Volume Alternative)

Intersection #221 Mary St/Victoria Ave (North)

Cycle (sec):	100	Critical Vol./Cap.(X):	1.555
Loss Time (sec):	0 (Y+R=4.0 sec)	Average Delay (sec/veh):	154.9
Optimal Cycle:	0	Level Of Service:	F

Street Name:	Mary St							Victoria Ave (North)					
Approach:	North Bound			South Bound				East Bound			West Bound		
Movement:	L	- T	- R	L	- T	- R		L	- T	- R	L	- T	- R
Control:	Stop Sign			Stop Sign				Stop Sign			Stop Sign		
Rights:	Include			Include				Include			Include		
Min. Green:	7	7	7	7	7	7		7	7	7	7	7	7
Lanes:	0 1	0	0 0	0	0 1	0 1		0 0	0	0 0	0	0 1!	0 0
Volume Module:													
Base Vol:	20	904	0	0	231	138		0	0	0	25	281	158
Growth Adj:	1.00	1.00	1.00	1.00	1.00	1.00		1.00	1.00	1.00	1.00	1.00	1.00
Initial Bse:	20	904	0	0	231	138		0	0	0	25	281	158
Added Vol:	0	0	0	0	0	0		0	0	0	0	0	0
PasserByVol:	0	0	0	0	0	0		0	0	0	0	0	0
Initial Fut:	20	904	0	0	231	138		0	0	0	25	281	158
User Adj:	1.00	1.00	1.00	1.00	1.00	1.00		1.00	1.00	1.00	1.00	1.00	1.00
PHF Adj:	1.00	1.00	1.00	1.00	1.00	1.00		1.00	1.00	1.00	1.00	1.00	1.00
PHF Volume:	20	904	0	0	231	138		0	0	0	25	281	158
Reduct Vol:	0	0	0	0	0	0		0	0	0	0	0	0
Reduced Vol:	20	904	0	0	231	138		0	0	0	25	281	158
PCE Adj:	1.00	1.00	1.00	1.00	1.00	1.00		1.00	1.00	1.00	1.00	1.00	1.00
MLF Adj:	1.00	1.00	1.00	1.00	1.00	1.00		1.00	1.00	1.00	1.00	1.00	1.00
FinalVolume:	20	904	0	0	231	138		0	0	0	25	281	158
Saturation Flow Module:													
Adjustment:	1.00	1.00	1.00	1.00	1.00	1.00		1.00	1.00	1.00	1.00	1.00	1.00
Lanes:	0.02	0.98	0.00	0.00	1.00	1.00		0.00	0.00	0.00	0.05	0.61	0.34
Final Sat.:	13	581	0	0	510	565		0	0	0	31	354	199
Capacity Analysis Module:													
Vol/Sat:	1.56	1.56	xxxx	xxxx	0.45	0.24		xxxx	xxxx	xxxx	0.79	0.79	0.79
Crit Moves:		****			****							****	
Delay/Veh:	274.9	275	0.0	0.0	15.0	10.9		0.0	0.0	0.0	28.2	28.2	28.2
Delay Adj:	1.00	1.00	1.00	1.00	1.00	1.00		1.00	1.00	1.00	1.00	1.00	1.00
AdjDel/Veh:	274.9	275	0.0	0.0	15.0	10.9		0.0	0.0	0.0	28.2	28.2	28.2
LOS by Move:	F	F	*	*	C	B		*	*	*	D	D	D
ApproachDel:	274.9				13.5			xxxxxx			28.2		
Delay Adj:	1.00				1.00			xxxxx			1.00		
ApprAdjDel:	274.9				13.5			xxxxxx			28.2		
LOS by Appr:	F				B			*			D		
AllWayAvgQ:	43.9	43.9	43.9	0.0	0.8	0.3		0.0	0.0	0.0	3.1	3.1	3.1

Overlook Parkway Extension
Future Alt 1 (Gates Closed - No Overlook)
AM Peak Hour

Note: Queue reported is the number of cars per lane.

Overlook Parkway Extension
Future Alt 1 (Gates Closed - No Overlook)
AM Peak Hour

Level Of Service Computation Report
2000 HCM 4-Way Stop Method (Future Volume Alternative)

Intersection #222 Mary St/Victoria Ave (South)

Cycle (sec):	100	Critical Vol./Cap.(X):	1.078
Loss Time (sec):	0 (Y+R=4.0 sec)	Average Delay (sec/veh):	59.0
Optimal Cycle:	0	Level Of Service:	F

Street Name:	Mary St						Victoria Ave (South)					
Approach:	North Bound			South Bound			East Bound			West Bound		
Movement:	L	T	R	L	T	R	L	T	R	L	T	R
Control:	Stop Sign			Stop Sign			Stop Sign			Stop Sign		
Rights:	Include			Include			Include			Include		
Min. Green:	7	7	7	7	7	7	7	7	7	7	7	7
Lanes:	0 0	0 1	0	0 1	0 0	0	1 0	0 1	0	0 0	0 0	0
Volume Module:												
Base Vol:	0	393	219	109	147	0	531	402	12	0	0	0
Growth Adj:	1.00	1.00	1.00	1.00	1.00	1.00	1.00	1.00	1.00	1.00	1.00	1.00
Initial Bse:	0	393	219	109	147	0	531	402	12	0	0	0
Added Vol:	0	0	0	0	0	0	0	0	0	0	0	0
PasserByVol:	0	0	0	0	0	0	0	0	0	0	0	0
Initial Fut:	0	393	219	109	147	0	531	402	12	0	0	0
User Adj:	1.00	1.00	1.00	1.00	1.00	1.00	1.00	1.00	1.00	1.00	1.00	1.00
PHF Adj:	1.00	1.00	1.00	1.00	1.00	1.00	1.00	1.00	1.00	1.00	1.00	1.00
PHF Volume:	0	393	219	109	147	0	531	402	12	0	0	0
Reduct Vol:	0	0	0	0	0	0	0	0	0	0	0	0
Reduced Vol:	0	393	219	109	147	0	531	402	12	0	0	0
PCE Adj:	1.00	1.00	1.00	1.00	1.00	1.00	1.00	1.00	1.00	1.00	1.00	1.00
MLF Adj:	1.00	1.00	1.00	1.00	1.00	1.00	1.00	1.00	1.00	1.00	1.00	1.00
FinalVolume:	0	393	219	109	147	0	531	402	12	0	0	0
Saturation Flow Module:												
Adjustment:	1.00	1.00	1.00	1.00	1.00	1.00	1.00	1.00	1.00	1.00	1.00	1.00
Lanes:	0.00	0.64	0.36	0.43	0.57	0.00	1.00	0.97	0.03	0.00	0.00	0.00
Final Sat.:	0	380	212	221	298	0	493	515	15	0	0	0
Capacity Analysis Module:												
Vol/Sat:	xxxx	1.03	1.03	0.49	0.49	xxxx	1.08	0.78	0.78	xxxx	xxxx	xxxx
Crit Moves:		****			****		****					
Delay/Veh:	0.0	70.2	70.2	16.5	16.5	0.0	89.5	29.6	29.6	0.0	0.0	0.0
Delay Adj:	1.00	1.00	1.00	1.00	1.00	1.00	1.00	1.00	1.00	1.00	1.00	1.00
AdjDel/Veh:	0.0	70.2	70.2	16.5	16.5	0.0	89.5	29.6	29.6	0.0	0.0	0.0
LOS by Move:	*	F	F	C	C	*	F	D	D	*	*	*
ApproachDel:		70.2			16.5			63.3			xxxxxx	
Delay Adj:		1.00			1.00			1.00			xxxxx	
ApprAdjDel:		70.2			16.5			63.3			xxxxxx	
LOS by Appr:		F			C			F			*	
AllWayAvgQ:	10.1	10.1	10.1	0.9	0.9	0.9	10.9	3.0	3.0	0.0	0.0	0.0

Overlook Parkway Extension
Future Alt 1 (Gates Closed - No Overlook)
AM Peak Hour

Note: Queue reported is the number of cars per lane.

Overlook Parkway Extension
Future Alt 1 (Gates Closed - No Overlook)
PM Peak Hour

Scenario Report

Scenario:	Future Alt 1 PM
Command:	Future Alt 1 PM
Volume:	Future Alt 1 PM
Geometry:	Future
Impact Fee:	Default Impact Fee
Trip Generation:	none
Trip Distribution:	none
Paths:	Default Path
Routes:	Default Route
Configuration:	Future Alt 1 PM

Overlook Parkway Extension
Future Alt 1 (Gates Closed - No Overlook)
PM Peak Hour

Impact Analysis Report
Level Of Service

Intersection	Base LOS	Base Del/Veh	Base V/C	Future LOS	Future Del/Veh	Future V/C	Change in
# 1 Madison St/SR-91 WB Ramps	C	34.3	0.835	C	34.3	0.835	+ 0.000 D/V
# 2 Madison St/SR-91 EB Ramps	E	57.9	0.959	E	57.9	0.959	+ 0.000 D/V
# 3 Madison St/Indiana Ave	F	131.1	1.326	F	131.1	1.326	+ 0.000 D/V
# 4 Madison St/Lincoln Ave	C	32.3	0.644	C	32.3	0.644	+ 0.000 D/V
# 6 Washington St/Indiana Ave	C	31.1	0.913	C	31.1	0.913	+ 0.000 D/V
# 7 Washington St/Lincoln Ave	F	135.0	1.354	F	135.0	1.354	+ 0.000 V/C
# 9 Washington St/Overlook Pkwy	B	12.3	0.668	B	12.3	0.668	+ 0.000 D/V
# 10 Riverside Ave-SR-91 WB/Arlingt	E	62.0	1.067	E	62.0	1.067	+ 0.000 D/V
# 11 Indiana Ave-SR-91 EB/Arlington	E	61.3	1.118	E	61.3	1.118	+ 0.000 D/V
# 12 Victoria Ave/Arlington Ave	E	73.4	1.050	E	73.4	1.050	+ 0.000 D/V
# 13 Alessandro Blvd/Arlington Ave	F	104.4	1.231	F	104.4	1.231	+ 0.000 D/V
# 14 Alessandro Blvd/Overlook Pkwy	F	88.7	1.077	F	88.7	1.077	+ 0.000 D/V
# 15 Alessandro Blvd/Trautwein Rd	C	28.4	0.831	C	28.4	0.831	+ 0.000 D/V
# 16 Crystal View Ter/Overlook Pkwy	A	7.0	0.006	A	7.0	0.006	+ 0.000 V/C
# 17 Kingdom Dr/Overlook Pkwy	A	8.9	0.000	A	8.9	0.000	+ 0.000 D/V
# 18 Kingdom Dr/Green Orchard Pl	A	8.5	0.000	A	8.5	0.000	+ 0.000 D/V
# 19 Trautwein Rd/John F. Kennedy D	D	36.1	0.908	D	36.1	0.908	+ 0.000 D/V
# 20 Washington St/Bradley St	E	60.4	1.007	E	60.4	1.007	+ 0.000 D/V
# 21 Alessandro Blvd/Via Vista Dr	C	24.3	0.908	C	24.3	0.908	+ 0.000 D/V
# 23 Mary St/Hawarden Dr	A	7.9	0.228	A	7.9	0.228	+ 0.000 V/C
# 24 Hawarden Dr/Overlook Pkwy	A	8.0	0.120	A	8.0	0.120	+ 0.000 V/C
# 25 Crystal View Ter/Berry Rd	A	9.5	0.413	A	9.5	0.413	+ 0.000 V/C
# 26 Corinthian Wy/Berry Rd	A	8.9	0.386	A	8.9	0.386	+ 0.000 V/C

Traffix 7.9.0415 (c) 2007 Dowling Assoc. Licensed to MMA, LONG BEACH, CA

Overlook Parkway Extension
Future Alt 1 (Gates Closed - No Overlook)
PM Peak Hour

Intersection	Base LOS	Base Del/Veh	Base V/C	Future LOS	Future Del/Veh	Future V/C	Change in
# 28 Orozco Dr/Overlook Pkwy	B	10.1	0.000	B	10.1	0.000	+ 0.000 D/V
# 51 Madison St/Victoria Ave (North	F	77.2	1.210	F	77.2	1.210	+ 0.000 V/C
# 52 Madison St/Victoria Ave (South	E	47.4	1.036	E	47.4	1.036	+ 0.000 V/C
# 81 Washington St/Victoria Ave (No	E	45.8	1.081	E	45.8	1.081	+ 0.000 V/C
# 82 Washington St/Victoria Ave (So	F	285.3	2.415	F	285.3	2.415	+ 0.000 V/C
#221 Mary St/Victoria Ave (North)	F	91.5	1.241	F	91.5	1.241	+ 0.000 V/C
#222 Mary St/Victoria Ave (South)	F	86.2	1.287	F	86.2	1.287	+ 0.000 V/C

Traffix 7.9.0415 (c) 2007 Dowling Assoc. Licensed to MMA, LONG BEACH, CA

Overlook Parkway Extension
Future Alt 1 (Gates Closed - No Overlook)
PM Peak Hour

Level Of Service Computation Report
2000 HCM Operations Method (Future Volume Alternative)

Intersection #1 Madison St/SR-91 WB Ramps

Cycle (sec):	100	Critical Vol./Cap.(X):	0.835
Loss Time (sec):	12 (Y+R=4.0 sec)	Average Delay (sec/veh):	34.3
Optimal Cycle:	86	Level Of Service:	C

Street Name:	Madison St								SR-91 WB Ramps					
Approach:	North Bound				South Bound				East Bound				West Bound	
Movement:	L	- T	- R	L	- T	- R	L	- T	- R	L	- T	- R	L	- T	- R
Control:	Protected			Protected			Split Phase			Split Phase					
Rights:	Include			Include			Include			Include					
Min. Green:	7	7	7	7	7	7	7	7	7	7	7	7			
Lanes:	1	0 2	0 0	0	0 3	0 1	0	0 0	0 0	0	1 0	0 1			
Volume Module:															
Base Vol:	428	1030	0	0	1133	218	0	0	0	472	2	186			
Growth Adj:	1.00	1.00	1.00	1.00	1.00	1.00	1.00	1.00	1.00	1.00	1.00	1.00			
Initial Bse:	428	1030	0	0	1133	218	0	0	0	472	2	186			
Added Vol:	0	0	0	0	0	0	0	0	0	0	0	0			
PasserByVol:	0	0	0	0	0	0	0	0	0	0	0	0			
Initial Fut:	428	1030	0	0	1133	218	0	0	0	472	2	186			
User Adj:	1.00	1.00	1.00	1.00	1.00	1.00	1.00	1.00	1.00	1.00	1.00	1.00			
PHF Adj:	1.00	1.00	1.00	1.00	1.00	1.00	1.00	1.00	1.00	1.00	1.00	1.00			
PHF Volume:	428	1030	0	0	1133	218	0	0	0	472	2	186			
Reduct Vol:	0	0	0	0	0	0	0	0	0	0	0	0			
Reduced Vol:	428	1030	0	0	1133	218	0	0	0	472	2	186			
PCE Adj:	1.00	1.00	1.00	1.00	1.00	1.00	1.00	1.00	1.00	1.00	1.00	1.00			
MLF Adj:	1.00	1.00	1.00	1.00	1.00	1.00	1.00	1.00	1.00	1.00	1.00	1.00			
FinalVolume:	428	1030	0	0	1133	218	0	0	0	472	2	186			
Saturation Flow Module:															
Sat/Lane:	1900	1900	1900	1900	1900	1900	1900	1900	1900	1900	1900	1900			
Adjustment:	0.95	0.95	1.00	1.00	0.91	0.85	1.00	1.00	1.00	0.89	0.89	0.85			
Lanes:	1.00	2.00	0.00	0.00	3.00	1.00	0.00	0.00	0.00	0.99	0.01	1.00			
Final Sat.:	1805	3610	0	0	5187	1615	0	0	0	1690	7	1615			
Capacity Analysis Module:															
Vol/Sat:	0.24	0.29	0.00	0.00	0.22	0.13	0.00	0.00	0.00	0.28	0.28	0.12			
Crit Moves:	****				****						****				
Green/Cycle:	0.28	0.44	0.00	0.00	0.26	0.26	0.00	0.00	0.00	0.33	0.33	0.33			
Volume/Cap:	0.84	0.65	0.00	0.00	0.84	0.52	0.00	0.00	0.00	0.84	0.84	0.34			
Delay/Veh:	45.0	23.1	0.0	0.0	39.5	32.6	0.0	0.0	0.0	41.1	41.1	25.4			
User DelAdj:	1.00	1.00	1.00	1.00	1.00	1.00	1.00	1.00	1.00	1.00	1.00	1.00			
AdjDel/Veh:	45.0	23.1	0.0	0.0	39.5	32.6	0.0	0.0	0.0	41.1	41.1	25.4			
LOS by Move:	D	C	A	A	D	C	A	A	A	D	D	C			
HCM2kAvgQ:	15	14	0	0	15	6	0	0	0	16	16	4			

Note: Queue reported is the number of cars per lane.

Traffix 7.9.0415 (c) 2007 Dowling Assoc. Licensed to MMA, LONG BEACH, CA

Overlook Parkway Extension
Future Alt 1 (Gates Closed - No Overlook)
PM Peak Hour

Level Of Service Computation Report
2000 HCM Operations Method (Future Volume Alternative)

Intersection #2 Madison St/SR-91 EB Ramps

Cycle (sec):	100	Critical Vol./Cap.(X):	0.959
Loss Time (sec):	12 (Y+R=4.0 sec)	Average Delay (sec/veh):	57.9
Optimal Cycle:	130	Level Of Service:	E

Street Name:	Madison St								SR-91 EB Ramps					
Approach:	North Bound				South Bound				East Bound				West Bound	
Movement:	L	- T	- R	L	- T	- R	L	- T	- R	L	- T	- R	L	- T	- R
Control:	Protected			Protected			Protected			Protected					
Rights:	Include			Include			Include			Include					
Min. Green:	7	7	7	7	7	7	7	7	7	7	7	7			
Lanes:	0	0 3	0 1	1	0 2	0 0	0	1 0	0 1	0	0 0	0 0			
Volume Module:															
Base Vol:	0	1180	466	215	1330	0	260	0	768	0	0	0			
Growth Adj:	1.00	1.00	1.00	1.00	1.00	1.00	1.00	1.00	1.00	1.00	1.00	1.00			
Initial Bse:	0	1180	466	215	1330	0	260	0	768	0	0	0			
Added Vol:	0	0	0	0	0	0	0	0	0	0	0	0			
PasserByVol:	0	0	0	0	0	0	0	0	0	0	0	0			
Initial Fut:	0	1180	466	215	1330	0	260	0	768	0	0	0			
User Adj:	1.00	1.00	1.00	1.00	1.00	1.00	1.00	1.00	1.00	1.00	1.00	1.00			
PHF Adj:	1.00	1.00	1.00	1.00	1.00	1.00	1.00	1.00	1.00	1.00	1.00	1.00			
PHF Volume:	0	1180	466	215	1330	0	260	0	768	0	0	0			
Reduct Vol:	0	0	0	0	0	0	0	0	0	0	0	0			
Reduced Vol:	0	1180	466	215	1330	0	260	0	768	0	0	0			
PCE Adj:	1.00	1.00	1.00	1.00	1.00	1.00	1.00	1.00	1.00	1.00	1.00	1.00			
MLF Adj:	1.00	1.00	1.00	1.00	1.00	1.00	1.00	1.00	1.00	1.00	1.00	1.00			
FinalVolume:	0	1180	466	215	1330	0	260	0	768	0	0	0			
Saturation Flow Module:															
Sat/Lane:	1900	1900	1900	1900	1900	1900	1900	1900	1900	1900	1900	1900			
Adjustment:	1.00	0.91	0.85	0.95	0.95	1.00	0.95	1.00	0.85	1.00	1.00	1.00			
Lanes:	0.00	3.00	1.00	1.00	2.00	0.00	1.00	0.00	1.00	0.00	0.00	0.00			
Final Sat.:	0	5187	1615	1805	3610	0	1809	0	1615	0	0	0			
Capacity Analysis Module:															
Vol/Sat:	0.00	0.23	0.29	0.12	0.37	0.00	0.14	0.00	0.48	0.00	0.00	0.00			
Crit Moves:	****				****				****						
Green/Cycle:	0.00	0.30	0.30	0.12	0.35	0.00	0.35	0.00	0.46	0.00	0.00	0.00			
Volume/Cap:	0.00	0.76	0.96	0.96	1.04	0.00	0.41	0.00	1.04	0.00	0.00	0.00			
Delay/Veh:	0.0	34.0	65.8	93.0	69.1	0.0	24.8	0.0	71.7	0.0	0.0	0.0			
User DelAdj:	1.00	1.00	1.00	1.00	1.00	1.00	1.00	1.00	1.00	1.00	1.00	1.00			
AdjDel/Veh:	0.0	34.0	65.8	93.0	69.1	0.0	24.8	0.0	71.7	0.0	0.0	0.0			
LOS by Move:	A	C	E	F	E	A	C	A	E	A	A	A			
HCM2kAvgQ:	0	14	19	11	31	0	6	0	33	0	0	0			

Note: Queue reported is the number of cars per lane.

Traffix 7.9.0415 (c) 2007 Dowling Assoc. Licensed to MMA, LONG BEACH, CA

Overlook Parkway Extension
Future Alt 1 (Gates Closed - No Overlook)
PM Peak Hour

Level Of Service Computation Report
2000 HCM Operations Method (Future Volume Alternative)

Intersection #3 Madison St/Indiana Ave

Cycle (sec):	100	Critical Vol./Cap.(X):	1.326
Loss Time (sec):	16 (Y+R=4.0 sec)	Average Delay (sec/veh):	131.1
Optimal Cycle:	130	Level Of Service:	F

Street Name:	Madison St						Indiana Ave					
Approach:	North Bound			South Bound			East Bound			West Bound		
Movement:	L - T - R			L - T - R			L - T - R			L - T - R		
Control:	Protected			Protected			Protected			Protected		
Rights:	Include			Include			Include			Include		
Min. Green:	7	7	7	7	7	7	7	7	7	7	7	7
Lanes:	1 0	1 1	0	1 0	1 1	0	1 0	1 1	0	1 0	1 1	0
Volume Module:												
Base Vol:	91	731	24	713	1113	266	381	615	57	110	477	496
Growth Adj:	1.00	1.00	1.00	1.00	1.00	1.00	1.00	1.00	1.00	1.00	1.00	1.00
Initial Bse:	91	731	24	713	1113	266	381	615	57	110	477	496
Added Vol:	0	0	0	0	0	0	0	0	0	0	0	0
PasserByVol:	0	0	0	0	0	0	0	0	0	0	0	0
Initial Fut:	91	731	24	713	1113	266	381	615	57	110	477	496
User Adj:	1.00	1.00	1.00	1.00	1.00	1.00	1.00	1.00	1.00	1.00	1.00	1.00
PHF Adj:	1.00	1.00	1.00	1.00	1.00	1.00	1.00	1.00	1.00	1.00	1.00	1.00
PHF Volume:	91	731	24	713	1113	266	381	615	57	110	477	496
Reduct Vol:	0	0	0	0	0	0	0	0	0	0	0	0
Reduced Vol:	91	731	24	713	1113	266	381	615	57	110	477	496
PCE Adj:	1.00	1.00	1.00	1.00	1.00	1.00	1.00	1.00	1.00	1.00	1.00	1.00
MLF Adj:	1.00	1.00	1.00	1.00	1.00	1.00	1.00	1.00	1.00	1.00	1.00	1.00
FinalVolume:	91	731	24	713	1113	266	381	615	57	110	477	496
Saturation Flow Module:												
Sat/Lane:	1900	1900	1900	1900	1900	1900	1900	1900	1900	1900	1900	1900
Adjustment:	0.95	0.95	0.95	0.95	0.92	0.92	0.95	0.94	0.94	0.95	0.88	0.88
Lanes:	1.00	1.94	0.06	1.00	1.61	0.39	1.00	1.83	0.17	1.00	1.00	1.00
Final Sat.:	1805	3478	114	1805	2829	676	1805	3261	302	1805	1668	1668
Capacity Analysis Module:												
Vol/Sat:	0.05	0.21	0.21	0.40	0.39	0.39	0.21	0.19	0.19	0.06	0.29	0.30
Crit Moves:		****		****			****					****
Green/Cycle:	0.07	0.16	0.16	0.30	0.39	0.39	0.16	0.28	0.28	0.10	0.22	0.22
Volume/Cap:	0.72	1.33	1.33	1.33	1.02	1.02	1.33	0.67	0.67	0.59	1.28	1.33
Delay/Veh:	63.7	201	200.6	194.3	59.7	59.7	210.8	33.8	33.8	47.5	173	194.8
User DelAdj:	1.00	1.00	1.00	1.00	1.00	1.00	1.00	1.00	1.00	1.00	1.00	1.00
AdjDel/Veh:	63.7	201	200.6	194.3	59.7	59.7	210.8	33.8	33.8	47.5	173	194.8
LOS by Move:	E	F	F	F	E	E	F	C	C	D	F	F
HCM2kAvgQ:	4	26	26	45	31	31	25	11	11	4	31	34

Note: Queue reported is the number of cars per lane.

Traffix 7.9.0415 (c) 2007 Dowling Assoc. Licensed to MMA, LONG BEACH, CA

Overlook Parkway Extension
Future Alt 1 (Gates Closed - No Overlook)
PM Peak Hour

Level Of Service Computation Report
2000 HCM Operations Method (Future Volume Alternative)

Intersection #4 Madison St/Lincoln Ave

Cycle (sec):	100	Critical Vol./Cap.(X):	0.644
Loss Time (sec):	16 (Y+R=4.0 sec)	Average Delay (sec/veh):	32.3
Optimal Cycle:	62	Level Of Service:	C

Street Name:	Madison St						Lincoln Ave					
Approach:	North Bound			South Bound			East Bound			West Bound		
Movement:	L - T - R			L - T - R			L - T - R			L - T - R		
Control:	Protected			Protected			Protected			Protected		
Rights:	Include			Include			Include			Include		
Min. Green:	7	7	7	7	7	7	7	7	7	7	7	7
Lanes:	1 0	1 1	0	1 0	1 1	0	1 0	0 1	0	1 0	1 1	0
Volume Module:												
Base Vol:	42	315	14	140	746	249	244	267	33	13	220	111
Growth Adj:	1.00	1.00	1.00	1.00	1.00	1.00	1.00	1.00	1.00	1.00	1.00	1.00
Initial Bse:	42	315	14	140	746	249	244	267	33	13	220	111
Added Vol:	0	0	0	0	0	0	0	0	0	0	0	0
PasserByVol:	0	0	0	0	0	0	0	0	0	0	0	0
Initial Fut:	42	315	14	140	746	249	244	267	33	13	220	111
User Adj:	1.00	1.00	1.00	1.00	1.00	1.00	1.00	1.00	1.00	1.00	1.00	1.00
PHF Adj:	1.00	1.00	1.00	1.00	1.00	1.00	1.00	1.00	1.00	1.00	1.00	1.00
PHF Volume:	42	315	14	140	746	249	244	267	33	13	220	111
Reduct Vol:	0	0	0	0	0	0	0	0	0	0	0	0
Reduced Vol:	42	315	14	140	746	249	244	267	33	13	220	111
PCE Adj:	1.00	1.00	1.00	1.00	1.00	1.00	1.00	1.00	1.00	1.00	1.00	1.00
MLF Adj:	1.00	1.00	1.00	1.00	1.00	1.00	1.00	1.00	1.00	1.00	1.00	1.00
FinalVolume:	42	315	14	140	746	249	244	267	33	13	220	111
Saturation Flow Module:												
Sat/Lane:	1900	1900	1900	1900	1900	1900	1900	1900	1900	1900	1900	1900
Adjustment:	0.95	0.94	0.94	0.95	0.91	0.91	0.95	0.98	0.98	0.95	0.90	0.90
Lanes:	1.00	1.91	0.09	1.00	1.50	0.50	1.00	0.89	0.11	1.00	1.33	0.67
Final Sat.:	1805	3436	153	1805	2606	870	1805	1664	206	1805	2279	1150
Capacity Analysis Module:												
Vol/Sat:	0.02	0.09	0.09	0.08	0.29	0.29	0.14	0.16	0.16	0.01	0.10	0.10
Crit Moves:	****				****		****				****	
Green/Cycle:	0.07	0.27	0.27	0.23	0.43	0.43	0.20	0.24	0.24	0.10	0.14	0.14
Volume/Cap:	0.33	0.34	0.34	0.34	0.67	0.67	0.67	0.67	0.67	0.07	0.67	0.67
Delay/Veh:	45.8	29.7	29.7	32.9	24.3	24.3	41.8	38.3	38.3	40.5	44.2	44.2
User DelAdj:	1.00	1.00	1.00	1.00	1.00	1.00	1.00	1.00	1.00	1.00	1.00	1.00
AdjDel/Veh:	45.8	29.7	29.7	32.9	24.3	24.3	41.8	38.3	38.3	40.5	44.2	44.2
LOS by Move:	D	C	C	C	C	C	D	D	D	D	D	D
HCM2kAvgQ:	2	4	4	4	14	14	8	9	9	0	6	6

Note: Queue reported is the number of cars per lane.

Traffix 7.9.0415 (c) 2007 Dowling Assoc. Licensed to MMA, LONG BEACH, CA

Overlook Parkway Extension
Future Alt 1 (Gates Closed - No Overlook)
PM Peak Hour

Level Of Service Computation Report
2000 HCM Operations Method (Future Volume Alternative)

Intersection #6 Washington St/Indiana Ave

Cycle (sec):	100	Critical Vol./Cap.(X):	0.913
Loss Time (sec):	12 (Y+R=4.0 sec)	Average Delay (sec/veh):	31.1
Optimal Cycle:	116	Level Of Service:	C

Street Name:	Washington St									Indiana Ave								
Approach:	North Bound						South Bound						East Bound						West Bound					
Movement:	L	-	T	-	R		L	-	T	-	R		L	-	T	-	R		L	-	T	-	R	
Control:	Permitted						Permitted						Protected						Protected					
Rights:	Ovl						Include						Include						Include					
Min. Green:	7		7		7		7		7		7		7		7		7		7		7		7	
Lanes:	1	0	0	1	0		1	0	0	1	0		1	0	1	1	0		1	0	1	1	0	
Volume Module:																								
Base Vol:	157		2		332		20		3		9		2		1212		158		381		1006		2	
Growth Adj:	1.00	1.00		1.00		1.00	1.00	1.00		1.00		1.00	1.00	1.00		1.00		1.00	1.00	1.00		1.00		1.00
Initial Bse:	157		2		332		20		3		9		2		1212		158		381		1006		2	
Added Vol:	0		0		0		0		0		0		0		0		0		0		0		0	
PasserByVol:	0		0		0		0		0		0		0		0		0		0		0		0	
Initial Fut:	157		2		332		20		3		9		2		1212		158		381		1006		2	
User Adj:	1.00	1.00		1.00		1.00	1.00	1.00		1.00		1.00	1.00	1.00		1.00		1.00	1.00	1.00		1.00		1.00
PHF Adj:	1.00	1.00		1.00		1.00	1.00	1.00		1.00		1.00	1.00	1.00		1.00		1.00	1.00	1.00		1.00		1.00
PHF Volume:	157		2		332		20		3		9		2		1212		158		381		1006		2	
Reduct Vol:	0		0		0		0		0		0		0		0		0		0		0		0	
Reduced Vol:	157		2		332		20		3		9		2		1212		158		381		1006		2	
PCE Adj:	1.00	1.00		1.00		1.00	1.00	1.00		1.00		1.00	1.00	1.00		1.00		1.00	1.00	1.00		1.00		1.00
MLF Adj:	1.00	1.00		1.00		1.00	1.00	1.00		1.00		1.00	1.00	1.00		1.00		1.00	1.00	1.00		1.00		1.00
FinalVolume:	157		2		332		20		3		9		2		1212		158		381		1006		2	
Saturation Flow Module:																								
Sat/Lane:	1900	1900		1900		1900	1900	1900		1900		1900	1900	1900		1900		1900	1900	1900		1900		1900
Adjustment:	0.76	0.85		0.85		0.22	0.89	0.89		0.95		0.95	0.93	0.93		0.95		0.95	0.95	0.95		0.95		0.95
Lanes:	1.00	0.01		0.99		1.00	0.25	0.75		1.00		1.00	1.77	0.23		1.00		1.99	0.01					
Final Sat.:	1442		10		1607		420	422		1265		1805	3139		409		1805		3603				7	
Capacity Analysis Module:																								
Vol/Sat:	0.11	0.21		0.21		0.05	0.01	0.01		0.00		0.39	0.39		0.21		0.28		0.28					
Crit Moves:		****										****			****									
Green/Cycle:	0.23	0.23		0.46		0.23	0.23	0.23		0.13		0.42	0.42		0.23		0.52		0.52					
Volume/Cap:	0.48	0.91		0.45		0.21	0.03	0.03		0.01		0.91	0.91		0.91		0.53		0.53					
Delay/Veh:	34.7	64.3		19.0		32.5	30.2	30.2		37.8		36.0	36.0		61.6		16.1		16.1					
User DelAdj:	1.00	1.00		1.00		1.00	1.00	1.00		1.00		1.00	1.00		1.00		1.00		1.00					
AdjDel/Veh:	34.7	64.3		19.0		32.5	30.2	30.2		37.8		36.0	36.0		61.6		16.1		16.1					
LOS by Move:	C		E		B		C	C		C		D	D		D		E		B					
HCM2kAvgQ:	5		14		7		1	0		0		0	25		25		15		11					

Note: Queue reported is the number of cars per lane.

Traffix 7.9.0415 (c) 2007 Dowling Assoc. Licensed to MMA, LONG BEACH, CA

Overlook Parkway Extension
Future Alt 1 (Gates Closed - No Overlook)
PM Peak Hour

Level Of Service Computation Report
2000 HCM 4-Way Stop Method (Future Volume Alternative)

Intersection #7 Washington St/Lincoln Ave

Cycle (sec):	100	Critical Vol./Cap.(X):	1.354
Loss Time (sec):	0 (Y+R=4.0 sec)	Average Delay (sec/veh):	135.0
Optimal Cycle:	0	Level Of Service:	F

Street Name:	Washington St									Lincoln Ave								
Approach:	North Bound						South Bound						East Bound						West Bound					
Movement:	L	-	T	-	R		L	-	T	-	R		L	-	T	-	R		L	-	T	-	R	
Control:	Stop Sign						Stop Sign						Stop Sign						Stop Sign					
Rights:	Include						Include						Include						Include					
Min. Green:	7		7		7		7		7		7		7		7		7		7		7		7	
Lanes:	0	0	1!	0	0		0	0	1!	0	0		0	0	1!	0	0		0	1	0	0	1	
Volume Module:																								
Base Vol:	50		410		49		75		451		17		10		378		45		99		253		65	
Growth Adj:	1.00	1.00		1.00		1.00	1.00	1.00		1.00		1.00	1.00	1.00		1.00		1.00	1.00	1.00		1.00		1.00
Initial Bse:	50		410		49		75		451		17		10		378		45		99		253		65	
Added Vol:	0		0		0		0		0		0		0		0		0		0		0		0	
PasserByVol:	0		0		0		0		0		0		0		0		0		0		0		0	
Initial Fut:	50		410		49		75		451		17		10		378		45		99		253		65	
User Adj:	1.00	1.00		1.00		1.00	1.00	1.00		1.00		1.00	1.00	1.00		1.00		1.00	1.00	1.00		1.00		1.00
PHF Adj:	1.00	1.00		1.00		1.00	1.00	1.00		1.00		1.00	1.00	1.00		1.00		1.00	1.00	1.00		1.00		1.00
PHF Volume:	50		410		49		75		451		17		10		378		45		99		253		65	
Reduct Vol:	0		0		0		0		0		0		0		0		0		0		0		0	
Reduced Vol:	50		410		49		75		451		17		10		378		45		99		253		65	
PCE Adj:	1.00	1.00		1.00		1.00	1.00	1.00		1.00		1.00	1.00	1.00		1.00		1.00	1.00	1.00		1.00		1.00
MLF Adj:	1.00	1.00		1.00		1.00	1.00	1.00		1.00		1.00	1.00	1.00		1.00		1.00	1.00	1.00		1.00		1.00
FinalVolume:	50		410		49		75		451		17		10		378		45		99		253		65	
Saturation Flow Module:																								
Adjustment:	1.00	1.00		1.00		1.00	1.00	1.00		1.00		1.00	1.00	1.00		1.00		1.00	1.00	1.00		1.00		1.00
Lanes:	0.10	0.80		0.10		0.14	0.83	0.03		0.02		0.88	0.10		0.28		0.72		1.00					
Final Sat.:	40		325		39		55		333		13		9		349		42		108		275		420	
Capacity Analysis Module:																								
Vol/Sat:	1.26	1.26		1.26		1.35	1.35	1.35		1.08		1.08	1.08		0.92		0.92		0.15					
Crit Moves:		****					****					****			****									
Delay/Veh:	163.6		164		163.6	200.3		200		200.3		99.8	99.8		99.8		59.0		59.0		12.8			
Delay Adj:	1.00	1.00		1.00		1.00	1.00	1.00		1.00		1.00	1.00		1.00		1.00		1.00		1.00			
AdjDel/Veh:	163.6		164		163.6	200.3		200		200.3		99.8	99.8		99.8		59.0		59.0		12.8			
LOS by Move:	F		F		F		F		F		F		F		F		F		F		B			
ApproachDel:	163.6						200.3						99.8						51.8					
Delay Adj:	1.00						1.00						1.00						1.00					
ApprAdjDel:	163.6						200.3						99.8						51.8					
LOS by Appr:	F						F						F						F					
AllWayAvgQ:	17.0	17.0		17.0		21.0	21.0	21.0		9.7		9.7	9.7		5.0		5.0		0.2					

Traffix 7.9.0415 (c) 2007 Dowling Assoc. Licensed to MMA, LONG BEACH, CA

Overlook Parkway Extension
Future Alt 1 (Gates Closed - No Overlook)
PM Peak Hour

Note: Queue reported is the number of cars per lane.

Overlook Parkway Extension
Future Alt 1 (Gates Closed - No Overlook)
PM Peak Hour

Level Of Service Computation Report
2000 HCM Operations Method (Future Volume Alternative)

Intersection #9 Washington St/Overlook Pkwy

Cycle (sec):	100	Critical Vol./Cap.(X):	0.668
Loss Time (sec):	12 (Y+R=4.0 sec)	Average Delay (sec/veh):	12.3
Optimal Cycle:	55	Level Of Service:	B

Street Name:	Washington St						Overlook Pkwy					
Approach:	North Bound			South Bound			East Bound			West Bound		
Movement:	L -	T -	R	L -	T -	R	L -	T -	R	L -	T -	R
Control:	Protected			Protected			Protected			Protected		
Rights:	Include			Include			Include			Ovl		
Min. Green:	7	7	7	7	7	7	7	7	7	7	7	7
Lanes:	0 0	1 1	0	1 0	2 0	0	0 0	0 0	0	1 0	0 0	1
Volume Module:												
Base Vol:	0	1420	35	168	2073	0	0	0	0	24	0	129
Growth Adj:	1.00	1.00	1.00	1.00	1.00	1.00	1.00	1.00	1.00	1.00	1.00	1.00
Initial Bse:	0	1420	35	168	2073	0	0	0	0	24	0	129
Added Vol:	0	0	0	0	0	0	0	0	0	0	0	0
PasserByVol:	0	0	0	0	0	0	0	0	0	0	0	0
Initial Fut:	0	1420	35	168	2073	0	0	0	0	24	0	129
User Adj:	1.00	1.00	1.00	1.00	1.00	1.00	1.00	1.00	1.00	1.00	1.00	1.00
PHF Adj:	1.00	1.00	1.00	1.00	1.00	1.00	1.00	1.00	1.00	1.00	1.00	1.00
PHF Volume:	0	1420	35	168	2073	0	0	0	0	24	0	129
Reduct Vol:	0	0	0	0	0	0	0	0	0	0	0	0
Reduced Vol:	0	1420	35	168	2073	0	0	0	0	24	0	129
PCE Adj:	1.00	1.00	1.00	1.00	1.00	1.00	1.00	1.00	1.00	1.00	1.00	1.00
MLF Adj:	1.00	1.00	1.00	1.00	1.00	1.00	1.00	1.00	1.00	1.00	1.00	1.00
FinalVolume:	0	1420	35	168	2073	0	0	0	0	24	0	129
Saturation Flow Module:												
Sat/Lane:	1900	1900	1900	1900	1900	1900	1900	1900	1900	1900	1900	1900
Adjustment:	1.00	0.95	0.95	0.95	0.95	1.00	1.00	1.00	1.00	0.95	1.00	0.85
Lanes:	0.00	1.95	0.05	1.00	2.00	0.00	0.00	0.00	0.00	1.00	0.00	1.00
Final Sat.:	0	3509	86	1805	3610	0	0	0	0	1805	0	1615
Capacity Analysis Module:												
Vol/Sat:	0.00	0.40	0.40	0.09	0.57	0.00	0.00	0.00	0.00	0.01	0.00	0.08
Crit Moves:	****				****					****		
Green/Cycle:	0.00	0.66	0.66	0.15	0.74	0.00	0.00	0.00	0.00	0.07	0.00	0.22
Volume/Cap:	0.00	0.61	0.61	0.61	0.78	0.00	0.00	0.00	0.00	0.19	0.00	0.36
Delay/Veh:	0.0	10.3	10.3	43.8	9.4	0.0	0.0	0.0	0.0	44.6	0.0	33.6
User DelAdj:	1.00	1.00	1.00	1.00	1.00	1.00	1.00	1.00	1.00	1.00	1.00	1.00
AdjDel/Veh:	0.0	10.3	10.3	43.8	9.4	0.0	0.0	0.0	0.0	44.6	0.0	33.6
LOS by Move:	A	B	B	D	A	A	A	A	A	D	A	C
HCM2kAvgQ:	0	14	14	6	22	0	0	0	0	1	0	4

Note: Queue reported is the number of cars per lane.

Overlook Parkway Extension
Future Alt 1 (Gates Closed - No Overlook)
PM Peak Hour

Level Of Service Computation Report
2000 HCM Operations Method (Future Volume Alternative)

Intersection #10 Riverside Ave-SR-91 WB/Arlington Ave

Cycle (sec): 100 Critical Vol./Cap.(X): 1.067
Loss Time (sec): 12 (Y+R=4.0 sec) Average Delay (sec/veh): 62.0
Optimal Cycle: 130 Level Of Service: E

Street Name:	Riverside Ave-SR-91 WB						Arlington Ave					
Approach:	North Bound			South Bound			East Bound			West Bound		
Movement:	L - T - R			L - T - R			L - T - R			L - T - R		
Control:	Protected			Protected			Protected			Protected		
Rights:	Include			Ovl			Ignore			Ignore		
Min. Green:	7	7	7	7	7	7	7	7	7	7	7	7
Lanes:	0 0	0 0	0	1 1	0 0	1	1 0	3 0	1	1 0	3 0	1
Volume Module:												
Base Vol:	0	0	0	927	60	408	49	2048	181	461	1052	239
Growth Adj:	1.00	1.00	1.00	1.00	1.00	1.00	1.00	1.00	1.00	1.00	1.00	1.00
Initial Bse:	0	0	0	927	60	408	49	2048	181	461	1052	239
Added Vol:	0	0	0	0	0	0	0	0	0	0	0	0
PasserByVol:	0	0	0	0	0	0	0	0	0	0	0	0
Initial Fut:	0	0	0	927	60	408	49	2048	181	461	1052	239
User Adj:	1.00	1.00	1.00	1.00	1.00	1.00	1.00	1.00	0.00	1.00	1.00	0.00
PHF Adj:	1.00	1.00	1.00	1.00	1.00	1.00	1.00	1.00	0.00	1.00	1.00	0.00
PHF Volume:	0	0	0	927	60	408	49	2048	0	461	1052	0
Reduct Vol:	0	0	0	0	0	0	0	0	0	0	0	0
Reduced Vol:	0	0	0	927	60	408	49	2048	0	461	1052	0
PCE Adj:	1.00	1.00	1.00	1.00	1.00	1.00	1.00	1.00	0.00	1.00	1.00	0.00
MLF Adj:	1.00	1.00	1.00	1.00	1.00	1.00	1.00	1.00	0.00	1.00	1.00	0.00
FinalVolume:	0	0	0	927	60	408	49	2048	0	461	1052	0
Saturation Flow Module:												
Sat/Lane:	1900	1900	1900	1900	1900	1900	1900	1900	1900	1900	1900	1900
Adjustment:	1.00	1.00	1.00	0.90	0.90	0.85	0.95	0.91	1.00	0.95	0.91	1.00
Lanes:	0.00	0.00	0.00	1.88	0.12	1.00	1.00	3.00	1.00	1.00	3.00	1.00
Final Sat.:	0	0	0	3212	208	1615	1805	5187	1900	1805	5187	1900
Capacity Analysis Module:												
Vol/Sat:	0.00	0.00	0.00	0.29	0.29	0.25	0.03	0.39	0.00	0.26	0.20	0.00
Crit Moves:				****				****		****		
Green/Cycle:	0.00	0.00	0.00	0.27	0.27	0.43	0.16	0.37	0.00	0.24	0.45	0.00
Volume/Cap:	0.00	0.00	0.00	1.07	1.07	0.59	0.17	1.07	0.00	1.07	0.45	0.00
Delay/Veh:	0.0	0.0	0.0	85.6	85.6	23.4	36.9	72.5	0.0	100.3	18.9	0.0
User DelAdj:	1.00	1.00	1.00	1.00	1.00	1.00	1.00	1.00	1.00	1.00	1.00	1.00
AdjDel/Veh:	0.0	0.0	0.0	85.6	85.6	23.4	36.9	72.5	0.0	100.3	18.9	0.0
LOS by Move:	A	A	A	F	F	C	D	E	A	F	B	A
HCM2kAvgQ:	0	0	0	24	24	10	1	34	0	22	8	0

Note: Queue reported is the number of cars per lane.

Traffix 7.9.0415 (c) 2007 Dowling Assoc. Licensed to MMA, LONG BEACH, CA

Overlook Parkway Extension
Future Alt 1 (Gates Closed - No Overlook)
PM Peak Hour

Level Of Service Computation Report
2000 HCM Operations Method (Future Volume Alternative)

Intersection #11 Indiana Ave-SR-91 EB/Arlington Ave

Cycle (sec): 100 Critical Vol./Cap.(X): 1.118
Loss Time (sec): 12 (Y+R=4.0 sec) Average Delay (sec/veh): 61.3
Optimal Cycle: 130 Level Of Service: E

Street Name:	Indiana Ave-SR-91 EB						Arlington Ave					
Approach:	North Bound			South Bound			East Bound			West Bound		
Movement:	L - T - R			L - T - R			L - T - R			L - T - R		
Control:	Protected			Protected			Protected			Protected		
Rights:	Ovl			Include			Ovl			Ignore		
Min. Green:	7	7	7	7	7	7	7	7	7	7	7	7
Lanes:	1 1	1 0	1	0 0	0 0	0	1 0	2 0	1	1 0	4 0	1
Volume Module:												
Base Vol:	176	198	685	0	0	0	296	2021	520	388	1605	220
Growth Adj:	1.00	1.00	1.00	1.00	1.00	1.00	1.00	1.00	1.00	1.00	1.00	1.00
Initial Bse:	176	198	685	0	0	0	296	2021	520	388	1605	220
Added Vol:	0	0	0	0	0	0	0	0	0	0	0	0
PasserByVol:	0	0	0	0	0	0	0	0	0	0	0	0
Initial Fut:	176	198	685	0	0	0	296	2021	520	388	1605	220
User Adj:	1.00	1.00	1.00	1.00	1.00	1.00	1.00	1.00	1.00	1.00	1.00	0.00
PHF Adj:	1.00	1.00	1.00	1.00	1.00	1.00	1.00	1.00	1.00	1.00	1.00	0.00
PHF Volume:	176	198	685	0	0	0	296	2021	520	388	1605	0
Reduct Vol:	0	0	0	0	0	0	0	0	0	0	0	0
Reduced Vol:	176	198	685	0	0	0	296	2021	520	388	1605	0
PCE Adj:	1.00	1.00	1.00	1.00	1.00	1.00	1.00	1.00	1.00	1.00	1.00	0.00
MLF Adj:	1.00	1.00	1.00	1.00	1.00	1.00	1.00	1.00	1.00	1.00	1.00	0.00
FinalVolume:	176	198	685	0	0	0	296	2021	520	388	1605	0
Saturation Flow Module:												
Sat/Lane:	1900	1900	1900	1900	1900	1900	1900	1900	1900	1900	1900	1900
Adjustment:	0.93	0.93	0.85	1.00	1.00	1.00	0.95	0.95	0.85	0.95	0.91	1.00
Lanes:	1.41	1.59	1.00	0.00	0.00	0.00	1.00	2.00	1.00	1.00	4.00	1.00
Final Sat.:	2485	2795	1615	0	0	0	1805	3610	1615	1805	6916	1900
Capacity Analysis Module:												
Vol/Sat:	0.07	0.07	0.42	0.00	0.00	0.00	0.16	0.56	0.32	0.21	0.23	0.00
Crit Moves:			****					****		****		
Green/Cycle:	0.13	0.19	0.38	0.00	0.00	0.00	0.29	0.50	0.63	0.19	0.41	0.00
Volume/Cap:	0.55	0.38	1.12	0.00	0.00	0.00	0.57	1.12	0.51	1.12	0.57	0.00
Delay/Veh:	41.7	35.8	104.4	0.0	0.0	0.0	32.0	86.3	10.5	124.6	23.3	0.0
User DelAdj:	1.00	1.00	1.00	1.00	1.00	1.00	1.00	1.00	1.00	1.00	1.00	1.00
AdjDel/Veh:	41.7	35.8	104.4	0.0	0.0	0.0	32.0	86.3	10.5	124.6	23.3	0.0
LOS by Move:	D	D	F	A	A	A	C	F	B	F	C	A
HCM2kAvgQ:	5	4	34	0	0	0	8	50	9	21	11	0

Note: Queue reported is the number of cars per lane.

Traffix 7.9.0415 (c) 2007 Dowling Assoc. Licensed to MMA, LONG BEACH, CA

Overlook Parkway Extension
Future Alt 1 (Gates Closed - No Overlook)
PM Peak Hour

Level Of Service Computation Report
2000 HCM Operations Method (Future Volume Alternative)

Intersection #12 Victoria Ave/Arlington Ave

Cycle (sec):	100	Critical Vol./Cap.(X):	1.050
Loss Time (sec):	16 (Y+R=4.0 sec)	Average Delay (sec/veh):	73.4
Optimal Cycle:	130	Level Of Service:	E

Street Name:	Victoria Ave									Arlington Ave								
Approach:	North Bound			South Bound			East Bound			West Bound		
Movement:	L	T	R	L	T	R	L	T	R	L	T	R	L	T	R	L	T	R
Control:	Protected			Protected			Protected			Protected		
Rights:	Ovl			Include			Include			Include		
Min. Green:	7	7	7	7	7	7	7	7	7	7	7	7
Lanes:	1 0	1 0	1	1 0	1 0	1	1 0	2 1	0	1 0	2 1	0
Volume Module:																		
Base Vol:	18	265	386	157	333	138	200	2473	22	389	1609	92
Growth Adj:	1.00	1.00	1.00	1.00	1.00	1.00	1.00	1.00	1.00	1.00	1.00	1.00
Initial Bse:	18	265	386	157	333	138	200	2473	22	389	1609	92
Added Vol:	0	0	0	0	0	0	0	0	0	0	0	0
PasserByVol:	0	0	0	0	0	0	0	0	0	0	0	0
Initial Fut:	18	265	386	157	333	138	200	2473	22	389	1609	92
User Adj:	1.00	1.00	1.00	1.00	1.00	1.00	1.00	1.00	1.00	1.00	1.00	1.00
PHF Adj:	1.00	1.00	1.00	1.00	1.00	1.00	1.00	1.00	1.00	1.00	1.00	1.00
PHF Volume:	18	265	386	157	333	138	200	2473	22	389	1609	92
Reduct Vol:	0	0	0	0	0	0	0	0	0	0	0	0
Reduced Vol:	18	265	386	157	333	138	200	2473	22	389	1609	92
PCE Adj:	1.00	1.00	1.00	1.00	1.00	1.00	1.00	1.00	1.00	1.00	1.00	1.00
MLF Adj:	1.00	1.00	1.00	1.00	1.00	1.00	1.00	1.00	1.00	1.00	1.00	1.00
FinalVolume:	18	265	386	157	333	138	200	2473	22	389	1609	92
Saturation Flow Module:																		
Sat/Lane:	1900	1900	1900	1900	1900	1900	1900	1900	1900	1900	1900	1900
Adjustment:	0.95	1.00	0.85	0.95	1.00	0.85	0.95	0.91	0.91	0.95	0.90	0.90
Lanes:	1.00	1.00	1.00	1.00	1.00	1.00	1.00	2.97	0.03	1.00	2.84	0.16
Final Sat.:	1805	1900	1615	1805	1900	1615	1805	5136	46	1805	4867	278
Capacity Analysis Module:																		
Vol/Sat:	0.01	0.14	0.24	0.09	0.18	0.09	0.11	0.48	0.48	0.22	0.33	0.33
Crit Moves:	****				****			****		****		
Green/Cycle:	0.07	0.14	0.33	0.09	0.15	0.15	0.15	0.43	0.43	0.19	0.46	0.46
Volume/Cap:	0.14	1.01	0.73	1.01	1.13	0.55	0.72	1.13	1.13	1.13	0.72	0.72
Delay/Veh:	44.2	101	34.6	119.8	136	41.7	48.9	94.8	94.8	130.1	22.8	22.8
User DelAdj:	1.00	1.00	1.00	1.00	1.00	1.00	1.00	1.00	1.00	1.00	1.00	1.00
AdjDel/Veh:	44.2	101	34.6	119.8	136	41.7	48.9	94.8	94.8	130.1	22.8	22.8
LOS by Move:	D	F	C	F	F	D	D	F	F	F	C	C
HCM2kAvgQ:	1	13	12	9	19	5	7	45	45	21	16	16

Note: Queue reported is the number of cars per lane.

Traffix 7.9.0415 (c) 2007 Dowling Assoc. Licensed to MMA, LONG BEACH, CA

Overlook Parkway Extension
Future Alt 1 (Gates Closed - No Overlook)
PM Peak Hour

Level Of Service Computation Report
2000 HCM Operations Method (Future Volume Alternative)

Intersection #13 Alessandro Blvd/Arlington Ave

Cycle (sec):	100	Critical Vol./Cap.(X):	1.231
Loss Time (sec):	16 (Y+R=4.0 sec)	Average Delay (sec/veh):	104.4
Optimal Cycle:	130	Level Of Service:	F

Street Name:	Alessandro Blvd									Arlington Ave								
Approach:	North Bound			South Bound			East Bound			West Bound		
Movement:	L	T	R	L	T	R	L	T	R	L	T	R	L	T	R	L	T	R
Control:	Protected			Protected			Protected			Protected		
Rights:	Ovl			Include			Ovl			Ovl		
Min. Green:	7	7	7	7	7	7	7	7	7	7	7	7
Lanes:	2 0	2 0	1	2 0	2 1	0	1 0	2 0	2	2 0	2 0	1
Volume Module:																		
Base Vol:	1236	936	132	354	1422	47	78	928	1914	267	787	244
Growth Adj:	1.00	1.00	1.00	1.00	1.00	1.00	1.00	1.00	1.00	1.00	1.00	1.00
Initial Bse:	1236	936	132	354	1422	47	78	928	1914	267	787	244
Added Vol:	0	0	0	0	0	0	0	0	0	0	0	0
PasserByVol:	0	0	0	0	0	0	0	0	0	0	0	0
Initial Fut:	1236	936	132	354	1422	47	78	928	1914	267	787	244
User Adj:	1.00	1.00	1.00	1.00	1.00	1.00	1.00	1.00	1.00	1.00	1.00	1.00
PHF Adj:	1.00	1.00	1.00	1.00	1.00	1.00	1.00	1.00	1.00	1.00	1.00	1.00
PHF Volume:	1236	936	132	354	1422	47	78	928	1914	267	787	244
Reduct Vol:	0	0	0	0	0	0	0	0	0	0	0	0
Reduced Vol:	1236	936	132	354	1422	47	78	928	1914	267	787	244
PCE Adj:	1.00	1.00	1.00	1.00	1.00	1.00	1.00	1.00	1.00	1.00	1.00	1.00
MLF Adj:	1.00	1.00	1.00	1.00	1.00	1.00	1.00	1.00	1.00	1.00	1.00	1.00
FinalVolume:	1236	936	132	354	1422	47	78	928	1914	267	787	244
Saturation Flow Module:																		
Sat/Lane:	1900	1900	1900	1900	1900	1900	1900	1900	1900	1900	1900	1900
Adjustment:	0.92	0.95	0.85	0.92	0.91	0.91	0.95	0.95	0.75	0.92	0.95	0.85
Lanes:	2.00	2.00	1.00	2.00	2.90	0.10	1.00	2.00	2.00	2.00	2.00	1.00
Final Sat.:	3502	3610	1615	3502	4996	165	1805	3610	2842	3502	3610	1615
Capacity Analysis Module:																		
Vol/Sat:	0.35	0.26	0.08	0.10	0.28	0.28	0.04	0.26	0.67	0.08	0.22	0.15
Crit Moves:	****				****				****	****		
Green/Cycle:	0.28	0.37	0.44	0.14	0.23	0.23	0.08	0.26	0.54	0.07	0.25	0.39
Volume/Cap:	1.24	0.70	0.19	0.70	1.24	1.24	0.54	1.00	1.24	1.09	0.88	0.39
Delay/Veh:	154.3	28.6	17.3	45.2	156	155.7	48.5	66.1	138.5	129.9	46.2	22.2
User DelAdj:	1.00	1.00	1.00	1.00	1.00	1.00	1.00	1.00	1.00	1.00	1.00	1.00
AdjDel/Veh:	154.3	28.6	17.3	45.2	156	155.7	48.5	66.1	138.5	129.9	46.2	22.2
LOS by Move:	F	C	B	D	F	F	D	E	F	F	D	C
HCM2kAvgQ:	37	14	2	7	32	32	3	21	61	9	16	5

Note: Queue reported is the number of cars per lane.

Traffix 7.9.0415 (c) 2007 Dowling Assoc. Licensed to MMA, LONG BEACH, CA

Overlook Parkway Extension
Future Alt 1 (Gates Closed - No Overlook)
PM Peak Hour

Level Of Service Computation Report
2000 HCM Operations Method (Future Volume Alternative)

Intersection #14 Alessandro Blvd/Overlook Pkwy

Cycle (sec):	100	Critical Vol./Cap.(X):	1.077
Loss Time (sec):	16 (Y+R=4.0 sec)	Average Delay (sec/veh):	88.7
Optimal Cycle:	130	Level Of Service:	F

Street Name:	Alessandro Blvd						Overlook Pkwy					
Approach:	North Bound			South Bound			East Bound			West Bound		
Movement:	L - T - R			L - T - R			L - T - R			L - T - R		
Control:	Protected			Protected			Protected			Protected		
Rights:	Include			Include			Include			Include		
Min. Green:	7	7	7	7	7	7	7	7	7	7	7	7
Lanes:	1 0	3 0	1	1 0	2 1	0	1 0	1 1	0	2 0	1 1	0
Volume Module:												
Base Vol:	10	1885	901	96	2750	17	24	16	8	1004	24	43
Growth Adj:	1.00	1.00	1.00	1.00	1.00	1.00	1.00	1.00	1.00	1.00	1.00	1.00
Initial Bse:	10	1885	901	96	2750	17	24	16	8	1004	24	43
Added Vol:	0	0	0	0	0	0	0	0	0	0	0	0
PasserByVol:	0	0	0	0	0	0	0	0	0	0	0	0
Initial Fut:	10	1885	901	96	2750	17	24	16	8	1004	24	43
User Adj:	1.00	1.00	1.00	1.00	1.00	1.00	1.00	1.00	1.00	1.00	1.00	1.00
PHF Adj:	1.00	1.00	1.00	1.00	1.00	1.00	1.00	1.00	1.00	1.00	1.00	1.00
PHF Volume:	10	1885	901	96	2750	17	24	16	8	1004	24	43
Reduct Vol:	0	0	0	0	0	0	0	0	0	0	0	0
Reduced Vol:	10	1885	901	96	2750	17	24	16	8	1004	24	43
PCE Adj:	1.00	1.00	1.00	1.00	1.00	1.00	1.00	1.00	1.00	1.00	1.00	1.00
MLF Adj:	1.00	1.00	1.00	1.00	1.00	1.00	1.00	1.00	1.00	1.00	1.00	1.00
FinalVolume:	10	1885	901	96	2750	17	24	16	8	1004	24	43
Saturation Flow Module:												
Sat/Lane:	1900	1900	1900	1900	1900	1900	1900	1900	1900	1900	1900	1900
Adjustment:	0.95	0.91	0.85	0.95	0.91	0.91	0.95	0.90	0.90	0.92	0.86	0.86
Lanes:	1.00	3.00	1.00	1.00	2.98	0.02	1.00	1.33	0.67	2.00	1.00	1.00
Final Sat.:	1805	5187	1615	1805	5150	32	1805	2286	1143	3502	1632	1632
Capacity Analysis Module:												
Vol/Sat:	0.01	0.36	0.56	0.05	0.53	0.53	0.01	0.01	0.01	0.29	0.01	0.03
Crit Moves:			****	****				****		****		
Green/Cycle:	0.07	0.46	0.46	0.07	0.46	0.46	0.15	0.07	0.07	0.24	0.15	0.15
Volume/Cap:	0.08	0.79	1.21	0.76	1.15	1.15	0.09	0.10	0.10	1.21	0.10	0.17
Delay/Veh:	43.8	24.5	132.3	68.8	102	101.8	36.4	43.7	43.7	142.4	36.4	37.0
User DelAdj:	1.00	1.00	1.00	1.00	1.00	1.00	1.00	1.00	1.00	1.00	1.00	1.00
AdjDel/Veh:	43.8	24.5	132.3	68.8	102	101.8	36.4	43.7	43.7	142.4	36.4	37.0
LOS by Move:	D	C	F	E	F	F	D	D	D	F	D	D
HCM2kAvgQ:	0	19	49	5	51	51	1	0	0	30	1	1

Note: Queue reported is the number of cars per lane.

Traffix 7.9.0415 (c) 2007 Dowling Assoc. Licensed to MMA, LONG BEACH, CA

Overlook Parkway Extension
Future Alt 1 (Gates Closed - No Overlook)
PM Peak Hour

Level Of Service Computation Report
2000 HCM Operations Method (Future Volume Alternative)

Intersection #15 Alessandro Blvd/Trautwein Rd

Cycle (sec):	100	Critical Vol./Cap.(X):	0.831
Loss Time (sec):	12 (Y+R=4.0 sec)	Average Delay (sec/veh):	28.4
Optimal Cycle:	85	Level Of Service:	C

Street Name:	Alessandro Blvd						Trautwein Rd					
Approach:	North Bound			South Bound			East Bound			West Bound		
Movement:	L - T - R			L - T - R			L - T - R			L - T - R		
Control:	Protected			Protected			Protected			Protected		
Rights:	Include			Ignore			Ignore			Include		
Min. Green:	7	7	7	7	7	7	7	7	7	7	7	7
Lanes:	2 0	3 0	0	0 0	3 0	1	3 0	0 0	1	0 0	0 0	0
Volume Module:												
Base Vol:	245	1443	0	0	2092	1468	1353	0	191	0	0	0
Growth Adj:	1.00	1.00	1.00	1.00	1.00	1.00	1.00	1.00	1.00	1.00	1.00	1.00
Initial Bse:	245	1443	0	0	2092	1468	1353	0	191	0	0	0
Added Vol:	0	0	0	0	0	0	0	0	0	0	0	0
PasserByVol:	0	0	0	0	0	0	0	0	0	0	0	0
Initial Fut:	245	1443	0	0	2092	1468	1353	0	191	0	0	0
User Adj:	1.00	1.00	1.00	1.00	1.00	0.00	1.00	1.00	0.00	1.00	1.00	1.00
PHF Adj:	1.00	1.00	1.00	1.00	1.00	0.00	1.00	1.00	0.00	1.00	1.00	1.00
PHF Volume:	245	1443	0	0	2092	0	1353	0	0	0	0	0
Reduct Vol:	0	0	0	0	0	0	0	0	0	0	0	0
Reduced Vol:	245	1443	0	0	2092	0	1353	0	0	0	0	0
PCE Adj:	1.00	1.00	1.00	1.00	1.00	0.00	1.00	1.00	0.00	1.00	1.00	1.00
MLF Adj:	1.00	1.00	1.00	1.00	1.00	0.00	1.00	1.00	0.00	1.00	1.00	1.00
FinalVolume:	245	1443	0	0	2092	0	1353	0	0	0	0	0
Saturation Flow Module:												
Sat/Lane:	1900	1900	1900	1900	1900	1900	1900	1900	1900	1900	1900	1900
Adjustment:	0.92	0.91	1.00	1.00	0.91	1.00	0.92	1.00	1.00	1.00	1.00	1.00
Lanes:	2.00	3.00	0.00	0.00	3.00	1.00	3.00	0.00	1.00	0.00	0.00	0.00
Final Sat.:	3502	5187	0	0	5187	1900	5253	0	1900	0	0	0
Capacity Analysis Module:												
Vol/Sat:	0.07	0.28	0.00	0.00	0.40	0.00	0.26	0.00	0.00	0.00	0.00	0.00
Crit Moves:	****				****		****					
Green/Cycle:	0.08	0.46	0.00	0.00	0.49	0.00	0.31	0.00	0.00	0.00	0.00	0.00
Volume/Cap:	0.83	0.61	0.00	0.00	0.83	0.00	0.83	0.00	0.00	0.00	0.00	0.00
Delay/Veh:	62.8	21.0	0.0	0.0	24.6	0.0	35.8	0.0	0.0	0.0	0.0	0.0
User DelAdj:	1.00	1.00	1.00	1.00	1.00	1.00	1.00	1.00	1.00	1.00	1.00	1.00
AdjDel/Veh:	62.8	21.0	0.0	0.0	24.6	0.0	35.8	0.0	0.0	0.0	0.0	0.0
LOS by Move:	E	C	A	A	C	A	D	A	A	A	A	A
HCM2kAvgQ:	6	13	0	0	22	0	16	0	0	0	0	0

Note: Queue reported is the number of cars per lane.

Traffix 7.9.0415 (c) 2007 Dowling Assoc. Licensed to MMA, LONG BEACH, CA

Overlook Parkway Extension
Future Alt 1 (Gates Closed - No Overlook)
PM Peak Hour

Level Of Service Computation Report
2000 HCM 4-Way Stop Method (Future Volume Alternative)

Intersection #16 Crystal View Ter/Overlook Pkwy

Cycle (sec):	100	Critical Vol./Cap.(X):	0.006
Loss Time (sec):	0 (Y+R=4.0 sec)	Average Delay (sec/veh):	7.0
Optimal Cycle:	0	Level Of Service:	A

Street Name:	Crystal View Ter							Overlook Pkwy					
Approach:	North Bound			South Bound			East Bound			West Bound			
Movement:	L	T	R	L	T	R	L	T	R	L	T	R	
Control:	Stop Sign			Stop Sign			Stop Sign			Stop Sign			
Rights:	Include			Include			Include			Include			
Min. Green:	7	7	7	7	7	7	7	7	7	7	7	7	
Lanes:	1 0	0	0 0	0 0	1! 0	0	1 0	1	1 0	1 0	1	1 0	
Volume Module:													
Base Vol:	5	0	0	0	0	0	3	0	6	0	0	0	
Growth Adj:	1.00	1.00	1.00	1.00	1.00	1.00	1.00	1.00	1.00	1.00	1.00	1.00	
Initial Bse:	5	0	0	0	0	0	3	0	6	0	0	0	
Added Vol:	0	0	0	0	0	0	0	0	0	0	0	0	
PasserByVol:	0	0	0	0	0	0	0	0	0	0	0	0	
Initial Fut:	5	0	0	0	0	0	3	0	6	0	0	0	
User Adj:	1.00	1.00	1.00	1.00	1.00	1.00	1.00	1.00	1.00	1.00	1.00	1.00	
PHF Adj:	1.00	1.00	1.00	1.00	1.00	1.00	1.00	1.00	1.00	1.00	1.00	1.00	
PHF Volume:	5	0	0	0	0	0	3	0	6	0	0	0	
Reduct Vol:	0	0	0	0	0	0	0	0	0	0	0	0	
Reduced Vol:	5	0	0	0	0	0	3	0	6	0	0	0	
PCE Adj:	1.00	1.00	1.00	1.00	1.00	1.00	1.00	1.00	1.00	1.00	1.00	1.00	
MLF Adj:	1.00	1.00	1.00	1.00	1.00	1.00	1.00	1.00	1.00	1.00	1.00	1.00	
FinalVolume:	5	0	0	0	0	0	3	0	6	0	0	0	
Saturation Flow Module:													
Adjustment:	1.00	1.00	1.00	1.00	1.00	1.00	1.00	1.00	1.00	1.00	1.00	1.00	
Lanes:	1.00	0.00	0.00	0.00	1.00	0.00	1.00	1.00	1.00	1.00	2.00	0.00	
Final Sat.:	872	0	0	0	916	0	718	798	943	718	1591	0	
Capacity Analysis Module:													
Vol/Sat:	0.01	xxxx	xxxx	xxxx	0.00	xxxx	0.00	0.00	0.01	0.00	0.00	xxxx	
Crit Moves:	****				****				****		****		
Delay/Veh:	7.1	0.0	0.0	0.0	0.0	0.0	7.7	0.0	6.5	0.0	0.0	0.0	
Delay Adj:	1.00	1.00	1.00	1.00	1.00	1.00	1.00	1.00	1.00	1.00	1.00	1.00	
AdjDel/Veh:	7.1	0.0	0.0	0.0	0.0	0.0	7.7	0.0	6.5	0.0	0.0	0.0	
LOS by Move:	A	*	*	*	*	*	A	*	A	*	*	*	
ApproachDel:	7.1			xxxxxx			6.9			xxxxxx			
Delay Adj:	1.00			xxxxx			1.00			xxxxx			
ApprAdjDel:	7.1			xxxxxx			6.9			xxxxxx			
LOS by Appr:	A			*			A			*			
AllWayAvgQ:	0.0	0.0	0.0	0.0	0.0	0.0	0.0	0.0	0.0	0.0	0.0	0.0	

Overlook Parkway Extension
Future Alt 1 (Gates Closed - No Overlook)
PM Peak Hour

Note: Queue reported is the number of cars per lane.

Overlook Parkway Extension
Future Alt 1 (Gates Closed - No Overlook)
PM Peak Hour

Level Of Service Computation Report
2000 HCM Unsignalized Method (Future Volume Alternative)

Intersection #17 Kingdom Dr/Overlook Pkwy

Average Delay (sec/veh): 2.9 Worst Case Level Of Service: A[8.9]

Street Name:	Kingdom Dr						Overlook Pkwy					
Approach:	North Bound			South Bound			East Bound			West Bound		
Movement:	L - T - R			L - T - R			L - T - R			L - T - R		
Control:	Stop Sign			Stop Sign			Uncontrolled			Uncontrolled		
Rights:	Include			Include			Include			Include		
Lanes:	0 0 1! 0 0			0 0 1! 0 0			1 0 1 1 0			1 0 1 1 0		
Volume Module:												
Base Vol:	38	0	3	0	0	0	3	11	73	0	7	0
Growth Adj:	1.00	1.00	1.00	1.00	1.00	1.00	1.00	1.00	1.00	1.00	1.00	1.00
Initial Bse:	38	0	3	0	0	0	3	11	73	0	7	0
Added Vol:	0	0	0	0	0	0	0	0	0	0	0	0
PasserByVol:	0	0	0	0	0	0	0	0	0	0	0	0
Initial Fut:	38	0	3	0	0	0	3	11	73	0	7	0
User Adj:	1.00	1.00	1.00	1.00	1.00	1.00	1.00	1.00	1.00	1.00	1.00	1.00
PHF Adj:	1.00	1.00	1.00	1.00	1.00	1.00	1.00	1.00	1.00	1.00	1.00	1.00
PHF Volume:	38	0	3	0	0	0	3	11	73	0	7	0
Reduct Vol:	0	0	0	0	0	0	0	0	0	0	0	0
FinalVolume:	38	0	3	0	0	0	3	11	73	0	7	0
Critical Gap Module:												
Critical Gp:	6.8	6.5	6.9	7.5	6.5	6.9	4.1	xxxx	xxxxx	xxxxx	xxxx	xxxxx
FollowUpTim:	3.5	4.0	3.3	3.5	4.0	3.3	2.2	xxxx	xxxxx	xxxxx	xxxx	xxxxx
Capacity Module:												
Cnflict Vol:	57	61	42	19	97	4	7	xxxx	xxxxx	xxxx	xxxx	xxxxx
Potent Cap.:	949	834	1026	999	797	1085	1627	xxxx	xxxxx	xxxx	xxxx	xxxxx
Move Cap.:	948	833	1026	994	795	1085	1627	xxxx	xxxxx	xxxx	xxxx	xxxxx
Volume/Cap:	0.04	0.00	0.00	0.00	0.00	0.00	0.00	xxxx	xxxx	xxxx	xxxx	xxxx
Level Of Service Module:												
2Way95thQ:	xxxx	xxxx	xxxxx	xxxx	xxxx	xxxxx	0.0	xxxx	xxxxx	xxxx	xxxx	xxxxx
Control Del:	xxxxx	xxxx	xxxxx	xxxxx	xxxx	xxxxx	7.2	xxxx	xxxxx	xxxxx	xxxx	xxxxx
LOS by Move:	*	*	*	*	*	*	A	*	*	*	*	*
Movement:	LT -	LTR -	RT	LT -	LTR -	RT	LT -	LTR -	RT	LT -	LTR -	RT
Shared Cap.:	xxxx	953	xxxxx	xxxx	0	xxxxx	xxxx	xxxx	xxxxx	xxxx	xxxx	xxxxx
SharedQueue:	xxxxx	0.1	xxxxx	xxxxx	xxxx	xxxxx	xxxxx	xxxx	xxxxx	xxxxx	xxxx	xxxxx
Shrd ConDel:	xxxxx	8.9	xxxxx	xxxxx	xxxx	xxxxx	xxxxx	xxxx	xxxxx	xxxxx	xxxx	xxxxx
Shared LOS:	*	A	*	*	*	*	*	*	*	*	*	*
ApproachDel:	8.9			xxxxxx			xxxxxx			xxxxxx		
ApproachLOS:	A			*			*			*		

Note: Queue reported is the number of cars per lane.

Overlook Parkway Extension
Future Alt 1 (Gates Closed - No Overlook)
PM Peak Hour

Level Of Service Computation Report
2000 HCM Unsignalized Method (Future Volume Alternative)

Intersection #18 Kingdom Dr/Green Orchard Pl

Average Delay (sec/veh): 1.9 Worst Case Level Of Service: A[8.5]

Street Name:	Kingdom Dr						Green Orchard Pl					
Approach:	North Bound			South Bound			East Bound			West Bound		
Movement:	L - T - R			L - T - R			L - T - R			L - T - R		
Control:	Uncontrolled			Uncontrolled			Stop Sign			Stop Sign		
Rights:	Include			Include			Include			Include		
Lanes:	0 0 0 1 0			0 1 0 0 0			0 0 0 0 0			0 0 1! 0 0		
Volume Module:												
Base Vol:	0	26	3	15	58	0	0	0	0	1	0	12
Growth Adj:	1.00	1.00	1.00	1.00	1.00	1.00	1.00	1.00	1.00	1.00	1.00	1.00
Initial Bse:	0	26	3	15	58	0	0	0	0	1	0	12
Added Vol:	0	0	0	0	0	0	0	0	0	0	0	0
PasserByVol:	0	0	0	0	0	0	0	0	0	0	0	0
Initial Fut:	0	26	3	15	58	0	0	0	0	1	0	12
User Adj:	1.00	1.00	1.00	1.00	1.00	1.00	1.00	1.00	1.00	1.00	1.00	1.00
PHF Adj:	1.00	1.00	1.00	1.00	1.00	1.00	1.00	1.00	1.00	1.00	1.00	1.00
PHF Volume:	0	26	3	15	58	0	0	0	0	1	0	12
Reduct Vol:	0	0	0	0	0	0	0	0	0	0	0	0
FinalVolume:	0	26	3	15	58	0	0	0	0	1	0	12
Critical Gap Module:												
Critical Gp:	xxxxx	xxxx	xxxxx	4.1	xxxx	xxxxx	xxxxx	xxxx	xxxxx	6.4	6.5	6.2
FollowUpTim:	xxxxx	xxxx	xxxxx	2.2	xxxx	xxxxx	xxxxx	xxxx	xxxxx	3.5	4.0	3.3
Capacity Module:												
Cnflict Vol:	xxxx	xxxx	xxxxx	29	xxxx	xxxxx	xxxx	xxxx	xxxxx	116	116	28
Potent Cap.:	xxxx	xxxx	xxxxx	1597	xxxx	xxxxx	xxxx	xxxx	xxxxx	886	778	1054
Move Cap.:	xxxx	xxxx	xxxxx	1597	xxxx	xxxxx	xxxx	xxxx	xxxxx	879	771	1054
Volume/Cap:	xxxx	xxxx	xxxx	0.01	xxxx	xxxx	xxxx	xxxx	xxxx	0.00	0.00	0.01
Level Of Service Module:												
2Way95thQ:	xxxx	xxxx	xxxxx	0.0	xxxx	xxxxx	xxxx	xxxx	xxxxx	xxxx	xxxx	xxxxx
Control Del:	xxxxx	xxxx	xxxxx	7.3	xxxx	xxxxx	xxxxx	xxxx	xxxxx	xxxxx	xxxx	xxxxx
LOS by Move:	*	*	*	A	*	*	*	*	*	*	*	*
Movement:	LT -	LTR -	RT	LT -	LTR -	RT	LT -	LTR -	RT	LT -	LTR -	RT
Shared Cap.:	xxxx	xxxx	xxxxx	xxxx	xxxx	xxxxx	xxxx	xxxx	xxxxx	xxxx	1038	xxxxx
SharedQueue:	xxxxx	xxxx	xxxxx	0.0	xxxx	xxxxx	xxxxx	xxxx	xxxxx	xxxxx	0.0	xxxxx
Shrd ConDel:	xxxxx	xxxx	xxxxx	7.3	xxxx	xxxxx	xxxxx	xxxx	xxxxx	xxxxx	8.5	xxxxx
Shared LOS:	*	*	*	A	*	*	*	*	*	*	A	*
ApproachDel:	xxxxxx			xxxxxx			xxxxxx			8.5		
ApproachLOS:	*			*			*			A		

Note: Queue reported is the number of cars per lane.

Overlook Parkway Extension
Future Alt 1 (Gates Closed - No Overlook)
PM Peak Hour

Level Of Service Computation Report
2000 HCM Operations Method (Future Volume Alternative)

Intersection #19 Trautwein Rd/John F. Kennedy Dr

Cycle (sec):	100	Critical Vol./Cap.(X):	0.908
Loss Time (sec):	16 (Y+R=4.0 sec)	Average Delay (sec/veh):	36.1
Optimal Cycle:	120	Level Of Service:	D

Street Name:	Trautwein Rd						John F. Kennedy Dr					
Approach:	North Bound			South Bound			East Bound			West Bound		
Movement:	L - T - R			L - T - R			L - T - R			L - T - R		
Control:	Protected			Protected			Protected			Protected		
Rights:	Include			Ovl			Include			Include		
Min. Green:	7	7	7	7	7	7	7	7	7	7	7	7
Lanes:	1 0	2 0	1	1 0	2 0	1	2 0	1 0	1	1 0	0 1	0
Volume Module:												
Base Vol:	59	1352	68	54	1778	610	679	56	161	59	29	46
Growth Adj:	1.00	1.00	1.00	1.00	1.00	1.00	1.00	1.00	1.00	1.00	1.00	1.00
Initial Bse:	59	1352	68	54	1778	610	679	56	161	59	29	46
Added Vol:	0	0	0	0	0	0	0	0	0	0	0	0
PasserByVol:	0	0	0	0	0	0	0	0	0	0	0	0
Initial Fut:	59	1352	68	54	1778	610	679	56	161	59	29	46
User Adj:	1.00	1.00	1.00	1.00	1.00	1.00	1.00	1.00	1.00	1.00	1.00	1.00
PHF Adj:	1.00	1.00	1.00	1.00	1.00	1.00	1.00	1.00	1.00	1.00	1.00	1.00
PHF Volume:	59	1352	68	54	1778	610	679	56	161	59	29	46
Reduct Vol:	0	0	0	0	0	0	0	0	0	0	0	0
Reduced Vol:	59	1352	68	54	1778	610	679	56	161	59	29	46
PCE Adj:	1.00	1.00	1.00	1.00	1.00	1.00	1.00	1.00	1.00	1.00	1.00	1.00
MLF Adj:	1.00	1.00	1.00	1.00	1.00	1.00	1.00	1.00	1.00	1.00	1.00	1.00
FinalVolume:	59	1352	68	54	1778	610	679	56	161	59	29	46
Saturation Flow Module:												
Sat/Lane:	1900	1900	1900	1900	1900	1900	1900	1900	1900	1900	1900	1900
Adjustment:	0.95	0.95	0.85	0.95	0.95	0.85	0.92	1.00	0.85	0.95	0.91	0.91
Lanes:	1.00	2.00	1.00	1.00	2.00	1.00	2.00	1.00	1.00	1.00	0.39	0.61
Final Sat.:	1805	3610	1615	1805	3610	1615	3502	1900	1615	1805	667	1058
Capacity Analysis Module:												
Vol/Sat:	0.03	0.37	0.04	0.03	0.49	0.38	0.19	0.03	0.10	0.03	0.04	0.04
Crit Moves:	****				****		****				****	
Green/Cycle:	0.07	0.48	0.48	0.09	0.50	0.70	0.20	0.16	0.16	0.11	0.07	0.07
Volume/Cap:	0.47	0.78	0.09	0.33	0.98	0.54	0.98	0.19	0.63	0.30	0.62	0.62
Delay/Veh:	47.4	23.7	14.0	43.9	41.1	7.8	69.2	36.9	44.6	41.7	54.8	54.8
User DelAdj:	1.00	1.00	1.00	1.00	1.00	1.00	1.00	1.00	1.00	1.00	1.00	1.00
AdjDel/Veh:	47.4	23.7	14.0	43.9	41.1	7.8	69.2	36.9	44.6	41.7	54.8	54.8
LOS by Move:	D	C	B	D	D	A	E	D	D	D	D	D
HCM2kAvgQ:	2	19	1	2	35	9	16	2	6	2	3	3

Note: Queue reported is the number of cars per lane.

Traffix 7.9.0415 (c) 2007 Dowling Assoc. Licensed to MMA, LONG BEACH, CA

Overlook Parkway Extension
Future Alt 1 (Gates Closed - No Overlook)
PM Peak Hour

Level Of Service Computation Report
2000 HCM Operations Method (Future Volume Alternative)

Intersection #20 Washington St/Bradley St

Cycle (sec):	100	Critical Vol./Cap.(X):	1.007
Loss Time (sec):	12 (Y+R=4.0 sec)	Average Delay (sec/veh):	60.4
Optimal Cycle:	130	Level Of Service:	E

Street Name:	Washington St						Bradley St					
Approach:	North Bound			South Bound			East Bound			West Bound		
Movement:	L - T - R			L - T - R			L - T - R			L - T - R		
Control:	Protected			Protected			Permitted			Permitted		
Rights:	Include			Include			Include			Include		
Min. Green:	7	7	7	7	7	7	7	7	7	7	7	7
Lanes:	1 0	1 1	0	1 0	1 1	0	0 0	1! 0	0	0 0	1! 0	0
Volume Module:												
Base Vol:	255	1250	44	413	1584	0	4	100	399	33	33	149
Growth Adj:	1.00	1.00	1.00	1.00	1.00	1.00	1.00	1.00	1.00	1.00	1.00	1.00
Initial Bse:	255	1250	44	413	1584	0	4	100	399	33	33	149
Added Vol:	0	0	0	0	0	0	0	0	0	0	0	0
PasserByVol:	0	0	0	0	0	0	0	0	0	0	0	0
Initial Fut:	255	1250	44	413	1584	0	4	100	399	33	33	149
User Adj:	1.00	1.00	1.00	1.00	1.00	1.00	1.00	1.00	1.00	1.00	1.00	1.00
PHF Adj:	1.00	1.00	1.00	1.00	1.00	1.00	1.00	1.00	1.00	1.00	1.00	1.00
PHF Volume:	255	1250	44	413	1584	0	4	100	399	33	33	149
Reduct Vol:	0	0	0	0	0	0	0	0	0	0	0	0
Reduced Vol:	255	1250	44	413	1584	0	4	100	399	33	33	149
PCE Adj:	1.00	1.00	1.00	1.00	1.00	1.00	1.00	1.00	1.00	1.00	1.00	1.00
MLF Adj:	1.00	1.00	1.00	1.00	1.00	1.00	1.00	1.00	1.00	1.00	1.00	1.00
FinalVolume:	255	1250	44	413	1584	0	4	100	399	33	33	149
Saturation Flow Module:												
Sat/Lane:	1900	1900	1900	1900	1900	1900	1900	1900	1900	1900	1900	1900
Adjustment:	0.95	0.95	0.95	0.95	0.95	0.95	0.89	0.89	0.89	0.70	0.70	0.70
Lanes:	1.00	1.93	0.07	1.00	2.00	0.00	0.01	0.20	0.79	0.15	0.15	0.70
Final Sat.:	1805	3470	122	1805	3610	0	13	337	1343	204	204	920
Capacity Analysis Module:												
Vol/Sat:	0.14	0.36	0.36	0.23	0.44	0.00	0.30	0.30	0.30	0.16	0.16	0.16
Crit Moves:		****		****				****				
Green/Cycle:	0.14	0.36	0.36	0.23	0.44	0.00	0.30	0.30	0.30	0.30	0.30	0.30
Volume/Cap:	0.99	1.01	1.01	1.01	0.99	0.00	1.01	1.01	1.01	0.55	0.55	0.55
Delay/Veh:	96.5	58.9	58.9	84.8	48.1	0.0	77.3	77.3	77.3	31.3	31.3	31.3
User DelAdj:	1.00	1.00	1.00	1.00	1.00	1.00	1.00	1.00	1.00	1.00	1.00	1.00
AdjDel/Veh:	96.5	58.9	58.9	84.8	48.1	0.0	77.3	77.3	77.3	31.3	31.3	31.3
LOS by Move:	F	E	E	F	D	A	E	E	E	C	C	C
HCM2kAvgQ:	13	28	28	19	33	0	22	22	22	6	6	6

Note: Queue reported is the number of cars per lane.

Traffix 7.9.0415 (c) 2007 Dowling Assoc. Licensed to MMA, LONG BEACH, CA

Overlook Parkway Extension
Future Alt 1 (Gates Closed - No Overlook)
PM Peak Hour

Level Of Service Computation Report
2000 HCM Operations Method (Future Volume Alternative)

Intersection #21 Alessandro Blvd/Via Vista Dr

Cycle (sec): 100 | Critical Vol./Cap.(X): 0.908
Loss Time (sec): 16 (Y+R=4.0 sec) | Average Delay (sec/veh): 24.3
Optimal Cycle: 120 | Level Of Service: C

Street Name:	Alessandro Blvd						Via Vista Dr					
Approach:	North Bound			South Bound			East Bound			West Bound		
Movement:	L - T - R			L - T - R			L - T - R			L - T - R		
Control:	Protected			Protected			Protected			Protected		
Rights:	Include			Include			Include			Include		
Min. Green:	7	7	7	7	7	7	7	7	7	7	7	7
Lanes:	1 0	2 1	0	1 0	2 1	0	1 0	1 0	1	1 0	1 0	1
Volume Module:												
Base Vol:	114	1875	13	89	2723	292	116	28	54	10	45	73
Growth Adj:	1.00	1.00	1.00	1.00	1.00	1.00	1.00	1.00	1.00	1.00	1.00	1.00
Initial Bse:	114	1875	13	89	2723	292	116	28	54	10	45	73
Added Vol:	0	0	0	0	0	0	0	0	0	0	0	0
PasserByVol:	0	0	0	0	0	0	0	0	0	0	0	0
Initial Fut:	114	1875	13	89	2723	292	116	28	54	10	45	73
User Adj:	1.00	1.00	1.00	1.00	1.00	1.00	1.00	1.00	1.00	1.00	1.00	1.00
PHF Adj:	1.00	1.00	1.00	1.00	1.00	1.00	1.00	1.00	1.00	1.00	1.00	1.00
PHF Volume:	114	1875	13	89	2723	292	116	28	54	10	45	73
Reduct Vol:	0	0	0	0	0	0	0	0	0	0	0	0
Reduced Vol:	114	1875	13	89	2723	292	116	28	54	10	45	73
PCE Adj:	1.00	1.00	1.00	1.00	1.00	1.00	1.00	1.00	1.00	1.00	1.00	1.00
MLF Adj:	1.00	1.00	1.00	1.00	1.00	1.00	1.00	1.00	1.00	1.00	1.00	1.00
FinalVolume:	114	1875	13	89	2723	292	116	28	54	10	45	73
Saturation Flow Module:												
Sat/Lane:	1900	1900	1900	1900	1900	1900	1900	1900	1900	1900	1900	1900
Adjustment:	0.95	0.91	0.91	0.95	0.90	0.90	0.95	1.00	0.85	0.95	1.00	0.85
Lanes:	1.00	2.98	0.02	1.00	2.71	0.29	1.00	1.00	1.00	1.00	1.00	1.00
Final Sat.:	1805	5146	36	1805	4614	495	1805	1900	1615	1805	1900	1615
Capacity Analysis Module:												
Vol/Sat:	0.06	0.36	0.36	0.05	0.59	0.59	0.06	0.01	0.03	0.01	0.02	0.05
Crit Moves:	****				****		****					****
Green/Cycle:	0.07	0.59	0.59	0.11	0.63	0.63	0.07	0.07	0.07	0.07	0.07	0.07
Volume/Cap:	0.90	0.62	0.62	0.44	0.94	0.94	0.92	0.21	0.48	0.08	0.34	0.65
Delay/Veh:	97.4	13.8	13.8	42.9	22.8	22.8	101.6	44.7	47.9	43.8	45.8	57.5
User DelAdj:	1.00	1.00	1.00	1.00	1.00	1.00	1.00	1.00	1.00	1.00	1.00	1.00
AdjDel/Veh:	97.4	13.8	13.8	42.9	22.8	22.8	101.6	44.7	47.9	43.8	45.8	57.5
LOS by Move:	F	B	B	D	C	C	F	D	D	D	D	E
HCM2kAvgQ:	6	14	14	3	36	36	6	1	2	0	2	3

Note: Queue reported is the number of cars per lane.

Traffix 7.9.0415 (c) 2007 Dowling Assoc. Licensed to MMA, LONG BEACH, CA

Overlook Parkway Extension
Future Alt 1 (Gates Closed - No Overlook)
PM Peak Hour

Level Of Service Computation Report
2000 HCM 4-Way Stop Method (Future Volume Alternative)

Intersection #23 Mary St/Hawarden Dr

Cycle (sec): 100 | Critical Vol./Cap.(X): 0.228
Loss Time (sec): 0 (Y+R=4.0 sec) | Average Delay (sec/veh): 7.9
Optimal Cycle: 0 | Level Of Service: A

Street Name:	Mary St						Hawarden Dr					
Approach:	North Bound			South Bound			East Bound			West Bound		
Movement:	L - T - R			L - T - R			L - T - R			L - T - R		
Control:	Stop Sign			Stop Sign			Stop Sign			Stop Sign		
Rights:	Include			Include			Include			Include		
Min. Green:	7	7	7	7	7	7	7	7	7	7	7	7
Lanes:	0 1	0 0	0	0 0	0 1	0	0 0	1! 0	0	0 0	0 0	0
Volume Module:												
Base Vol:	5	50	0	0	131	79	48	0	7	0	0	0
Growth Adj:	1.00	1.00	1.00	1.00	1.00	1.00	1.00	1.00	1.00	1.00	1.00	1.00
Initial Bse:	5	50	0	0	131	79	48	0	7	0	0	0
Added Vol:	0	0	0	0	0	0	0	0	0	0	0	0
PasserByVol:	0	0	0	0	0	0	0	0	0	0	0	0
Initial Fut:	5	50	0	0	131	79	48	0	7	0	0	0
User Adj:	1.00	1.00	1.00	1.00	1.00	1.00	1.00	1.00	1.00	1.00	1.00	1.00
PHF Adj:	1.00	1.00	1.00	1.00	1.00	1.00	1.00	1.00	1.00	1.00	1.00	1.00
PHF Volume:	5	50	0	0	131	79	48	0	7	0	0	0
Reduct Vol:	0	0	0	0	0	0	0	0	0	0	0	0
Reduced Vol:	5	50	0	0	131	79	48	0	7	0	0	0
PCE Adj:	1.00	1.00	1.00	1.00	1.00	1.00	1.00	1.00	1.00	1.00	1.00	1.00
MLF Adj:	1.00	1.00	1.00	1.00	1.00	1.00	1.00	1.00	1.00	1.00	1.00	1.00
FinalVolume:	5	50	0	0	131	79	48	0	7	0	0	0
Saturation Flow Module:												
Adjustment:	1.00	1.00	1.00	1.00	1.00	1.00	1.00	1.00	1.00	1.00	1.00	1.00
Lanes:	0.09	0.91	0.00	0.00	0.62	0.38	0.87	0.00	0.13	0.00	0.00	0.00
Final Sat.:	76	758	0	0	576	347	664	0	97	0	0	0
Capacity Analysis Module:												
Vol/Sat:	0.07	0.07	xxxx	xxxx	0.23	0.23	0.07	xxxx	0.07	xxxx	xxxx	xxxx
Crit Moves:		****				****	****					
Delay/Veh:	7.5	7.5	0.0	0.0	8.0	8.0	7.8	0.0	7.8	0.0	0.0	0.0
Delay Adj:	1.00	1.00	1.00	1.00	1.00	1.00	1.00	1.00	1.00	1.00	1.00	1.00
AdjDel/Veh:	7.5	7.5	0.0	0.0	8.0	8.0	7.8	0.0	7.8	0.0	0.0	0.0
LOS by Move:	A	A	*	*	A	A	A	*	A	*	*	*
ApproachDel:	7.5			8.0			7.8			xxxxxx		
Delay Adj:	1.00			1.00			1.00			xxxxx		
ApprAdjDel:	7.5			8.0			7.8			xxxxxx		
LOS by Appr:	A			A			A			*		
AllWayAvgQ:	0.1	0.1	0.1	0.3	0.3	0.3	0.1	0.1	0.1	0.0	0.0	0.0

Traffix 7.9.0415 (c) 2007 Dowling Assoc. Licensed to MMA, LONG BEACH, CA

Overlook Parkway Extension
Future Alt 1 (Gates Closed - No Overlook)
PM Peak Hour

Note: Queue reported is the number of cars per lane.

Overlook Parkway Extension
Future Alt 1 (Gates Closed - No Overlook)
PM Peak Hour

Level Of Service Computation Report
2000 HCM 4-Way Stop Method (Future Volume Alternative)

Intersection #24 Hawarden Dr/Overlook Pkwy

Cycle (sec):	100	Critical Vol./Cap.(X):	0.120
Loss Time (sec):	0 (Y+R=4.0 sec)	Average Delay (sec/veh):	8.0
Optimal Cycle:	0	Level Of Service:	A

Street Name:	Hawarden Dr						Overlook Pkwy					
Approach:	North Bound			South Bound			East Bound			West Bound		
Movement:	L	- T	- R	L	- T	- R	L	- T	- R	L	- T	- R
Control:	Stop Sign			Stop Sign			Stop Sign			Stop Sign		
Rights:	Include			Include			Include			Include		
Min. Green:	7	7	7	7	7	7	7	7	7	7	7	7
Lanes:	0 0	1! 0	0	0 0	1! 0	0	1 0	1 1	0	1 0	1 1	0
Volume Module:												
Base Vol:	29	23	9	18	40	13	11	109	67	7	96	5
Growth Adj:	1.00	1.00	1.00	1.00	1.00	1.00	1.00	1.00	1.00	1.00	1.00	1.00
Initial Bse:	29	23	9	18	40	13	11	109	67	7	96	5
Added Vol:	0	0	0	0	0	0	0	0	0	0	0	0
PasserByVol:	0	0	0	0	0	0	0	0	0	0	0	0
Initial Fut:	29	23	9	18	40	13	11	109	67	7	96	5
User Adj:	1.00	1.00	1.00	1.00	1.00	1.00	1.00	1.00	1.00	1.00	1.00	1.00
PHF Adj:	1.00	1.00	1.00	1.00	1.00	1.00	1.00	1.00	1.00	1.00	1.00	1.00
PHF Volume:	29	23	9	18	40	13	11	109	67	7	96	5
Reduct Vol:	0	0	0	0	0	0	0	0	0	0	0	0
Reduced Vol:	29	23	9	18	40	13	11	109	67	7	96	5
PCE Adj:	1.00	1.00	1.00	1.00	1.00	1.00	1.00	1.00	1.00	1.00	1.00	1.00
MLF Adj:	1.00	1.00	1.00	1.00	1.00	1.00	1.00	1.00	1.00	1.00	1.00	1.00
FinalVolume:	29	23	9	18	40	13	11	109	67	7	96	5
Saturation Flow Module:												
Adjustment:	1.00	1.00	1.00	1.00	1.00	1.00	1.00	1.00	1.00	1.00	1.00	1.00
Lanes:	0.47	0.38	0.15	0.25	0.57	0.18	1.00	1.24	0.76	1.00	1.90	0.10
Final Sat.:	350	277	108	190	421	137	653	911	613	643	1353	71
Capacity Analysis Module:												
Vol/Sat:	0.08	0.08	0.08	0.09	0.09	0.09	0.02	0.12	0.11	0.01	0.07	0.07
Crit Moves:		****		****				****			****	
Delay/Veh:	8.0	8.0	8.0	8.0	8.0	8.0	8.2	8.1	7.6	8.2	8.0	7.9
Delay Adj:	1.00	1.00	1.00	1.00	1.00	1.00	1.00	1.00	1.00	1.00	1.00	1.00
AdjDel/Veh:	8.0	8.0	8.0	8.0	8.0	8.0	8.2	8.1	7.6	8.2	8.0	7.9
LOS by Move:	A	A	A	A	A	A	A	A	A	A	A	A
ApproachDel:		8.0			8.0			7.9			8.0	
Delay Adj:		1.00			1.00			1.00			1.00	
ApprAdjDel:		8.0			8.0			7.9			8.0	
LOS by Appr:		A			A			A			A	
AllWayAvgQ:	0.1	0.1	0.1	0.1	0.1	0.1	0.0	0.1	0.1	0.0	0.1	0.1

Overlook Parkway Extension
Future Alt 1 (Gates Closed - No Overlook)
PM Peak Hour

Note: Queue reported is the number of cars per lane.

Overlook Parkway Extension
Future Alt 1 (Gates Closed - No Overlook)
PM Peak Hour

Level Of Service Computation Report
2000 HCM 4-Way Stop Method (Future Volume Alternative)

Intersection #25 Crystal View Ter/Berry Rd

Cycle (sec):	100	Critical Vol./Cap.(X):	0.413
Loss Time (sec):	0 (Y+R=4.0 sec)	Average Delay (sec/veh):	9.5
Optimal Cycle:	0	Level Of Service:	A

Street Name:	Crystal View Ter							Berry Rd					
Approach:	North Bound			South Bound			East Bound			West Bound			
Movement:	L	- T	- R	L	- T	- R	L	- T	- R	L	- T	- R	
Control:	Stop Sign			Stop Sign			Stop Sign			Stop Sign			
Rights:	Include			Include			Include			Include			
Min. Green:	7	7	7	7	7	7	7	7	7	7	7	7	
Lanes:	0 0	1! 0	0	0 1	0 0	0	0 0	0 1	0	0 0	1! 0	0	
Volume Module:													
Base Vol:	3	4	122	2	6	0	0	3	8	320	5	8	
Growth Adj:	1.00	1.00	1.00	1.00	1.00	1.00	1.00	1.00	1.00	1.00	1.00	1.00	
Initial Bse:	3	4	122	2	6	0	0	3	8	320	5	8	
Added Vol:	0	0	0	0	0	0	0	0	0	0	0	0	
PasserByVol:	0	0	0	0	0	0	0	0	0	0	0	0	
Initial Fut:	3	4	122	2	6	0	0	3	8	320	5	8	
User Adj:	1.00	1.00	1.00	1.00	1.00	1.00	1.00	1.00	1.00	1.00	1.00	1.00	
PHF Adj:	1.00	1.00	1.00	1.00	1.00	1.00	1.00	1.00	1.00	1.00	1.00	1.00	
PHF Volume:	3	4	122	2	6	0	0	3	8	320	5	8	
Reduct Vol:	0	0	0	0	0	0	0	0	0	0	0	0	
Reduced Vol:	3	4	122	2	6	0	0	3	8	320	5	8	
PCE Adj:	1.00	1.00	1.00	1.00	1.00	1.00	1.00	1.00	1.00	1.00	1.00	1.00	
MLF Adj:	1.00	1.00	1.00	1.00	1.00	1.00	1.00	1.00	1.00	1.00	1.00	1.00	
FinalVolume:	3	4	122	2	6	0	0	3	8	320	5	8	
Saturation Flow Module:													
Adjustment:	1.00	1.00	1.00	1.00	1.00	1.00	1.00	1.00	1.00	1.00	1.00	1.00	
Lanes:	0.02	0.03	0.95	0.25	0.75	0.00	0.00	0.27	0.73	0.96	0.02	0.02	
Final Sat.:	19	25	775	172	517	0	0	229	610	775	12	19	
Capacity Analysis Module:													
Vol/Sat:	0.16	0.16	0.16	0.01	0.01	xxxx	xxxx	0.01	0.01	0.41	0.41	0.41	
Crit Moves:		****			****			****			****		
Delay/Veh:	7.8	7.8	7.8	7.9	7.9	0.0	0.0	7.1	7.1	10.3	10.3	10.3	
Delay Adj:	1.00	1.00	1.00	1.00	1.00	1.00	1.00	1.00	1.00	1.00	1.00	1.00	
AdjDel/Veh:	7.8	7.8	7.8	7.9	7.9	0.0	0.0	7.1	7.1	10.3	10.3	10.3	
LOS by Move:	A	A	A	A	A	*	*	A	A	B	B	B	
ApproachDel:		7.8			7.9			7.1			10.3		
Delay Adj:		1.00			1.00			1.00			1.00		
ApprAdjDel:		7.8			7.9			7.1			10.3		
LOS by Appr:		A			A			A			B		
AllWayAvgQ:	0.2	0.2	0.2	0.0	0.0	0.0	0.0	0.0	0.0	0.7	0.7	0.7	

Overlook Parkway Extension
Future Alt 1 (Gates Closed - No Overlook)
PM Peak Hour

Note: Queue reported is the number of cars per lane.

Overlook Parkway Extension
Future Alt 1 (Gates Closed - No Overlook)
PM Peak Hour

Level Of Service Computation Report
2000 HCM 4-Way Stop Method (Future Volume Alternative)

Intersection #26 Corinthian Wy/Berry Rd

Cycle (sec):	100	Critical Vol./Cap.(X):	0.386
Loss Time (sec):	0 (Y+R=4.0 sec)	Average Delay (sec/veh):	8.9
Optimal Cycle:	0	Level Of Service:	A

Street Name:	Corinthian Wy						Berry Rd					
Approach:	North Bound			South Bound			East Bound			West Bound		
Movement:	L	T	R	L	T	R	L	T	R	L	T	R
Control:	Stop Sign			Stop Sign			Stop Sign			Stop Sign		
Rights:	Include			Include			Include			Include		
Min. Green:	7	7	7	7	7	7	7	7	7	7	7	7
Lanes:	0 0	0 0	0	0 0	1! 0	0	0 1	0 0	0	0 0	0 1	0
Volume Module:												
Base Vol:	0	0	0	42	0	321	104	22	0	0	13	12
Growth Adj:	1.00	1.00	1.00	1.00	1.00	1.00	1.00	1.00	1.00	1.00	1.00	1.00
Initial Bse:	0	0	0	42	0	321	104	22	0	0	13	12
Added Vol:	0	0	0	0	0	0	0	0	0	0	0	0
PasserByVol:	0	0	0	0	0	0	0	0	0	0	0	0
Initial Fut:	0	0	0	42	0	321	104	22	0	0	13	12
User Adj:	1.00	1.00	1.00	1.00	1.00	1.00	1.00	1.00	1.00	1.00	1.00	1.00
PHF Adj:	1.00	1.00	1.00	1.00	1.00	1.00	1.00	1.00	1.00	1.00	1.00	1.00
PHF Volume:	0	0	0	42	0	321	104	22	0	0	13	12
Reduct Vol:	0	0	0	0	0	0	0	0	0	0	0	0
Reduced Vol:	0	0	0	42	0	321	104	22	0	0	13	12
PCE Adj:	1.00	1.00	1.00	1.00	1.00	1.00	1.00	1.00	1.00	1.00	1.00	1.00
MLF Adj:	1.00	1.00	1.00	1.00	1.00	1.00	1.00	1.00	1.00	1.00	1.00	1.00
FinalVolume:	0	0	0	42	0	321	104	22	0	0	13	12
Saturation Flow Module:												
Adjustment:	1.00	1.00	1.00	1.00	1.00	1.00	1.00	1.00	1.00	1.00	1.00	1.00
Lanes:	0.00	0.00	0.00	0.12	0.00	0.88	0.83	0.17	0.00	0.00	0.52	0.48
Final Sat.:	0	0	0	109	0	831	585	124	0	0	388	358
Capacity Analysis Module:												
Vol/Sat:	xxxx	xxxx	xxxx	0.39	xxxx	0.39	0.18	0.18	xxxx	xxxx	0.03	0.03
Crit Moves:				****			****					****
Delay/Veh:	0.0	0.0	0.0	9.0	0.0	9.0	8.8	8.8	0.0	0.0	7.6	7.6
Delay Adj:	1.00	1.00	1.00	1.00	1.00	1.00	1.00	1.00	1.00	1.00	1.00	1.00
AdjDel/Veh:	0.0	0.0	0.0	9.0	0.0	9.0	8.8	8.8	0.0	0.0	7.6	7.6
LOS by Move:	*	*	*	A	*	A	A	A	*	*	A	A
ApproachDel:	xxxxxx			9.0			8.8			7.6		
Delay Adj:	xxxxx			1.00			1.00			1.00		
ApprAdjDel:	xxxxxx			9.0			8.8			7.6		
LOS by Appr:	*			A			A			A		
AllWayAvgQ:	0.0	0.0	0.0	0.6	0.6	0.6	0.2	0.2	0.2	0.0	0.0	0.0

Overlook Parkway Extension
Future Alt 1 (Gates Closed - No Overlook)
PM Peak Hour

Note: Queue reported is the number of cars per lane.

Overlook Parkway Extension
Future Alt 1 (Gates Closed - No Overlook)
PM Peak Hour

Level Of Service Computation Report
2000 HCM Unsignalized Method (Future Volume Alternative)

Intersection #28 Orozco Dr/Overlook Pkwy

Average Delay (sec/veh): 3.1 Worst Case Level Of Service: B[10.1]

Street Name:	Orozco Dr						Overlook Pkwy					
Approach:	North Bound			South Bound			East Bound			West Bound		
Movement:	L -	T -	R	L -	T -	R	L -	T -	R	L -	T -	R
Control:	Stop Sign			Stop Sign			Uncontrolled			Uncontrolled		
Rights:	Include			Include			Include			Include		
Lanes:	0 0	1! 0	0	0 0	1! 0	0	1 0	1 1	0	1 0	1 1	0
Volume Module:												
Base Vol:	9	3	1	72	6	5	5	100	4	1	87	33
Growth Adj:	1.00 1.00	1.00	1.00 1.00	1.00	1.00	1.00 1.00	1.00	1.00	1.00 1.00	1.00	1.00
Initial Bse:	9	3	1	72	6	5	5	100	4	1	87	33
Added Vol:	0	0	0	0	0	0	0	0	0	0	0	0
PasserByVol:	0	0	0	0	0	0	0	0	0	0	0	0
Initial Fut:	9	3	1	72	6	5	5	100	4	1	87	33
User Adj:	1.00 1.00	1.00	1.00 1.00	1.00	1.00	1.00 1.00	1.00	1.00	1.00 1.00	1.00	1.00
PHF Adj:	1.00 1.00	1.00	1.00 1.00	1.00	1.00	1.00 1.00	1.00	1.00	1.00 1.00	1.00	1.00
PHF Volume:	9	3	1	72	6	5	5	100	4	1	87	33
Reduct Vol:	0	0	0	0	0	0	0	0	0	0	0	0
FinalVolume:	9	3	1	72	6	5	5	100	4	1	87	33
Critical Gap Module:												
Critical Gp:	7.5	6.5	6.9	7.5	6.5	6.9	4.1	xxxx	xxxxx	4.1	xxxx	xxxxx
FollowUpTim:	3.5	4.0	3.3	3.5	4.0	3.3	2.2	xxxx	xxxxx	2.2	xxxx	xxxxx
Capacity Module:												
Cnflict Vol:	161	234	52	167	220	60	120	xxxx	xxxxx	104	xxxx	xxxxx
Potent Cap.:	795	670	1011	787	682	999	1480	xxxx	xxxxx	1500	xxxx	xxxxx
Move Cap.:	783	667	1011	781	680	999	1480	xxxx	xxxxx	1500	xxxx	xxxxx
Volume/Cap:	0.01 0.00	0.00	0.09 0.01	0.01	0.00	xxxx	xxxx	0.00	xxxx	xxxx
Level Of Service Module:												
2Way95thQ:	xxxx xxxx	xxxxx	xxxx xxxx	xxxxx	0.0	xxxx	xxxxx	0.0	xxxx	xxxxx
Control Del:	xxxxx xxxx	xxxxx	xxxxx xxxx	xxxxx	7.4	xxxx	xxxxx	7.4	xxxx	xxxxx
LOS by Move:	* *	*	* *	*	A	*	*	A	*	*
Movement:	LT - LTR - RT		LT - LTR - RT		LT - LTR - RT			LT - LTR - RT		
Shared Cap.:	xxxx 766	xxxxx	xxxx 783	xxxxx	xxxx	xxxx	xxxxx	xxxx	xxxx	xxxxx
SharedQueue:	xxxxx 0.1	xxxxx	xxxxx 0.4	xxxxx	xxxxx	xxxx	xxxxx	xxxxx	xxxx	xxxxx
Shrd ConDel:	xxxxx 9.8	xxxxx	xxxxx 10.1	xxxxx	xxxxx	xxxx	xxxxx	xxxxx	xxxx	xxxxx
Shared LOS:	* A	*	* B	*	*	*	*	*	*	*
ApproachDel:	9.8		10.1		xxxxxx			xxxxxx		
ApproachLOS:	A		B		*			*		

Note: Queue reported is the number of cars per lane.

Overlook Parkway Extension
Future Alt 1 (Gates Closed - No Overlook)
PM Peak Hour

Level Of Service Computation Report
2000 HCM 4-Way Stop Method (Future Volume Alternative)

Intersection #51 Madison St/Victoria Ave (North)

Cycle (sec): 100 | Critical Vol./Cap.(X): 1.210
Loss Time (sec): 0 (Y+R=4.0 sec) | Average Delay (sec/veh): 77.2
Optimal Cycle: 0 | Level Of Service: F

Street Name:	Madison St							Victoria Ave (North)					
Approach:	North Bound			South Bound			East Bound			West Bound			
Movement:	L	T	R	L	T	R	L	T	R	L	T	R	
Control:	Stop Sign			Stop Sign			Stop Sign			Stop Sign			
Rights:	Include			Include			Include			Include			
Min. Green:	7	7	7	7	7	7	7	7	7	7	7	7	
Lanes:	0 1	0 0	0	0 0	1 0	1	0 0	0 0	0	0 1	0 0	1	
Volume Module:													
Base Vol:	9	134	0	0	740	36	0	0	0	18	172	221	
Growth Adj:	1.00	1.00	1.00	1.00	1.00	1.00	1.00	1.00	1.00	1.00	1.00	1.00	
Initial Bse:	9	134	0	0	740	36	0	0	0	18	172	221	
Added Vol:	0	0	0	0	0	0	0	0	0	0	0	0	
PasserByVol:	0	0	0	0	0	0	0	0	0	0	0	0	
Initial Fut:	9	134	0	0	740	36	0	0	0	18	172	221	
User Adj:	1.00	1.00	1.00	1.00	1.00	1.00	1.00	1.00	1.00	1.00	1.00	1.00	
PHF Adj:	1.00	1.00	1.00	1.00	1.00	1.00	1.00	1.00	1.00	1.00	1.00	1.00	
PHF Volume:	9	134	0	0	740	36	0	0	0	18	172	221	
Reduct Vol:	0	0	0	0	0	0	0	0	0	0	0	0	
Reduced Vol:	9	134	0	0	740	36	0	0	0	18	172	221	
PCE Adj:	1.00	1.00	1.00	1.00	1.00	1.00	1.00	1.00	1.00	1.00	1.00	1.00	
MLF Adj:	1.00	1.00	1.00	1.00	1.00	1.00	1.00	1.00	1.00	1.00	1.00	1.00	
FinalVolume:	9	134	0	0	740	36	0	0	0	18	172	221	
Saturation Flow Module:													
Adjustment:	1.00	1.00	1.00	1.00	1.00	1.00	1.00	1.00	1.00	1.00	1.00	1.00	
Lanes:	0.06	0.94	0.00	0.00	1.00	1.00	0.00	0.00	0.00	0.09	0.91	1.00	
Final Sat.:	34	505	0	0	612	681	0	0	0	51	487	605	
Capacity Analysis Module:													
Vol/Sat:	0.27	0.27	xxxx	xxxx	1.21	0.05	xxxx	xxxx	xxxx	0.35	0.35	0.37	
Crit Moves:		****			****							****	
Delay/Veh:	11.9	11.9	0.0	0.0	129	8.2	0.0	0.0	0.0	12.9	12.9	11.9	
Delay Adj:	1.00	1.00	1.00	1.00	1.00	1.00	1.00	1.00	1.00	1.00	1.00	1.00	
AdjDel/Veh:	11.9	11.9	0.0	0.0	129	8.2	0.0	0.0	0.0	12.9	12.9	11.9	
LOS by Move:	B	B	*	*	F	A	*	*	*	B	B	B	
ApproachDel:	11.9			123.5			xxxxxx			12.4			
Delay Adj:	1.00			1.00			xxxxx			1.00			
ApprAdjDel:	11.9			123.5			xxxxxx			12.4			
LOS by Appr:	B			F			*			B			
AllWayAvgQ:	0.3	0.3	0.3	0.0	20.5	0.1	0.0	0.0	0.0	0.5	0.5	0.6	

Overlook Parkway Extension
Future Alt 1 (Gates Closed - No Overlook)
PM Peak Hour

Note: Queue reported is the number of cars per lane.

Overlook Parkway Extension
Future Alt 1 (Gates Closed - No Overlook)
PM Peak Hour

Level Of Service Computation Report
2000 HCM 4-Way Stop Method (Future Volume Alternative)

Intersection #52 Madison St/Victoria Ave (South)

Cycle (sec): 100 | Critical Vol./Cap.(X): 1.036
Loss Time (sec): 0 (Y+R=4.0 sec) | Average Delay (sec/veh): 47.4
Optimal Cycle: 0 | Level Of Service: E

Street Name:	Madison St							Victoria Ave (South)					
Approach:	North Bound			South Bound			East Bound			West Bound			
Movement:	L	T	R	L	T	R	L	T	R	L	T	R	
Control:	Stop Sign			Stop Sign			Stop Sign			Stop Sign			
Rights:	Include			Include			Include			Include			
Min. Green:	7	7	7	7	7	7	7	7	7	7	7	7	
Lanes:	0 0	0 1	0	0 1	0 0	0	0 0	1! 0	0	0 0	0 0	0	
Volume Module:													
Base Vol:	0	113	12	487	271	0	30	197	9	0	0	0	
Growth Adj:	1.00	1.00	1.00	1.00	1.00	1.00	1.00	1.00	1.00	1.00	1.00	1.00	
Initial Bse:	0	113	12	487	271	0	30	197	9	0	0	0	
Added Vol:	0	0	0	0	0	0	0	0	0	0	0	0	
PasserByVol:	0	0	0	0	0	0	0	0	0	0	0	0	
Initial Fut:	0	113	12	487	271	0	30	197	9	0	0	0	
User Adj:	1.00	1.00	1.00	1.00	1.00	1.00	1.00	1.00	1.00	1.00	1.00	1.00	
PHF Adj:	1.00	1.00	1.00	1.00	1.00	1.00	1.00	1.00	1.00	1.00	1.00	1.00	
PHF Volume:	0	113	12	487	271	0	30	197	9	0	0	0	
Reduct Vol:	0	0	0	0	0	0	0	0	0	0	0	0	
Reduced Vol:	0	113	12	487	271	0	30	197	9	0	0	0	
PCE Adj:	1.00	1.00	1.00	1.00	1.00	1.00	1.00	1.00	1.00	1.00	1.00	1.00	
MLF Adj:	1.00	1.00	1.00	1.00	1.00	1.00	1.00	1.00	1.00	1.00	1.00	1.00	
FinalVolume:	0	113	12	487	271	0	30	197	9	0	0	0	
Saturation Flow Module:													
Adjustment:	1.00	1.00	1.00	1.00	1.00	1.00	1.00	1.00	1.00	1.00	1.00	1.00	
Lanes:	0.00	0.90	0.10	0.64	0.36	0.00	0.13	0.83	0.04	0.00	0.00	0.00	
Final Sat.:	0	582	62	470	262	0	77	505	23	0	0	0	
Capacity Analysis Module:													
Vol/Sat:	xxxx	0.19	0.19	1.04	1.04	xxxx	0.39	0.39	0.39	xxxx	xxxx	xxxx	
Crit Moves:		****			****		****						
Delay/Veh:	0.0	9.7	9.7	64.4	64.4	0.0	12.6	12.6	12.6	0.0	0.0	0.0	
Delay Adj:	1.00	1.00	1.00	1.00	1.00	1.00	1.00	1.00	1.00	1.00	1.00	1.00	
AdjDel/Veh:	0.0	9.7	9.7	64.4	64.4	0.0	12.6	12.6	12.6	0.0	0.0	0.0	
LOS by Move:	*	A	A	F	F	*	B	B	B	*	*	*	
ApproachDel:		9.7			64.4			12.6			xxxxxx		
Delay Adj:		1.00			1.00			1.00			xxxxx		
ApprAdjDel:		9.7			64.4			12.6			xxxxxx		
LOS by Appr:		A			F			B			*		
AllWayAvgQ:	0.2	0.2	0.2	11.5	11.5	11.5	0.6	0.6	0.6	0.0	0.0	0.0	

Overlook Parkway Extension
Future Alt 1 (Gates Closed - No Overlook)
PM Peak Hour

Note: Queue reported is the number of cars per lane.

Overlook Parkway Extension
Future Alt 1 (Gates Closed - No Overlook)
PM Peak Hour

Level Of Service Computation Report
2000 HCM 4-Way Stop Method (Future Volume Alternative)

Intersection #81 Washington St/Victoria Ave (North)

Cycle (sec): 100 | Critical Vol./Cap.(X): 1.081
Loss Time (sec): 0 (Y+R=4.0 sec) | Average Delay (sec/veh): 45.8
Optimal Cycle: 0 | Level Of Service: E

Street Name:	Washington St							Victoria Ave (North)					
Approach:	North Bound			South Bound			East Bound			West Bound			
Movement:	L	T	R	L	T	R	L	T	R	L	T	R	
Control:	Stop Sign			Stop Sign			Stop Sign			Stop Sign			
Rights:	Include			Include			Include			Include			
Min. Green:	7	7	7	7	7	7	7	7	7	7	7	7	
Lanes:	0 1	1 0	0	0 0	0 1	0	0 0	0 0	0	1 0	0 1	0	
Volume Module:													
Base Vol:	276	529	0	0	561	3	0	0	0	269	195	11	
Growth Adj:	1.00	1.00	1.00	1.00	1.00	1.00	1.00	1.00	1.00	1.00	1.00	1.00	
Initial Bse:	276	529	0	0	561	3	0	0	0	269	195	11	
Added Vol:	0	0	0	0	0	0	0	0	0	0	0	0	
PasserByVol:	0	0	0	0	0	0	0	0	0	0	0	0	
Initial Fut:	276	529	0	0	561	3	0	0	0	269	195	11	
User Adj:	1.00	1.00	1.00	1.00	1.00	1.00	1.00	1.00	1.00	1.00	1.00	1.00	
PHF Adj:	1.00	1.00	1.00	1.00	1.00	1.00	1.00	1.00	1.00	1.00	1.00	1.00	
PHF Volume:	276	529	0	0	561	3	0	0	0	269	195	11	
Reduct Vol:	0	0	0	0	0	0	0	0	0	0	0	0	
Reduced Vol:	276	529	0	0	561	3	0	0	0	269	195	11	
PCE Adj:	1.00	1.00	1.00	1.00	1.00	1.00	1.00	1.00	1.00	1.00	1.00	1.00	
MLF Adj:	1.00	1.00	1.00	1.00	1.00	1.00	1.00	1.00	1.00	1.00	1.00	1.00	
FinalVolume:	276	529	0	0	561	3	0	0	0	269	195	11	
Saturation Flow Module:													
Adjustment:	1.00	1.00	1.00	1.00	1.00	1.00	1.00	1.00	1.00	1.00	1.00	1.00	
Lanes:	0.69	1.31	0.00	0.00	0.99	0.01	0.00	0.00	0.00	1.00	0.95	0.05	
Final Sat.:	340	675	0	0	519	3	0	0	0	452	458	26	
Capacity Analysis Module:													
Vol/Sat:	0.81	0.78	xxxx	xxxx	1.08	1.08	xxxx	xxxx	xxxx	0.59	0.43	0.43	
Crit Moves:	****				****					****			
Delay/Veh:	34.2	30.5	0.0	0.0	88.4	88.4	0.0	0.0	0.0	21.4	15.4	15.4	
Delay Adj:	1.00	1.00	1.00	1.00	1.00	1.00	1.00	1.00	1.00	1.00	1.00	1.00	
AdjDel/Veh:	34.2	30.5	0.0	0.0	88.4	88.4	0.0	0.0	0.0	21.4	15.4	15.4	
LOS by Move:	D	D	*	*	F	F	*	*	*	C	C	C	
ApproachDel:	31.8			88.4			xxxxxx			18.8			
Delay Adj:	1.00			1.00			xxxxx			1.00			
ApprAdjDel:	31.8			88.4			xxxxxx			18.8			
LOS by Appr:	D			F			*			C			
AllWayAvgQ:	3.3	2.8	0.0	11.4	11.4	11.4	0.0	0.0	0.0	1.4	0.7	0.7	

Overlook Parkway Extension
Future Alt 1 (Gates Closed - No Overlook)
PM Peak Hour

Note: Queue reported is the number of cars per lane.

Overlook Parkway Extension
Future Alt 1 (Gates Closed - No Overlook)
PM Peak Hour

Level Of Service Computation Report
2000 HCM 4-Way Stop Method (Future Volume Alternative)

Intersection #82 Washington St/Victoria Ave (South)

Cycle (sec): 100 Critical Vol./Cap.(X): 2.415
Loss Time (sec): 0 (Y+R=4.0 sec) Average Delay (sec/veh): 285.3
Optimal Cycle: 0 Level Of Service: F

Street Name:	Washington St							Victoria Ave (South)					
Approach:	North Bound			South Bound				East Bound			West Bound		
Movement:	L -	T -	R	L -	T -	R	L -	T -	R	L -	T -	R
Control:	Stop Sign			Stop Sign			Stop Sign			Stop Sign		
Rights:	Include			Include			Include			Include		
Min. Green:	7	7	7	7	7	7	7	7	7	7	7	7
Lanes:	0 0	2 0	1	0 1	0 0	0	0 1	0 0	1	0 0	0 0	0
Volume Module:												
Base Vol:	0	801	409	2	1165	0	4	135	553	0	0	0
Growth Adj:	1.00	1.00	1.00	1.00	1.00	1.00	1.00	1.00	1.00	1.00	1.00	1.00
Initial Bse:	0	801	409	2	1165	0	4	135	553	0	0	0
Added Vol:	0	0	0	0	0	0	0	0	0	0	0	0
PasserByVol:	0	0	0	0	0	0	0	0	0	0	0	0
Initial Fut:	0	801	409	2	1165	0	4	135	553	0	0	0
User Adj:	1.00	1.00	1.00	1.00	1.00	1.00	1.00	1.00	1.00	1.00	1.00	1.00
PHF Adj:	1.00	1.00	1.00	1.00	1.00	1.00	1.00	1.00	1.00	1.00	1.00	1.00
PHF Volume:	0	801	409	2	1165	0	4	135	553	0	0	0
Reduct Vol:	0	0	0	0	0	0	0	0	0	0	0	0
Reduced Vol:	0	801	409	2	1165	0	4	135	553	0	0	0
PCE Adj:	1.00	1.00	1.00	1.00	1.00	1.00	1.00	1.00	1.00	1.00	1.00	1.00
MLF Adj:	1.00	1.00	1.00	1.00	1.00	1.00	1.00	1.00	1.00	1.00	1.00	1.00
FinalVolume:	0	801	409	2	1165	0	4	135	553	0	0	0
Saturation Flow Module:												
Adjustment:	1.00	1.00	1.00	1.00	1.00	1.00	1.00	1.00	1.00	1.00	1.00	1.00
Lanes:	0.00	2.00	1.00	0.01	0.99	0.00	0.03	0.97	1.00	0.00	0.00	0.00
Final Sat.:	0	959	529	1	482	0	13	426	482	0	0	0
Capacity Analysis Module:												
Vol/Sat:	xxxx	0.83	0.77	2.41	2.41	xxxx	0.32	0.32	1.15	xxxx	xxxx	xxxx
Crit Moves:		****			****				****			
Delay/Veh:	0.0	37.9	29.0	658.6	659	0.0	14.6	14.6	113.5	0.0	0.0	0.0
Delay Adj:	1.00	1.00	1.00	1.00	1.00	1.00	1.00	1.00	1.00	1.00	1.00	1.00
AdjDel/Veh:	0.0	37.9	29.0	658.6	659	0.0	14.6	14.6	113.5	0.0	0.0	0.0
LOS by Move:	*	E	D	F	F	*	B	B	F	*	*	*
ApproachDel:	34.9			658.6			93.6			xxxxxx		
Delay Adj:	1.00			1.00			1.00			xxxxx		
ApprAdjDel:	34.9			658.6			93.6			xxxxxx		
LOS by Appr:	D			F			F			*		
AllWayAvgQ:	0.0	3.7	2.9	87.0	87.0	87.0	0.5	0.5	13.8	0.0	0.0	0.0

Overlook Parkway Extension
Future Alt 1 (Gates Closed - No Overlook)
PM Peak Hour

Note: Queue reported is the number of cars per lane.

Overlook Parkway Extension
Future Alt 1 (Gates Closed - No Overlook)
PM Peak Hour

Level Of Service Computation Report
2000 HCM 4-Way Stop Method (Future Volume Alternative)

Intersection #221 Mary St/Victoria Ave (North)

Cycle (sec):	100	Critical Vol./Cap.(X):	1.241
Loss Time (sec):	0 (Y+R=4.0 sec)	Average Delay (sec/veh):	91.5
Optimal Cycle:	0	Level Of Service:	F

Street Name:	Mary St							Victoria Ave (North)					
Approach:	North Bound			South Bound			East Bound			West Bound			
Movement:	L	- T	- R	L	- T	- R	L	- T	- R	L	- T	- R	
Control:	Stop Sign			Stop Sign			Stop Sign			Stop Sign			
Rights:	Include			Include			Include			Include			
Min. Green:	7	7	7	7	7	7	7	7	7	7	7	7	
Lanes:	0 1	0 0	0	0 0	1 0	1	0 0	0 0	0	0 0	1! 0	0	
Volume Module:													
Base Vol:	12	462	0	0	608	432	0	0	0	177	311	141	
Growth Adj:	1.00	1.00	1.00	1.00	1.00	1.00	1.00	1.00	1.00	1.00	1.00	1.00	
Initial Bse:	12	462	0	0	608	432	0	0	0	177	311	141	
Added Vol:	0	0	0	0	0	0	0	0	0	0	0	0	
PasserByVol:	0	0	0	0	0	0	0	0	0	0	0	0	
Initial Fut:	12	462	0	0	608	432	0	0	0	177	311	141	
User Adj:	1.00	1.00	1.00	1.00	1.00	1.00	1.00	1.00	1.00	1.00	1.00	1.00	
PHF Adj:	1.00	1.00	1.00	1.00	1.00	1.00	1.00	1.00	1.00	1.00	1.00	1.00	
PHF Volume:	12	462	0	0	608	432	0	0	0	177	311	141	
Reduct Vol:	0	0	0	0	0	0	0	0	0	0	0	0	
Reduced Vol:	12	462	0	0	608	432	0	0	0	177	311	141	
PCE Adj:	1.00	1.00	1.00	1.00	1.00	1.00	1.00	1.00	1.00	1.00	1.00	1.00	
MLF Adj:	1.00	1.00	1.00	1.00	1.00	1.00	1.00	1.00	1.00	1.00	1.00	1.00	
FinalVolume:	12	462	0	0	608	432	0	0	0	177	311	141	
Saturation Flow Module:													
Adjustment:	1.00	1.00	1.00	1.00	1.00	1.00	1.00	1.00	1.00	1.00	1.00	1.00	
Lanes:	0.03	0.97	0.00	0.00	1.00	1.00	0.00	0.00	0.00	0.28	0.50	0.22	
Final Sat.:	13	505	0	0	490	541	0	0	0	154	270	122	
Capacity Analysis Module:													
Vol/Sat:	0.92	0.92	xxxx	xxxx	1.24	0.80	xxxx	xxxx	xxxx	1.15	1.15	1.15	
Crit Moves:		****			****					****			
Delay/Veh:	47.8	47.8	0.0	0.0	148	30.6	0.0	0.0	0.0	111.3	111	111.3	
Delay Adj:	1.00	1.00	1.00	1.00	1.00	1.00	1.00	1.00	1.00	1.00	1.00	1.00	
AdjDel/Veh:	47.8	47.8	0.0	0.0	148	30.6	0.0	0.0	0.0	111.3	111	111.3	
LOS by Move:	E	E	*	*	F	D	*	*	*	F	F	F	
ApproachDel:		47.8			99.5			xxxxxx			111.3		
Delay Adj:		1.00			1.00			xxxxx			1.00		
ApprAdjDel:		47.8			99.5			xxxxxx			111.3		
LOS by Appr:		E			F			*			F		
AllWayAvgQ:	5.4	5.4	5.4	0.0	18.8	3.2	0.0	0.0	0.0	15.4	15.4	15.4	

Overlook Parkway Extension
Future Alt 1 (Gates Closed - No Overlook)
PM Peak Hour

Note: Queue reported is the number of cars per lane.

Overlook Parkway Extension
Future Alt 1 (Gates Closed - No Overlook)
PM Peak Hour

Level Of Service Computation Report
2000 HCM 4-Way Stop Method (Future Volume Alternative)

Intersection #222 Mary St/Victoria Ave (South)

Cycle (sec):	100	Critical Vol./Cap.(X):	1.287
Loss Time (sec):	0 (Y+R=4.0 sec)	Average Delay (sec/veh):	86.2
Optimal Cycle:	0	Level Of Service:	F

Street Name:	Mary St							Victoria Ave (South)					
Approach:	North Bound			South Bound			East Bound			West Bound			
Movement:	L	T	R	L	T	R	L	T	R	L	T	R	
Control:	Stop Sign			Stop Sign			Stop Sign			Stop Sign			
Rights:	Include			Include			Include			Include			
Min. Green:	7	7	7	7	7	7	7	7	7	7	7	7	
Lanes:	0 0	0 1	0	0 1	0 0	0	1 0	0 1	0	0 0	0 0	0	
Volume Module:													
Base Vol:	0	241	91	102	683	0	233	262	17	0	0	0	
Growth Adj:	1.00	1.00	1.00	1.00	1.00	1.00	1.00	1.00	1.00	1.00	1.00	1.00	
Initial Bse:	0	241	91	102	683	0	233	262	17	0	0	0	
Added Vol:	0	0	0	0	0	0	0	0	0	0	0	0	
PasserByVol:	0	0	0	0	0	0	0	0	0	0	0	0	
Initial Fut:	0	241	91	102	683	0	233	262	17	0	0	0	
User Adj:	1.00	1.00	1.00	1.00	1.00	1.00	1.00	1.00	1.00	1.00	1.00	1.00	
PHF Adj:	1.00	1.00	1.00	1.00	1.00	1.00	1.00	1.00	1.00	1.00	1.00	1.00	
PHF Volume:	0	241	91	102	683	0	233	262	17	0	0	0	
Reduct Vol:	0	0	0	0	0	0	0	0	0	0	0	0	
Reduced Vol:	0	241	91	102	683	0	233	262	17	0	0	0	
PCE Adj:	1.00	1.00	1.00	1.00	1.00	1.00	1.00	1.00	1.00	1.00	1.00	1.00	
MLF Adj:	1.00	1.00	1.00	1.00	1.00	1.00	1.00	1.00	1.00	1.00	1.00	1.00	
FinalVolume:	0	241	91	102	683	0	233	262	17	0	0	0	
Saturation Flow Module:													
Adjustment:	1.00	1.00	1.00	1.00	1.00	1.00	1.00	1.00	1.00	1.00	1.00	1.00	
Lanes:	0.00	0.73	0.27	0.13	0.87	0.00	1.00	0.94	0.06	0.00	0.00	0.00	
Final Sat.:	0	420	159	79	531	0	485	490	32	0	0	0	
Capacity Analysis Module:													
Vol/Sat:	xxxx	0.57	0.57	1.29	1.29	xxxx	0.48	0.53	0.53	xxxx	xxxx	xxxx	
Crit Moves:		****			****			****					
Delay/Veh:	0.0	16.9	16.9	160.8	161	0.0	16.7	17.0	17.0	0.0	0.0	0.0	
Delay Adj:	1.00	1.00	1.00	1.00	1.00	1.00	1.00	1.00	1.00	1.00	1.00	1.00	
AdjDel/Veh:	0.0	16.9	16.9	160.8	161	0.0	16.7	17.0	17.0	0.0	0.0	0.0	
LOS by Move:	*	C	C	F	F	*	C	C	C	*	*	*	
ApproachDel:		16.9			160.8			16.9			xxxxxx		
Delay Adj:		1.00			1.00			1.00			xxxxx		
ApprAdjDel:		16.9			160.8			16.9			xxxxxx		
LOS by Appr:		C			F			C			*		
AllWayAvgQ:	1.3	1.3	1.3	25.7	25.7	25.7	0.9	1.1	1.1	0.0	0.0	0.0	

Overlook Parkway Extension
Future Alt 1 (Gates Closed - No Overlook)
PM Peak Hour

Note: Queue reported is the number of cars per lane.

APPENDIX C:
TRAFFIX WORKSHEETS
2035 CONDITIONS – GATES OPEN


```
Future Alt 2 AM            Tue Apr 24, 2012 17:01:53                 Page 1-1
-------------------------------------------------------------------------------
                          Overlook Parkway Extension
                    Future Alt 2 (Gates Opened - No Overlook)
                                  AM Peak Hour
-------------------------------------------------------------------------------
                                 Scenario Report
Scenario:             Future Alt 2 AM

Command:              Future Alt 2 AM
Volume:               Future Alt 2 AM
Geometry:             Future
Impact Fee:           Default Impact Fee
Trip Generation:      none
Trip Distribution:    none
Paths:                Default Path
Routes:               Default Route
Configuration:        Future Alt 2 AM

Traffix 7.9.0415 (c) 2007 Dowling Assoc. Licensed to MMA, LONG BEACH, CA
```

Overlook Parkway Extension
Future Alt 2 (Gates Opened - No Overlook)
AM Peak Hour

Impact Analysis Report
Level Of Service

Intersection	Base LOS	Base Del/Veh	Base V/C	Future LOS	Future Del/Veh	Future V/C	Change in
# 1 Madison St/SR-91 WB Ramps	C	31.2	0.646	C	31.2	0.646	+ 0.000 D/V
# 2 Madison St/SR-91 EB Ramps	D	38.1	0.803	D	38.1	0.803	+ 0.000 D/V
# 3 Madison St/Indiana Ave	F	113.4	1.284	F	113.4	1.284	+ 0.000 D/V
# 4 Madison St/Lincoln Ave	C	30.5	0.440	C	30.5	0.440	+ 0.000 D/V
# 6 Washington St/Indiana Ave	D	40.7	0.978	D	40.7	0.978	+ 0.000 D/V
# 7 Washington St/Lincoln Ave	F	222.7	1.952	F	222.7	1.952	+ 0.000 V/C
# 9 Washington St/Overlook Pkwy	C	22.5	0.861	C	22.5	0.861	+ 0.000 D/V
# 10 Riverside Ave-SR-91 WB/Arlingt	D	39.2	0.990	D	39.2	0.990	+ 0.000 D/V
# 11 Indiana Ave-SR-91 EB/Arlington	D	35.3	0.924	D	35.3	0.924	+ 0.000 D/V
# 12 Victoria Ave/Arlington Ave	F	94.0	1.185	F	94.0	1.185	+ 0.000 D/V
# 13 Alessandro Blvd/Arlington Ave	E	68.6	1.082	E	68.6	1.082	+ 0.000 D/V
# 14 Alessandro Blvd/Overlook Pkwy	F	83.5	1.221	F	83.5	1.221	+ 0.000 D/V
# 15 Alessandro Blvd/Trautwein Rd	E	57.9	0.973	E	57.9	0.973	+ 0.000 D/V
# 16 Crystal View Ter/Overlook Pkwy	A	8.9	0.316	A	8.9	0.316	+ 0.000 V/C
# 17 Kingdom Dr/Overlook Pkwy	B	11.2	0.000	B	11.2	0.000	+ 0.000 D/V
# 18 Kingdom Dr/Green Orchard Pl	A	8.9	0.000	A	8.9	0.000	+ 0.000 D/V
# 19 Trautwein Rd/John F. Kennedy D	F	94.8	1.126	F	94.8	1.126	+ 0.000 D/V
# 20 Washington St/Bradley St	C	27.6	0.831	C	27.6	0.831	+ 0.000 D/V
# 21 Alessandro Blvd/Via Vista Dr	C	29.7	0.909	C	29.7	0.909	+ 0.000 D/V
# 23 Mary St/Hawarden Dr	A	8.8	0.299	A	8.8	0.299	+ 0.000 V/C
# 24 Hawarden Dr/Overlook Pkwy	A	8.8	0.210	A	8.8	0.210	+ 0.000 V/C
# 25 Crystal View Ter/Berry Rd	A	9.0	0.381	A	9.0	0.381	+ 0.000 V/C
# 26 Corinthian Wy/Berry Rd	A	8.6	0.313	A	8.6	0.313	+ 0.000 V/C

Traffix 7.9.0415 (c) 2007 Dowling Assoc. Licensed to MMA, LONG BEACH, CA

Overlook Parkway Extension
Future Alt 2 (Gates Opened - No Overlook)
AM Peak Hour

Intersection	Base LOS	Base Del/Veh	Base V/C	Future LOS	Future Del/Veh	Future V/C	Change in
# 28 Orozco Dr/Overlook Pkwy	B	12.4	0.000	B	12.4	0.000	+ 0.000 D/V
# 51 Madison St/Victoria Ave (North	B	13.0	0.586	B	13.0	0.586	+ 0.000 V/C
# 52 Madison St/Victoria Ave (South	B	10.4	0.417	B	10.4	0.417	+ 0.000 V/C
# 81 Washington St/Victoria Ave (No	F	103.6	1.294	F	103.6	1.294	+ 0.000 V/C
# 82 Washington St/Victoria Ave (So	F	116.3	1.234	F	116.3	1.234	+ 0.000 V/C
#221 Mary St/Victoria Ave (North)	F	110.7	1.347	F	110.7	1.347	+ 0.000 V/C
#222 Mary St/Victoria Ave (South)	E	40.9	1.030	E	40.9	1.030	+ 0.000 V/C

Traffix 7.9.0415 (c) 2007 Dowling Assoc. Licensed to MMA, LONG BEACH, CA

Overlook Parkway Extension
Future Alt 2 (Gates Opened - No Overlook)
AM Peak Hour

Level Of Service Computation Report
2000 HCM Operations Method (Future Volume Alternative)

Intersection #1 Madison St/SR-91 WB Ramps

Cycle (sec):	100	Critical Vol./Cap.(X):	0.646
Loss Time (sec):	12 (Y+R=4.0 sec)	Average Delay (sec/veh):	31.2
Optimal Cycle:	53	Level Of Service:	C

Street Name:	Madison St								SR-91 WB Ramps			
Approach:	North Bound				South Bound				East Bound			
Movement:	L	T	R		L	T	R		L	T	R	
Control:	Protected				Protected				Split Phase			
Rights:	Include				Include				Include			
Min. Green:	7	7	7		7	7	7		7	7	7	
Lanes:	1 0	2 0	0		0 0	3 0	1		0 0	0 0	0	
Volume Module:												
Base Vol:	422	1115	0		0	728	179		0	0	0	
Growth Adj:	1.00	1.00	1.00		1.00	1.00	1.00		1.00	1.00	1.00	
Initial Bse:	422	1115	0		0	728	179		0	0	0	
Added Vol:	0	0	0		0	0	0		0	0	0	
PasserByVol:	0	0	0		0	0	0		0	0	0	
Initial Fut:	422	1115	0		0	728	179		0	0	0	
User Adj:	1.00	1.00	1.00		1.00	1.00	1.00		1.00	1.00	1.00	
PHF Adj:	1.00	1.00	1.00		1.00	1.00	1.00		1.00	1.00	1.00	
PHF Volume:	422	1115	0		0	728	179		0	0	0	
Reduct Vol:	0	0	0		0	0	0		0	0	0	
Reduced Vol:	422	1115	0		0	728	179		0	0	0	
PCE Adj:	1.00	1.00	1.00		1.00	1.00	1.00		1.00	1.00	1.00	
MLF Adj:	1.00	1.00	1.00		1.00	1.00	1.00		1.00	1.00	1.00	
FinalVolume:	422	1115	0		0	728	179		0	0	0	
Saturation Flow Module:												
Sat/Lane:	1900	1900	1900		1900	1900	1900		1900	1900	1900	
Adjustment:	0.95	0.95	1.00		1.00	0.91	0.85		1.00	1.00	1.00	
Lanes:	1.00	2.00	0.00		0.00	3.00	1.00		0.00	0.00	0.00	
Final Sat.:	1805	3610	0		0	5187	1615		0	0	0	
Capacity Analysis Module:												
Vol/Sat:	0.23	0.31	0.00		0.00	0.14	0.11		0.00	0.00	0.00	
Crit Moves:		****			****							
Green/Cycle:	0.32	0.44	0.00		0.00	0.19	0.19		0.00	0.00	0.00	
Volume/Cap:	0.73	0.70	0.00		0.00	0.73	0.58		0.00	0.00	0.00	
Delay/Veh:	35.1	24.1	0.0		0.0	40.9	39.5		0.0	0.0	0.0	
User DelAdj:	1.00	1.00	1.00		1.00	1.00	1.00		1.00	1.00	1.00	
AdjDel/Veh:	35.1	24.1	0.0		0.0	40.9	39.5		0.0	0.0	0.0	
LOS by Move:	D	C	A		A	D	D		A	A	A	
HCM2kAvgQ:	13	15	0		0	9	6		0	0	0	

Street Name:												
Approach:	South Bound				East Bound				West Bound			
Movement:	L	T	R		L	T	R		L	T	R	
Control:	Protected				Protected				Split Phase			
Rights:	Include				Include				Include			
Min. Green:	7	7	7		7	7	7		7	7	7	
Lanes:	0 0	3 0	1		1 0	2 0	0		0 1	0 0	1	
Volume Module:												
Base Vol:	441	4	235		422	1115	0		0	728	179	
Growth Adj:	1.00	1.00	1.00		1.00	1.00	1.00		1.00	1.00	1.00	
Initial Bse:	441	4	235		422	1115	0		0	728	179	
Added Vol:	0	0	0		0	0	0		0	0	0	
PasserByVol:	0	0	0		0	0	0		0	0	0	
Initial Fut:	441	4	235		422	1115	0		0	728	179	
User Adj:	1.00	1.00	1.00		1.00	1.00	1.00		1.00	1.00	1.00	
PHF Adj:	1.00	1.00	1.00		1.00	1.00	1.00		1.00	1.00	1.00	
PHF Volume:	441	4	235		422	1115	0		0	728	179	
Reduct Vol:	0	0	0		0	0	0		0	0	0	
Reduced Vol:	441	4	235		422	1115	0		0	728	179	
PCE Adj:	1.00	1.00	1.00		1.00	1.00	1.00		1.00	1.00	1.00	
MLF Adj:	1.00	1.00	1.00		1.00	1.00	1.00		1.00	1.00	1.00	
FinalVolume:	441	4	235		422	1115	0		0	728	179	
Saturation Flow Module:												
Sat/Lane:	1900	1900	1900		1900	1900	1900		1900	1900	1900	
Adjustment:	0.90	0.90	0.85		0.95	0.91	0.85		1.00	1.00	1.00	
Lanes:	0.99	0.01	1.00		0.00	5187	1615		0	3610	0	
Final Sat.:	1700	15	1615									
Capacity Analysis Module:												
Vol/Sat:	0.26	0.26	0.15									
Crit Moves:		****										
Green/Cycle:	0.37	0.37	0.37									
Volume/Cap:	0.70	0.70	0.39									
Delay/Veh:	30.3	30.3	23.7									
User DelAdj:	1.00	1.00	1.00									
AdjDel/Veh:	30.3	30.3	23.7									
LOS by Move:	C	C	C									
HCM2kAvgQ:	13	13	5									

Note: Queue reported is the number of cars per lane.

Traffix 7.9.0415 (c) 2007 Dowling Assoc. Licensed to MMA, LONG BEACH, CA

Overlook Parkway Extension
Future Alt 2 (Gates Opened - No Overlook)
AM Peak Hour

Level Of Service Computation Report
2000 HCM Operations Method (Future Volume Alternative)

Intersection #2 Madison St/SR-91 EB Ramps

Cycle (sec):	100	Critical Vol./Cap.(X):	0.803
Loss Time (sec):	12 (Y+R=4.0 sec)	Average Delay (sec/veh):	38.1
Optimal Cycle:	78	Level Of Service:	D

Street Name:	Madison St								SR-91 EB Ramps			
Approach:	North Bound				South Bound				East Bound			
Movement:	L	T	R		L	T	R		L	T	R	
Control:	Protected				Protected				Protected			
Rights:	Include				Include				Include			
Min. Green:	7	7	7		7	7	7		7	7	7	
Lanes:	0 0	3 0	1		1 0	2 0	0		0 1	0 0	1	
Volume Module:												
Base Vol:	0	1250	334		174	1025	0		309	15	683	
Growth Adj:	1.00	1.00	1.00		1.00	1.00	1.00		1.00	1.00	1.00	
Initial Bse:	0	1250	334		174	1025	0		309	15	683	
Added Vol:	0	0	0		0	0	0		0	0	0	
PasserByVol:	0	0	0		0	0	0		0	0	0	
Initial Fut:	0	1250	334		174	1025	0		309	15	683	
User Adj:	1.00	1.00	1.00		1.00	1.00	1.00		1.00	1.00	1.00	
PHF Adj:	1.00	1.00	1.00		1.00	1.00	1.00		1.00	1.00	1.00	
PHF Volume:	0	1250	334		174	1025	0		309	15	683	
Reduct Vol:	0	0	0		0	0	0		0	0	0	
Reduced Vol:	0	1250	334		174	1025	0		309	15	683	
PCE Adj:	1.00	1.00	1.00		1.00	1.00	1.00		1.00	1.00	1.00	
MLF Adj:	1.00	1.00	1.00		1.00	1.00	1.00		1.00	1.00	1.00	
FinalVolume:	0	1250	334		174	1025	0		309	15	683	
Saturation Flow Module:												
Sat/Lane:	1900	1900	1900		1900	1900	1900		1900	1900	1900	
Adjustment:	1.00	0.91	0.85		0.95	0.95	1.00		0.95	0.95	0.85	
Lanes:	0.00	3.00	1.00		1.00	2.00	0.00		0.95	0.05	1.00	
Final Sat.:	0	5187	1615		1805	3610	0		1729	84	1615	
Capacity Analysis Module:												
Vol/Sat:	0.00	0.24	0.21		0.10	0.28	0.00		0.18	0.18	0.42	
Crit Moves:	****					****					****	
Green/Cycle:	0.00	0.28	0.28		0.11	0.33	0.00		0.40	0.48	0.48	
Volume/Cap:	0.00	0.85	0.73		0.85	0.87	0.00		0.45	0.37	0.87	
Delay/Veh:	0.0	39.0	38.5		71.2	39.2	0.0		22.5	16.4	33.6	
User DelAdj:	1.00	1.00	1.00		1.00	1.00	1.00		1.00	1.00	1.00	
AdjDel/Veh:	0.0	39.0	38.5		71.2	39.2	0.0		22.5	16.4	33.6	
LOS by Move:	A	D	D		E	D	A		C	B	C	
HCM2kAvgQ:	0	16	11		8	19	0		7	6	22	

Street Name:												
Approach:	South Bound				East Bound				West Bound			
Movement:	L	T	R		L	T	R		L	T	R	
Control:	Protected				Protected				Protected			
Rights:	Include				Include				Include			
Min. Green:	7	7	7		7	7	7		7	7	7	
Lanes:	0 0	0 1	0		0 1	0 0	1		0 0	0 0	0	
Volume Module:												
Base Vol:	0	0	0		0	0	0		0	0	0	
Growth Adj:	1.00	1.00	1.00		1.00	1.00	1.00		1.00	1.00	1.00	
Initial Bse:	0	0	0		0	0	0		0	0	0	
Added Vol:	0	0	0		0	0	0		0	0	0	
PasserByVol:	0	0	0		0	0	0		0	0	0	
Initial Fut:	0	0	0		0	0	0		0	0	0	
User Adj:	1.00	1.00	1.00		1.00	1.00	1.00		1.00	1.00	1.00	
PHF Adj:	1.00	1.00	1.00		1.00	1.00	1.00		1.00	1.00	1.00	
PHF Volume:	0	0	0		0	0	0		0	0	0	
Reduct Vol:	0	0	0		0	0	0		0	0	0	
Reduced Vol:	0	0	0		0	0	0		0	0	0	
PCE Adj:	1.00	1.00	1.00		1.00	1.00	1.00		1.00	1.00	1.00	
MLF Adj:	1.00	1.00	1.00		1.00	1.00	1.00		1.00	1.00	1.00	
FinalVolume:	0	0	0		0	0	0		0	0	0	
Saturation Flow Module:												
Sat/Lane:	1900	1900	1900		1900	1900	1900		1900	1900	1900	
Adjustment:	0.95	0.95	0.85		1.00	1.00	1.00		1.00	1.00	1.00	
Lanes:	0.95	0.05	1.00		0.00	0.00	0.00					
Final Sat.:	1729	84	1615		0	0	0					
Capacity Analysis Module:												
Vol/Sat:	0.00	0.00	0.00									
Crit Moves:		****										
Green/Cycle:	0.00	0.00	0.00									
Volume/Cap:	0.00	0.00	0.00									
Delay/Veh:	0.0	0.0	0.0									
User DelAdj:	1.00	1.00	1.00									
AdjDel/Veh:	0.0	0.0	0.0									
LOS by Move:	A	A	A									
HCM2kAvgQ:	0	0	0									

Note: Queue reported is the number of cars per lane.

Traffix 7.9.0415 (c) 2007 Dowling Assoc. Licensed to MMA, LONG BEACH, CA

Overlook Parkway Extension
Future Alt 2 (Gates Opened - No Overlook)
AM Peak Hour

Level Of Service Computation Report
2000 HCM Operations Method (Future Volume Alternative)

Intersection #3 Madison St/Indiana Ave

Cycle (sec):	100	Critical Vol./Cap.(X):	1.284
Loss Time (sec):	16 (Y+R=4.0 sec)	Average Delay (sec/veh):	113.4
Optimal Cycle:	130	Level Of Service:	F

Street Name:	Madison St						Indiana Ave					
Approach:	North Bound			South Bound			East Bound			West Bound		
Movement:	L -	T -	R	L -	T -	R	L -	T -	R	L -	T -	R
Control:	Protected			Protected			Protected			Protected		
Rights:	Include			Include			Include			Include		
Min. Green:	7	7	7	7	7	7	7	7	7	7	7	7
Lanes:	1 0	1 1	0	1 0	1 1	0	1 0	1 1	0	1 0	1 1	0
Volume Module:												
Base Vol:	89	822	50	714	458	391	190	652	26	14	302	545
Growth Adj:	1.00	1.00	1.00	1.00	1.00	1.00	1.00	1.00	1.00	1.00	1.00	1.00
Initial Bse:	89	822	50	714	458	391	190	652	26	14	302	545
Added Vol:	0	0	0	0	0	0	0	0	0	0	0	0
PasserByVol:	0	0	0	0	0	0	0	0	0	0	0	0
Initial Fut:	89	822	50	714	458	391	190	652	26	14	302	545
User Adj:	1.00	1.00	1.00	1.00	1.00	1.00	1.00	1.00	1.00	1.00	1.00	1.00
PHF Adj:	1.00	1.00	1.00	1.00	1.00	1.00	1.00	1.00	1.00	1.00	1.00	1.00
PHF Volume:	89	822	50	714	458	391	190	652	26	14	302	545
Reduct Vol:	0	0	0	0	0	0	0	0	0	0	0	0
Reduced Vol:	89	822	50	714	458	391	190	652	26	14	302	545
PCE Adj:	1.00	1.00	1.00	1.00	1.00	1.00	1.00	1.00	1.00	1.00	1.00	1.00
MLF Adj:	1.00	1.00	1.00	1.00	1.00	1.00	1.00	1.00	1.00	1.00	1.00	1.00
FinalVolume:	89	822	50	714	458	391	190	652	26	14	302	545
Saturation Flow Module:												
Sat/Lane:	1900	1900	1900	1900	1900	1900	1900	1900	1900	1900	1900	1900
Adjustment:	0.95	0.94	0.94	0.95	0.88	0.88	0.95	0.94	0.94	0.95	0.86	0.86
Lanes:	1.00	1.89	0.11	1.00	1.08	0.92	1.00	1.92	0.08	1.00	1.00	1.00
Final Sat.:	1805	3372	205	1805	1813	1548	1805	3451	138	1805	1632	1632
Capacity Analysis Module:												
Vol/Sat:	0.05	0.24	0.24	0.40	0.25	0.25	0.11	0.19	0.19	0.01	0.19	0.33
Crit Moves:		****		****			****					****
Green/Cycle:	0.11	0.19	0.19	0.31	0.39	0.39	0.08	0.25	0.25	0.09	0.26	0.26
Volume/Cap:	0.46	1.28	1.28	1.28	0.65	0.65	1.28	0.76	0.76	0.08	0.71	1.28
Delay/Veh:	43.5	179	179.3	175.7	26.1	26.1	215.2	38.5	38.5	41.7	35.6	176.1
User DelAdj:	1.00	1.00	1.00	1.00	1.00	1.00	1.00	1.00	1.00	1.00	1.00	1.00
AdjDel/Veh:	43.5	179	179.3	175.7	26.1	26.1	215.2	38.5	38.5	41.7	35.6	176.1
LOS by Move:	D	F	F	F	C	C	F	D	D	D	D	F
HCM2kAvgQ:	3	29	29	43	12	12	13	12	12	0	10	35

Note: Queue reported is the number of cars per lane.

Traffix 7.9.0415 (c) 2007 Dowling Assoc. Licensed to MMA, LONG BEACH, CA

Overlook Parkway Extension
Future Alt 2 (Gates Opened - No Overlook)
AM Peak Hour

Level Of Service Computation Report
2000 HCM Operations Method (Future Volume Alternative)

Intersection #4 Madison St/Lincoln Ave

Cycle (sec):	100	Critical Vol./Cap.(X):	0.440
Loss Time (sec):	16 (Y+R=4.0 sec)	Average Delay (sec/veh):	30.5
Optimal Cycle:	50	Level Of Service:	C

Street Name:	Madison St						Lincoln Ave					
Approach:	North Bound			South Bound			East Bound			West Bound		
Movement:	L -	T -	R	L -	T -	R	L -	T -	R	L -	T -	R
Control:	Protected			Protected			Protected			Protected		
Rights:	Include			Include			Include			Include		
Min. Green:	7	7	7	7	7	7	7	7	7	7	7	7
Lanes:	1 0	1 1	0	1 0	1 1	0	1 0	0 1	0	1 0	1 1	0
Volume Module:												
Base Vol:	72	605	9	54	204	168	186	274	32	10	241	110
Growth Adj:	1.00	1.00	1.00	1.00	1.00	1.00	1.00	1.00	1.00	1.00	1.00	1.00
Initial Bse:	72	605	9	54	204	168	186	274	32	10	241	110
Added Vol:	0	0	0	0	0	0	0	0	0	0	0	0
PasserByVol:	0	0	0	0	0	0	0	0	0	0	0	0
Initial Fut:	72	605	9	54	204	168	186	274	32	10	241	110
User Adj:	1.00	1.00	1.00	1.00	1.00	1.00	1.00	1.00	1.00	1.00	1.00	1.00
PHF Adj:	1.00	1.00	1.00	1.00	1.00	1.00	1.00	1.00	1.00	1.00	1.00	1.00
PHF Volume:	72	605	9	54	204	168	186	274	32	10	241	110
Reduct Vol:	0	0	0	0	0	0	0	0	0	0	0	0
Reduced Vol:	72	605	9	54	204	168	186	274	32	10	241	110
PCE Adj:	1.00	1.00	1.00	1.00	1.00	1.00	1.00	1.00	1.00	1.00	1.00	1.00
MLF Adj:	1.00	1.00	1.00	1.00	1.00	1.00	1.00	1.00	1.00	1.00	1.00	1.00
FinalVolume:	72	605	9	54	204	168	186	274	32	10	241	110
Saturation Flow Module:												
Sat/Lane:	1900	1900	1900	1900	1900	1900	1900	1900	1900	1900	1900	1900
Adjustment:	0.95	0.95	0.95	0.95	0.89	0.89	0.95	0.98	0.98	0.95	0.91	0.91
Lanes:	1.00	1.97	0.03	1.00	1.10	0.90	1.00	0.90	0.10	1.00	1.37	0.63
Final Sat.:	1805	3550	53	1805	1845	1519	1805	1674	196	1805	2362	1078
Capacity Analysis Module:												
Vol/Sat:	0.04	0.17	0.17	0.03	0.11	0.11	0.10	0.16	0.16	0.01	0.10	0.10
Crit Moves:		****		****				****		****		
Green/Cycle:	0.17	0.36	0.36	0.07	0.26	0.26	0.21	0.34	0.34	0.07	0.21	0.21
Volume/Cap:	0.24	0.48	0.48	0.43	0.42	0.42	0.50	0.48	0.48	0.08	0.50	0.50
Delay/Veh:	36.7	25.2	25.2	46.9	31.0	31.0	36.0	26.4	26.4	43.8	35.7	35.7
User DelAdj:	1.00	1.00	1.00	1.00	1.00	1.00	1.00	1.00	1.00	1.00	1.00	1.00
AdjDel/Veh:	36.7	25.2	25.2	46.9	31.0	31.0	36.0	26.4	26.4	43.8	35.7	35.7
LOS by Move:	D	C	C	D	C	C	D	C	C	D	D	D
HCM2kAvgQ:	2	8	8	2	5	5	6	8	8	0	5	5

Note: Queue reported is the number of cars per lane.

Traffix 7.9.0415 (c) 2007 Dowling Assoc. Licensed to MMA, LONG BEACH, CA

Overlook Parkway Extension
Future Alt 2 (Gates Opened - No Overlook)
AM Peak Hour

Level Of Service Computation Report
2000 HCM Operations Method (Future Volume Alternative)

Intersection #6 Washington St/Indiana Ave

Cycle (sec):	100	Critical Vol./Cap.(X):	0.978
Loss Time (sec):	12 (Y+R=4.0 sec)	Average Delay (sec/veh):	40.7
Optimal Cycle:	130	Level Of Service:	D

Street Name:	Washington St						Indiana Ave					
Approach:	North Bound			South Bound			East Bound			West Bound		
Movement:	L -	T -	R	L -	T -	R	L -	T -	R	L -	T -	R
Control:	Permitted			Permitted			Protected			Protected		
Rights:	Ovl			Include			Include			Include		
Min. Green:	7	7	7	7	7	7	7	7	7	7	7	7
Lanes:	1 0	0 1	0	1 0	0 1	0	1 0	1 1	0	1 0	1 1	0
Volume Module:												
Base Vol:	322	4	542	4	0	2	7	1293	125	226	591	13
Growth Adj:	1.00	1.00	1.00	1.00	1.00	1.00	1.00	1.00	1.00	1.00	1.00	1.00
Initial Bse:	322	4	542	4	0	2	7	1293	125	226	591	13
Added Vol:	0	0	0	0	0	0	0	0	0	0	0	0
PasserByVol:	0	0	0	0	0	0	0	0	0	0	0	0
Initial Fut:	322	4	542	4	0	2	7	1293	125	226	591	13
User Adj:	1.00	1.00	1.00	1.00	1.00	1.00	1.00	1.00	1.00	1.00	1.00	1.00
PHF Adj:	1.00	1.00	1.00	1.00	1.00	1.00	1.00	1.00	1.00	1.00	1.00	1.00
PHF Volume:	322	4	542	4	0	2	7	1293	125	226	591	13
Reduct Vol:	0	0	0	0	0	0	0	0	0	0	0	0
Reduced Vol:	322	4	542	4	0	2	7	1293	125	226	591	13
PCE Adj:	1.00	1.00	1.00	1.00	1.00	1.00	1.00	1.00	1.00	1.00	1.00	1.00
MLF Adj:	1.00	1.00	1.00	1.00	1.00	1.00	1.00	1.00	1.00	1.00	1.00	1.00
FinalVolume:	322	4	542	4	0	2	7	1293	125	226	591	13
Saturation Flow Module:												
Sat/Lane:	1900	1900	1900	1900	1900	1900	1900	1900	1900	1900	1900	1900
Adjustment:	0.77	0.85	0.85	0.13	1.00	0.85	0.95	0.94	0.94	0.95	0.95	0.95
Lanes:	1.00	0.01	0.99	1.00	0.00	1.00	1.00	1.82	0.18	1.00	1.96	0.04
Final Sat.:	1457	12	1605	251	0	1615	1805	3249	314	1805	3522	77
Capacity Analysis Module:												
Vol/Sat:	0.22	0.34	0.34	0.02	0.00	0.00	0.00	0.40	0.40	0.13	0.17	0.17
Crit Moves:		****						****		****		
Green/Cycle:	0.35	0.35	0.47	0.35	0.00	0.35	0.16	0.41	0.41	0.13	0.38	0.38
Volume/Cap:	0.64	0.98	0.71	0.05	0.00	0.00	0.02	0.98	0.98	0.98	0.44	0.44
Delay/Veh:	30.3	64.8	24.2	22.0	0.0	21.5	35.7	47.8	47.8	96.3	23.5	23.5
User DelAdj:	1.00	1.00	1.00	1.00	1.00	1.00	1.00	1.00	1.00	1.00	1.00	1.00
AdjDel/Veh:	30.3	64.8	24.2	22.0	0.0	21.5	35.7	47.8	47.8	96.3	23.5	23.5
LOS by Move:	C	E	C	C	A	C	D	D	D	F	C	C
HCM2kAvgQ:	9	23	14	0	0	0	0	29	29	11	7	7

Note: Queue reported is the number of cars per lane.

Traffix 7.9.0415 (c) 2007 Dowling Assoc. Licensed to MMA, LONG BEACH, CA

Overlook Parkway Extension
Future Alt 2 (Gates Opened - No Overlook)
AM Peak Hour

Level Of Service Computation Report
2000 HCM 4-Way Stop Method (Future Volume Alternative)

Intersection #7 Washington St/Lincoln Ave

Cycle (sec):	100	Critical Vol./Cap.(X):	1.952
Loss Time (sec):	0 (Y+R=4.0 sec)	Average Delay (sec/veh):	222.7
Optimal Cycle:	0	Level Of Service:	F

Street Name:	Washington St						Lincoln Ave					
Approach:	North Bound			South Bound			East Bound			West Bound		
Movement:	L -	T -	R	L -	T -	R	L -	T -	R	L -	T -	R
Control:	Stop Sign			Stop Sign			Stop Sign			Stop Sign		
Rights:	Include			Include			Include			Include		
Min. Green:	7	7	7	7	7	7	7	7	7	7	7	7
Lanes:	0 0	1! 0	0	0 0	1! 0	0	0 0	1! 0	0	0 1	0 0	1
Volume Module:												
Base Vol:	60	744	69	89	287	18	11	333	17	53	238	74
Growth Adj:	1.00	1.00	1.00	1.00	1.00	1.00	1.00	1.00	1.00	1.00	1.00	1.00
Initial Bse:	60	744	69	89	287	18	11	333	17	53	238	74
Added Vol:	0	0	0	0	0	0	0	0	0	0	0	0
PasserByVol:	0	0	0	0	0	0	0	0	0	0	0	0
Initial Fut:	60	744	69	89	287	18	11	333	17	53	238	74
User Adj:	1.00	1.00	1.00	1.00	1.00	1.00	1.00	1.00	1.00	1.00	1.00	1.00
PHF Adj:	1.00	1.00	1.00	1.00	1.00	1.00	1.00	1.00	1.00	1.00	1.00	1.00
PHF Volume:	60	744	69	89	287	18	11	333	17	53	238	74
Reduct Vol:	0	0	0	0	0	0	0	0	0	0	0	0
Reduced Vol:	60	744	69	89	287	18	11	333	17	53	238	74
PCE Adj:	1.00	1.00	1.00	1.00	1.00	1.00	1.00	1.00	1.00	1.00	1.00	1.00
MLF Adj:	1.00	1.00	1.00	1.00	1.00	1.00	1.00	1.00	1.00	1.00	1.00	1.00
FinalVolume:	60	744	69	89	287	18	11	333	17	53	238	74
Saturation Flow Module:												
Adjustment:	1.00	1.00	1.00	1.00	1.00	1.00	1.00	1.00	1.00	1.00	1.00	1.00
Lanes:	0.07	0.85	0.08	0.23	0.73	0.04	0.03	0.92	0.05	0.18	0.82	1.00
Final Sat.:	31	381	35	97	314	20	13	385	20	72	321	430
Capacity Analysis Module:												
Vol/Sat:	1.95	1.95	1.95	0.92	0.92	0.92	0.86	0.86	0.86	0.74	0.74	0.17
Crit Moves:		****				****		****			****	
Delay/Veh:	455.2	455	455.2	51.9	51.9	51.9	44.0	44.0	44.0	31.5	31.5	12.5
Delay Adj:	1.00	1.00	1.00	1.00	1.00	1.00	1.00	1.00	1.00	1.00	1.00	1.00
AdjDel/Veh:	455.2	455	455.2	51.9	51.9	51.9	44.0	44.0	44.0	31.5	31.5	12.5
LOS by Move:	F	F	F	F	F	F	E	E	E	D	D	B
ApproachDel:	455.2			51.9			44.0			27.7		
Delay Adj:	1.00			1.00			1.00			1.00		
ApprAdjDel:	455.2			51.9			44.0			27.7		
LOS by Appr:	F			F			E			D		
AllWayAvgQ:	55.2	55.2	55.2	4.9	4.9	4.9	3.8	3.8	3.8	2.2	2.2	0.2

Traffix 7.9.0415 (c) 2007 Dowling Assoc. Licensed to MMA, LONG BEACH, CA

Overlook Parkway Extension
Future Alt 2 (Gates Opened - No Overlook)
AM Peak Hour

Note: Queue reported is the number of cars per lane.

Overlook Parkway Extension
Future Alt 2 (Gates Opened - No Overlook)
AM Peak Hour

Level Of Service Computation Report
2000 HCM Operations Method (Future Volume Alternative)

Intersection #9 Washington St/Overlook Pkwy

Cycle (sec):	100	Critical Vol./Cap.(X):	0.861
Loss Time (sec):	12 (Y+R=4.0 sec)	Average Delay (sec/veh):	22.5
Optimal Cycle:	94	Level Of Service:	C

Street Name:	Washington St						Overlook Pkwy					
Approach:	North Bound			South Bound			East Bound			West Bound		
Movement:	L - T - R			L - T - R			L - T - R			L - T - R		
Control:	Protected			Protected			Protected			Protected		
Rights:	Include			Include			Include			Ovl		
Min. Green:	7	7	7	7	7	7	7	7	7	7	7	7
Lanes:	0 0	1 1	0	1 0	2 0	0	0 0	0 0	0	1 0	0 0	1
Volume Module:												
Base Vol:	0	2036	23	185	703	0	0	0	0	24	0	301
Growth Adj:	1.00	1.00	1.00	1.00	1.00	1.00	1.00	1.00	1.00	1.00	1.00	1.00
Initial Bse:	0	2036	23	185	703	0	0	0	0	24	0	301
Added Vol:	0	0	0	0	0	0	0	0	0	0	0	0
PasserByVol:	0	0	0	0	0	0	0	0	0	0	0	0
Initial Fut:	0	2036	23	185	703	0	0	0	0	24	0	301
User Adj:	1.00	1.00	1.00	1.00	1.00	1.00	1.00	1.00	1.00	1.00	1.00	1.00
PHF Adj:	1.00	1.00	1.00	1.00	1.00	1.00	1.00	1.00	1.00	1.00	1.00	1.00
PHF Volume:	0	2036	23	185	703	0	0	0	0	24	0	301
Reduct Vol:	0	0	0	0	0	0	0	0	0	0	0	0
Reduced Vol:	0	2036	23	185	703	0	0	0	0	24	0	301
PCE Adj:	1.00	1.00	1.00	1.00	1.00	1.00	1.00	1.00	1.00	1.00	1.00	1.00
MLF Adj:	1.00	1.00	1.00	1.00	1.00	1.00	1.00	1.00	1.00	1.00	1.00	1.00
FinalVolume:	0	2036	23	185	703	0	0	0	0	24	0	301
Saturation Flow Module:												
Sat/Lane:	1900	1900	1900	1900	1900	1900	1900	1900	1900	1900	1900	1900
Adjustment:	1.00	0.95	0.95	0.95	0.95	1.00	1.00	1.00	1.00	0.95	1.00	0.85
Lanes:	0.00	1.98	0.02	1.00	2.00	0.00	0.00	0.00	0.00	1.00	0.00	1.00
Final Sat.:	0	3563	40	1805	3610	0	0	0	0	1805	0	1615
Capacity Analysis Module:												
Vol/Sat:	0.00	0.57	0.57	0.10	0.19	0.00	0.00	0.00	0.00	0.01	0.00	0.19
Crit Moves:		****		****								****
Green/Cycle:	0.00	0.66	0.66	0.12	0.58	0.00	0.00	0.00	0.00	0.08	0.00	0.22
Volume/Cap:	0.00	0.86	0.86	0.86	0.34	0.00	0.00	0.00	0.00	0.16	0.00	0.86
Delay/Veh:	0.0	16.7	16.7	71.2	11.3	0.0	0.0	0.0	0.0	43.0	0.0	56.8
User DelAdj:	1.00	1.00	1.00	1.00	1.00	1.00	1.00	1.00	1.00	1.00	1.00	1.00
AdjDel/Veh:	0.0	16.7	16.7	71.2	11.3	0.0	0.0	0.0	0.0	43.0	0.0	56.8
LOS by Move:	A	B	B	E	B	A	A	A	A	D	A	E
HCM2kAvgQ:	0	29	29	8	6	0	0	0	0	1	0	12

Note: Queue reported is the number of cars per lane.

Overlook Parkway Extension
Future Alt 2 (Gates Opened - No Overlook)
AM Peak Hour

Level Of Service Computation Report
2000 HCM Operations Method (Future Volume Alternative)

Intersection #10 Riverside Ave-SR-91 WB/Arlington Ave

Cycle (sec): 100 | Critical Vol./Cap.(X): 0.990
Loss Time (sec): 12 (Y+R=4.0 sec) | Average Delay (sec/veh): 39.2
Optimal Cycle: 130 | Level Of Service: D

Street Name:	Riverside Ave-SR-91 WB						Arlington Ave					
Approach:	North Bound			South Bound			East Bound			West Bound		
Movement:	L - T - R			L - T - R			L - T - R			L - T - R		
Control:	Protected			Protected			Protected			Protected		
Rights:	Include			Ovl			Ignore			Ignore		
Min. Green:	7	7	7	7	7	7	7	7	7	7	7	7
Lanes:	0 0	0 0	0	1 1	0 0	1	1 0	3 0	1	1 0	3 0	1
Volume Module:												
Base Vol:	0	0	0	609	40	564	82	1315	159	567	1296	281
Growth Adj:	1.00	1.00	1.00	1.00	1.00	1.00	1.00	1.00	1.00	1.00	1.00	1.00
Initial Bse:	0	0	0	609	40	564	82	1315	159	567	1296	281
Added Vol:	0	0	0	0	0	0	0	0	0	0	0	0
PasserByVol:	0	0	0	0	0	0	0	0	0	0	0	0
Initial Fut:	0	0	0	609	40	564	82	1315	159	567	1296	281
User Adj:	1.00	1.00	1.00	1.00	1.00	1.00	1.00	1.00	0.00	1.00	1.00	0.00
PHF Adj:	1.00	1.00	1.00	1.00	1.00	1.00	1.00	1.00	0.00	1.00	1.00	0.00
PHF Volume:	0	0	0	609	40	564	82	1315	0	567	1296	0
Reduct Vol:	0	0	0	0	0	0	0	0	0	0	0	0
Reduced Vol:	0	0	0	609	40	564	82	1315	0	567	1296	0
PCE Adj:	1.00	1.00	1.00	1.00	1.00	1.00	1.00	1.00	0.00	1.00	1.00	0.00
MLF Adj:	1.00	1.00	1.00	1.00	1.00	1.00	1.00	1.00	0.00	1.00	1.00	0.00
FinalVolume:	0	0	0	609	40	564	82	1315	0	567	1296	0
Saturation Flow Module:												
Sat/Lane:	1900	1900	1900	1900	1900	1900	1900	1900	1900	1900	1900	1900
Adjustment:	1.00	1.00	1.00	0.93	0.93	0.85	0.95	0.91	1.00	0.95	0.91	1.00
Lanes:	0.00	0.00	0.00	1.88	0.12	1.00	1.00	3.00	1.00	1.00	3.00	1.00
Final Sat.:	0	0	0	3298	217	1615	1805	5187	1900	1805	5187	1900
Capacity Analysis Module:												
Vol/Sat:	0.00	0.00	0.00	0.18	0.18	0.35	0.05	0.25	0.00	0.31	0.25	0.00
Crit Moves:						****		****		****		
Green/Cycle:	0.00	0.00	0.00	0.26	0.29	0.42	0.13	0.26	0.00	0.33	0.46	0.00
Volume/Cap:	0.00	0.00	0.00	0.71	0.64	0.83	0.35	0.96	0.00	0.96	0.54	0.00
Delay/Veh:	0.0	0.0	0.0	36.0	32.2	34.6	40.6	52.5	0.0	60.9	19.6	0.0
User DelAdj:	1.00	1.00	1.00	1.00	1.00	1.00	1.00	1.00	1.00	1.00	1.00	1.00
AdjDel/Veh:	0.0	0.0	0.0	36.0	32.2	34.6	40.6	52.5	0.0	60.9	19.6	0.0
LOS by Move:	A	A	A	D	C	C	D	D	A	E	B	A
HCM2kAvgQ:	0	0	0	10	9	18	3	20	0	23	11	0

Note: Queue reported is the number of cars per lane.

Traffix 7.9.0415 (c) 2007 Dowling Assoc. Licensed to MMA, LONG BEACH, CA

Overlook Parkway Extension
Future Alt 2 (Gates Opened - No Overlook)
AM Peak Hour

Level Of Service Computation Report
2000 HCM Operations Method (Future Volume Alternative)

Intersection #11 Indiana Ave-SR-91 EB/Arlington Ave

Cycle (sec): 100 | Critical Vol./Cap.(X): 0.924
Loss Time (sec): 12 (Y+R=4.0 sec) | Average Delay (sec/veh): 35.3
Optimal Cycle: 122 | Level Of Service: D

Street Name:	Indiana Ave-SR-91 EB						Arlington Ave					
Approach:	North Bound			South Bound			East Bound			West Bound		
Movement:	L - T - R			L - T - R			L - T - R			L - T - R		
Control:	Protected			Protected			Protected			Protected		
Rights:	Ovl			Include			Ovl			Ignore		
Min. Green:	7	7	7	7	7	7	7	7	7	7	7	7
Lanes:	1 1	1 0	1	0 0	0 0	0	1 0	2 0	1	1 0	4 0	1
Volume Module:												
Base Vol:	224	322	703	0	0	0	209	1365	288	179	2165	363
Growth Adj:	1.00	1.00	1.00	1.00	1.00	1.00	1.00	1.00	1.00	1.00	1.00	1.00
Initial Bse:	224	322	703	0	0	0	209	1365	288	179	2165	363
Added Vol:	0	0	0	0	0	0	0	0	0	0	0	0
PasserByVol:	0	0	0	0	0	0	0	0	0	0	0	0
Initial Fut:	224	322	703	0	0	0	209	1365	288	179	2165	363
User Adj:	1.00	1.00	1.00	1.00	1.00	1.00	1.00	1.00	1.00	1.00	1.00	0.00
PHF Adj:	1.00	1.00	1.00	1.00	1.00	1.00	1.00	1.00	1.00	1.00	1.00	0.00
PHF Volume:	224	322	703	0	0	0	209	1365	288	179	2165	0
Reduct Vol:	0	0	0	0	0	0	0	0	0	0	0	0
Reduced Vol:	224	322	703	0	0	0	209	1365	288	179	2165	0
PCE Adj:	1.00	1.00	1.00	1.00	1.00	1.00	1.00	1.00	1.00	1.00	1.00	0.00
MLF Adj:	1.00	1.00	1.00	1.00	1.00	1.00	1.00	1.00	1.00	1.00	1.00	0.00
FinalVolume:	224	322	703	0	0	0	209	1365	288	179	2165	0
Saturation Flow Module:												
Sat/Lane:	1900	1900	1900	1900	1900	1900	1900	1900	1900	1900	1900	1900
Adjustment:	0.92	0.92	0.85	1.00	1.00	1.00	0.95	0.95	0.85	0.95	0.91	1.00
Lanes:	1.23	1.77	1.00	0.00	0.00	0.00	1.00	2.00	1.00	1.00	4.00	1.00
Final Sat.:	2162	3107	1615	0	0	0	1805	3610	1615	1805	6916	1900
Capacity Analysis Module:												
Vol/Sat:	0.10	0.10	0.44	0.00	0.00	0.00	0.12	0.38	0.18	0.10	0.31	0.00
Crit Moves:			****					****		****		
Green/Cycle:	0.26	0.36	0.47	0.00	0.00	0.00	0.14	0.41	0.67	0.11	0.38	0.00
Volume/Cap:	0.40	0.28	0.92	0.00	0.00	0.00	0.83	0.92	0.27	0.92	0.83	0.00
Delay/Veh:	30.8	22.7	41.7	0.0	0.0	0.0	62.1	38.2	6.8	87.9	30.6	0.0
User DelAdj:	1.00	1.00	1.00	1.00	1.00	1.00	1.00	1.00	1.00	1.00	1.00	1.00
AdjDel/Veh:	30.8	22.7	41.7	0.0	0.0	0.0	62.1	38.2	6.8	87.9	30.6	0.0
LOS by Move:	C	C	D	A	A	A	E	D	A	F	C	A
HCM2kAvgQ:	5	4	25	0	0	0	9	25	4	9	19	0

Note: Queue reported is the number of cars per lane.

Traffix 7.9.0415 (c) 2007 Dowling Assoc. Licensed to MMA, LONG BEACH, CA

Overlook Parkway Extension
Future Alt 2 (Gates Opened - No Overlook)
AM Peak Hour

Level Of Service Computation Report
2000 HCM Operations Method (Future Volume Alternative)

Intersection #12 Victoria Ave/Arlington Ave

Cycle (sec):	100	Critical Vol./Cap.(X):	1.185
Loss Time (sec):	16 (Y+R=4.0 sec)	Average Delay (sec/veh):	94.0
Optimal Cycle:	130	Level Of Service:	F

Street Name:	Victoria Ave									Arlington Ave		
Approach:	North Bound			South Bound			East Bound			West Bound		
Movement:	L -	T -	R	L -	T -	R	L -	T -	R	L -	T -	R
Control:	Protected			Protected			Protected			Protected		
Rights:	Ovl			Include			Include			Include		
Min. Green:	7	7	7	7	7	7	7	7	7	7	7	7
Lanes:	1 0	1 0	1	1 0	1 0	1	1 0	2 1	0	1 0	2 1	0
Volume Module:												
Base Vol:	28	475	453	230	305	190	287	1533	8	404	1994	335
Growth Adj:	1.00	1.00	1.00	1.00	1.00	1.00	1.00	1.00	1.00	1.00	1.00	1.00
Initial Bse:	28	475	453	230	305	190	287	1533	8	404	1994	335
Added Vol:	0	0	0	0	0	0	0	0	0	0	0	0
PasserByVol:	0	0	0	0	0	0	0	0	0	0	0	0
Initial Fut:	28	475	453	230	305	190	287	1533	8	404	1994	335
User Adj:	1.00	1.00	1.00	1.00	1.00	1.00	1.00	1.00	1.00	1.00	1.00	1.00
PHF Adj:	1.00	1.00	1.00	1.00	1.00	1.00	1.00	1.00	1.00	1.00	1.00	1.00
PHF Volume:	28	475	453	230	305	190	287	1533	8	404	1994	335
Reduct Vol:	0	0	0	0	0	0	0	0	0	0	0	0
Reduced Vol:	28	475	453	230	305	190	287	1533	8	404	1994	335
PCE Adj:	1.00	1.00	1.00	1.00	1.00	1.00	1.00	1.00	1.00	1.00	1.00	1.00
MLF Adj:	1.00	1.00	1.00	1.00	1.00	1.00	1.00	1.00	1.00	1.00	1.00	1.00
FinalVolume:	28	475	453	230	305	190	287	1533	8	404	1994	335
Saturation Flow Module:												
Sat/Lane:	1900	1900	1900	1900	1900	1900	1900	1900	1900	1900	1900	1900
Adjustment:	0.95	1.00	0.85	0.95	1.00	0.85	0.95	0.91	0.91	0.95	0.89	0.89
Lanes:	1.00	1.00	1.00	1.00	1.00	1.00	1.00	2.98	0.02	1.00	2.57	0.43
Final Sat.:	1805	1900	1615	1805	1900	1615	1805	5155	27	1805	4343	730
Capacity Analysis Module:												
Vol/Sat:	0.02	0.25	0.28	0.13	0.16	0.12	0.16	0.30	0.30	0.22	0.46	0.46
Crit Moves:		****		****			****				****	
Green/Cycle:	0.10	0.21	0.43	0.11	0.22	0.22	0.13	0.30	0.30	0.22	0.39	0.39
Volume/Cap:	0.16	1.19	0.64	1.19	0.72	0.53	1.19	1.00	1.00	1.00	1.19	1.19
Delay/Veh:	41.9	145	24.3	168.0	42.2	35.8	160.5	57.9	57.9	83.4	119	119.5
User DelAdj:	1.00	1.00	1.00	1.00	1.00	1.00	1.00	1.00	1.00	1.00	1.00	1.00
AdjDel/Veh:	41.9	145	24.3	168.0	42.2	35.8	160.5	57.9	57.9	83.4	119	119.5
LOS by Move:	D	F	C	F	D	D	F	E	E	F	F	F
HCM2kAvgQ:	1	27	12	14	10	6	17	24	24	18	45	45

Note: Queue reported is the number of cars per lane.

Traffix 7.9.0415 (c) 2007 Dowling Assoc. Licensed to MMA, LONG BEACH, CA

Overlook Parkway Extension
Future Alt 2 (Gates Opened - No Overlook)
AM Peak Hour

Level Of Service Computation Report
2000 HCM Operations Method (Future Volume Alternative)

Intersection #13 Alessandro Blvd/Arlington Ave

Cycle (sec):	100	Critical Vol./Cap.(X):	1.082
Loss Time (sec):	16 (Y+R=4.0 sec)	Average Delay (sec/veh):	68.6
Optimal Cycle:	130	Level Of Service:	E

Street Name:	Alessandro Blvd									Arlington Ave		
Approach:	North Bound			South Bound			East Bound			West Bound		
Movement:	L -	T -	R	L -	T -	R	L -	T -	R	L -	T -	R
Control:	Protected			Protected			Protected			Protected		
Rights:	Ovl			Include			Ovl			Ovl		
Min. Green:	7	7	7	7	7	7	7	7	7	7	7	7
Lanes:	2 0	2 0	1	2 0	2 1	0	1 0	2 0	2	2 0	2 0	1
Volume Module:												
Base Vol:	1585	1342	365	408	663	84	58	999	1044	115	865	280
Growth Adj:	1.00	1.00	1.00	1.00	1.00	1.00	1.00	1.00	1.00	1.00	1.00	1.00
Initial Bse:	1585	1342	365	408	663	84	58	999	1044	115	865	280
Added Vol:	0	0	0	0	0	0	0	0	0	0	0	0
PasserByVol:	0	0	0	0	0	0	0	0	0	0	0	0
Initial Fut:	1585	1342	365	408	663	84	58	999	1044	115	865	280
User Adj:	1.00	1.00	1.00	1.00	1.00	1.00	1.00	1.00	1.00	1.00	1.00	1.00
PHF Adj:	1.00	1.00	1.00	1.00	1.00	1.00	1.00	1.00	1.00	1.00	1.00	1.00
PHF Volume:	1585	1342	365	408	663	84	58	999	1044	115	865	280
Reduct Vol:	0	0	0	0	0	0	0	0	0	0	0	0
Reduced Vol:	1585	1342	365	408	663	84	58	999	1044	115	865	280
PCE Adj:	1.00	1.00	1.00	1.00	1.00	1.00	1.00	1.00	1.00	1.00	1.00	1.00
MLF Adj:	1.00	1.00	1.00	1.00	1.00	1.00	1.00	1.00	1.00	1.00	1.00	1.00
FinalVolume:	1585	1342	365	408	663	84	58	999	1044	115	865	280
Saturation Flow Module:												
Sat/Lane:	1900	1900	1900	1900	1900	1900	1900	1900	1900	1900	1900	1900
Adjustment:	0.92	0.95	0.85	0.92	0.89	0.89	0.95	0.95	0.75	0.92	0.95	0.85
Lanes:	2.00	2.00	1.00	2.00	2.66	0.34	1.00	2.00	2.00	2.00	2.00	1.00
Final Sat.:	3502	3610	1615	3502	4525	573	1805	3610	2842	3502	3610	1615
Capacity Analysis Module:												
Vol/Sat:	0.45	0.37	0.23	0.12	0.15	0.15	0.03	0.28	0.37	0.03	0.24	0.17
Crit Moves:	****				****			****		****		
Green/Cycle:	0.40	0.40	0.47	0.13	0.13	0.13	0.07	0.24	0.64	0.07	0.24	0.37
Volume/Cap:	1.14	0.93	0.48	0.93	1.14	1.14	0.45	1.14	0.57	0.47	0.99	0.47
Delay/Veh:	101.3	39.1	18.6	69.0	123	123.1	47.1	114	10.6	46.1	65.2	24.7
User DelAdj:	1.00	1.00	1.00	1.00	1.00	1.00	1.00	1.00	1.00	1.00	1.00	1.00
AdjDel/Veh:	101.3	39.1	18.6	69.0	123	123.1	47.1	114	10.6	46.1	65.2	24.7
LOS by Move:	F	D	B	E	F	F	D	F	B	D	E	C
HCM2kAvgQ:	41	25	8	10	16	16	2	28	11	2	20	7

Note: Queue reported is the number of cars per lane.

Traffix 7.9.0415 (c) 2007 Dowling Assoc. Licensed to MMA, LONG BEACH, CA

Overlook Parkway Extension
Future Alt 2 (Gates Opened - No Overlook)
AM Peak Hour

Level Of Service Computation Report
2000 HCM Operations Method (Future Volume Alternative)

Intersection #14 Alessandro Blvd/Overlook Pkwy

Cycle (sec):	100	Critical Vol./Cap.(X):	1.221
Loss Time (sec):	16 (Y+R=4.0 sec)	Average Delay (sec/veh):	83.5
Optimal Cycle:	130	Level Of Service:	F

Street Name:	Alessandro Blvd						Overlook Pkwy					
Approach:	North Bound			South Bound			East Bound			West Bound		
Movement:	L -	T -	R	L -	T -	R	L -	T -	R	L -	T -	R
Control:	Protected			Protected			Protected			Protected		
Rights:	Include			Include			Include			Include		
Min. Green:	7	7	7	7	7	7	7	7	7	7	7	7
Lanes:	1 0	3 0	1	1 0	2 1	0	1 0	1 1	0	2 0	1 1	0
Volume Module:												
Base Vol:	9	3053	1364	39	1609	12	28	16	13	528	27	103
Growth Adj:	1.00	1.00	1.00	1.00	1.00	1.00	1.00	1.00	1.00	1.00	1.00	1.00
Initial Bse:	9	3053	1364	39	1609	12	28	16	13	528	27	103
Added Vol:	0	0	0	0	0	0	0	0	0	0	0	0
PasserByVol:	0	0	0	0	0	0	0	0	0	0	0	0
Initial Fut:	9	3053	1364	39	1609	12	28	16	13	528	27	103
User Adj:	1.00	1.00	1.00	1.00	1.00	1.00	1.00	1.00	1.00	1.00	1.00	1.00
PHF Adj:	1.00	1.00	1.00	1.00	1.00	1.00	1.00	1.00	1.00	1.00	1.00	1.00
PHF Volume:	9	3053	1364	39	1609	12	28	16	13	528	27	103
Reduct Vol:	0	0	0	0	0	0	0	0	0	0	0	0
Reduced Vol:	9	3053	1364	39	1609	12	28	16	13	528	27	103
PCE Adj:	1.00	1.00	1.00	1.00	1.00	1.00	1.00	1.00	1.00	1.00	1.00	1.00
MLF Adj:	1.00	1.00	1.00	1.00	1.00	1.00	1.00	1.00	1.00	1.00	1.00	1.00
FinalVolume:	9	3053	1364	39	1609	12	28	16	13	528	27	103
Saturation Flow Module:												
Sat/Lane:	1900	1900	1900	1900	1900	1900	1900	1900	1900	1900	1900	1900
Adjustment:	0.95	0.91	0.85	0.95	0.91	0.91	0.95	0.89	0.89	0.92	0.84	0.84
Lanes:	1.00	3.00	1.00	1.00	2.98	0.02	1.00	1.10	0.90	2.00	1.00	1.00
Final Sat.:	1805	5187	1615	1805	5143	38	1805	1858	1510	3502	1590	1590
Capacity Analysis Module:												
Vol/Sat:	0.00	0.59	0.84	0.02	0.31	0.31	0.02	0.01	0.01	0.15	0.02	0.06
Crit Moves:			****	****				****		****		
Green/Cycle:	0.12	0.59	0.59	0.07	0.54	0.54	0.09	0.07	0.07	0.11	0.09	0.09
Volume/Cap:	0.04	0.99	1.42	0.31	0.58	0.58	0.18	0.12	0.12	1.42	0.19	0.74
Delay/Veh:	38.9	34.2	216.3	45.6	15.5	15.5	42.8	43.9	43.9	249.7	42.4	59.4
User DelAdj:	1.00	1.00	1.00	1.00	1.00	1.00	1.00	1.00	1.00	1.00	1.00	1.00
AdjDel/Veh:	38.9	34.2	216.3	45.6	15.5	15.5	42.8	43.9	43.9	249.7	42.4	59.4
LOS by Move:	D	C	F	D	B	B	D	D	D	F	D	E
HCM2kAvgQ:	0	42	92	1	12	12	1	1	1	20	1	5

Note: Queue reported is the number of cars per lane.

Traffix 7.9.0415 (c) 2007 Dowling Assoc. Licensed to MMA, LONG BEACH, CA

Overlook Parkway Extension
Future Alt 2 (Gates Opened - No Overlook)
AM Peak Hour

Level Of Service Computation Report
2000 HCM Operations Method (Future Volume Alternative)

Intersection #15 Alessandro Blvd/Trautwein Rd

Cycle (sec):	100	Critical Vol./Cap.(X):	0.973
Loss Time (sec):	12 (Y+R=4.0 sec)	Average Delay (sec/veh):	57.9
Optimal Cycle:	130	Level Of Service:	E

Street Name:	Alessandro Blvd						Trautwein Rd					
Approach:	North Bound			South Bound			East Bound			West Bound		
Movement:	L -	T -	R	L -	T -	R	L -	T -	R	L -	T -	R
Control:	Protected			Protected			Protected			Protected		
Rights:	Include			Ignore			Ignore			Include		
Min. Green:	7	7	7	7	7	7	7	7	7	7	7	7
Lanes:	2 0	3 0	0	0 0	3 0	1	3 0	0 0	1	0 0	0 0	0
Volume Module:												
Base Vol:	96	2032	0	0	1318	744	2441	0	223	0	0	0
Growth Adj:	1.00	1.00	1.00	1.00	1.00	1.00	1.00	1.00	1.00	1.00	1.00	1.00
Initial Bse:	96	2032	0	0	1318	744	2441	0	223	0	0	0
Added Vol:	0	0	0	0	0	0	0	0	0	0	0	0
PasserByVol:	0	0	0	0	0	0	0	0	0	0	0	0
Initial Fut:	96	2032	0	0	1318	744	2441	0	223	0	0	0
User Adj:	1.00	1.00	1.00	1.00	1.00	0.00	1.00	1.00	0.00	1.00	1.00	1.00
PHF Adj:	1.00	1.00	1.00	1.00	1.00	0.00	1.00	1.00	0.00	1.00	1.00	1.00
PHF Volume:	96	2032	0	0	1318	0	2441	0	0	0	0	0
Reduct Vol:	0	0	0	0	0	0	0	0	0	0	0	0
Reduced Vol:	96	2032	0	0	1318	0	2441	0	0	0	0	0
PCE Adj:	1.00	1.00	1.00	1.00	1.00	0.00	1.00	1.00	0.00	1.00	1.00	1.00
MLF Adj:	1.00	1.00	1.00	1.00	1.00	0.00	1.00	1.00	0.00	1.00	1.00	1.00
FinalVolume:	96	2032	0	0	1318	0	2441	0	0	0	0	0
Saturation Flow Module:												
Sat/Lane:	1900	1900	1900	1900	1900	1900	1900	1900	1900	1900	1900	1900
Adjustment:	0.92	0.91	1.00	1.00	0.91	1.00	0.92	1.00	1.00	1.00	1.00	1.00
Lanes:	2.00	3.00	0.00	0.00	3.00	1.00	3.00	0.00	1.00	0.00	0.00	0.00
Final Sat.:	3502	5187	0	0	5187	1900	5253	0	1900	0	0	0
Capacity Analysis Module:												
Vol/Sat:	0.03	0.39	0.00	0.00	0.25	0.00	0.46	0.00	0.00	0.00	0.00	0.00
Crit Moves:		****		****			****					
Green/Cycle:	0.10	0.37	0.00	0.00	0.35	0.00	0.44	0.00	0.00	0.00	0.00	0.00
Volume/Cap:	0.29	1.06	0.00	0.00	0.74	0.00	1.06	0.00	0.00	0.00	0.00	0.00
Delay/Veh:	42.6	69.1	0.0	0.0	30.4	0.0	64.1	0.0	0.0	0.0	0.0	0.0
User DelAdj:	1.00	1.00	1.00	1.00	1.00	1.00	1.00	1.00	1.00	1.00	1.00	1.00
AdjDel/Veh:	42.6	69.1	0.0	0.0	30.4	0.0	64.1	0.0	0.0	0.0	0.0	0.0
LOS by Move:	D	E	A	A	C	A	E	A	A	A	A	A
HCM2kAvgQ:	2	33	0	0	14	0	37	0	0	0	0	0

Note: Queue reported is the number of cars per lane.

Traffix 7.9.0415 (c) 2007 Dowling Assoc. Licensed to MMA, LONG BEACH, CA

Overlook Parkway Extension
Future Alt 2 (Gates Opened - No Overlook)
AM Peak Hour

Level Of Service Computation Report
2000 HCM 4-Way Stop Method (Future Volume Alternative)

Intersection #16 Crystal View Ter/Overlook Pkwy

Cycle (sec):	100	Critical Vol./Cap.(X):	0.316
Loss Time (sec):	0 (Y+R=4.0 sec)	Average Delay (sec/veh):	8.9
Optimal Cycle:	0	Level Of Service:	A

Street Name:	Crystal View Ter							Overlook Pkwy					
Approach:	North Bound			South Bound			East Bound			West Bound			
Movement:	L	T	R	L	T	R	L	T	R	L	T	R	
Control:	Stop Sign			Stop Sign			Stop Sign			Stop Sign			
Rights:	Include			Include			Include			Include			
Min. Green:	7	7	7	7	7	7	7	7	7	7	7	7	
Lanes:	1 0	0 0	0	0 0	1! 0	0	1 0	1 1	0	1 0	1 1	0	
Volume Module:													
Base Vol:	248	0	0	0	0	0	0	0	166	0	0	0	
Growth Adj:	1.00	1.00	1.00	1.00	1.00	1.00	1.00	1.00	1.00	1.00	1.00	1.00	
Initial Bse:	248	0	0	0	0	0	0	0	166	0	0	0	
Added Vol:	0	0	0	0	0	0	0	0	0	0	0	0	
PasserByVol:	0	0	0	0	0	0	0	0	0	0	0	0	
Initial Fut:	248	0	0	0	0	0	0	0	166	0	0	0	
User Adj:	1.00	1.00	1.00	1.00	1.00	1.00	1.00	1.00	1.00	1.00	1.00	1.00	
PHF Adj:	1.00	1.00	1.00	1.00	1.00	1.00	1.00	1.00	1.00	1.00	1.00	1.00	
PHF Volume:	248	0	0	0	0	0	0	0	166	0	0	0	
Reduct Vol:	0	0	0	0	0	0	0	0	0	0	0	0	
Reduced Vol:	248	0	0	0	0	0	0	0	166	0	0	0	
PCE Adj:	1.00	1.00	1.00	1.00	1.00	1.00	1.00	1.00	1.00	1.00	1.00	1.00	
MLF Adj:	1.00	1.00	1.00	1.00	1.00	1.00	1.00	1.00	1.00	1.00	1.00	1.00	
FinalVolume:	248	0	0	0	0	0	0	0	166	0	0	0	
Saturation Flow Module:													
Adjustment:	1.00	1.00	1.00	1.00	1.00	1.00	1.00	1.00	1.00	1.00	1.00	1.00	
Lanes:	1.00	0.00	0.00	0.00	1.00	0.00	1.00	1.00	1.00	1.00	2.00	0.00	
Final Sat.:	785	0	0	0	758	0	625	685	790	603	1315	0	
Capacity Analysis Module:													
Vol/Sat:	0.32	xxxx	xxxx	xxxx	0.00	xxxx	0.00	0.00	0.21	0.00	0.00	xxxx	
Crit Moves:	****				****				****		****		
Delay/Veh:	9.5	0.0	0.0	0.0	0.0	0.0	0.0	0.0	8.2	0.0	0.0	0.0	
Delay Adj:	1.00	1.00	1.00	1.00	1.00	1.00	1.00	1.00	1.00	1.00	1.00	1.00	
AdjDel/Veh:	9.5	0.0	0.0	0.0	0.0	0.0	0.0	0.0	8.2	0.0	0.0	0.0	
LOS by Move:	A	*	*	*	*	*	*	*	A	*	*	*	
ApproachDel:	9.5			xxxxxx			8.2			xxxxxx			
Delay Adj:	1.00			xxxxx			1.00			xxxxx			
ApprAdjDel:	9.5			xxxxxx			8.2			xxxxxx			
LOS by Appr:	A			*			A			*			
AllWayAvgQ:	0.4	0.4	0.4	0.0	0.0	0.0	0.0	0.0	0.2	0.0	0.0	0.0	

Overlook Parkway Extension
Future Alt 2 (Gates Opened - No Overlook)
AM Peak Hour

Note: Queue reported is the number of cars per lane.

Overlook Parkway Extension
Future Alt 2 (Gates Opened - No Overlook)
AM Peak Hour

Level Of Service Computation Report
2000 HCM Unsignalized Method (Future Volume Alternative)

Intersection #17 Kingdom Dr/Overlook Pkwy

Average Delay (sec/veh): 3.2 Worst Case Level Of Service: B[11.2]

Street Name:	Kingdom Dr									Overlook Pkwy								
Approach:	North Bound					South Bound				East Bound					West Bound			
Movement:	L	-	T	-	R	L	-	T	-	R	L	-	T	-	R	L	-	T	-	R
Control:	Stop Sign					Stop Sign					Uncontrolled					Uncontrolled				
Rights:	Include					Include					Include					Include				
Lanes:	0	0	1!	0	0	1	0	0	0	0	1	0	1	1	0	1	0	1	1	0
Volume Module:																				
Base Vol:	104	0	36		7	0		0		0	120		33		12	230		0		
Growth Adj:	1.00	1.00	1.00		1.00	1.00		1.00		1.00	1.00		1.00		1.00	1.00		1.00		
Initial Bse:	104	0	36		7	0		0		0	120		33		12	230		0		
Added Vol:	0	0	0		0	0		0		0	0		0		0	0		0		
PasserByVol:	0	0	0		0	0		0		0	0		0		0	0		0		
Initial Fut:	104	0	36		7	0		0		0	120		33		12	230		0		
User Adj:	1.00	1.00	1.00		1.00	1.00		1.00		1.00	1.00		1.00		1.00	1.00		1.00		
PHF Adj:	1.00	1.00	1.00		1.00	1.00		1.00		1.00	1.00		1.00		1.00	1.00		1.00		
PHF Volume:	104	0	36		7	0		0		0	120		33		12	230		0		
Reduct Vol:	0	0	0		0	0		0		0	0		0		0	0		0		
FinalVolume:	104	0	36		7	0		0		0	120		33		12	230		0		
Critical Gap Module:																				
Critical Gp:	7.5	6.5	6.9		7.5	xxxx	xxxxx	xxxxx	xxxx	xxxxx	4.1	xxxx	xxxxx							
FollowUpTim:	3.5	4.0	3.3		3.5	xxxx	xxxxx	xxxxx	xxxx	xxxxx	2.2	xxxx	xxxxx							
Capacity Module:																				
Cnflict Vol:	276	391	77		314	xxxx	xxxxx	xxxx	xxxx	xxxxx	153	xxxx	xxxxx							
Potent Cap.:	660	548	976		620	xxxx	xxxxx	xxxx	xxxx	xxxxx	1440	xxxx	xxxxx							
Move Cap.:	656	544	976		594	xxxx	xxxxx	xxxx	xxxx	xxxxx	1440	xxxx	xxxxx							
Volume/Cap:	0.16	0.00	0.04		0.01	xxxx	xxxx	xxxx	xxxx	xxxx	0.01	xxxx	xxxx							
Level Of Service Module:																				
2Way95thQ:	xxxx	xxxx	xxxxx		0.0	xxxx	xxxxx	xxxx	xxxx	xxxxx	0.0	xxxx	xxxxx							
Control Del:	xxxxx	xxxx	xxxxx		11.1	xxxx	xxxxx	xxxxx	xxxx	xxxxx	7.5	xxxx	xxxxx							
LOS by Move:	*	*	*		B	*	*	*	*	*	A	*	*							
Movement:	LT -	LTR -	RT		LT -	LTR -	RT	LT -	LTR -	RT	LT -	LTR -	RT							
Shared Cap.:	xxxx	717	xxxxx		xxxx	xxxx	xxxxx	xxxx	xxxx	xxxxx	xxxx	xxxx	xxxxx							
SharedQueue:	xxxxx	0.7	xxxxx		xxxxx	xxxx	xxxxx	xxxxx	xxxx	xxxxx	xxxxx	xxxx	xxxxx							
Shrd ConDel:	xxxxx	11.2	xxxxx		xxxxx	xxxx	xxxxx	xxxxx	xxxx	xxxxx	xxxxx	xxxx	xxxxx							
Shared LOS:	*	B	*		*	*	*	*	*	*	*	*	*							
ApproachDel:	11.2				11.1			xxxxxx			xxxxxx									
ApproachLOS:	B				B			*			*									

Note: Queue reported is the number of cars per lane.

Overlook Parkway Extension
Future Alt 2 (Gates Opened - No Overlook)
AM Peak Hour

Level Of Service Computation Report
2000 HCM Unsignalized Method (Future Volume Alternative)

Intersection #18 Kingdom Dr/Green Orchard Pl

Average Delay (sec/veh): 4.6 Worst Case Level Of Service: A[8.9]

Street Name:	Kingdom Dr									Green Orchard Pl								
Approach:	North Bound					South Bound				East Bound					West Bound			
Movement:	L	-	T	-	R	L	-	T	-	R	L	-	T	-	R	L	-	T	-	R
Control:	Uncontrolled					Uncontrolled					Stop Sign					Stop Sign				
Rights:	Include					Include					Include					Include				
Lanes:	0	0	0	1	0	0	1	0	0	0	0	0	0	0	0	0	0	1!	0	0
Volume Module:																				
Base Vol:	0	68		3		26	12		0		0		0		0	1		0		73
Growth Adj:	1.00	1.00		1.00		1.00	1.00		1.00		1.00		1.00		1.00	1.00		1.00		1.00
Initial Bse:	0	68		3		26	12		0		0		0		0	1		0		73
Added Vol:	0	0		0		0	0		0		0		0		0	0		0		0
PasserByVol:	0	0		0		0	0		0		0		0		0	0		0		0
Initial Fut:	0	68		3		26	12		0		0		0		0	1		0		73
User Adj:	1.00	1.00		1.00		1.00	1.00		1.00		1.00		1.00		1.00	1.00		1.00		1.00
PHF Adj:	1.00	1.00		1.00		1.00	1.00		1.00		1.00		1.00		1.00	1.00		1.00		1.00
PHF Volume:	0	68		3		26	12		0		0		0		0	1		0		73
Reduct Vol:	0	0		0		0	0		0		0		0		0	0		0		0
FinalVolume:	0	68		3		26	12		0		0		0		0	1		0		73
Critical Gap Module:																				
Critical Gp:	xxxxx	xxxx	xxxxx		4.1	xxxx	xxxxx	xxxxx	xxxx	xxxxx	6.4	6.5		6.2						
FollowUpTim:	xxxxx	xxxx	xxxxx		2.2	xxxx	xxxxx	xxxxx	xxxx	xxxxx	3.5	4.0		3.3						
Capacity Module:																				
Cnflict Vol:	xxxx	xxxx	xxxxx		71	xxxx	xxxxx	xxxx	xxxx	xxxxx	134	134		70						
Potent Cap.:	xxxx	xxxx	xxxxx		1542	xxxx	xxxxx	xxxx	xxxx	xxxxx	865	761		999						
Move Cap.:	xxxx	xxxx	xxxxx		1542	xxxx	xxxxx	xxxx	xxxx	xxxxx	854	748		999						
Volume/Cap:	xxxx	xxxx	xxxx		0.02	xxxx	xxxx	xxxx	xxxx	xxxx	0.00	0.00		0.07						
Level Of Service Module:																				
2Way95thQ:	xxxx	xxxx	xxxxx		0.1	xxxx	xxxxx	xxxx	xxxx	xxxxx	xxxx	xxxx	xxxxx							
Control Del:	xxxxx	xxxx	xxxxx		7.4	xxxx	xxxxx	xxxxx	xxxx	xxxxx	xxxxx	xxxx	xxxxx							
LOS by Move:	*	*	*		A	*	*	*	*	*	*	*	*							
Movement:	LT -	LTR -	RT		LT -	LTR -	RT	LT -	LTR -	RT	LT -	LTR -	RT							
Shared Cap.:	xxxx	xxxx	xxxxx		xxxx	xxxx	xxxxx	xxxx	xxxx	xxxxx	xxxx	997	xxxxx							
SharedQueue:	xxxxx	xxxx	xxxxx		0.1	xxxx	xxxxx	xxxxx	xxxx	xxxxx	xxxxx	0.2	xxxxx							
Shrd ConDel:	xxxxx	xxxx	xxxxx		7.4	xxxx	xxxxx	xxxxx	xxxx	xxxxx	xxxxx	8.9	xxxxx							
Shared LOS:	*	*	*		A	*	*	*	*	*	*	A	*							
ApproachDel:	xxxxxx				xxxxxx			xxxxxx			8.9									
ApproachLOS:	*				*			*			A									

Note: Queue reported is the number of cars per lane.

Overlook Parkway Extension
Future Alt 2 (Gates Opened - No Overlook)
AM Peak Hour

Level Of Service Computation Report
2000 HCM Operations Method (Future Volume Alternative)

Intersection #19 Trautwein Rd/John F. Kennedy Dr

Cycle (sec):	100	Critical Vol./Cap.(X):	1.126
Loss Time (sec):	16 (Y+R=4.0 sec)	Average Delay (sec/veh):	94.8
Optimal Cycle:	130	Level Of Service:	F

Street Name:	Trautwein Rd						John F. Kennedy Dr					
Approach:	North Bound			South Bound			East Bound			West Bound		
Movement:	L -	T -	R	L -	T -	R	L -	T -	R	L -	T -	R
Control:	Protected			Protected			Protected			Protected		
Rights:	Include			Ovl			Include			Include		
Min. Green:	7	7	7	7	7	7	7	7	7	7	7	7
Lanes:	1 0	2 0	1	1 0	2 0	1	2 0	1 0	1	1 0	0 1	0
Volume Module:												
Base Vol:	175	2099	76	7	752	894	897	99	116	118	129	60
Growth Adj:	1.00	1.00	1.00	1.00	1.00	1.00	1.00	1.00	1.00	1.00	1.00	1.00
Initial Bse:	175	2099	76	7	752	894	897	99	116	118	129	60
Added Vol:	0	0	0	0	0	0	0	0	0	0	0	0
PasserByVol:	0	0	0	0	0	0	0	0	0	0	0	0
Initial Fut:	175	2099	76	7	752	894	897	99	116	118	129	60
User Adj:	1.00	1.00	1.00	1.00	1.00	1.00	1.00	1.00	1.00	1.00	1.00	1.00
PHF Adj:	1.00	1.00	1.00	1.00	1.00	1.00	1.00	1.00	1.00	1.00	1.00	1.00
PHF Volume:	175	2099	76	7	752	894	897	99	116	118	129	60
Reduct Vol:	0	0	0	0	0	0	0	0	0	0	0	0
Reduced Vol:	175	2099	76	7	752	894	897	99	116	118	129	60
PCE Adj:	1.00	1.00	1.00	1.00	1.00	1.00	1.00	1.00	1.00	1.00	1.00	1.00
MLF Adj:	1.00	1.00	1.00	1.00	1.00	1.00	1.00	1.00	1.00	1.00	1.00	1.00
FinalVolume:	175	2099	76	7	752	894	897	99	116	118	129	60
Saturation Flow Module:												
Sat/Lane:	1900	1900	1900	1900	1900	1900	1900	1900	1900	1900	1900	1900
Adjustment:	0.95	0.95	0.85	0.95	0.95	0.85	0.92	1.00	0.85	0.95	0.95	0.95
Lanes:	1.00	2.00	1.00	1.00	2.00	1.00	2.00	1.00	1.00	1.00	0.68	0.32
Final Sat.:	1805	3610	1615	1805	3610	1615	3502	1900	1615	1805	1235	574
Capacity Analysis Module:												
Vol/Sat:	0.10	0.58	0.05	0.00	0.21	0.55	0.26	0.05	0.07	0.07	0.10	0.10
Crit Moves:		****		****			****				****	
Green/Cycle:	0.13	0.48	0.48	0.07	0.41	0.62	0.21	0.15	0.15	0.15	0.09	0.09
Volume/Cap:	0.72	1.22	0.10	0.06	0.51	0.89	1.22	0.35	0.48	0.45	1.22	1.22
Delay/Veh:	51.8	132	14.5	43.6	22.2	26.3	152.1	38.9	40.5	40.3	191	190.6
User DelAdj:	1.00	1.00	1.00	1.00	1.00	1.00	1.00	1.00	1.00	1.00	1.00	1.00
AdjDel/Veh:	51.8	132	14.5	43.6	22.2	26.3	152.1	38.9	40.5	40.3	191	190.6
LOS by Move:	D	F	B	D	C	C	F	D	D	D	F	F
HCM2kAvgQ:	7	61	1	0	9	27	27	3	4	4	13	13

Note: Queue reported is the number of cars per lane.

Traffix 7.9.0415 (c) 2007 Dowling Assoc. Licensed to MMA, LONG BEACH, CA

Overlook Parkway Extension
Future Alt 2 (Gates Opened - No Overlook)
AM Peak Hour

Level Of Service Computation Report
2000 HCM Operations Method (Future Volume Alternative)

Intersection #20 Washington St/Bradley St

Cycle (sec):	100	Critical Vol./Cap.(X):	0.831
Loss Time (sec):	12 (Y+R=4.0 sec)	Average Delay (sec/veh):	27.6
Optimal Cycle:	85	Level Of Service:	C

Street Name:	Washington St						Bradley St					
Approach:	North Bound			South Bound			East Bound			West Bound		
Movement:	L -	T -	R	L -	T -	R	L -	T -	R	L -	T -	R
Control:	Protected			Protected			Permitted			Permitted		
Rights:	Include			Include			Include			Include		
Min. Green:	7	7	7	7	7	7	7	7	7	7	7	7
Lanes:	1 0	1 1	0	1 0	1 1	0	0 0	1! 0	0	0 0	1! 0	0
Volume Module:												
Base Vol:	388	1877	23	60	641	15	15	27	194	32	62	167
Growth Adj:	1.00	1.00	1.00	1.00	1.00	1.00	1.00	1.00	1.00	1.00	1.00	1.00
Initial Bse:	388	1877	23	60	641	15	15	27	194	32	62	167
Added Vol:	0	0	0	0	0	0	0	0	0	0	0	0
PasserByVol:	0	0	0	0	0	0	0	0	0	0	0	0
Initial Fut:	388	1877	23	60	641	15	15	27	194	32	62	167
User Adj:	1.00	1.00	1.00	1.00	1.00	1.00	1.00	1.00	1.00	1.00	1.00	1.00
PHF Adj:	1.00	1.00	1.00	1.00	1.00	1.00	1.00	1.00	1.00	1.00	1.00	1.00
PHF Volume:	388	1877	23	60	641	15	15	27	194	32	62	167
Reduct Vol:	0	0	0	0	0	0	0	0	0	0	0	0
Reduced Vol:	388	1877	23	60	641	15	15	27	194	32	62	167
PCE Adj:	1.00	1.00	1.00	1.00	1.00	1.00	1.00	1.00	1.00	1.00	1.00	1.00
MLF Adj:	1.00	1.00	1.00	1.00	1.00	1.00	1.00	1.00	1.00	1.00	1.00	1.00
FinalVolume:	388	1877	23	60	641	15	15	27	194	32	62	167
Saturation Flow Module:												
Sat/Lane:	1900	1900	1900	1900	1900	1900	1900	1900	1900	1900	1900	1900
Adjustment:	0.95	0.95	0.95	0.95	0.95	0.95	0.85	0.85	0.85	0.81	0.81	0.81
Lanes:	1.00	1.98	0.02	1.00	1.95	0.05	0.06	0.11	0.83	0.12	0.24	0.64
Final Sat.:	1805	3559	44	1805	3517	82	103	185	1332	188	363	979
Capacity Analysis Module:												
Vol/Sat:	0.21	0.53	0.53	0.03	0.18	0.18	0.15	0.15	0.15	0.17	0.17	0.17
Crit Moves:		****		****							****	
Green/Cycle:	0.37	0.61	0.61	0.07	0.31	0.31	0.20	0.20	0.20	0.20	0.20	0.20
Volume/Cap:	0.58	0.86	0.86	0.47	0.58	0.58	0.74	0.74	0.74	0.86	0.86	0.86
Delay/Veh:	26.7	19.7	19.7	47.5	29.6	29.6	46.3	46.3	46.3	60.2	60.2	60.2
User DelAdj:	1.00	1.00	1.00	1.00	1.00	1.00	1.00	1.00	1.00	1.00	1.00	1.00
AdjDel/Veh:	26.7	19.7	19.7	47.5	29.6	29.6	46.3	46.3	46.3	60.2	60.2	60.2
LOS by Move:	C	B	B	D	C	C	D	D	D	E	E	E
HCM2kAvgQ:	10	28	28	2	9	9	8	8	8	11	11	11

Note: Queue reported is the number of cars per lane.

Traffix 7.9.0415 (c) 2007 Dowling Assoc. Licensed to MMA, LONG BEACH, CA

Overlook Parkway Extension
Future Alt 2 (Gates Opened - No Overlook)
AM Peak Hour

Level Of Service Computation Report
2000 HCM Operations Method (Future Volume Alternative)

Intersection #21 Alessandro Blvd/Via Vista Dr

Cycle (sec): 100 | Critical Vol./Cap.(X): 0.909
Loss Time (sec): 16 (Y+R=4.0 sec) | Average Delay (sec/veh): 29.7
Optimal Cycle: 120 | Level Of Service: C

Street Name:	Alessandro Blvd						Via Vista Dr					
Approach:	North Bound			South Bound			East Bound			West Bound		
Movement:	L - T - R			L - T - R			L - T - R			L - T - R		
Control:	Protected			Protected			Protected			Protected		
Rights:	Include			Include			Include			Include		
Min. Green:	7	7	7	7	7	7	7	7	7	7	7	7
Lanes:	1 0	2 1	0	1 0	2 1	0	1 0	1 0	1	1 0	1 0	1
Volume Module:												
Base Vol:	58	2969	11	37	1625	67	175	60	66	24	41	115
Growth Adj:	1.00	1.00	1.00	1.00	1.00	1.00	1.00	1.00	1.00	1.00	1.00	1.00
Initial Bse:	58	2969	11	37	1625	67	175	60	66	24	41	115
Added Vol:	0	0	0	0	0	0	0	0	0	0	0	0
PasserByVol:	0	0	0	0	0	0	0	0	0	0	0	0
Initial Fut:	58	2969	11	37	1625	67	175	60	66	24	41	115
User Adj:	1.00	1.00	1.00	1.00	1.00	1.00	1.00	1.00	1.00	1.00	1.00	1.00
PHF Adj:	1.00	1.00	1.00	1.00	1.00	1.00	1.00	1.00	1.00	1.00	1.00	1.00
PHF Volume:	58	2969	11	37	1625	67	175	60	66	24	41	115
Reduct Vol:	0	0	0	0	0	0	0	0	0	0	0	0
Reduced Vol:	58	2969	11	37	1625	67	175	60	66	24	41	115
PCE Adj:	1.00	1.00	1.00	1.00	1.00	1.00	1.00	1.00	1.00	1.00	1.00	1.00
MLF Adj:	1.00	1.00	1.00	1.00	1.00	1.00	1.00	1.00	1.00	1.00	1.00	1.00
FinalVolume:	58	2969	11	37	1625	67	175	60	66	24	41	115
Saturation Flow Module:												
Sat/Lane:	1900	1900	1900	1900	1900	1900	1900	1900	1900	1900	1900	1900
Adjustment:	0.95	0.91	0.91	0.95	0.90	0.90	0.95	1.00	0.85	0.95	1.00	0.85
Lanes:	1.00	2.99	0.01	1.00	2.88	0.12	1.00	1.00	1.00	1.00	1.00	1.00
Final Sat.:	1805	5163	19	1805	4952	204	1805	1900	1615	1805	1900	1615
Capacity Analysis Module:												
Vol/Sat:	0.03	0.58	0.58	0.02	0.33	0.33	0.10	0.03	0.04	0.01	0.02	0.07
Crit Moves:		****			****		****					****
Green/Cycle:	0.12	0.60	0.60	0.07	0.55	0.55	0.10	0.09	0.09	0.09	0.07	0.07
Volume/Cap:	0.27	0.97	0.97	0.29	0.60	0.60	0.97	0.36	0.47	0.15	0.29	0.97
Delay/Veh:	41.0	28.7	28.7	45.4	15.5	15.5	101.3	44.4	45.9	42.7	45.0	117.5
User DelAdj:	1.00	1.00	1.00	1.00	1.00	1.00	1.00	1.00	1.00	1.00	1.00	1.00
AdjDel/Veh:	41.0	28.7	28.7	45.4	15.5	15.5	101.3	44.4	45.9	42.7	45.0	117.5
LOS by Move:	D	C	C	D	B	B	F	D	D	D	D	F
HCM2kAvgQ:	2	38	38	1	13	13	9	2	3	1	1	7

Note: Queue reported is the number of cars per lane.

Traffix 7.9.0415 (c) 2007 Dowling Assoc. Licensed to MMA, LONG BEACH, CA

Overlook Parkway Extension
Future Alt 2 (Gates Opened - No Overlook)
AM Peak Hour

Level Of Service Computation Report
2000 HCM 4-Way Stop Method (Future Volume Alternative)

Intersection #23 Mary St/Hawarden Dr

Cycle (sec): 100 | Critical Vol./Cap.(X): 0.299
Loss Time (sec): 0 (Y+R=4.0 sec) | Average Delay (sec/veh): 8.8
Optimal Cycle: 0 | Level Of Service: A

Street Name:	Mary St						Hawarden Dr					
Approach:	North Bound			South Bound			East Bound			West Bound		
Movement:	L - T - R			L - T - R			L - T - R			L - T - R		
Control:	Stop Sign			Stop Sign			Stop Sign			Stop Sign		
Rights:	Include			Include			Include			Include		
Min. Green:	7	7	7	7	7	7	7	7	7	7	7	7
Lanes:	0 1	0 0	0	0 0	0 1	0	0 0	1! 0	0	0 0	0 0	0
Volume Module:												
Base Vol:	4	237	0	0	42	33	151	0	1	0	0	0
Growth Adj:	1.00	1.00	1.00	1.00	1.00	1.00	1.00	1.00	1.00	1.00	1.00	1.00
Initial Bse:	4	237	0	0	42	33	151	0	1	0	0	0
Added Vol:	0	0	0	0	0	0	0	0	0	0	0	0
PasserByVol:	0	0	0	0	0	0	0	0	0	0	0	0
Initial Fut:	4	237	0	0	42	33	151	0	1	0	0	0
User Adj:	1.00	1.00	1.00	1.00	1.00	1.00	1.00	1.00	1.00	1.00	1.00	1.00
PHF Adj:	1.00	1.00	1.00	1.00	1.00	1.00	1.00	1.00	1.00	1.00	1.00	1.00
PHF Volume:	4	237	0	0	42	33	151	0	1	0	0	0
Reduct Vol:	0	0	0	0	0	0	0	0	0	0	0	0
Reduced Vol:	4	237	0	0	42	33	151	0	1	0	0	0
PCE Adj:	1.00	1.00	1.00	1.00	1.00	1.00	1.00	1.00	1.00	1.00	1.00	1.00
MLF Adj:	1.00	1.00	1.00	1.00	1.00	1.00	1.00	1.00	1.00	1.00	1.00	1.00
FinalVolume:	4	237	0	0	42	33	151	0	1	0	0	0
Saturation Flow Module:												
Adjustment:	1.00	1.00	1.00	1.00	1.00	1.00	1.00	1.00	1.00	1.00	1.00	1.00
Lanes:	0.02	0.98	0.00	0.00	0.56	0.44	0.99	0.00	0.01	0.00	0.00	0.00
Final Sat.:	13	793	0	0	455	358	716	0	5	0	0	0
Capacity Analysis Module:												
Vol/Sat:	0.30	0.30	xxxx	xxxx	0.09	0.09	0.21	xxxx	0.21	xxxx	xxxx	xxxx
Crit Moves:		****				****			****			
Delay/Veh:	9.1	9.1	0.0	0.0	7.7	7.7	9.0	0.0	9.0	0.0	0.0	0.0
Delay Adj:	1.00	1.00	1.00	1.00	1.00	1.00	1.00	1.00	1.00	1.00	1.00	1.00
AdjDel/Veh:	9.1	9.1	0.0	0.0	7.7	7.7	9.0	0.0	9.0	0.0	0.0	0.0
LOS by Move:	A	A	*	*	A	A	A	*	A	*	*	*
ApproachDel:	9.1			7.7			9.0			xxxxxx		
Delay Adj:	1.00			1.00			1.00			xxxxx		
ApprAdjDel:	9.1			7.7			9.0			xxxxxx		
LOS by Appr:	A			A			A			*		
AllWayAvgQ:	0.4	0.4	0.4	0.1	0.1	0.1	0.2	0.2	0.2	0.0	0.0	0.0

Traffix 7.9.0415 (c) 2007 Dowling Assoc. Licensed to MMA, LONG BEACH, CA

Overlook Parkway Extension
Future Alt 2 (Gates Opened - No Overlook)
AM Peak Hour

Note: Queue reported is the number of cars per lane.

Overlook Parkway Extension
Future Alt 2 (Gates Opened - No Overlook)
AM Peak Hour

Level Of Service Computation Report
2000 HCM 4-Way Stop Method (Future Volume Alternative)

Intersection #24 Hawarden Dr/Overlook Pkwy

Cycle (sec):	100	Critical Vol./Cap.(X):	0.210
Loss Time (sec):	0 (Y+R=4.0 sec)	Average Delay (sec/veh):	8.8
Optimal Cycle:	0	Level Of Service:	A

Street Name:	Hawarden Dr						Overlook Pkwy					
Approach:	North Bound			South Bound			East Bound			West Bound		
Movement:	L	T	R	L	T	R	L	T	R	L	T	R
Control:	Stop Sign			Stop Sign			Stop Sign			Stop Sign		
Rights:	Include			Include			Include			Include		
Min. Green:	7	7	7	7	7	7	7	7	7	7	7	7
Lanes:	0 0	1! 0	0	0 0	1! 0	0	1 0	1 1	0	1 0	1 1	0
Volume Module:												
Base Vol:	42	79	7	15	12	9	14	140	31	2	254	40
Growth Adj:	1.00	1.00	1.00	1.00	1.00	1.00	1.00	1.00	1.00	1.00	1.00	1.00
Initial Bse:	42	79	7	15	12	9	14	140	31	2	254	40
Added Vol:	0	0	0	0	0	0	0	0	0	0	0	0
PasserByVol:	0	0	0	0	0	0	0	0	0	0	0	0
Initial Fut:	42	79	7	15	12	9	14	140	31	2	254	40
User Adj:	1.00	1.00	1.00	1.00	1.00	1.00	1.00	1.00	1.00	1.00	1.00	1.00
PHF Adj:	1.00	1.00	1.00	1.00	1.00	1.00	1.00	1.00	1.00	1.00	1.00	1.00
PHF Volume:	42	79	7	15	12	9	14	140	31	2	254	40
Reduct Vol:	0	0	0	0	0	0	0	0	0	0	0	0
Reduced Vol:	42	79	7	15	12	9	14	140	31	2	254	40
PCE Adj:	1.00	1.00	1.00	1.00	1.00	1.00	1.00	1.00	1.00	1.00	1.00	1.00
MLF Adj:	1.00	1.00	1.00	1.00	1.00	1.00	1.00	1.00	1.00	1.00	1.00	1.00
FinalVolume:	42	79	7	15	12	9	14	140	31	2	254	40
Saturation Flow Module:												
Adjustment:	1.00	1.00	1.00	1.00	1.00	1.00	1.00	1.00	1.00	1.00	1.00	1.00
Lanes:	0.33	0.62	0.05	0.42	0.33	0.25	1.00	1.64	0.36	1.00	1.73	0.27
Final Sat.:	220	415	37	273	218	164	614	1122	256	629	1212	195
Capacity Analysis Module:												
Vol/Sat:	0.19	0.19	0.19	0.05	0.05	0.05	0.02	0.12	0.12	0.00	0.21	0.21
Crit Moves:	****				****			****			****	
Delay/Veh:	9.2	9.2	9.2	8.4	8.4	8.4	8.5	8.5	8.3	8.3	9.0	8.8
Delay Adj:	1.00	1.00	1.00	1.00	1.00	1.00	1.00	1.00	1.00	1.00	1.00	1.00
AdjDel/Veh:	9.2	9.2	9.2	8.4	8.4	8.4	8.5	8.5	8.3	8.3	9.0	8.8
LOS by Move:	A	A	A	A	A	A	A	A	A	A	A	A
ApproachDel:	9.2			8.4			8.5			9.0		
Delay Adj:	1.00			1.00			1.00			1.00		
ApprAdjDel:	9.2			8.4			8.5			9.0		
LOS by Appr:	A			A			A			A		
AllWayAvgQ:	0.2	0.2	0.2	0.0	0.0	0.0	0.0	0.1	0.1	0.0	0.3	0.2

Overlook Parkway Extension
Future Alt 2 (Gates Opened - No Overlook)
AM Peak Hour

Note: Queue reported is the number of cars per lane.

Overlook Parkway Extension
Future Alt 2 (Gates Opened - No Overlook)
AM Peak Hour

Level Of Service Computation Report
2000 HCM 4-Way Stop Method (Future Volume Alternative)

Intersection #25 Crystal View Ter/Berry Rd

Cycle (sec):	100	Critical Vol./Cap.(X):	0.381
Loss Time (sec):	0 (Y+R=4.0 sec)	Average Delay (sec/veh):	9.0
Optimal Cycle:	0	Level Of Service:	A

Street Name:	Crystal View Ter						Berry Rd					
Approach:	North Bound			South Bound			East Bound			West Bound		
Movement:	L	- T	- R	L	- T	- R	L	- T	- R	L	- T	- R
Control:	Stop Sign			Stop Sign			Stop Sign			Stop Sign		
Rights:	Include			Include			Include			Include		
Min. Green:	7	7	7	7	7	7	7	7	7	7	7	7
Lanes:	0 0	1! 0	0	0	1 0	0 0	0 0	0 1	0	0 0	1! 0	0
Volume Module:												
Base Vol:	4	187	143	125	45	0	0	3	5	16	2	63
Growth Adj:	1.00	1.00	1.00	1.00	1.00	1.00	1.00	1.00	1.00	1.00	1.00	1.00
Initial Bse:	4	187	143	125	45	0	0	3	5	16	2	63
Added Vol:	0	0	0	0	0	0	0	0	0	0	0	0
PasserByVol:	0	0	0	0	0	0	0	0	0	0	0	0
Initial Fut:	4	187	143	125	45	0	0	3	5	16	2	63
User Adj:	1.00	1.00	1.00	1.00	1.00	1.00	1.00	1.00	1.00	1.00	1.00	1.00
PHF Adj:	1.00	1.00	1.00	1.00	1.00	1.00	1.00	1.00	1.00	1.00	1.00	1.00
PHF Volume:	4	187	143	125	45	0	0	3	5	16	2	63
Reduct Vol:	0	0	0	0	0	0	0	0	0	0	0	0
Reduced Vol:	4	187	143	125	45	0	0	3	5	16	2	63
PCE Adj:	1.00	1.00	1.00	1.00	1.00	1.00	1.00	1.00	1.00	1.00	1.00	1.00
MLF Adj:	1.00	1.00	1.00	1.00	1.00	1.00	1.00	1.00	1.00	1.00	1.00	1.00
FinalVolume:	4	187	143	125	45	0	0	3	5	16	2	63
Saturation Flow Module:												
Adjustment:	1.00	1.00	1.00	1.00	1.00	1.00	1.00	1.00	1.00	1.00	1.00	1.00
Lanes:	0.01	0.56	0.43	0.74	0.26	0.00	0.00	0.37	0.63	0.20	0.02	0.78
Final Sat.:	11	491	375	565	203	0	0	260	434	144	18	567
Capacity Analysis Module:												
Vol/Sat:	0.38	0.38	0.38	0.22	0.22	xxxx	xxxx	0.01	0.01	0.11	0.11	0.11
Crit Moves:			****		****				****		****	
Delay/Veh:	9.4	9.4	9.4	8.8	8.8	0.0	0.0	7.7	7.7	8.0	8.0	8.0
Delay Adj:	1.00	1.00	1.00	1.00	1.00	1.00	1.00	1.00	1.00	1.00	1.00	1.00
AdjDel/Veh:	9.4	9.4	9.4	8.8	8.8	0.0	0.0	7.7	7.7	8.0	8.0	8.0
LOS by Move:	A	A	A	A	A	*	*	A	A	A	A	A
ApproachDel:	9.4			8.8			7.7			8.0		
Delay Adj:	1.00			1.00			1.00			1.00		
ApprAdjDel:	9.4			8.8			7.7			8.0		
LOS by Appr:	A			A			A			A		
AllWayAvgQ:	0.6	0.6	0.6	0.3	0.3	0.3	0.0	0.0	0.0	0.1	0.1	0.1

Overlook Parkway Extension
Future Alt 2 (Gates Opened - No Overlook)
AM Peak Hour

Note: Queue reported is the number of cars per lane.

Overlook Parkway Extension
Future Alt 2 (Gates Opened - No Overlook)
AM Peak Hour

Level Of Service Computation Report
2000 HCM 4-Way Stop Method (Future Volume Alternative)

Intersection #26 Corinthian Wy/Berry Rd

Cycle (sec):	100	Critical Vol./Cap.(X):	0.313
Loss Time (sec):	0 (Y+R=4.0 sec)	Average Delay (sec/veh):	8.6
Optimal Cycle:	0	Level Of Service:	A

Street Name:	Corinthian Wy						Berry Rd					
Approach:	North Bound			South Bound			East Bound			West Bound		
Movement:	L	T	R	L	T	R	L	T	R	L	T	R
Control:	Stop Sign			Stop Sign			Stop Sign			Stop Sign		
Rights:	Include			Include			Include			Include		
Min. Green:	7	7	7	7	7	7	7	7	7	7	7	7
Lanes:	0 0 0 0 0			0 0 1! 0 0			0 1 0 0 0			0 0 0 1 0		
Volume Module:												
Base Vol:	0	0	0	11	0	34	165	102	0	0	44	24
Growth Adj:	1.00	1.00	1.00	1.00	1.00	1.00	1.00	1.00	1.00	1.00	1.00	1.00
Initial Bse:	0	0	0	11	0	34	165	102	0	0	44	24
Added Vol:	0	0	0	0	0	0	0	0	0	0	0	0
PasserByVol:	0	0	0	0	0	0	0	0	0	0	0	0
Initial Fut:	0	0	0	11	0	34	165	102	0	0	44	24
User Adj:	1.00	1.00	1.00	1.00	1.00	1.00	1.00	1.00	1.00	1.00	1.00	1.00
PHF Adj:	1.00	1.00	1.00	1.00	1.00	1.00	1.00	1.00	1.00	1.00	1.00	1.00
PHF Volume:	0	0	0	11	0	34	165	102	0	0	44	24
Reduct Vol:	0	0	0	0	0	0	0	0	0	0	0	0
Reduced Vol:	0	0	0	11	0	34	165	102	0	0	44	24
PCE Adj:	1.00	1.00	1.00	1.00	1.00	1.00	1.00	1.00	1.00	1.00	1.00	1.00
MLF Adj:	1.00	1.00	1.00	1.00	1.00	1.00	1.00	1.00	1.00	1.00	1.00	1.00
FinalVolume:	0	0	0	11	0	34	165	102	0	0	44	24
Saturation Flow Module:												
Adjustment:	1.00	1.00	1.00	1.00	1.00	1.00	1.00	1.00	1.00	1.00	1.00	1.00
Lanes:	0.00	0.00	0.00	0.24	0.00	0.76	0.62	0.38	0.00	0.00	0.65	0.35
Final Sat.:	0	0	0	197	0	609	528	326	0	0	566	309
Capacity Analysis Module:												
Vol/Sat:	xxxx	xxxx	xxxx	0.06	xxxx	0.06	0.31	0.31	xxxx	xxxx	0.08	0.08
Crit Moves:						****	****				****	
Delay/Veh:	0.0	0.0	0.0	7.4	0.0	7.4	9.1	9.1	0.0	0.0	7.4	7.4
Delay Adj:	1.00	1.00	1.00	1.00	1.00	1.00	1.00	1.00	1.00	1.00	1.00	1.00
AdjDel/Veh:	0.0	0.0	0.0	7.4	0.0	7.4	9.1	9.1	0.0	0.0	7.4	7.4
LOS by Move:	*	*	*	A	*	A	A	A	*	*	A	A
ApproachDel:	xxxxxx			7.4			9.1			7.4		
Delay Adj:	xxxxx			1.00			1.00			1.00		
ApprAdjDel:	xxxxxx			7.4			9.1			7.4		
LOS by Appr:	*			A			A			A		
AllWayAvgQ:	0.0	0.0	0.0	0.1	0.1	0.1	0.4	0.4	0.4	0.1	0.1	0.1

Overlook Parkway Extension
Future Alt 2 (Gates Opened - No Overlook)
AM Peak Hour

Note: Queue reported is the number of cars per lane.

Overlook Parkway Extension
Future Alt 2 (Gates Opened - No Overlook)
AM Peak Hour

Level Of Service Computation Report
2000 HCM Unsignalized Method (Future Volume Alternative)

Intersection #28 Orozco Dr/Overlook Pkwy

Average Delay (sec/veh): 1.1 Worst Case Level Of Service: B[12.4]

Street Name:	Orozco Dr						Overlook Pkwy					
Approach:	North Bound			South Bound			East Bound			West Bound		
Movement:	L - T - R			L - T - R			L - T - R			L - T - R		
Control:	Stop Sign			Stop Sign			Uncontrolled			Uncontrolled		
Rights:	Include			Include			Include			Include		
Lanes:	0 0 1! 0 0			0 0 1! 0 0			1 0 1 1 0			1 0 1 1 0		
Volume Module:												
Base Vol:	5	7	2	21	2	1	18	138	2	2	246	134
Growth Adj:	1.00	1.00	1.00	1.00	1.00	1.00	1.00	1.00	1.00	1.00	1.00	1.00
Initial Bse:	5	7	2	21	2	1	18	138	2	2	246	134
Added Vol:	0	0	0	0	0	0	0	0	0	0	0	0
PasserByVol:	0	0	0	0	0	0	0	0	0	0	0	0
Initial Fut:	5	7	2	21	2	1	18	138	2	2	246	134
User Adj:	1.00	1.00	1.00	1.00	1.00	1.00	1.00	1.00	1.00	1.00	1.00	1.00
PHF Adj:	1.00	1.00	1.00	1.00	1.00	1.00	1.00	1.00	1.00	1.00	1.00	1.00
PHF Volume:	5	7	2	21	2	1	18	138	2	2	246	134
Reduct Vol:	0	0	0	0	0	0	0	0	0	0	0	0
FinalVolume:	5	7	2	21	2	1	18	138	2	2	246	134
Critical Gap Module:												
Critical Gp:	7.5	6.5	6.9	7.5	6.5	6.9	4.1	xxxx	xxxxx	4.1	xxxx	xxxxx
FollowUpTim:	3.5	4.0	3.3	3.5	4.0	3.3	2.2	xxxx	xxxxx	2.2	xxxx	xxxxx
Capacity Module:												
Cnflict Vol:	303	559	70	426	493	190	380	xxxx	xxxxx	140	xxxx	xxxxx
Potent Cap.:	632	440	985	518	480	826	1190	xxxx	xxxxx	1456	xxxx	xxxxx
Move Cap.:	621	433	985	504	472	826	1190	xxxx	xxxxx	1456	xxxx	xxxxx
Volume/Cap:	0.01	0.02	0.00	0.04	0.00	0.00	0.02	xxxx	xxxx	0.00	xxxx	xxxx
Level Of Service Module:												
2Way95thQ:	xxxx	xxxx	xxxxx	xxxx	xxxx	xxxxx	0.0	xxxx	xxxxx	0.0	xxxx	xxxxx
Control Del:	xxxxx	xxxx	xxxxx	xxxxx	xxxx	xxxxx	8.1	xxxx	xxxxx	7.5	xxxx	xxxxx
LOS by Move:	*	*	*	*	*	*	A	*	*	A	*	*
Movement:	LT -	LTR -	RT	LT -	LTR -	RT	LT -	LTR -	RT	LT -	LTR -	RT
Shared Cap.:	xxxx	533	xxxxx	xxxx	509	xxxxx	xxxx	xxxx	xxxxx	xxxx	xxxx	xxxxx
SharedQueue:	xxxxx	0.1	xxxxx	xxxxx	0.1	xxxxx	xxxxx	xxxx	xxxxx	xxxxx	xxxx	xxxxx
Shrd ConDel:	xxxxx	11.9	xxxxx	xxxxx	12.4	xxxxx	xxxxx	xxxx	xxxxx	xxxxx	xxxx	xxxxx
Shared LOS:	*	B	*	*	B	*	*	*	*	*	*	*
ApproachDel:	11.9			12.4			xxxxxx			xxxxxx		
ApproachLOS:	B			B			*			*		

Note: Queue reported is the number of cars per lane.

Overlook Parkway Extension
Future Alt 2 (Gates Opened - No Overlook)
AM Peak Hour

Level Of Service Computation Report
2000 HCM 4-Way Stop Method (Future Volume Alternative)

Intersection #51 Madison St/Victoria Ave (North)

Cycle (sec):	100	Critical Vol./Cap.(X):	0.586
Loss Time (sec):	0 (Y+R=4.0 sec)	Average Delay (sec/veh):	13.0
Optimal Cycle:	0	Level Of Service:	B

Street Name:	Madison St							Victoria Ave (North)					
Approach:	North Bound			South Bound			East Bound			West Bound			
Movement:	L	- T	- R	L	- T	- R	L	- T	- R	L	- T	- R	
Control:	Stop Sign			Stop Sign			Stop Sign			Stop Sign			
Rights:	Include			Include			Include			Include			
Min. Green:	7	7	7	7	7	7	7	7	7	7	7	7	
Lanes:	0 1	0 0	0	0 0	1 0	1	0 0	0 0	0	0 1	0 0	1	
Volume Module:													
Base Vol:	8	190	0	0	220	20	0	0	0	4	220	408	
Growth Adj:	1.00	1.00	1.00	1.00	1.00	1.00	1.00	1.00	1.00	1.00	1.00	1.00	
Initial Bse:	8	190	0	0	220	20	0	0	0	4	220	408	
Added Vol:	0	0	0	0	0	0	0	0	0	0	0	0	
PasserByVol:	0	0	0	0	0	0	0	0	0	0	0	0	
Initial Fut:	8	190	0	0	220	20	0	0	0	4	220	408	
User Adj:	1.00	1.00	1.00	1.00	1.00	1.00	1.00	1.00	1.00	1.00	1.00	1.00	
PHF Adj:	1.00	1.00	1.00	1.00	1.00	1.00	1.00	1.00	1.00	1.00	1.00	1.00	
PHF Volume:	8	190	0	0	220	20	0	0	0	4	220	408	
Reduct Vol:	0	0	0	0	0	0	0	0	0	0	0	0	
Reduced Vol:	8	190	0	0	220	20	0	0	0	4	220	408	
PCE Adj:	1.00	1.00	1.00	1.00	1.00	1.00	1.00	1.00	1.00	1.00	1.00	1.00	
MLF Adj:	1.00	1.00	1.00	1.00	1.00	1.00	1.00	1.00	1.00	1.00	1.00	1.00	
FinalVolume:	8	190	0	0	220	20	0	0	0	4	220	408	
Saturation Flow Module:													
Adjustment:	1.00	1.00	1.00	1.00	1.00	1.00	1.00	1.00	1.00	1.00	1.00	1.00	
Lanes:	0.04	0.96	0.00	0.00	1.00	1.00	0.00	0.00	0.00	0.02	0.98	1.00	
Final Sat.:	22	532	0	0	550	610	0	0	0	11	601	697	
Capacity Analysis Module:													
Vol/Sat:	0.36	0.36	xxxx	xxxx	0.40	0.03	xxxx	xxxx	xxxx	0.37	0.37	0.59	
Crit Moves:		****			****							****	
Delay/Veh:	12.5	12.5	0.0	0.0	12.8	8.5	0.0	0.0	0.0	11.6	11.6	14.3	
Delay Adj:	1.00	1.00	1.00	1.00	1.00	1.00	1.00	1.00	1.00	1.00	1.00	1.00	
AdjDel/Veh:	12.5	12.5	0.0	0.0	12.8	8.5	0.0	0.0	0.0	11.6	11.6	14.3	
LOS by Move:	B	B	*	*	B	A	*	*	*	B	B	B	
ApproachDel:	12.5			12.5			xxxxxx			13.3			
Delay Adj:	1.00			1.00			xxxxx			1.00			
ApprAdjDel:	12.5			12.5			xxxxxx			13.3			
LOS by Appr:	B			B			*			B			
AllWayAvgQ:	0.5	0.5	0.5	0.0	0.6	0.0	0.0	0.0	0.0	0.5	0.5	1.3	

Overlook Parkway Extension
Future Alt 2 (Gates Opened - No Overlook)
AM Peak Hour

Note: Queue reported is the number of cars per lane.

Overlook Parkway Extension
Future Alt 2 (Gates Opened - No Overlook)
AM Peak Hour

Level Of Service Computation Report
2000 HCM 4-Way Stop Method (Future Volume Alternative)

Intersection #52 Madison St/Victoria Ave (South)

Cycle (sec):	100	Critical Vol./Cap.(X):	0.417
Loss Time (sec):	0 (Y+R=4.0 sec)	Average Delay (sec/veh):	10.4
Optimal Cycle:	0	Level Of Service:	B

Street Name:	Madison St							Victoria Ave (South)					
Approach:	North Bound			South Bound			East Bound			West Bound			
Movement:	L	T	R	L	T	R	L	T	R	L	T	R	
Control:	Stop Sign			Stop Sign			Stop Sign			Stop Sign			
Rights:	Include			Include			Include			Include			
Min. Green:	7	7	7	7	7	7	7	7	7	7	7	7	
Lanes:	0 0	0	1 0	0 1	0	0 0	0 0	1!	0 0	0 0	0	0 0	
Volume Module:													
Base Vol:	0	151	21	180	44	0	47	247	2	0	0	0	
Growth Adj:	1.00	1.00	1.00	1.00	1.00	1.00	1.00	1.00	1.00	1.00	1.00	1.00	
Initial Bse:	0	151	21	180	44	0	47	247	2	0	0	0	
Added Vol:	0	0	0	0	0	0	0	0	0	0	0	0	
PasserByVol:	0	0	0	0	0	0	0	0	0	0	0	0	
Initial Fut:	0	151	21	180	44	0	47	247	2	0	0	0	
User Adj:	1.00	1.00	1.00	1.00	1.00	1.00	1.00	1.00	1.00	1.00	1.00	1.00	
PHF Adj:	1.00	1.00	1.00	1.00	1.00	1.00	1.00	1.00	1.00	1.00	1.00	1.00	
PHF Volume:	0	151	21	180	44	0	47	247	2	0	0	0	
Reduct Vol:	0	0	0	0	0	0	0	0	0	0	0	0	
Reduced Vol:	0	151	21	180	44	0	47	247	2	0	0	0	
PCE Adj:	1.00	1.00	1.00	1.00	1.00	1.00	1.00	1.00	1.00	1.00	1.00	1.00	
MLF Adj:	1.00	1.00	1.00	1.00	1.00	1.00	1.00	1.00	1.00	1.00	1.00	1.00	
FinalVolume:	0	151	21	180	44	0	47	247	2	0	0	0	
Saturation Flow Module:													
Adjustment:	1.00	1.00	1.00	1.00	1.00	1.00	1.00	1.00	1.00	1.00	1.00	1.00	
Lanes:	0.00	0.88	0.12	0.80	0.20	0.00	0.16	0.83	0.01	0.00	0.00	0.00	
Final Sat.:	0	618	86	552	135	0	113	593	5	0	0	0	
Capacity Analysis Module:													
Vol/Sat:	xxxx	0.24	0.24	0.33	0.33	xxxx	0.42	0.42	0.42	xxxx	xxxx	xxxx	
Crit Moves:			****		****		****						
Delay/Veh:	0.0	9.3	9.3	10.3	10.3	0.0	11.0	11.0	11.0	0.0	0.0	0.0	
Delay Adj:	1.00	1.00	1.00	1.00	1.00	1.00	1.00	1.00	1.00	1.00	1.00	1.00	
AdjDel/Veh:	0.0	9.3	9.3	10.3	10.3	0.0	11.0	11.0	11.0	0.0	0.0	0.0	
LOS by Move:	*	A	A	B	B	*	B	B	B	*	*	*	
ApproachDel:	9.3			10.3			11.0			xxxxxx			
Delay Adj:	1.00			1.00			1.00			xxxxx			
ApprAdjDel:	9.3			10.3			11.0			xxxxxx			
LOS by Appr:	A			B			B			*			
AllWayAvgQ:	0.3	0.3	0.3	0.4	0.4	0.4	0.6	0.6	0.6	0.0	0.0	0.0	

Overlook Parkway Extension
Future Alt 2 (Gates Opened - No Overlook)
AM Peak Hour

Note: Queue reported is the number of cars per lane.

Overlook Parkway Extension
Future Alt 2 (Gates Opened - No Overlook)
AM Peak Hour

Level Of Service Computation Report
2000 HCM 4-Way Stop Method (Future Volume Alternative)

Intersection #81 Washington St/Victoria Ave (North)

Cycle (sec):	100	Critical Vol./Cap.(X):	1.294
Loss Time (sec):	0 (Y+R=4.0 sec)	Average Delay (sec/veh):	103.6
Optimal Cycle:	0	Level Of Service:	F

Street Name:	Washington St								Victoria Ave (North)								
Approach:	North Bound				South Bound				East Bound				West Bound				
Movement:	L	-	T	-	R	L	-	T	-	R	L	-	T	-	R	L	-	T	-	R
Control:	Stop Sign					Stop Sign					Stop Sign					Stop Sign				
Rights:	Include					Include					Include					Include				
Min. Green:	7	7	7			7	7	7			7	7	7			7	7	7		
Lanes:	0	1	1	0	0	0	0	0	1	0	0	0	0	0	0	1	0	0	1	0
Volume Module:																				
Base Vol:	467	861		0		0	337		9		0		0		0	299	156		15	
Growth Adj:	1.00	1.00	1.00			1.00	1.00	1.00			1.00	1.00	1.00			1.00	1.00	1.00		
Initial Bse:	467	861		0		0	337		9		0		0		0	299	156		15	
Added Vol:	0	0		0		0	0		0		0		0		0	0	0		0	
PasserByVol:	0	0		0		0	0		0		0		0		0	0	0		0	
Initial Fut:	467	861		0		0	337		9		0		0		0	299	156		15	
User Adj:	1.00	1.00	1.00			1.00	1.00	1.00			1.00	1.00	1.00			1.00	1.00	1.00		
PHF Adj:	1.00	1.00	1.00			1.00	1.00	1.00			1.00	1.00	1.00			1.00	1.00	1.00		
PHF Volume:	467	861		0		0	337		9		0		0		0	299	156		15	
Reduct Vol:	0	0		0		0	0		0		0		0		0	0	0		0	
Reduced Vol:	467	861		0		0	337		9		0		0		0	299	156		15	
PCE Adj:	1.00	1.00	1.00			1.00	1.00	1.00			1.00	1.00	1.00			1.00	1.00	1.00		
MLF Adj:	1.00	1.00	1.00			1.00	1.00	1.00			1.00	1.00	1.00			1.00	1.00	1.00		
FinalVolume:	467	861		0		0	337		9		0		0		0	299	156		15	
Saturation Flow Module:																				
Adjustment:	1.00	1.00	1.00			1.00	1.00	1.00			1.00	1.00	1.00			1.00	1.00	1.00		
Lanes:	0.70	1.30	0.00			0.00	0.97	0.03			0.00	0.00	0.00			1.00	0.91	0.09		
Final Sat.:	361	693		0		0	503		13		0		0		0	455	447		43	
Capacity Analysis Module:																				
Vol/Sat:	1.29	1.24	xxxx		xxxx	0.67	0.67	xxxx		xxxx	xxxx				0.66	0.35		0.35		
Crit Moves:	****					****									****					
Delay/Veh:	167.6	147		0.0	0.0	22.8	22.8		0.0	0.0		0.0			24.3	13.9		13.9		
Delay Adj:	1.00	1.00	1.00			1.00	1.00	1.00			1.00	1.00	1.00			1.00	1.00	1.00		
AdjDel/Veh:	167.6	147		0.0	0.0	22.8	22.8		0.0	0.0		0.0			24.3	13.9		13.9		
LOS by Move:	F	F		*	*	C	C		*	*		*			C	B		B		
ApproachDel:	154.0					22.8			xxxxxx						20.5					
Delay Adj:	1.00					1.00			xxxxx						1.00					
ApprAdjDel:	154.0					22.8			xxxxxx						20.5					
LOS by Appr:	F					C			*						C					
AllWayAvgQ:	22.5	19.7		0.0	1.8	1.8	1.8		0.0	0.0		0.0			1.7	0.5		0.5		

Overlook Parkway Extension
Future Alt 2 (Gates Opened - No Overlook)
AM Peak Hour

Note: Queue reported is the number of cars per lane.

Overlook Parkway Extension
Future Alt 2 (Gates Opened - No Overlook)
AM Peak Hour

Level Of Service Computation Report
2000 HCM 4-Way Stop Method (Future Volume Alternative)

Intersection #82 Washington St/Victoria Ave (South)

Cycle (sec):	100	Critical Vol./Cap.(X):	1.234
Loss Time (sec):	0 (Y+R=4.0 sec)	Average Delay (sec/veh):	116.3
Optimal Cycle:	0	Level Of Service:	F

Street Name:	Washington St							Victoria Ave (South)					
Approach:	North Bound			South Bound			East Bound			West Bound			
Movement:	L -	T -	R	L -	T -	R	L -	T -	R	L -	T -	R	
Control:	Stop Sign			Stop Sign			Stop Sign			Stop Sign			
Rights:	Include			Include			Include			Include			
Min. Green:	7	7	7	7	7	7	7	7	7	7	7	7	
Lanes:	0 0	2 0	1	0 1	0 0	0	0 1	0 0	1	0 0	0 0	0	
Volume Module:													
Base Vol:	0	1319	685	10	626	0	9	156	220	0	0	0	
Growth Adj:	1.00	1.00	1.00	1.00	1.00	1.00	1.00	1.00	1.00	1.00	1.00	1.00	
Initial Bse:	0	1319	685	10	626	0	9	156	220	0	0	0	
Added Vol:	0	0	0	0	0	0	0	0	0	0	0	0	
PasserByVol:	0	0	0	0	0	0	0	0	0	0	0	0	
Initial Fut:	0	1319	685	10	626	0	9	156	220	0	0	0	
User Adj:	1.00	1.00	1.00	1.00	1.00	1.00	1.00	1.00	1.00	1.00	1.00	1.00	
PHF Adj:	1.00	1.00	1.00	1.00	1.00	1.00	1.00	1.00	1.00	1.00	1.00	1.00	
PHF Volume:	0	1319	685	10	626	0	9	156	220	0	0	0	
Reduct Vol:	0	0	0	0	0	0	0	0	0	0	0	0	
Reduced Vol:	0	1319	685	10	626	0	9	156	220	0	0	0	
PCE Adj:	1.00	1.00	1.00	1.00	1.00	1.00	1.00	1.00	1.00	1.00	1.00	1.00	
MLF Adj:	1.00	1.00	1.00	1.00	1.00	1.00	1.00	1.00	1.00	1.00	1.00	1.00	
FinalVolume:	0	1319	685	10	626	0	9	156	220	0	0	0	
Saturation Flow Module:													
Adjustment:	1.00	1.00	1.00	1.00	1.00	1.00	1.00	1.00	1.00	1.00	1.00	1.00	
Lanes:	0.00	2.00	1.00	0.02	0.98	0.00	0.05	0.95	1.00	0.00	0.00	0.00	
Final Sat.:	0	1069	596	8	521	0	22	389	448	0	0	0	
Capacity Analysis Module:													
Vol/Sat:	xxxx	1.23	1.15	1.20	1.20	xxxx	0.40	0.40	0.49	xxxx	xxxx	xxxx	
Crit Moves:		****			****				****				
Delay/Veh:	0.0	143	107.3	130.5	130	0.0	17.2	17.2	18.3	0.0	0.0	0.0	
Delay Adj:	1.00	1.00	1.00	1.00	1.00	1.00	1.00	1.00	1.00	1.00	1.00	1.00	
AdjDel/Veh:	0.0	143	107.3	130.5	130	0.0	17.2	17.2	18.3	0.0	0.0	0.0	
LOS by Move:	*	F	F	F	F	*	C	C	C	*	*	*	
ApproachDel:	130.7			130.5			17.8			xxxxxx			
Delay Adj:	1.00			1.00			1.00			xxxxx			
ApprAdjDel:	130.7			130.5			17.8			xxxxxx			
LOS by Appr:	F			F			C			*			
AllWayAvgQ:	0.0	19.8	16.3	17.8	17.8	17.8	0.7	0.7	0.9	0.0	0.0	0.0	

Overlook Parkway Extension
Future Alt 2 (Gates Opened - No Overlook)
AM Peak Hour

Note: Queue reported is the number of cars per lane.

Overlook Parkway Extension
Future Alt 2 (Gates Opened - No Overlook)
AM Peak Hour

Level Of Service Computation Report
2000 HCM 4-Way Stop Method (Future Volume Alternative)

Intersection #221 Mary St/Victoria Ave (North)

Cycle (sec):	100	Critical Vol./Cap.(X):	1.347
Loss Time (sec):	0 (Y+R=4.0 sec)	Average Delay (sec/veh):	110.7
Optimal Cycle:	0	Level Of Service:	F

Street Name:	Mary St								Victoria Ave (North)								
Approach:	North Bound				South Bound				East Bound				West Bound				
Movement:	L	-	T	-	R	L	-	T	-	R	L	-	T	-	R	L	-	T	-	R	L	-	T	-	R
Control:	Stop Sign					Stop Sign					Stop Sign					Stop Sign				
Rights:	Include					Include					Include					Include				
Min. Green:	7	7	7			7	7	7			7	7	7			7	7	7		
Lanes:	0	1	0	0	0	0	0	1	0	1	0	0	0	0	0	0	0	1!	0	0
Volume Module:																				
Base Vol:	30	844	0			0	166	135			0	0	0			25	161	178		
Growth Adj:	1.00	1.00	1.00			1.00	1.00	1.00			1.00	1.00	1.00			1.00	1.00	1.00		
Initial Bse:	30	844	0			0	166	135			0	0	0			25	161	178		
Added Vol:	0	0	0			0	0	0			0	0	0			0	0	0		
PasserByVol:	0	0	0			0	0	0			0	0	0			0	0	0		
Initial Fut:	30	844	0			0	166	135			0	0	0			25	161	178		
User Adj:	1.00	1.00	1.00			1.00	1.00	1.00			1.00	1.00	1.00			1.00	1.00	1.00		
PHF Adj:	1.00	1.00	1.00			1.00	1.00	1.00			1.00	1.00	1.00			1.00	1.00	1.00		
PHF Volume:	30	844	0			0	166	135			0	0	0			25	161	178		
Reduct Vol:	0	0	0			0	0	0			0	0	0			0	0	0		
Reduced Vol:	30	844	0			0	166	135			0	0	0			25	161	178		
PCE Adj:	1.00	1.00	1.00			1.00	1.00	1.00			1.00	1.00	1.00			1.00	1.00	1.00		
MLF Adj:	1.00	1.00	1.00			1.00	1.00	1.00			1.00	1.00	1.00			1.00	1.00	1.00		
FinalVolume:	30	844	0			0	166	135			0	0	0			25	161	178		
Saturation Flow Module:																				
Adjustment:	1.00	1.00	1.00			1.00	1.00	1.00			1.00	1.00	1.00			1.00	1.00	1.00		
Lanes:	0.03	0.97	0.00			0.00	1.00	1.00			0.00	0.00	0.00			0.07	0.44	0.49		
Final Sat.:	22	627	0			0	545	610			0	0	0			41	267	295		
Capacity Analysis Module:																				
Vol/Sat:	1.35	1.35	xxxx			xxxx	0.30	0.22			xxxx	xxxx	xxxx			0.60	0.60	0.60		
Crit Moves:		****					****										****			
Delay/Veh:	183.9	184	0.0			0.0	11.9	10.0			0.0	0.0	0.0			17.2	17.2	17.2		
Delay Adj:	1.00	1.00	1.00			1.00	1.00	1.00			1.00	1.00	1.00			1.00	1.00	1.00		
AdjDel/Veh:	183.9	184	0.0			0.0	11.9	10.0			0.0	0.0	0.0			17.2	17.2	17.2		
LOS by Move:	F	F	*			*	B	B			*	*	*			C	C	C		
ApproachDel:	183.9						11.0				xxxxxx					17.2				
Delay Adj:	1.00						1.00				xxxxx					1.00				
ApprAdjDel:	183.9						11.0				xxxxxx					17.2				
LOS by Appr:	F						B				*					C				
AllWayAvgQ:	31.6	31.6	31.6			0.0	0.4	0.3			0.0	0.0	0.0			1.4	1.4	1.4		

Overlook Parkway Extension
Future Alt 2 (Gates Opened - No Overlook)
AM Peak Hour

Note: Queue reported is the number of cars per lane.

Overlook Parkway Extension
Future Alt 2 (Gates Opened - No Overlook)
AM Peak Hour

Level Of Service Computation Report
2000 HCM 4-Way Stop Method (Future Volume Alternative)

Intersection #222 Mary St/Victoria Ave (South)

Cycle (sec):	100	Critical Vol./Cap.(X):	1.030
Loss Time (sec):	0 (Y+R=4.0 sec)	Average Delay (sec/veh):	40.9
Optimal Cycle:	0	Level Of Service:	E

Street Name:	Mary St							Victoria Ave (South)					
Approach:	North Bound			South Bound			East Bound			West Bound			
Movement:	L	T	R	L	T	R	L	T	R	L	T	R	
Control:	Stop Sign			Stop Sign			Stop Sign			Stop Sign			
Rights:	Include			Include			Include			Include			
Min. Green:	7	7	7	7	7	7	7	7	7	7	7	7	
Lanes:	0 0	0	1 0	0 1	0	0 0	1 0	0	1 0	0 0	0	0 0	
Volume Module:													
Base Vol:	0	337	165	103	88	0	537	289	11	0	0	0	
Growth Adj:	1.00	1.00	1.00	1.00	1.00	1.00	1.00	1.00	1.00	1.00	1.00	1.00	
Initial Bse:	0	337	165	103	88	0	537	289	11	0	0	0	
Added Vol:	0	0	0	0	0	0	0	0	0	0	0	0	
PasserByVol:	0	0	0	0	0	0	0	0	0	0	0	0	
Initial Fut:	0	337	165	103	88	0	537	289	11	0	0	0	
User Adj:	1.00	1.00	1.00	1.00	1.00	1.00	1.00	1.00	1.00	1.00	1.00	1.00	
PHF Adj:	1.00	1.00	1.00	1.00	1.00	1.00	1.00	1.00	1.00	1.00	1.00	1.00	
PHF Volume:	0	337	165	103	88	0	537	289	11	0	0	0	
Reduct Vol:	0	0	0	0	0	0	0	0	0	0	0	0	
Reduced Vol:	0	337	165	103	88	0	537	289	11	0	0	0	
PCE Adj:	1.00	1.00	1.00	1.00	1.00	1.00	1.00	1.00	1.00	1.00	1.00	1.00	
MLF Adj:	1.00	1.00	1.00	1.00	1.00	1.00	1.00	1.00	1.00	1.00	1.00	1.00	
FinalVolume:	0	337	165	103	88	0	537	289	11	0	0	0	
Saturation Flow Module:													
Adjustment:	1.00	1.00	1.00	1.00	1.00	1.00	1.00	1.00	1.00	1.00	1.00	1.00	
Lanes:	0.00	0.67	0.33	0.54	0.46	0.00	1.00	0.96	0.04	0.00	0.00	0.00	
Final Sat.:	0	405	198	282	241	0	521	543	21	0	0	0	
Capacity Analysis Module:													
Vol/Sat:	xxxx	0.83	0.83	0.36	0.36	xxxx	1.03	0.53	0.53	xxxx	xxxx	xxxx	
Crit Moves:			****	****			****						
Delay/Veh:	0.0	31.3	31.3	13.5	13.5	0.0	73.4	16.1	16.1	0.0	0.0	0.0	
Delay Adj:	1.00	1.00	1.00	1.00	1.00	1.00	1.00	1.00	1.00	1.00	1.00	1.00	
AdjDel/Veh:	0.0	31.3	31.3	13.5	13.5	0.0	73.4	16.1	16.1	0.0	0.0	0.0	
LOS by Move:	*	D	D	B	B	*	F	C	C	*	*	*	
ApproachDel:	31.3			13.5			52.9			xxxxxx			
Delay Adj:	1.00			1.00			1.00			xxxxx			
ApprAdjDel:	31.3			13.5			52.9			xxxxxx			
LOS by Appr:	D			B			F			*			
AllWayAvgQ:	3.8	3.8	3.8	0.5	0.5	0.5	9.2	1.1	1.1	0.0	0.0	0.0	

Overlook Parkway Extension
Future Alt 2 (Gates Opened - No Overlook)
AM Peak Hour

Note: Queue reported is the number of cars per lane.

Overlook Parkway Extension
Future Alt 2 (Gates Opened - No Overlook)
PM Peak Hour

Scenario Report

Scenario:	Future Alt 2 PM
Command:	Future Alt 2 PM
Volume:	Future Alt 2 PM
Geometry:	Future
Impact Fee:	Default Impact Fee
Trip Generation:	none
Trip Distribution:	none
Paths:	Default Path
Routes:	Default Route
Configuration:	Future Alt 2 PM

Traffix 7.9.0415 (c) 2007 Dowling Assoc. Licensed to MMA, LONG BEACH, CA

Overlook Parkway Extension
Future Alt 2 (Gates Opened - No Overlook)
PM Peak Hour

Impact Analysis Report
Level Of Service

Intersection	Base LOS	Base Del/ Veh	Base V/ C	Future LOS	Future Del/ Veh	Future V/ C	Change in
# 1 Madison St/SR-91 WB Ramps	C	32.8	0.805	C	32.8	0.805	+ 0.000 D/V
# 2 Madison St/SR-91 EB Ramps	E	70.2	1.141	E	70.2	1.141	+ 0.000 D/V
# 3 Madison St/Indiana Ave	F	179.7	1.486	F	179.7	1.486	+ 0.000 D/V
# 4 Madison St/Lincoln Ave	C	33.6	0.655	C	33.6	0.655	+ 0.000 D/V
# 6 Washington St/Indiana Ave	C	34.9	0.952	C	34.9	0.952	+ 0.000 D/V
# 7 Washington St/Lincoln Ave	F	177.9	1.576	F	177.9	1.576	+ 0.000 V/C
# 9 Washington St/Overlook Pkwy	C	28.0	0.885	C	28.0	0.885	+ 0.000 D/V
# 10 Riverside Ave-SR-91 WB/Arlingt	E	67.2	1.092	E	67.2	1.092	+ 0.000 D/V
# 11 Indiana Ave-SR-91 EB/Arlington	E	59.6	1.121	E	59.6	1.121	+ 0.000 D/V
# 12 Victoria Ave/Arlington Ave	E	68.6	1.037	E	68.6	1.037	+ 0.000 D/V
# 13 Alessandro Blvd/Arlington Ave	F	117.6	1.231	F	117.6	1.231	+ 0.000 D/V
# 14 Alessandro Blvd/Overlook Pkwy	F	108.3	1.092	F	108.3	1.092	+ 0.000 D/V
# 15 Alessandro Blvd/Trautwein Rd	D	42.4	0.982	D	42.4	0.982	+ 0.000 D/V
# 16 Crystal View Ter/Overlook Pkwy	B	15.0	0.708	B	15.0	0.708	+ 0.000 V/C
# 17 Kingdom Dr/Overlook Pkwy	C	19.7	0.000	C	19.7	0.000	+ 0.000 D/V
# 18 Kingdom Dr/Green Orchard Pl	A	8.5	0.000	A	8.5	0.000	+ 0.000 D/V
# 19 Trautwein Rd/John F. Kennedy D	D	36.5	0.952	D	36.5	0.952	+ 0.000 D/V
# 20 Washington St/Bradley St	D	52.6	1.005	D	52.6	1.005	+ 0.000 D/V
# 21 Alessandro Blvd/Via Vista Dr	D	42.7	0.960	D	42.7	0.960	+ 0.000 D/V
# 23 Mary St/Hawarden Dr	A	9.7	0.463	A	9.7	0.463	+ 0.000 V/C
# 24 Hawarden Dr/Overlook Pkwy	B	11.6	0.490	B	11.6	0.490	+ 0.000 V/C
# 25 Crystal View Ter/Berry Rd	C	20.4	0.838	C	20.4	0.838	+ 0.000 V/C
# 26 Corinthian Wy/Berry Rd	C	19.3	0.812	C	19.3	0.812	+ 0.000 V/C

Traffix 7.9.0415 (c) 2007 Dowling Assoc. Licensed to MMA, LONG BEACH, CA

Overlook Parkway Extension
Future Alt 2 (Gates Opened - No Overlook)
PM Peak Hour

Intersection	Base LOS	Base Del/Veh	Base V/C	Future LOS	Future Del/Veh	Future V/C	Change in
# 28 Orozco Dr/Overlook Pkwy	D	27.1	0.000	D	27.1	0.000	+ 0.000 D/V
# 51 Madison St/Victoria Ave (North	F	152.1	1.491	F	152.1	1.491	+ 0.000 V/C
# 52 Madison St/Victoria Ave (South	F	121.8	1.331	F	121.8	1.331	+ 0.000 V/C
# 81 Washington St/Victoria Ave (No	F	155.3	1.483	F	155.3	1.483	+ 0.000 V/C
# 82 Washington St/Victoria Ave (So	F	386.2	2.789	F	386.2	2.789	+ 0.000 V/C
#221 Mary St/Victoria Ave (North)	F	96.2	1.281	F	96.2	1.281	+ 0.000 V/C
#222 Mary St/Victoria Ave (South)	F	94.1	1.334	F	94.1	1.334	+ 0.000 V/C

Overlook Parkway Extension
Future Alt 2 (Gates Opened - No Overlook)
PM Peak Hour

Level Of Service Computation Report
2000 HCM Operations Method (Future Volume Alternative)

Intersection #1 Madison St/SR-91 WB Ramps

Cycle (sec): 100 Critical Vol./Cap.(X): 0.805
Loss Time (sec): 12 (Y+R=4.0 sec) Average Delay (sec/veh): 32.8
Optimal Cycle: 78 Level Of Service: C

Street Name:	Madison St						SR-91 WB Ramps					
Approach:	North Bound			South Bound			East Bound			West Bound		
Movement:	L	T	R	L	T	R	L	T	R	L	T	R
Control:	Protected			Protected			Split Phase			Split Phase		
Rights:	Include			Include			Include			Include		
Min. Green:	7	7	7	7	7	7	7	7	7	7	7	7
Lanes:	1 0	2 0	0	0 0	3 0	1	0 0	0 0	0	0 1	0 0	1
Volume Module:												
Base Vol:	438	989	0	0	1103	189	0	0	0	428	2	171
Growth Adj:	1.00	1.00	1.00	1.00	1.00	1.00	1.00	1.00	1.00	1.00	1.00	1.00
Initial Bse:	438	989	0	0	1103	189	0	0	0	428	2	171
Added Vol:	0	0	0	0	0	0	0	0	0	0	0	0
PasserByVol:	0	0	0	0	0	0	0	0	0	0	0	0
Initial Fut:	438	989	0	0	1103	189	0	0	0	428	2	171
User Adj:	1.00	1.00	1.00	1.00	1.00	1.00	1.00	1.00	1.00	1.00	1.00	1.00
PHF Adj:	1.00	1.00	1.00	1.00	1.00	1.00	1.00	1.00	1.00	1.00	1.00	1.00
PHF Volume:	438	989	0	0	1103	189	0	0	0	428	2	171
Reduct Vol:	0	0	0	0	0	0	0	0	0	0	0	0
Reduced Vol:	438	989	0	0	1103	189	0	0	0	428	2	171
PCE Adj:	1.00	1.00	1.00	1.00	1.00	1.00	1.00	1.00	1.00	1.00	1.00	1.00
MLF Adj:	1.00	1.00	1.00	1.00	1.00	1.00	1.00	1.00	1.00	1.00	1.00	1.00
FinalVolume:	438	989	0	0	1103	189	0	0	0	428	2	171
Saturation Flow Module:												
Sat/Lane:	1900	1900	1900	1900	1900	1900	1900	1900	1900	1900	1900	1900
Adjustment:	0.95	0.95	1.00	1.00	0.91	0.85	1.00	1.00	1.00	0.89	0.89	0.85
Lanes:	1.00	2.00	0.00	0.00	3.00	1.00	0.00	0.00	0.00	0.99	0.01	1.00
Final Sat.:	1805	3610	0	0	5187	1615	0	0	0	1689	8	1615
Capacity Analysis Module:												
Vol/Sat:	0.24	0.27	0.00	0.00	0.21	0.12	0.00	0.00	0.00	0.25	0.25	0.11
Crit Moves:	****				****					****		
Green/Cycle:	0.30	0.45	0.00	0.00	0.26	0.26	0.00	0.00	0.00	0.31	0.31	0.31
Volume/Cap:	0.81	0.61	0.00	0.00	0.81	0.44	0.00	0.00	0.00	0.81	0.81	0.34
Delay/Veh:	40.8	21.5	0.0	0.0	38.0	31.4	0.0	0.0	0.0	40.2	40.2	26.7
User DelAdj:	1.00	1.00	1.00	1.00	1.00	1.00	1.00	1.00	1.00	1.00	1.00	1.00
AdjDel/Veh:	40.8	21.5	0.0	0.0	38.0	31.4	0.0	0.0	0.0	40.2	40.2	26.7
LOS by Move:	D	C	A	A	D	C	A	A	A	D	D	C
HCM2kAvgQ:	15	12	0	0	14	5	0	0	0	14	14	4

Note: Queue reported is the number of cars per lane.

Overlook Parkway Extension
Future Alt 2 (Gates Opened - No Overlook)
PM Peak Hour

Level Of Service Computation Report
2000 HCM Operations Method (Future Volume Alternative)

Intersection #2 Madison St/SR-91 EB Ramps

Cycle (sec):	100	Critical Vol./Cap.(X):	1.141
Loss Time (sec):	12 (Y+R=4.0 sec)	Average Delay (sec/veh):	70.2
Optimal Cycle:	130	Level Of Service:	E

Street Name:	Madison St								SR-91 EB Ramps					
Approach:	North Bound			South Bound			East Bound			West Bound				
Movement:	L	T	R	L	T	R	L	T	R	L	T	R		
Control:	Protected			Protected			Protected			Protected				
Rights:	Include			Include			Include			Include				
Min. Green:	7	7	7	7	7	7	7	7	7	7	7	7		
Lanes:	0	0	3	0	1	1	0	2	0	0	0	1	0	0	0	0	0	
Volume Module:														
Base Vol:	0	1141	632	207	1356	0	268	6	805	0	0	0		
Growth Adj:	1.00	1.00	1.00	1.00	1.00	1.00	1.00	1.00	1.00	1.00	1.00	1.00		
Initial Bse:	0	1141	632	207	1356	0	268	6	805	0	0	0		
Added Vol:	0	0	0	0	0	0	0	0	0	0	0	0		
PasserByVol:	0	0	0	0	0	0	0	0	0	0	0	0		
Initial Fut:	0	1141	632	207	1356	0	268	6	805	0	0	0		
User Adj:	1.00	1.00	1.00	1.00	1.00	1.00	1.00	1.00	1.00	1.00	1.00	1.00		
PHF Adj:	1.00	1.00	1.00	1.00	1.00	1.00	1.00	1.00	1.00	1.00	1.00	1.00		
PHF Volume:	0	1141	632	207	1356	0	268	6	805	0	0	0		
Reduct Vol:	0	0	0	0	0	0	0	0	0	0	0	0		
Reduced Vol:	0	1141	632	207	1356	0	268	6	805	0	0	0		
PCE Adj:	1.00	1.00	1.00	1.00	1.00	1.00	1.00	1.00	1.00	1.00	1.00	1.00		
MLF Adj:	1.00	1.00	1.00	1.00	1.00	1.00	1.00	1.00	1.00	1.00	1.00	1.00		
FinalVolume:	0	1141	632	207	1356	0	268	6	805	0	0	0		
Saturation Flow Module:														
Sat/Lane:	1900	1900	1900	1900	1900	1900	1900	1900	1900	1900	1900	1900		
Adjustment:	1.00	0.91	0.85	0.95	0.95	1.00	0.96	0.96	0.85	1.00	1.00	1.00		
Lanes:	0.00	3.00	1.00	1.00	2.00	0.00	0.98	0.02	1.00	0.00	0.00	0.00		
Final Sat.:	0	5187	1615	1805	3610	0	1790	40	1615	0	0	0		
Capacity Analysis Module:														
Vol/Sat:	0.00	0.22	0.39	0.11	0.38	0.00	0.15	0.15	0.50	0.00	0.00	0.00		
Crit Moves:			****	****					****					
Green/Cycle:	0.00	0.34	0.34	0.10	0.37	0.00	0.35	0.44	0.44	0.00	0.00	0.00		
Volume/Cap:	0.00	0.64	1.14	1.14	1.01	0.00	0.43	0.34	1.14	0.00	0.00	0.00		
Delay/Veh:	0.0	28.5	116.5	155.0	57.4	0.0	25.7	18.9	108.2	0.0	0.0	0.0		
User DelAdj:	1.00	1.00	1.00	1.00	1.00	1.00	1.00	1.00	1.00	1.00	1.00	1.00		
AdjDel/Veh:	0.0	28.5	116.5	155.0	57.4	0.0	25.7	18.9	108.2	0.0	0.0	0.0		
LOS by Move:	A	C	F	F	E	A	C	B	F	A	A	A		
HCM2kAvgQ:	0	11	33	13	30	0	7	6	40	0	0	0		

Note: Queue reported is the number of cars per lane.

Traffix 7.9.0415 (c) 2007 Dowling Assoc. Licensed to MMA, LONG BEACH, CA

Overlook Parkway Extension
Future Alt 2 (Gates Opened - No Overlook)
PM Peak Hour

Level Of Service Computation Report
2000 HCM Operations Method (Future Volume Alternative)

Intersection #3 Madison St/Indiana Ave

Cycle (sec):	100	Critical Vol./Cap.(X):	1.486
Loss Time (sec):	16 (Y+R=4.0 sec)	Average Delay (sec/veh):	179.7
Optimal Cycle:	130	Level Of Service:	F

Street Name:	Madison St								Indiana Ave					
Approach:	North Bound			South Bound			East Bound			West Bound				
Movement:	L	T	R	L	T	R	L	T	R	L	T	R		
Control:	Protected			Protected			Protected			Protected				
Rights:	Include			Include			Include			Include				
Min. Green:	7	7	7	7	7	7	7	7	7	7	7	7		
Lanes:	1	0	1	1	0	1	0	1	1	0	1	0	1	1	0	1	0	
Volume Module:														
Base Vol:	97	756	50	689	1165	301	401	692	94	55	500	690		
Growth Adj:	1.00	1.00	1.00	1.00	1.00	1.00	1.00	1.00	1.00	1.00	1.00	1.00		
Initial Bse:	97	756	50	689	1165	301	401	692	94	55	500	690		
Added Vol:	0	0	0	0	0	0	0	0	0	0	0	0		
PasserByVol:	0	0	0	0	0	0	0	0	0	0	0	0		
Initial Fut:	97	756	50	689	1165	301	401	692	94	55	500	690		
User Adj:	1.00	1.00	1.00	1.00	1.00	1.00	1.00	1.00	1.00	1.00	1.00	1.00		
PHF Adj:	1.00	1.00	1.00	1.00	1.00	1.00	1.00	1.00	1.00	1.00	1.00	1.00		
PHF Volume:	97	756	50	689	1165	301	401	692	94	55	500	690		
Reduct Vol:	0	0	0	0	0	0	0	0	0	0	0	0		
Reduced Vol:	97	756	50	689	1165	301	401	692	94	55	500	690		
PCE Adj:	1.00	1.00	1.00	1.00	1.00	1.00	1.00	1.00	1.00	1.00	1.00	1.00		
MLF Adj:	1.00	1.00	1.00	1.00	1.00	1.00	1.00	1.00	1.00	1.00	1.00	1.00		
FinalVolume:	97	756	50	689	1165	301	401	692	94	55	500	690		
Saturation Flow Module:														
Sat/Lane:	1900	1900	1900	1900	1900	1900	1900	1900	1900	1900	1900	1900		
Adjustment:	0.95	0.94	0.94	0.95	0.92	0.92	0.95	0.93	0.93	0.95	0.87	0.87		
Lanes:	1.00	1.88	0.12	1.00	1.59	0.41	1.00	1.76	0.24	1.00	1.00	1.00		
Final Sat.:	1805	3356	222	1805	2780	718	1805	3121	424	1805	1648	1648		
Capacity Analysis Module:														
Vol/Sat:	0.05	0.23	0.23	0.38	0.42	0.42	0.22	0.22	0.22	0.03	0.30	0.42		
Crit Moves:		****		****			****					****		
Green/Cycle:	0.07	0.15	0.15	0.26	0.34	0.34	0.15	0.33	0.33	0.10	0.28	0.28		
Volume/Cap:	0.77	1.49	1.49	1.49	1.24	1.24	1.49	0.68	0.68	0.29	1.08	1.49		
Delay/Veh:	70.0	271	270.6	266.9	147	147.4	279.8	30.6	30.6	42.3	86.1	261.1		
User DelAdj:	1.00	1.00	1.00	1.00	1.00	1.00	1.00	1.00	1.00	1.00	1.00	1.00		
AdjDel/Veh:	70.0	271	270.6	266.9	147	147.4	279.8	30.6	30.6	42.3	86.1	261.1		
LOS by Move:	E	F	F	F	F	F	F	C	C	D	F	F		
HCM2kAvgQ:	5	32	32	50	44	44	30	12	12	2	25	53		

Note: Queue reported is the number of cars per lane.

Traffix 7.9.0415 (c) 2007 Dowling Assoc. Licensed to MMA, LONG BEACH, CA

Overlook Parkway Extension
Future Alt 2 (Gates Opened - No Overlook)
PM Peak Hour

Level Of Service Computation Report
2000 HCM Operations Method (Future Volume Alternative)

Intersection #4 Madison St/Lincoln Ave

Cycle (sec):	100	Critical Vol./Cap.(X):	0.655
Loss Time (sec):	16 (Y+R=4.0 sec)	Average Delay (sec/veh):	33.6
Optimal Cycle:	63	Level Of Service:	C

Street Name:	Madison St									Lincoln Ave		
Approach:	North Bound			South Bound			East Bound			West Bound		
Movement:	L -	T -	R	L -	T -	R	L -	T -	R	L -	T -	R
Control:	Protected			Protected			Protected			Protected		
Rights:	Include			Include			Include			Include		
Min. Green:	7	7	7	7	7	7	7	7	7	7	7	7
Lanes:	1 0	1 1	0	1 0	1 1	0	1 0	0 1	0	1 0	1 1	0
Volume Module:												
Base Vol:	47	352	7	83	783	240	287	321	92	11	246	77
Growth Adj:	1.00	1.00	1.00	1.00	1.00	1.00	1.00	1.00	1.00	1.00	1.00	1.00
Initial Bse:	47	352	7	83	783	240	287	321	92	11	246	77
Added Vol:	0	0	0	0	0	0	0	0	0	0	0	0
PasserByVol:	0	0	0	0	0	0	0	0	0	0	0	0
Initial Fut:	47	352	7	83	783	240	287	321	92	11	246	77
User Adj:	1.00	1.00	1.00	1.00	1.00	1.00	1.00	1.00	1.00	1.00	1.00	1.00
PHF Adj:	1.00	1.00	1.00	1.00	1.00	1.00	1.00	1.00	1.00	1.00	1.00	1.00
PHF Volume:	47	352	7	83	783	240	287	321	92	11	246	77
Reduct Vol:	0	0	0	0	0	0	0	0	0	0	0	0
Reduced Vol:	47	352	7	83	783	240	287	321	92	11	246	77
PCE Adj:	1.00	1.00	1.00	1.00	1.00	1.00	1.00	1.00	1.00	1.00	1.00	1.00
MLF Adj:	1.00	1.00	1.00	1.00	1.00	1.00	1.00	1.00	1.00	1.00	1.00	1.00
FinalVolume:	47	352	7	83	783	240	287	321	92	11	246	77
Saturation Flow Module:												
Sat/Lane:	1900	1900	1900	1900	1900	1900	1900	1900	1900	1900	1900	1900
Adjustment:	0.95	0.95	0.95	0.95	0.92	0.92	0.95	0.97	0.97	0.95	0.92	0.92
Lanes:	1.00	1.96	0.04	1.00	1.53	0.47	1.00	0.78	0.22	1.00	1.52	0.48
Final Sat.:	1805	3529	70	1805	2666	817	1805	1428	409	1805	2650	830
Capacity Analysis Module:												
Vol/Sat:	0.03	0.10	0.10	0.05	0.29	0.29	0.16	0.22	0.22	0.01	0.09	0.09
Crit Moves:	****				****			****		****		
Green/Cycle:	0.07	0.27	0.27	0.19	0.40	0.40	0.24	0.30	0.30	0.07	0.14	0.14
Volume/Cap:	0.37	0.36	0.36	0.24	0.74	0.74	0.67	0.74	0.74	0.09	0.67	0.67
Delay/Veh:	46.2	29.5	29.5	34.5	28.0	28.0	39.0	36.6	36.6	43.8	44.8	44.8
User DelAdj:	1.00	1.00	1.00	1.00	1.00	1.00	1.00	1.00	1.00	1.00	1.00	1.00
AdjDel/Veh:	46.2	29.5	29.5	34.5	28.0	28.0	39.0	36.6	36.6	43.8	44.8	44.8
LOS by Move:	D	C	C	C	C	C	D	D	D	D	D	D
HCM2kAvgQ:	2	5	5	2	15	15	9	13	13	0	6	6

Note: Queue reported is the number of cars per lane.

Traffix 7.9.0415 (c) 2007 Dowling Assoc. Licensed to MMA, LONG BEACH, CA

Overlook Parkway Extension
Future Alt 2 (Gates Opened - No Overlook)
PM Peak Hour

Level Of Service Computation Report
2000 HCM Operations Method (Future Volume Alternative)

Intersection #6 Washington St/Indiana Ave

Cycle (sec):	100	Critical Vol./Cap.(X):	0.952
Loss Time (sec):	12 (Y+R=4.0 sec)	Average Delay (sec/veh):	34.9
Optimal Cycle:	130	Level Of Service:	C

Street Name:	Washington St									Indiana Ave		
Approach:	North Bound			South Bound			East Bound			West Bound		
Movement:	L -	T -	R	L -	T -	R	L -	T -	R	L -	T -	R
Control:	Permitted			Permitted			Protected			Protected		
Rights:	Ovl			Include			Include			Include		
Min. Green:	7	7	7	7	7	7	7	7	7	7	7	7
Lanes:	1 0	0 1	0	1 0	0 1	0	1 0	1 1	0	1 0	1 1	0
Volume Module:												
Base Vol:	202	1	332	18	4	10	3	1169	248	413	981	3
Growth Adj:	1.00	1.00	1.00	1.00	1.00	1.00	1.00	1.00	1.00	1.00	1.00	1.00
Initial Bse:	202	1	332	18	4	10	3	1169	248	413	981	3
Added Vol:	0	0	0	0	0	0	0	0	0	0	0	0
PasserByVol:	0	0	0	0	0	0	0	0	0	0	0	0
Initial Fut:	202	1	332	18	4	10	3	1169	248	413	981	3
User Adj:	1.00	1.00	1.00	1.00	1.00	1.00	1.00	1.00	1.00	1.00	1.00	1.00
PHF Adj:	1.00	1.00	1.00	1.00	1.00	1.00	1.00	1.00	1.00	1.00	1.00	1.00
PHF Volume:	202	1	332	18	4	10	3	1169	248	413	981	3
Reduct Vol:	0	0	0	0	0	0	0	0	0	0	0	0
Reduced Vol:	202	1	332	18	4	10	3	1169	248	413	981	3
PCE Adj:	1.00	1.00	1.00	1.00	1.00	1.00	1.00	1.00	1.00	1.00	1.00	1.00
MLF Adj:	1.00	1.00	1.00	1.00	1.00	1.00	1.00	1.00	1.00	1.00	1.00	1.00
FinalVolume:	202	1	332	18	4	10	3	1169	248	413	981	3
Saturation Flow Module:												
Sat/Lane:	1900	1900	1900	1900	1900	1900	1900	1900	1900	1900	1900	1900
Adjustment:	0.76	0.85	0.85	0.20	0.89	0.89	0.95	0.93	0.93	0.95	0.95	0.95
Lanes:	1.00	0.01	0.99	1.00	0.29	0.71	1.00	1.65	0.35	1.00	1.99	0.01
Final Sat.:	1438	5	1610	384	485	1212	1805	2901	615	1805	3599	11
Capacity Analysis Module:												
Vol/Sat:	0.14	0.21	0.21	0.05	0.01	0.01	0.00	0.40	0.40	0.23	0.27	0.27
Crit Moves:		****						****		****		
Green/Cycle:	0.22	0.22	0.46	0.22	0.22	0.22	0.14	0.42	0.42	0.24	0.53	0.53
Volume/Cap:	0.65	0.95	0.45	0.22	0.04	0.04	0.01	0.95	0.95	0.95	0.52	0.52
Delay/Veh:	40.4	74.3	19.0	33.5	31.0	31.0	37.4	41.5	41.5	68.6	15.6	15.6
User DelAdj:	1.00	1.00	1.00	1.00	1.00	1.00	1.00	1.00	1.00	1.00	1.00	1.00
AdjDel/Veh:	40.4	74.3	19.0	33.5	31.0	31.0	37.4	41.5	41.5	68.6	15.6	15.6
LOS by Move:	D	E	B	C	C	C	D	D	D	E	B	B
HCM2kAvgQ:	7	15	7	1	0	0	0	28	28	17	10	10

Note: Queue reported is the number of cars per lane.

Traffix 7.9.0415 (c) 2007 Dowling Assoc. Licensed to MMA, LONG BEACH, CA

Overlook Parkway Extension
Future Alt 2 (Gates Opened - No Overlook)
PM Peak Hour

Level Of Service Computation Report
2000 HCM 4-Way Stop Method (Future Volume Alternative)

Intersection #7 Washington St/Lincoln Ave

Cycle (sec):	100	Critical Vol./Cap.(X):	1.576
Loss Time (sec):	0 (Y+R=4.0 sec)	Average Delay (sec/veh):	177.9
Optimal Cycle:	0	Level Of Service:	F

Street Name:	Washington St					Lincoln Ave					
Approach:	North Bound			South Bound			East Bound			West Bound		
Movement:	L -	T -	R	L -	T -	R	L -	T -	R	L -	T -	R
Control:	Stop Sign			Stop Sign			Stop Sign			Stop Sign		
Rights:	Include			Include			Include			Include		
Min. Green:	7	7	7	7	7	7	7	7	7	7	7	7
Lanes:	0 0	1! 0	0	0 0	1! 0	0	0 0	1! 0	0	0 1	0 0	1
Volume Module:												
Base Vol:	65	458	43	67	548	33	13	331	66	71	247	41
Growth Adj:	1.00	1.00	1.00	1.00	1.00	1.00	1.00	1.00	1.00	1.00	1.00	1.00
Initial Bse:	65	458	43	67	548	33	13	331	66	71	247	41
Added Vol:	0	0	0	0	0	0	0	0	0	0	0	0
PasserByVol:	0	0	0	0	0	0	0	0	0	0	0	0
Initial Fut:	65	458	43	67	548	33	13	331	66	71	247	41
User Adj:	1.00	1.00	1.00	1.00	1.00	1.00	1.00	1.00	1.00	1.00	1.00	1.00
PHF Adj:	1.00	1.00	1.00	1.00	1.00	1.00	1.00	1.00	1.00	1.00	1.00	1.00
PHF Volume:	65	458	43	67	548	33	13	331	66	71	247	41
Reduct Vol:	0	0	0	0	0	0	0	0	0	0	0	0
Reduced Vol:	65	458	43	67	548	33	13	331	66	71	247	41
PCE Adj:	1.00	1.00	1.00	1.00	1.00	1.00	1.00	1.00	1.00	1.00	1.00	1.00
MLF Adj:	1.00	1.00	1.00	1.00	1.00	1.00	1.00	1.00	1.00	1.00	1.00	1.00
FinalVolume:	65	458	43	67	548	33	13	331	66	71	247	41
Saturation Flow Module:												
Adjustment:	1.00	1.00	1.00	1.00	1.00	1.00	1.00	1.00	1.00	1.00	1.00	1.00
Lanes:	0.11	0.81	0.08	0.10	0.85	0.05	0.03	0.81	0.16	0.22	0.78	1.00
Final Sat.:	47	333	31	43	348	21	13	331	66	86	298	420
Capacity Analysis Module:												
Vol/Sat:	1.37	1.37	1.37	1.58	1.58	1.58	1.00	1.00	1.00	0.83	0.83	0.10
Crit Moves:		****			****			****			****	
Delay/Veh:	208.0	208	208.0	293.2	293	293.2	74.6	74.6	74.6	44.0	44.0	12.2
Delay Adj:	1.00	1.00	1.00	1.00	1.00	1.00	1.00	1.00	1.00	1.00	1.00	1.00
AdjDel/Veh:	208.0	208	208.0	293.2	293	293.2	74.6	74.6	74.6	44.0	44.0	12.2
LOS by Move:	F	F	F	F	F	F	F	F	F	E	E	B
ApproachDel:	208.0			293.2			74.6			40.4		
Delay Adj:	1.00			1.00			1.00			1.00		
ApprAdjDel:	208.0			293.2			74.6			40.4		
LOS by Appr:	F			F			F			E		
AllWayAvgQ:	22.4	22.4	22.4	32.1	32.1	32.1	7.2	7.2	7.2	3.4	3.4	0.1

Traffix 7.9.0415 (c) 2007 Dowling Assoc. Licensed to MMA, LONG BEACH, CA

Overlook Parkway Extension
Future Alt 2 (Gates Opened - No Overlook)
PM Peak Hour

Note: Queue reported is the number of cars per lane.

Traffix 7.9.0415 (c) 2007 Dowling Assoc. Licensed to MMA, LONG BEACH, CA

Overlook Parkway Extension
Future Alt 2 (Gates Opened - No Overlook)
PM Peak Hour

Level Of Service Computation Report
2000 HCM Operations Method (Future Volume Alternative)

Intersection #9 Washington St/Overlook Pkwy

Cycle (sec):	100	Critical Vol./Cap.(X):	0.885
Loss Time (sec):	12 (Y+R=4.0 sec)	Average Delay (sec/veh):	28.0
Optimal Cycle:	103	Level Of Service:	C

Street Name:	Washington St						Overlook Pkwy					
Approach:	North Bound			South Bound			East Bound			West Bound		
Movement:	L -	T -	R	L -	T -	R	L -	T -	R	L -	T -	R
Control:	Protected			Protected			Protected			Protected		
Rights:	Include			Include			Include			Ovl		
Min. Green:	7	7	7	7	7	7	7	7	7	7	7	7
Lanes:	0 0	1 1	0	1 0	2 0	0	0 0	0 0	0	1 0	0 0	1
Volume Module:												
Base Vol:	0	1399	40	670	1785	0	0	0	0	14	0	246
Growth Adj:	1.00	1.00	1.00	1.00	1.00	1.00	1.00	1.00	1.00	1.00	1.00	1.00
Initial Bse:	0	1399	40	670	1785	0	0	0	0	14	0	246
Added Vol:	0	0	0	0	0	0	0	0	0	0	0	0
PasserByVol:	0	0	0	0	0	0	0	0	0	0	0	0
Initial Fut:	0	1399	40	670	1785	0	0	0	0	14	0	246
User Adj:	1.00	1.00	1.00	1.00	1.00	1.00	1.00	1.00	1.00	1.00	1.00	1.00
PHF Adj:	1.00	1.00	1.00	1.00	1.00	1.00	1.00	1.00	1.00	1.00	1.00	1.00
PHF Volume:	0	1399	40	670	1785	0	0	0	0	14	0	246
Reduct Vol:	0	0	0	0	0	0	0	0	0	0	0	0
Reduced Vol:	0	1399	40	670	1785	0	0	0	0	14	0	246
PCE Adj:	1.00	1.00	1.00	1.00	1.00	1.00	1.00	1.00	1.00	1.00	1.00	1.00
MLF Adj:	1.00	1.00	1.00	1.00	1.00	1.00	1.00	1.00	1.00	1.00	1.00	1.00
FinalVolume:	0	1399	40	670	1785	0	0	0	0	14	0	246
Saturation Flow Module:												
Sat/Lane:	1900	1900	1900	1900	1900	1900	1900	1900	1900	1900	1900	1900
Adjustment:	1.00	0.95	0.95	0.95	0.95	1.00	1.00	1.00	1.00	0.95	1.00	0.85
Lanes:	0.00	1.94	0.06	1.00	2.00	0.00	0.00	0.00	0.00	1.00	0.00	1.00
Final Sat.:	0	3496	100	1805	3610	0	0	0	0	1805	0	1615
Capacity Analysis Module:												
Vol/Sat:	0.00	0.40	0.40	0.37	0.49	0.00	0.00	0.00	0.00	0.01	0.00	0.15
Crit Moves:		****		****						****		
Green/Cycle:	0.00	0.42	0.42	0.39	0.71	0.00	0.00	0.00	0.00	0.07	0.00	0.46
Volume/Cap:	0.00	0.95	0.95	0.95	0.70	0.00	0.00	0.00	0.00	0.11	0.00	0.33
Delay/Veh:	0.0	41.5	41.5	52.5	9.2	0.0	0.0	0.0	0.0	44.0	0.0	17.5
User DelAdj:	1.00	1.00	1.00	1.00	1.00	1.00	1.00	1.00	1.00	1.00	1.00	1.00
AdjDel/Veh:	0.0	41.5	41.5	52.5	9.2	0.0	0.0	0.0	0.0	44.0	0.0	17.5
LOS by Move:	A	D	D	D	A	A	A	A	A	D	A	B
HCM2kAvgQ:	0	28	28	25	17	0	0	0	0	0	0	5

Note: Queue reported is the number of cars per lane.

Traffix 7.9.0415 (c) 2007 Dowling Assoc. Licensed to MMA, LONG BEACH, CA

Overlook Parkway Extension
Future Alt 2 (Gates Opened - No Overlook)
PM Peak Hour

Level Of Service Computation Report
2000 HCM Operations Method (Future Volume Alternative)

Intersection #10 Riverside Ave-SR-91 WB/Arlington Ave

Cycle (sec):	100	Critical Vol./Cap.(X):	1.092
Loss Time (sec):	12 (Y+R=4.0 sec)	Average Delay (sec/veh):	67.2
Optimal Cycle:	130	Level Of Service:	E

Street Name:	Riverside Ave-SR-91 WB						Arlington Ave					
Approach:	North Bound			South Bound			East Bound			West Bound		
Movement:	L -	T -	R	L -	T -	R	L -	T -	R	L -	T -	R
Control:	Protected			Protected			Protected			Protected		
Rights:	Include			Ovl			Ignore			Ignore		
Min. Green:	7	7	7	7	7	7	7	7	7	7	7	7
Lanes:	0 0	0 0	0	1 1	0 0	1	1 0	3 0	1	1 0	3 0	1
Volume Module:												
Base Vol:	0	0	0	1021	66	481	35	2024	189	458	1233	194
Growth Adj:	1.00	1.00	1.00	1.00	1.00	1.00	1.00	1.00	1.00	1.00	1.00	1.00
Initial Bse:	0	0	0	1021	66	481	35	2024	189	458	1233	194
Added Vol:	0	0	0	0	0	0	0	0	0	0	0	0
PasserByVol:	0	0	0	0	0	0	0	0	0	0	0	0
Initial Fut:	0	0	0	1021	66	481	35	2024	189	458	1233	194
User Adj:	1.00	1.00	1.00	1.00	1.00	1.00	1.00	1.00	0.00	1.00	1.00	0.00
PHF Adj:	1.00	1.00	1.00	1.00	1.00	1.00	1.00	1.00	0.00	1.00	1.00	0.00
PHF Volume:	0	0	0	1021	66	481	35	2024	0	458	1233	0
Reduct Vol:	0	0	0	0	0	0	0	0	0	0	0	0
Reduced Vol:	0	0	0	1021	66	481	35	2024	0	458	1233	0
PCE Adj:	1.00	1.00	1.00	1.00	1.00	1.00	1.00	1.00	0.00	1.00	1.00	0.00
MLF Adj:	1.00	1.00	1.00	1.00	1.00	1.00	1.00	1.00	0.00	1.00	1.00	0.00
FinalVolume:	0	0	0	1021	66	481	35	2024	0	458	1233	0
Saturation Flow Module:												
Sat/Lane:	1900	1900	1900	1900	1900	1900	1900	1900	1900	1900	1900	1900
Adjustment:	1.00	1.00	1.00	0.90	0.90	0.85	0.95	0.91	1.00	0.95	0.91	1.00
Lanes:	0.00	0.00	0.00	1.88	0.12	1.00	1.00	3.00	1.00	1.00	3.00	1.00
Final Sat.:	0	0	0	3219	208	1615	1805	5187	1900	1805	5187	1900
Capacity Analysis Module:												
Vol/Sat:	0.00	0.00	0.00	0.32	0.32	0.30	0.02	0.39	0.00	0.25	0.24	0.00
Crit Moves:				****				****		****		
Green/Cycle:	0.00	0.00	0.00	0.29	0.29	0.42	0.13	0.36	0.00	0.23	0.46	0.00
Volume/Cap:	0.00	0.00	0.00	1.09	1.09	0.70	0.14	1.09	0.00	1.09	0.52	0.00
Delay/Veh:	0.0	0.0	0.0	92.5	92.5	26.9	38.5	83.0	0.0	109.5	19.7	0.0
User DelAdj:	1.00	1.00	1.00	1.00	1.00	1.00	1.00	1.00	1.00	1.00	1.00	1.00
AdjDel/Veh:	0.0	0.0	0.0	92.5	92.5	26.9	38.5	83.0	0.0	109.5	19.7	0.0
LOS by Move:	A	A	A	F	F	C	D	F	A	F	B	A
HCM2kAvgQ:	0	0	0	27	27	13	1	35	0	23	10	0

Note: Queue reported is the number of cars per lane.

Traffix 7.9.0415 (c) 2007 Dowling Assoc. Licensed to MMA, LONG BEACH, CA

Overlook Parkway Extension
Future Alt 2 (Gates Opened - No Overlook)
PM Peak Hour

Level Of Service Computation Report
2000 HCM Operations Method (Future Volume Alternative)

Intersection #11 Indiana Ave-SR-91 EB/Arlington Ave

Cycle (sec):	100	Critical Vol./Cap.(X):	1.121
Loss Time (sec):	12 (Y+R=4.0 sec)	Average Delay (sec/veh):	59.6
Optimal Cycle:	130	Level Of Service:	E

Street Name:	Indiana Ave-SR-91 EB						Arlington Ave					
Approach:	North Bound			South Bound			East Bound			West Bound		
Movement:	L -	T -	R	L -	T -	R	L -	T -	R	L -	T -	R
Control:	Protected			Protected			Protected			Protected		
Rights:	Ovl			Include			Ovl			Ignore		
Min. Green:	7	7	7	7	7	7	7	7	7	7	7	7
Lanes:	1 1	1 0	1	0 0	0 0	0	1 0	2 0	1	1 0	4 0	1
Volume Module:												
Base Vol:	186	189	689	0	0	0	277	2022	639	377	1840	207
Growth Adj:	1.00	1.00	1.00	1.00	1.00	1.00	1.00	1.00	1.00	1.00	1.00	1.00
Initial Bse:	186	189	689	0	0	0	277	2022	639	377	1840	207
Added Vol:	0	0	0	0	0	0	0	0	0	0	0	0
PasserByVol:	0	0	0	0	0	0	0	0	0	0	0	0
Initial Fut:	186	189	689	0	0	0	277	2022	639	377	1840	207
User Adj:	1.00	1.00	1.00	1.00	1.00	1.00	1.00	1.00	1.00	1.00	1.00	0.00
PHF Adj:	1.00	1.00	1.00	1.00	1.00	1.00	1.00	1.00	1.00	1.00	1.00	0.00
PHF Volume:	186	189	689	0	0	0	277	2022	639	377	1840	0
Reduct Vol:	0	0	0	0	0	0	0	0	0	0	0	0
Reduced Vol:	186	189	689	0	0	0	277	2022	639	377	1840	0
PCE Adj:	1.00	1.00	1.00	1.00	1.00	1.00	1.00	1.00	1.00	1.00	1.00	0.00
MLF Adj:	1.00	1.00	1.00	1.00	1.00	1.00	1.00	1.00	1.00	1.00	1.00	0.00
FinalVolume:	186	189	689	0	0	0	277	2022	639	377	1840	0
Saturation Flow Module:												
Sat/Lane:	1900	1900	1900	1900	1900	1900	1900	1900	1900	1900	1900	1900
Adjustment:	0.93	0.93	0.85	1.00	1.00	1.00	0.95	0.95	0.85	0.95	0.91	1.00
Lanes:	1.49	1.51	1.00	0.00	0.00	0.00	1.00	2.00	1.00	1.00	4.00	1.00
Final Sat.:	2616	2658	1615	0	0	0	1805	3610	1615	1805	6916	1900
Capacity Analysis Module:												
Vol/Sat:	0.07	0.07	0.43	0.00	0.00	0.00	0.15	0.56	0.40	0.21	0.27	0.00
Crit Moves:			****					****		****		
Green/Cycle:	0.13	0.19	0.38	0.00	0.00	0.00	0.25	0.50	0.63	0.19	0.43	0.00
Volume/Cap:	0.53	0.37	1.12	0.00	0.00	0.00	0.61	1.12	0.63	1.12	0.61	0.00
Delay/Veh:	41.3	35.2	105.4	0.0	0.0	0.0	35.6	87.6	12.4	126.7	22.1	0.0
User DelAdj:	1.00	1.00	1.00	1.00	1.00	1.00	1.00	1.00	1.00	1.00	1.00	1.00
AdjDel/Veh:	41.3	35.2	105.4	0.0	0.0	0.0	35.6	87.6	12.4	126.7	22.1	0.0
LOS by Move:	D	D	F	A	A	A	D	F	B	F	C	A
HCM2kAvgQ:	4	4	34	0	0	0	8	50	12	20	12	0

Note: Queue reported is the number of cars per lane.

Traffix 7.9.0415 (c) 2007 Dowling Assoc. Licensed to MMA, LONG BEACH, CA

Overlook Parkway Extension
Future Alt 2 (Gates Opened - No Overlook)
PM Peak Hour

Level Of Service Computation Report
2000 HCM Operations Method (Future Volume Alternative)

Intersection #12 Victoria Ave/Arlington Ave

Cycle (sec):	100	Critical Vol./Cap.(X):	1.037
Loss Time (sec):	16 (Y+R=4.0 sec)	Average Delay (sec/veh):	68.6
Optimal Cycle:	130	Level Of Service:	E

Street Name:	Victoria Ave						Arlington Ave					
Approach:	North Bound			South Bound			East Bound			West Bound		
Movement:	L -	T -	R	L -	T -	R	L -	T -	R	L -	T -	R
Control:	Protected			Protected			Protected			Protected		
Rights:	Ovl			Include			Include			Include		
Min. Green:	7	7	7	7	7	7	7	7	7	7	7	7
Lanes:	1 0	1 0	1	1 0	1 0	1	1 0	2 1	0	1 0	2 1	0
Volume Module:												
Base Vol:	19	255	430	172	377	210	216	2358	31	362	1804	101
Growth Adj:	1.00	1.00	1.00	1.00	1.00	1.00	1.00	1.00	1.00	1.00	1.00	1.00
Initial Bse:	19	255	430	172	377	210	216	2358	31	362	1804	101
Added Vol:	0	0	0	0	0	0	0	0	0	0	0	0
PasserByVol:	0	0	0	0	0	0	0	0	0	0	0	0
Initial Fut:	19	255	430	172	377	210	216	2358	31	362	1804	101
User Adj:	1.00	1.00	1.00	1.00	1.00	1.00	1.00	1.00	1.00	1.00	1.00	1.00
PHF Adj:	1.00	1.00	1.00	1.00	1.00	1.00	1.00	1.00	1.00	1.00	1.00	1.00
PHF Volume:	19	255	430	172	377	210	216	2358	31	362	1804	101
Reduct Vol:	0	0	0	0	0	0	0	0	0	0	0	0
Reduced Vol:	19	255	430	172	377	210	216	2358	31	362	1804	101
PCE Adj:	1.00	1.00	1.00	1.00	1.00	1.00	1.00	1.00	1.00	1.00	1.00	1.00
MLF Adj:	1.00	1.00	1.00	1.00	1.00	1.00	1.00	1.00	1.00	1.00	1.00	1.00
FinalVolume:	19	255	430	172	377	210	216	2358	31	362	1804	101
Saturation Flow Module:												
Sat/Lane:	1900	1900	1900	1900	1900	1900	1900	1900	1900	1900	1900	1900
Adjustment:	0.95	1.00	0.85	0.95	1.00	0.85	0.95	0.91	0.91	0.95	0.90	0.90
Lanes:	1.00	1.00	1.00	1.00	1.00	1.00	1.00	2.96	0.04	1.00	2.84	0.16
Final Sat.:	1805	1900	1615	1805	1900	1615	1805	5109	67	1805	4873	273
Capacity Analysis Module:												
Vol/Sat:	0.01	0.13	0.27	0.10	0.20	0.13	0.12	0.46	0.46	0.20	0.37	0.37
Crit Moves:	****				****			****		****		
Green/Cycle:	0.07	0.14	0.32	0.10	0.18	0.18	0.14	0.41	0.41	0.18	0.45	0.45
Volume/Cap:	0.15	0.93	0.82	0.93	1.12	0.73	0.83	1.12	1.12	1.12	0.83	0.83
Delay/Veh:	44.3	77.6	41.1	90.1	126	48.2	60.7	89.3	89.3	126.6	26.8	26.8
User DelAdj:	1.00	1.00	1.00	1.00	1.00	1.00	1.00	1.00	1.00	1.00	1.00	1.00
AdjDel/Veh:	44.3	77.6	41.1	90.1	126	48.2	60.7	89.3	89.3	126.6	26.8	26.8
LOS by Move:	D	E	D	F	F	D	E	F	F	F	C	C
HCM2kAvgQ:	1	12	15	9	20	8	9	42	42	20	21	21

Note: Queue reported is the number of cars per lane.

Traffix 7.9.0415 (c) 2007 Dowling Assoc. Licensed to MMA, LONG BEACH, CA

Overlook Parkway Extension
Future Alt 2 (Gates Opened - No Overlook)
PM Peak Hour

Level Of Service Computation Report
2000 HCM Operations Method (Future Volume Alternative)

Intersection #13 Alessandro Blvd/Arlington Ave

Cycle (sec):	100	Critical Vol./Cap.(X):	1.231
Loss Time (sec):	16 (Y+R=4.0 sec)	Average Delay (sec/veh):	117.6
Optimal Cycle:	130	Level Of Service:	F

Street Name:	Alessandro Blvd						Arlington Ave					
Approach:	North Bound			South Bound			East Bound			West Bound		
Movement:	L - T - R			L - T - R			L - T - R			L - T - R		
Control:	Protected			Protected			Protected			Protected		
Rights:	Ovl			Include			Ovl			Ovl		
Min. Green:	7	7	7	7	7	7	7	7	7	7	7	7
Lanes:	2 0	2 0	1	2 0	2 1	0	1 0	2 0	2	2 0	2 0	1
Volume Module:												
Base Vol:	1324	936	115	423	1475	38	101	954	1799	346	930	283
Growth Adj:	1.00	1.00	1.00	1.00	1.00	1.00	1.00	1.00	1.00	1.00	1.00	1.00
Initial Bse:	1324	936	115	423	1475	38	101	954	1799	346	930	283
Added Vol:	0	0	0	0	0	0	0	0	0	0	0	0
PasserByVol:	0	0	0	0	0	0	0	0	0	0	0	0
Initial Fut:	1324	936	115	423	1475	38	101	954	1799	346	930	283
User Adj:	1.00	1.00	1.00	1.00	1.00	1.00	1.00	1.00	1.00	1.00	1.00	1.00
PHF Adj:	1.00	1.00	1.00	1.00	1.00	1.00	1.00	1.00	1.00	1.00	1.00	1.00
PHF Volume:	1324	936	115	423	1475	38	101	954	1799	346	930	283
Reduct Vol:	0	0	0	0	0	0	0	0	0	0	0	0
Reduced Vol:	1324	936	115	423	1475	38	101	954	1799	346	930	283
PCE Adj:	1.00	1.00	1.00	1.00	1.00	1.00	1.00	1.00	1.00	1.00	1.00	1.00
MLF Adj:	1.00	1.00	1.00	1.00	1.00	1.00	1.00	1.00	1.00	1.00	1.00	1.00
FinalVolume:	1324	936	115	423	1475	38	101	954	1799	346	930	283
Saturation Flow Module:												
Sat/Lane:	1900	1900	1900	1900	1900	1900	1900	1900	1900	1900	1900	1900
Adjustment:	0.92	0.95	0.85	0.92	0.91	0.91	0.95	0.95	0.75	0.92	0.95	0.85
Lanes:	2.00	2.00	1.00	2.00	2.92	0.08	1.00	2.00	2.00	2.00	2.00	1.00
Final Sat.:	3502	3610	1615	3502	5036	130	1805	3610	2842	3502	3610	1615
Capacity Analysis Module:												
Vol/Sat:	0.38	0.26	0.07	0.12	0.29	0.29	0.06	0.26	0.63	0.10	0.26	0.18
Crit Moves:	****				****			****		****		
Green/Cycle:	0.31	0.37	0.45	0.17	0.24	0.24	0.07	0.21	0.52	0.08	0.22	0.40
Volume/Cap:	1.23	0.70	0.16	0.70	1.23	1.23	0.80	1.23	1.21	1.23	1.15	0.44
Delay/Veh:	146.9	28.3	16.3	42.4	149	149.3	74.9	154	126.2	177.0	118	22.4
User DelAdj:	1.00	1.00	1.00	1.00	1.00	1.00	1.00	1.00	1.00	1.00	1.00	1.00
AdjDel/Veh:	146.9	28.3	16.3	42.4	149	149.3	74.9	154	126.2	177.0	118	22.4
LOS by Move:	F	C	B	D	F	F	E	F	F	F	F	C
HCM2kAvgQ:	39	14	2	8	32	32	5	30	56	12	26	7

Note: Queue reported is the number of cars per lane.

Traffix 7.9.0415 (c) 2007 Dowling Assoc. Licensed to MMA, LONG BEACH, CA

Overlook Parkway Extension
Future Alt 2 (Gates Opened - No Overlook)
PM Peak Hour

Level Of Service Computation Report
2000 HCM Operations Method (Future Volume Alternative)

Intersection #14 Alessandro Blvd/Overlook Pkwy

Cycle (sec):	100	Critical Vol./Cap.(X):	1.092
Loss Time (sec):	16 (Y+R=4.0 sec)	Average Delay (sec/veh):	108.3
Optimal Cycle:	130	Level Of Service:	F

Street Name:	Alessandro Blvd						Overlook Pkwy					
Approach:	North Bound			South Bound			East Bound			West Bound		
Movement:	L - T - R			L - T - R			L - T - R			L - T - R		
Control:	Protected			Protected			Protected			Protected		
Rights:	Include			Include			Include			Include		
Min. Green:	7	7	7	7	7	7	7	7	7	7	7	7
Lanes:	1 0	3 0	1	1 0	2 1	0	1 0	1 1	0	2 0	1 1	0
Volume Module:												
Base Vol:	10	2053	809	89	3129	22	10	16	27	1005	33	51
Growth Adj:	1.00	1.00	1.00	1.00	1.00	1.00	1.00	1.00	1.00	1.00	1.00	1.00
Initial Bse:	10	2053	809	89	3129	22	10	16	27	1005	33	51
Added Vol:	0	0	0	0	0	0	0	0	0	0	0	0
PasserByVol:	0	0	0	0	0	0	0	0	0	0	0	0
Initial Fut:	10	2053	809	89	3129	22	10	16	27	1005	33	51
User Adj:	1.00	1.00	1.00	1.00	1.00	1.00	1.00	1.00	1.00	1.00	1.00	1.00
PHF Adj:	1.00	1.00	1.00	1.00	1.00	1.00	1.00	1.00	1.00	1.00	1.00	1.00
PHF Volume:	10	2053	809	89	3129	22	10	16	27	1005	33	51
Reduct Vol:	0	0	0	0	0	0	0	0	0	0	0	0
Reduced Vol:	10	2053	809	89	3129	22	10	16	27	1005	33	51
PCE Adj:	1.00	1.00	1.00	1.00	1.00	1.00	1.00	1.00	1.00	1.00	1.00	1.00
MLF Adj:	1.00	1.00	1.00	1.00	1.00	1.00	1.00	1.00	1.00	1.00	1.00	1.00
FinalVolume:	10	2053	809	89	3129	22	10	16	27	1005	33	51
Saturation Flow Module:												
Sat/Lane:	1900	1900	1900	1900	1900	1900	1900	1900	1900	1900	1900	1900
Adjustment:	0.95	0.91	0.85	0.95	0.91	0.91	0.95	0.86	0.86	0.92	0.86	0.86
Lanes:	1.00	3.00	1.00	1.00	2.98	0.02	1.00	1.00	1.00	2.00	1.00	1.00
Final Sat.:	1805	5187	1615	1805	5146	36	1805	1635	1635	3502	1641	1641
Capacity Analysis Module:												
Vol/Sat:	0.01	0.40	0.50	0.05	0.61	0.61	0.01	0.01	0.02	0.29	0.02	0.03
Crit Moves:	****				****				****	****		
Green/Cycle:	0.07	0.48	0.48	0.07	0.48	0.48	0.15	0.07	0.07	0.22	0.15	0.15
Volume/Cap:	0.08	0.83	1.05	0.70	1.28	1.28	0.04	0.14	0.24	1.28	0.14	0.21
Delay/Veh:	43.8	25.3	73.7	62.0	155	154.9	36.6	43.9	44.6	173.9	37.2	37.8
User DelAdj:	1.00	1.00	1.00	1.00	1.00	1.00	1.00	1.00	1.00	1.00	1.00	1.00
AdjDel/Veh:	43.8	25.3	73.7	62.0	155	154.9	36.6	43.9	44.6	173.9	37.2	37.8
LOS by Move:	D	C	E	E	F	F	D	D	D	F	D	D
HCM2kAvgQ:	0	22	35	4	68	68	0	1	1	32	1	2

Note: Queue reported is the number of cars per lane.

Traffix 7.9.0415 (c) 2007 Dowling Assoc. Licensed to MMA, LONG BEACH, CA

Overlook Parkway Extension
Future Alt 2 (Gates Opened - No Overlook)
PM Peak Hour

Level Of Service Computation Report
2000 HCM Operations Method (Future Volume Alternative)

Intersection #15 Alessandro Blvd/Trautwein Rd

Cycle (sec):	100	Critical Vol./Cap.(X):	0.982
Loss Time (sec):	12 (Y+R=4.0 sec)	Average Delay (sec/veh):	42.4
Optimal Cycle:	130	Level Of Service:	D

Street Name:	Alessandro Blvd								Trautwein Rd								
Approach:	North Bound				South Bound				East Bound				West Bound				
Movement:	L	-	T	-	R	L	-	T	-	R	L	-	T	-	R	L	-	T	-	R	L	-	T	-	R
Control:	Protected					Protected					Protected					Protected				
Rights:	Include					Ignore					Ignore					Include				
Min. Green:	7	7	7			7	7	7			7	7	7			7	7	7		
Lanes:	2	0	3	0	0	0	0	3	0	1	3	0	0	0	1	0	0	0	0	0
Volume Module:																				
Base Vol:	415	1400		0		0	2313	1663	1573		0	479		0		0		0		
Growth Adj:	1.00	1.00	1.00	1.00		1.00	1.00	1.00	1.00		1.00	1.00		1.00		1.00	1.00	1.00		
Initial Bse:	415	1400		0		0	2313	1663	1573		0	479		0		0		0		
Added Vol:	0	0		0		0	0	0	0		0	0		0		0		0		
PasserByVol:	0	0		0		0	0	0	0		0	0		0		0		0		
Initial Fut:	415	1400		0		0	2313	1663	1573		0	479		0		0		0		
User Adj:	1.00	1.00	1.00	1.00		1.00	0.00	1.00	1.00		0.00	1.00		1.00		1.00		1.00		
PHF Adj:	1.00	1.00	1.00	1.00		1.00	0.00	1.00	1.00		0.00	1.00		1.00		1.00		1.00		
PHF Volume:	415	1400		0		0	2313		1573		0			0		0		0		
Reduct Vol:	0	0		0		0	0		0		0			0		0		0		
Reduced Vol:	415	1400		0		0	2313		1573		0			0		0		0		
PCE Adj:	1.00	1.00	1.00	1.00		1.00	0.00	1.00	1.00		0.00	1.00		1.00		1.00		1.00		
MLF Adj:	1.00	1.00	1.00	1.00		1.00	0.00	1.00	1.00		0.00	1.00		1.00		1.00		1.00		
FinalVolume:	415	1400		0		0	2313		1573		0			0		0		0		
Saturation Flow Module:																				
Sat/Lane:	1900	1900	1900	1900		1900	1900	1900	1900		1900	1900		1900		1900	1900	1900		
Adjustment:	0.92	0.91	1.00	1.00		0.91	1.00	0.92	1.00		1.00	1.00		1.00		1.00	1.00	1.00		
Lanes:	2.00	3.00	0.00	0.00		3.00	1.00	3.00	0.00		1.00	0.00		0.00		0.00	0.00	0.00		
Final Sat.:	3502	5187		0		0	5187	1900	5253		0	1900		0		0		0		
Capacity Analysis Module:																				
Vol/Sat:	0.12	0.27	0.00	0.00		0.45	0.00	0.30	0.00		0.00	0.00		0.00		0.00	0.00	0.00		
Crit Moves:	****					****		****												
Green/Cycle:	0.12	0.46	0.00	0.00		0.45	0.00	0.31	0.00		0.00	0.00		0.00		0.00	0.00	0.00		
Volume/Cap:	0.98	0.59	0.00	0.00		0.98	0.00	0.98	0.00		0.00	0.00		0.00		0.00	0.00	0.00		
Delay/Veh:	82.7	20.6	0.0	0.0		41.3	0.0	52.7	0.0		0.0	0.0		0.0		0.0	0.0	0.0		
User DelAdj:	1.00	1.00	1.00	1.00		1.00	1.00	1.00	1.00		1.00	1.00		1.00		1.00	1.00	1.00		
AdjDel/Veh:	82.7	20.6	0.0	0.0		41.3	0.0	52.7	0.0		0.0	0.0		0.0		0.0	0.0	0.0		
LOS by Move:	F	C	A	A		D	A	D	A		A	A		A		A	A	A		
HCM2kAvgQ:	11	12	0	0		33	0	23	0		0	0		0		0	0	0		

Note: Queue reported is the number of cars per lane.

Traffix 7.9.0415 (c) 2007 Dowling Assoc. Licensed to MMA, LONG BEACH, CA

Overlook Parkway Extension
Future Alt 2 (Gates Opened - No Overlook)
PM Peak Hour

Level Of Service Computation Report
2000 HCM 4-Way Stop Method (Future Volume Alternative)

Intersection #16 Crystal View Ter/Overlook Pkwy

Cycle (sec):	100	Critical Vol./Cap.(X):	0.708
Loss Time (sec):	0 (Y+R=4.0 sec)	Average Delay (sec/veh):	15.0
Optimal Cycle:	0	Level Of Service:	B

Street Name:	Crystal View Ter								Overlook Pkwy								
Approach:	North Bound				South Bound				East Bound				West Bound				
Movement:	L	-	T	-	R	L	-	T	-	R	L	-	T	-	R	L	-	T	-	R	L	-	T	-	R
Control:	Stop Sign					Stop Sign					Stop Sign					Stop Sign				
Rights:	Include					Include					Include					Include				
Min. Green:	7	7	7			7	7	7			7	7	7			7	7	7		
Lanes:	1	0	0	0	0	0	0	1	0	0	1	0	1	1	0	1	0	1	1	0
Volume Module:																				
Base Vol:	185		0		0		0	2		0		1		0	583		0		0	
Growth Adj:	1.00	1.00	1.00		1.00	1.00	1.00	1.00		1.00	1.00	1.00		1.00	1.00	1.00	1.00	1.00		
Initial Bse:	185		0		0		0	2		0		1		0	583		0		0	
Added Vol:	0		0		0		0	0		0		0		0	0		0		0	
PasserByVol:	0		0		0		0	0		0		0		0	0		0		0	
Initial Fut:	185		0		0		0	2		0		1		0	583		0		0	
User Adj:	1.00	1.00	1.00		1.00	1.00	1.00	1.00		1.00	1.00	1.00		1.00	1.00	1.00	1.00	1.00		
PHF Adj:	1.00	1.00	1.00		1.00	1.00	1.00	1.00		1.00	1.00	1.00		1.00	1.00	1.00	1.00	1.00		
PHF Volume:	185		0		0		0	2		0		1		0	583		0		0	
Reduct Vol:	0		0		0		0	0		0		0		0	0		0		0	
Reduced Vol:	185		0		0		0	2		0		1		0	583		0		0	
PCE Adj:	1.00	1.00	1.00		1.00	1.00	1.00	1.00		1.00	1.00	1.00		1.00	1.00	1.00	1.00	1.00		
MLF Adj:	1.00	1.00	1.00		1.00	1.00	1.00	1.00		1.00	1.00	1.00		1.00	1.00	1.00	1.00	1.00		
FinalVolume:	185		0		0		0	2		0		1		0	583		0		0	
Saturation Flow Module:																				
Adjustment:	1.00	1.00	1.00		1.00	1.00	1.00	1.00		1.00	1.00	1.00		1.00	1.00	1.00	1.00	1.00		
Lanes:	1.00	0.00	0.00		0.00	1.00	0.00	1.00		1.00	1.00	1.00		1.00	1.00	2.00	0.00			
Final Sat.:	621		0		0		0	590		0		646		710	824		576	1252		
Capacity Analysis Module:																				
Vol/Sat:	0.30	xxxx	xxxx		xxxx	0.00	xxxx	0.00		0.00		0.71		0.00	0.00	xxxx				
Crit Moves:	****					****						****			****					
Delay/Veh:	10.5	0.0	0.0		0.0	8.5	0.0	8.2		0.0		16.4		0.0	0.0	0.0				
Delay Adj:	1.00	1.00	1.00		1.00	1.00	1.00	1.00		1.00		1.00		1.00	1.00	1.00				
AdjDel/Veh:	10.5	0.0	0.0		0.0	8.5	0.0	8.2		0.0		16.4		0.0	0.0	0.0				
LOS by Move:	B	*	*		*	A	*	A		*		C		*	*	*				
ApproachDel:	10.5					8.5						16.4			xxxxxx					
Delay Adj:	1.00					1.00						1.00			xxxxx					
ApprAdjDel:	10.5					8.5						16.4			xxxxxx					
LOS by Appr:	B					A						C			*					
AllWayAvgQ:	0.4	0.4	0.4		0.0	0.0	0.0	0.0		0.0		2.2		0.0	0.0	0.0				

Traffix 7.9.0415 (c) 2007 Dowling Assoc. Licensed to MMA, LONG BEACH, CA

Overlook Parkway Extension
Future Alt 2 (Gates Opened - No Overlook)
PM Peak Hour

Note: Queue reported is the number of cars per lane.

Overlook Parkway Extension
Future Alt 2 (Gates Opened - No Overlook)
PM Peak Hour

Level Of Service Computation Report
2000 HCM Unsignalized Method (Future Volume Alternative)

Intersection #17 Kingdom Dr/Overlook Pkwy

Average Delay (sec/veh): 1.3 Worst Case Level Of Service: C[19.7]

Street Name:	Kingdom Dr									Overlook Pkwy								
Approach:	North Bound				South Bound				East Bound				West Bound					
Movement:	L	-	T	-	R	L	-	T	-	R	L	-	T	-	R	L	-	T	-	R
Control:	Stop Sign					Stop Sign					Uncontrolled					Uncontrolled				
Rights:	Include					Include					Include					Include				
Lanes:	0	0	1!	0	0	1	0	0	0	0	1	0	1	1	0	1	0	1	1	0
Volume Module:																				
Base Vol:	46	0	12			5	0				0	566	243			20	172			5
Growth Adj:	1.00	1.00	1.00			1.00	1.00				1.00	1.00	1.00			1.00	1.00			1.00
Initial Bse:	46	0	12			5	0				0	566	243			20	172			5
Added Vol:	0	0	0			0	0				0	0	0			0	0			0
PasserByVol:	0	0	0			0	0				0	0	0			0	0			0
Initial Fut:	46	0	12			5	0				0	566	243			20	172			5
User Adj:	1.00	1.00	1.00			1.00	1.00				1.00	1.00	1.00			1.00	1.00			1.00
PHF Adj:	1.00	1.00	1.00			1.00	1.00				1.00	1.00	1.00			1.00	1.00			1.00
PHF Volume:	46	0	12			5	0				0	566	243			20	172			5
Reduct Vol:	0	0	0			0	0				0	0	0			0	0			0
FinalVolume:	46	0	12			5	0				0	566	243			20	172			5
Critical Gap Module:																				
Critical Gp:	7.5	6.5	6.9			7.5	xxxx	xxxxx	xxxxx	xxxx	xxxxx		4.1	xxxx	xxxxx					
FollowUpTim:	3.5	4.0	3.3			3.5	xxxx	xxxxx	xxxxx	xxxx	xxxxx		2.2	xxxx	xxxxx					
Capacity Module:																				
Cnflict Vol:	814	905	405			498	xxxx	xxxxx	xxxx	xxxx	xxxxx		809	xxxx	xxxxx					
Potent Cap.:	273	279	601			460	xxxx	xxxxx	xxxx	xxxx	xxxxx		825	xxxx	xxxxx					
Move Cap.:	268	272	601			443	xxxx	xxxxx	xxxx	xxxx	xxxxx		825	xxxx	xxxxx					
Volume/Cap:	0.17	0.00	0.02			0.01	xxxx	xxxx	xxxx	xxxx	xxxx		0.02	xxxx	xxxx					
Level Of Service Module:																				
2Way95thQ:	xxxx	xxxx	xxxxx			0.0	xxxx	xxxxx	xxxx	xxxx	xxxxx		0.1	xxxx	xxxxx					
Control Del:	xxxxx	xxxx	xxxxx			13.2	xxxx	xxxxx	xxxxx	xxxx	xxxxx		9.5	xxxx	xxxxx					
LOS by Move:	*	*	*			B	*	*	*	*	*		A	*	*					
Movement:	LT	-	LTR	-	RT	LT	-	LTR	-	RT	LT	-	LTR	-	RT	LT	-	LTR	-	RT
Shared Cap.:	xxxx	303	xxxxx			xxxx	xxxx	xxxxx			xxxx	xxxx	xxxxx			xxxx	xxxx	xxxxx		
SharedQueue:	xxxxx	0.7	xxxxx			xxxxx	xxxx	xxxxx			xxxxx	xxxx	xxxxx			xxxxx	xxxx	xxxxx		
Shrd ConDel:	xxxxx	19.7	xxxxx			xxxxx	xxxx	xxxxx			xxxxx	xxxx	xxxxx			xxxxx	xxxx	xxxxx		
Shared LOS:	*	C	*			*	*	*			*	*	*			*	*	*		
ApproachDel:	19.7					13.2					xxxxxx					xxxxxx				
ApproachLOS:	C					B					*					*				

Note: Queue reported is the number of cars per lane.

Overlook Parkway Extension
Future Alt 2 (Gates Opened - No Overlook)
PM Peak Hour

Level Of Service Computation Report
2000 HCM Unsignalized Method (Future Volume Alternative)

Intersection #18 Kingdom Dr/Green Orchard Pl

Average Delay (sec/veh): 6.3 Worst Case Level Of Service: A[8.5]

Street Name:	Kingdom Dr								Green Orchard Pl							
Approach:	North Bound				South Bound				East Bound				West Bound			
Movement:	L	-	T	- R	L	-	T	- R	L	-	T	- R	L	-	T	- R
Control:	Uncontrolled				Uncontrolled				Stop Sign				Stop Sign			
Rights:	Include				Include				Include				Include			
Lanes:	0	0	0	1 0	0	1	0	0 0	0	0	0	0 0	0	0	0	0 1
Volume Module:																
Base Vol:	0	15	3	217	40	0	0	0	0	0	0	0	0	0	0	44
Growth Adj:	1.00	1.00	1.00	1.00	1.00	1.00	1.00	1.00	1.00	1.00	1.00	1.00	1.00	1.00	1.00	1.00
Initial Bse:	0	15	3	217	40	0	0	0	0	0	0	0	0	0	0	44
Added Vol:	0	0	0	0	0	0	0	0	0	0	0	0	0	0	0	0
PasserByVol:	0	0	0	0	0	0	0	0	0	0	0	0	0	0	0	0
Initial Fut:	0	15	3	217	40	0	0	0	0	0	0	0	0	0	0	44
User Adj:	1.00	1.00	1.00	1.00	1.00	1.00	1.00	1.00	1.00	1.00	1.00	1.00	1.00	1.00	1.00	1.00
PHF Adj:	1.00	1.00	1.00	1.00	1.00	1.00	1.00	1.00	1.00	1.00	1.00	1.00	1.00	1.00	1.00	1.00
PHF Volume:	0	15	3	217	40	0	0	0	0	0	0	0	0	0	0	44
Reduct Vol:	0	0	0	0	0	0	0	0	0	0	0	0	0	0	0	0
FinalVolume:	0	15	3	217	40	0	0	0	0	0	0	0	0	0	0	44
Critical Gap Module:																
Critical Gp:	xxxxx	xxxx	xxxxx	4.1	xxxx	xxxxx	xxxxx	xxxx	xxxxx	xxxxx	xxxx	6.2				
FollowUpTim:	xxxxx	xxxx	xxxxx	2.2	xxxx	xxxxx	xxxxx	xxxx	xxxxx	xxxxx	xxxx	3.3				
Capacity Module:																
Cnflict Vol:	xxxx	xxxx	xxxxx	18	xxxx	xxxxx	xxxx	xxxx	xxxxx	xxxx	xxxx	17				
Potent Cap.:	xxxx	xxxx	xxxxx	1612	xxxx	xxxxx	xxxx	xxxx	xxxxx	xxxx	xxxx	1068				
Move Cap.:	xxxx	xxxx	xxxxx	1612	xxxx	xxxxx	xxxx	xxxx	xxxxx	xxxx	xxxx	1068				
Volume/Cap:	xxxx	xxxx	xxxx	0.13	xxxx	xxxx	xxxx	xxxx	xxxx	xxxx	xxxx	0.04				
Level Of Service Module:																
2Way95thQ:	xxxx	xxxx	xxxxx	0.5	xxxx	xxxxx	xxxx	xxxx	xxxxx	xxxx	xxxx	0.1				
Control Del:	xxxxx	xxxx	xxxxx	7.6	xxxx	xxxxx	xxxxx	xxxx	xxxxx	xxxxx	xxxx	8.5				
LOS by Move:	*	*	*	A	*	*	*	*	*	*	*	A				
Movement:	LT -	LTR -	RT	LT -	LTR -	RT	LT -	LTR -	RT	LT -	LTR -	RT				
Shared Cap.:	xxxx	xxxx	xxxxx	xxxx	xxxx	xxxxx	xxxx	xxxx	xxxxx	xxxx	xxxx	xxxxx				
SharedQueue:	xxxxx	xxxx	xxxxx	0.5	xxxx	xxxxx	xxxxx	xxxx	xxxxx	xxxxx	xxxx	xxxxx				
Shrd ConDel:	xxxxx	xxxx	xxxxx	7.6	xxxx	xxxxx	xxxxx	xxxx	xxxxx	xxxxx	xxxx	xxxxx				
Shared LOS:	*	*	*	A	*	*	*	*	*	*	*	*				
ApproachDel:	xxxxxx			xxxxxx			xxxxxx			8.5						
ApproachLOS:	*			*			*			A						

Note: Queue reported is the number of cars per lane.

Traffix 7.9.0415 (c) 2007 Dowling Assoc. Licensed to MMA, LONG BEACH, CA

Overlook Parkway Extension
Future Alt 2 (Gates Opened - No Overlook)
PM Peak Hour

Level Of Service Computation Report
2000 HCM Operations Method (Future Volume Alternative)

Intersection #19 Trautwein Rd/John F. Kennedy Dr

Cycle (sec): 100 Critical Vol./Cap.(X): 0.952
Loss Time (sec): 16 (Y+R=4.0 sec) Average Delay (sec/veh): 36.5
Optimal Cycle: 130 Level Of Service: D

Street Name:	Trautwein Rd								John F. Kennedy Dr							
Approach:	North Bound				South Bound				East Bound				West Bound			
Movement:	L	-	T	- R	L	-	T	- R	L	-	T	- R	L	-	T	- R
Control:	Protected				Protected				Protected				Protected			
Rights:	Include				Ovl				Include				Include			
Min. Green:	7	7	7		7	7	7		7	7	7		7	7	7	
Lanes:	1	0	2	0 1	1	0	2	0 1	2	0	1	0 1	1	0	0	1 0
Volume Module:																
Base Vol:	105	1314	87		51	1921	678		562	71	181		63	60	28	
Growth Adj:	1.00	1.00	1.00		1.00	1.00	1.00		1.00	1.00	1.00		1.00	1.00	1.00	
Initial Bse:	105	1314	87		51	1921	678		562	71	181		63	60	28	
Added Vol:	0	0	0		0	0	0		0	0	0		0	0	0	
PasserByVol:	0	0	0		0	0	0		0	0	0		0	0	0	
Initial Fut:	105	1314	87		51	1921	678		562	71	181		63	60	28	
User Adj:	1.00	1.00	1.00		1.00	1.00	1.00		1.00	1.00	1.00		1.00	1.00	1.00	
PHF Adj:	1.00	1.00	1.00		1.00	1.00	1.00		1.00	1.00	1.00		1.00	1.00	1.00	
PHF Volume:	105	1314	87		51	1921	678		562	71	181		63	60	28	
Reduct Vol:	0	0	0		0	0	0		0	0	0		0	0	0	
Reduced Vol:	105	1314	87		51	1921	678		562	71	181		63	60	28	
PCE Adj:	1.00	1.00	1.00		1.00	1.00	1.00		1.00	1.00	1.00		1.00	1.00	1.00	
MLF Adj:	1.00	1.00	1.00		1.00	1.00	1.00		1.00	1.00	1.00		1.00	1.00	1.00	
FinalVolume:	105	1314	87		51	1921	678		562	71	181		63	60	28	
Saturation Flow Module:																
Sat/Lane:	1900	1900	1900		1900	1900	1900		1900	1900	1900		1900	1900	1900	
Adjustment:	0.95	0.95	0.85		0.95	0.95	0.85		0.92	1.00	0.85		0.95	0.95	0.95	
Lanes:	1.00	2.00	1.00		1.00	2.00	1.00		2.00	1.00	1.00		1.00	0.68	0.32	
Final Sat.:	1805	3610	1615		1805	3610	1615		3502	1900	1615		1805	1233	576	
Capacity Analysis Module:																
Vol/Sat:	0.06	0.36	0.05		0.03	0.53	0.42		0.16	0.04	0.11		0.03	0.05	0.05	
Crit Moves:	****					****			****					****		
Green/Cycle:	0.07	0.51	0.51		0.10	0.54	0.70		0.16	0.14	0.14		0.09	0.07	0.07	
Volume/Cap:	0.83	0.71	0.11		0.29	0.99	0.60		0.99	0.26	0.78		0.39	0.70	0.70	
Delay/Veh:	80.9	20.2	12.8		42.8	40.7	8.7		76.8	38.7	57.4		44.5	60.9	60.9	
User DelAdj:	1.00	1.00	1.00		1.00	1.00	1.00		1.00	1.00	1.00		1.00	1.00	1.00	
AdjDel/Veh:	80.9	20.2	12.8		42.8	40.7	8.7		76.8	38.7	57.4		44.5	60.9	60.9	
LOS by Move:	F	C	B		D	D	A		E	D	E		D	E	E	
HCM2kAvgQ:	5	17	1		2	38	11		14	2	7		2	4	4	

Note: Queue reported is the number of cars per lane.

Traffix 7.9.0415 (c) 2007 Dowling Assoc. Licensed to MMA, LONG BEACH, CA

Overlook Parkway Extension
Future Alt 2 (Gates Opened - No Overlook)
PM Peak Hour

Level Of Service Computation Report
2000 HCM Operations Method (Future Volume Alternative)

Intersection #20 Washington St/Bradley St

Cycle (sec): 100 | Critical Vol./Cap.(X): 1.005
Loss Time (sec): 12 (Y+R=4.0 sec) | Average Delay (sec/veh): 52.6
Optimal Cycle: 130 | Level Of Service: D

Street Name:	Washington St						Bradley St					
Approach:	North Bound			South Bound			East Bound			West Bound		
Movement:	L - T - R			L - T - R			L - T - R			L - T - R		
Control:	Protected			Protected			Permitted			Permitted		
Rights:	Include			Include			Include			Include		
Min. Green:	7	7	7	7	7	7	7	7	7	7	7	7
Lanes:	1 0	1 1	0	1 0	1 1	0	0 0	1! 0	0	0 0	1! 0	0
Volume Module:												
Base Vol:	211	1325	46	246	1626	3	12	71	445	28	43	109
Growth Adj:	1.00	1.00	1.00	1.00	1.00	1.00	1.00	1.00	1.00	1.00	1.00	1.00
Initial Bse:	211	1325	46	246	1626	3	12	71	445	28	43	109
Added Vol:	0	0	0	0	0	0	0	0	0	0	0	0
PasserByVol:	0	0	0	0	0	0	0	0	0	0	0	0
Initial Fut:	211	1325	46	246	1626	3	12	71	445	28	43	109
User Adj:	1.00	1.00	1.00	1.00	1.00	1.00	1.00	1.00	1.00	1.00	1.00	1.00
PHF Adj:	1.00	1.00	1.00	1.00	1.00	1.00	1.00	1.00	1.00	1.00	1.00	1.00
PHF Volume:	211	1325	46	246	1626	3	12	71	445	28	43	109
Reduct Vol:	0	0	0	0	0	0	0	0	0	0	0	0
Reduced Vol:	211	1325	46	246	1626	3	12	71	445	28	43	109
PCE Adj:	1.00	1.00	1.00	1.00	1.00	1.00	1.00	1.00	1.00	1.00	1.00	1.00
MLF Adj:	1.00	1.00	1.00	1.00	1.00	1.00	1.00	1.00	1.00	1.00	1.00	1.00
FinalVolume:	211	1325	46	246	1626	3	12	71	445	28	43	109
Saturation Flow Module:												
Sat/Lane:	1900	1900	1900	1900	1900	1900	1900	1900	1900	1900	1900	1900
Adjustment:	0.95	0.95	0.95	0.95	0.95	0.95	0.88	0.88	0.88	0.75	0.75	0.75
Lanes:	1.00	1.93	0.07	1.00	1.99	0.01	0.02	0.13	0.85	0.16	0.24	0.60
Final Sat.:	1805	3471	121	1805	3603	7	38	225	1409	221	340	862
Capacity Analysis Module:												
Vol/Sat:	0.12	0.38	0.38	0.14	0.45	0.45	0.32	0.32	0.32	0.13	0.13	0.13
Crit Moves:	****				****			****				
Green/Cycle:	0.12	0.42	0.42	0.15	0.45	0.45	0.31	0.31	0.31	0.31	0.31	0.31
Volume/Cap:	1.00	0.92	0.92	0.92	1.00	1.00	1.00	1.00	1.00	0.40	0.40	0.40
Delay/Veh:	107.5	36.6	36.6	75.4	51.0	51.0	74.7	74.7	74.7	27.5	27.5	27.5
User DelAdj:	1.00	1.00	1.00	1.00	1.00	1.00	1.00	1.00	1.00	1.00	1.00	1.00
AdjDel/Veh:	107.5	36.6	36.6	75.4	51.0	51.0	74.7	74.7	74.7	27.5	27.5	27.5
LOS by Move:	F	D	D	E	D	D	E	E	E	C	C	C
HCM2kAvgQ:	11	25	25	11	34	34	23	23	23	5	5	5

Note: Queue reported is the number of cars per lane.

Traffix 7.9.0415 (c) 2007 Dowling Assoc. Licensed to MMA, LONG BEACH, CA

Overlook Parkway Extension
Future Alt 2 (Gates Opened - No Overlook)
PM Peak Hour

Level Of Service Computation Report
2000 HCM Operations Method (Future Volume Alternative)

Intersection #21 Alessandro Blvd/Via Vista Dr

Cycle (sec): 100 | Critical Vol./Cap.(X): 0.960
Loss Time (sec): 16 (Y+R=4.0 sec) | Average Delay (sec/veh): 42.7
Optimal Cycle: 130 | Level Of Service: D

Street Name:	Alessandro Blvd						Via Vista Dr					
Approach:	North Bound			South Bound			East Bound			West Bound		
Movement:	L - T - R			L - T - R			L - T - R			L - T - R		
Control:	Protected			Protected			Protected			Protected		
Rights:	Include			Include			Include			Include		
Min. Green:	7	7	7	7	7	7	7	7	7	7	7	7
Lanes:	1 0	2 1	0	1 0	2 1	0	1 0	1 0	1	1 0	1 0	1
Volume Module:												
Base Vol:	94	2085	17	104	3242	233	69	31	60	63	51	64
Growth Adj:	1.00	1.00	1.00	1.00	1.00	1.00	1.00	1.00	1.00	1.00	1.00	1.00
Initial Bse:	94	2085	17	104	3242	233	69	31	60	63	51	64
Added Vol:	0	0	0	0	0	0	0	0	0	0	0	0
PasserByVol:	0	0	0	0	0	0	0	0	0	0	0	0
Initial Fut:	94	2085	17	104	3242	233	69	31	60	63	51	64
User Adj:	1.00	1.00	1.00	1.00	1.00	1.00	1.00	1.00	1.00	1.00	1.00	1.00
PHF Adj:	1.00	1.00	1.00	1.00	1.00	1.00	1.00	1.00	1.00	1.00	1.00	1.00
PHF Volume:	94	2085	17	104	3242	233	69	31	60	63	51	64
Reduct Vol:	0	0	0	0	0	0	0	0	0	0	0	0
Reduced Vol:	94	2085	17	104	3242	233	69	31	60	63	51	64
PCE Adj:	1.00	1.00	1.00	1.00	1.00	1.00	1.00	1.00	1.00	1.00	1.00	1.00
MLF Adj:	1.00	1.00	1.00	1.00	1.00	1.00	1.00	1.00	1.00	1.00	1.00	1.00
FinalVolume:	94	2085	17	104	3242	233	69	31	60	63	51	64
Saturation Flow Module:												
Sat/Lane:	1900	1900	1900	1900	1900	1900	1900	1900	1900	1900	1900	1900
Adjustment:	0.95	0.91	0.91	0.95	0.90	0.90	0.95	1.00	0.85	0.95	1.00	0.85
Lanes:	1.00	2.98	0.02	1.00	2.80	0.20	1.00	1.00	1.00	1.00	1.00	1.00
Final Sat.:	1805	5140	42	1805	4791	344	1805	1900	1615	1805	1900	1615
Capacity Analysis Module:												
Vol/Sat:	0.05	0.41	0.41	0.06	0.68	0.68	0.04	0.02	0.04	0.03	0.03	0.04
Crit Moves:	****				****		****					****
Green/Cycle:	0.07	0.60	0.60	0.10	0.63	0.63	0.07	0.07	0.07	0.07	0.07	0.07
Volume/Cap:	0.74	0.68	0.68	0.56	1.07	1.07	0.55	0.23	0.53	0.50	0.38	0.57
Delay/Veh:	66.7	14.3	14.3	46.5	58.6	58.6	49.9	44.9	49.7	47.9	46.3	51.6
User DelAdj:	1.00	1.00	1.00	1.00	1.00	1.00	1.00	1.00	1.00	1.00	1.00	1.00
AdjDel/Veh:	66.7	14.3	14.3	46.5	58.6	58.6	49.9	44.9	49.7	47.9	46.3	51.6
LOS by Move:	E	B	B	D	E	E	D	D	D	D	D	D
HCM2kAvgQ:	5	17	17	4	55	55	3	1	3	3	2	3

Note: Queue reported is the number of cars per lane.

Traffix 7.9.0415 (c) 2007 Dowling Assoc. Licensed to MMA, LONG BEACH, CA

Overlook Parkway Extension
Future Alt 2 (Gates Opened - No Overlook)
PM Peak Hour

Level Of Service Computation Report
2000 HCM 4-Way Stop Method (Future Volume Alternative)

Intersection #23 Mary St/Hawarden Dr

Cycle (sec):	100	Critical Vol./Cap.(X):	0.463
Loss Time (sec):	0 (Y+R=4.0 sec)	Average Delay (sec/veh):	9.7
Optimal Cycle:	0	Level Of Service:	A

Street Name:	Mary St								Hawarden Dr					
Approach:	North Bound			South Bound			East Bound			West Bound				
Movement:	L	T	R	L	T	R	L	T	R	L	T	R		
Control:	Stop Sign			Stop Sign			Stop Sign			Stop Sign				
Rights:	Include			Include			Include			Include				
Min. Green:	7	7	7	7	7	7	7	7	7	7	7	7		
Lanes:	0 1	0	0 0	0	0 0	1 0	0	0 1!	0 0	0	0 0	0 0		
Volume Module:														
Base Vol:	5	73	0	0	275	150	42	0	7	0	0	0		
Growth Adj:	1.00	1.00	1.00	1.00	1.00	1.00	1.00	1.00	1.00	1.00	1.00	1.00		
Initial Bse:	5	73	0	0	275	150	42	0	7	0	0	0		
Added Vol:	0	0	0	0	0	0	0	0	0	0	0	0		
PasserByVol:	0	0	0	0	0	0	0	0	0	0	0	0		
Initial Fut:	5	73	0	0	275	150	42	0	7	0	0	0		
User Adj:	1.00	1.00	1.00	1.00	1.00	1.00	1.00	1.00	1.00	1.00	1.00	1.00		
PHF Adj:	1.00	1.00	1.00	1.00	1.00	1.00	1.00	1.00	1.00	1.00	1.00	1.00		
PHF Volume:	5	73	0	0	275	150	42	0	7	0	0	0		
Reduct Vol:	0	0	0	0	0	0	0	0	0	0	0	0		
Reduced Vol:	5	73	0	0	275	150	42	0	7	0	0	0		
PCE Adj:	1.00	1.00	1.00	1.00	1.00	1.00	1.00	1.00	1.00	1.00	1.00	1.00		
MLF Adj:	1.00	1.00	1.00	1.00	1.00	1.00	1.00	1.00	1.00	1.00	1.00	1.00		
FinalVolume:	5	73	0	0	275	150	42	0	7	0	0	0		
Saturation Flow Module:														
Adjustment:	1.00	1.00	1.00	1.00	1.00	1.00	1.00	1.00	1.00	1.00	1.00	1.00		
Lanes:	0.06	0.94	0.00	0.00	0.65	0.35	0.86	0.00	0.14	0.00	0.00	0.00		
Final Sat.:	51	745	0	0	594	324	574	0	96	0	0	0		
Capacity Analysis Module:														
Vol/Sat:	0.10	0.10	xxxx	xxxx	0.46	0.46	0.07	xxxx	0.07	xxxx	xxxx	xxxx		
Crit Moves:	****				****		****							
Delay/Veh:	7.9	7.9	0.0	0.0	10.2	10.2	8.3	0.0	8.3	0.0	0.0	0.0		
Delay Adj:	1.00	1.00	1.00	1.00	1.00	1.00	1.00	1.00	1.00	1.00	1.00	1.00		
AdjDel/Veh:	7.9	7.9	0.0	0.0	10.2	10.2	8.3	0.0	8.3	0.0	0.0	0.0		
LOS by Move:	A	A	*	*	B	B	A	*	A	*	*	*		
ApproachDel:	7.9				10.2		8.3			xxxxxx				
Delay Adj:	1.00				1.00		1.00			xxxxx				
ApprAdjDel:	7.9				10.2		8.3			xxxxxx				
LOS by Appr:	A				B		A			*				
AllWayAvgQ:	0.1	0.1	0.1	0.8	0.8	0.8	0.1	0.1	0.1	0.0	0.0	0.0		

Overlook Parkway Extension
Future Alt 2 (Gates Opened - No Overlook)
PM Peak Hour

Note: Queue reported is the number of cars per lane.

Overlook Parkway Extension
Future Alt 2 (Gates Opened - No Overlook)
PM Peak Hour

Level Of Service Computation Report
2000 HCM 4-Way Stop Method (Future Volume Alternative)

Intersection #24 Hawarden Dr/Overlook Pkwy

Cycle (sec):	100	Critical Vol./Cap.(X):	0.490
Loss Time (sec):	0 (Y+R=4.0 sec)	Average Delay (sec/veh):	11.6
Optimal Cycle:	0	Level Of Service:	B

Street Name:	Hawarden Dr					Overlook Pkwy					
Approach:	North Bound			South Bound			East Bound			West Bound		
Movement:	L -	T -	R	L -	T -	R	L -	T -	R	L -	T -	R
Control:	Stop Sign			Stop Sign			Stop Sign			Stop Sign		
Rights:	Include			Include			Include			Include		
Min. Green:	7	7	7	7	7	7	7	7	7	7	7	7
Lanes:	0 0	1! 0	0	0 0	1! 0	0	1 0	1 1	0	1 0	1 1	0
Volume Module:												
Base Vol:	30	13	12	69	42	30	17	619	46	2	181	15
Growth Adj:	1.00	1.00	1.00	1.00	1.00	1.00	1.00	1.00	1.00	1.00	1.00	1.00
Initial Bse:	30	13	12	69	42	30	17	619	46	2	181	15
Added Vol:	0	0	0	0	0	0	0	0	0	0	0	0
PasserByVol:	0	0	0	0	0	0	0	0	0	0	0	0
Initial Fut:	30	13	12	69	42	30	17	619	46	2	181	15
User Adj:	1.00	1.00	1.00	1.00	1.00	1.00	1.00	1.00	1.00	1.00	1.00	1.00
PHF Adj:	1.00	1.00	1.00	1.00	1.00	1.00	1.00	1.00	1.00	1.00	1.00	1.00
PHF Volume:	30	13	12	69	42	30	17	619	46	2	181	15
Reduct Vol:	0	0	0	0	0	0	0	0	0	0	0	0
Reduced Vol:	30	13	12	69	42	30	17	619	46	2	181	15
PCE Adj:	1.00	1.00	1.00	1.00	1.00	1.00	1.00	1.00	1.00	1.00	1.00	1.00
MLF Adj:	1.00	1.00	1.00	1.00	1.00	1.00	1.00	1.00	1.00	1.00	1.00	1.00
FinalVolume:	30	13	12	69	42	30	17	619	46	2	181	15
Saturation Flow Module:												
Adjustment:	1.00	1.00	1.00	1.00	1.00	1.00	1.00	1.00	1.00	1.00	1.00	1.00
Lanes:	0.54	0.24	0.22	0.49	0.30	0.21	1.00	1.86	0.14	1.00	1.85	0.15
Final Sat.:	307	133	123	290	176	126	614	1263	95	549	1112	93
Capacity Analysis Module:												
Vol/Sat:	0.10	0.10	0.10	0.24	0.24	0.24	0.03	0.49	0.49	0.00	0.16	0.16
Crit Moves:	****			****			****			****		
Delay/Veh:	9.5	9.5	9.5	10.4	10.4	10.4	8.7	12.8	12.6	9.0	9.5	9.4
Delay Adj:	1.00	1.00	1.00	1.00	1.00	1.00	1.00	1.00	1.00	1.00	1.00	1.00
AdjDel/Veh:	9.5	9.5	9.5	10.4	10.4	10.4	8.7	12.8	12.6	9.0	9.5	9.4
LOS by Move:	A	A	A	B	B	B	A	B	B	A	A	A
ApproachDel:	9.5			10.4			12.7			9.5		
Delay Adj:	1.00			1.00			1.00			1.00		
ApprAdjDel:	9.5			10.4			12.7			9.5		
LOS by Appr:	A			B			B			A		
AllWayAvgQ:	0.1	0.1	0.1	0.3	0.3	0.3	0.0	0.9	0.9	0.0	0.2	0.2

Traffix 7.9.0415 (c) 2007 Dowling Assoc. Licensed to MMA, LONG BEACH, CA

Overlook Parkway Extension
Future Alt 2 (Gates Opened - No Overlook)
PM Peak Hour

Note: Queue reported is the number of cars per lane.

Traffix 7.9.0415 (c) 2007 Dowling Assoc. Licensed to MMA, LONG BEACH, CA

Overlook Parkway Extension
Future Alt 2 (Gates Opened - No Overlook)
PM Peak Hour

Level Of Service Computation Report
2000 HCM 4-Way Stop Method (Future Volume Alternative)

Intersection #25 Crystal View Ter/Berry Rd

Cycle (sec):	100	Critical Vol./Cap.(X):	0.838
Loss Time (sec):	0 (Y+R=4.0 sec)	Average Delay (sec/veh):	20.4
Optimal Cycle:	0	Level Of Service:	C

Street Name:	Crystal View Ter								Berry Rd					
Approach:	North Bound			South Bound			East Bound			West Bound				
Movement:	L	- T	- R	L	- T	- R	L	- T	- R	L	- T	- R		
Control:	Stop Sign			Stop Sign			Stop Sign			Stop Sign				
Rights:	Include			Include			Include			Include				
Min. Green:	7	7	7	7	7	7	7	7	7	7	7	7		
Lanes:	0 0	1! 0	0	0 0	1! 0	0	0 0	1! 0	0	0 0	1! 0	0		
Volume Module:														
Base Vol:	1	38	160	467	113	3	4	0	3	128	3	144		
Growth Adj:	1.00	1.00	1.00	1.00	1.00	1.00	1.00	1.00	1.00	1.00	1.00	1.00		
Initial Bse:	1	38	160	467	113	3	4	0	3	128	3	144		
Added Vol:	0	0	0	0	0	0	0	0	0	0	0	0		
PasserByVol:	0	0	0	0	0	0	0	0	0	0	0	0		
Initial Fut:	1	38	160	467	113	3	4	0	3	128	3	144		
User Adj:	1.00	1.00	1.00	1.00	1.00	1.00	1.00	1.00	1.00	1.00	1.00	1.00		
PHF Adj:	1.00	1.00	1.00	1.00	1.00	1.00	1.00	1.00	1.00	1.00	1.00	1.00		
PHF Volume:	1	38	160	467	113	3	4	0	3	128	3	144		
Reduct Vol:	0	0	0	0	0	0	0	0	0	0	0	0		
Reduced Vol:	1	38	160	467	113	3	4	0	3	128	3	144		
PCE Adj:	1.00	1.00	1.00	1.00	1.00	1.00	1.00	1.00	1.00	1.00	1.00	1.00		
MLF Adj:	1.00	1.00	1.00	1.00	1.00	1.00	1.00	1.00	1.00	1.00	1.00	1.00		
FinalVolume:	1	38	160	467	113	3	4	0	3	128	3	144		
Saturation Flow Module:														
Adjustment:	1.00	1.00	1.00	1.00	1.00	1.00	1.00	1.00	1.00	1.00	1.00	1.00		
Lanes:	0.01	0.19	0.80	0.80	0.19	0.01	0.57	0.00	0.43	0.47	0.01	0.52		
Final Sat.:	3	130	546	557	135	4	294	0	220	282	7	317		
Capacity Analysis Module:														
Vol/Sat:	0.29	0.29	0.29	0.84	0.84	0.84	0.01	xxxx	0.01	0.45	0.45	0.45		
Crit Moves:		****		****			****				****			
Delay/Veh:	9.9	9.9	9.9	27.9	27.9	27.9	9.3	0.0	9.3	12.6	12.6	12.6		
Delay Adj:	1.00	1.00	1.00	1.00	1.00	1.00	1.00	1.00	1.00	1.00	1.00	1.00		
AdjDel/Veh:	9.9	9.9	9.9	27.9	27.9	27.9	9.3	0.0	9.3	12.6	12.6	12.6		
LOS by Move:	A	A	A	D	D	D	A	*	A	B	B	B		
ApproachDel:	9.9			27.9			9.3			12.6				
Delay Adj:	1.00			1.00			1.00			1.00				
ApprAdjDel:	9.9			27.9			9.3			12.6				
LOS by Appr:	A			D			A			B				
AllWayAvgQ:	0.4	0.4	0.4	3.8	3.8	3.8	0.0	0.0	0.0	0.7	0.7	0.7		

Overlook Parkway Extension
Future Alt 2 (Gates Opened - No Overlook)
PM Peak Hour

Note: Queue reported is the number of cars per lane.

Overlook Parkway Extension
Future Alt 2 (Gates Opened - No Overlook)
PM Peak Hour

Level Of Service Computation Report
2000 HCM 4-Way Stop Method (Future Volume Alternative)

Intersection #26 Corinthian Wy/Berry Rd

Cycle (sec): 100 | Critical Vol./Cap.(X): 0.812
Loss Time (sec): 0 (Y+R=4.0 sec) | Average Delay (sec/veh): 19.3
Optimal Cycle: 0 | Level Of Service: C

Street Name:	Corinthian Wy							Berry Rd					
Approach:	North Bound			South Bound			East Bound			West Bound			
Movement:	L	- T	- R	L	- T	- R	L	- T	- R	L	- T	- R	
Control:	Stop Sign			Stop Sign			Stop Sign			Stop Sign			
Rights:	Include			Include			Include			Include			
Min. Green:	7	7	7	7	7	7	7	7	7	7	7	7	
Lanes:	0 0	0 0	0	0 0	1! 0	0	0 1	0 0	0	0 0	0 1	0	
Volume Module:													
Base Vol:	0	0	0	42	0	220	93	525	0	0	59	1	
Growth Adj:	1.00	1.00	1.00	1.00	1.00	1.00	1.00	1.00	1.00	1.00	1.00	1.00	
Initial Bse:	0	0	0	42	0	220	93	525	0	0	59	1	
Added Vol:	0	0	0	0	0	0	0	0	0	0	0	0	
PasserByVol:	0	0	0	0	0	0	0	0	0	0	0	0	
Initial Fut:	0	0	0	42	0	220	93	525	0	0	59	1	
User Adj:	1.00	1.00	1.00	1.00	1.00	1.00	1.00	1.00	1.00	1.00	1.00	1.00	
PHF Adj:	1.00	1.00	1.00	1.00	1.00	1.00	1.00	1.00	1.00	1.00	1.00	1.00	
PHF Volume:	0	0	0	42	0	220	93	525	0	0	59	1	
Reduct Vol:	0	0	0	0	0	0	0	0	0	0	0	0	
Reduced Vol:	0	0	0	42	0	220	93	525	0	0	59	1	
PCE Adj:	1.00	1.00	1.00	1.00	1.00	1.00	1.00	1.00	1.00	1.00	1.00	1.00	
MLF Adj:	1.00	1.00	1.00	1.00	1.00	1.00	1.00	1.00	1.00	1.00	1.00	1.00	
FinalVolume:	0	0	0	42	0	220	93	525	0	0	59	1	
Saturation Flow Module:													
Adjustment:	1.00	1.00	1.00	1.00	1.00	1.00	1.00	1.00	1.00	1.00	1.00	1.00	
Lanes:	0.00	0.00	0.00	0.16	0.00	0.84	0.15	0.85	0.00	0.00	0.98	0.02	
Final Sat.:	0	0	0	108	0	564	114	646	0	0	627	11	
Capacity Analysis Module:													
Vol/Sat:	xxxx	xxxx	xxxx	0.39	xxxx	0.39	0.81	0.81	xxxx	xxxx	0.09	0.09	
Crit Moves:				****			****				****		
Delay/Veh:	0.0	0.0	0.0	10.8	0.0	10.8	23.9	23.9	0.0	0.0	8.8	8.8	
Delay Adj:	1.00	1.00	1.00	1.00	1.00	1.00	1.00	1.00	1.00	1.00	1.00	1.00	
AdjDel/Veh:	0.0	0.0	0.0	10.8	0.0	10.8	23.9	23.9	0.0	0.0	8.8	8.8	
LOS by Move:	*	*	*	B	*	B	C	C	*	*	A	A	
ApproachDel:	xxxxxx			10.8			23.9			8.8			
Delay Adj:	xxxxx			1.00			1.00			1.00			
ApprAdjDel:	xxxxxx			10.8			23.9			8.8			
LOS by Appr:	*			B			C			A			
AllWayAvgQ:	0.0	0.0	0.0	0.5	0.5	0.5	3.4	3.4	3.4	0.1	0.1	0.1	

Overlook Parkway Extension
Future Alt 2 (Gates Opened - No Overlook)
PM Peak Hour

Note: Queue reported is the number of cars per lane.

Overlook Parkway Extension
Future Alt 2 (Gates Opened - No Overlook)
PM Peak Hour

Level Of Service Computation Report
2000 HCM Unsignalized Method (Future Volume Alternative)

Intersection #28 Orozco Dr/Overlook Pkwy

Average Delay (sec/veh): 5.8 Worst Case Level Of Service: D[27.1]

Street Name:	Orozco Dr						Overlook Pkwy					
Approach:	North Bound			South Bound			East Bound			West Bound		
Movement:	L - T - R			L - T - R			L - T - R			L - T - R		
Control:	Stop Sign			Stop Sign			Uncontrolled			Uncontrolled		
Rights:	Include			Include			Include			Include		
Lanes:	0 0 1! 0 0			0 0 1! 0 0			1 0 1 1 0			1 0 1 1 0		
Volume Module:												
Base Vol:	6	1	3	210	9	12	30	643	7	0	197	33
Growth Adj:	1.00	1.00	1.00	1.00	1.00	1.00	1.00	1.00	1.00	1.00	1.00	1.00
Initial Bse:	6	1	3	210	9	12	30	643	7	0	197	33
Added Vol:	0	0	0	0	0	0	0	0	0	0	0	0
PasserByVol:	0	0	0	0	0	0	0	0	0	0	0	0
Initial Fut:	6	1	3	210	9	12	30	643	7	0	197	33
User Adj:	1.00	1.00	1.00	1.00	1.00	1.00	1.00	1.00	1.00	1.00	1.00	1.00
PHF Adj:	1.00	1.00	1.00	1.00	1.00	1.00	1.00	1.00	1.00	1.00	1.00	1.00
PHF Volume:	6	1	3	210	9	12	30	643	7	0	197	33
Reduct Vol:	0	0	0	0	0	0	0	0	0	0	0	0
FinalVolume:	6	1	3	210	9	12	30	643	7	0	197	33
Critical Gap Module:												
Critical Gp:	7.5	6.5	6.9	7.5	6.5	6.9	4.1	xxxx	xxxxx	xxxxx	xxxx	xxxxx
FollowUpTim:	3.5	4.0	3.3	3.5	4.0	3.3	2.2	xxxx	xxxxx	xxxxx	xxxx	xxxxx
Capacity Module:												
Cnflict Vol:	810	937	325	596	924	115	230	xxxx	xxxxx	xxxx	xxxx	xxxxx
Potent Cap.:	275	267	677	392	272	922	1350	xxxx	xxxxx	xxxx	xxxx	xxxxx
Move Cap.:	260	261	677	382	266	922	1350	xxxx	xxxxx	xxxx	xxxx	xxxxx
Volume/Cap:	0.02	0.00	0.00	0.55	0.03	0.01	0.02	xxxx	xxxx	xxxx	xxxx	xxxx
Level Of Service Module:												
2Way95thQ:	xxxx	xxxx	xxxxx	xxxx	xxxx	xxxxx	0.1	xxxx	xxxxx	xxxx	xxxx	xxxxx
Control Del:	xxxxx	xxxx	xxxxx	xxxxx	xxxx	xxxxx	7.7	xxxx	xxxxx	xxxxx	xxxx	xxxxx
LOS by Move:	*	*	*	*	*	*	A	*	*	*	*	*
Movement:	LT -	LTR -	RT	LT -	LTR -	RT	LT -	LTR -	RT	LT -	LTR -	RT
Shared Cap.:	xxxx	319	xxxxx	xxxx	388	xxxxx	xxxx	xxxx	xxxxx	xxxx	xxxx	xxxxx
SharedQueue:	xxxxx	0.1	xxxxx	xxxxx	3.7	xxxxx	xxxxx	xxxx	xxxxx	xxxxx	xxxx	xxxxx
Shrd ConDel:	xxxxx	16.6	xxxxx	xxxxx	27.1	xxxxx	xxxxx	xxxx	xxxxx	xxxxx	xxxx	xxxxx
Shared LOS:	*	C	*	*	D	*	*	*	*	*	*	*
ApproachDel:	16.6			27.1			xxxxxx			xxxxxx		
ApproachLOS:	C			D			*			*		

Note: Queue reported is the number of cars per lane.

Overlook Parkway Extension
Future Alt 2 (Gates Opened - No Overlook)
PM Peak Hour

Level Of Service Computation Report
2000 HCM 4-Way Stop Method (Future Volume Alternative)

Intersection #51 Madison St/Victoria Ave (North)

Cycle (sec): 100 Critical Vol./Cap.(X): 1.491
Loss Time (sec): 0 (Y+R=4.0 sec) Average Delay (sec/veh): 152.1
Optimal Cycle: 0 Level Of Service: F

Street Name:	Madison St						Victoria Ave (North)					
Approach:	North Bound			South Bound			East Bound			West Bound		
Movement:	L - T - R			L - T - R			L - T - R			L - T - R		
Control:	Stop Sign			Stop Sign			Stop Sign			Stop Sign		
Rights:	Include			Include			Include			Include		
Min. Green:	7	7	7	7	7	7	7	7	7	7	7	7
Lanes:	0 1 0 0 0			0 0 1 0 1			0 0 0 0 0			0 1 0 0 1		
Volume Module:												
Base Vol:	5	152	0	0	904	26	0	0	0	17	143	263
Growth Adj:	1.00	1.00	1.00	1.00	1.00	1.00	1.00	1.00	1.00	1.00	1.00	1.00
Initial Bse:	5	152	0	0	904	26	0	0	0	17	143	263
Added Vol:	0	0	0	0	0	0	0	0	0	0	0	0
PasserByVol:	0	0	0	0	0	0	0	0	0	0	0	0
Initial Fut:	5	152	0	0	904	26	0	0	0	17	143	263
User Adj:	1.00	1.00	1.00	1.00	1.00	1.00	1.00	1.00	1.00	1.00	1.00	1.00
PHF Adj:	1.00	1.00	1.00	1.00	1.00	1.00	1.00	1.00	1.00	1.00	1.00	1.00
PHF Volume:	5	152	0	0	904	26	0	0	0	17	143	263
Reduct Vol:	0	0	0	0	0	0	0	0	0	0	0	0
Reduced Vol:	5	152	0	0	904	26	0	0	0	17	143	263
PCE Adj:	1.00	1.00	1.00	1.00	1.00	1.00	1.00	1.00	1.00	1.00	1.00	1.00
MLF Adj:	1.00	1.00	1.00	1.00	1.00	1.00	1.00	1.00	1.00	1.00	1.00	1.00
FinalVolume:	5	152	0	0	904	26	0	0	0	17	143	263
Saturation Flow Module:												
Adjustment:	1.00	1.00	1.00	1.00	1.00	1.00	1.00	1.00	1.00	1.00	1.00	1.00
Lanes:	0.03	0.97	0.00	0.00	1.00	1.00	0.00	0.00	0.00	0.11	0.89	1.00
Final Sat.:	17	520	0	0	606	674	0	0	0	57	480	603
Capacity Analysis Module:												
Vol/Sat:	0.29	0.29	xxxx	xxxx	1.49	0.04	xxxx	xxxx	xxxx	0.30	0.30	0.44
Crit Moves:		****			****							****
Delay/Veh:	12.2	12.2	0.0	0.0	246	8.1	0.0	0.0	0.0	12.2	12.2	13.1
Delay Adj:	1.00	1.00	1.00	1.00	1.00	1.00	1.00	1.00	1.00	1.00	1.00	1.00
AdjDel/Veh:	12.2	12.2	0.0	0.0	246	8.1	0.0	0.0	0.0	12.2	12.2	13.1
LOS by Move:	B	B	*	*	F	A	*	*	*	B	B	B
ApproachDel:	12.2			239.2			xxxxxx			12.7		
Delay Adj:	1.00			1.00			xxxxx			1.00		
ApprAdjDel:	12.2			239.2			xxxxxx			12.7		
LOS by Appr:	B			F			*			B		
AllWayAvgQ:	0.4	0.4	0.4	0.0	39.9	0.0	0.0	0.0	0.0	0.4	0.4	0.7

Overlook Parkway Extension
Future Alt 2 (Gates Opened - No Overlook)
PM Peak Hour

Note: Queue reported is the number of cars per lane.

Overlook Parkway Extension
Future Alt 2 (Gates Opened - No Overlook)
PM Peak Hour

Level Of Service Computation Report
2000 HCM 4-Way Stop Method (Future Volume Alternative)

Intersection #52 Madison St/Victoria Ave (South)

Cycle (sec):	100	Critical Vol./Cap.(X):	1.331
Loss Time (sec):	0 (Y+R=4.0 sec)	Average Delay (sec/veh):	121.8
Optimal Cycle:	0	Level Of Service:	F

Street Name:	Madison St							Victoria Ave (South)					
Approach:	North Bound			South Bound				East Bound			West Bound		
Movement:	L	- T	- R	L	- T	- R		L	- T	- R	L	- T	- R
Control:	Stop Sign			Stop Sign				Stop Sign			Stop Sign		
Rights:	Include			Include				Include			Include		
Min. Green:	7	7	7	7	7	7		7	7	7	7	7	7
Lanes:	0 0	0 1	0	0 1	0 0	0		0 0	1! 0	0	0 0	0 0	0
Volume Module:													
Base Vol:	0	115	30	567	354	0		42	258	15	0	0	0
Growth Adj:	1.00	1.00	1.00	1.00	1.00	1.00		1.00	1.00	1.00	1.00	1.00	1.00
Initial Bse:	0	115	30	567	354	0		42	258	15	0	0	0
Added Vol:	0	0	0	0	0	0		0	0	0	0	0	0
PasserByVol:	0	0	0	0	0	0		0	0	0	0	0	0
Initial Fut:	0	115	30	567	354	0		42	258	15	0	0	0
User Adj:	1.00	1.00	1.00	1.00	1.00	1.00		1.00	1.00	1.00	1.00	1.00	1.00
PHF Adj:	1.00	1.00	1.00	1.00	1.00	1.00		1.00	1.00	1.00	1.00	1.00	1.00
PHF Volume:	0	115	30	567	354	0		42	258	15	0	0	0
Reduct Vol:	0	0	0	0	0	0		0	0	0	0	0	0
Reduced Vol:	0	115	30	567	354	0		42	258	15	0	0	0
PCE Adj:	1.00	1.00	1.00	1.00	1.00	1.00		1.00	1.00	1.00	1.00	1.00	1.00
MLF Adj:	1.00	1.00	1.00	1.00	1.00	1.00		1.00	1.00	1.00	1.00	1.00	1.00
FinalVolume:	0	115	30	567	354	0		42	258	15	0	0	0
Saturation Flow Module:													
Adjustment:	1.00	1.00	1.00	1.00	1.00	1.00		1.00	1.00	1.00	1.00	1.00	1.00
Lanes:	0.00	0.79	0.21	0.62	0.38	0.00		0.13	0.82	0.05	0.00	0.00	0.00
Final Sat.:	0	489	128	426	266	0		80	492	29	0	0	0
Capacity Analysis Module:													
Vol/Sat:	xxxx	0.24	0.24	1.33	1.33	xxxx		0.52	0.52	0.52	xxxx	xxxx	xxxx
Crit Moves:		****			****					****			
Delay/Veh:	0.0	10.4	10.4	175.8	176	0.0		15.2	15.2	15.2	0.0	0.0	0.0
Delay Adj:	1.00	1.00	1.00	1.00	1.00	1.00		1.00	1.00	1.00	1.00	1.00	1.00
AdjDel/Veh:	0.0	10.4	10.4	175.8	176	0.0		15.2	15.2	15.2	0.0	0.0	0.0
LOS by Move:	*	B	B	F	F	*		C	C	C	*	*	*
ApproachDel:		10.4			175.8				15.2			xxxxxx	
Delay Adj:		1.00			1.00				1.00			xxxxx	
ApprAdjDel:		10.4			175.8				15.2			xxxxxx	
LOS by Appr:		B			F				C			*	
AllWayAvgQ:	0.3	0.3	0.3	32.2	32.2	32.2		1.0	1.0	1.0	0.0	0.0	0.0

Overlook Parkway Extension
Future Alt 2 (Gates Opened - No Overlook)
PM Peak Hour

Note: Queue reported is the number of cars per lane.

Overlook Parkway Extension
Future Alt 2 (Gates Opened - No Overlook)
PM Peak Hour

Level Of Service Computation Report
2000 HCM 4-Way Stop Method (Future Volume Alternative)

Intersection #81 Washington St/Victoria Ave (North)

Cycle (sec):	100	Critical Vol./Cap.(X):	1.483
Loss Time (sec):	0 (Y+R=4.0 sec)	Average Delay (sec/veh):	155.3
Optimal Cycle:	0	Level Of Service:	F

Street Name:	Washington St						Victoria Ave (North)					
Approach:	North Bound			South Bound			East Bound			West Bound		
Movement:	L	T	R	L	T	R	L	T	R	L	T	R
Control:	Stop Sign			Stop Sign			Stop Sign			Stop Sign		
Rights:	Include			Include			Include			Include		
Min. Green:	7	7	7	7	7	7	7	7	7	7	7	7
Lanes:	0 1	1 0	0	0 0	0 1	0	0 0	0 0	0	1 0	0 1	0
Volume Module:												
Base Vol:	306	553	0	0	679	3	0	0	0	668	103	9
Growth Adj:	1.00	1.00	1.00	1.00	1.00	1.00	1.00	1.00	1.00	1.00	1.00	1.00
Initial Bse:	306	553	0	0	679	3	0	0	0	668	103	9
Added Vol:	0	0	0	0	0	0	0	0	0	0	0	0
PasserByVol:	0	0	0	0	0	0	0	0	0	0	0	0
Initial Fut:	306	553	0	0	679	3	0	0	0	668	103	9
User Adj:	1.00	1.00	1.00	1.00	1.00	1.00	1.00	1.00	1.00	1.00	1.00	1.00
PHF Adj:	1.00	1.00	1.00	1.00	1.00	1.00	1.00	1.00	1.00	1.00	1.00	1.00
PHF Volume:	306	553	0	0	679	3	0	0	0	668	103	9
Reduct Vol:	0	0	0	0	0	0	0	0	0	0	0	0
Reduced Vol:	306	553	0	0	679	3	0	0	0	668	103	9
PCE Adj:	1.00	1.00	1.00	1.00	1.00	1.00	1.00	1.00	1.00	1.00	1.00	1.00
MLF Adj:	1.00	1.00	1.00	1.00	1.00	1.00	1.00	1.00	1.00	1.00	1.00	1.00
FinalVolume:	306	553	0	0	679	3	0	0	0	668	103	9
Saturation Flow Module:												
Adjustment:	1.00	1.00	1.00	1.00	1.00	1.00	1.00	1.00	1.00	1.00	1.00	1.00
Lanes:	0.71	1.29	0.00	0.00	0.99	0.01	0.00	0.00	0.00	1.00	0.92	0.08
Final Sat.:	327	613	0	0	481	2	0	0	0	451	444	39
Capacity Analysis Module:												
Vol/Sat:	0.94	0.90	xxxx	xxxx	1.41	1.41	xxxx	xxxx	xxxx	1.48	0.23	0.23
Crit Moves:	****				****					****		
Delay/Veh:	55.4	48.2	0.0	0.0	217	217.4	0.0	0.0	0.0	250.2	12.4	12.4
Delay Adj:	1.00	1.00	1.00	1.00	1.00	1.00	1.00	1.00	1.00	1.00	1.00	1.00
AdjDel/Veh:	55.4	48.2	0.0	0.0	217	217.4	0.0	0.0	0.0	250.2	12.4	12.4
LOS by Move:	F	E	*	*	F	F	*	*	*	F	B	B
ApproachDel:	50.7			217.4			xxxxxx			216.1		
Delay Adj:	1.00			1.00			xxxxx			1.00		
ApprAdjDel:	50.7			217.4			xxxxxx			216.1		
LOS by Appr:	F			F			*			F		
AllWayAvgQ:	5.7	4.8	0.0	27.8	27.8	27.8	0.0	0.0	0.0	30.0	0.3	0.3

Overlook Parkway Extension
Future Alt 2 (Gates Opened - No Overlook)
PM Peak Hour

Note: Queue reported is the number of cars per lane.

Overlook Parkway Extension
Future Alt 2 (Gates Opened - No Overlook)
PM Peak Hour

Level Of Service Computation Report
2000 HCM 4-Way Stop Method (Future Volume Alternative)

Intersection #82 Washington St/Victoria Ave (South)

Cycle (sec):	100	Critical Vol./Cap.(X):	2.789
Loss Time (sec):	0 (Y+R=4.0 sec)	Average Delay (sec/veh):	386.2
Optimal Cycle:	0	Level Of Service:	F

Street Name:	Washington St								Victoria Ave (South)					
Approach:	North Bound			South Bound			East Bound			West Bound		
Movement:	L	- T	- R	L	- T	- R	L	- T	- R	L	- T	- R
Control:	Stop Sign			Stop Sign			Stop Sign			Stop Sign		
Rights:	Include			Include			Include			Include		
Min. Green:	7	7	7	7	7	7	7	7	7	7	7	7
Lanes:	0 0	2 0	1	0 1	0 0	0	0 1	0 0	1	0 0	0 0	0
Volume Module:												
Base Vol:	0	856	408	1	1346	0	3	139	695	0	0	0
Growth Adj:	1.00	1.00	1.00	1.00	1.00	1.00	1.00	1.00	1.00	1.00	1.00	1.00
Initial Bse:	0	856	408	1	1346	0	3	139	695	0	0	0
Added Vol:	0	0	0	0	0	0	0	0	0	0	0	0
PasserByVol:	0	0	0	0	0	0	0	0	0	0	0	0
Initial Fut:	0	856	408	1	1346	0	3	139	695	0	0	0
User Adj:	1.00	1.00	1.00	1.00	1.00	1.00	1.00	1.00	1.00	1.00	1.00	1.00
PHF Adj:	1.00	1.00	1.00	1.00	1.00	1.00	1.00	1.00	1.00	1.00	1.00	1.00
PHF Volume:	0	856	408	1	1346	0	3	139	695	0	0	0
Reduct Vol:	0	0	0	0	0	0	0	0	0	0	0	0
Reduced Vol:	0	856	408	1	1346	0	3	139	695	0	0	0
PCE Adj:	1.00	1.00	1.00	1.00	1.00	1.00	1.00	1.00	1.00	1.00	1.00	1.00
MLF Adj:	1.00	1.00	1.00	1.00	1.00	1.00	1.00	1.00	1.00	1.00	1.00	1.00
FinalVolume:	0	856	408	1	1346	0	3	139	695	0	0	0
Saturation Flow Module:												
Adjustment:	1.00	1.00	1.00	1.00	1.00	1.00	1.00	1.00	1.00	1.00	1.00	1.00
Lanes:	0.00	2.00	1.00	0.01	0.99	0.00	0.02	0.98	1.00	0.00	0.00	0.00
Final Sat.:	0	959	529	0	483	0	9	424	476	0	0	0
Capacity Analysis Module:												
Vol/Sat:	xxxx	0.89	0.77	2.79	2.79	xxxx	0.33	0.33	1.46	xxxx	xxxx	xxxx
Crit Moves:		****			****				****			
Delay/Veh:	0.0	46.0	28.8	825.7	826	0.0	14.9	14.9	239.3	0.0	0.0	0.0
Delay Adj:	1.00	1.00	1.00	1.00	1.00	1.00	1.00	1.00	1.00	1.00	1.00	1.00
AdjDel/Veh:	0.0	46.0	28.8	825.7	826	0.0	14.9	14.9	239.3	0.0	0.0	0.0
LOS by Move:	*	E	D	F	F	*	B	B	F	*	*	*
ApproachDel:		40.5			825.7			201.3			xxxxxx	
Delay Adj:		1.00			1.00			1.00			xxxxx	
ApprAdjDel:		40.5			825.7			201.3			xxxxxx	
LOS by Appr:		E			F			F			*	
AllWayAvgQ:	0.0	4.8	2.8	109	109	109.4	0.5	0.5	30.3	0.0	0.0	0.0

Overlook Parkway Extension
Future Alt 2 (Gates Opened - No Overlook)
PM Peak Hour

Note: Queue reported is the number of cars per lane.

Overlook Parkway Extension
Future Alt 2 (Gates Opened - No Overlook)
PM Peak Hour

Level Of Service Computation Report
2000 HCM 4-Way Stop Method (Future Volume Alternative)

Intersection #221 Mary St/Victoria Ave (North)

Cycle (sec):	100	Critical Vol./Cap.(X):	1.281
Loss Time (sec):	0 (Y+R=4.0 sec)	Average Delay (sec/veh):	96.2
Optimal Cycle:	0	Level Of Service:	F

Street Name:	Mary St							Victoria Ave (North)					
Approach:	North Bound			South Bound			East Bound			West Bound			
Movement:	L	- T	- R	L	- T	- R	L	- T	- R	L	- T	- R	
Control:	Stop Sign			Stop Sign			Stop Sign			Stop Sign			
Rights:	Include			Include			Include			Include			
Min. Green:	7	7	7	7	7	7	7	7	7	7	7	7	
Lanes:	0 1	0	0 0	0	0 1	0 1	0	0	0 0 0	0	0 1!	0 0	
Volume Module:													
Base Vol:	17	507	0	0	619	475	0	0	0	173	318	96	
Growth Adj:	1.00	1.00	1.00	1.00	1.00	1.00	1.00	1.00	1.00	1.00	1.00	1.00	
Initial Bse:	17	507	0	0	619	475	0	0	0	173	318	96	
Added Vol:	0	0	0	0	0	0	0	0	0	0	0	0	
PasserByVol:	0	0	0	0	0	0	0	0	0	0	0	0	
Initial Fut:	17	507	0	0	619	475	0	0	0	173	318	96	
User Adj:	1.00	1.00	1.00	1.00	1.00	1.00	1.00	1.00	1.00	1.00	1.00	1.00	
PHF Adj:	1.00	1.00	1.00	1.00	1.00	1.00	1.00	1.00	1.00	1.00	1.00	1.00	
PHF Volume:	17	507	0	0	619	475	0	0	0	173	318	96	
Reduct Vol:	0	0	0	0	0	0	0	0	0	0	0	0	
Reduced Vol:	17	507	0	0	619	475	0	0	0	173	318	96	
PCE Adj:	1.00	1.00	1.00	1.00	1.00	1.00	1.00	1.00	1.00	1.00	1.00	1.00	
MLF Adj:	1.00	1.00	1.00	1.00	1.00	1.00	1.00	1.00	1.00	1.00	1.00	1.00	
FinalVolume:	17	507	0	0	619	475	0	0	0	173	318	96	
Saturation Flow Module:													
Adjustment:	1.00	1.00	1.00	1.00	1.00	1.00	1.00	1.00	1.00	1.00	1.00	1.00	
Lanes:	0.03	0.97	0.00	0.00	1.00	1.00	0.00	0.00	0.00	0.29	0.55	0.16	
Final Sat.:	17	501	0	0	483	534	0	0	0	158	290	88	
Capacity Analysis Module:													
Vol/Sat:	1.01	1.01	xxxx	xxxx	1.28	0.89	xxxx	xxxx	xxxx	1.10	1.10	1.10	
Crit Moves:		****			****						****		
Delay/Veh:	69.1	69.1	0.0	0.0	164	42.2	0.0	0.0	0.0	92.5	92.5	92.5	
Delay Adj:	1.00	1.00	1.00	1.00	1.00	1.00	1.00	1.00	1.00	1.00	1.00	1.00	
AdjDel/Veh:	69.1	69.1	0.0	0.0	164	42.2	0.0	0.0	0.0	92.5	92.5	92.5	
LOS by Move:	F	F	*	*	F	E	*	*	*	F	F	F	
ApproachDel:	69.1			111.1			xxxxxx			92.5			
Delay Adj:	1.00			1.00			xxxxx			1.00			
ApprAdjDel:	69.1			111.1			xxxxxx			92.5			
LOS by Appr:	F			F			*			F			
AllWayAvgQ:	8.5	8.5	8.5	0.0	20.6	4.9	0.0	0.0	0.0	12.3	12.3	12.3	

Overlook Parkway Extension
Future Alt 2 (Gates Opened - No Overlook)
PM Peak Hour

Note: Queue reported is the number of cars per lane.

Overlook Parkway Extension
Future Alt 2 (Gates Opened - No Overlook)
PM Peak Hour

Level Of Service Computation Report
2000 HCM 4-Way Stop Method (Future Volume Alternative)

Intersection #222 Mary St/Victoria Ave (South)

Cycle (sec):	100	Critical Vol./Cap.(X):	1.334
Loss Time (sec):	0 (Y+R=4.0 sec)	Average Delay (sec/veh):	94.1
Optimal Cycle:	0	Level Of Service:	F

Street Name:	Mary St							Victoria Ave (South)					
Approach:	North Bound			South Bound			East Bound			West Bound			
Movement:	L	- T	- R	L	- T	- R	L	- T	- R	L	- T	- R	
Control:	Stop Sign			Stop Sign			Stop Sign			Stop Sign			
Rights:	Include			Include			Include			Include			
Min. Green:	7	7	7	7	7	7	7	7	7	7	7	7	
Lanes:	0 0	0 1	0	0 1	0 0	0	1 0	0 1	0	0 0	0 0	0	
Volume Module:													
Base Vol:	0	305	64	121	671	0	219	280	43	0	0	0	
Growth Adj:	1.00	1.00	1.00	1.00	1.00	1.00	1.00	1.00	1.00	1.00	1.00	1.00	
Initial Bse:	0	305	64	121	671	0	219	280	43	0	0	0	
Added Vol:	0	0	0	0	0	0	0	0	0	0	0	0	
PasserByVol:	0	0	0	0	0	0	0	0	0	0	0	0	
Initial Fut:	0	305	64	121	671	0	219	280	43	0	0	0	
User Adj:	1.00	1.00	1.00	1.00	1.00	1.00	1.00	1.00	1.00	1.00	1.00	1.00	
PHF Adj:	1.00	1.00	1.00	1.00	1.00	1.00	1.00	1.00	1.00	1.00	1.00	1.00	
PHF Volume:	0	305	64	121	671	0	219	280	43	0	0	0	
Reduct Vol:	0	0	0	0	0	0	0	0	0	0	0	0	
Reduced Vol:	0	305	64	121	671	0	219	280	43	0	0	0	
PCE Adj:	1.00	1.00	1.00	1.00	1.00	1.00	1.00	1.00	1.00	1.00	1.00	1.00	
MLF Adj:	1.00	1.00	1.00	1.00	1.00	1.00	1.00	1.00	1.00	1.00	1.00	1.00	
FinalVolume:	0	305	64	121	671	0	219	280	43	0	0	0	
Saturation Flow Module:													
Adjustment:	1.00	1.00	1.00	1.00	1.00	1.00	1.00	1.00	1.00	1.00	1.00	1.00	
Lanes:	0.00	0.83	0.17	0.15	0.85	0.00	1.00	0.87	0.13	0.00	0.00	0.00	
Final Sat.:	0	469	98	91	503	0	479	450	69	0	0	0	
Capacity Analysis Module:													
Vol/Sat:	xxxx	0.65	0.65	1.33	1.33	xxxx	0.46	0.62	0.62	xxxx	xxxx	xxxx	
Crit Moves:		****			****			****					
Delay/Veh:	0.0	20.0	20.0	180.4	180	0.0	16.2	20.0	20.0	0.0	0.0	0.0	
Delay Adj:	1.00	1.00	1.00	1.00	1.00	1.00	1.00	1.00	1.00	1.00	1.00	1.00	
AdjDel/Veh:	0.0	20.0	20.0	180.4	180	0.0	16.2	20.0	20.0	0.0	0.0	0.0	
LOS by Move:	*	C	C	F	F	*	C	C	C	*	*	*	
ApproachDel:		20.0			180.4			18.5			xxxxxx		
Delay Adj:		1.00			1.00			1.00			xxxxx		
ApprAdjDel:		20.0			180.4			18.5			xxxxxx		
LOS by Appr:		C			F			C			*		
AllWayAvgQ:	1.7	1.7	1.7	28.3	28.3	28.3	0.8	1.5	1.5	0.0	0.0	0.0	

Overlook Parkway Extension
Future Alt 2 (Gates Opened - No Overlook)
PM Peak Hour

Note: Queue reported is the number of cars per lane.

Overlook Parkway Extension
Future Alt 3 (Gates Opened - With Overlook)
AM Peak Hour

Scenario Report

Scenario:	Future Alt 3 AM
Command:	Future Alt 3 AM
Volume:	Future Alt 3 AM
Geometry:	Future
Impact Fee:	Default Impact Fee
Trip Generation:	none
Trip Distribution:	none
Paths:	Default Path
Routes:	Default Route
Configuration:	Future Alt 3 AM

Overlook Parkway Extension
Future Alt 3 (Gates Opened - With Overlook)
AM Peak Hour

Impact Analysis Report
Level Of Service

Intersection	Base LOS	Base Del/Veh	Base V/C	Future LOS	Future Del/Veh	Future V/C	Change in
# 1 Madison St/SR-91 WB Ramps	D	35.1	0.828	D	35.1	0.828	+ 0.000 D/V
# 2 Madison St/SR-91 EB Ramps	D	39.8	0.825	D	39.8	0.825	+ 0.000 D/V
# 3 Madison St/Indiana Ave	F	135.4	1.366	F	135.4	1.366	+ 0.000 D/V
# 4 Madison St/Lincoln Ave	C	30.9	0.491	C	30.9	0.491	+ 0.000 D/V
# 6 Washington St/Indiana Ave	D	42.1	0.951	D	42.1	0.951	+ 0.000 D/V
# 7 Washington St/Lincoln Ave	F	257.5	2.069	F	257.5	2.069	+ 0.000 V/C
# 9 Washington St/Overlook Pkwy	F	109.4	1.197	F	109.4	1.197	+ 0.000 D/V
# 10 Riverside Ave-SR-91 WB/Arlingt	D	37.9	0.973	D	37.9	0.973	+ 0.000 D/V
# 11 Indiana Ave-SR-91 EB/Arlington	C	29.6	0.800	C	29.6	0.800	+ 0.000 D/V
# 12 Victoria Ave/Arlington Ave	F	88.9	1.180	F	88.9	1.180	+ 0.000 D/V
# 13 Alessandro Blvd/Arlington Ave	D	53.0	1.002	D	53.0	1.002	+ 0.000 D/V
# 14 Alessandro Blvd/Overlook Pkwy	F	130.3	1.423	F	130.3	1.423	+ 0.000 D/V
# 15 Alessandro Blvd/Trautwein Rd	E	66.3	1.002	E	66.3	1.002	+ 0.000 D/V
# 16 Crystal View Ter/Overlook Pkwy	C	15.1	0.602	C	15.1	0.602	+ 0.000 V/C
# 17 Kingdom Dr/Overlook Pkwy	D	34.4	0.000	D	34.4	0.000	+ 0.000 D/V
# 18 Kingdom Dr/Green Orchard Pl	A	9.3	0.000	A	9.3	0.000	+ 0.000 D/V
# 19 Trautwein Rd/John F. Kennedy D	F	87.1	1.104	F	87.1	1.104	+ 0.000 D/V
# 20 Washington St/Bradley St	C	27.8	0.812	C	27.8	0.812	+ 0.000 D/V
# 21 Alessandro Blvd/Via Vista Dr	C	29.9	0.880	C	29.9	0.880	+ 0.000 D/V
# 23 Mary St/Hawarden Dr	A	8.5	0.274	A	8.5	0.274	+ 0.000 V/C
# 24 Hawarden Dr/Overlook Pkwy	C	15.0	0.627	C	15.0	0.627	+ 0.000 V/C
# 25 Crystal View Ter/Berry Rd	A	8.0	0.290	A	8.0	0.290	+ 0.000 V/C
# 26 Corinthian Wy/Berry Rd	A	8.3	0.276	A	8.3	0.276	+ 0.000 V/C

Traffix 7.9.0415 (c) 2007 Dowling Assoc. Licensed to MMA, LONG BEACH, CA

Overlook Parkway Extension
Future Alt 3 (Gates Opened - With Overlook)
AM Peak Hour

Intersection	Base LOS	Base Del/Veh	Base V/C	Future LOS	Future Del/Veh	Future V/C	Change in
# 28 Orozco Dr/Overlook Pkwy	D	32.9	0.000	D	32.9	0.000	+ 0.000 D/V
# 51 Madison St/Victoria Ave (North	C	16.3	0.657	C	16.3	0.657	+ 0.000 V/C
# 52 Madison St/Victoria Ave (South	B	12.1	0.492	B	12.1	0.492	+ 0.000 V/C
# 81 Washington St/Victoria Ave (No	F	160.7	1.506	F	160.7	1.506	+ 0.000 V/C
# 82 Washington St/Victoria Ave (So	F	190.5	1.530	F	190.5	1.530	+ 0.000 V/C
#221 Mary St/Victoria Ave (North)	F	160.3	1.563	F	160.3	1.563	+ 0.000 V/C
#222 Mary St/Victoria Ave (South)	F	59.0	1.143	F	59.0	1.143	+ 0.000 V/C

Traffix 7.9.0415 (c) 2007 Dowling Assoc. Licensed to MMA, LONG BEACH, CA

Overlook Parkway Extension
Future Alt 3 (Gates Opened - With Overlook)
AM Peak Hour

Level Of Service Computation Report
2000 HCM Operations Method (Future Volume Alternative)

Intersection #1 Madison St/SR-91 WB Ramps

Cycle (sec):	100	Critical Vol./Cap.(X):	0.828
Loss Time (sec):	12 (Y+R=4.0 sec)	Average Delay (sec/veh):	35.1
Optimal Cycle:	84	Level Of Service:	D

Street Name:	Madison St								SR-91 WB Ramps								
Approach:	North Bound				South Bound				East Bound				West Bound				
Movement:	L	-	T	-	R	L	-	T	-	R	L	-	T	-	R	L	-	T	-	R
Control:	Protected					Protected					Split Phase					Split Phase				
Rights:	Include					Include					Include					Include				
Min. Green:	7	7	7			7	7	7			7	7	7			7	7	7		
Lanes:	1	0	2	0	0	0	0	3	0	1	0	0	0	0	0	0	1	0	0	1
Volume Module:																				
Base Vol:	559	1077		0		0	696		180		0		0		0	480		4		197
Growth Adj:	1.00	1.00		1.00		1.00	1.00		1.00		1.00		1.00		1.00	1.00		1.00		1.00
Initial Bse:	559	1077		0		0	696		180		0		0		0	480		4		197
Added Vol:	0	0		0		0	0		0		0		0		0	0		0		0
PasserByVol:	0	0		0		0	0		0		0		0		0	0		0		0
Initial Fut:	559	1077		0		0	696		180		0		0		0	480		4		197
User Adj:	1.00	1.00		1.00		1.00	1.00		1.00		1.00		1.00		1.00	1.00		1.00		1.00
PHF Adj:	1.00	1.00		1.00		1.00	1.00		1.00		1.00		1.00		1.00	1.00		1.00		1.00
PHF Volume:	559	1077		0		0	696		180		0		0		0	480		4		197
Reduct Vol:	0	0		0		0	0		0		0		0		0	0		0		0
Reduced Vol:	559	1077		0		0	696		180		0		0		0	480		4		197
PCE Adj:	1.00	1.00		1.00		1.00	1.00		1.00		1.00		1.00		1.00	1.00		1.00		1.00
MLF Adj:	1.00	1.00		1.00		1.00	1.00		1.00		1.00		1.00		1.00	1.00		1.00		1.00
FinalVolume:	559	1077		0		0	696		180		0		0		0	480		4		197
Saturation Flow Module:																				
Sat/Lane:	1900	1900	1900	1900		1900	1900		1900		1900	1900	1900		1900	1900	1900	1900		
Adjustment:	0.95	0.95	1.00	1.00		0.91	0.85		1.00		1.00	1.00	1.00		1.00	0.89	0.89	0.85		
Lanes:	1.00	2.00	0.00	0.00		3.00	1.00		0.00		0.00	0.00	0.00		0.00	0.99	0.01	1.00		
Final Sat.:	1805	3610		0		0	5187		1615		0		0		0	1685		14		1615
Capacity Analysis Module:																				
Vol/Sat:	0.31	0.30	0.00	0.00		0.13	0.11		0.00		0.00	0.00	0.00		0.00	0.28	0.28	0.12		
Crit Moves:	****					****										****				
Green/Cycle:	0.37	0.43	0.00	0.00		0.16	0.16		0.00		0.00	0.00	0.00		0.00	0.34	0.34	0.34		
Volume/Cap:	0.83	0.69	0.00	0.00		0.83	0.69		0.00		0.00	0.00	0.00		0.00	0.83	0.83	0.35		
Delay/Veh:	36.8	24.1	0.0	0.0		47.4	47.0		0.0		0.0	0.0	0.0		0.0	39.7	39.7	24.9		
User DelAdj:	1.00	1.00	1.00	1.00		1.00	1.00		1.00		1.00	1.00	1.00		1.00	1.00	1.00	1.00		
AdjDel/Veh:	36.8	24.1	0.0	0.0		47.4	47.0		0.0		0.0	0.0	0.0		0.0	39.7	39.7	24.9		
LOS by Move:	D	C	A	A		D	D		A		A	A	A		D	D		C		
HCM2kAvgQ:	18	15	0	0		10	7		0		0	0	0		16	16		5		

Note: Queue reported is the number of cars per lane.

Traffix 7.9.0415 (c) 2007 Dowling Assoc. Licensed to MMA, LONG BEACH, CA

Overlook Parkway Extension
Future Alt 3 (Gates Opened - With Overlook)
AM Peak Hour

Level Of Service Computation Report
2000 HCM Operations Method (Future Volume Alternative)

Intersection #2 Madison St/SR-91 EB Ramps

Cycle (sec):	100	Critical Vol./Cap.(X):	0.825
Loss Time (sec):	12 (Y+R=4.0 sec)	Average Delay (sec/veh):	39.8
Optimal Cycle:	83	Level Of Service:	D

Street Name:	Madison St								SR-91 EB Ramps								
Approach:	North Bound				South Bound				East Bound				West Bound				
Movement:	L	-	T	-	R	L	-	T	-	R	L	-	T	-	R	L	-	T	-	R
Control:	Protected					Protected					Protected					Protected				
Rights:	Include					Include					Include					Include				
Min. Green:	7	7	7			7	7	7			7	7	7			7	7	7		
Lanes:	0	0	3	0	1	1	0	2	0	0	0	1	0	0	1	0	0	0	0	0
Volume Module:																				
Base Vol:	0	1354		336		161	1049		0		310		14		703	0		0		0
Growth Adj:	1.00	1.00		1.00		1.00	1.00		1.00		1.00		1.00		1.00	1.00		1.00		1.00
Initial Bse:	0	1354		336		161	1049		0		310		14		703	0		0		0
Added Vol:	0	0		0		0	0		0		0		0		0	0		0		0
PasserByVol:	0	0		0		0	0		0		0		0		0	0		0		0
Initial Fut:	0	1354		336		161	1049		0		310		14		703	0		0		0
User Adj:	1.00	1.00		1.00		1.00	1.00		1.00		1.00		1.00		1.00	1.00		1.00		1.00
PHF Adj:	1.00	1.00		1.00		1.00	1.00		1.00		1.00		1.00		1.00	1.00		1.00		1.00
PHF Volume:	0	1354		336		161	1049		0		310		14		703	0		0		0
Reduct Vol:	0	0		0		0	0		0		0		0		0	0		0		0
Reduced Vol:	0	1354		336		161	1049		0		310		14		703	0		0		0
PCE Adj:	1.00	1.00		1.00		1.00	1.00		1.00		1.00		1.00		1.00	1.00		1.00		1.00
MLF Adj:	1.00	1.00		1.00		1.00	1.00		1.00		1.00		1.00		1.00	1.00		1.00		1.00
FinalVolume:	0	1354		336		161	1049		0		310		14		703	0		0		0
Saturation Flow Module:																				
Sat/Lane:	1900	1900	1900		1900	1900	1900		1900		1900	1900	1900		1900	1900	1900	1900		
Adjustment:	1.00	0.91	0.85		0.95	0.95	1.00		0.96		0.96	0.85	1.00		1.00	1.00		1.00		
Lanes:	0.00	3.00	1.00		1.00	2.00	0.00		0.96		0.04	1.00	0.00		0.00	0.00		0.00		
Final Sat.:	0	5187	1615		1805	3610		0	1736		78	1615		0		0		0		
Capacity Analysis Module:																				
Vol/Sat:	0.00	0.26	0.21		0.09	0.29	0.00		0.18		0.18	0.44	0.00		0.00	0.00				
Crit Moves:	****					****						****								
Green/Cycle:	0.00	0.29	0.29		0.10	0.32	0.00		0.40		0.49	0.49	0.00		0.00	0.00				
Volume/Cap:	0.00	0.89	0.71		0.89	0.90	0.00		0.45		0.37	0.90	0.00		0.00	0.00				
Delay/Veh:	0.0	40.5	36.4		81.7	41.4	0.0		22.4		16.4	36.3	0.0		0.0	0.0				
User DelAdj:	1.00	1.00	1.00		1.00	1.00	1.00		1.00		1.00	1.00	1.00		1.00	1.00				
AdjDel/Veh:	0.0	40.5	36.4		81.7	41.4	0.0		22.4		16.4	36.3	0.0		0.0	0.0				
LOS by Move:	A	D	D		F	D	A		C		B	D	A		A	A				
HCM2kAvgQ:	0	18	10		8	20	0		7		6	23	0		0	0				

Note: Queue reported is the number of cars per lane.

Traffix 7.9.0415 (c) 2007 Dowling Assoc. Licensed to MMA, LONG BEACH, CA

Overlook Parkway Extension
Future Alt 3 (Gates Opened - With Overlook)
AM Peak Hour

Level Of Service Computation Report
2000 HCM Operations Method (Future Volume Alternative)

Intersection #3 Madison St/Indiana Ave

Cycle (sec):	100	Critical Vol./Cap.(X):	1.366
Loss Time (sec):	16 (Y+R=4.0 sec)	Average Delay (sec/veh):	135.4
Optimal Cycle:	130	Level Of Service:	F

Street Name:	Madison St						Indiana Ave					
Approach:	North Bound			South Bound			East Bound			West Bound		
Movement:	L -	T -	R	L -	T -	R	L -	T -	R	L -	T -	R
Control:	Protected			Protected			Protected			Protected		
Rights:	Include			Include			Include			Include		
Min. Green:	7	7	7	7	7	7	7	7	7	7	7	7
Lanes:	1 0	1 1	0	1 0	1 1	0	1 0	1 1	0	1 0	1 1	0
Volume Module:												
Base Vol:	72	821	41	731	480	393	226	640	26	13	273	610
Growth Adj:	1.00	1.00	1.00	1.00	1.00	1.00	1.00	1.00	1.00	1.00	1.00	1.00
Initial Bse:	72	821	41	731	480	393	226	640	26	13	273	610
Added Vol:	0	0	0	0	0	0	0	0	0	0	0	0
PasserByVol:	0	0	0	0	0	0	0	0	0	0	0	0
Initial Fut:	72	821	41	731	480	393	226	640	26	13	273	610
User Adj:	1.00	1.00	1.00	1.00	1.00	1.00	1.00	1.00	1.00	1.00	1.00	1.00
PHF Adj:	1.00	1.00	1.00	1.00	1.00	1.00	1.00	1.00	1.00	1.00	1.00	1.00
PHF Volume:	72	821	41	731	480	393	226	640	26	13	273	610
Reduct Vol:	0	0	0	0	0	0	0	0	0	0	0	0
Reduced Vol:	72	821	41	731	480	393	226	640	26	13	273	610
PCE Adj:	1.00	1.00	1.00	1.00	1.00	1.00	1.00	1.00	1.00	1.00	1.00	1.00
MLF Adj:	1.00	1.00	1.00	1.00	1.00	1.00	1.00	1.00	1.00	1.00	1.00	1.00
FinalVolume:	72	821	41	731	480	393	226	640	26	13	273	610
Saturation Flow Module:												
Sat/Lane:	1900	1900	1900	1900	1900	1900	1900	1900	1900	1900	1900	1900
Adjustment:	0.95	0.94	0.94	0.95	0.89	0.89	0.95	0.94	0.94	0.95	0.85	0.85
Lanes:	1.00	1.90	0.10	1.00	1.10	0.90	1.00	1.92	0.08	1.00	1.00	1.00
Final Sat.:	1805	3414	171	1805	1852	1516	1805	3448	140	1805	1617	1617
Capacity Analysis Module:												
Vol/Sat:	0.04	0.24	0.24	0.40	0.26	0.26	0.13	0.19	0.19	0.01	0.17	0.38
Crit Moves:		****		****			****					****
Green/Cycle:	0.10	0.18	0.18	0.30	0.37	0.37	0.09	0.27	0.27	0.10	0.28	0.28
Volume/Cap:	0.40	1.37	1.37	1.37	0.70	0.70	1.37	0.70	0.70	0.07	0.61	1.37
Delay/Veh:	43.6	216	216.1	211.8	28.4	28.4	244.0	35.2	35.2	40.9	32.3	210.9
User DelAdj:	1.00	1.00	1.00	1.00	1.00	1.00	1.00	1.00	1.00	1.00	1.00	1.00
AdjDel/Veh:	43.6	216	216.1	211.8	28.4	28.4	244.0	35.2	35.2	40.9	32.3	210.9
LOS by Move:	D	F	F	F	C	C	F	D	D	D	C	F
HCM2kAvgQ:	3	31	31	48	13	13	17	11	11	0	8	43

Note: Queue reported is the number of cars per lane.

Traffix 7.9.0415 (c) 2007 Dowling Assoc. Licensed to MMA, LONG BEACH, CA

Overlook Parkway Extension
Future Alt 3 (Gates Opened - With Overlook)
AM Peak Hour

Level Of Service Computation Report
2000 HCM Operations Method (Future Volume Alternative)

Intersection #4 Madison St/Lincoln Ave

Cycle (sec):	100	Critical Vol./Cap.(X):	0.491
Loss Time (sec):	16 (Y+R=4.0 sec)	Average Delay (sec/veh):	30.9
Optimal Cycle:	50	Level Of Service:	C

Street Name:	Madison St						Lincoln Ave					
Approach:	North Bound			South Bound			East Bound			West Bound		
Movement:	L -	T -	R	L -	T -	R	L -	T -	R	L -	T -	R
Control:	Protected			Protected			Protected			Protected		
Rights:	Include			Include			Include			Include		
Min. Green:	7	7	7	7	7	7	7	7	7	7	7	7
Lanes:	1 0	1 1	0	1 0	1 1	0	1 0	0 1	0	1 0	1 1	0
Volume Module:												
Base Vol:	128	663	11	42	238	180	179	310	54	11	245	69
Growth Adj:	1.00	1.00	1.00	1.00	1.00	1.00	1.00	1.00	1.00	1.00	1.00	1.00
Initial Bse:	128	663	11	42	238	180	179	310	54	11	245	69
Added Vol:	0	0	0	0	0	0	0	0	0	0	0	0
PasserByVol:	0	0	0	0	0	0	0	0	0	0	0	0
Initial Fut:	128	663	11	42	238	180	179	310	54	11	245	69
User Adj:	1.00	1.00	1.00	1.00	1.00	1.00	1.00	1.00	1.00	1.00	1.00	1.00
PHF Adj:	1.00	1.00	1.00	1.00	1.00	1.00	1.00	1.00	1.00	1.00	1.00	1.00
PHF Volume:	128	663	11	42	238	180	179	310	54	11	245	69
Reduct Vol:	0	0	0	0	0	0	0	0	0	0	0	0
Reduced Vol:	128	663	11	42	238	180	179	310	54	11	245	69
PCE Adj:	1.00	1.00	1.00	1.00	1.00	1.00	1.00	1.00	1.00	1.00	1.00	1.00
MLF Adj:	1.00	1.00	1.00	1.00	1.00	1.00	1.00	1.00	1.00	1.00	1.00	1.00
FinalVolume:	128	663	11	42	238	180	179	310	54	11	245	69
Saturation Flow Module:												
Sat/Lane:	1900	1900	1900	1900	1900	1900	1900	1900	1900	1900	1900	1900
Adjustment:	0.95	0.95	0.95	0.95	0.89	0.89	0.95	0.98	0.98	0.95	0.92	0.92
Lanes:	1.00	1.97	0.03	1.00	1.14	0.86	1.00	0.85	0.15	1.00	1.56	0.44
Final Sat.:	1805	3544	59	1805	1922	1454	1805	1583	276	1805	2724	767
Capacity Analysis Module:												
Vol/Sat:	0.07	0.19	0.19	0.02	0.12	0.12	0.10	0.20	0.20	0.01	0.09	0.09
Crit Moves:		****		****				****		****		
Green/Cycle:	0.15	0.34	0.34	0.07	0.26	0.26	0.22	0.36	0.36	0.07	0.20	0.20
Volume/Cap:	0.47	0.55	0.55	0.33	0.47	0.47	0.44	0.55	0.55	0.09	0.44	0.44
Delay/Veh:	40.2	27.2	27.2	45.8	31.5	31.5	34.2	26.6	26.6	43.8	35.3	35.3
User DelAdj:	1.00	1.00	1.00	1.00	1.00	1.00	1.00	1.00	1.00	1.00	1.00	1.00
AdjDel/Veh:	40.2	27.2	27.2	45.8	31.5	31.5	34.2	26.6	26.6	43.8	35.3	35.3
LOS by Move:	D	C	C	D	C	C	C	C	C	D	D	D
HCM2kAvgQ:	4	9	9	2	6	6	5	9	9	0	5	5

Note: Queue reported is the number of cars per lane.

Traffix 7.9.0415 (c) 2007 Dowling Assoc. Licensed to MMA, LONG BEACH, CA

Overlook Parkway Extension
Future Alt 3 (Gates Opened - With Overlook)
AM Peak Hour

Level Of Service Computation Report
2000 HCM Operations Method (Future Volume Alternative)

Intersection #6 Washington St/Indiana Ave

Cycle (sec):	100	Critical Vol./Cap.(X):	0.951
Loss Time (sec):	12 (Y+R=4.0 sec)	Average Delay (sec/veh):	42.1
Optimal Cycle:	130	Level Of Service:	D

Street Name:	Washington St						Indiana Ave					
Approach:	North Bound			South Bound			East Bound			West Bound		
Movement:	L - T - R			L - T - R			L - T - R			L - T - R		
Control:	Permitted			Permitted			Protected			Protected		
Rights:	Ovl			Include			Include			Include		
Min. Green:	7	7	7	7	7	7	7	7	7	7	7	7
Lanes:	1 0	0 1	0	1 0	0 1	0	1 0	1 1	0	1 0	1 1	0
Volume Module:												
Base Vol:	502	5	431	3	0	2	11	1182	224	168	443	8
Growth Adj:	1.00	1.00	1.00	1.00	1.00	1.00	1.00	1.00	1.00	1.00	1.00	1.00
Initial Bse:	502	5	431	3	0	2	11	1182	224	168	443	8
Added Vol:	0	0	0	0	0	0	0	0	0	0	0	0
PasserByVol:	0	0	0	0	0	0	0	0	0	0	0	0
Initial Fut:	502	5	431	3	0	2	11	1182	224	168	443	8
User Adj:	1.00	1.00	1.00	1.00	1.00	1.00	1.00	1.00	1.00	1.00	1.00	1.00
PHF Adj:	1.00	1.00	1.00	1.00	1.00	1.00	1.00	1.00	1.00	1.00	1.00	1.00
PHF Volume:	502	5	431	3	0	2	11	1182	224	168	443	8
Reduct Vol:	0	0	0	0	0	0	0	0	0	0	0	0
Reduced Vol:	502	5	431	3	0	2	11	1182	224	168	443	8
PCE Adj:	1.00	1.00	1.00	1.00	1.00	1.00	1.00	1.00	1.00	1.00	1.00	1.00
MLF Adj:	1.00	1.00	1.00	1.00	1.00	1.00	1.00	1.00	1.00	1.00	1.00	1.00
FinalVolume:	502	5	431	3	0	2	11	1182	224	168	443	8
Saturation Flow Module:												
Sat/Lane:	1900	1900	1900	1900	1900	1900	1900	1900	1900	1900	1900	1900
Adjustment:	0.77	0.85	0.85	0.28	1.00	0.85	0.95	0.93	0.93	0.95	0.95	0.95
Lanes:	1.00	0.01	0.99	1.00	0.00	1.00	1.00	1.68	0.32	1.00	1.96	0.04
Final Sat.:	1457	19	1600	528	0	1615	1805	2962	561	1805	3535	64
Capacity Analysis Module:												
Vol/Sat:	0.34	0.27	0.27	0.01	0.00	0.00	0.01	0.40	0.40	0.09	0.13	0.13
Crit Moves:	****							****		****		
Green/Cycle:	0.36	0.36	0.46	0.36	0.00	0.36	0.19	0.42	0.42	0.10	0.33	0.33
Volume/Cap:	0.95	0.74	0.59	0.02	0.00	0.00	0.03	0.95	0.95	0.95	0.38	0.38
Delay/Veh:	58.2	32.9	21.1	20.5	0.0	20.4	33.4	41.5	41.5	98.1	25.7	25.7
User DelAdj:	1.00	1.00	1.00	1.00	1.00	1.00	1.00	1.00	1.00	1.00	1.00	1.00
AdjDel/Veh:	58.2	32.9	21.1	20.5	0.0	20.4	33.4	41.5	41.5	98.1	25.7	25.7
LOS by Move:	E	C	C	C	A	C	C	D	D	F	C	C
HCM2kAvgQ:	20	13	10	0	0	0	0	27	27	9	6	6

Note: Queue reported is the number of cars per lane.

Traffix 7.9.0415 (c) 2007 Dowling Assoc. Licensed to MMA, LONG BEACH, CA

Overlook Parkway Extension
Future Alt 3 (Gates Opened - With Overlook)
AM Peak Hour

Level Of Service Computation Report
2000 HCM 4-Way Stop Method (Future Volume Alternative)

Intersection #7 Washington St/Lincoln Ave

Cycle (sec):	100	Critical Vol./Cap.(X):	2.069
Loss Time (sec):	0 (Y+R=4.0 sec)	Average Delay (sec/veh):	257.5
Optimal Cycle:	0	Level Of Service:	F

Street Name:	Washington St						Lincoln Ave					
Approach:	North Bound			South Bound			East Bound			West Bound		
Movement:	L - T - R			L - T - R			L - T - R			L - T - R		
Control:	Stop Sign			Stop Sign			Stop Sign			Stop Sign		
Rights:	Include			Include			Include			Include		
Min. Green:	7	7	7	7	7	7	7	7	7	7	7	7
Lanes:	0 0	1! 0	0	0 0	1! 0	0	0 0	1! 0	0	0 1	0 0	1
Volume Module:												
Base Vol:	74	815	38	49	367	22	21	325	40	44	191	53
Growth Adj:	1.00	1.00	1.00	1.00	1.00	1.00	1.00	1.00	1.00	1.00	1.00	1.00
Initial Bse:	74	815	38	49	367	22	21	325	40	44	191	53
Added Vol:	0	0	0	0	0	0	0	0	0	0	0	0
PasserByVol:	0	0	0	0	0	0	0	0	0	0	0	0
Initial Fut:	74	815	38	49	367	22	21	325	40	44	191	53
User Adj:	1.00	1.00	1.00	1.00	1.00	1.00	1.00	1.00	1.00	1.00	1.00	1.00
PHF Adj:	1.00	1.00	1.00	1.00	1.00	1.00	1.00	1.00	1.00	1.00	1.00	1.00
PHF Volume:	74	815	38	49	367	22	21	325	40	44	191	53
Reduct Vol:	0	0	0	0	0	0	0	0	0	0	0	0
Reduced Vol:	74	815	38	49	367	22	21	325	40	44	191	53
PCE Adj:	1.00	1.00	1.00	1.00	1.00	1.00	1.00	1.00	1.00	1.00	1.00	1.00
MLF Adj:	1.00	1.00	1.00	1.00	1.00	1.00	1.00	1.00	1.00	1.00	1.00	1.00
FinalVolume:	74	815	38	49	367	22	21	325	40	44	191	53
Saturation Flow Module:												
Adjustment:	1.00	1.00	1.00	1.00	1.00	1.00	1.00	1.00	1.00	1.00	1.00	1.00
Lanes:	0.08	0.88	0.04	0.11	0.84	0.05	0.05	0.85	0.10	0.19	0.81	1.00
Final Sat.:	36	394	18	50	373	22	23	361	44	72	314	421
Capacity Analysis Module:												
Vol/Sat:	2.07	2.07	2.07	0.98	0.98	0.98	0.90	0.90	0.90	0.61	0.61	0.13
Crit Moves:	****			****				****			****	
Delay/Veh:	507.2	507	507.2	66.8	66.8	66.8	50.0	50.0	50.0	24.4	24.4	12.2
Delay Adj:	1.00	1.00	1.00	1.00	1.00	1.00	1.00	1.00	1.00	1.00	1.00	1.00
AdjDel/Veh:	507.2	507	507.2	66.8	66.8	66.8	50.0	50.0	50.0	24.4	24.4	12.2
LOS by Move:	F	F	F	F	F	F	E	E	E	C	C	B
ApproachDel:	507.2			66.8			50.0			22.2		
Delay Adj:	1.00			1.00			1.00			1.00		
ApprAdjDel:	507.2			66.8			50.0			22.2		
LOS by Appr:	F			F			E			C		
AllWayAvgQ:	61.7	61.7	61.7	6.9	6.9	6.9	4.6	4.6	4.6	1.4	1.4	0.1

Traffix 7.9.0415 (c) 2007 Dowling Assoc. Licensed to MMA, LONG BEACH, CA

Overlook Parkway Extension
Future Alt 3 (Gates Opened - With Overlook)
AM Peak Hour

Note: Queue reported is the number of cars per lane.

Overlook Parkway Extension
Future Alt 3 (Gates Opened - With Overlook)
AM Peak Hour

Level Of Service Computation Report
2000 HCM Operations Method (Future Volume Alternative)

Intersection #9 Washington St/Overlook Pkwy

Cycle (sec):	100	Critical Vol./Cap.(X):	1.197
Loss Time (sec):	12 (Y+R=4.0 sec)	Average Delay (sec/veh):	109.4
Optimal Cycle:	130	Level Of Service:	F

Street Name:	Washington St						Overlook Pkwy					
Approach:	North Bound			South Bound			East Bound			West Bound		
Movement:	L -	T -	R	L -	T -	R	L -	T -	R	L -	T -	R
Control:	Protected			Protected			Protected			Protected		
Rights:	Include			Include			Include			Ovl		
Min. Green:	7	7	7	7	7	7	7	7	7	7	7	7
Lanes:	0 0	1 1	0	1 0	2 0	0	0 0	0 0	0	1 0	0 0	1
Volume Module:												
Base Vol:	0	1950	44	566	626	0	0	0	0	36	0	806
Growth Adj:	1.00	1.00	1.00	1.00	1.00	1.00	1.00	1.00	1.00	1.00	1.00	1.00
Initial Bse:	0	1950	44	566	626	0	0	0	0	36	0	806
Added Vol:	0	0	0	0	0	0	0	0	0	0	0	0
PasserByVol:	0	0	0	0	0	0	0	0	0	0	0	0
Initial Fut:	0	1950	44	566	626	0	0	0	0	36	0	806
User Adj:	1.00	1.00	1.00	1.00	1.00	1.00	1.00	1.00	1.00	1.00	1.00	1.00
PHF Adj:	1.00	1.00	1.00	1.00	1.00	1.00	1.00	1.00	1.00	1.00	1.00	1.00
PHF Volume:	0	1950	44	566	626	0	0	0	0	36	0	806
Reduct Vol:	0	0	0	0	0	0	0	0	0	0	0	0
Reduced Vol:	0	1950	44	566	626	0	0	0	0	36	0	806
PCE Adj:	1.00	1.00	1.00	1.00	1.00	1.00	1.00	1.00	1.00	1.00	1.00	1.00
MLF Adj:	1.00	1.00	1.00	1.00	1.00	1.00	1.00	1.00	1.00	1.00	1.00	1.00
FinalVolume:	0	1950	44	566	626	0	0	0	0	36	0	806
Saturation Flow Module:												
Sat/Lane:	1900	1900	1900	1900	1900	1900	1900	1900	1900	1900	1900	1900
Adjustment:	1.00	0.95	0.95	0.95	0.95	1.00	1.00	1.00	1.00	0.95	1.00	0.85
Lanes:	0.00	1.96	0.04	1.00	2.00	0.00	0.00	0.00	0.00	1.00	0.00	1.00
Final Sat.:	0	3520	79	1805	3610	0	0	0	0	1805	0	1615
Capacity Analysis Module:												
Vol/Sat:	0.00	0.55	0.55	0.31	0.17	0.00	0.00	0.00	0.00	0.02	0.00	0.50
Crit Moves:		****		****								****
Green/Cycle:	0.00	0.46	0.46	0.26	0.52	0.00	0.00	0.00	0.00	0.11	0.00	0.42
Volume/Cap:	0.00	1.20	1.20	1.20	0.34	0.00	0.00	0.00	0.00	0.18	0.00	1.20
Delay/Veh:	0.0	122	121.5	144.5	14.2	0.0	0.0	0.0	0.0	40.6	0.0	131.7
User DelAdj:	1.00	1.00	1.00	1.00	1.00	1.00	1.00	1.00	1.00	1.00	1.00	1.00
AdjDel/Veh:	0.0	122	121.5	144.5	14.2	0.0	0.0	0.0	0.0	40.6	0.0	131.7
LOS by Move:	A	F	F	F	B	A	A	A	A	D	A	F
HCM2kAvgQ:	0	56	56	32	6	0	0	0	0	1	0	44

Note: Queue reported is the number of cars per lane.

Overlook Parkway Extension
Future Alt 3 (Gates Opened - With Overlook)
AM Peak Hour

Level Of Service Computation Report
2000 HCM Operations Method (Future Volume Alternative)

Intersection #10 Riverside Ave-SR-91 WB/Arlington Ave

Cycle (sec):	100	Critical Vol./Cap.(X):	0.973
Loss Time (sec):	12 (Y+R=4.0 sec)	Average Delay (sec/veh):	37.9
Optimal Cycle:	130	Level Of Service:	D

Street Name:	Riverside Ave-SR-91 WB						Arlington Ave					
Approach:	North Bound			South Bound			East Bound			West Bound		
Movement:	L -	T -	R	L -	T -	R	L -	T -	R	L -	T -	R
Control:	Protected			Protected			Protected			Protected		
Rights:	Include			Ovl			Ignore			Ignore		
Min. Green:	7	7	7	7	7	7	7	7	7	7	7	7
Lanes:	0 0	0	0	1 1	0	0 1	1 0	3	0 1	1 0	3	0 1
Volume Module:												
Base Vol:	0	0	0	603	42	570	85	1279	162	548	1221	276
Growth Adj:	1.00	1.00	1.00	1.00	1.00	1.00	1.00	1.00	1.00	1.00	1.00	1.00
Initial Bse:	0	0	0	603	42	570	85	1279	162	548	1221	276
Added Vol:	0	0	0	0	0	0	0	0	0	0	0	0
PasserByVol:	0	0	0	0	0	0	0	0	0	0	0	0
Initial Fut:	0	0	0	603	42	570	85	1279	162	548	1221	276
User Adj:	1.00	1.00	1.00	1.00	1.00	1.00	1.00	1.00	0.00	1.00	1.00	0.00
PHF Adj:	1.00	1.00	1.00	1.00	1.00	1.00	1.00	1.00	0.00	1.00	1.00	0.00
PHF Volume:	0	0	0	603	42	570	85	1279	0	548	1221	0
Reduct Vol:	0	0	0	0	0	0	0	0	0	0	0	0
Reduced Vol:	0	0	0	603	42	570	85	1279	0	548	1221	0
PCE Adj:	1.00	1.00	1.00	1.00	1.00	1.00	1.00	1.00	0.00	1.00	1.00	0.00
MLF Adj:	1.00	1.00	1.00	1.00	1.00	1.00	1.00	1.00	0.00	1.00	1.00	0.00
FinalVolume:	0	0	0	603	42	570	85	1279	0	548	1221	0
Saturation Flow Module:												
Sat/Lane:	1900	1900	1900	1900	1900	1900	1900	1900	1900	1900	1900	1900
Adjustment:	1.00	1.00	1.00	0.93	0.93	0.85	0.95	0.91	1.00	0.95	0.91	1.00
Lanes:	0.00	0.00	0.00	1.87	0.13	1.00	1.00	3.00	1.00	1.00	3.00	1.00
Final Sat.:	0	0	0	3290	229	1615	1805	5187	1900	1805	5187	1900
Capacity Analysis Module:												
Vol/Sat:	0.00	0.00	0.00	0.18	0.18	0.35	0.05	0.25	0.00	0.30	0.24	0.00
Crit Moves:						****		****		****		
Green/Cycle:	0.00	0.00	0.00	0.27	0.30	0.43	0.13	0.26	0.00	0.32	0.45	0.00
Volume/Cap:	0.00	0.00	0.00	0.69	0.61	0.82	0.35	0.95	0.00	0.95	0.53	0.00
Delay/Veh:	0.0	0.0	0.0	35.0	31.2	32.4	40.3	50.1	0.0	58.0	20.2	0.0
User DelAdj:	1.00	1.00	1.00	1.00	1.00	1.00	1.00	1.00	1.00	1.00	1.00	1.00
AdjDel/Veh:	0.0	0.0	0.0	35.0	31.2	32.4	40.3	50.1	0.0	58.0	20.2	0.0
LOS by Move:	A	A	A	D	C	C	D	D	A	E	C	A
HCM2kAvgQ:	0	0	0	10	9	18	3	19	0	21	10	0

Note: Queue reported is the number of cars per lane.

Traffix 7.9.0415 (c) 2007 Dowling Assoc. Licensed to MMA, LONG BEACH, CA

Overlook Parkway Extension
Future Alt 3 (Gates Opened - With Overlook)
AM Peak Hour

Level Of Service Computation Report
2000 HCM Operations Method (Future Volume Alternative)

Intersection #11 Indiana Ave-SR-91 EB/Arlington Ave

Cycle (sec):	100	Critical Vol./Cap.(X):	0.800
Loss Time (sec):	12 (Y+R=4.0 sec)	Average Delay (sec/veh):	29.6
Optimal Cycle:	77	Level Of Service:	C

Street Name:	Indiana Ave-SR-91 EB						Arlington Ave					
Approach:	North Bound			South Bound			East Bound			West Bound		
Movement:	L -	T -	R	L -	T -	R	L -	T -	R	L -	T -	R
Control:	Protected			Protected			Protected			Protected		
Rights:	Ovl			Include			Ovl			Ignore		
Min. Green:	7	7	7	7	7	7	7	7	7	7	7	7
Lanes:	1 1	1	0 1	0 0	0	0 0	1 0	2	0 1	1 0	4	0 1
Volume Module:												
Base Vol:	215	304	543	0	0	0	248	1326	244	120	2052	339
Growth Adj:	1.00	1.00	1.00	1.00	1.00	1.00	1.00	1.00	1.00	1.00	1.00	1.00
Initial Bse:	215	304	543	0	0	0	248	1326	244	120	2052	339
Added Vol:	0	0	0	0	0	0	0	0	0	0	0	0
PasserByVol:	0	0	0	0	0	0	0	0	0	0	0	0
Initial Fut:	215	304	543	0	0	0	248	1326	244	120	2052	339
User Adj:	1.00	1.00	1.00	1.00	1.00	1.00	1.00	1.00	1.00	1.00	1.00	0.00
PHF Adj:	1.00	1.00	1.00	1.00	1.00	1.00	1.00	1.00	1.00	1.00	1.00	0.00
PHF Volume:	215	304	543	0	0	0	248	1326	244	120	2052	0
Reduct Vol:	0	0	0	0	0	0	0	0	0	0	0	0
Reduced Vol:	215	304	543	0	0	0	248	1326	244	120	2052	0
PCE Adj:	1.00	1.00	1.00	1.00	1.00	1.00	1.00	1.00	1.00	1.00	1.00	0.00
MLF Adj:	1.00	1.00	1.00	1.00	1.00	1.00	1.00	1.00	1.00	1.00	1.00	0.00
FinalVolume:	215	304	543	0	0	0	248	1326	244	120	2052	0
Saturation Flow Module:												
Sat/Lane:	1900	1900	1900	1900	1900	1900	1900	1900	1900	1900	1900	1900
Adjustment:	0.92	0.92	0.85	1.00	1.00	1.00	0.95	0.95	0.85	0.95	0.91	1.00
Lanes:	1.24	1.76	1.00	0.00	0.00	0.00	1.00	2.00	1.00	1.00	4.00	1.00
Final Sat.:	2176	3077	1615	0	0	0	1805	3610	1615	1805	6916	1900
Capacity Analysis Module:												
Vol/Sat:	0.10	0.10	0.34	0.00	0.00	0.00	0.14	0.37	0.15	0.07	0.30	0.00
Crit Moves:			****				****				****	
Green/Cycle:	0.24	0.33	0.42	0.00	0.00	0.00	0.17	0.46	0.69	0.09	0.37	0.00
Volume/Cap:	0.42	0.30	0.80	0.00	0.00	0.00	0.80	0.80	0.22	0.76	0.80	0.00
Delay/Veh:	32.5	24.7	31.7	0.0	0.0	0.0	52.9	26.1	5.6	64.0	29.8	0.0
User DelAdj:	1.00	1.00	1.00	1.00	1.00	1.00	1.00	1.00	1.00	1.00	1.00	1.00
AdjDel/Veh:	32.5	24.7	31.7	0.0	0.0	0.0	52.9	26.1	5.6	64.0	29.8	0.0
LOS by Move:	C	C	C	A	A	A	D	C	A	E	C	A
HCM2kAvgQ:	5	4	16	0	0	0	9	20	3	5	17	0

Note: Queue reported is the number of cars per lane.

Traffix 7.9.0415 (c) 2007 Dowling Assoc. Licensed to MMA, LONG BEACH, CA

Overlook Parkway Extension
Future Alt 3 (Gates Opened - With Overlook)
AM Peak Hour

Level Of Service Computation Report
2000 HCM Operations Method (Future Volume Alternative)

Intersection #12 Victoria Ave/Arlington Ave

Cycle (sec):	100	Critical Vol./Cap.(X):	1.180
Loss Time (sec):	16 (Y+R=4.0 sec)	Average Delay (sec/veh):	88.9
Optimal Cycle:	130	Level Of Service:	F

Street Name:	Victoria Ave									Arlington Ave								
Approach:	North Bound				South Bound				East Bound				West Bound					
Movement:	L	-	T	-	R	L	-	T	-	R	L	-	T	-	R	L	-	T	-	R
Control:	Protected					Protected					Protected					Protected				
Rights:	Ovl					Include					Include					Include				
Min. Green:	7	7	7			7	7	7			7	7	7			7	7	7		
Lanes:	1	0	1	0	1	1	0	1	0	1	1	0	2	1	0	1	0	2	1	0
Volume Module:																				
Base Vol:	22	480	381			251	274	195			298	1323	6			320	1802	389		
Growth Adj:	1.00	1.00	1.00			1.00	1.00	1.00			1.00	1.00	1.00			1.00	1.00	1.00		
Initial Bse:	22	480	381			251	274	195			298	1323	6			320	1802	389		
Added Vol:	0	0	0			0	0	0			0	0	0			0	0	0		
PasserByVol:	0	0	0			0	0	0			0	0	0			0	0	0		
Initial Fut:	22	480	381			251	274	195			298	1323	6			320	1802	389		
User Adj:	1.00	1.00	1.00			1.00	1.00	1.00			1.00	1.00	1.00			1.00	1.00	1.00		
PHF Adj:	1.00	1.00	1.00			1.00	1.00	1.00			1.00	1.00	1.00			1.00	1.00	1.00		
PHF Volume:	22	480	381			251	274	195			298	1323	6			320	1802	389		
Reduct Vol:	0	0	0			0	0	0			0	0	0			0	0	0		
Reduced Vol:	22	480	381			251	274	195			298	1323	6			320	1802	389		
PCE Adj:	1.00	1.00	1.00			1.00	1.00	1.00			1.00	1.00	1.00			1.00	1.00	1.00		
MLF Adj:	1.00	1.00	1.00			1.00	1.00	1.00			1.00	1.00	1.00			1.00	1.00	1.00		
FinalVolume:	22	480	381			251	274	195			298	1323	6			320	1802	389		
Saturation Flow Module:																				
Sat/Lane:	1900	1900	1900			1900	1900	1900			1900	1900	1900			1900	1900	1900		
Adjustment:	0.95	1.00	0.85			0.95	1.00	0.85			0.95	0.91	0.91			0.95	0.89	0.89		
Lanes:	1.00	1.00	1.00			1.00	1.00	1.00			1.00	2.99	0.01			1.00	2.47	0.53		
Final Sat.:	1805	1900	1615			1805	1900	1615			1805	5158	23			1805	4151	896		
Capacity Analysis Module:																				
Vol/Sat:	0.01	0.25	0.24			0.14	0.14	0.12			0.17	0.26	0.26			0.18	0.43	0.43		
Crit Moves:		****				****					****						****			
Green/Cycle:	0.11	0.21	0.42			0.12	0.22	0.22			0.14	0.30	0.30			0.21	0.37	0.37		
Volume/Cap:	0.11	1.18	0.56			1.18	0.65	0.54			1.18	0.85	0.85			0.85	1.18	1.18		
Delay/Veh:	40.5	143	22.9			162.8	38.6	35.9			157.0	37.7	37.7			55.2	118	118.4		
User DelAdj:	1.00	1.00	1.00			1.00	1.00	1.00			1.00	1.00	1.00			1.00	1.00	1.00		
AdjDel/Veh:	40.5	143	22.9			162.8	38.6	35.9			157.0	37.7	37.7			55.2	118	118.4		
LOS by Move:	D	F	C			F	D	D			F	D	D			E	F	F		
HCM2kAvgQ:	1	27	9			15	9	6			18	17	17			12	43	43		

Note: Queue reported is the number of cars per lane.

Traffix 7.9.0415 (c) 2007 Dowling Assoc. Licensed to MMA, LONG BEACH, CA

Overlook Parkway Extension
Future Alt 3 (Gates Opened - With Overlook)
AM Peak Hour

Level Of Service Computation Report
2000 HCM Operations Method (Future Volume Alternative)

Intersection #13 Alessandro Blvd/Arlington Ave

Cycle (sec):	100	Critical Vol./Cap.(X):	1.002
Loss Time (sec):	16 (Y+R=4.0 sec)	Average Delay (sec/veh):	53.0
Optimal Cycle:	130	Level Of Service:	D

Street Name:	Alessandro Blvd									Arlington Ave								
Approach:	North Bound				South Bound				East Bound				West Bound					
Movement:	L	-	T	-	R	L	-	T	-	R	L	-	T	-	R	L	-	T	-	R
Control:	Protected					Protected					Protected					Protected				
Rights:	Ovl					Include					Ovl					Ovl				
Min. Green:	7	7	7			7	7	7			7	7	7			7	7	7		
Lanes:	2	0	2	0	1	2	0	2	1	0	1	0	2	0	2	2	0	2	0	1
Volume Module:																				
Base Vol:	1398	1231	473			455	603	64			40	982	837			139	869	292		
Growth Adj:	1.00	1.00	1.00			1.00	1.00	1.00			1.00	1.00	1.00			1.00	1.00	1.00		
Initial Bse:	1398	1231	473			455	603	64			40	982	837			139	869	292		
Added Vol:	0	0	0			0	0	0			0	0	0			0	0	0		
PasserByVol:	0	0	0			0	0	0			0	0	0			0	0	0		
Initial Fut:	1398	1231	473			455	603	64			40	982	837			139	869	292		
User Adj:	1.00	1.00	1.00			1.00	1.00	1.00			1.00	1.00	1.00			1.00	1.00	1.00		
PHF Adj:	1.00	1.00	1.00			1.00	1.00	1.00			1.00	1.00	1.00			1.00	1.00	1.00		
PHF Volume:	1398	1231	473			455	603	64			40	982	837			139	869	292		
Reduct Vol:	0	0	0			0	0	0			0	0	0			0	0	0		
Reduced Vol:	1398	1231	473			455	603	64			40	982	837			139	869	292		
PCE Adj:	1.00	1.00	1.00			1.00	1.00	1.00			1.00	1.00	1.00			1.00	1.00	1.00		
MLF Adj:	1.00	1.00	1.00			1.00	1.00	1.00			1.00	1.00	1.00			1.00	1.00	1.00		
FinalVolume:	1398	1231	473			455	603	64			40	982	837			139	869	292		
Saturation Flow Module:																				
Sat/Lane:	1900	1900	1900			1900	1900	1900			1900	1900	1900			1900	1900	1900		
Adjustment:	0.92	0.95	0.85			0.92	0.90	0.90			0.95	0.95	0.75			0.92	0.95	0.85		
Lanes:	2.00	2.00	1.00			2.00	2.71	0.29			1.00	2.00	2.00			2.00	2.00	1.00		
Final Sat.:	3502	3610	1615			3502	4624	491			1805	3610	2842			3502	3610	1615		
Capacity Analysis Module:																				
Vol/Sat:	0.40	0.34	0.29			0.13	0.13	0.13			0.02	0.27	0.29			0.04	0.24	0.18		
Crit Moves:	****					****						****				****				
Green/Cycle:	0.38	0.37	0.44			0.14	0.13	0.13			0.07	0.26	0.64			0.07	0.26	0.40		
Volume/Cap:	1.04	0.93	0.67			0.93	1.04	1.04			0.30	1.04	0.46			0.57	0.94	0.46		
Delay/Veh:	66.8	41.4	24.8			66.0	90.4	90.4			45.0	77.5	9.1			48.1	53.0	22.7		
User DelAdj:	1.00	1.00	1.00			1.00	1.00	1.00			1.00	1.00	1.00			1.00	1.00	1.00		
AdjDel/Veh:	66.8	41.4	24.8			66.0	90.4	90.4			45.0	77.5	9.1			48.1	53.0	22.7		
LOS by Move:	E	D	C			E	F	F			D	E	A			D	D	C		
HCM2kAvgQ:	31	24	12			11	13	13			1	24	7			3	18	7		

Note: Queue reported is the number of cars per lane.

Traffix 7.9.0415 (c) 2007 Dowling Assoc. Licensed to MMA, LONG BEACH, CA

Overlook Parkway Extension
Future Alt 3 (Gates Opened - With Overlook)
AM Peak Hour

Level Of Service Computation Report
2000 HCM Operations Method (Future Volume Alternative)

Intersection #14 Alessandro Blvd/Overlook Pkwy

Cycle (sec):	100	Critical Vol./Cap.(X):	1.423
Loss Time (sec):	16 (Y+R=4.0 sec)	Average Delay (sec/veh):	130.3
Optimal Cycle:	130	Level Of Service:	F

Street Name:	Alessandro Blvd						Overlook Pkwy					
Approach:	North Bound			South Bound			East Bound			West Bound		
Movement:	L -	T -	R	L -	T -	R	L -	T -	R	L -	T -	R
Control:	Protected			Protected			Protected			Protected		
Rights:	Include			Include			Include			Include		
Min. Green:	7	7	7	7	7	7	7	7	7	7	7	7
Lanes:	1 0	3 0	1	1 0	2 1	0	1 0	1 1	0	2 0	1 1	0
Volume Module:												
Base Vol:	447	2728	1213	5	1410	88	157	88	477	487	216	15
Growth Adj:	1.00	1.00	1.00	1.00	1.00	1.00	1.00	1.00	1.00	1.00	1.00	1.00
Initial Bse:	447	2728	1213	5	1410	88	157	88	477	487	216	15
Added Vol:	0	0	0	0	0	0	0	0	0	0	0	0
PasserByVol:	0	0	0	0	0	0	0	0	0	0	0	0
Initial Fut:	447	2728	1213	5	1410	88	157	88	477	487	216	15
User Adj:	1.00	1.00	1.00	1.00	1.00	1.00	1.00	1.00	1.00	1.00	1.00	1.00
PHF Adj:	1.00	1.00	1.00	1.00	1.00	1.00	1.00	1.00	1.00	1.00	1.00	1.00
PHF Volume:	447	2728	1213	5	1410	88	157	88	477	487	216	15
Reduct Vol:	0	0	0	0	0	0	0	0	0	0	0	0
Reduced Vol:	447	2728	1213	5	1410	88	157	88	477	487	216	15
PCE Adj:	1.00	1.00	1.00	1.00	1.00	1.00	1.00	1.00	1.00	1.00	1.00	1.00
MLF Adj:	1.00	1.00	1.00	1.00	1.00	1.00	1.00	1.00	1.00	1.00	1.00	1.00
FinalVolume:	447	2728	1213	5	1410	88	157	88	477	487	216	15
Saturation Flow Module:												
Sat/Lane:	1900	1900	1900	1900	1900	1900	1900	1900	1900	1900	1900	1900
Adjustment:	0.95	0.91	0.85	0.95	0.90	0.90	0.95	0.83	0.83	0.92	0.94	0.94
Lanes:	1.00	3.00	1.00	1.00	2.82	0.18	1.00	1.00	1.00	2.00	1.87	0.13
Final Sat.:	1805	5187	1615	1805	4838	302	1805	1576	1576	3502	3342	232
Capacity Analysis Module:												
Vol/Sat:	0.25	0.53	0.75	0.00	0.29	0.29	0.09	0.06	0.30	0.14	0.06	0.06
Crit Moves:			****	****					****	****		
Green/Cycle:	0.25	0.48	0.48	0.07	0.30	0.30	0.16	0.20	0.20	0.09	0.13	0.13
Volume/Cap:	0.97	1.08	1.55	0.04	0.97	0.97	0.55	0.29	1.55	1.55	0.51	0.51
Delay/Veh:	71.4	71.5	279.2	43.5	51.2	51.2	41.1	34.4	300.6	307.9	41.7	41.7
User DelAdj:	1.00	1.00	1.00	1.00	1.00	1.00	1.00	1.00	1.00	1.00	1.00	1.00
AdjDel/Veh:	71.4	71.5	279.2	43.5	51.2	51.2	41.1	34.4	300.6	307.9	41.7	41.7
LOS by Move:	E	E	F	D	D	D	D	C	F	F	D	D
HCM2kAvgQ:	19	45	90	0	22	22	5	3	39	20	4	4

Note: Queue reported is the number of cars per lane.

Traffix 7.9.0415 (c) 2007 Dowling Assoc. Licensed to MMA, LONG BEACH, CA

Overlook Parkway Extension
Future Alt 3 (Gates Opened - With Overlook)
AM Peak Hour

Level Of Service Computation Report
2000 HCM Operations Method (Future Volume Alternative)

Intersection #15 Alessandro Blvd/Trautwein Rd

Cycle (sec):	100	Critical Vol./Cap.(X):	1.002
Loss Time (sec):	12 (Y+R=4.0 sec)	Average Delay (sec/veh):	66.3
Optimal Cycle:	130	Level Of Service:	E

Street Name:	Alessandro Blvd						Trautwein Rd					
Approach:	North Bound			South Bound			East Bound			West Bound		
Movement:	L -	T -	R	L -	T -	R	L -	T -	R	L -	T -	R
Control:	Protected			Protected			Protected			Protected		
Rights:	Include			Ignore			Ignore			Include		
Min. Green:	7	7	7	7	7	7	7	7	7	7	7	7
Lanes:	2 0	3 0	0	0 0	3 0	1	3 0	0 0	1	0 0	0 0	0
Volume Module:												
Base Vol:	74	2194	0	0	1459	728	2410	0	176	0	0	0
Growth Adj:	1.00	1.00	1.00	1.00	1.00	1.00	1.00	1.00	1.00	1.00	1.00	1.00
Initial Bse:	74	2194	0	0	1459	728	2410	0	176	0	0	0
Added Vol:	0	0	0	0	0	0	0	0	0	0	0	0
PasserByVol:	0	0	0	0	0	0	0	0	0	0	0	0
Initial Fut:	74	2194	0	0	1459	728	2410	0	176	0	0	0
User Adj:	1.00	1.00	1.00	1.00	1.00	0.00	1.00	1.00	0.00	1.00	1.00	1.00
PHF Adj:	1.00	1.00	1.00	1.00	1.00	0.00	1.00	1.00	0.00	1.00	1.00	1.00
PHF Volume:	74	2194	0	0	1459	0	2410	0	0	0	0	0
Reduct Vol:	0	0	0	0	0	0	0	0	0	0	0	0
Reduced Vol:	74	2194	0	0	1459	0	2410	0	0	0	0	0
PCE Adj:	1.00	1.00	1.00	1.00	1.00	0.00	1.00	1.00	0.00	1.00	1.00	1.00
MLF Adj:	1.00	1.00	1.00	1.00	1.00	0.00	1.00	1.00	0.00	1.00	1.00	1.00
FinalVolume:	74	2194	0	0	1459	0	2410	0	0	0	0	0
Saturation Flow Module:												
Sat/Lane:	1900	1900	1900	1900	1900	1900	1900	1900	1900	1900	1900	1900
Adjustment:	0.92	0.91	1.00	1.00	0.91	1.00	0.92	1.00	1.00	1.00	1.00	1.00
Lanes:	2.00	3.00	0.00	0.00	3.00	1.00	3.00	0.00	1.00	0.00	0.00	0.00
Final Sat.:	3502	5187	0	0	5187	1900	5253	0	1900	0	0	0
Capacity Analysis Module:												
Vol/Sat:	0.02	0.42	0.00	0.00	0.28	0.00	0.46	0.00	0.00	0.00	0.00	0.00
Crit Moves:		****		****			****					
Green/Cycle:	0.09	0.39	0.00	0.00	0.37	0.00	0.42	0.00	0.00	0.00	0.00	0.00
Volume/Cap:	0.23	1.09	0.00	0.00	0.77	0.00	1.09	0.00	0.00	0.00	0.00	0.00
Delay/Veh:	42.5	79.4	0.0	0.0	29.8	0.0	77.1	0.0	0.0	0.0	0.0	0.0
User DelAdj:	1.00	1.00	1.00	1.00	1.00	1.00	1.00	1.00	1.00	1.00	1.00	1.00
AdjDel/Veh:	42.5	79.4	0.0	0.0	29.8	0.0	77.1	0.0	0.0	0.0	0.0	0.0
LOS by Move:	D	E	A	A	C	A	E	A	A	A	A	A
HCM2kAvgQ:	1	37	0	0	16	0	38	0	0	0	0	0

Note: Queue reported is the number of cars per lane.

Traffix 7.9.0415 (c) 2007 Dowling Assoc. Licensed to MMA, LONG BEACH, CA

Overlook Parkway Extension
Future Alt 3 (Gates Opened - With Overlook)
AM Peak Hour

Level Of Service Computation Report
2000 HCM 4-Way Stop Method (Future Volume Alternative)

Intersection #16 Crystal View Ter/Overlook Pkwy

Cycle (sec):	100	Critical Vol./Cap.(X):	0.602
Loss Time (sec):	0 (Y+R=4.0 sec)	Average Delay (sec/veh):	15.1
Optimal Cycle:	0	Level Of Service:	C

Street Name:	Crystal View Ter							Overlook Pkwy					
Approach:	North Bound			South Bound			East Bound			West Bound			
Movement:	L	T	R	L	T	R	L	T	R	L	T	R	
Control:	Stop Sign			Stop Sign			Stop Sign			Stop Sign			
Rights:	Include			Include			Include			Include			
Min. Green:	7	7	7	7	7	7	7	7	7	7	7	7	
Lanes:	0 0	1! 0	0	0 0	1! 0	0	1 0	1 1	0	1 0	1 1	0	
Volume Module:													
Base Vol:	70	0	18	0	0	0	0	658	29	2	772	0	
Growth Adj:	1.00	1.00	1.00	1.00	1.00	1.00	1.00	1.00	1.00	1.00	1.00	1.00	
Initial Bse:	70	0	18	0	0	0	0	658	29	2	772	0	
Added Vol:	0	0	0	0	0	0	0	0	0	0	0	0	
PasserByVol:	0	0	0	0	0	0	0	0	0	0	0	0	
Initial Fut:	70	0	18	0	0	0	0	658	29	2	772	0	
User Adj:	1.00	1.00	1.00	1.00	1.00	1.00	1.00	1.00	1.00	1.00	1.00	1.00	
PHF Adj:	1.00	1.00	1.00	1.00	1.00	1.00	1.00	1.00	1.00	1.00	1.00	1.00	
PHF Volume:	70	0	18	0	0	0	0	658	29	2	772	0	
Reduct Vol:	0	0	0	0	0	0	0	0	0	0	0	0	
Reduced Vol:	70	0	18	0	0	0	0	658	29	2	772	0	
PCE Adj:	1.00	1.00	1.00	1.00	1.00	1.00	1.00	1.00	1.00	1.00	1.00	1.00	
MLF Adj:	1.00	1.00	1.00	1.00	1.00	1.00	1.00	1.00	1.00	1.00	1.00	1.00	
FinalVolume:	70	0	18	0	0	0	0	658	29	2	772	0	
Saturation Flow Module:													
Adjustment:	1.00	1.00	1.00	1.00	1.00	1.00	1.00	1.00	1.00	1.00	1.00	1.00	
Lanes:	0.80	0.00	0.20	0.00	1.00	0.00	1.00	1.92	0.08	1.00	2.00	0.00	
Final Sat.:	424	0	109	0	498	0	572	1207	53	584	1281	0	
Capacity Analysis Module:													
Vol/Sat:	0.17	xxxx	0.17	xxxx	0.00	xxxx	0.00	0.55	0.54	0.00	0.60	xxxx	
Crit Moves:	****				****			****			****		
Delay/Veh:	10.6	0.0	10.6	0.0	0.0	0.0	0.0	14.6	14.5	8.8	16.1	0.0	
Delay Adj:	1.00	1.00	1.00	1.00	1.00	1.00	1.00	1.00	1.00	1.00	1.00	1.00	
AdjDel/Veh:	10.6	0.0	10.6	0.0	0.0	0.0	0.0	14.6	14.5	8.8	16.1	0.0	
LOS by Move:	B	*	B	*	*	*	*	B	B	A	C	*	
ApproachDel:	10.6			xxxxxx				14.6			16.0		
Delay Adj:	1.00			xxxxx				1.00			1.00		
ApprAdjDel:	10.6			xxxxxx				14.6			16.0		
LOS by Appr:	B			*				B			C		
AllWayAvgQ:	0.2	0.2	0.2	0.0	0.0	0.0	0.0	1.1	1.1	0.0	1.4	1.4	

Overlook Parkway Extension
Future Alt 3 (Gates Opened - With Overlook)
AM Peak Hour

Note: Queue reported is the number of cars per lane.

Overlook Parkway Extension
Future Alt 3 (Gates Opened - With Overlook)
AM Peak Hour

Level Of Service Computation Report
2000 HCM Unsignalized Method (Future Volume Alternative)

Intersection #17 Kingdom Dr/Overlook Pkwy

Average Delay (sec/veh): 4.7 Worst Case Level Of Service: D[34.4]

Street Name:	Kingdom Dr									Overlook Pkwy								
Approach:	North Bound				South Bound				East Bound				West Bound					
Movement:	L	-	T	-	R	L	-	T	-	R	L	-	T	-	R	L	-	T	-	R
Control:	Stop Sign					Stop Sign					Uncontrolled					Uncontrolled				
Rights:	Include					Include					Include					Include				
Lanes:	0	0	1!	0	0	1	0	0	0	0	1	0	1	1	0	1	0	1	1	0
Volume Module:																				
Base Vol:	82	0	120		6	0		0	0		577		43		42	745		0		
Growth Adj:	1.00	1.00	1.00		1.00	1.00		1.00	1.00		1.00		1.00		1.00	1.00		1.00		
Initial Bse:	82	0	120		6	0		0	0		577		43		42	745		0		
Added Vol:	0	0	0		0	0		0	0		0		0		0	0		0		
PasserByVol:	0	0	0		0	0		0	0		0		0		0	0		0		
Initial Fut:	82	0	120		6	0		0	0		577		43		42	745		0		
User Adj:	1.00	1.00	1.00		1.00	1.00		1.00	1.00		1.00		1.00		1.00	1.00		1.00		
PHF Adj:	1.00	1.00	1.00		1.00	1.00		1.00	1.00		1.00		1.00		1.00	1.00		1.00		
PHF Volume:	82	0	120		6	0		0	0		577		43		42	745		0		
Reduct Vol:	0	0	0		0	0		0	0		0		0		0	0		0		
FinalVolume:	82	0	120		6	0		0	0		577		43		42	745		0		
Critical Gap Module:																				
Critical Gp:	7.5	6.5	6.9		7.5	xxxx	xxxxx	xxxxx	xxxx	xxxxx		4.1	xxxx	xxxxx						
FollowUpTim:	3.5	4.0	3.3		3.5	xxxx	xxxxx	xxxxx	xxxx	xxxxx		2.2	xxxx	xxxxx						
Capacity Module:																				
Cnflict Vol:	1055	1428	310		1118	xxxx	xxxxx	xxxx	xxxx	xxxxx		620	xxxx	xxxxx						
Potent Cap.:	183	136	692		164	xxxx	xxxxx	xxxx	xxxx	xxxxx		970	xxxx	xxxxx						
Move Cap.:	177	130	692		131	xxxx	xxxxx	xxxx	xxxx	xxxxx		970	xxxx	xxxxx						
Volume/Cap:	0.46	0.00	0.17		0.05	xxxx	xxxx	xxxx	xxxx	xxxx		0.04	xxxx	xxxx						
Level Of Service Module:																				
2Way95thQ:	xxxx	xxxx	xxxxx		0.1	xxxx	xxxxx	xxxx	xxxx	xxxxx		0.1	xxxx	xxxxx						
Control Del:	xxxxx	xxxx	xxxxx		33.7	xxxx	xxxxx	xxxxx	xxxx	xxxxx		8.9	xxxx	xxxxx						
LOS by Move:	*	*	*		D	*	*	*	*	*		A	*	*						
Movement:	LT -	LTR -	RT		LT -	LTR -	RT	LT -	LTR -	RT		LT -	LTR -	RT						
Shared Cap.:	xxxx	317	xxxxx		xxxx	xxxx	xxxxx	xxxx	xxxx	xxxxx		xxxx	xxxx	xxxxx						
SharedQueue:	xxxxx	4.1	xxxxx		xxxxx	xxxx	xxxxx	xxxxx	xxxx	xxxxx		xxxxx	xxxx	xxxxx						
Shrd ConDel:	xxxxx	34.4	xxxxx		xxxxx	xxxx	xxxxx	xxxxx	xxxx	xxxxx		xxxxx	xxxx	xxxxx						
Shared LOS:	*	D	*		*	*	*	*	*	*		*	*	*						
ApproachDel:		34.4				33.7			xxxxxx				xxxxxx							
ApproachLOS:		D				D			*				*							

Note: Queue reported is the number of cars per lane.

Overlook Parkway Extension
Future Alt 3 (Gates Opened - With Overlook)
AM Peak Hour

Level Of Service Computation Report
2000 HCM Unsignalized Method (Future Volume Alternative)

Intersection #18 Kingdom Dr/Green Orchard Pl

Average Delay (sec/veh): 1.6 Worst Case Level Of Service: A[9.3]

Street Name:	Kingdom Dr									Green Orchard Pl								
Approach:	North Bound				South Bound				East Bound				West Bound					
Movement:	L	-	T	-	R	L	-	T	-	R	L	-	T	-	R	L	-	T	-	R
Control:	Uncontrolled					Uncontrolled					Stop Sign					Stop Sign				
Rights:	Include					Include					Include					Include				
Lanes:	0	0	0	1	0	0	1	0	0	0	0	0	0	0	0	0	0	1!	0	0
Volume Module:																				
Base Vol:	0	167		3		14	61		0		0		0		1		0		36	
Growth Adj:	1.00	1.00		1.00		1.00	1.00		1.00		1.00		1.00		1.00		1.00		1.00	
Initial Bse:	0	167		3		14	61		0		0		0		1		0		36	
Added Vol:	0	0		0		0	0		0		0		0		0		0		0	
PasserByVol:	0	0		0		0	0		0		0		0		0		0		0	
Initial Fut:	0	167		3		14	61		0		0		0		1		0		36	
User Adj:	1.00	1.00		1.00		1.00	1.00		1.00		1.00		1.00		1.00		1.00		1.00	
PHF Adj:	1.00	1.00		1.00		1.00	1.00		1.00		1.00		1.00		1.00		1.00		1.00	
PHF Volume:	0	167		3		14	61		0		0		0		1		0		36	
Reduct Vol:	0	0		0		0	0		0		0		0		0		0		0	
FinalVolume:	0	167		3		14	61		0		0		0		1		0		36	
Critical Gap Module:																				
Critical Gp:	xxxxx	xxxx	xxxxx		4.1	xxxx	xxxxx	xxxxx	xxxx	xxxxx		6.4	6.5		6.2					
FollowUpTim:	xxxxx	xxxx	xxxxx		2.2	xxxx	xxxxx	xxxxx	xxxx	xxxxx		3.5	4.0		3.3					
Capacity Module:																				
Cnflict Vol:	xxxx	xxxx	xxxxx		170	xxxx	xxxxx	xxxx	xxxx	xxxxx		258	258		169					
Potent Cap.:	xxxx	xxxx	xxxxx		1420	xxxx	xxxxx	xxxx	xxxx	xxxxx		736	650		881					
Move Cap.:	xxxx	xxxx	xxxxx		1420	xxxx	xxxxx	xxxx	xxxx	xxxxx		730	644		881					
Volume/Cap:	xxxx	xxxx	xxxx		0.01	xxxx	xxxx	xxxx	xxxx	xxxx		0.00	0.00		0.04					
Level Of Service Module:																				
2Way95thQ:	xxxx	xxxx	xxxxx		0.0	xxxx	xxxxx	xxxx	xxxx	xxxxx		xxxx	xxxx	xxxxx						
Control Del:	xxxxx	xxxx	xxxxx		7.6	xxxx	xxxxx	xxxxx	xxxx	xxxxx		xxxxx	xxxx	xxxxx						
LOS by Move:	*	*	*		A	*	*	*	*	*		*	*	*						
Movement:	LT -	LTR -	RT		LT -	LTR -	RT	LT -	LTR -	RT		LT -	LTR -	RT						
Shared Cap.:	xxxx	xxxx	xxxxx		xxxx	xxxx	xxxxx	xxxx	xxxx	xxxxx		xxxx	876	xxxxx						
SharedQueue:	xxxxx	xxxx	xxxxx		0.0	xxxx	xxxxx	xxxxx	xxxx	xxxxx		xxxxx	0.1	xxxxx						
Shrd ConDel:	xxxxx	xxxx	xxxxx		7.6	xxxx	xxxxx	xxxxx	xxxx	xxxxx		xxxxx	9.3	xxxxx						
Shared LOS:	*	*	*		A	*	*	*	*	*		*	A	*						
ApproachDel:		xxxxxx				xxxxxx				xxxxxx			9.3							
ApproachLOS:		*				*				*			A							

Note: Queue reported is the number of cars per lane.

Overlook Parkway Extension
Future Alt 3 (Gates Opened - With Overlook)
AM Peak Hour

Level Of Service Computation Report
2000 HCM Operations Method (Future Volume Alternative)

Intersection #19 Trautwein Rd/John F. Kennedy Dr

Cycle (sec):	100	Critical Vol./Cap.(X):	1.104
Loss Time (sec):	16 (Y+R=4.0 sec)	Average Delay (sec/veh):	87.1
Optimal Cycle:	130	Level Of Service:	F

Street Name:	Trautwein Rd						John F. Kennedy Dr					
Approach:	North Bound			South Bound			East Bound			West Bound		
Movement:	L -	T -	R	L -	T -	R	L -	T -	R	L -	T -	R
Control:	Protected			Protected			Protected			Protected		
Rights:	Include			Ovl			Include			Include		
Min. Green:	7	7	7	7	7	7	7	7	7	7	7	7
Lanes:	1 0	2 0	1	1 0	2 0	1	2 0	1 0	1	1 0	0 1	0
Volume Module:												
Base Vol:	128	2160	81	9	793	758	785	91	90	122	108	71
Growth Adj:	1.00	1.00	1.00	1.00	1.00	1.00	1.00	1.00	1.00	1.00	1.00	1.00
Initial Bse:	128	2160	81	9	793	758	785	91	90	122	108	71
Added Vol:	0	0	0	0	0	0	0	0	0	0	0	0
PasserByVol:	0	0	0	0	0	0	0	0	0	0	0	0
Initial Fut:	128	2160	81	9	793	758	785	91	90	122	108	71
User Adj:	1.00	1.00	1.00	1.00	1.00	1.00	1.00	1.00	1.00	1.00	1.00	1.00
PHF Adj:	1.00	1.00	1.00	1.00	1.00	1.00	1.00	1.00	1.00	1.00	1.00	1.00
PHF Volume:	128	2160	81	9	793	758	785	91	90	122	108	71
Reduct Vol:	0	0	0	0	0	0	0	0	0	0	0	0
Reduced Vol:	128	2160	81	9	793	758	785	91	90	122	108	71
PCE Adj:	1.00	1.00	1.00	1.00	1.00	1.00	1.00	1.00	1.00	1.00	1.00	1.00
MLF Adj:	1.00	1.00	1.00	1.00	1.00	1.00	1.00	1.00	1.00	1.00	1.00	1.00
FinalVolume:	128	2160	81	9	793	758	785	91	90	122	108	71
Saturation Flow Module:												
Sat/Lane:	1900	1900	1900	1900	1900	1900	1900	1900	1900	1900	1900	1900
Adjustment:	0.95	0.95	0.85	0.95	0.95	0.85	0.92	1.00	0.85	0.95	0.94	0.94
Lanes:	1.00	2.00	1.00	1.00	2.00	1.00	2.00	1.00	1.00	1.00	0.60	0.40
Final Sat.:	1805	3610	1615	1805	3610	1615	3502	1900	1615	1805	1078	708
Capacity Analysis Module:												
Vol/Sat:	0.07	0.60	0.05	0.00	0.22	0.47	0.22	0.05	0.06	0.07	0.10	0.10
Crit Moves:		****		****			****				****	
Green/Cycle:	0.13	0.50	0.50	0.07	0.44	0.63	0.19	0.14	0.14	0.14	0.08	0.08
Volume/Cap:	0.56	1.20	0.10	0.07	0.50	0.75	1.20	0.35	0.41	0.50	1.20	1.20
Delay/Veh:	43.9	120	13.3	43.7	20.2	16.1	144.2	40.1	40.8	41.7	183	182.6
User DelAdj:	1.00	1.00	1.00	1.00	1.00	1.00	1.00	1.00	1.00	1.00	1.00	1.00
AdjDel/Veh:	43.9	120	13.3	43.7	20.2	16.1	144.2	40.1	40.8	41.7	183	182.6
LOS by Move:	D	F	B	D	C	B	F	D	D	D	F	F
HCM2kAvgQ:	4	60	1	0	9	17	24	3	3	4	12	12

Note: Queue reported is the number of cars per lane.

Traffix 7.9.0415 (c) 2007 Dowling Assoc. Licensed to MMA, LONG BEACH, CA

Overlook Parkway Extension
Future Alt 3 (Gates Opened - With Overlook)
AM Peak Hour

Level Of Service Computation Report
2000 HCM Operations Method (Future Volume Alternative)

Intersection #20 Washington St/Bradley St

Cycle (sec):	100	Critical Vol./Cap.(X):	0.812
Loss Time (sec):	12 (Y+R=4.0 sec)	Average Delay (sec/veh):	27.8
Optimal Cycle:	80	Level Of Service:	C

Street Name:	Washington St						Bradley St					
Approach:	North Bound			South Bound			East Bound			West Bound		
Movement:	L -	T -	R	L -	T -	R	L -	T -	R	L -	T -	R
Control:	Protected			Protected			Permitted			Permitted		
Rights:	Include			Include			Include			Include		
Min. Green:	7	7	7	7	7	7	7	7	7	7	7	7
Lanes:	1 0	1 1	0	1 0	1 1	0	0 0	1! 0	0	0 0	1! 0	0
Volume Module:												
Base Vol:	413	1785	24	58	591	14	15	31	212	35	70	168
Growth Adj:	1.00	1.00	1.00	1.00	1.00	1.00	1.00	1.00	1.00	1.00	1.00	1.00
Initial Bse:	413	1785	24	58	591	14	15	31	212	35	70	168
Added Vol:	0	0	0	0	0	0	0	0	0	0	0	0
PasserByVol:	0	0	0	0	0	0	0	0	0	0	0	0
Initial Fut:	413	1785	24	58	591	14	15	31	212	35	70	168
User Adj:	1.00	1.00	1.00	1.00	1.00	1.00	1.00	1.00	1.00	1.00	1.00	1.00
PHF Adj:	1.00	1.00	1.00	1.00	1.00	1.00	1.00	1.00	1.00	1.00	1.00	1.00
PHF Volume:	413	1785	24	58	591	14	15	31	212	35	70	168
Reduct Vol:	0	0	0	0	0	0	0	0	0	0	0	0
Reduced Vol:	413	1785	24	58	591	14	15	31	212	35	70	168
PCE Adj:	1.00	1.00	1.00	1.00	1.00	1.00	1.00	1.00	1.00	1.00	1.00	1.00
MLF Adj:	1.00	1.00	1.00	1.00	1.00	1.00	1.00	1.00	1.00	1.00	1.00	1.00
FinalVolume:	413	1785	24	58	591	14	15	31	212	35	70	168
Saturation Flow Module:												
Sat/Lane:	1900	1900	1900	1900	1900	1900	1900	1900	1900	1900	1900	1900
Adjustment:	0.95	0.95	0.95	0.95	0.95	0.95	0.86	0.86	0.86	0.80	0.80	0.80
Lanes:	1.00	1.97	0.03	1.00	1.95	0.05	0.06	0.12	0.82	0.13	0.26	0.61
Final Sat.:	1805	3555	48	1805	3516	83	95	197	1345	194	388	932
Capacity Analysis Module:												
Vol/Sat:	0.23	0.50	0.50	0.03	0.17	0.17	0.16	0.16	0.16	0.18	0.18	0.18
Crit Moves:		****		****							****	
Green/Cycle:	0.38	0.60	0.60	0.07	0.28	0.28	0.21	0.21	0.21	0.21	0.21	0.21
Volume/Cap:	0.60	0.84	0.84	0.46	0.60	0.60	0.74	0.74	0.74	0.84	0.84	0.84
Delay/Veh:	26.0	19.6	19.6	47.3	32.0	32.0	44.6	44.6	44.6	55.5	55.5	55.5
User DelAdj:	1.00	1.00	1.00	1.00	1.00	1.00	1.00	1.00	1.00	1.00	1.00	1.00
AdjDel/Veh:	26.0	19.6	19.6	47.3	32.0	32.0	44.6	44.6	44.6	55.5	55.5	55.5
LOS by Move:	C	B	B	D	C	C	D	D	D	E	E	E
HCM2kAvgQ:	11	26	26	2	9	9	9	9	9	11	11	11

Note: Queue reported is the number of cars per lane.

Traffix 7.9.0415 (c) 2007 Dowling Assoc. Licensed to MMA, LONG BEACH, CA

Overlook Parkway Extension
Future Alt 3 (Gates Opened - With Overlook)
AM Peak Hour

Level Of Service Computation Report
2000 HCM Operations Method (Future Volume Alternative)

Intersection #21 Alessandro Blvd/Via Vista Dr

Cycle (sec):	100	Critical Vol./Cap.(X):	0.880
Loss Time (sec):	16 (Y+R=4.0 sec)	Average Delay (sec/veh):	29.9
Optimal Cycle:	109	Level Of Service:	C

Street Name:	Alessandro Blvd								Via Vista Dr					
Approach:	North Bound			South Bound			East Bound			West Bound				
Movement:	L	T	R	L	T	R	L	T	R	L	T	R	L	T	R
Control:	Protected			Protected			Protected			Protected				
Rights:	Include			Include			Include			Include				
Min. Green:	7	7	7	7	7	7	7	7	7	7	7	7		
Lanes:	1 0	2 1	0	1 0	2 1	0	1 0	1 0	1	1 0	1 0	1		
Volume Module:														
Base Vol:	51	2723	7	27	1406	67	232	55	72	19	38	112		
Growth Adj:	1.00	1.00	1.00	1.00	1.00	1.00	1.00	1.00	1.00	1.00	1.00	1.00		
Initial Bse:	51	2723	7	27	1406	67	232	55	72	19	38	112		
Added Vol:	0	0	0	0	0	0	0	0	0	0	0	0		
PasserByVol:	0	0	0	0	0	0	0	0	0	0	0	0		
Initial Fut:	51	2723	7	27	1406	67	232	55	72	19	38	112		
User Adj:	1.00	1.00	1.00	1.00	1.00	1.00	1.00	1.00	1.00	1.00	1.00	1.00		
PHF Adj:	1.00	1.00	1.00	1.00	1.00	1.00	1.00	1.00	1.00	1.00	1.00	1.00		
PHF Volume:	51	2723	7	27	1406	67	232	55	72	19	38	112		
Reduct Vol:	0	0	0	0	0	0	0	0	0	0	0	0		
Reduced Vol:	51	2723	7	27	1406	67	232	55	72	19	38	112		
PCE Adj:	1.00	1.00	1.00	1.00	1.00	1.00	1.00	1.00	1.00	1.00	1.00	1.00		
MLF Adj:	1.00	1.00	1.00	1.00	1.00	1.00	1.00	1.00	1.00	1.00	1.00	1.00		
FinalVolume:	51	2723	7	27	1406	67	232	55	72	19	38	112		
Saturation Flow Module:														
Sat/Lane:	1900	1900	1900	1900	1900	1900	1900	1900	1900	1900	1900	1900		
Adjustment:	0.95	0.91	0.91	0.95	0.90	0.90	0.95	1.00	0.85	0.95	1.00	0.85		
Lanes:	1.00	2.99	0.01	1.00	2.86	0.14	1.00	1.00	1.00	1.00	1.00	1.00		
Final Sat.:	1805	5174	13	1805	4916	234	1805	1900	1615	1805	1900	1615		
Capacity Analysis Module:														
Vol/Sat:	0.03	0.53	0.53	0.01	0.29	0.29	0.13	0.03	0.04	0.01	0.02	0.07		
Crit Moves:		****			****		****					****		
Green/Cycle:	0.12	0.56	0.56	0.07	0.51	0.51	0.14	0.11	0.11	0.11	0.07	0.07		
Volume/Cap:	0.23	0.94	0.94	0.21	0.57	0.57	0.94	0.28	0.42	0.10	0.27	0.94		
Delay/Veh:	40.0	27.5	27.5	44.8	17.4	17.4	83.9	42.0	43.6	40.7	44.8	110.0		
User DelAdj:	1.00	1.00	1.00	1.00	1.00	1.00	1.00	1.00	1.00	1.00	1.00	1.00		
AdjDel/Veh:	40.0	27.5	27.5	44.8	17.4	17.4	83.9	42.0	43.6	40.7	44.8	110.0		
LOS by Move:	D	C	C	D	B	B	F	D	D	D	D	F		
HCM2kAvgQ:	2	34	34	1	12	12	11	2	3	1	1	6		

Note: Queue reported is the number of cars per lane.

Traffix 7.9.0415 (c) 2007 Dowling Assoc. Licensed to MMA, LONG BEACH, CA

Overlook Parkway Extension
Future Alt 3 (Gates Opened - With Overlook)
AM Peak Hour

Level Of Service Computation Report
2000 HCM 4-Way Stop Method (Future Volume Alternative)

Intersection #23 Mary St/Hawarden Dr

Cycle (sec):	100	Critical Vol./Cap.(X):	0.274
Loss Time (sec):	0 (Y+R=4.0 sec)	Average Delay (sec/veh):	8.5
Optimal Cycle:	0	Level Of Service:	A

Street Name:	Mary St								Hawarden Dr					
Approach:	North Bound			South Bound			East Bound			West Bound				
Movement:	L	T	R	L	T	R	L	T	R	L	T	R	L	T	R
Control:	Stop Sign			Stop Sign			Stop Sign			Stop Sign				
Rights:	Include			Include			Include			Include				
Min. Green:	7	7	7	7	7	7	7	7	7	7	7	7		
Lanes:	0 1	0 0	0	0 0	0 1	0	0 0	1! 0	0	0 0	0 0	0		
Volume Module:														
Base Vol:	4	222	0	0	59	33	114	0	1	0	0	0		
Growth Adj:	1.00	1.00	1.00	1.00	1.00	1.00	1.00	1.00	1.00	1.00	1.00	1.00		
Initial Bse:	4	222	0	0	59	33	114	0	1	0	0	0		
Added Vol:	0	0	0	0	0	0	0	0	0	0	0	0		
PasserByVol:	0	0	0	0	0	0	0	0	0	0	0	0		
Initial Fut:	4	222	0	0	59	33	114	0	1	0	0	0		
User Adj:	1.00	1.00	1.00	1.00	1.00	1.00	1.00	1.00	1.00	1.00	1.00	1.00		
PHF Adj:	1.00	1.00	1.00	1.00	1.00	1.00	1.00	1.00	1.00	1.00	1.00	1.00		
PHF Volume:	4	222	0	0	59	33	114	0	1	0	0	0		
Reduct Vol:	0	0	0	0	0	0	0	0	0	0	0	0		
Reduced Vol:	4	222	0	0	59	33	114	0	1	0	0	0		
PCE Adj:	1.00	1.00	1.00	1.00	1.00	1.00	1.00	1.00	1.00	1.00	1.00	1.00		
MLF Adj:	1.00	1.00	1.00	1.00	1.00	1.00	1.00	1.00	1.00	1.00	1.00	1.00		
FinalVolume:	4	222	0	0	59	33	114	0	1	0	0	0		
Saturation Flow Module:														
Adjustment:	1.00	1.00	1.00	1.00	1.00	1.00	1.00	1.00	1.00	1.00	1.00	1.00		
Lanes:	0.02	0.98	0.00	0.00	0.64	0.36	0.99	0.00	0.01	0.00	0.00	0.00		
Final Sat.:	15	810	0	0	534	298	714	0	6	0	0	0		
Capacity Analysis Module:														
Vol/Sat:	0.27	0.27	xxxx	xxxx	0.11	0.11	0.16	xxxx	0.16	xxxx	xxxx	xxxx		
Crit Moves:		****			****		****							
Delay/Veh:	8.8	8.8	0.0	0.0	7.7	7.7	8.6	0.0	8.6	0.0	0.0	0.0		
Delay Adj:	1.00	1.00	1.00	1.00	1.00	1.00	1.00	1.00	1.00	1.00	1.00	1.00		
AdjDel/Veh:	8.8	8.8	0.0	0.0	7.7	7.7	8.6	0.0	8.6	0.0	0.0	0.0		
LOS by Move:	A	A	*	*	A	A	A	*	A	*	*	*		
ApproachDel:	8.8			7.7			8.6			xxxxxx				
Delay Adj:	1.00			1.00			1.00			xxxxx				
ApprAdjDel:	8.8			7.7			8.6			xxxxxx				
LOS by Appr:	A			A			A			*				
AllWayAvgQ:	0.4	0.4	0.4	0.1	0.1	0.1	0.2	0.2	0.2	0.0	0.0	0.0		

Traffix 7.9.0415 (c) 2007 Dowling Assoc. Licensed to MMA, LONG BEACH, CA

Overlook Parkway Extension
Future Alt 3 (Gates Opened - With Overlook)
AM Peak Hour

Note: Queue reported is the number of cars per lane.

Overlook Parkway Extension
Future Alt 3 (Gates Opened - With Overlook)
AM Peak Hour

Level Of Service Computation Report
2000 HCM 4-Way Stop Method (Future Volume Alternative)

Intersection #24 Hawarden Dr/Overlook Pkwy

Cycle (sec):	100	Critical Vol./Cap.(X):	0.627
Loss Time (sec):	0 (Y+R=4.0 sec)	Average Delay (sec/veh):	15.0
Optimal Cycle:	0	Level Of Service:	C

Street Name:	Hawarden Dr						Overlook Pkwy					
Approach:	North Bound			South Bound			East Bound			West Bound		
Movement:	L - T - R			L - T - R			L - T - R			L - T - R		
Control:	Stop Sign			Stop Sign			Stop Sign			Stop Sign		
Rights:	Include			Include			Include			Include		
Min. Green:	7	7	7	7	7	7	7	7	7	7	7	7
Lanes:	0 0	1! 0	0	0 0	1! 0	0	1 0	1 1	0	1 0	1 1	0
Volume Module:												
Base Vol:	73	43	12	19	5	13	17	508	37	1	748	37
Growth Adj:	1.00	1.00	1.00	1.00	1.00	1.00	1.00	1.00	1.00	1.00	1.00	1.00
Initial Bse:	73	43	12	19	5	13	17	508	37	1	748	37
Added Vol:	0	0	0	0	0	0	0	0	0	0	0	0
PasserByVol:	0	0	0	0	0	0	0	0	0	0	0	0
Initial Fut:	73	43	12	19	5	13	17	508	37	1	748	37
User Adj:	1.00	1.00	1.00	1.00	1.00	1.00	1.00	1.00	1.00	1.00	1.00	1.00
PHF Adj:	1.00	1.00	1.00	1.00	1.00	1.00	1.00	1.00	1.00	1.00	1.00	1.00
PHF Volume:	73	43	12	19	5	13	17	508	37	1	748	37
Reduct Vol:	0	0	0	0	0	0	0	0	0	0	0	0
Reduced Vol:	73	43	12	19	5	13	17	508	37	1	748	37
PCE Adj:	1.00	1.00	1.00	1.00	1.00	1.00	1.00	1.00	1.00	1.00	1.00	1.00
MLF Adj:	1.00	1.00	1.00	1.00	1.00	1.00	1.00	1.00	1.00	1.00	1.00	1.00
FinalVolume:	73	43	12	19	5	13	17	508	37	1	748	37
Saturation Flow Module:												
Adjustment:	1.00	1.00	1.00	1.00	1.00	1.00	1.00	1.00	1.00	1.00	1.00	1.00
Lanes:	0.57	0.34	0.09	0.51	0.14	0.35	1.00	1.86	0.14	1.00	1.91	0.09
Final Sat.:	300	176	49	257	68	176	542	1109	81	569	1193	59
Capacity Analysis Module:												
Vol/Sat:	0.24	0.24	0.24	0.07	0.07	0.07	0.03	0.46	0.45	0.00	0.63	0.62
Crit Moves:		****			****			****			****	
Delay/Veh:	11.5	11.5	11.5	10.1	10.1	10.1	9.4	13.3	13.2	8.9	17.2	17.0
Delay Adj:	1.00	1.00	1.00	1.00	1.00	1.00	1.00	1.00	1.00	1.00	1.00	1.00
AdjDel/Veh:	11.5	11.5	11.5	10.1	10.1	10.1	9.4	13.3	13.2	8.9	17.2	17.0
LOS by Move:	B	B	B	B	B	B	A	B	B	A	C	C
ApproachDel:		11.5			10.1			13.2			17.2	
Delay Adj:		1.00			1.00			1.00			1.00	
ApprAdjDel:		11.5			10.1			13.2			17.2	
LOS by Appr:		B			B			B			C	
AllWayAvgQ:	0.3	0.3	0.3	0.1	0.1	0.1	0.0	0.8	0.8	0.0	1.6	1.5

Overlook Parkway Extension
Future Alt 3 (Gates Opened - With Overlook)
AM Peak Hour

Note: Queue reported is the number of cars per lane.

Overlook Parkway Extension
Future Alt 3 (Gates Opened - With Overlook)
AM Peak Hour

Level Of Service Computation Report
2000 HCM 4-Way Stop Method (Future Volume Alternative)

Intersection #25 Crystal View Ter/Berry Rd

Cycle (sec):	100	Critical Vol./Cap.(X):	0.290
Loss Time (sec):	0 (Y+R=4.0 sec)	Average Delay (sec/veh):	8.0
Optimal Cycle:	0	Level Of Service:	A

Street Name:	Crystal View Ter						Berry Rd					
Approach:	North Bound			South Bound			East Bound			West Bound		
Movement:	L	T	R	L	T	R	L	T	R	L	T	R
Control:	Stop Sign			Stop Sign			Stop Sign			Stop Sign		
Rights:	Include			Include			Include			Include		
Min. Green:	7	7	7	7	7	7	7	7	7	7	7	7
Lanes:	0 0	1! 0	0	0 1	0 0	0	0 0	0 1	0	0 0	1! 0	0
Volume Module:												
Base Vol:	4	69	208	21	15	0	0	2	8	41	2	20
Growth Adj:	1.00	1.00	1.00	1.00	1.00	1.00	1.00	1.00	1.00	1.00	1.00	1.00
Initial Bse:	4	69	208	21	15	0	0	2	8	41	2	20
Added Vol:	0	0	0	0	0	0	0	0	0	0	0	0
PasserByVol:	0	0	0	0	0	0	0	0	0	0	0	0
Initial Fut:	4	69	208	21	15	0	0	2	8	41	2	20
User Adj:	1.00	1.00	1.00	1.00	1.00	1.00	1.00	1.00	1.00	1.00	1.00	1.00
PHF Adj:	1.00	1.00	1.00	1.00	1.00	1.00	1.00	1.00	1.00	1.00	1.00	1.00
PHF Volume:	4	69	208	21	15	0	0	2	8	41	2	20
Reduct Vol:	0	0	0	0	0	0	0	0	0	0	0	0
Reduced Vol:	4	69	208	21	15	0	0	2	8	41	2	20
PCE Adj:	1.00	1.00	1.00	1.00	1.00	1.00	1.00	1.00	1.00	1.00	1.00	1.00
MLF Adj:	1.00	1.00	1.00	1.00	1.00	1.00	1.00	1.00	1.00	1.00	1.00	1.00
FinalVolume:	4	69	208	21	15	0	0	2	8	41	2	20
Saturation Flow Module:												
Adjustment:	1.00	1.00	1.00	1.00	1.00	1.00	1.00	1.00	1.00	1.00	1.00	1.00
Lanes:	0.01	0.25	0.74	0.58	0.42	0.00	0.00	0.20	0.80	0.65	0.03	0.32
Final Sat.:	14	238	718	463	331	0	0	163	653	495	24	242
Capacity Analysis Module:												
Vol/Sat:	0.29	0.29	0.29	0.05	0.05	xxxx	xxxx	0.01	0.01	0.08	0.08	0.08
Crit Moves:	****				****			****				****
Delay/Veh:	8.1	8.1	8.1	7.6	7.6	0.0	0.0	7.1	7.1	7.8	7.8	7.8
Delay Adj:	1.00	1.00	1.00	1.00	1.00	1.00	1.00	1.00	1.00	1.00	1.00	1.00
AdjDel/Veh:	8.1	8.1	8.1	7.6	7.6	0.0	0.0	7.1	7.1	7.8	7.8	7.8
LOS by Move:	A	A	A	A	A	*	*	A	A	A	A	A
ApproachDel:	8.1			7.6			7.1			7.8		
Delay Adj:	1.00			1.00			1.00			1.00		
ApprAdjDel:	8.1			7.6			7.1			7.8		
LOS by Appr:	A			A			A			A		
AllWayAvgQ:	0.4	0.4	0.4	0.0	0.0	0.0	0.0	0.0	0.0	0.1	0.1	0.1

Overlook Parkway Extension
Future Alt 3 (Gates Opened - With Overlook)
AM Peak Hour

Note: Queue reported is the number of cars per lane.

Overlook Parkway Extension
Future Alt 3 (Gates Opened - With Overlook)
AM Peak Hour

Level Of Service Computation Report
2000 HCM 4-Way Stop Method (Future Volume Alternative)

Intersection #26 Corinthian Wy/Berry Rd

Cycle (sec):	100	Critical Vol./Cap.(X):	0.276
Loss Time (sec):	0 (Y+R=4.0 sec)	Average Delay (sec/veh):	8.3
Optimal Cycle:	0	Level Of Service:	A

Street Name:	Corinthian Wy						Berry Rd					
Approach:	North Bound			South Bound			East Bound			West Bound		
Movement:	L	T	R	L	T	R	L	T	R	L	T	R
Control:	Stop Sign			Stop Sign			Stop Sign			Stop Sign		
Rights:	Include			Include			Include			Include		
Min. Green:	7	7	7	7	7	7	7	7	7	7	7	7
Lanes:	0 0 0 0 0			0 0 1! 0 0			0 1 0 0 0			0 0 0 1 0		
Volume Module:												
Base Vol:	0	0	0	2	0	31	223	11	0	0	28	36
Growth Adj:	1.00	1.00	1.00	1.00	1.00	1.00	1.00	1.00	1.00	1.00	1.00	1.00
Initial Bse:	0	0	0	2	0	31	223	11	0	0	28	36
Added Vol:	0	0	0	0	0	0	0	0	0	0	0	0
PasserByVol:	0	0	0	0	0	0	0	0	0	0	0	0
Initial Fut:	0	0	0	2	0	31	223	11	0	0	28	36
User Adj:	1.00	1.00	1.00	1.00	1.00	1.00	1.00	1.00	1.00	1.00	1.00	1.00
PHF Adj:	1.00	1.00	1.00	1.00	1.00	1.00	1.00	1.00	1.00	1.00	1.00	1.00
PHF Volume:	0	0	0	2	0	31	223	11	0	0	28	36
Reduct Vol:	0	0	0	0	0	0	0	0	0	0	0	0
Reduced Vol:	0	0	0	2	0	31	223	11	0	0	28	36
PCE Adj:	1.00	1.00	1.00	1.00	1.00	1.00	1.00	1.00	1.00	1.00	1.00	1.00
MLF Adj:	1.00	1.00	1.00	1.00	1.00	1.00	1.00	1.00	1.00	1.00	1.00	1.00
FinalVolume:	0	0	0	2	0	31	223	11	0	0	28	36
Saturation Flow Module:												
Adjustment:	1.00	1.00	1.00	1.00	1.00	1.00	1.00	1.00	1.00	1.00	1.00	1.00
Lanes:	0.00	0.00	0.00	0.06	0.00	0.94	0.95	0.05	0.00	0.00	0.44	0.56
Final Sat.:	0	0	0	52	0	802	809	40	0	0	402	517
Capacity Analysis Module:												
Vol/Sat:	xxxx	xxxx	xxxx	0.04	xxxx	0.04	0.28	0.28	xxxx	xxxx	0.07	0.07
Crit Moves:				****			****				****	
Delay/Veh:	0.0	0.0	0.0	7.1	0.0	7.1	8.8	8.8	0.0	0.0	7.1	7.1
Delay Adj:	1.00	1.00	1.00	1.00	1.00	1.00	1.00	1.00	1.00	1.00	1.00	1.00
AdjDel/Veh:	0.0	0.0	0.0	7.1	0.0	7.1	8.8	8.8	0.0	0.0	7.1	7.1
LOS by Move:	*	*	*	A	*	A	A	A	*	*	A	A
ApproachDel:	xxxxxx			7.1			8.8			7.1		
Delay Adj:	xxxxx			1.00			1.00			1.00		
ApprAdjDel:	xxxxxx			7.1			8.8			7.1		
LOS by Appr:	*			A			A			A		
AllWayAvgQ:	0.0	0.0	0.0	0.0	0.0	0.0	0.4	0.4	0.4	0.1	0.1	0.1

Overlook Parkway Extension
Future Alt 3 (Gates Opened - With Overlook)
AM Peak Hour

Note: Queue reported is the number of cars per lane.

Overlook Parkway Extension
Future Alt 3 (Gates Opened - With Overlook)
AM Peak Hour

Level Of Service Computation Report
2000 HCM Unsignalized Method (Future Volume Alternative)

Intersection #28 Orozco Dr/Overlook Pkwy

Average Delay (sec/veh): 1.3 Worst Case Level Of Service: D[32.9]

Street Name:	Orozco Dr									Overlook Pkwy								
Approach:	North Bound				South Bound				East Bound				West Bound					
Movement:	L	-	T	-	R	L	-	T	-	R	L	-	T	-	R	L	-	T	-	R
Control:	Stop Sign					Stop Sign					Uncontrolled					Uncontrolled				
Rights:	Include					Include					Include					Include				
Lanes:	0	0	1!	0	0	0	0	1!	0	0	1	0	1	1	0	1	0	1	1	0
Volume Module:																				
Base Vol:	8	4	4			36	2	2			19	511	4			3	733	118		
Growth Adj:	1.00	1.00	1.00			1.00	1.00	1.00			1.00	1.00	1.00			1.00	1.00	1.00		
Initial Bse:	8	4	4			36	2	2			19	511	4			3	733	118		
Added Vol:	0	0	0			0	0	0			0	0	0			0	0	0		
PasserByVol:	0	0	0			0	0	0			0	0	0			0	0	0		
Initial Fut:	8	4	4			36	2	2			19	511	4			3	733	118		
User Adj:	1.00	1.00	1.00			1.00	1.00	1.00			1.00	1.00	1.00			1.00	1.00	1.00		
PHF Adj:	1.00	1.00	1.00			1.00	1.00	1.00			1.00	1.00	1.00			1.00	1.00	1.00		
PHF Volume:	8	4	4			36	2	2			19	511	4			3	733	118		
Reduct Vol:	0	0	0			0	0	0			0	0	0			0	0	0		
FinalVolume:	8	4	4			36	2	2			19	511	4			3	733	118		
Critical Gap Module:																				
Critical Gp:	7.5	6.5	6.9			7.5	6.5	6.9			4.1	xxxx	xxxxx			4.1	xxxx	xxxxx		
FollowUpTim:	3.5	4.0	3.3			3.5	4.0	3.3			2.2	xxxx	xxxxx			2.2	xxxx	xxxxx		
Capacity Module:																				
Cnflict Vol:	925	1408	258			1094	1351	426			851	xxxx	xxxxx			515	xxxx	xxxxx		
Potent Cap.:	227	140	748			171	152	583			796	xxxx	xxxxx			1061	xxxx	xxxxx		
Move Cap.:	220	136	748			163	148	583			796	xxxx	xxxxx			1061	xxxx	xxxxx		
Volume/Cap:	0.04	0.03	0.01			0.22	0.01	0.00			0.02	xxxx	xxxx			0.00	xxxx	xxxx		
Level Of Service Module:																				
2Way95thQ:	xxxx	xxxx	xxxxx			xxxx	xxxx	xxxxx			0.1	xxxx	xxxxx			0.0	xxxx	xxxxx		
Control Del:	xxxxx	xxxx	xxxxx			xxxxx	xxxx	xxxxx			9.6	xxxx	xxxxx			8.4	xxxx	xxxxx		
LOS by Move:	*	*	*			*	*	*			A	*	*			A	*	*		
Movement:	LT	-	LTR	-	RT	LT	-	LTR	-	RT	LT	-	LTR	-	RT	LT	-	LTR	-	RT
Shared Cap.:	xxxx		225	xxxxx		xxxx		168	xxxxx		xxxx	xxxx	xxxxx			xxxx	xxxx	xxxxx		
SharedQueue:	xxxxx		0.2	xxxxx		xxxxx		0.9	xxxxx		xxxxx	xxxx	xxxxx			xxxxx	xxxx	xxxxx		
Shrd ConDel:	xxxxx		22.2	xxxxx		xxxxx		32.9	xxxxx		xxxxx	xxxx	xxxxx			xxxxx	xxxx	xxxxx		
Shared LOS:	*		C	*		*		D	*		*	*	*			*	*	*		
ApproachDel:	22.2					32.9					xxxxxx					xxxxxx				
ApproachLOS:	C					D					*					*				

Note: Queue reported is the number of cars per lane.

Overlook Parkway Extension
Future Alt 3 (Gates Opened - With Overlook)
AM Peak Hour

Level Of Service Computation Report
2000 HCM 4-Way Stop Method (Future Volume Alternative)

Intersection #51 Madison St/Victoria Ave (North)

Cycle (sec):	100	Critical Vol./Cap.(X):	0.657
Loss Time (sec):	0 (Y+R=4.0 sec)	Average Delay (sec/veh):	16.3
Optimal Cycle:	0	Level Of Service:	C

Street Name:	Madison St							Victoria Ave (North)					
Approach:	North Bound			South Bound			East Bound			West Bound			
Movement:	L	T	R	L	T	R	L	T	R	L	T	R	
Control:	Stop Sign			Stop Sign			Stop Sign			Stop Sign			
Rights:	Include			Include			Include			Include			
Min. Green:	7	7	7	7	7	7	7	7	7	7	7	7	
Lanes:	0 1	0	0 0	0 0	1	0 1	0 0	0	0 0	0 1	0	0 1	
Volume Module:													
Base Vol:	16	285	0	0	272	25	0	0	0	4	262	420	
Growth Adj:	1.00	1.00	1.00	1.00	1.00	1.00	1.00	1.00	1.00	1.00	1.00	1.00	
Initial Bse:	16	285	0	0	272	25	0	0	0	4	262	420	
Added Vol:	0	0	0	0	0	0	0	0	0	0	0	0	
PasserByVol:	0	0	0	0	0	0	0	0	0	0	0	0	
Initial Fut:	16	285	0	0	272	25	0	0	0	4	262	420	
User Adj:	1.00	1.00	1.00	1.00	1.00	1.00	1.00	1.00	1.00	1.00	1.00	1.00	
PHF Adj:	1.00	1.00	1.00	1.00	1.00	1.00	1.00	1.00	1.00	1.00	1.00	1.00	
PHF Volume:	16	285	0	0	272	25	0	0	0	4	262	420	
Reduct Vol:	0	0	0	0	0	0	0	0	0	0	0	0	
Reduced Vol:	16	285	0	0	272	25	0	0	0	4	262	420	
PCE Adj:	1.00	1.00	1.00	1.00	1.00	1.00	1.00	1.00	1.00	1.00	1.00	1.00	
MLF Adj:	1.00	1.00	1.00	1.00	1.00	1.00	1.00	1.00	1.00	1.00	1.00	1.00	
FinalVolume:	16	285	0	0	272	25	0	0	0	4	262	420	
Saturation Flow Module:													
Adjustment:	1.00	1.00	1.00	1.00	1.00	1.00	1.00	1.00	1.00	1.00	1.00	1.00	
Lanes:	0.05	0.95	0.00	0.00	1.00	1.00	0.00	0.00	0.00	0.02	0.98	1.00	
Final Sat.:	29	508	0	0	523	579	0	0	0	9	559	639	
Capacity Analysis Module:													
Vol/Sat:	0.56	0.56	xxxx	xxxx	0.52	0.04	xxxx	xxxx	xxxx	0.47	0.47	0.66	
Crit Moves:		****			****							****	
Delay/Veh:	17.2	17.2	0.0	0.0	15.9	8.9	0.0	0.0	0.0	14.1	14.1	17.7	
Delay Adj:	1.00	1.00	1.00	1.00	1.00	1.00	1.00	1.00	1.00	1.00	1.00	1.00	
AdjDel/Veh:	17.2	17.2	0.0	0.0	15.9	8.9	0.0	0.0	0.0	14.1	14.1	17.7	
LOS by Move:	C	C	*	*	C	A	*	*	*	B	B	C	
ApproachDel:	17.2				15.3		xxxxxx			16.3			
Delay Adj:	1.00				1.00		xxxxx			1.00			
ApprAdjDel:	17.2				15.3		xxxxxx			16.3			
LOS by Appr:	C				C		*			C			
AllWayAvgQ:	1.1	1.1	1.1	0.0	1.0	0.0	0.0	0.0	0.0	0.8	0.8	1.7	

Overlook Parkway Extension
Future Alt 3 (Gates Opened - With Overlook)
AM Peak Hour

Note: Queue reported is the number of cars per lane.

Overlook Parkway Extension
Future Alt 3 (Gates Opened - With Overlook)
AM Peak Hour

Level Of Service Computation Report
2000 HCM 4-Way Stop Method (Future Volume Alternative)

Intersection #52 Madison St/Victoria Ave (South)

Cycle (sec): 100 | Critical Vol./Cap.(X): 0.492
Loss Time (sec): 0 (Y+R=4.0 sec) | Average Delay (sec/veh): 12.1
Optimal Cycle: 0 | Level Of Service: B

Street Name:	Madison St							Victoria Ave (South)					
Approach:	North Bound			South Bound			East Bound			West Bound			
Movement:	L	- T	- R	L	- T	- R	L	- T	- R	L	- T	- R	
Control:	Stop Sign			Stop Sign			Stop Sign			Stop Sign			
Rights:	Include			Include			Include			Include			
Min. Green:	7	7	7	7	7	7	7	7	7	7	7	7	
Lanes:	0 0	0 1	0	0 1	0 0	0	0 0	1! 0	0	0 0	0 0	0	
Volume Module:													
Base Vol:	0	255	38	221	55	0	46	272	2	0	0	0	
Growth Adj:	1.00	1.00	1.00	1.00	1.00	1.00	1.00	1.00	1.00	1.00	1.00	1.00	
Initial Bse:	0	255	38	221	55	0	46	272	2	0	0	0	
Added Vol:	0	0	0	0	0	0	0	0	0	0	0	0	
PasserByVol:	0	0	0	0	0	0	0	0	0	0	0	0	
Initial Fut:	0	255	38	221	55	0	46	272	2	0	0	0	
User Adj:	1.00	1.00	1.00	1.00	1.00	1.00	1.00	1.00	1.00	1.00	1.00	1.00	
PHF Adj:	1.00	1.00	1.00	1.00	1.00	1.00	1.00	1.00	1.00	1.00	1.00	1.00	
PHF Volume:	0	255	38	221	55	0	46	272	2	0	0	0	
Reduct Vol:	0	0	0	0	0	0	0	0	0	0	0	0	
Reduced Vol:	0	255	38	221	55	0	46	272	2	0	0	0	
PCE Adj:	1.00	1.00	1.00	1.00	1.00	1.00	1.00	1.00	1.00	1.00	1.00	1.00	
MLF Adj:	1.00	1.00	1.00	1.00	1.00	1.00	1.00	1.00	1.00	1.00	1.00	1.00	
FinalVolume:	0	255	38	221	55	0	46	272	2	0	0	0	
Saturation Flow Module:													
Adjustment:	1.00	1.00	1.00	1.00	1.00	1.00	1.00	1.00	1.00	1.00	1.00	1.00	
Lanes:	0.00	0.87	0.13	0.80	0.20	0.00	0.14	0.85	0.01	0.00	0.00	0.00	
Final Sat.:	0	592	88	521	130	0	93	552	4	0	0	0	
Capacity Analysis Module:													
Vol/Sat:	xxxx	0.43	0.43	0.42	0.42	xxxx	0.49	0.49	0.49	xxxx	xxxx	xxxx	
Crit Moves:			****		****		****						
Delay/Veh:	0.0	11.6	11.6	11.9	11.9	0.0	12.8	12.8	12.8	0.0	0.0	0.0	
Delay Adj:	1.00	1.00	1.00	1.00	1.00	1.00	1.00	1.00	1.00	1.00	1.00	1.00	
AdjDel/Veh:	0.0	11.6	11.6	11.9	11.9	0.0	12.8	12.8	12.8	0.0	0.0	0.0	
LOS by Move:	*	B	B	B	B	*	B	B	B	*	*	*	
ApproachDel:		11.6			11.9			12.8			xxxxxx		
Delay Adj:		1.00			1.00			1.00			xxxxx		
ApprAdjDel:		11.6			11.9			12.8			xxxxxx		
LOS by Appr:		B			B			B			*		
AllWayAvgQ:	0.7	0.7	0.7	0.7	0.7	0.7	0.8	0.8	0.8	0.0	0.0	0.0	

Overlook Parkway Extension
Future Alt 3 (Gates Opened - With Overlook)
AM Peak Hour

Note: Queue reported is the number of cars per lane.

Overlook Parkway Extension
Future Alt 3 (Gates Opened - With Overlook)
AM Peak Hour

Level Of Service Computation Report
2000 HCM 4-Way Stop Method (Future Volume Alternative)

Intersection #81 Washington St/Victoria Ave (North)

Cycle (sec):	100	Critical Vol./Cap.(X):	1.506
Loss Time (sec):	0 (Y+R=4.0 sec)	Average Delay (sec/veh):	160.7
Optimal Cycle:	0	Level Of Service:	F

Street Name:	Washington St							Victoria Ave (North)					
Approach:	North Bound			South Bound			East Bound			West Bound			
Movement:	L	T	R	L	T	R	L	T	R	L	T	R	
Control:	Stop Sign			Stop Sign			Stop Sign			Stop Sign			
Rights:	Include			Include			Include			Include			
Min. Green:	7	7	7	7	7	7	7	7	7	7	7	7	
Lanes:	0 1	1	0 0	0 0	0 1	0	0 0	0 0	0	1 0	0 1	0	
Volume Module:													
Base Vol:	553	923	0	0	431	8	0	0	0	349	127	11	
Growth Adj:	1.00	1.00	1.00	1.00	1.00	1.00	1.00	1.00	1.00	1.00	1.00	1.00	
Initial Bse:	553	923	0	0	431	8	0	0	0	349	127	11	
Added Vol:	0	0	0	0	0	0	0	0	0	0	0	0	
PasserByVol:	0	0	0	0	0	0	0	0	0	0	0	0	
Initial Fut:	553	923	0	0	431	8	0	0	0	349	127	11	
User Adj:	1.00	1.00	1.00	1.00	1.00	1.00	1.00	1.00	1.00	1.00	1.00	1.00	
PHF Adj:	1.00	1.00	1.00	1.00	1.00	1.00	1.00	1.00	1.00	1.00	1.00	1.00	
PHF Volume:	553	923	0	0	431	8	0	0	0	349	127	11	
Reduct Vol:	0	0	0	0	0	0	0	0	0	0	0	0	
Reduced Vol:	553	923	0	0	431	8	0	0	0	349	127	11	
PCE Adj:	1.00	1.00	1.00	1.00	1.00	1.00	1.00	1.00	1.00	1.00	1.00	1.00	
MLF Adj:	1.00	1.00	1.00	1.00	1.00	1.00	1.00	1.00	1.00	1.00	1.00	1.00	
FinalVolume:	553	923	0	0	431	8	0	0	0	349	127	11	
Saturation Flow Module:													
Adjustment:	1.00	1.00	1.00	1.00	1.00	1.00	1.00	1.00	1.00	1.00	1.00	1.00	
Lanes:	0.75	1.25	0.00	0.00	0.98	0.02	0.00	0.00	0.00	1.00	0.92	0.08	
Final Sat.:	367	639	0	0	498	9	0	0	0	451	445	39	
Capacity Analysis Module:													
Vol/Sat:	1.51	1.44	xxxx	xxxx	0.87	0.87	xxxx	xxxx	xxxx	0.77	0.29	0.29	
Crit Moves:	****				****					****			
Delay/Veh:	257.6	230	0.0	0.0	40.3	40.3	0.0	0.0	0.0	32.9	13.1	13.1	
Delay Adj:	1.00	1.00	1.00	1.00	1.00	1.00	1.00	1.00	1.00	1.00	1.00	1.00	
AdjDel/Veh:	257.6	230	0.0	0.0	40.3	40.3	0.0	0.0	0.0	32.9	13.1	13.1	
LOS by Move:	F	F	*	*	E	E	*	*	*	D	B	B	
ApproachDel:	240.6				40.3		xxxxxx			27.3			
Delay Adj:	1.00				1.00		xxxxx			1.00			
ApprAdjDel:	240.6				40.3		xxxxxx			27.3			
LOS by Appr:	F				E		*			D			
AllWayAvgQ:	33.7	30.7	0.0	4.3	4.3	4.3	0.0	0.0	0.0	2.8	0.4	0.4	

Overlook Parkway Extension
Future Alt 3 (Gates Opened - With Overlook)
AM Peak Hour

Note: Queue reported is the number of cars per lane.

Overlook Parkway Extension
Future Alt 3 (Gates Opened - With Overlook)
AM Peak Hour

Level Of Service Computation Report
2000 HCM 4-Way Stop Method (Future Volume Alternative)

Intersection #82 Washington St/Victoria Ave (South)

Cycle (sec):	100	Critical Vol./Cap.(X):	1.530
Loss Time (sec):	0 (Y+R=4.0 sec)	Average Delay (sec/veh):	190.5
Optimal Cycle:	0	Level Of Service:	F

Street Name:	Washington St								Victoria Ave (South)								
Approach:	North Bound				South Bound				East Bound				West Bound				
Movement:	L	-	T	-	R	L	-	T	-	R	L	-	T	-	R	L	-	T	-	R
Control:	Stop Sign				Stop Sign				Stop Sign				Stop Sign				
Rights:	Include				Include				Include				Include				
Min. Green:	7	7	7		7	7	7		7	7	7		7	7	7		
Lanes:	0	0	2	0	1	0	1	0	0	0	0	1	0	0	1	0	0	0	0	0
Volume Module:																				
Base Vol:	0	1467	694			7	773		0		9	137	323			0		0		0
Growth Adj:	1.00	1.00	1.00			1.00	1.00		1.00		1.00	1.00	1.00			1.00		1.00		1.00
Initial Bse:	0	1467	694			7	773		0		9	137	323			0		0		0
Added Vol:	0	0	0			0	0		0		0	0	0			0		0		0
PasserByVol:	0	0	0			0	0		0		0	0	0			0		0		0
Initial Fut:	0	1467	694			7	773		0		9	137	323			0		0		0
User Adj:	1.00	1.00	1.00			1.00	1.00		1.00		1.00	1.00	1.00			1.00		1.00		1.00
PHF Adj:	1.00	1.00	1.00			1.00	1.00		1.00		1.00	1.00	1.00			1.00		1.00		1.00
PHF Volume:	0	1467	694			7	773		0		9	137	323			0		0		0
Reduct Vol:	0	0	0			0	0		0		0	0	0			0		0		0
Reduced Vol:	0	1467	694			7	773		0		9	137	323			0		0		0
PCE Adj:	1.00	1.00	1.00			1.00	1.00		1.00		1.00	1.00	1.00			1.00		1.00		1.00
MLF Adj:	1.00	1.00	1.00			1.00	1.00		1.00		1.00	1.00	1.00			1.00		1.00		1.00
FinalVolume:	0	1467	694			7	773		0		9	137	323			0		0		0
Saturation Flow Module:																				
Adjustment:	1.00	1.00	1.00			1.00	1.00		1.00		1.00	1.00	1.00			1.00		1.00		1.00
Lanes:	0.00	2.00	1.00			0.01	0.99		0.00		0.06	0.94	1.00			0.00		0.00		0.00
Final Sat.:	0	1021	567			5	505		0		25	386	448			0		0		0
Capacity Analysis Module:																				
Vol/Sat:	xxxx	1.44	1.22			1.53	1.53		xxxx		0.36	0.36	0.72			xxxx		xxxx		xxxx
Crit Moves:		****				****							****							
Delay/Veh:	0.0	227	137.5			267.7	268		0.0		16.2	16.2	29.0			0.0		0.0		0.0
Delay Adj:	1.00	1.00	1.00			1.00	1.00		1.00		1.00	1.00	1.00			1.00		1.00		1.00
AdjDel/Veh:	0.0	227	137.5			267.7	268		0.0		16.2	16.2	29.0			0.0		0.0		0.0
LOS by Move:	*	F	F			F	F		*		C	C	D			*		*		*
ApproachDel:	198.6					267.7					25.0					xxxxxx				
Delay Adj:	1.00					1.00					1.00					xxxxx				
ApprAdjDel:	198.6					267.7					25.0					xxxxxx				
LOS by Appr:	F					F					C					*				
AllWayAvgQ:	0.0	30.9	20.2			36.5	36.5		36.5		0.5	0.5	2.3			0.0		0.0		0.0

Overlook Parkway Extension
Future Alt 3 (Gates Opened - With Overlook)
AM Peak Hour

Note: Queue reported is the number of cars per lane.

Overlook Parkway Extension
Future Alt 3 (Gates Opened - With Overlook)
AM Peak Hour

Level Of Service Computation Report
2000 HCM 4-Way Stop Method (Future Volume Alternative)

Intersection #221 Mary St/Victoria Ave (North)

Cycle (sec):	100	Critical Vol./Cap.(X):	1.563
Loss Time (sec):	0 (Y+R=4.0 sec)	Average Delay (sec/veh):	160.3
Optimal Cycle:	0	Level Of Service:	F

Street Name:	Mary St							Victoria Ave (North)					
Approach:	North Bound			South Bound			East Bound			West Bound			
Movement:	L	T	R	L	T	R	L	T	R	L	T	R	
Control:	Stop Sign			Stop Sign			Stop Sign			Stop Sign			
Rights:	Include			Include			Include			Include			
Min. Green:	7	7	7	7	7	7	7	7	7	7	7	7	
Lanes:	0 1	0	0 0	0	0 1	0 1	0	0 0	0 0	0	0 1!	0 0	
Volume Module:													
Base Vol:	33	938	0	0	209	190	0	0	0	20	214	155	
Growth Adj:	1.00	1.00	1.00	1.00	1.00	1.00	1.00	1.00	1.00	1.00	1.00	1.00	
Initial Bse:	33	938	0	0	209	190	0	0	0	20	214	155	
Added Vol:	0	0	0	0	0	0	0	0	0	0	0	0	
PasserByVol:	0	0	0	0	0	0	0	0	0	0	0	0	
Initial Fut:	33	938	0	0	209	190	0	0	0	20	214	155	
User Adj:	1.00	1.00	1.00	1.00	1.00	1.00	1.00	1.00	1.00	1.00	1.00	1.00	
PHF Adj:	1.00	1.00	1.00	1.00	1.00	1.00	1.00	1.00	1.00	1.00	1.00	1.00	
PHF Volume:	33	938	0	0	209	190	0	0	0	20	214	155	
Reduct Vol:	0	0	0	0	0	0	0	0	0	0	0	0	
Reduced Vol:	33	938	0	0	209	190	0	0	0	20	214	155	
PCE Adj:	1.00	1.00	1.00	1.00	1.00	1.00	1.00	1.00	1.00	1.00	1.00	1.00	
MLF Adj:	1.00	1.00	1.00	1.00	1.00	1.00	1.00	1.00	1.00	1.00	1.00	1.00	
FinalVolume:	33	938	0	0	209	190	0	0	0	20	214	155	
Saturation Flow Module:													
Adjustment:	1.00	1.00	1.00	1.00	1.00	1.00	1.00	1.00	1.00	1.00	1.00	1.00	
Lanes:	0.03	0.97	0.00	0.00	1.00	1.00	0.00	0.00	0.00	0.05	0.55	0.40	
Final Sat.:	21	600	0	0	536	598	0	0	0	30	322	233	
Capacity Analysis Module:													
Vol/Sat:	1.56	1.56	xxxx	xxxx	0.39	0.32	xxxx	xxxx	xxxx	0.66	0.66	0.66	
Crit Moves:		****			****						****		
Delay/Veh:	277.3	277	0.0	0.0	13.4	11.3	0.0	0.0	0.0	20.0	20.0	20.0	
Delay Adj:	1.00	1.00	1.00	1.00	1.00	1.00	1.00	1.00	1.00	1.00	1.00	1.00	
AdjDel/Veh:	277.3	277	0.0	0.0	13.4	11.3	0.0	0.0	0.0	20.0	20.0	20.0	
LOS by Move:	F	F	*	*	B	B	*	*	*	C	C	C	
ApproachDel:	277.3				12.4		xxxxxx			20.0			
Delay Adj:	1.00				1.00		xxxxx			1.00			
ApprAdjDel:	277.3				12.4		xxxxxx			20.0			
LOS by Appr:	F				B		*			C			
AllWayAvgQ:	46.3	46.3	46.3	0.0	0.6	0.4	0.0	0.0	0.0	1.8	1.8	1.8	

Overlook Parkway Extension
Future Alt 3 (Gates Opened - With Overlook)
AM Peak Hour

Note: Queue reported is the number of cars per lane.

Overlook Parkway Extension
Future Alt 3 (Gates Opened - With Overlook)
AM Peak Hour

Level Of Service Computation Report
2000 HCM 4-Way Stop Method (Future Volume Alternative)

Intersection #222 Mary St/Victoria Ave (South)

Cycle (sec):	100	Critical Vol./Cap.(X):	1.143
Loss Time (sec):	0 (Y+R=4.0 sec)	Average Delay (sec/veh):	59.0
Optimal Cycle:	0	Level Of Service:	F

Street Name:	Mary St							Victoria Ave (South)					
Approach:	North Bound			South Bound			East Bound			West Bound			
Movement:	L	T	R	L	T	R	L	T	R	L	T	R	
Control:	Stop Sign			Stop Sign			Stop Sign			Stop Sign			
Rights:	Include			Include			Include			Include			
Min. Green:	7	7	7	7	7	7	7	7	7	7	7	7	
Lanes:	0 0	0	1 0	0 1	0	0 0	1 0	0	1 0	0 0	0	0 0	
Volume Module:													
Base Vol:	0	393	149	119	110	0	578	239	12	0	0	0	
Growth Adj:	1.00	1.00	1.00	1.00	1.00	1.00	1.00	1.00	1.00	1.00	1.00	1.00	
Initial Bse:	0	393	149	119	110	0	578	239	12	0	0	0	
Added Vol:	0	0	0	0	0	0	0	0	0	0	0	0	
PasserByVol:	0	0	0	0	0	0	0	0	0	0	0	0	
Initial Fut:	0	393	149	119	110	0	578	239	12	0	0	0	
User Adj:	1.00	1.00	1.00	1.00	1.00	1.00	1.00	1.00	1.00	1.00	1.00	1.00	
PHF Adj:	1.00	1.00	1.00	1.00	1.00	1.00	1.00	1.00	1.00	1.00	1.00	1.00	
PHF Volume:	0	393	149	119	110	0	578	239	12	0	0	0	
Reduct Vol:	0	0	0	0	0	0	0	0	0	0	0	0	
Reduced Vol:	0	393	149	119	110	0	578	239	12	0	0	0	
PCE Adj:	1.00	1.00	1.00	1.00	1.00	1.00	1.00	1.00	1.00	1.00	1.00	1.00	
MLF Adj:	1.00	1.00	1.00	1.00	1.00	1.00	1.00	1.00	1.00	1.00	1.00	1.00	
FinalVolume:	0	393	149	119	110	0	578	239	12	0	0	0	
Saturation Flow Module:													
Adjustment:	1.00	1.00	1.00	1.00	1.00	1.00	1.00	1.00	1.00	1.00	1.00	1.00	
Lanes:	0.00	0.73	0.27	0.52	0.48	0.00	1.00	0.95	0.05	0.00	0.00	0.00	
Final Sat.:	0	430	163	269	249	0	506	520	26	0	0	0	
Capacity Analysis Module:													
Vol/Sat:	xxxx	0.91	0.91	0.44	0.44	xxxx	1.14	0.46	0.46	xxxx	xxxx	xxxx	
Crit Moves:			****		****		****						
Delay/Veh:	0.0	43.1	43.1	15.1	15.1	0.0	110.5	14.8	14.8	0.0	0.0	0.0	
Delay Adj:	1.00	1.00	1.00	1.00	1.00	1.00	1.00	1.00	1.00	1.00	1.00	1.00	
AdjDel/Veh:	0.0	43.1	43.1	15.1	15.1	0.0	110.5	14.8	14.8	0.0	0.0	0.0	
LOS by Move:	*	E	E	C	C	*	F	B	B	*	*	*	
ApproachDel:		43.1			15.1			81.5			xxxxxx		
Delay Adj:		1.00			1.00			1.00			xxxxx		
ApprAdjDel:		43.1			15.1			81.5			xxxxxx		
LOS by Appr:		E			C			F			*		
AllWayAvgQ:	5.6	5.6	5.6	0.7	0.7	0.7	14.1	0.8	0.8	0.0	0.0	0.0	

Overlook Parkway Extension
Future Alt 3 (Gates Opened - With Overlook)
AM Peak Hour

Note: Queue reported is the number of cars per lane.

Overlook Parkway Extension
Future Alt 3 (Gates Opened - With Overlook)
PM Peak Hour

Scenario Report

Scenario:	Future Alt 3 PM
Command:	Future Alt 3 PM
Volume:	Future Alt 3 PM
Geometry:	Future
Impact Fee:	Default Impact Fee
Trip Generation:	none
Trip Distribution:	none
Paths:	Default Path
Routes:	Default Route
Configuration:	Future Alt 3 PM

Traffix 7.9.0415 (c) 2007 Dowling Assoc. Licensed to MMA, LONG BEACH, CA

Overlook Parkway Extension
Future Alt 3 (Gates Opened - With Overlook)
PM Peak Hour

Impact Analysis Report
Level Of Service

Intersection	Base LOS	Base Del/ Veh	Base V/ C	Future LOS	Future Del/ Veh	Future V/ C	Change in
# 1 Madison St/SR-91 WB Ramps	C	34.5	0.836	C	34.5	0.836	+ 0.000 D/V
# 2 Madison St/SR-91 EB Ramps	E	68.0	1.125	E	68.0	1.125	+ 0.000 D/V
# 3 Madison St/Indiana Ave	F	173.2	1.445	F	173.2	1.445	+ 0.000 D/V
# 4 Madison St/Lincoln Ave	C	34.3	0.714	C	34.3	0.714	+ 0.000 D/V
# 6 Washington St/Indiana Ave	D	35.8	0.913	D	35.8	0.913	+ 0.000 D/V
# 7 Washington St/Lincoln Ave	F	183.0	1.508	F	183.0	1.508	+ 0.000 V/C
# 9 Washington St/Overlook Pkwy	E	75.6	1.138	E	75.6	1.138	+ 0.000 D/V
# 10 Riverside Ave-SR-91 WB/Arlingt	E	66.8	1.088	E	66.8	1.088	+ 0.000 D/V
# 11 Indiana Ave-SR-91 EB/Arlington	C	34.9	0.974	C	34.9	0.974	+ 0.000 D/V
# 12 Victoria Ave/Arlington Ave	E	62.6	1.059	E	62.6	1.059	+ 0.000 D/V
# 13 Alessandro Blvd/Arlington Ave	F	96.3	1.171	F	96.3	1.171	+ 0.000 D/V
# 14 Alessandro Blvd/Overlook Pkwy	F	310.5	1.918	F	310.5	1.918	+ 0.000 D/V
# 15 Alessandro Blvd/Trautwein Rd	D	39.0	0.976	D	39.0	0.976	+ 0.000 D/V
# 16 Crystal View Ter/Overlook Pkwy	E	49.6	1.005	E	49.6	1.005	+ 0.000 V/C
# 17 Kingdom Dr/Overlook Pkwy	F	610.4	0.000	F	610.4	0.000	+ 0.000 D/V
# 18 Kingdom Dr/Green Orchard Pl	A	9.1	0.000	A	9.1	0.000	+ 0.000 D/V
# 19 Trautwein Rd/John F. Kennedy D	C	31.8	0.909	C	31.8	0.909	+ 0.000 D/V
# 20 Washington St/Bradley St	D	52.2	1.013	D	52.2	1.013	+ 0.000 D/V
# 21 Alessandro Blvd/Via Vista Dr	D	36.3	0.939	D	36.3	0.939	+ 0.000 D/V
# 23 Mary St/Hawarden Dr	A	9.5	0.450	A	9.5	0.450	+ 0.000 V/C
# 24 Hawarden Dr/Overlook Pkwy	E	35.6	0.933	E	35.6	0.933	+ 0.000 V/C
# 25 Crystal View Ter/Berry Rd	B	10.9	0.467	B	10.9	0.467	+ 0.000 V/C
# 26 Corinthian Wy/Berry Rd	B	10.9	0.486	B	10.9	0.486	+ 0.000 V/C

Traffix 7.9.0415 (c) 2007 Dowling Assoc. Licensed to MMA, LONG BEACH, CA

Overlook Parkway Extension
Future Alt 3 (Gates Opened - With Overlook)
PM Peak Hour

Intersection	Base LOS	Base Veh Del/ C	Base V/ C	Future LOS	Future Veh Del/ C	Future V/ C	Change in
# 28 Orozco Dr/Overlook Pkwy	F	781.0	0.000	F	781.0	0.000	+ 0.000 D/V
# 51 Madison St/Victoria Ave (North	F	182.2	1.707	F	182.2	1.707	+ 0.000 V/C
# 52 Madison St/Victoria Ave (South	F	149.0	1.477	F	149.0	1.477	+ 0.000 V/C
# 81 Washington St/Victoria Ave (No	F	190.7	1.543	F	190.7	1.543	+ 0.000 V/C
# 82 Washington St/Victoria Ave (So	F	432.3	2.945	F	432.3	2.945	+ 0.000 V/C
#221 Mary St/Victoria Ave (North)	F	113.2	1.314	F	113.2	1.314	+ 0.000 V/C
#222 Mary St/Victoria Ave (South)	F	100.1	1.368	F	100.1	1.368	+ 0.000 V/C

Traffix 7.9.0415 (c) 2007 Dowling Assoc. Licensed to MMA, LONG BEACH, CA

Overlook Parkway Extension
Future Alt 3 (Gates Opened - With Overlook)
PM Peak Hour

Level Of Service Computation Report
2000 HCM Operations Method (Future Volume Alternative)

Intersection #1 Madison St/SR-91 WB Ramps

Cycle (sec): 100 Critical Vol./Cap.(X): 0.836
Loss Time (sec): 12 (Y+R=4.0 sec) Average Delay (sec/veh): 34.5
Optimal Cycle: 86 Level Of Service: C

Street Name:	Madison St						SR-91 WB Ramps					
Approach:	North Bound			South Bound			East Bound			West Bound		
Movement:	L -	T -	R	L -	T -	R	L -	T -	R	L -	T -	R
Control:	Protected			Protected			Split Phase			Split Phase		
Rights:	Include			Include			Include			Include		
Min. Green:	7	7	7	7	7	7	7	7	7	7	7	7
Lanes:	1 0	2 0	0	0 0	3 0	1	0 0	0 0	0	0 1	0 0	1
Volume Module:												
Base Vol:	485	970	0	0	1045	173	0	0	0	446	2	152
Growth Adj:	1.00	1.00	1.00	1.00	1.00	1.00	1.00	1.00	1.00	1.00	1.00	1.00
Initial Bse:	485	970	0	0	1045	173	0	0	0	446	2	152
Added Vol:	0	0	0	0	0	0	0	0	0	0	0	0
PasserByVol:	0	0	0	0	0	0	0	0	0	0	0	0
Initial Fut:	485	970	0	0	1045	173	0	0	0	446	2	152
User Adj:	1.00	1.00	1.00	1.00	1.00	1.00	1.00	1.00	1.00	1.00	1.00	1.00
PHF Adj:	1.00	1.00	1.00	1.00	1.00	1.00	1.00	1.00	1.00	1.00	1.00	1.00
PHF Volume:	485	970	0	0	1045	173	0	0	0	446	2	152
Reduct Vol:	0	0	0	0	0	0	0	0	0	0	0	0
Reduced Vol:	485	970	0	0	1045	173	0	0	0	446	2	152
PCE Adj:	1.00	1.00	1.00	1.00	1.00	1.00	1.00	1.00	1.00	1.00	1.00	1.00
MLF Adj:	1.00	1.00	1.00	1.00	1.00	1.00	1.00	1.00	1.00	1.00	1.00	1.00
FinalVolume:	485	970	0	0	1045	173	0	0	0	446	2	152
Saturation Flow Module:												
Sat/Lane:	1900	1900	1900	1900	1900	1900	1900	1900	1900	1900	1900	1900
Adjustment:	0.95	0.95	1.00	1.00	0.91	0.85	1.00	1.00	1.00	0.89	0.89	0.85
Lanes:	1.00	2.00	0.00	0.00	3.00	1.00	0.00	0.00	0.00	0.99	0.01	1.00
Final Sat.:	1805	3610	0	0	5187	1615	0	0	0	1682	8	1615
Capacity Analysis Module:												
Vol/Sat:	0.27	0.27	0.00	0.00	0.20	0.11	0.00	0.00	0.00	0.27	0.27	0.09
Crit Moves:	****				****					****		
Green/Cycle:	0.32	0.45	0.00	0.00	0.24	0.24	0.00	0.00	0.00	0.32	0.32	0.32
Volume/Cap:	0.84	0.60	0.00	0.00	0.84	0.44	0.00	0.00	0.00	0.84	0.84	0.30
Delay/Veh:	41.7	21.6	0.0	0.0	41.1	33.1	0.0	0.0	0.0	42.7	42.7	26.0
User DelAdj:	1.00	1.00	1.00	1.00	1.00	1.00	1.00	1.00	1.00	1.00	1.00	1.00
AdjDel/Veh:	41.7	21.6	0.0	0.0	41.1	33.1	0.0	0.0	0.0	42.7	42.7	26.0
LOS by Move:	D	C	A	A	D	C	A	A	A	D	D	C
HCM2kAvgQ:	16	12	0	0	14	5	0	0	0	15	15	4

Note: Queue reported is the number of cars per lane.

Traffix 7.9.0415 (c) 2007 Dowling Assoc. Licensed to MMA, LONG BEACH, CA

Overlook Parkway Extension
Future Alt 3 (Gates Opened - With Overlook)
PM Peak Hour

Level Of Service Computation Report
2000 HCM Operations Method (Future Volume Alternative)

Intersection #2 Madison St/SR-91 EB Ramps

Cycle (sec):	100	Critical Vol./Cap.(X):	1.125
Loss Time (sec):	12 (Y+R=4.0 sec)	Average Delay (sec/veh):	68.0
Optimal Cycle:	130	Level Of Service:	E

Street Name:	Madison St						SR-91 EB Ramps					
Approach:	North Bound			South Bound			East Bound			West Bound		
Movement:	L - T - R			L - T - R			L - T - R			L - T - R		
Control:	Protected			Protected			Protected			Protected		
Rights:	Include			Include			Include			Include		
Min. Green:	7	7	7	7	7	7	7	7	7	7	7	7
Lanes:	0 0	3 0	1	1 0	2 0	0	0 1	0 0	1	0 0	0 0	0
Volume Module:												
Base Vol:	0	1164	615	196	1328	0	274	6	809	0	0	0
Growth Adj:	1.00	1.00	1.00	1.00	1.00	1.00	1.00	1.00	1.00	1.00	1.00	1.00
Initial Bse:	0	1164	615	196	1328	0	274	6	809	0	0	0
Added Vol:	0	0	0	0	0	0	0	0	0	0	0	0
PasserByVol:	0	0	0	0	0	0	0	0	0	0	0	0
Initial Fut:	0	1164	615	196	1328	0	274	6	809	0	0	0
User Adj:	1.00	1.00	1.00	1.00	1.00	1.00	1.00	1.00	1.00	1.00	1.00	1.00
PHF Adj:	1.00	1.00	1.00	1.00	1.00	1.00	1.00	1.00	1.00	1.00	1.00	1.00
PHF Volume:	0	1164	615	196	1328	0	274	6	809	0	0	0
Reduct Vol:	0	0	0	0	0	0	0	0	0	0	0	0
Reduced Vol:	0	1164	615	196	1328	0	274	6	809	0	0	0
PCE Adj:	1.00	1.00	1.00	1.00	1.00	1.00	1.00	1.00	1.00	1.00	1.00	1.00
MLF Adj:	1.00	1.00	1.00	1.00	1.00	1.00	1.00	1.00	1.00	1.00	1.00	1.00
FinalVolume:	0	1164	615	196	1328	0	274	6	809	0	0	0
Saturation Flow Module:												
Sat/Lane:	1900	1900	1900	1900	1900	1900	1900	1900	1900	1900	1900	1900
Adjustment:	1.00	0.91	0.85	0.95	0.95	1.00	0.96	0.96	0.85	1.00	1.00	1.00
Lanes:	0.00	3.00	1.00	1.00	2.00	0.00	0.98	0.02	1.00	0.00	0.00	0.00
Final Sat.:	0	5187	1615	1805	3610	0	1789	39	1615	0	0	0
Capacity Analysis Module:												
Vol/Sat:	0.00	0.22	0.38	0.11	0.37	0.00	0.15	0.15	0.50	0.00	0.00	0.00
Crit Moves:			****	****					****			
Green/Cycle:	0.00	0.34	0.34	0.10	0.36	0.00	0.35	0.45	0.45	0.00	0.00	0.00
Volume/Cap:	0.00	0.66	1.13	1.13	1.01	0.00	0.43	0.34	1.13	0.00	0.00	0.00
Delay/Veh:	0.0	29.2	110.9	151.0	58.6	0.0	25.1	18.4	101.4	0.0	0.0	0.0
User DelAdj:	1.00	1.00	1.00	1.00	1.00	1.00	1.00	1.00	1.00	1.00	1.00	1.00
AdjDel/Veh:	0.0	29.2	110.9	151.0	58.6	0.0	25.1	18.4	101.4	0.0	0.0	0.0
LOS by Move:	A	C	F	F	E	A	C	B	F	A	A	A
HCM2kAvgQ:	0	12	31	12	29	0	7	6	40	0	0	0

Note: Queue reported is the number of cars per lane.

Traffix 7.9.0415 (c) 2007 Dowling Assoc. Licensed to MMA, LONG BEACH, CA

Overlook Parkway Extension
Future Alt 3 (Gates Opened - With Overlook)
PM Peak Hour

Level Of Service Computation Report
2000 HCM Operations Method (Future Volume Alternative)

Intersection #3 Madison St/Indiana Ave

Cycle (sec):	100	Critical Vol./Cap.(X):	1.445
Loss Time (sec):	16 (Y+R=4.0 sec)	Average Delay (sec/veh):	173.2
Optimal Cycle:	130	Level Of Service:	F

Street Name:	Madison St						Indiana Ave					
Approach:	North Bound			South Bound			East Bound			West Bound		
Movement:	L - T - R			L - T - R			L - T - R			L - T - R		
Control:	Protected			Protected			Protected			Protected		
Rights:	Include			Include			Include			Include		
Min. Green:	7	7	7	7	7	7	7	7	7	7	7	7
Lanes:	1 0	1 1	0	1 0	1 1	0	1 0	1 1	0	1 0	1 1	0
Volume Module:												
Base Vol:	109	792	51	647	1172	313	417	697	101	53	499	642
Growth Adj:	1.00	1.00	1.00	1.00	1.00	1.00	1.00	1.00	1.00	1.00	1.00	1.00
Initial Bse:	109	792	51	647	1172	313	417	697	101	53	499	642
Added Vol:	0	0	0	0	0	0	0	0	0	0	0	0
PasserByVol:	0	0	0	0	0	0	0	0	0	0	0	0
Initial Fut:	109	792	51	647	1172	313	417	697	101	53	499	642
User Adj:	1.00	1.00	1.00	1.00	1.00	1.00	1.00	1.00	1.00	1.00	1.00	1.00
PHF Adj:	1.00	1.00	1.00	1.00	1.00	1.00	1.00	1.00	1.00	1.00	1.00	1.00
PHF Volume:	109	792	51	647	1172	313	417	697	101	53	499	642
Reduct Vol:	0	0	0	0	0	0	0	0	0	0	0	0
Reduced Vol:	109	792	51	647	1172	313	417	697	101	53	499	642
PCE Adj:	1.00	1.00	1.00	1.00	1.00	1.00	1.00	1.00	1.00	1.00	1.00	1.00
MLF Adj:	1.00	1.00	1.00	1.00	1.00	1.00	1.00	1.00	1.00	1.00	1.00	1.00
FinalVolume:	109	792	51	647	1172	313	417	697	101	53	499	642
Saturation Flow Module:												
Sat/Lane:	1900	1900	1900	1900	1900	1900	1900	1900	1900	1900	1900	1900
Adjustment:	0.95	0.94	0.94	0.95	0.92	0.92	0.95	0.93	0.93	0.95	0.87	0.87
Lanes:	1.00	1.88	0.12	1.00	1.58	0.42	1.00	1.75	0.25	1.00	1.00	1.00
Final Sat.:	1805	3361	216	1805	2758	737	1805	3093	448	1805	1653	1653
Capacity Analysis Module:												
Vol/Sat:	0.06	0.24	0.24	0.36	0.42	0.42	0.23	0.23	0.23	0.03	0.30	0.39
Crit Moves:		****		****			****					****
Green/Cycle:	0.07	0.16	0.16	0.25	0.34	0.34	0.16	0.33	0.33	0.10	0.27	0.27
Volume/Cap:	0.86	1.44	1.44	1.44	1.25	1.25	1.44	0.69	0.69	0.29	1.12	1.44
Delay/Veh:	87.7	251	251.4	249.9	150	150.5	260.6	31.0	31.0	42.5	105	243.7
User DelAdj:	1.00	1.00	1.00	1.00	1.00	1.00	1.00	1.00	1.00	1.00	1.00	1.00
AdjDel/Veh:	87.7	251	251.4	249.9	150	150.5	260.6	31.0	31.0	42.5	105	243.7
LOS by Move:	F	F	F	F	F	F	F	C	C	D	F	F
HCM2kAvgQ:	6	32	32	46	45	45	30	12	12	2	27	48

Note: Queue reported is the number of cars per lane.

Traffix 7.9.0415 (c) 2007 Dowling Assoc. Licensed to MMA, LONG BEACH, CA

Overlook Parkway Extension
Future Alt 3 (Gates Opened - With Overlook)
PM Peak Hour

Level Of Service Computation Report
2000 HCM Operations Method (Future Volume Alternative)

Intersection #4 Madison St/Lincoln Ave

Cycle (sec):	100	Critical Vol./Cap.(X):	0.714
Loss Time (sec):	16 (Y+R=4.0 sec)	Average Delay (sec/veh):	34.3
Optimal Cycle:	71	Level Of Service:	C

Street Name:	Madison St						Lincoln Ave					
Approach:	North Bound			South Bound			East Bound			West Bound		
Movement:	L -	T -	R	L -	T -	R	L -	T -	R	L -	T -	R
Control:	Protected			Protected			Protected			Protected		
Rights:	Include			Include			Include			Include		
Min. Green:	7	7	7	7	7	7	7	7	7	7	7	7
Lanes:	1 0	1 1	0	1 0	1 1	0	1 0	0 1	0	1 0	1 1	0
Volume Module:												
Base Vol:	83	458	9	66	797	253	288	328	121	10	229	53
Growth Adj:	1.00	1.00	1.00	1.00	1.00	1.00	1.00	1.00	1.00	1.00	1.00	1.00
Initial Bse:	83	458	9	66	797	253	288	328	121	10	229	53
Added Vol:	0	0	0	0	0	0	0	0	0	0	0	0
PasserByVol:	0	0	0	0	0	0	0	0	0	0	0	0
Initial Fut:	83	458	9	66	797	253	288	328	121	10	229	53
User Adj:	1.00	1.00	1.00	1.00	1.00	1.00	1.00	1.00	1.00	1.00	1.00	1.00
PHF Adj:	1.00	1.00	1.00	1.00	1.00	1.00	1.00	1.00	1.00	1.00	1.00	1.00
PHF Volume:	83	458	9	66	797	253	288	328	121	10	229	53
Reduct Vol:	0	0	0	0	0	0	0	0	0	0	0	0
Reduced Vol:	83	458	9	66	797	253	288	328	121	10	229	53
PCE Adj:	1.00	1.00	1.00	1.00	1.00	1.00	1.00	1.00	1.00	1.00	1.00	1.00
MLF Adj:	1.00	1.00	1.00	1.00	1.00	1.00	1.00	1.00	1.00	1.00	1.00	1.00
FinalVolume:	83	458	9	66	797	253	288	328	121	10	229	53
Saturation Flow Module:												
Sat/Lane:	1900	1900	1900	1900	1900	1900	1900	1900	1900	1900	1900	1900
Adjustment:	0.95	0.95	0.95	0.95	0.92	0.92	0.95	0.96	0.96	0.95	0.92	0.92
Lanes:	1.00	1.96	0.04	1.00	1.52	0.48	1.00	0.73	0.27	1.00	1.62	0.38
Final Sat.:	1805	3530	69	1805	2642	839	1805	1332	492	1805	2849	659
Capacity Analysis Module:												
Vol/Sat:	0.05	0.13	0.13	0.04	0.30	0.30	0.16	0.25	0.25	0.01	0.08	0.08
Crit Moves:	****				****			****		****		
Green/Cycle:	0.07	0.30	0.30	0.16	0.39	0.39	0.26	0.31	0.31	0.07	0.13	0.13
Volume/Cap:	0.66	0.44	0.44	0.23	0.78	0.78	0.62	0.78	0.78	0.08	0.62	0.62
Delay/Veh:	57.3	28.8	28.8	37.1	30.1	30.1	35.6	38.1	38.1	43.8	44.0	44.0
User DelAdj:	1.00	1.00	1.00	1.00	1.00	1.00	1.00	1.00	1.00	1.00	1.00	1.00
AdjDel/Veh:	57.3	28.8	28.8	37.1	30.1	30.1	35.6	38.1	38.1	43.8	44.0	44.0
LOS by Move:	E	C	C	D	C	C	D	D	D	D	D	D
HCM2kAvgQ:	4	6	6	2	17	17	9	14	14	0	5	5

Note: Queue reported is the number of cars per lane.

Traffix 7.9.0415 (c) 2007 Dowling Assoc. Licensed to MMA, LONG BEACH, CA

Overlook Parkway Extension
Future Alt 3 (Gates Opened - With Overlook)
PM Peak Hour

Level Of Service Computation Report
2000 HCM Operations Method (Future Volume Alternative)

Intersection #6 Washington St/Indiana Ave

Cycle (sec):	100	Critical Vol./Cap.(X):	0.913
Loss Time (sec):	12 (Y+R=4.0 sec)	Average Delay (sec/veh):	35.8
Optimal Cycle:	116	Level Of Service:	D

Street Name:	Washington St						Indiana Ave					
Approach:	North Bound			South Bound			East Bound			West Bound		
Movement:	L -	T -	R	L -	T -	R	L -	T -	R	L -	T -	R
Control:	Permitted			Permitted			Protected			Protected		
Rights:	Ovl			Include			Include			Include		
Min. Green:	7	7	7	7	7	7	7	7	7	7	7	7
Lanes:	1 0	0 1	0	1 0	0 1	0	1 0	1 1	0	1 0	1 1	0
Volume Module:												
Base Vol:	349	1	243	12	5	15	4	951	420	290	778	2
Growth Adj:	1.00	1.00	1.00	1.00	1.00	1.00	1.00	1.00	1.00	1.00	1.00	1.00
Initial Bse:	349	1	243	12	5	15	4	951	420	290	778	2
Added Vol:	0	0	0	0	0	0	0	0	0	0	0	0
PasserByVol:	0	0	0	0	0	0	0	0	0	0	0	0
Initial Fut:	349	1	243	12	5	15	4	951	420	290	778	2
User Adj:	1.00	1.00	1.00	1.00	1.00	1.00	1.00	1.00	1.00	1.00	1.00	1.00
PHF Adj:	1.00	1.00	1.00	1.00	1.00	1.00	1.00	1.00	1.00	1.00	1.00	1.00
PHF Volume:	349	1	243	12	5	15	4	951	420	290	778	2
Reduct Vol:	0	0	0	0	0	0	0	0	0	0	0	0
Reduced Vol:	349	1	243	12	5	15	4	951	420	290	778	2
PCE Adj:	1.00	1.00	1.00	1.00	1.00	1.00	1.00	1.00	1.00	1.00	1.00	1.00
MLF Adj:	1.00	1.00	1.00	1.00	1.00	1.00	1.00	1.00	1.00	1.00	1.00	1.00
FinalVolume:	349	1	243	12	5	15	4	951	420	290	778	2
Saturation Flow Module:												
Sat/Lane:	1900	1900	1900	1900	1900	1900	1900	1900	1900	1900	1900	1900
Adjustment:	0.75	0.85	0.85	0.43	0.89	0.89	0.95	0.91	0.91	0.95	0.95	0.95
Lanes:	1.00	0.01	0.99	1.00	0.25	0.75	1.00	1.39	0.61	1.00	1.99	0.01
Final Sat.:	1429	7	1610	823	422	1265	1805	2389	1055	1805	3601	9
Capacity Analysis Module:												
Vol/Sat:	0.24	0.15	0.15	0.01	0.01	0.01	0.00	0.40	0.40	0.16	0.22	0.22
Crit Moves:	****							****		****		
Green/Cycle:	0.27	0.27	0.44	0.27	0.27	0.27	0.15	0.44	0.44	0.18	0.46	0.46
Volume/Cap:	0.91	0.56	0.34	0.05	0.04	0.04	0.01	0.91	0.91	0.91	0.47	0.47
Delay/Veh:	61.1	33.3	18.5	27.3	27.2	27.2	36.2	35.2	35.2	69.6	18.6	18.6
User DelAdj:	1.00	1.00	1.00	1.00	1.00	1.00	1.00	1.00	1.00	1.00	1.00	1.00
AdjDel/Veh:	61.1	33.3	18.5	27.3	27.2	27.2	36.2	35.2	35.2	69.6	18.6	18.6
LOS by Move:	E	C	B	C	C	C	D	D	D	E	B	B
HCM2kAvgQ:	14	7	5	0	0	0	0	25	25	12	9	9

Note: Queue reported is the number of cars per lane.

Traffix 7.9.0415 (c) 2007 Dowling Assoc. Licensed to MMA, LONG BEACH, CA

Overlook Parkway Extension
Future Alt 3 (Gates Opened - With Overlook)
PM Peak Hour

Level Of Service Computation Report
2000 HCM 4-Way Stop Method (Future Volume Alternative)

Intersection #7 Washington St/Lincoln Ave

Cycle (sec):	100	Critical Vol./Cap.(X):	1.508
Loss Time (sec):	0 (Y+R=4.0 sec)	Average Delay (sec/veh):	183.0
Optimal Cycle:	0	Level Of Service:	F

Street Name:	Washington St					Lincoln Ave					
Approach:	North Bound			South Bound			East Bound			West Bound		
Movement:	L -	T -	R	L -	T -	R	L -	T -	R	L -	T -	R
Control:	Stop Sign			Stop Sign			Stop Sign			Stop Sign		
Rights:	Include			Include			Include			Include		
Min. Green:	7	7	7	7	7	7	7	7	7	7	7	7
Lanes:	0 0	1! 0	0	0 0	1! 0	0	0 0	1! 0	0	0 1	0 0	1
Volume Module:												
Base Vol:	106	528	36	46	612	44	16	296	94	36	152	18
Growth Adj:	1.00	1.00	1.00	1.00	1.00	1.00	1.00	1.00	1.00	1.00	1.00	1.00
Initial Bse:	106	528	36	46	612	44	16	296	94	36	152	18
Added Vol:	0	0	0	0	0	0	0	0	0	0	0	0
PasserByVol:	0	0	0	0	0	0	0	0	0	0	0	0
Initial Fut:	106	528	36	46	612	44	16	296	94	36	152	18
User Adj:	1.00	1.00	1.00	1.00	1.00	1.00	1.00	1.00	1.00	1.00	1.00	1.00
PHF Adj:	1.00	1.00	1.00	1.00	1.00	1.00	1.00	1.00	1.00	1.00	1.00	1.00
PHF Volume:	106	528	36	46	612	44	16	296	94	36	152	18
Reduct Vol:	0	0	0	0	0	0	0	0	0	0	0	0
Reduced Vol:	106	528	36	46	612	44	16	296	94	36	152	18
PCE Adj:	1.00	1.00	1.00	1.00	1.00	1.00	1.00	1.00	1.00	1.00	1.00	1.00
MLF Adj:	1.00	1.00	1.00	1.00	1.00	1.00	1.00	1.00	1.00	1.00	1.00	1.00
FinalVolume:	106	528	36	46	612	44	16	296	94	36	152	18
Saturation Flow Module:												
Adjustment:	1.00	1.00	1.00	1.00	1.00	1.00	1.00	1.00	1.00	1.00	1.00	1.00
Lanes:	0.16	0.79	0.05	0.07	0.87	0.06	0.04	0.73	0.23	0.19	0.81	1.00
Final Sat.:	73	366	25	30	406	29	18	329	104	74	311	420
Capacity Analysis Module:												
Vol/Sat:	1.44	1.44	1.44	1.51	1.51	1.51	0.90	0.90	0.90	0.49	0.49	0.04
Crit Moves:	****				****			****			****	
Delay/Veh:	233.3	233	233.3	260.6	261	260.6	49.1	49.1	49.1	20.0	20.0	11.4
Delay Adj:	1.00	1.00	1.00	1.00	1.00	1.00	1.00	1.00	1.00	1.00	1.00	1.00
AdjDel/Veh:	233.3	233	233.3	260.6	261	260.6	49.1	49.1	49.1	20.0	20.0	11.4
LOS by Move:	F	F	F	F	F	F	E	E	E	C	C	B
ApproachDel:	233.3			260.6			49.1			19.3		
Delay Adj:	1.00			1.00			1.00			1.00		
ApprAdjDel:	233.3			260.6			49.1			19.3		
LOS by Appr:	F			F			E			C		
AllWayAvgQ:	28.7	28.7	28.7	32.3	32.3	32.3	4.8	4.8	4.8	0.9	0.9	0.0

Traffix 7.9.0415 (c) 2007 Dowling Assoc. Licensed to MMA, LONG BEACH, CA

Overlook Parkway Extension
Future Alt 3 (Gates Opened - With Overlook)
PM Peak Hour

Note: Queue reported is the number of cars per lane.

Traffix 7.9.0415 (c) 2007 Dowling Assoc. Licensed to MMA, LONG BEACH, CA

Overlook Parkway Extension
Future Alt 3 (Gates Opened - With Overlook)
PM Peak Hour

Level Of Service Computation Report
2000 HCM Operations Method (Future Volume Alternative)

Intersection #9 Washington St/Overlook Pkwy

Cycle (sec):	100	Critical Vol./Cap.(X):	1.138
Loss Time (sec):	12 (Y+R=4.0 sec)	Average Delay (sec/veh):	75.6
Optimal Cycle:	130	Level Of Service:	E

Street Name:	Washington St								Overlook Pkwy								
Approach:	North Bound				South Bound				East Bound				West Bound				
Movement:	L	-	T	-	R	L	-	T	-	R	L	-	T	-	R	L	-	T	-	R	L	-	T	-	R
Control:	Protected					Protected					Protected					Protected				
Rights:	Include					Include					Include					Ovl				
Min. Green:	7	7	7			7	7	7			7	7	7			7	7	7		
Lanes:	0	0	1	1	0	1	0	2	0	0	0	0	0	0	0	1	0	0	0	1
Volume Module:																				
Base Vol:	0	1343		49	1074	1650		0		0	0		0		0	34		0	817	
Growth Adj:	1.00	1.00		1.00	1.00	1.00		1.00		1.00	1.00		1.00		1.00	1.00		1.00	1.00	
Initial Bse:	0	1343		49	1074	1650		0		0	0		0		0	34		0	817	
Added Vol:	0	0		0	0	0		0		0	0		0		0	0		0	0	
PasserByVol:	0	0		0	0	0		0		0	0		0		0	0		0	0	
Initial Fut:	0	1343		49	1074	1650		0		0	0		0		0	34		0	817	
User Adj:	1.00	1.00		1.00	1.00	1.00		1.00		1.00	1.00		1.00		1.00	1.00		1.00	1.00	
PHF Adj:	1.00	1.00		1.00	1.00	1.00		1.00		1.00	1.00		1.00		1.00	1.00		1.00	1.00	
PHF Volume:	0	1343		49	1074	1650		0		0	0		0		0	34		0	817	
Reduct Vol:	0	0		0	0	0		0		0	0		0		0	0		0	0	
Reduced Vol:	0	1343		49	1074	1650		0		0	0		0		0	34		0	817	
PCE Adj:	1.00	1.00		1.00	1.00	1.00		1.00		1.00	1.00		1.00		1.00	1.00		1.00	1.00	
MLF Adj:	1.00	1.00		1.00	1.00	1.00		1.00		1.00	1.00		1.00		1.00	1.00		1.00	1.00	
FinalVolume:	0	1343		49	1074	1650		0		0	0		0		0	34		0	817	
Saturation Flow Module:																				
Sat/Lane:	1900	1900		1900	1900	1900		1900		1900	1900		1900		1900	1900		1900	1900	
Adjustment:	1.00	0.95		0.95	0.95	0.95		1.00		1.00	1.00		1.00		1.00	0.95		1.00	0.85	
Lanes:	0.00	1.93		0.07	1.00	2.00		0.00		0.00	0.00		0.00		0.00	1.00		0.00	1.00	
Final Sat.:	0	3466		126	1805	3610		0		0	0		0		0	1805		0	1615	
Capacity Analysis Module:																				
Vol/Sat:	0.00	0.39		0.39	0.60	0.46		0.00		0.00	0.00		0.00		0.00	0.02		0.00	0.51	
Crit Moves:		****			****											****				
Green/Cycle:	0.00	0.32		0.32	0.49	0.70		0.00		0.00	0.00		0.00		0.00	0.07		0.00	0.56	
Volume/Cap:	0.00	1.21		1.21	1.21	0.65		0.00		0.00	0.00		0.00		0.00	0.27		0.00	0.90	
Delay/Veh:	0.0	138		138.1	131.8	8.8		0.0		0.0	0.0		0.0		0.0	45.2		0.0	31.7	
User DelAdj:	1.00	1.00		1.00	1.00	1.00		1.00		1.00	1.00		1.00		1.00	1.00		1.00	1.00	
AdjDel/Veh:	0.0	138		138.1	131.8	8.8		0.0		0.0	0.0		0.0		0.0	45.2		0.0	31.7	
LOS by Move:	A	F		F	F	A		A		A	A		A		A	D		A	C	
HCM2kAvgQ:	0	41		41	58	15		0		0	0		0		0	1		0	26	

Note: Queue reported is the number of cars per lane.

Traffix 7.9.0415 (c) 2007 Dowling Assoc. Licensed to MMA, LONG BEACH, CA

Overlook Parkway Extension
Future Alt 3 (Gates Opened - With Overlook)
PM Peak Hour

Level Of Service Computation Report
2000 HCM Operations Method (Future Volume Alternative)

Intersection #10 Riverside Ave-SR-91 WB/Arlington Ave

Cycle (sec):	100	Critical Vol./Cap.(X):	1.088
Loss Time (sec):	12 (Y+R=4.0 sec)	Average Delay (sec/veh):	66.8
Optimal Cycle:	130	Level Of Service:	E

Street Name:	Riverside Ave-SR-91 WB								Arlington Ave								
Approach:	North Bound				South Bound				East Bound				West Bound				
Movement:	L	-	T	-	R	L	-	T	-	R	L	-	T	-	R	L	-	T	-	R	L	-	T	-	R
Control:	Protected					Protected					Protected					Protected				
Rights:	Include					Ovl					Ignore					Ignore				
Min. Green:	7	7	7			7	7	7			7	7	7			7	7	7		
Lanes:	0	0	0	0	0	1	1	0	0	1	1	0	3	0	1	1	0	3	0	1
Volume Module:																				
Base Vol:	0	0		0	1010	70		470		36	1996		200		465	1154		194		
Growth Adj:	1.00	1.00		1.00	1.00	1.00		1.00		1.00	1.00		1.00		1.00	1.00		1.00		
Initial Bse:	0	0		0	1010	70		470		36	1996		200		465	1154		194		
Added Vol:	0	0		0	0	0		0		0	0		0		0	0		0		
PasserByVol:	0	0		0	0	0		0		0	0		0		0	0		0		
Initial Fut:	0	0		0	1010	70		470		36	1996		200		465	1154		194		
User Adj:	1.00	1.00		1.00	1.00	1.00		1.00		1.00	1.00		0.00		1.00	1.00		0.00		
PHF Adj:	1.00	1.00		1.00	1.00	1.00		1.00		1.00	1.00		0.00		1.00	1.00		0.00		
PHF Volume:	0	0		0	1010	70		470		36	1996		0		465	1154		0		
Reduct Vol:	0	0		0	0	0		0		0	0		0		0	0		0		
Reduced Vol:	0	0		0	1010	70		470		36	1996		0		465	1154		0		
PCE Adj:	1.00	1.00		1.00	1.00	1.00		1.00		1.00	1.00		0.00		1.00	1.00		0.00		
MLF Adj:	1.00	1.00		1.00	1.00	1.00		1.00		1.00	1.00		0.00		1.00	1.00		0.00		
FinalVolume:	0	0		0	1010	70		470		36	1996		0		465	1154		0		
Saturation Flow Module:																				
Sat/Lane:	1900	1900		1900	1900	1900		1900		1900	1900		1900		1900	1900		1900		
Adjustment:	1.00	1.00		1.00	0.90	0.90		0.85		0.95	0.91		1.00		0.95	0.91		1.00		
Lanes:	0.00	0.00		0.00	1.87	0.13		1.00		1.00	3.00		1.00		1.00	3.00		1.00		
Final Sat.:	0	0		0	3205	222		1615		1805	5187		1900		1805	5187		1900		
Capacity Analysis Module:																				
Vol/Sat:	0.00	0.00		0.00	0.32	0.32		0.29		0.02	0.38		0.00		0.26	0.22		0.00		
Crit Moves:					****						****				****					
Green/Cycle:	0.00	0.00		0.00	0.29	0.29		0.43		0.14	0.35		0.00		0.24	0.45		0.00		
Volume/Cap:	0.00	0.00		0.00	1.09	1.09		0.68		0.14	1.09		0.00		1.09	0.50		0.00		
Delay/Veh:	0.0	0.0		0.0	91.1	91.1		25.5		37.9	81.7		0.0		107.5	19.7		0.0		
User DelAdj:	1.00	1.00		1.00	1.00	1.00		1.00		1.00	1.00		1.00		1.00	1.00		1.00		
AdjDel/Veh:	0.0	0.0		0.0	91.1	91.1		25.5		37.9	81.7		0.0		107.5	19.7		0.0		
LOS by Move:	A	A		A	F	F		C		D	F		A		F	B		A		
HCM2kAvgQ:	0	0		0	26	26		12		1	34		0		23	9		0		

Note: Queue reported is the number of cars per lane.

Traffix 7.9.0415 (c) 2007 Dowling Assoc. Licensed to MMA, LONG BEACH, CA

Overlook Parkway Extension
Future Alt 3 (Gates Opened - With Overlook)
PM Peak Hour

Level Of Service Computation Report
2000 HCM Operations Method (Future Volume Alternative)

Intersection #11 Indiana Ave-SR-91 EB/Arlington Ave

Cycle (sec):	100	Critical Vol./Cap.(X):	0.974
Loss Time (sec):	12 (Y+R=4.0 sec)	Average Delay (sec/veh):	34.9
Optimal Cycle:	130	Level Of Service:	C

Street Name:	Indiana Ave-SR-91 EB						Arlington Ave					
Approach:	North Bound			South Bound			East Bound			West Bound		
Movement:	L -	T -	R	L -	T -	R	L -	T -	R	L -	T -	R
Control:	Protected			Protected			Protected			Protected		
Rights:	Ovl			Include			Ovl			Ignore		
Min. Green:	7	7	7	7	7	7	7	7	7	7	7	7
Lanes:	1 1	1 0	1	0 0	0 0	0	1 0	2 0	1	1 0	4 0	1
Volume Module:												
Base Vol:	208	180	505	0	0	0	349	1964	574	217	1738	166
Growth Adj:	1.00	1.00	1.00	1.00	1.00	1.00	1.00	1.00	1.00	1.00	1.00	1.00
Initial Bse:	208	180	505	0	0	0	349	1964	574	217	1738	166
Added Vol:	0	0	0	0	0	0	0	0	0	0	0	0
PasserByVol:	0	0	0	0	0	0	0	0	0	0	0	0
Initial Fut:	208	180	505	0	0	0	349	1964	574	217	1738	166
User Adj:	1.00	1.00	1.00	1.00	1.00	1.00	1.00	1.00	1.00	1.00	1.00	0.00
PHF Adj:	1.00	1.00	1.00	1.00	1.00	1.00	1.00	1.00	1.00	1.00	1.00	0.00
PHF Volume:	208	180	505	0	0	0	349	1964	574	217	1738	0
Reduct Vol:	0	0	0	0	0	0	0	0	0	0	0	0
Reduced Vol:	208	180	505	0	0	0	349	1964	574	217	1738	0
PCE Adj:	1.00	1.00	1.00	1.00	1.00	1.00	1.00	1.00	1.00	1.00	1.00	0.00
MLF Adj:	1.00	1.00	1.00	1.00	1.00	1.00	1.00	1.00	1.00	1.00	1.00	0.00
FinalVolume:	208	180	505	0	0	0	349	1964	574	217	1738	0
Saturation Flow Module:												
Sat/Lane:	1900	1900	1900	1900	1900	1900	1900	1900	1900	1900	1900	1900
Adjustment:	0.92	0.92	0.85	1.00	1.00	1.00	0.95	0.95	0.85	0.95	0.91	1.00
Lanes:	1.61	1.39	1.00	0.00	0.00	0.00	1.00	2.00	1.00	1.00	4.00	1.00
Final Sat.:	2801	2424	1615	0	0	0	1805	3610	1615	1805	6916	1900
Capacity Analysis Module:												
Vol/Sat:	0.07	0.07	0.31	0.00	0.00	0.00	0.19	0.54	0.36	0.12	0.25	0.00
Crit Moves:			****					****		****		
Green/Cycle:	0.14	0.20	0.32	0.00	0.00	0.00	0.30	0.56	0.70	0.12	0.39	0.00
Volume/Cap:	0.54	0.38	0.97	0.00	0.00	0.00	0.65	0.97	0.51	0.97	0.65	0.00
Delay/Veh:	41.0	35.0	66.2	0.0	0.0	0.0	33.5	35.6	7.5	96.2	25.8	0.0
User DelAdj:	1.00	1.00	1.00	1.00	1.00	1.00	1.00	1.00	1.00	1.00	1.00	1.00
AdjDel/Veh:	41.0	35.0	66.2	0.0	0.0	0.0	33.5	35.6	7.5	96.2	25.8	0.0
LOS by Move:	D	C	E	A	A	A	C	D	A	F	C	A
HCM2kAvgQ:	5	4	21	0	0	0	10	38	9	11	13	0

Note: Queue reported is the number of cars per lane.

Traffix 7.9.0415 (c) 2007 Dowling Assoc. Licensed to MMA, LONG BEACH, CA

Overlook Parkway Extension
Future Alt 3 (Gates Opened - With Overlook)
PM Peak Hour

Level Of Service Computation Report
2000 HCM Operations Method (Future Volume Alternative)

Intersection #12 Victoria Ave/Arlington Ave

Cycle (sec):	100	Critical Vol./Cap.(X):	1.059
Loss Time (sec):	16 (Y+R=4.0 sec)	Average Delay (sec/veh):	62.6
Optimal Cycle:	130	Level Of Service:	E

Street Name:	Victoria Ave						Arlington Ave					
Approach:	North Bound			South Bound			East Bound			West Bound		
Movement:	L -	T -	R	L -	T -	R	L -	T -	R	L -	T -	R
Control:	Protected			Protected			Protected			Protected		
Rights:	Ovl			Include			Include			Include		
Min. Green:	7	7	7	7	7	7	7	7	7	7	7	7
Lanes:	1 0	1 0	1	1 0	1 0	1	1 0	2 1	0	1 0	2 1	0
Volume Module:												
Base Vol:	8	259	338	370	326	222	251	2120	11	247	1501	223
Growth Adj:	1.00	1.00	1.00	1.00	1.00	1.00	1.00	1.00	1.00	1.00	1.00	1.00
Initial Bse:	8	259	338	370	326	222	251	2120	11	247	1501	223
Added Vol:	0	0	0	0	0	0	0	0	0	0	0	0
PasserByVol:	0	0	0	0	0	0	0	0	0	0	0	0
Initial Fut:	8	259	338	370	326	222	251	2120	11	247	1501	223
User Adj:	1.00	1.00	1.00	1.00	1.00	1.00	1.00	1.00	1.00	1.00	1.00	1.00
PHF Adj:	1.00	1.00	1.00	1.00	1.00	1.00	1.00	1.00	1.00	1.00	1.00	1.00
PHF Volume:	8	259	338	370	326	222	251	2120	11	247	1501	223
Reduct Vol:	0	0	0	0	0	0	0	0	0	0	0	0
Reduced Vol:	8	259	338	370	326	222	251	2120	11	247	1501	223
PCE Adj:	1.00	1.00	1.00	1.00	1.00	1.00	1.00	1.00	1.00	1.00	1.00	1.00
MLF Adj:	1.00	1.00	1.00	1.00	1.00	1.00	1.00	1.00	1.00	1.00	1.00	1.00
FinalVolume:	8	259	338	370	326	222	251	2120	11	247	1501	223
Saturation Flow Module:												
Sat/Lane:	1900	1900	1900	1900	1900	1900	1900	1900	1900	1900	1900	1900
Adjustment:	0.95	1.00	0.85	0.95	1.00	0.85	0.95	0.91	0.91	0.95	0.89	0.89
Lanes:	1.00	1.00	1.00	1.00	1.00	1.00	1.00	2.98	0.02	1.00	2.61	0.39
Final Sat.:	1805	1900	1615	1805	1900	1615	1805	5155	27	1805	4430	658
Capacity Analysis Module:												
Vol/Sat:	0.00	0.14	0.21	0.20	0.17	0.14	0.14	0.41	0.41	0.14	0.34	0.34
Crit Moves:		****		****				****		****		
Green/Cycle:	0.09	0.13	0.26	0.19	0.23	0.23	0.15	0.39	0.39	0.13	0.37	0.37
Volume/Cap:	0.05	1.06	0.81	1.06	0.75	0.60	0.92	1.06	1.06	1.06	0.92	0.92
Delay/Veh:	41.4	117	46.2	104.8	43.0	37.2	76.7	68.3	68.3	118.8	38.5	38.5
User DelAdj:	1.00	1.00	1.00	1.00	1.00	1.00	1.00	1.00	1.00	1.00	1.00	1.00
AdjDel/Veh:	41.4	117	46.2	104.8	43.0	37.2	76.7	68.3	68.3	118.8	38.5	38.5
LOS by Move:	D	F	D	F	D	D	E	E	E	F	D	D
HCM2kAvgQ:	0	14	12	18	11	7	11	35	35	13	23	23

Note: Queue reported is the number of cars per lane.

Traffix 7.9.0415 (c) 2007 Dowling Assoc. Licensed to MMA, LONG BEACH, CA

Overlook Parkway Extension
Future Alt 3 (Gates Opened - With Overlook)
PM Peak Hour

Level Of Service Computation Report
2000 HCM Operations Method (Future Volume Alternative)

Intersection #13 Alessandro Blvd/Arlington Ave

Cycle (sec):	100	Critical Vol./Cap.(X):	1.171
Loss Time (sec):	16 (Y+R=4.0 sec)	Average Delay (sec/veh):	96.3
Optimal Cycle:	130	Level Of Service:	F

Street Name:	Alessandro Blvd						Arlington Ave					
Approach:	North Bound			South Bound			East Bound			West Bound		
Movement:	L - T - R			L - T - R			L - T - R			L - T - R		
Control:	Protected			Protected			Protected			Protected		
Rights:	Ovl			Include			Ovl			Ovl		
Min. Green:	7	7	7	7	7	7	7	7	7	7	7	7
Lanes:	2 0	2 0	1	2 0	2 1	0	1 0	2 0	2	2 0	2 0	1
Volume Module:												
Base Vol:	1077	807	135	451	1397	28	77	997	1673	434	905	292
Growth Adj:	1.00	1.00	1.00	1.00	1.00	1.00	1.00	1.00	1.00	1.00	1.00	1.00
Initial Bse:	1077	807	135	451	1397	28	77	997	1673	434	905	292
Added Vol:	0	0	0	0	0	0	0	0	0	0	0	0
PasserByVol:	0	0	0	0	0	0	0	0	0	0	0	0
Initial Fut:	1077	807	135	451	1397	28	77	997	1673	434	905	292
User Adj:	1.00	1.00	1.00	1.00	1.00	1.00	1.00	1.00	1.00	1.00	1.00	1.00
PHF Adj:	1.00	1.00	1.00	1.00	1.00	1.00	1.00	1.00	1.00	1.00	1.00	1.00
PHF Volume:	1077	807	135	451	1397	28	77	997	1673	434	905	292
Reduct Vol:	0	0	0	0	0	0	0	0	0	0	0	0
Reduced Vol:	1077	807	135	451	1397	28	77	997	1673	434	905	292
PCE Adj:	1.00	1.00	1.00	1.00	1.00	1.00	1.00	1.00	1.00	1.00	1.00	1.00
MLF Adj:	1.00	1.00	1.00	1.00	1.00	1.00	1.00	1.00	1.00	1.00	1.00	1.00
FinalVolume:	1077	807	135	451	1397	28	77	997	1673	434	905	292
Saturation Flow Module:												
Sat/Lane:	1900	1900	1900	1900	1900	1900	1900	1900	1900	1900	1900	1900
Adjustment:	0.92	0.95	0.85	0.92	0.91	0.91	0.95	0.95	0.75	0.92	0.95	0.85
Lanes:	2.00	2.00	1.00	2.00	2.94	0.06	1.00	2.00	2.00	2.00	2.00	1.00
Final Sat.:	3502	3610	1615	3502	5070	102	1805	3610	2842	3502	3610	1615
Capacity Analysis Module:												
Vol/Sat:	0.31	0.22	0.08	0.13	0.28	0.28	0.04	0.28	0.59	0.12	0.25	0.18
Crit Moves:	****				****			****		****		
Green/Cycle:	0.26	0.32	0.42	0.18	0.24	0.24	0.07	0.24	0.50	0.11	0.27	0.45
Volume/Cap:	1.17	0.71	0.20	0.71	1.17	1.17	0.57	1.17	1.18	1.17	0.94	0.40
Delay/Veh:	125.3	32.2	18.4	42.0	124	124.0	50.5	127	113.8	146.5	52.0	18.9
User DelAdj:	1.00	1.00	1.00	1.00	1.00	1.00	1.00	1.00	1.00	1.00	1.00	1.00
AdjDel/Veh:	125.3	32.2	18.4	42.0	124	124.0	50.5	127	113.8	146.5	52.0	18.9
LOS by Move:	F	C	B	D	F	F	D	F	F	F	D	B
HCM2kAvgQ:	30	13	3	8	29	29	3	29	50	14	19	6

Note: Queue reported is the number of cars per lane.

Traffix 7.9.0415 (c) 2007 Dowling Assoc. Licensed to MMA, LONG BEACH, CA

Overlook Parkway Extension
Future Alt 3 (Gates Opened - With Overlook)
PM Peak Hour

Level Of Service Computation Report
2000 HCM Operations Method (Future Volume Alternative)

Intersection #14 Alessandro Blvd/Overlook Pkwy

Cycle (sec):	100	Critical Vol./Cap.(X):	1.918
Loss Time (sec):	16 (Y+R=4.0 sec)	Average Delay (sec/veh):	310.5
Optimal Cycle:	130	Level Of Service:	F

Street Name:	Alessandro Blvd						Overlook Pkwy					
Approach:	North Bound			South Bound			East Bound			West Bound		
Movement:	L - T - R			L - T - R			L - T - R			L - T - R		
Control:	Protected			Protected			Protected			Protected		
Rights:	Include			Include			Include			Include		
Min. Green:	7	7	7	7	7	7	7	7	7	7	7	7
Lanes:	1 0	3 0	1	1 0	2 1	0	1 0	1 1	0	2 0	1 1	0
Volume Module:												
Base Vol:	532	1667	695	16	2895	243	51	92	820	625	238	6
Growth Adj:	1.00	1.00	1.00	1.00	1.00	1.00	1.00	1.00	1.00	1.00	1.00	1.00
Initial Bse:	532	1667	695	16	2895	243	51	92	820	625	238	6
Added Vol:	0	0	0	0	0	0	0	0	0	0	0	0
PasserByVol:	0	0	0	0	0	0	0	0	0	0	0	0
Initial Fut:	532	1667	695	16	2895	243	51	92	820	625	238	6
User Adj:	1.00	1.00	1.00	1.00	1.00	1.00	1.00	1.00	1.00	1.00	1.00	1.00
PHF Adj:	1.00	1.00	1.00	1.00	1.00	1.00	1.00	1.00	1.00	1.00	1.00	1.00
PHF Volume:	532	1667	695	16	2895	243	51	92	820	625	238	6
Reduct Vol:	0	0	0	0	0	0	0	0	0	0	0	0
Reduced Vol:	532	1667	695	16	2895	243	51	92	820	625	238	6
PCE Adj:	1.00	1.00	1.00	1.00	1.00	1.00	1.00	1.00	1.00	1.00	1.00	1.00
MLF Adj:	1.00	1.00	1.00	1.00	1.00	1.00	1.00	1.00	1.00	1.00	1.00	1.00
FinalVolume:	532	1667	695	16	2895	243	51	92	820	625	238	6
Saturation Flow Module:												
Sat/Lane:	1900	1900	1900	1900	1900	1900	1900	1900	1900	1900	1900	1900
Adjustment:	0.95	0.91	0.85	0.95	0.90	0.90	0.95	0.82	0.82	0.92	0.95	0.95
Lanes:	1.00	3.00	1.00	1.00	2.77	0.23	1.00	1.00	1.00	2.00	1.95	0.05
Final Sat.:	1805	5187	1615	1805	4728	397	1805	1561	1561	3502	3507	88
Capacity Analysis Module:												
Vol/Sat:	0.29	0.32	0.43	0.01	0.61	0.61	0.03	0.06	0.53	0.18	0.07	0.07
Crit Moves:	****				****				****	****		
Green/Cycle:	0.15	0.40	0.40	0.07	0.32	0.32	0.18	0.27	0.27	0.09	0.18	0.18
Volume/Cap:	1.92	0.80	1.07	0.13	1.92	1.92	0.15	0.22	1.92	1.92	0.37	0.37
Delay/Veh:	468.4	28.5	84.6	44.1	449	449.2	34.5	28.0	457.0	469.5	36.1	36.1
User DelAdj:	1.00	1.00	1.00	1.00	1.00	1.00	1.00	1.00	1.00	1.00	1.00	1.00
AdjDel/Veh:	468.4	28.5	84.6	44.1	449	449.2	34.5	28.0	457.0	469.5	36.1	36.1
LOS by Move:	F	C	F	D	F	F	C	C	F	F	D	D
HCM2kAvgQ:	49	18	32	1	103	103	1	2	78	30	4	4

Note: Queue reported is the number of cars per lane.

Traffix 7.9.0415 (c) 2007 Dowling Assoc. Licensed to MMA, LONG BEACH, CA

Overlook Parkway Extension
Future Alt 3 (Gates Opened - With Overlook)
PM Peak Hour

Level Of Service Computation Report
2000 HCM Operations Method (Future Volume Alternative)

Intersection #15 Alessandro Blvd/Trautwein Rd

Cycle (sec):	100	Critical Vol./Cap.(X):	0.976
Loss Time (sec):	12 (Y+R=4.0 sec)	Average Delay (sec/veh):	39.0
Optimal Cycle:	130	Level Of Service:	D

Street Name:	Alessandro Blvd								Trautwein Rd								
Approach:	North Bound				South Bound				East Bound				West Bound				
Movement:	L	-	T	-	R	L	-	T	-	R	L	-	T	-	R	L	-	T	-	R	L	-	T	-	R
Control:	Protected					Protected					Protected					Protected				
Rights:	Include					Ignore					Ignore					Include				
Min. Green:	7	7	7			7	7	7			7	7	7			7	7	7		
Lanes:	2	0	3	0	0	0	0	3	0	1	3	0	0	0	1	0	0	0	0	0
Volume Module:																				
Base Vol:	318	1656		0		0	2527	1464		1475	0		361			0		0		0
Growth Adj:	1.00	1.00		1.00		1.00	1.00	1.00		1.00	1.00		1.00			1.00		1.00		1.00
Initial Bse:	318	1656		0		0	2527	1464		1475	0		361			0		0		0
Added Vol:	0	0		0		0	0	0		0	0		0			0		0		0
PasserByVol:	0	0		0		0	0	0		0	0		0			0		0		0
Initial Fut:	318	1656		0		0	2527	1464		1475	0		361			0		0		0
User Adj:	1.00	1.00		1.00		1.00	1.00	0.00		1.00	1.00		0.00			1.00		1.00		1.00
PHF Adj:	1.00	1.00		1.00		1.00	1.00	0.00		1.00	1.00		0.00			1.00		1.00		1.00
PHF Volume:	318	1656		0		0	2527	0		1475	0		0			0		0		0
Reduct Vol:	0	0		0		0	0	0		0	0		0			0		0		0
Reduced Vol:	318	1656		0		0	2527	0		1475	0		0			0		0		0
PCE Adj:	1.00	1.00		1.00		1.00	1.00	0.00		1.00	1.00		0.00			1.00		1.00		1.00
MLF Adj:	1.00	1.00		1.00		1.00	1.00	0.00		1.00	1.00		0.00			1.00		1.00		1.00
FinalVolume:	318	1656		0		0	2527	0		1475	0		0			0		0		0
Saturation Flow Module:																				
Sat/Lane:	1900	1900		1900		1900	1900	1900		1900	1900		1900			1900		1900		1900
Adjustment:	0.92	0.91		1.00		1.00	0.91	1.00		0.92	1.00		1.00			1.00		1.00		1.00
Lanes:	2.00	3.00		0.00		0.00	3.00	1.00		3.00	0.00		1.00			0.00		0.00		0.00
Final Sat.:	3502	5187		0		0	5187	1900		5253	0		1900			0		0		0
Capacity Analysis Module:																				
Vol/Sat:	0.09	0.32		0.00		0.00	0.49	0.00		0.28	0.00		0.00			0.00		0.00		0.00
Crit Moves:	****						****			****										
Green/Cycle:	0.09	0.49		0.00		0.00	0.50	0.00		0.29	0.00		0.00			0.00		0.00		0.00
Volume/Cap:	0.98	0.66		0.00		0.00	0.98	0.00		0.98	0.00		0.00			0.00		0.00		0.00
Delay/Veh:	88.4	20.1		0.0		0.0	37.0	0.0		52.9	0.0		0.0			0.0		0.0		0.0
User DelAdj:	1.00	1.00		1.00		1.00	1.00	1.00		1.00	1.00		1.00			1.00		1.00		1.00
AdjDel/Veh:	88.4	20.1		0.0		0.0	37.0	0.0		52.9	0.0		0.0			0.0		0.0		0.0
LOS by Move:	F	C		A		A	D	A		D	A		A			A		A		A
HCM2kAvgQ:	9	15		0		0	35	0		21	0		0			0		0		0

Note: Queue reported is the number of cars per lane.

Traffix 7.9.0415 (c) 2007 Dowling Assoc. Licensed to MMA, LONG BEACH, CA

Overlook Parkway Extension
Future Alt 3 (Gates Opened - With Overlook)
PM Peak Hour

Level Of Service Computation Report
2000 HCM 4-Way Stop Method (Future Volume Alternative)

Intersection #16 Crystal View Ter/Overlook Pkwy

Cycle (sec):	100	Critical Vol./Cap.(X):	1.005
Loss Time (sec):	0 (Y+R=4.0 sec)	Average Delay (sec/veh):	49.6
Optimal Cycle:	0	Level Of Service:	E

Street Name:	Crystal View Ter								Overlook Pkwy								
Approach:	North Bound				South Bound				East Bound				West Bound				
Movement:	L	-	T	-	R	L	-	T	-	R	L	-	T	-	R	L	-	T	-	R	L	-	T	-	R
Control:	Stop Sign					Stop Sign					Stop Sign					Stop Sign				
Rights:	Include					Include					Include					Include				
Min. Green:	7	7	7			7	7	7			7	7	7			7	7	7		
Lanes:	0	0	1!	0	0	0	0	1	0	0	1	0	1	1	0	1	0	1	1	0
Volume Module:																				
Base Vol:	40		0		12		0	2		0		1	956		252	16	1009			0
Growth Adj:	1.00	1.00		1.00		1.00	1.00	1.00		1.00	1.00		1.00		1.00	1.00	1.00			1.00
Initial Bse:	40		0		12		0	2		0		1	956		252	16	1009			0
Added Vol:	0		0		0		0	0		0		0	0		0	0	0			0
PasserByVol:	0		0		0		0	0		0		0	0		0	0	0			0
Initial Fut:	40		0		12		0	2		0		1	956		252	16	1009			0
User Adj:	1.00	1.00		1.00		1.00	1.00	1.00		1.00	1.00		1.00		1.00	1.00	1.00			1.00
PHF Adj:	1.00	1.00		1.00		1.00	1.00	1.00		1.00	1.00		1.00		1.00	1.00	1.00			1.00
PHF Volume:	40		0		12		0	2		0		1	956		252	16	1009			0
Reduct Vol:	0		0		0		0	0		0		0	0		0	0	0			0
Reduced Vol:	40		0		12		0	2		0		1	956		252	16	1009			0
PCE Adj:	1.00	1.00		1.00		1.00	1.00	1.00		1.00	1.00		1.00		1.00	1.00	1.00			1.00
MLF Adj:	1.00	1.00		1.00		1.00	1.00	1.00		1.00	1.00		1.00		1.00	1.00	1.00			1.00
FinalVolume:	40		0		12		0	2		0		1	956		252	16	1009			0
Saturation Flow Module:																				
Adjustment:	1.00	1.00		1.00		1.00	1.00	1.00		1.00	1.00		1.00		1.00	1.00	1.00			1.00
Lanes:	0.77	0.00		0.23		0.00	1.00	0.00		1.00	1.58		0.42		1.00	2.00				0.00
Final Sat.:	403		0		121		0	503		0	542		951		258	527	1137			0
Capacity Analysis Module:																				
Vol/Sat:	0.10	xxxx		0.10		xxxx	0.00	xxxx		0.00	1.01		0.98		0.03	0.89				xxxx
Crit Moves:	****						****				****					****				
Delay/Veh:	10.6	0.0		10.6		0.0	10.1	0.0		9.3	62.3		53.5		9.7	39.4				0.0
Delay Adj:	1.00	1.00		1.00		1.00	1.00	1.00		1.00	1.00		1.00		1.00	1.00				1.00
AdjDel/Veh:	10.6	0.0		10.6		0.0	10.1	0.0		9.3	62.3		53.5		9.7	39.4				0.0
LOS by Move:	B	*		B		*	B	*		A	F		F		A	E				*
ApproachDel:	10.6						10.1				60.4					39.0				
Delay Adj:	1.00						1.00				1.00					1.00				
ApprAdjDel:	10.6						10.1				60.4					39.0				
LOS by Appr:	B						B				F					E				
AllWayAvgQ:	0.1	0.1		0.1		0.0	0.0	0.0		0.0	9.6		7.7		0.0	4.8				4.8

Traffix 7.9.0415 (c) 2007 Dowling Assoc. Licensed to MMA, LONG BEACH, CA

Overlook Parkway Extension
Future Alt 3 (Gates Opened - With Overlook)
PM Peak Hour

Note: Queue reported is the number of cars per lane.

Overlook Parkway Extension
Future Alt 3 (Gates Opened - With Overlook)
PM Peak Hour

Level Of Service Computation Report
2000 HCM Unsignalized Method (Future Volume Alternative)

Intersection #17 Kingdom Dr/Overlook Pkwy

Average Delay (sec/veh): 39.0 Worst Case Level Of Service: F[610.4]

Street Name:	Kingdom Dr									Overlook Pkwy								
Approach:	North Bound				South Bound				East Bound				West Bound					
Movement:	L	-	T	-	R	L	-	T	-	R	L	-	T	-	R	L	-	T	-	R
Control:	Stop Sign					Stop Sign					Uncontrolled					Uncontrolled				
Rights:	Include					Include					Include					Include				
Lanes:	0	0	1!	0	0	1	0	0	0	0	1	0	1	1	0	1	0	1	1	0
Volume Module:																				
Base Vol:	56	0	95			4	0			0	0	1129		132		164	853			5
Growth Adj:	1.00	1.00	1.00			1.00	1.00			1.00	1.00	1.00		1.00		1.00	1.00			1.00
Initial Bse:	56	0	95			4	0			0	0	1129		132		164	853			5
Added Vol:	0	0	0			0	0			0	0	0		0		0	0			0
PasserByVol:	0	0	0			0	0			0	0	0		0		0	0			0
Initial Fut:	56	0	95			4	0			0	0	1129		132		164	853			5
User Adj:	1.00	1.00	1.00			1.00	1.00			1.00	1.00	1.00		1.00		1.00	1.00			1.00
PHF Adj:	1.00	1.00	1.00			1.00	1.00			1.00	1.00	1.00		1.00		1.00	1.00			1.00
PHF Volume:	56	0	95			4	0			0	0	1129		132		164	853			5
Reduct Vol:	0	0	0			0	0			0	0	0		0		0	0			0
FinalVolume:	56	0	95			4	0			0	0	1129		132		164	853			5
Critical Gap Module:																				
Critical Gp:	7.5	6.5	6.9			7.5	xxxx	xxxxx	xxxxx	xxxx	xxxxx			4.1	xxxx	xxxxx				
FollowUpTim:	3.5	4.0	3.3			3.5	xxxx	xxxxx	xxxxx	xxxx	xxxxx			2.2	xxxx	xxxxx				
Capacity Module:																				
Cnflict Vol:	1950	2381	631			1748	xxxx	xxxxx	xxxx	xxxx	xxxxx			1261	xxxx	xxxxx				
Potent Cap.:	40	35	429			56	xxxx	xxxxx	xxxx	xxxx	xxxxx			558	xxxx	xxxxx				
Move Cap.:	31	25	429			34	xxxx	xxxxx	xxxx	xxxx	xxxxx			558	xxxx	xxxxx				
Volume/Cap:	1.83	0.00	0.22			0.12	xxxx	xxxx	xxxx	xxxx	xxxx			0.29	xxxx	xxxx				
Level Of Service Module:																				
2Way95thQ:	xxxx	xxxx	xxxxx			0.4	xxxx	xxxxx	xxxx	xxxx	xxxxx			1.2	xxxx	xxxxx				
Control Del:	xxxxx	xxxx	xxxxx			125.6	xxxx	xxxxx	xxxxx	xxxx	xxxxx			14.1	xxxx	xxxxx				
LOS by Move:	*	*	*			F	*	*	*	*	*			B	*	*				
Movement:	LT	-	LTR	-	RT	LT	-	LTR	-	RT	LT	-	LTR	-	RT	LT	-	LTR	-	RT
Shared Cap.:	xxxx		73	xxxxx		xxxx	xxxx	xxxxx			xxxx	xxxx	xxxxx			xxxx	xxxx	xxxxx		
SharedQueue:	xxxxx		13.8	xxxxx		xxxxx	xxxx	xxxxx			xxxxx	xxxx	xxxxx			xxxxx	xxxx	xxxxx		
Shrd ConDel:	xxxxx		610	xxxxx		xxxxx	xxxx	xxxxx			xxxxx	xxxx	xxxxx			xxxxx	xxxx	xxxxx		
Shared LOS:	*		F	*		*	*	*			*	*	*			*	*	*		
ApproachDel:			610.4					125.6					xxxxxx					xxxxxx		
ApproachLOS:			F					F					*					*		

Note: Queue reported is the number of cars per lane.

Overlook Parkway Extension
Future Alt 3 (Gates Opened - With Overlook)
PM Peak Hour

Level Of Service Computation Report
2000 HCM Unsignalized Method (Future Volume Alternative)

Intersection #18 Kingdom Dr/Green Orchard Pl

Average Delay (sec/veh): 2.2 Worst Case Level Of Service: A[9.1]

Street Name:	Kingdom Dr						Green Orchard Pl					
Approach:	North Bound			South Bound			East Bound			West Bound		
Movement:	L - T - R			L - T - R			L - T - R			L - T - R		
Control:	Uncontrolled			Uncontrolled			Stop Sign			Stop Sign		
Rights:	Include			Include			Include			Include		
Lanes:	0 0 0 1 0			0 1 0 0 0			0 0 0 0 0			0 0 1! 0 0		
Volume Module:												
Base Vol:	0	123	8	94	190	0	0	0	0	1	0	30
Growth Adj:	1.00	1.00	1.00	1.00	1.00	1.00	1.00	1.00	1.00	1.00	1.00	1.00
Initial Bse:	0	123	8	94	190	0	0	0	0	1	0	30
Added Vol:	0	0	0	0	0	0	0	0	0	0	0	0
PasserByVol:	0	0	0	0	0	0	0	0	0	0	0	0
Initial Fut:	0	123	8	94	190	0	0	0	0	1	0	30
User Adj:	1.00	1.00	1.00	1.00	1.00	1.00	1.00	1.00	1.00	1.00	1.00	1.00
PHF Adj:	1.00	1.00	1.00	1.00	1.00	1.00	1.00	1.00	1.00	1.00	1.00	1.00
PHF Volume:	0	123	8	94	190	0	0	0	0	1	0	30
Reduct Vol:	0	0	0	0	0	0	0	0	0	0	0	0
FinalVolume:	0	123	8	94	190	0	0	0	0	1	0	30
Critical Gap Module:												
Critical Gp:	xxxxx	xxxx	xxxxx	4.1	xxxx	xxxxx	xxxxx	xxxx	xxxxx	6.4	6.5	6.2
FollowUpTim:	xxxxx	xxxx	xxxxx	2.2	xxxx	xxxxx	xxxxx	xxxx	xxxxx	3.5	4.0	3.3
Capacity Module:												
Cnflict Vol:	xxxx	xxxx	xxxxx	131	xxxx	xxxxx	xxxx	xxxx	xxxxx	505	505	127
Potent Cap.:	xxxx	xxxx	xxxxx	1467	xxxx	xxxxx	xxxx	xxxx	xxxxx	530	473	929
Move Cap.:	xxxx	xxxx	xxxxx	1467	xxxx	xxxxx	xxxx	xxxx	xxxxx	503	441	929
Volume/Cap:	xxxx	xxxx	xxxx	0.06	xxxx	xxxx	xxxx	xxxx	xxxx	0.00	0.00	0.03
Level Of Service Module:												
2Way95thQ:	xxxx	xxxx	xxxxx	0.2	xxxx	xxxxx	xxxx	xxxx	xxxxx	xxxx	xxxx	xxxxx
Control Del:	xxxxx	xxxx	xxxxx	7.6	xxxx	xxxxx	xxxxx	xxxx	xxxxx	xxxxx	xxxx	xxxxx
LOS by Move:	*	*	*	A	*	*	*	*	*	*	*	*
Movement:	LT -	LTR -	RT	LT -	LTR -	RT	LT -	LTR -	RT	LT -	LTR -	RT
Shared Cap.:	xxxx	xxxx	xxxxx	xxxx	xxxx	xxxxx	xxxx	xxxx	xxxxx	xxxx	904	xxxxx
SharedQueue:	xxxxx	xxxx	xxxxx	0.2	xxxx	xxxxx	xxxxx	xxxx	xxxxx	xxxxx	0.1	xxxxx
Shrd ConDel:	xxxxx	xxxx	xxxxx	7.6	xxxx	xxxxx	xxxxx	xxxx	xxxxx	xxxxx	9.1	xxxxx
Shared LOS:	*	*	*	A	*	*	*	*	*	*	A	*
ApproachDel:	xxxxxx			xxxxxx			xxxxxx				9.1	
ApproachLOS:	*			*			*				A	

Note: Queue reported is the number of cars per lane.

Traffix 7.9.0415 (c) 2007 Dowling Assoc. Licensed to MMA, LONG BEACH, CA

Overlook Parkway Extension
Future Alt 3 (Gates Opened - With Overlook)
PM Peak Hour

Level Of Service Computation Report
2000 HCM Operations Method (Future Volume Alternative)

Intersection #19 Trautwein Rd/John F. Kennedy Dr

Cycle (sec): 100 Critical Vol./Cap.(X): 0.909
Loss Time (sec): 16 (Y+R=4.0 sec) Average Delay (sec/veh): 31.8
Optimal Cycle: 120 Level Of Service: C

Street Name:	Trautwein Rd						John F. Kennedy Dr					
Approach:	North Bound			South Bound			East Bound			West Bound		
Movement:	L - T - R			L - T - R			L - T - R			L - T - R		
Control:	Protected			Protected			Protected			Protected		
Rights:	Include			Ovl			Include			Include		
Min. Green:	7	7	7	7	7	7	7	7	7	7	7	7
Lanes:	1 0 2 0 1			1 0 2 0 1			2 0 1 0 1			1 0 0 1 0		
Volume Module:												
Base Vol:	73	1409	91	60	1977	536	456	56	125	63	47	33
Growth Adj:	1.00	1.00	1.00	1.00	1.00	1.00	1.00	1.00	1.00	1.00	1.00	1.00
Initial Bse:	73	1409	91	60	1977	536	456	56	125	63	47	33
Added Vol:	0	0	0	0	0	0	0	0	0	0	0	0
PasserByVol:	0	0	0	0	0	0	0	0	0	0	0	0
Initial Fut:	73	1409	91	60	1977	536	456	56	125	63	47	33
User Adj:	1.00	1.00	1.00	1.00	1.00	1.00	1.00	1.00	1.00	1.00	1.00	1.00
PHF Adj:	1.00	1.00	1.00	1.00	1.00	1.00	1.00	1.00	1.00	1.00	1.00	1.00
PHF Volume:	73	1409	91	60	1977	536	456	56	125	63	47	33
Reduct Vol:	0	0	0	0	0	0	0	0	0	0	0	0
Reduced Vol:	73	1409	91	60	1977	536	456	56	125	63	47	33
PCE Adj:	1.00	1.00	1.00	1.00	1.00	1.00	1.00	1.00	1.00	1.00	1.00	1.00
MLF Adj:	1.00	1.00	1.00	1.00	1.00	1.00	1.00	1.00	1.00	1.00	1.00	1.00
FinalVolume:	73	1409	91	60	1977	536	456	56	125	63	47	33
Saturation Flow Module:												
Sat/Lane:	1900	1900	1900	1900	1900	1900	1900	1900	1900	1900	1900	1900
Adjustment:	0.95	0.95	0.85	0.95	0.95	0.85	0.92	1.00	0.85	0.95	0.94	0.94
Lanes:	1.00	2.00	1.00	1.00	2.00	1.00	2.00	1.00	1.00	1.00	0.59	0.41
Final Sat.:	1805	3610	1615	1805	3610	1615	3502	1900	1615	1805	1047	735
Capacity Analysis Module:												
Vol/Sat:	0.04	0.39	0.06	0.03	0.55	0.33	0.13	0.03	0.08	0.03	0.04	0.04
Crit Moves:	****				****		****				****	
Green/Cycle:	0.07	0.54	0.54	0.10	0.57	0.70	0.13	0.11	0.11	0.10	0.07	0.07
Volume/Cap:	0.58	0.72	0.10	0.34	0.97	0.47	0.97	0.27	0.72	0.36	0.64	0.64
Delay/Veh:	51.6	18.8	11.3	43.4	34.1	7.1	76.4	41.8	56.9	43.5	56.1	56.1
User DelAdj:	1.00	1.00	1.00	1.00	1.00	1.00	1.00	1.00	1.00	1.00	1.00	1.00
AdjDel/Veh:	51.6	18.8	11.3	43.4	34.1	7.1	76.4	41.8	56.9	43.5	56.1	56.1
LOS by Move:	D	B	B	D	C	A	E	D	E	D	E	E
HCM2kAvgQ:	3	18	1	2	37	8	11	2	5	2	4	4

Note: Queue reported is the number of cars per lane.

Traffix 7.9.0415 (c) 2007 Dowling Assoc. Licensed to MMA, LONG BEACH, CA

Overlook Parkway Extension
Future Alt 3 (Gates Opened - With Overlook)
PM Peak Hour

Level Of Service Computation Report
2000 HCM Operations Method (Future Volume Alternative)

Intersection #20 Washington St/Bradley St

Cycle (sec):	100	Critical Vol./Cap.(X):	1.013
Loss Time (sec):	12 (Y+R=4.0 sec)	Average Delay (sec/veh):	52.2
Optimal Cycle:	130	Level Of Service:	D

Street Name:	Washington St						Bradley St					
Approach:	North Bound			South Bound			East Bound			West Bound		
Movement:	L -	T -	R	L -	T -	R	L -	T -	R	L -	T -	R
Control:	Protected			Protected			Permitted			Permitted		
Rights:	Include			Include			Include			Include		
Min. Green:	7	7	7	7	7	7	7	7	7	7	7	7
Lanes:	1 0	1 1	0	1 0	1 1	0	0 0	1! 0	0	0 0	1! 0	0
Volume Module:												
Base Vol:	218	1212	43	200	1560	3	10	66	488	35	49	109
Growth Adj:	1.00	1.00	1.00	1.00	1.00	1.00	1.00	1.00	1.00	1.00	1.00	1.00
Initial Bse:	218	1212	43	200	1560	3	10	66	488	35	49	109
Added Vol:	0	0	0	0	0	0	0	0	0	0	0	0
PasserByVol:	0	0	0	0	0	0	0	0	0	0	0	0
Initial Fut:	218	1212	43	200	1560	3	10	66	488	35	49	109
User Adj:	1.00	1.00	1.00	1.00	1.00	1.00	1.00	1.00	1.00	1.00	1.00	1.00
PHF Adj:	1.00	1.00	1.00	1.00	1.00	1.00	1.00	1.00	1.00	1.00	1.00	1.00
PHF Volume:	218	1212	43	200	1560	3	10	66	488	35	49	109
Reduct Vol:	0	0	0	0	0	0	0	0	0	0	0	0
Reduced Vol:	218	1212	43	200	1560	3	10	66	488	35	49	109
PCE Adj:	1.00	1.00	1.00	1.00	1.00	1.00	1.00	1.00	1.00	1.00	1.00	1.00
MLF Adj:	1.00	1.00	1.00	1.00	1.00	1.00	1.00	1.00	1.00	1.00	1.00	1.00
FinalVolume:	218	1212	43	200	1560	3	10	66	488	35	49	109
Saturation Flow Module:												
Sat/Lane:	1900	1900	1900	1900	1900	1900	1900	1900	1900	1900	1900	1900
Adjustment:	0.95	0.95	0.95	0.95	0.95	0.95	0.88	0.88	0.88	0.71	0.71	0.71
Lanes:	1.00	1.93	0.07	1.00	1.99	0.01	0.02	0.12	0.86	0.18	0.25	0.57
Final Sat.:	1805	3469	123	1805	3603	7	30	195	1444	245	343	762
Capacity Analysis Module:												
Vol/Sat:	0.12	0.35	0.35	0.11	0.43	0.43	0.34	0.34	0.34	0.14	0.14	0.14
Crit Moves:	****				****			****				
Green/Cycle:	0.12	0.41	0.41	0.13	0.43	0.43	0.33	0.33	0.33	0.33	0.33	0.33
Volume/Cap:	1.01	0.84	0.84	0.84	1.01	1.01	1.01	1.01	1.01	0.43	0.43	0.43
Delay/Veh:	108.8	30.8	30.8	65.2	54.9	54.9	74.8	74.8	74.8	26.6	26.6	26.6
User DelAdj:	1.00	1.00	1.00	1.00	1.00	1.00	1.00	1.00	1.00	1.00	1.00	1.00
AdjDel/Veh:	108.8	30.8	30.8	65.2	54.9	54.9	74.8	74.8	74.8	26.6	26.6	26.6
LOS by Move:	F	C	C	E	D	D	E	E	E	C	C	C
HCM2kAvgQ:	11	21	21	9	34	34	25	25	25	5	5	5

Note: Queue reported is the number of cars per lane.

Traffix 7.9.0415 (c) 2007 Dowling Assoc. Licensed to MMA, LONG BEACH, CA

Overlook Parkway Extension
Future Alt 3 (Gates Opened - With Overlook)
PM Peak Hour

Level Of Service Computation Report
2000 HCM Operations Method (Future Volume Alternative)

Intersection #21 Alessandro Blvd/Via Vista Dr

Cycle (sec):	100	Critical Vol./Cap.(X):	0.939
Loss Time (sec):	16 (Y+R=4.0 sec)	Average Delay (sec/veh):	36.3
Optimal Cycle:	130	Level Of Service:	D

Street Name:	Alessandro Blvd						Via Vista Dr					
Approach:	North Bound			South Bound			East Bound			West Bound		
Movement:	L -	T -	R	L -	T -	R	L -	T -	R	L -	T -	R
Control:	Protected			Protected			Protected			Protected		
Rights:	Include			Include			Include			Include		
Min. Green:	7	7	7	7	7	7	7	7	7	7	7	7
Lanes:	1 0	2 1	0	1 0	2 1	0	1 0	1 0	1	1 0	1 0	1
Volume Module:												
Base Vol:	80	1734	9	87	3059	292	97	29	65	45	49	59
Growth Adj:	1.00	1.00	1.00	1.00	1.00	1.00	1.00	1.00	1.00	1.00	1.00	1.00
Initial Bse:	80	1734	9	87	3059	292	97	29	65	45	49	59
Added Vol:	0	0	0	0	0	0	0	0	0	0	0	0
PasserByVol:	0	0	0	0	0	0	0	0	0	0	0	0
Initial Fut:	80	1734	9	87	3059	292	97	29	65	45	49	59
User Adj:	1.00	1.00	1.00	1.00	1.00	1.00	1.00	1.00	1.00	1.00	1.00	1.00
PHF Adj:	1.00	1.00	1.00	1.00	1.00	1.00	1.00	1.00	1.00	1.00	1.00	1.00
PHF Volume:	80	1734	9	87	3059	292	97	29	65	45	49	59
Reduct Vol:	0	0	0	0	0	0	0	0	0	0	0	0
Reduced Vol:	80	1734	9	87	3059	292	97	29	65	45	49	59
PCE Adj:	1.00	1.00	1.00	1.00	1.00	1.00	1.00	1.00	1.00	1.00	1.00	1.00
MLF Adj:	1.00	1.00	1.00	1.00	1.00	1.00	1.00	1.00	1.00	1.00	1.00	1.00
FinalVolume:	80	1734	9	87	3059	292	97	29	65	45	49	59
Saturation Flow Module:												
Sat/Lane:	1900	1900	1900	1900	1900	1900	1900	1900	1900	1900	1900	1900
Adjustment:	0.95	0.91	0.91	0.95	0.90	0.90	0.95	1.00	0.85	0.95	1.00	0.85
Lanes:	1.00	2.98	0.02	1.00	2.74	0.26	1.00	1.00	1.00	1.00	1.00	1.00
Final Sat.:	1805	5155	27	1805	4673	446	1805	1900	1615	1805	1900	1615
Capacity Analysis Module:												
Vol/Sat:	0.04	0.34	0.34	0.05	0.65	0.65	0.05	0.02	0.04	0.02	0.03	0.04
Crit Moves:	****				****		****					****
Green/Cycle:	0.07	0.58	0.58	0.12	0.63	0.63	0.07	0.07	0.07	0.07	0.07	0.07
Volume/Cap:	0.63	0.58	0.58	0.40	1.04	1.04	0.77	0.22	0.57	0.36	0.37	0.52
Delay/Veh:	55.3	13.6	13.6	41.8	45.6	45.6	70.0	44.7	52.1	46.1	46.1	49.2
User DelAdj:	1.00	1.00	1.00	1.00	1.00	1.00	1.00	1.00	1.00	1.00	1.00	1.00
AdjDel/Veh:	55.3	13.6	13.6	41.8	45.6	45.6	70.0	44.7	52.1	46.1	46.1	49.2
LOS by Move:	E	B	B	D	D	D	E	D	D	D	D	D
HCM2kAvgQ:	4	13	13	3	50	50	5	1	3	2	2	3

Note: Queue reported is the number of cars per lane.

Traffix 7.9.0415 (c) 2007 Dowling Assoc. Licensed to MMA, LONG BEACH, CA

Overlook Parkway Extension
Future Alt 3 (Gates Opened - With Overlook)
PM Peak Hour

Level Of Service Computation Report
2000 HCM 4-Way Stop Method (Future Volume Alternative)

Intersection #23 Mary St/Hawarden Dr

Cycle (sec): 100 | Critical Vol./Cap.(X): 0.450
Loss Time (sec): 0 (Y+R=4.0 sec) | Average Delay (sec/veh): 9.5
Optimal Cycle: 0 | Level Of Service: A

Street Name:	Mary St							Hawarden Dr					
Approach:	North Bound			South Bound				East Bound			West Bound		
Movement:	L -	T -	R	L -	T -	R	L -	T -	R	L -	T -	R
Control:	Stop Sign			Stop Sign			Stop Sign			Stop Sign		
Rights:	Include			Include			Include			Include		
Min. Green:	7	7	7	7	7	7	7	7	7	7	7	7
Lanes:	0 1	0	0 0	0	0	0 1 0	0	0	1! 0 0	0	0	0 0 0
Volume Module:												
Base Vol:	5	92	0	0	272	136	46	0	7	0	0	0
Growth Adj:	1.00	1.00	1.00	1.00	1.00	1.00	1.00	1.00	1.00	1.00	1.00	1.00
Initial Bse:	5	92	0	0	272	136	46	0	7	0	0	0
Added Vol:	0	0	0	0	0	0	0	0	0	0	0	0
PasserByVol:	0	0	0	0	0	0	0	0	0	0	0	0
Initial Fut:	5	92	0	0	272	136	46	0	7	0	0	0
User Adj:	1.00	1.00	1.00	1.00	1.00	1.00	1.00	1.00	1.00	1.00	1.00	1.00
PHF Adj:	1.00	1.00	1.00	1.00	1.00	1.00	1.00	1.00	1.00	1.00	1.00	1.00
PHF Volume:	5	92	0	0	272	136	46	0	7	0	0	0
Reduct Vol:	0	0	0	0	0	0	0	0	0	0	0	0
Reduced Vol:	5	92	0	0	272	136	46	0	7	0	0	0
PCE Adj:	1.00	1.00	1.00	1.00	1.00	1.00	1.00	1.00	1.00	1.00	1.00	1.00
MLF Adj:	1.00	1.00	1.00	1.00	1.00	1.00	1.00	1.00	1.00	1.00	1.00	1.00
FinalVolume:	5	92	0	0	272	136	46	0	7	0	0	0
Saturation Flow Module:												
Adjustment:	1.00	1.00	1.00	1.00	1.00	1.00	1.00	1.00	1.00	1.00	1.00	1.00
Lanes:	0.05	0.95	0.00	0.00	0.67	0.33	0.87	0.00	0.13	0.00	0.00	0.00
Final Sat.:	41	756	0	0	605	303	580	0	88	0	0	0
Capacity Analysis Module:												
Vol/Sat:	0.12	0.12	xxxx	xxxx	0.45	0.45	0.08	xxxx	0.08	xxxx	xxxx	xxxx
Crit Moves:		****				****	****					
Delay/Veh:	8.0	8.0	0.0	0.0	10.1	10.1	8.4	0.0	8.4	0.0	0.0	0.0
Delay Adj:	1.00	1.00	1.00	1.00	1.00	1.00	1.00	1.00	1.00	1.00	1.00	1.00
AdjDel/Veh:	8.0	8.0	0.0	0.0	10.1	10.1	8.4	0.0	8.4	0.0	0.0	0.0
LOS by Move:	A	A	*	*	B	B	A	*	A	*	*	*
ApproachDel:	8.0			10.1			8.4			xxxxxx		
Delay Adj:	1.00			1.00			1.00			xxxxx		
ApprAdjDel:	8.0			10.1			8.4			xxxxxx		
LOS by Appr:	A			B			A			*		
AllWayAvgQ:	0.1	0.1	0.1	0.8	0.8	0.8	0.1	0.1	0.1	0.0	0.0	0.0

Overlook Parkway Extension
Future Alt 3 (Gates Opened - With Overlook)
PM Peak Hour

Note: Queue reported is the number of cars per lane.

Overlook Parkway Extension
Future Alt 3 (Gates Opened - With Overlook)
PM Peak Hour

Level Of Service Computation Report
2000 HCM 4-Way Stop Method (Future Volume Alternative)

Intersection #24 Hawarden Dr/Overlook Pkwy

Cycle (sec):	100	Critical Vol./Cap.(X):	0.933
Loss Time (sec):	0 (Y+R=4.0 sec)	Average Delay (sec/veh):	35.6
Optimal Cycle:	0	Level Of Service:	E

Street Name:	Hawarden Dr					Overlook Pkwy					
Approach:	North Bound			South Bound			East Bound			West Bound		
Movement:	L -	T -	R	L -	T -	R	L -	T -	R	L -	T -	R
Control:	Stop Sign			Stop Sign			Stop Sign			Stop Sign		
Rights:	Include			Include			Include			Include		
Min. Green:	7	7	7	7	7	7	7	7	7	7	7	7
Lanes:	0 0	1! 0	0	0 0	1! 0	0	1 0	1 1	0	1 0	1 1	0
Volume Module:												
Base Vol:	35	6	12	66	29	33	14	1016	55	6	795	29
Growth Adj:	1.00	1.00	1.00	1.00	1.00	1.00	1.00	1.00	1.00	1.00	1.00	1.00
Initial Bse:	35	6	12	66	29	33	14	1016	55	6	795	29
Added Vol:	0	0	0	0	0	0	0	0	0	0	0	0
PasserByVol:	0	0	0	0	0	0	0	0	0	0	0	0
Initial Fut:	35	6	12	66	29	33	14	1016	55	6	795	29
User Adj:	1.00	1.00	1.00	1.00	1.00	1.00	1.00	1.00	1.00	1.00	1.00	1.00
PHF Adj:	1.00	1.00	1.00	1.00	1.00	1.00	1.00	1.00	1.00	1.00	1.00	1.00
PHF Volume:	35	6	12	66	29	33	14	1016	55	6	795	29
Reduct Vol:	0	0	0	0	0	0	0	0	0	0	0	0
Reduced Vol:	35	6	12	66	29	33	14	1016	55	6	795	29
PCE Adj:	1.00	1.00	1.00	1.00	1.00	1.00	1.00	1.00	1.00	1.00	1.00	1.00
MLF Adj:	1.00	1.00	1.00	1.00	1.00	1.00	1.00	1.00	1.00	1.00	1.00	1.00
FinalVolume:	35	6	12	66	29	33	14	1016	55	6	795	29
Saturation Flow Module:												
Adjustment:	1.00	1.00	1.00	1.00	1.00	1.00	1.00	1.00	1.00	1.00	1.00	1.00
Lanes:	0.66	0.11	0.23	0.51	0.23	0.26	1.00	1.90	0.10	1.00	1.93	0.07
Final Sat.:	314	54	108	262	115	131	523	1088	59	498	1046	38
Capacity Analysis Module:												
Vol/Sat:	0.11	0.11	0.11	0.25	0.25	0.25	0.03	0.93	0.93	0.01	0.76	0.76
Crit Moves:	****			****			****			****		
Delay/Veh:	11.2	11.2	11.2	12.2	12.2	12.2	9.7	47.1	45.8	9.9	26.6	26.3
Delay Adj:	1.00	1.00	1.00	1.00	1.00	1.00	1.00	1.00	1.00	1.00	1.00	1.00
AdjDel/Veh:	11.2	11.2	11.2	12.2	12.2	12.2	9.7	47.1	45.8	9.9	26.6	26.3
LOS by Move:	B	B	B	B	B	B	A	E	E	A	D	D
ApproachDel:	11.2			12.2			46.5			26.5		
Delay Adj:	1.00			1.00			1.00			1.00		
ApprAdjDel:	11.2			12.2			46.5			26.5		
LOS by Appr:	B			B			E			D		
AllWayAvgQ:	0.1	0.1	0.1	0.3	0.3	0.3	0.0	6.2	5.9	0.0	2.6	2.6

Traffix 7.9.0415 (c) 2007 Dowling Assoc. Licensed to MMA, LONG BEACH, CA

Overlook Parkway Extension
Future Alt 3 (Gates Opened - With Overlook)
PM Peak Hour

Note: Queue reported is the number of cars per lane.

Traffix 7.9.0415 (c) 2007 Dowling Assoc. Licensed to MMA, LONG BEACH, CA

Overlook Parkway Extension
Future Alt 3 (Gates Opened - With Overlook)
PM Peak Hour

Level Of Service Computation Report
2000 HCM 4-Way Stop Method (Future Volume Alternative)

Intersection #25 Crystal View Ter/Berry Rd

Cycle (sec):	100	Critical Vol./Cap.(X):	0.467
Loss Time (sec):	0 (Y+R=4.0 sec)	Average Delay (sec/veh):	10.9
Optimal Cycle:	0	Level Of Service:	B

Street Name:	Crystal View Ter							Berry Rd					
Approach:	North Bound			South Bound			East Bound			West Bound			
Movement:	L	T	R	L	T	R	L	T	R	L	T	R	
Control:	Stop Sign			Stop Sign			Stop Sign			Stop Sign			
Rights:	Include			Include			Include			Include			
Min. Green:	7	7	7	7	7	7	7	7	7	7	7	7	
Lanes:	0 0	1! 0	0	0 0	1! 0	0	0 0	1! 0	0	0 0	1! 0	0	
Volume Module:													
Base Vol:	1	6	147	210	56	2	1	0	7	270	7	45	
Growth Adj:	1.00	1.00	1.00	1.00	1.00	1.00	1.00	1.00	1.00	1.00	1.00	1.00	
Initial Bse:	1	6	147	210	56	2	1	0	7	270	7	45	
Added Vol:	0	0	0	0	0	0	0	0	0	0	0	0	
PasserByVol:	0	0	0	0	0	0	0	0	0	0	0	0	
Initial Fut:	1	6	147	210	56	2	1	0	7	270	7	45	
User Adj:	1.00	1.00	1.00	1.00	1.00	1.00	1.00	1.00	1.00	1.00	1.00	1.00	
PHF Adj:	1.00	1.00	1.00	1.00	1.00	1.00	1.00	1.00	1.00	1.00	1.00	1.00	
PHF Volume:	1	6	147	210	56	2	1	0	7	270	7	45	
Reduct Vol:	0	0	0	0	0	0	0	0	0	0	0	0	
Reduced Vol:	1	6	147	210	56	2	1	0	7	270	7	45	
PCE Adj:	1.00	1.00	1.00	1.00	1.00	1.00	1.00	1.00	1.00	1.00	1.00	1.00	
MLF Adj:	1.00	1.00	1.00	1.00	1.00	1.00	1.00	1.00	1.00	1.00	1.00	1.00	
FinalVolume:	1	6	147	210	56	2	1	0	7	270	7	45	
Saturation Flow Module:													
Adjustment:	1.00	1.00	1.00	1.00	1.00	1.00	1.00	1.00	1.00	1.00	1.00	1.00	
Lanes:	0.01	0.04	0.95	0.78	0.21	0.01	0.12	0.00	0.88	0.84	0.02	0.14	
Final Sat.:	5	29	709	532	142	5	82	0	575	579	15	96	
Capacity Analysis Module:													
Vol/Sat:	0.21	0.21	0.21	0.39	0.39	0.39	0.01	xxxx	0.01	0.47	0.47	0.47	
Crit Moves:	****			****			****			****			
Delay/Veh:	8.6	8.6	8.6	11.1	11.1	11.1	7.9	0.0	7.9	12.0	12.0	12.0	
Delay Adj:	1.00	1.00	1.00	1.00	1.00	1.00	1.00	1.00	1.00	1.00	1.00	1.00	
AdjDel/Veh:	8.6	8.6	8.6	11.1	11.1	11.1	7.9	0.0	7.9	12.0	12.0	12.0	
LOS by Move:	A	A	A	B	B	B	A	*	A	B	B	B	
ApproachDel:	8.6			11.1			7.9			12.0			
Delay Adj:	1.00			1.00			1.00			1.00			
ApprAdjDel:	8.6			11.1			7.9			12.0			
LOS by Appr:	A			B			A			B			
AllWayAvgQ:	0.2	0.2	0.2	0.6	0.6	0.6	0.0	0.0	0.0	0.8	0.8	0.8	

Traffix 7.9.0415 (c) 2007 Dowling Assoc. Licensed to MMA, LONG BEACH, CA

Overlook Parkway Extension
Future Alt 3 (Gates Opened - With Overlook)
PM Peak Hour

Note: Queue reported is the number of cars per lane.

Traffix 7.9.0415 (c) 2007 Dowling Assoc. Licensed to MMA, LONG BEACH, CA

Overlook Parkway Extension
Future Alt 3 (Gates Opened - With Overlook)
PM Peak Hour

Level Of Service Computation Report
2000 HCM 4-Way Stop Method (Future Volume Alternative)

Intersection #26 Corinthian Wy/Berry Rd

Cycle (sec):	100	Critical Vol./Cap.(X):	0.486
Loss Time (sec):	0 (Y+R=4.0 sec)	Average Delay (sec/veh):	10.9
Optimal Cycle:	0	Level Of Service:	B

Street Name:	Corinthian Wy						Berry Rd					
Approach:	North Bound			South Bound			East Bound			West Bound		
Movement:	L -	T -	R	L -	T -	R	L -	T -	R	L -	T -	R
Control:	Stop Sign			Stop Sign			Stop Sign			Stop Sign		
Rights:	Include			Include			Include			Include		
Min. Green:	7	7	7	7	7	7	7	7	7	7	7	7
Lanes:	0 0	0 0	0	0 0	1! 0	0	0 1	0 0	0	0 0	0 1	0
Volume Module:												
Base Vol:	0	0	0	47	0	278	115	239	0	0	54	3
Growth Adj:	1.00	1.00	1.00	1.00	1.00	1.00	1.00	1.00	1.00	1.00	1.00	1.00
Initial Bse:	0	0	0	47	0	278	115	239	0	0	54	3
Added Vol:	0	0	0	0	0	0	0	0	0	0	0	0
PasserByVol:	0	0	0	0	0	0	0	0	0	0	0	0
Initial Fut:	0	0	0	47	0	278	115	239	0	0	54	3
User Adj:	1.00	1.00	1.00	1.00	1.00	1.00	1.00	1.00	1.00	1.00	1.00	1.00
PHF Adj:	1.00	1.00	1.00	1.00	1.00	1.00	1.00	1.00	1.00	1.00	1.00	1.00
PHF Volume:	0	0	0	47	0	278	115	239	0	0	54	3
Reduct Vol:	0	0	0	0	0	0	0	0	0	0	0	0
Reduced Vol:	0	0	0	47	0	278	115	239	0	0	54	3
PCE Adj:	1.00	1.00	1.00	1.00	1.00	1.00	1.00	1.00	1.00	1.00	1.00	1.00
MLF Adj:	1.00	1.00	1.00	1.00	1.00	1.00	1.00	1.00	1.00	1.00	1.00	1.00
FinalVolume:	0	0	0	47	0	278	115	239	0	0	54	3
Saturation Flow Module:												
Adjustment:	1.00	1.00	1.00	1.00	1.00	1.00	1.00	1.00	1.00	1.00	1.00	1.00
Lanes:	0.00	0.00	0.00	0.14	0.00	0.86	0.32	0.68	0.00	0.00	0.95	0.05
Final Sat.:	0	0	0	113	0	668	237	492	0	0	632	35
Capacity Analysis Module:												
Vol/Sat:	xxxx	xxxx	xxxx	0.42	xxxx	0.42	0.49	0.49	xxxx	xxxx	0.09	0.09
Crit Moves:						****	****					****
Delay/Veh:	0.0	0.0	0.0	10.2	0.0	10.2	11.9	11.9	0.0	0.0	8.5	8.5
Delay Adj:	1.00	1.00	1.00	1.00	1.00	1.00	1.00	1.00	1.00	1.00	1.00	1.00
AdjDel/Veh:	0.0	0.0	0.0	10.2	0.0	10.2	11.9	11.9	0.0	0.0	8.5	8.5
LOS by Move:	*	*	*	B	*	B	B	B	*	*	A	A
ApproachDel:	xxxxxx			10.2			11.9			8.5		
Delay Adj:	xxxxx			1.00			1.00			1.00		
ApprAdjDel:	xxxxxx			10.2			11.9			8.5		
LOS by Appr:	*			B			B			A		
AllWayAvgQ:	0.0	0.0	0.0	0.6	0.6	0.6	0.8	0.8	0.8	0.1	0.1	0.1

Overlook Parkway Extension
Future Alt 3 (Gates Opened - With Overlook)
PM Peak Hour

Note: Queue reported is the number of cars per lane.

Overlook Parkway Extension
Future Alt 3 (Gates Opened - With Overlook)
PM Peak Hour

Level Of Service Computation Report
2000 HCM Unsignalized Method (Future Volume Alternative)

Intersection #28 Orozco Dr/Overlook Pkwy

Average Delay (sec/veh): 77.7 Worst Case Level Of Service: F[781.0]

Street Name:	Orozco Dr						Overlook Pkwy					
Approach:	North Bound			South Bound			East Bound			West Bound		
Movement:	L -	T -	R	L -	T -	R	L -	T -	R	L -	T -	R
Control:	Stop Sign			Stop Sign			Uncontrolled			Uncontrolled		
Rights:	Include			Include			Include			Include		
Lanes:	0 0	1! 0	0	0 0	1! 0	0	1 0	1	1 0	1 0	1	1 0
Volume Module:												
Base Vol:	9	1	2	194	8	21	28	1058	10	0	879	46
Growth Adj:	1.00	1.00	1.00	1.00	1.00	1.00	1.00	1.00	1.00	1.00	1.00	1.00
Initial Bse:	9	1	2	194	8	21	28	1058	10	0	879	46
Added Vol:	0	0	0	0	0	0	0	0	0	0	0	0
PasserByVol:	0	0	0	0	0	0	0	0	0	0	0	0
Initial Fut:	9	1	2	194	8	21	28	1058	10	0	879	46
User Adj:	1.00	1.00	1.00	1.00	1.00	1.00	1.00	1.00	1.00	1.00	1.00	1.00
PHF Adj:	1.00	1.00	1.00	1.00	1.00	1.00	1.00	1.00	1.00	1.00	1.00	1.00
PHF Volume:	9	1	2	194	8	21	28	1058	10	0	879	46
Reduct Vol:	0	0	0	0	0	0	0	0	0	0	0	0
FinalVolume:	9	1	2	194	8	21	28	1058	10	0	879	46
Critical Gap Module:												
Critical Gp:	7.5	6.5	6.9	7.5	6.5	6.9	4.1	xxxx	xxxxx	xxxxx	xxxx	xxxxx
FollowUpTim:	3.5	4.0	3.3	3.5	4.0	3.3	2.2	xxxx	xxxxx	xxxxx	xxxx	xxxxx
Capacity Module:												
Cnflict Vol:	1563	2044	534	1488	2026	463	925	xxxx	xxxxx	xxxx	xxxx	xxxxx
Potent Cap.:	77	57	496	88	58	552	747	xxxx	xxxxx	xxxx	xxxx	xxxxx
Move Cap.:	64	55	496	84	56	552	747	xxxx	xxxxx	xxxx	xxxx	xxxxx
Volume/Cap:	0.14	0.02	0.00	2.32	0.14	0.04	0.04	xxxx	xxxx	xxxx	xxxx	xxxx
Level Of Service Module:												
2Way95thQ:	xxxx	xxxx	xxxxx	xxxx	xxxx	xxxxx	0.1	xxxx	xxxxx	xxxx	xxxx	xxxxx
Control Del:	xxxxx	xxxx	xxxxx	xxxxx	xxxx	xxxxx	10.0	xxxx	xxxxx	xxxxx	xxxx	xxxxx
LOS by Move:	*	*	*	*	*	*	B	*	*	*	*	*
Movement:	LT -	LTR -	RT	LT -	LTR -	RT	LT -	LTR -	RT	LT -	LTR -	RT
Shared Cap.:	xxxx	74	xxxxx	xxxx	89	xxxxx	xxxx	xxxx	xxxxx	xxxx	xxxx	xxxxx
SharedQueue:	xxxxx	0.5	xxxxx	xxxxx	20.7	xxxxx	xxxxx	xxxx	xxxxx	xxxxx	xxxx	xxxxx
Shrd ConDel:	xxxxx	62.9	xxxxx	xxxxx	781	xxxxx	xxxxx	xxxx	xxxxx	xxxxx	xxxx	xxxxx
Shared LOS:	*	F	*	*	F	*	*	*	*	*	*	*
ApproachDel:	62.9			781.0			xxxxxx			xxxxxx		
ApproachLOS:	F			F			*			*		

Note: Queue reported is the number of cars per lane.

Overlook Parkway Extension
Future Alt 3 (Gates Opened - With Overlook)
PM Peak Hour

Level Of Service Computation Report
2000 HCM 4-Way Stop Method (Future Volume Alternative)

Intersection #51 Madison St/Victoria Ave (North)

Cycle (sec): 100 Critical Vol./Cap.(X): 1.707
Loss Time (sec): 0 (Y+R=4.0 sec) Average Delay (sec/veh): 182.2
Optimal Cycle: 0 Level Of Service: F

Street Name:	Madison St						Victoria Ave (North)					
Approach:	North Bound			South Bound			East Bound			West Bound		
Movement:	L -	T -	R	L -	T -	R	L -	T -	R	L -	T -	R
Control:	Stop Sign			Stop Sign			Stop Sign			Stop Sign		
Rights:	Include			Include			Include			Include		
Min. Green:	7	7	7	7	7	7	7	7	7	7	7	7
Lanes:	0 1	0 0	0	0 0	1 0	1	0 0	0 0	0	0 1	0 0	1
Volume Module:												
Base Vol:	114	282	0	0	933	36	0	0	0	19	200	276
Growth Adj:	1.00	1.00	1.00	1.00	1.00	1.00	1.00	1.00	1.00	1.00	1.00	1.00
Initial Bse:	114	282	0	0	933	36	0	0	0	19	200	276
Added Vol:	0	0	0	0	0	0	0	0	0	0	0	0
PasserByVol:	0	0	0	0	0	0	0	0	0	0	0	0
Initial Fut:	114	282	0	0	933	36	0	0	0	19	200	276
User Adj:	1.00	1.00	1.00	1.00	1.00	1.00	1.00	1.00	1.00	1.00	1.00	1.00
PHF Adj:	1.00	1.00	1.00	1.00	1.00	1.00	1.00	1.00	1.00	1.00	1.00	1.00
PHF Volume:	114	282	0	0	933	36	0	0	0	19	200	276
Reduct Vol:	0	0	0	0	0	0	0	0	0	0	0	0
Reduced Vol:	114	282	0	0	933	36	0	0	0	19	200	276
PCE Adj:	1.00	1.00	1.00	1.00	1.00	1.00	1.00	1.00	1.00	1.00	1.00	1.00
MLF Adj:	1.00	1.00	1.00	1.00	1.00	1.00	1.00	1.00	1.00	1.00	1.00	1.00
FinalVolume:	114	282	0	0	933	36	0	0	0	19	200	276
Saturation Flow Module:												
Adjustment:	1.00	1.00	1.00	1.00	1.00	1.00	1.00	1.00	1.00	1.00	1.00	1.00
Lanes:	0.29	0.71	0.00	0.00	1.00	1.00	0.00	0.00	0.00	0.09	0.91	1.00
Final Sat.:	150	370	0	0	546	605	0	0	0	43	455	554
Capacity Analysis Module:												
Vol/Sat:	0.76	0.76	xxxx	xxxx	1.71	0.06	xxxx	xxxx	xxxx	0.44	0.44	0.50
Crit Moves:		****			****							****
Delay/Veh:	28.3	28.3	0.0	0.0	343	9.0	0.0	0.0	0.0	15.2	15.2	15.2
Delay Adj:	1.00	1.00	1.00	1.00	1.00	1.00	1.00	1.00	1.00	1.00	1.00	1.00
AdjDel/Veh:	28.3	28.3	0.0	0.0	343	9.0	0.0	0.0	0.0	15.2	15.2	15.2
LOS by Move:	D	D	*	*	F	A	*	*	*	C	C	C
ApproachDel:	28.3			330.4			xxxxxx			15.2		
Delay Adj:	1.00			1.00			xxxxx			1.00		
ApprAdjDel:	28.3			330.4			xxxxxx			15.2		
LOS by Appr:	D			F			*			C		
AllWayAvgQ:	2.7	2.7	2.7	0.0	50.6	0.1	0.0	0.0	0.0	0.7	0.7	0.9

Overlook Parkway Extension
Future Alt 3 (Gates Opened - With Overlook)
PM Peak Hour

Note: Queue reported is the number of cars per lane.

Overlook Parkway Extension
Future Alt 3 (Gates Opened - With Overlook)
PM Peak Hour

Level Of Service Computation Report
2000 HCM 4-Way Stop Method (Future Volume Alternative)

Intersection #52 Madison St/Victoria Ave (South)

Cycle (sec):	100	Critical Vol./Cap.(X):	1.477
Loss Time (sec):	0 (Y+R=4.0 sec)	Average Delay (sec/veh):	149.0
Optimal Cycle:	0	Level Of Service:	F

Street Name:	Madison St							Victoria Ave (South)					
Approach:	North Bound			South Bound			East Bound			West Bound			
Movement:	L	- T	- R	L	- T	- R	L	- T	- R	L	- T	- R	
Control:	Stop Sign			Stop Sign			Stop Sign			Stop Sign			
Rights:	Include			Include			Include			Include			
Min. Green:	7	7	7	7	7	7	7	7	7	7	7	7	
Lanes:	0 0	0 1	0	0 1	0 0	0	0 0	1! 0	0	0 0	0 0	0	
Volume Module:													
Base Vol:	0	250	62	557	395	0	46	273	18	0	0	0	
Growth Adj:	1.00	1.00	1.00	1.00	1.00	1.00	1.00	1.00	1.00	1.00	1.00	1.00	
Initial Bse:	0	250	62	557	395	0	46	273	18	0	0	0	
Added Vol:	0	0	0	0	0	0	0	0	0	0	0	0	
PasserByVol:	0	0	0	0	0	0	0	0	0	0	0	0	
Initial Fut:	0	250	62	557	395	0	46	273	18	0	0	0	
User Adj:	1.00	1.00	1.00	1.00	1.00	1.00	1.00	1.00	1.00	1.00	1.00	1.00	
PHF Adj:	1.00	1.00	1.00	1.00	1.00	1.00	1.00	1.00	1.00	1.00	1.00	1.00	
PHF Volume:	0	250	62	557	395	0	46	273	18	0	0	0	
Reduct Vol:	0	0	0	0	0	0	0	0	0	0	0	0	
Reduced Vol:	0	250	62	557	395	0	46	273	18	0	0	0	
PCE Adj:	1.00	1.00	1.00	1.00	1.00	1.00	1.00	1.00	1.00	1.00	1.00	1.00	
MLF Adj:	1.00	1.00	1.00	1.00	1.00	1.00	1.00	1.00	1.00	1.00	1.00	1.00	
FinalVolume:	0	250	62	557	395	0	46	273	18	0	0	0	
Saturation Flow Module:													
Adjustment:	1.00	1.00	1.00	1.00	1.00	1.00	1.00	1.00	1.00	1.00	1.00	1.00	
Lanes:	0.00	0.80	0.20	0.59	0.41	0.00	0.14	0.81	0.05	0.00	0.00	0.00	
Final Sat.:	0	486	121	377	267	0	78	462	30	0	0	0	
Capacity Analysis Module:													
Vol/Sat:	xxxx	0.51	0.51	1.48	1.48	xxxx	0.59	0.59	0.59	xxxx	xxxx	xxxx	
Crit Moves:			****		****		****						
Delay/Veh:	0.0	14.6	14.6	239.5	239	0.0	17.6	17.6	17.6	0.0	0.0	0.0	
Delay Adj:	1.00	1.00	1.00	1.00	1.00	1.00	1.00	1.00	1.00	1.00	1.00	1.00	
AdjDel/Veh:	0.0	14.6	14.6	239.5	239	0.0	17.6	17.6	17.6	0.0	0.0	0.0	
LOS by Move:	*	B	B	F	F	*	C	C	C	*	*	*	
ApproachDel:		14.6			239.5			17.6			xxxxxx		
Delay Adj:		1.00			1.00			1.00			xxxxx		
ApprAdjDel:		14.6			239.5			17.6			xxxxxx		
LOS by Appr:		B			F			C			*		
AllWayAvgQ:	1.0	1.0	1.0	41.3	41.3	41.3	1.3	1.3	1.3	0.0	0.0	0.0	

Overlook Parkway Extension
Future Alt 3 (Gates Opened - With Overlook)
PM Peak Hour

Note: Queue reported is the number of cars per lane.

Overlook Parkway Extension
Future Alt 3 (Gates Opened - With Overlook)
PM Peak Hour

Level Of Service Computation Report
2000 HCM 4-Way Stop Method (Future Volume Alternative)

Intersection #81 Washington St/Victoria Ave (North)

Cycle (sec):	100	Critical Vol./Cap.(X):	1.543
Loss Time (sec):	0 (Y+R=4.0 sec)	Average Delay (sec/veh):	190.7
Optimal Cycle:	0	Level Of Service:	F

Street Name:	Washington St							Victoria Ave (North)					
Approach:	North Bound			South Bound			East Bound			West Bound			
Movement:	L	- T	- R	L	- T	- R	L	- T	- R	L	- T	- R	
Control:	Stop Sign			Stop Sign			Stop Sign			Stop Sign			
Rights:	Include			Include			Include			Include			
Min. Green:	7	7	7	7	7	7	7	7	7	7	7	7	
Lanes:	0 1	1 0	0	0 0	0 1	0	0 0	0 0	0	1 0	0 1	0	
Volume Module:													
Base Vol:	379	661	0	0	743	3	0	0	0	679	100	8	
Growth Adj:	1.00	1.00	1.00	1.00	1.00	1.00	1.00	1.00	1.00	1.00	1.00	1.00	
Initial Bse:	379	661	0	0	743	3	0	0	0	679	100	8	
Added Vol:	0	0	0	0	0	0	0	0	0	0	0	0	
PasserByVol:	0	0	0	0	0	0	0	0	0	0	0	0	
Initial Fut:	379	661	0	0	743	3	0	0	0	679	100	8	
User Adj:	1.00	1.00	1.00	1.00	1.00	1.00	1.00	1.00	1.00	1.00	1.00	1.00	
PHF Adj:	1.00	1.00	1.00	1.00	1.00	1.00	1.00	1.00	1.00	1.00	1.00	1.00	
PHF Volume:	379	661	0	0	743	3	0	0	0	679	100	8	
Reduct Vol:	0	0	0	0	0	0	0	0	0	0	0	0	
Reduced Vol:	379	661	0	0	743	3	0	0	0	679	100	8	
PCE Adj:	1.00	1.00	1.00	1.00	1.00	1.00	1.00	1.00	1.00	1.00	1.00	1.00	
MLF Adj:	1.00	1.00	1.00	1.00	1.00	1.00	1.00	1.00	1.00	1.00	1.00	1.00	
FinalVolume:	379	661	0	0	743	3	0	0	0	679	100	8	
Saturation Flow Module:													
Adjustment:	1.00	1.00	1.00	1.00	1.00	1.00	1.00	1.00	1.00	1.00	1.00	1.00	
Lanes:	0.73	1.27	0.00	0.00	0.99	0.01	0.00	0.00	0.00	1.00	0.93	0.07	
Final Sat.:	334	605	0	0	481	2	0	0	0	448	445	36	
Capacity Analysis Module:													
Vol/Sat:	1.13	1.09	xxxx	xxxx	1.54	1.54	xxxx	xxxx	xxxx	1.51	0.22	0.22	
Crit Moves:	****				****					****			
Delay/Veh:	110.8	95.7	0.0	0.0	274	274.4	0.0	0.0	0.0	264.0	12.3	12.3	
Delay Adj:	1.00	1.00	1.00	1.00	1.00	1.00	1.00	1.00	1.00	1.00	1.00	1.00	
AdjDel/Veh:	110.8	95.7	0.0	0.0	274	274.4	0.0	0.0	0.0	264.0	12.3	12.3	
LOS by Move:	F	F	*	*	F	F	*	*	*	F	B	B	
ApproachDel:	101.2			274.4			xxxxxx			229.4			
Delay Adj:	1.00			1.00			xxxxx			1.00			
ApprAdjDel:	101.2			274.4			xxxxxx			229.4			
LOS by Appr:	F			F			*			F			
AllWayAvgQ:	12.8	10.9	0.0	35.5	35.5	35.5	0.0	0.0	0.0	31.5	0.3	0.3	

Overlook Parkway Extension
Future Alt 3 (Gates Opened - With Overlook)
PM Peak Hour

Note: Queue reported is the number of cars per lane.

Overlook Parkway Extension
Future Alt 3 (Gates Opened - With Overlook)
PM Peak Hour

Level Of Service Computation Report
2000 HCM 4-Way Stop Method (Future Volume Alternative)

Intersection #82 Washington St/Victoria Ave (South)

Cycle (sec):	100	Critical Vol./Cap.(X):	2.945
Loss Time (sec):	0 (Y+R=4.0 sec)	Average Delay (sec/veh):	432.3
Optimal Cycle:	0	Level Of Service:	F

Street Name:	Washington St							Victoria Ave (South)					
Approach:	North Bound			South Bound			East Bound			West Bound			
Movement:	L	- T	- R	L	- T	- R	L	- T	- R	L	- T	- R	
Control:	Stop Sign			Stop Sign			Stop Sign			Stop Sign			
Rights:	Include			Include			Include			Include			
Min. Green:	7	7	7	7	7	7	7	7	7	7	7	7	
Lanes:	0 0	2 0	1	0 1	0 0	0	0 1	0 0	1	0 0	0 0	0	
Volume Module:													
Base Vol:	0	1037	413	1	1421	0	3	118	757	0	0	0	
Growth Adj:	1.00	1.00	1.00	1.00	1.00	1.00	1.00	1.00	1.00	1.00	1.00	1.00	
Initial Bse:	0	1037	413	1	1421	0	3	118	757	0	0	0	
Added Vol:	0	0	0	0	0	0	0	0	0	0	0	0	
PasserByVol:	0	0	0	0	0	0	0	0	0	0	0	0	
Initial Fut:	0	1037	413	1	1421	0	3	118	757	0	0	0	
User Adj:	1.00	1.00	1.00	1.00	1.00	1.00	1.00	1.00	1.00	1.00	1.00	1.00	
PHF Adj:	1.00	1.00	1.00	1.00	1.00	1.00	1.00	1.00	1.00	1.00	1.00	1.00	
PHF Volume:	0	1037	413	1	1421	0	3	118	757	0	0	0	
Reduct Vol:	0	0	0	0	0	0	0	0	0	0	0	0	
Reduced Vol:	0	1037	413	1	1421	0	3	118	757	0	0	0	
PCE Adj:	1.00	1.00	1.00	1.00	1.00	1.00	1.00	1.00	1.00	1.00	1.00	1.00	
MLF Adj:	1.00	1.00	1.00	1.00	1.00	1.00	1.00	1.00	1.00	1.00	1.00	1.00	
FinalVolume:	0	1037	413	1	1421	0	3	118	757	0	0	0	
Saturation Flow Module:													
Adjustment:	1.00	1.00	1.00	1.00	1.00	1.00	1.00	1.00	1.00	1.00	1.00	1.00	
Lanes:	0.00	2.00	1.00	0.01	0.99	0.00	0.02	0.98	1.00	0.00	0.00	0.00	
Final Sat.:	0	960	530	0	482	0	10	413	463	0	0	0	
Capacity Analysis Module:													
Vol/Sat:	xxxx	1.08	0.78	2.95	2.95	xxxx	0.29	0.29	1.64	xxxx	xxxx	xxxx	
Crit Moves:		****			****				****				
Delay/Veh:	0.0	91.2	29.5	895.7	896	0.0	14.5	14.5	315.4	0.0	0.0	0.0	
Delay Adj:	1.00	1.00	1.00	1.00	1.00	1.00	1.00	1.00	1.00	1.00	1.00	1.00	
AdjDel/Veh:	0.0	91.2	29.5	895.7	896	0.0	14.5	14.5	315.4	0.0	0.0	0.0	
LOS by Move:	*	F	D	F	F	*	B	B	F	*	*	*	
ApproachDel:		73.6			895.7			273.9			xxxxxx		
Delay Adj:		1.00			1.00			1.00			xxxxx		
ApprAdjDel:		73.6			895.7			273.9			xxxxxx		
LOS by Appr:		F			F			F			*		
AllWayAvgQ:	0.0	10.8	2.9	119	119	118.7	0.4	0.4	39.2	0.0	0.0	0.0	

Overlook Parkway Extension
Future Alt 3 (Gates Opened - With Overlook)
PM Peak Hour

Note: Queue reported is the number of cars per lane.

Overlook Parkway Extension
Future Alt 3 (Gates Opened - With Overlook)
PM Peak Hour

Level Of Service Computation Report
2000 HCM 4-Way Stop Method (Future Volume Alternative)

Intersection #221 Mary St/Victoria Ave (North)

Cycle (sec):	100	Critical Vol./Cap.(X):	1.314
Loss Time (sec):	0 (Y+R=4.0 sec)	Average Delay (sec/veh):	113.2
Optimal Cycle:	0	Level Of Service:	F

Street Name:	Mary St							Victoria Ave (North)					
Approach:	North Bound			South Bound				East Bound			West Bound		
Movement:	L	- T	- R	L	- T	- R		L	- T	- R	L	- T	- R
Control:	Stop Sign			Stop Sign				Stop Sign			Stop Sign		
Rights:	Include			Include				Include			Include		
Min. Green:	7	7	7	7	7	7		7	7	7	7	7	7
Lanes:	0 1	0 0	0	0 0	1 0	1		0 0	0 0	0	0 0	1! 0	0
Volume Module:													
Base Vol:	20	638	0	0	652	530		0	0	0	140	263	93
Growth Adj:	1.00	1.00	1.00	1.00	1.00	1.00		1.00	1.00	1.00	1.00	1.00	1.00
Initial Bse:	20	638	0	0	652	530		0	0	0	140	263	93
Added Vol:	0	0	0	0	0	0		0	0	0	0	0	0
PasserByVol:	0	0	0	0	0	0		0	0	0	0	0	0
Initial Fut:	20	638	0	0	652	530		0	0	0	140	263	93
User Adj:	1.00	1.00	1.00	1.00	1.00	1.00		1.00	1.00	1.00	1.00	1.00	1.00
PHF Adj:	1.00	1.00	1.00	1.00	1.00	1.00		1.00	1.00	1.00	1.00	1.00	1.00
PHF Volume:	20	638	0	0	652	530		0	0	0	140	263	93
Reduct Vol:	0	0	0	0	0	0		0	0	0	0	0	0
Reduced Vol:	20	638	0	0	652	530		0	0	0	140	263	93
PCE Adj:	1.00	1.00	1.00	1.00	1.00	1.00		1.00	1.00	1.00	1.00	1.00	1.00
MLF Adj:	1.00	1.00	1.00	1.00	1.00	1.00		1.00	1.00	1.00	1.00	1.00	1.00
FinalVolume:	20	638	0	0	652	530		0	0	0	140	263	93
Saturation Flow Module:													
Adjustment:	1.00	1.00	1.00	1.00	1.00	1.00		1.00	1.00	1.00	1.00	1.00	1.00
Lanes:	0.03	0.97	0.00	0.00	1.00	1.00		0.00	0.00	0.00	0.28	0.53	0.19
Final Sat.:	16	514	0	0	496	549		0	0	0	152	285	101
Capacity Analysis Module:													
Vol/Sat:	1.24	1.24	xxxx	xxxx	1.31	0.97		xxxx	xxxx	xxxx	0.92	0.92	0.92
Crit Moves:	****				****								****
Delay/Veh:	146.0	146	0.0	0.0	177	55.3		0.0	0.0	0.0	47.9	47.9	47.9
Delay Adj:	1.00	1.00	1.00	1.00	1.00	1.00		1.00	1.00	1.00	1.00	1.00	1.00
AdjDel/Veh:	146.0	146	0.0	0.0	177	55.3		0.0	0.0	0.0	47.9	47.9	47.9
LOS by Move:	F	F	*	*	F	F		*	*	*	E	E	E
ApproachDel:	146.0			122.4				xxxxxx			47.9		
Delay Adj:	1.00			1.00				xxxxx			1.00		
ApprAdjDel:	146.0			122.4				xxxxxx			47.9		
LOS by Appr:	F			F				*			E		
AllWayAvgQ:	20.1	20.1	20.1	0.0	23.0	7.0		0.0	0.0	0.0	5.7	5.7	5.7

Overlook Parkway Extension
Future Alt 3 (Gates Opened - With Overlook)
PM Peak Hour

Note: Queue reported is the number of cars per lane.

Overlook Parkway Extension
Future Alt 3 (Gates Opened - With Overlook)
PM Peak Hour

Level Of Service Computation Report
2000 HCM 4-Way Stop Method (Future Volume Alternative)

Intersection #222 Mary St/Victoria Ave (South)

Cycle (sec):	100	Critical Vol./Cap.(X):	1.368
Loss Time (sec):	0 (Y+R=4.0 sec)	Average Delay (sec/veh):	100.1
Optimal Cycle:	0	Level Of Service:	F

Street Name:	Mary St						Victoria Ave (South)					
Approach:	North Bound			South Bound			East Bound			West Bound		
Movement:	L	T	R	L	T	R	L	T	R	L	T	R
Control:	Stop Sign			Stop Sign			Stop Sign			Stop Sign		
Rights:	Include			Include			Include			Include		
Min. Green:	7	7	7	7	7	7	7	7	7	7	7	7
Lanes:	0 0	0 1	0	0 1	0 0	0	1 0	0 1	0	0 0	0 0	0
Volume Module:												
Base Vol:	0	402	59	111	681	0	256	230	42	0	0	0
Growth Adj:	1.00	1.00	1.00	1.00	1.00	1.00	1.00	1.00	1.00	1.00	1.00	1.00
Initial Bse:	0	402	59	111	681	0	256	230	42	0	0	0
Added Vol:	0	0	0	0	0	0	0	0	0	0	0	0
PasserByVol:	0	0	0	0	0	0	0	0	0	0	0	0
Initial Fut:	0	402	59	111	681	0	256	230	42	0	0	0
User Adj:	1.00	1.00	1.00	1.00	1.00	1.00	1.00	1.00	1.00	1.00	1.00	1.00
PHF Adj:	1.00	1.00	1.00	1.00	1.00	1.00	1.00	1.00	1.00	1.00	1.00	1.00
PHF Volume:	0	402	59	111	681	0	256	230	42	0	0	0
Reduct Vol:	0	0	0	0	0	0	0	0	0	0	0	0
Reduced Vol:	0	402	59	111	681	0	256	230	42	0	0	0
PCE Adj:	1.00	1.00	1.00	1.00	1.00	1.00	1.00	1.00	1.00	1.00	1.00	1.00
MLF Adj:	1.00	1.00	1.00	1.00	1.00	1.00	1.00	1.00	1.00	1.00	1.00	1.00
FinalVolume:	0	402	59	111	681	0	256	230	42	0	0	0
Saturation Flow Module:												
Adjustment:	1.00	1.00	1.00	1.00	1.00	1.00	1.00	1.00	1.00	1.00	1.00	1.00
Lanes:	0.00	0.87	0.13	0.14	0.86	0.00	1.00	0.85	0.15	0.00	0.00	0.00
Final Sat.:	0	495	73	81	498	0	468	429	78	0	0	0
Capacity Analysis Module:												
Vol/Sat:	xxxx	0.81	0.81	1.37	1.37	xxxx	0.55	0.54	0.54	xxxx	xxxx	xxxx
Crit Moves:		****		****			****					
Delay/Veh:	0.0	30.6	30.6	195.2	195	0.0	19.0	17.4	17.4	0.0	0.0	0.0
Delay Adj:	1.00	1.00	1.00	1.00	1.00	1.00	1.00	1.00	1.00	1.00	1.00	1.00
AdjDel/Veh:	0.0	30.6	30.6	195.2	195	0.0	19.0	17.4	17.4	0.0	0.0	0.0
LOS by Move:	*	D	D	F	F	*	C	C	C	*	*	*
ApproachDel:		30.6		195.2			18.2			xxxxxx		
Delay Adj:		1.00		1.00			1.00			xxxxx		
ApprAdjDel:		30.6		195.2			18.2			xxxxxx		
LOS by Appr:		D		F			C			*		
AllWayAvgQ:	3.4	3.4	3.4	29.9	29.9	29.9	1.1	1.1	1.1	0.0	0.0	0.0

Overlook Parkway Extension
Future Alt 3 (Gates Opened - With Overlook)
PM Peak Hour

Note: Queue reported is the number of cars per lane.

Traffix 7.9.0415 (c) 2007 Dowling Assoc. Licensed to MMA, LONG BEACH, CA

Overlook Parkway Extension
Future Alt 4
AM Peak Hour

Scenario Report

Scenario:	Future Alt A AM
Command:	Future Alt A AM
Volume:	Future Alt A AM
Geometry:	Future
Impact Fee:	Default Impact Fee
Trip Generation:	none
Trip Distribution:	none
Paths:	Default Path
Routes:	Default Route
Configuration:	Future Alt A AM

Traffix 7.9.0215 (c) 2008 Dowling Assoc. Licensed to MMA, LONG BEACH, CA

Overlook Parkway Extension
Future Alt 4
AM Peak Hour

Impact Analysis Report
Level Of Service

Intersection	Base LOS	Base Del/ Veh	Base V/ C	Future LOS	Future Del/ Veh	Future V/ C	Change in
# 1 Madison St/SR-91 WB Ramps	D	36.9	0.869	D	36.9	0.869	+ 0.000 D/V
# 2 Madison St/SR-91 EB Ramps	D	47.6	0.893	D	47.6	0.893	+ 0.000 D/V
# 3 Madison St/Indiana Ave	F	95.0	1.215	F	95.0	1.215	+ 0.000 D/V
# 4 Madison St/Lincoln Ave	C	33.0	0.660	C	33.0	0.660	+ 0.000 D/V
# 6 Washington St/Indiana Ave	C	34.0	0.896	C	34.0	0.896	+ 0.000 D/V
# 7 Washington St/Lincoln Ave	F	138.0	1.539	F	138.0	1.539	+ 0.000 V/C
# 9 Washington St/Overlook Pkwy	F	136.8	1.279	F	136.8	1.279	+ 0.000 D/V
# 10 Riverside Ave-SR-91 WB/Arlingt	D	36.5	0.951	D	36.5	0.951	+ 0.000 D/V
# 11 Indiana Ave-SR-91 EB/Arlington	C	28.5	0.777	C	28.5	0.777	+ 0.000 D/V
# 12 Victoria Ave/Arlington Ave	F	81.4	1.148	F	81.4	1.148	+ 0.000 D/V
# 13 Alessandro Blvd/Arlington Ave	D	50.3	0.972	D	50.3	0.972	+ 0.000 D/V
# 14 Alessandro Blvd/Overlook Pkwy	F	174.3	1.507	F	174.3	1.507	+ 0.000 D/V
# 15 Alessandro Blvd/Trautwein Rd	E	69.2	1.011	E	69.2	1.011	+ 0.000 D/V
# 16 Crystal View Ter/Overlook Pkwy	C	21.2	0.742	C	21.2	0.742	+ 0.000 V/C
# 17 Kingdom Dr/Overlook Pkwy	F	152.0	0.000	F	152.0	0.000	+ 0.000 D/V
# 18 Kingdom Dr/Green Orchard Pl	A	9.6	0.000	A	9.6	0.000	+ 0.000 D/V
# 19 Trautwein Rd/John F. Kennedy D	F	87.0	1.103	F	87.0	1.103	+ 0.000 D/V
# 20 Washington St/Bradley St	C	25.8	0.812	C	25.8	0.812	+ 0.000 D/V
# 21 Alessandro Blvd/Via Vista Dr	C	28.3	0.861	C	28.3	0.861	+ 0.000 D/V
# 23 Mary St/Hawarden Dr	A	9.6	0.341	A	9.6	0.341	+ 0.000 V/C
# 24 Hawarden Dr/Overlook Pkwy	C	24.4	0.835	C	24.4	0.835	+ 0.000 V/C
# 25 Crystal View Ter/Berry Rd	A	8.2	0.309	A	8.2	0.309	+ 0.000 V/C
# 26 Corinthian Wy/Berry Rd	A	8.2	0.259	A	8.2	0.259	+ 0.000 V/C

Overlook Parkway Extension
Future Alt 4
AM Peak Hour

Intersection	Base LOS	Base Del/ Veh	Base V/ C	Future LOS	Future Del/ Veh	Future V/ C	Change in
# 28 Orozco Dr/Overlook Pkwy	F	58.5	0.000	F	58.5	0.000	+ 0.000 D/V
# 51 Madison St/Victoria Ave (North	F	109.6	1.321	F	109.6	1.321	+ 0.000 V/C
# 52 Madison St/Victoria Ave (South	F	113.2	1.332	F	113.2	1.332	+ 0.000 V/C
# 81 Washington St/Victoria Ave (No	C	17.5	0.687	C	17.5	0.687	+ 0.000 V/C
# 82 Washington St/Victoria Ave (So	C	18.1	0.775	C	18.1	0.775	+ 0.000 V/C
#221 Mary St/Victoria Ave (North)	F	71.2	1.177	F	71.2	1.177	+ 0.000 V/C
#222 Mary St/Victoria Ave (South)	C	25.0	0.883	C	25.0	0.883	+ 0.000 V/C

Overlook Parkway Extension
Future Alt 4
AM Peak Hour

Level Of Service Computation Report
2000 HCM Operations Method (Future Volume Alternative)

Intersection #1 Madison St/SR-91 WB Ramps

Cycle (sec): 100 | Critical Vol./Cap.(X): 0.869
Loss Time (sec): 12 (Y+R=4.0 sec) | Average Delay (sec/veh): 36.9
Optimal Cycle: 97 | Level Of Service: D

Street Name:	Madison St						SR-91 WB Ramps					
Approach:	North Bound			South Bound			East Bound			West Bound		
Movement:	L -	T -	R	L -	T -	R	L -	T -	R	L -	T -	R
Control:	Protected			Protected			Split Phase			Split Phase		
Rights:	Include			Include			Include			Include		
Min. Green:	7	7	7	7	7	7	7	7	7	7	7	7
Lanes:	1 0	2 0	0	0 0	3 0	1	0 0	0 0	0	0 1	0 0	1
Volume Module:												
Base Vol:	608	1175	0	0	735	185	0	0	0	482	4	192
Growth Adj:	1.00	1.00	1.00	1.00	1.00	1.00	1.00	1.00	1.00	1.00	1.00	1.00
Initial Bse:	608	1175	0	0	735	185	0	0	0	482	4	192
Added Vol:	0	0	0	0	0	0	0	0	0	0	0	0
PasserByVol:	0	0	0	0	0	0	0	0	0	0	0	0
Initial Fut:	608	1175	0	0	735	185	0	0	0	482	4	192
User Adj:	1.00	1.00	1.00	1.00	1.00	1.00	1.00	1.00	1.00	1.00	1.00	1.00
PHF Adj:	1.00	1.00	1.00	1.00	1.00	1.00	1.00	1.00	1.00	1.00	1.00	1.00
PHF Volume:	608	1175	0	0	735	185	0	0	0	482	4	192
Reduct Vol:	0	0	0	0	0	0	0	0	0	0	0	0
Reduced Vol:	608	1175	0	0	735	185	0	0	0	482	4	192
PCE Adj:	1.00	1.00	1.00	1.00	1.00	1.00	1.00	1.00	1.00	1.00	1.00	1.00
MLF Adj:	1.00	1.00	1.00	1.00	1.00	1.00	1.00	1.00	1.00	1.00	1.00	1.00
FinalVolume:	608	1175	0	0	735	185	0	0	0	482	4	192
Saturation Flow Module:												
Sat/Lane:	1900	1900	1900	1900	1900	1900	1900	1900	1900	1900	1900	1900
Adjustment:	0.95	0.95	1.00	1.00	0.91	0.85	1.00	1.00	1.00	0.89	0.89	0.85
Lanes:	1.00	2.00	0.00	0.00	3.00	1.00	0.00	0.00	0.00	0.99	0.01	1.00
Final Sat.:	1805	3610	0	0	5187	1615	0	0	0	1683	14	1615
Capacity Analysis Module:												
Vol/Sat:	0.34	0.33	0.00	0.00	0.14	0.11	0.00	0.00	0.00	0.29	0.29	0.12
Crit Moves:	****				****					****		
Green/Cycle:	0.39	0.45	0.00	0.00	0.16	0.16	0.00	0.00	0.00	0.33	0.33	0.33
Volume/Cap:	0.87	0.72	0.00	0.00	0.87	0.70	0.00	0.00	0.00	0.87	0.87	0.36
Delay/Veh:	39.6	23.7	0.0	0.0	50.4	47.8	0.0	0.0	0.0	45.2	45.2	25.9
User DelAdj:	1.00	1.00	1.00	1.00	1.00	1.00	1.00	1.00	1.00	1.00	1.00	1.00
AdjDel/Veh:	39.6	23.7	0.0	0.0	50.4	47.8	0.0	0.0	0.0	45.2	45.2	25.9
LOS by Move:	D	C	A	A	D	D	A	A	A	D	D	C
HCM2kAvgQ:	20	16	0	0	11	7	0	0	0	17	17	5

Note: Queue reported is the number of cars per lane.

Overlook Parkway Extension
Future Alt 4
AM Peak Hour

Level Of Service Computation Report
2000 HCM Operations Method (Future Volume Alternative)

Intersection #2 Madison St/SR-91 EB Ramps

Cycle (sec): 100 | Critical Vol./Cap.(X): 0.893
Loss Time (sec): 12 (Y+R=4.0 sec) | Average Delay (sec/veh): 47.6
Optimal Cycle: 107 | Level Of Service: D

Street Name:	Madison St						SR-91 EB Ramps					
Approach:	North Bound			South Bound			East Bound			West Bound		
Movement:	L -	T -	R	L -	T -	R	L -	T -	R	L -	T -	R
Control:	Protected			Protected			Protected			Protected		
Rights:	Include			Include			Include			Include		
Min. Green:	7	7	7	7	7	7	7	7	7	7	7	7
Lanes:	0 0	3 0	1	1 0	2 0	0	0 1	0 0	1	0 0	0 0	0
Volume Module:												
Base Vol:	0	1526	351	136	1126	0	288	12	766	0	0	0
Growth Adj:	1.00	1.00	1.00	1.00	1.00	1.00	1.00	1.00	1.00	1.00	1.00	1.00
Initial Bse:	0	1526	351	136	1126	0	288	12	766	0	0	0
Added Vol:	0	0	0	0	0	0	0	0	0	0	0	0
PasserByVol:	0	0	0	0	0	0	0	0	0	0	0	0
Initial Fut:	0	1526	351	136	1126	0	288	12	766	0	0	0
User Adj:	1.00	1.00	1.00	1.00	1.00	1.00	1.00	1.00	1.00	1.00	1.00	1.00
PHF Adj:	1.00	1.00	1.00	1.00	1.00	1.00	1.00	1.00	1.00	1.00	1.00	1.00
PHF Volume:	0	1526	351	136	1126	0	288	12	766	0	0	0
Reduct Vol:	0	0	0	0	0	0	0	0	0	0	0	0
Reduced Vol:	0	1526	351	136	1126	0	288	12	766	0	0	0
PCE Adj:	1.00	1.00	1.00	1.00	1.00	1.00	1.00	1.00	1.00	1.00	1.00	1.00
MLF Adj:	1.00	1.00	1.00	1.00	1.00	1.00	1.00	1.00	1.00	1.00	1.00	1.00
FinalVolume:	0	1526	351	136	1126	0	288	12	766	0	0	0
Saturation Flow Module:												
Sat/Lane:	1900	1900	1900	1900	1900	1900	1900	1900	1900	1900	1900	1900
Adjustment:	1.00	0.91	0.85	0.95	0.95	1.00	0.96	0.96	0.85	1.00	1.00	1.00
Lanes:	0.00	3.00	1.00	1.00	2.00	0.00	0.96	0.04	1.00	0.00	0.00	0.00
Final Sat.:	0	5187	1615	1805	3610	0	1751	73	1615	0	0	0
Capacity Analysis Module:												
Vol/Sat:	0.00	0.29	0.22	0.08	0.31	0.00	0.16	0.16	0.47	0.00	0.00	0.00
Crit Moves:	****				****				****			
Green/Cycle:	0.00	0.31	0.31	0.08	0.32	0.00	0.39	0.49	0.49	0.00	0.00	0.00
Volume/Cap:	0.00	0.94	0.70	0.94	0.97	0.00	0.42	0.34	0.97	0.00	0.00	0.00
Delay/Veh:	0.0	45.3	34.6	103.9	53.1	0.0	22.5	15.9	49.8	0.0	0.0	0.0
User DelAdj:	1.00	1.00	1.00	1.00	1.00	1.00	1.00	1.00	1.00	1.00	1.00	1.00
AdjDel/Veh:	0.0	45.3	34.6	103.9	53.1	0.0	22.5	15.9	49.8	0.0	0.0	0.0
LOS by Move:	A	D	C	F	D	A	C	B	D	A	A	A
HCM2kAvgQ:	0	22	11	7	24	0	7	6	29	0	0	0

Note: Queue reported is the number of cars per lane.

Overlook Parkway Extension
Future Alt 4
AM Peak Hour

Level Of Service Computation Report
2000 HCM Operations Method (Future Volume Alternative)

Intersection #3 Madison St/Indiana Ave

Cycle (sec): 100 | Critical Vol./Cap.(X): 1.215
Loss Time (sec): 16 (Y+R=4.0 sec) | Average Delay (sec/veh): 95.0
Optimal Cycle: 130 | Level Of Service: F

Street Name:	Madison St						Indiana Ave					
Approach:	North Bound			South Bound			East Bound			West Bound		
Movement:	L	T	R	L	T	R	L	T	R	L	T	R
Control:	Protected			Protected			Protected			Protected		
Rights:	Include			Include			Include			Include		
Min. Green:	7	7	7	7	7	7	7	7	7	7	7	7
Lanes:	1 0	1	1 0	1 0	1	1 0	1 0	1	1 0	1 0	1	1 0
Volume Module:												
Base Vol:	111	1129	45	487	861	368	265	593	65	20	225	449
Growth Adj:	1.00	1.00	1.00	1.00	1.00	1.00	1.00	1.00	1.00	1.00	1.00	1.00
Initial Bse:	111	1129	45	487	861	368	265	593	65	20	225	449
Added Vol:	0	0	0	0	0	0	0	0	0	0	0	0
PasserByVol:	0	0	0	0	0	0	0	0	0	0	0	0
Initial Fut:	111	1129	45	487	861	368	265	593	65	20	225	449
User Adj:	1.00	1.00	1.00	1.00	1.00	1.00	1.00	1.00	1.00	1.00	1.00	1.00
PHF Adj:	1.00	1.00	1.00	1.00	1.00	1.00	1.00	1.00	1.00	1.00	1.00	1.00
PHF Volume:	111	1129	45	487	861	368	265	593	65	20	225	449
Reduct Vol:	0	0	0	0	0	0	0	0	0	0	0	0
Reduced Vol:	111	1129	45	487	861	368	265	593	65	20	225	449
PCE Adj:	1.00	1.00	1.00	1.00	1.00	1.00	1.00	1.00	1.00	1.00	1.00	1.00
MLF Adj:	1.00	1.00	1.00	1.00	1.00	1.00	1.00	1.00	1.00	1.00	1.00	1.00
FinalVolume:	111	1129	45	487	861	368	265	593	65	20	225	449
Saturation Flow Module:												
Sat/Lane:	1900	1900	1900	1900	1900	1900	1900	1900	1900	1900	1900	1900
Adjustment:	0.95	0.94	0.94	0.95	0.91	0.91	0.95	0.94	0.94	0.95	0.86	0.86
Lanes:	1.00	1.92	0.08	1.00	1.40	0.60	1.00	1.80	0.20	1.00	1.00	1.00
Final Sat.:	1805	3451	138	1805	2415	1032	1805	3205	351	1805	1625	1625
Capacity Analysis Module:												
Vol/Sat:	0.06	0.33	0.33	0.27	0.36	0.36	0.15	0.19	0.19	0.01	0.14	0.28
Crit Moves:		****		****			****					****
Green/Cycle:	0.08	0.27	0.27	0.22	0.41	0.41	0.12	0.25	0.25	0.10	0.23	0.23
Volume/Cap:	0.76	1.21	1.21	1.21	0.87	0.87	1.21	0.73	0.73	0.12	0.61	1.21
Delay/Veh:	65.8	143	142.6	156.3	32.9	32.9	174.9	37.4	37.4	41.7	35.6	150.9
User DelAdj:	1.00	1.00	1.00	1.00	1.00	1.00	1.00	1.00	1.00	1.00	1.00	1.00
AdjDel/Veh:	65.8	143	142.6	156.3	32.9	32.9	174.9	37.4	37.4	41.7	35.6	150.9
LOS by Move:	E	F	F	F	C	C	F	D	D	D	D	F
HCM2kAvgQ:	5	35	35	28	21	21	17	11	11	1	7	28

Note: Queue reported is the number of cars per lane.

Overlook Parkway Extension
Future Alt 4
AM Peak Hour

Level Of Service Computation Report
2000 HCM Operations Method (Future Volume Alternative)

Intersection #4 Madison St/Lincoln Ave

Cycle (sec): 100 | Critical Vol./Cap.(X): 0.660
Loss Time (sec): 16 (Y+R=4.0 sec) | Average Delay (sec/veh): 33.0
Optimal Cycle: 64 | Level Of Service: C

Street Name:	Madison St						Lincoln Ave					
Approach:	North Bound			South Bound			East Bound			West Bound		
Movement:	L	T	R	L	T	R	L	T	R	L	T	R
Control:	Protected			Protected			Protected			Protected		
Rights:	Include			Include			Include			Include		
Min. Green:	7	7	7	7	7	7	7	7	7	7	7	7
Lanes:	1 0	1	1 0	1 0	1	1 0	1 0	0	1 0	1 0	1	1 0
Volume Module:												
Base Vol:	194	1085	18	44	729	173	144	249	127	27	185	57
Growth Adj:	1.00	1.00	1.00	1.00	1.00	1.00	1.00	1.00	1.00	1.00	1.00	1.00
Initial Bse:	194	1085	18	44	729	173	144	249	127	27	185	57
Added Vol:	0	0	0	0	0	0	0	0	0	0	0	0
PasserByVol:	0	0	0	0	0	0	0	0	0	0	0	0
Initial Fut:	194	1085	18	44	729	173	144	249	127	27	185	57
User Adj:	1.00	1.00	1.00	1.00	1.00	1.00	1.00	1.00	1.00	1.00	1.00	1.00
PHF Adj:	1.00	1.00	1.00	1.00	1.00	1.00	1.00	1.00	1.00	1.00	1.00	1.00
PHF Volume:	194	1085	18	44	729	173	144	249	127	27	185	57
Reduct Vol:	0	0	0	0	0	0	0	0	0	0	0	0
Reduced Vol:	194	1085	18	44	729	173	144	249	127	27	185	57
PCE Adj:	1.00	1.00	1.00	1.00	1.00	1.00	1.00	1.00	1.00	1.00	1.00	1.00
MLF Adj:	1.00	1.00	1.00	1.00	1.00	1.00	1.00	1.00	1.00	1.00	1.00	1.00
FinalVolume:	194	1085	18	44	729	173	144	249	127	27	185	57
Saturation Flow Module:												
Sat/Lane:	1900	1900	1900	1900	1900	1900	1900	1900	1900	1900	1900	1900
Adjustment:	0.95	0.95	0.95	0.95	0.92	0.92	0.95	0.95	0.95	0.95	0.92	0.92
Lanes:	1.00	1.97	0.03	1.00	1.62	0.38	1.00	0.66	0.34	1.00	1.53	0.47
Final Sat.:	1805	3544	59	1805	2833	672	1805	1194	609	1805	2663	821
Capacity Analysis Module:												
Vol/Sat:	0.11	0.31	0.31	0.02	0.26	0.26	0.08	0.21	0.21	0.01	0.07	0.07
Crit Moves:		****		****				****		****		
Green/Cycle:	0.14	0.42	0.42	0.07	0.34	0.34	0.19	0.28	0.28	0.07	0.17	0.17
Volume/Cap:	0.75	0.74	0.74	0.35	0.75	0.75	0.42	0.74	0.74	0.21	0.42	0.42
Delay/Veh:	52.7	26.5	26.5	46.0	31.7	31.7	36.6	37.9	37.9	44.8	37.9	37.9
User DelAdj:	1.00	1.00	1.00	1.00	1.00	1.00	1.00	1.00	1.00	1.00	1.00	1.00
AdjDel/Veh:	52.7	26.5	26.5	46.0	31.7	31.7	36.6	37.9	37.9	44.8	37.9	37.9
LOS by Move:	D	C	C	D	C	C	D	D	D	D	D	D
HCM2kAvgQ:	8	16	16	2	14	14	4	12	12	1	4	4

Note: Queue reported is the number of cars per lane.

Overlook Parkway Extension
Future Alt 4
AM Peak Hour

Level Of Service Computation Report
2000 HCM Operations Method (Future Volume Alternative)

Intersection #6 Washington St/Indiana Ave

Cycle (sec): 100 Critical Vol./Cap.(X): 0.896
Loss Time (sec): 12 (Y+R=4.0 sec) Average Delay (sec/veh): 34.0
Optimal Cycle: 108 Level Of Service: C

Street Name:	Washington St						Indiana Ave					
Approach:	North Bound			South Bound			East Bound			West Bound		
Movement:	L	T	R	L	T	R	L	T	R	L	T	R
Control:	Permitted			Permitted			Protected			Protected		
Rights:	Ovl			Include			Include			Include		
Min. Green:	7	7	7	7	7	7	7	7	7	7	7	7
Lanes:	1 0	0 1	0	1 0	0 1	0	1 0	1 1	0	1 0	1 1	0
Volume Module:												
Base Vol:	267	4	581	4	0	1	6	1045	85	199	484	14
Growth Adj:	1.00	1.00	1.00	1.00	1.00	1.00	1.00	1.00	1.00	1.00	1.00	1.00
Initial Bse:	267	4	581	4	0	1	6	1045	85	199	484	14
Added Vol:	0	0	0	0	0	0	0	0	0	0	0	0
PasserByVol:	0	0	0	0	0	0	0	0	0	0	0	0
Initial Fut:	267	4	581	4	0	1	6	1045	85	199	484	14
User Adj:	1.00	1.00	1.00	1.00	1.00	1.00	1.00	1.00	1.00	1.00	1.00	1.00
PHF Adj:	1.00	1.00	1.00	1.00	1.00	1.00	1.00	1.00	1.00	1.00	1.00	1.00
PHF Volume:	267	4	581	4	0	1	6	1045	85	199	484	14
Reduct Vol:	0	0	0	0	0	0	0	0	0	0	0	0
Reduced Vol:	267	4	581	4	0	1	6	1045	85	199	484	14
PCE Adj:	1.00	1.00	1.00	1.00	1.00	1.00	1.00	1.00	1.00	1.00	1.00	1.00
MLF Adj:	1.00	1.00	1.00	1.00	1.00	1.00	1.00	1.00	1.00	1.00	1.00	1.00
FinalVolume:	267	4	581	4	0	1	6	1045	85	199	484	14
Saturation Flow Module:												
Sat/Lane:	1900	1900	1900	1900	1900	1900	1900	1900	1900	1900	1900	1900
Adjustment:	0.77	0.85	0.85	0.17	1.00	0.85	0.95	0.94	0.94	0.95	0.95	0.95
Lanes:	1.00	0.01	0.99	1.00	0.00	1.00	1.00	1.85	0.15	1.00	1.94	0.06
Final Sat.:	1459	11	1606	325	0	1615	1805	3302	269	1805	3494	101
Capacity Analysis Module:												
Vol/Sat:	0.18	0.36	0.36	0.01	0.00	0.00	0.00	0.32	0.32	0.11	0.14	0.14
Crit Moves:		****						****		****		
Green/Cycle:	0.40	0.40	0.53	0.40	0.00	0.40	0.16	0.35	0.35	0.12	0.32	0.32
Volume/Cap:	0.45	0.90	0.69	0.03	0.00	0.00	0.02	0.90	0.90	0.90	0.44	0.44
Delay/Veh:	22.3	42.9	19.9	18.1	0.0	17.8	35.4	39.3	39.3	77.0	27.4	27.4
User DelAdj:	1.00	1.00	1.00	1.00	1.00	1.00	1.00	1.00	1.00	1.00	1.00	1.00
AdjDel/Veh:	22.3	42.9	19.9	18.1	0.0	17.8	35.4	39.3	39.3	77.0	27.4	27.4
LOS by Move:	C	D	B	B	A	B	D	D	D	E	C	C
HCM2kAvgQ:	6	20	14	0	0	0	0	21	21	9	7	7

Note: Queue reported is the number of cars per lane.

Overlook Parkway Extension
Future Alt 4
AM Peak Hour

Level Of Service Computation Report
2000 HCM 4-Way Stop Method (Future Volume Alternative)

Intersection #7 Washington St/Lincoln Ave

Cycle (sec): 100 Critical Vol./Cap.(X): 1.539
Loss Time (sec): 0 (Y+R=4.0 sec) Average Delay (sec/veh): 138.0
Optimal Cycle: 0 Level Of Service: F

Street Name:	Washington St						Lincoln Ave					
Approach:	North Bound			South Bound			East Bound			West Bound		
Movement:	L	T	R	L	T	R	L	T	R	L	T	R
Control:	Stop Sign			Stop Sign			Stop Sign			Stop Sign		
Rights:	Include			Include			Include			Include		
Min. Green:	7	7	7	7	7	7	7	7	7	7	7	7
Lanes:	0 0	1! 0	0	0 0	1! 0	0	0 0	1! 0	0	0 1	0 0	1
Volume Module:												
Base Vol:	44	716	46	75	231	17	14	299	15	33	170	71
Growth Adj:	1.00	1.00	1.00	1.00	1.00	1.00	1.00	1.00	1.00	1.00	1.00	1.00
Initial Bse:	44	716	46	75	231	17	14	299	15	33	170	71
Added Vol:	0	0	0	0	0	0	0	0	0	0	0	0
PasserByVol:	0	0	0	0	0	0	0	0	0	0	0	0
Initial Fut:	44	716	46	75	231	17	14	299	15	33	170	71
User Adj:	1.00	1.00	1.00	1.00	1.00	1.00	1.00	1.00	1.00	1.00	1.00	1.00
PHF Adj:	1.00	1.00	1.00	1.00	1.00	1.00	1.00	1.00	1.00	1.00	1.00	1.00
PHF Volume:	44	716	46	75	231	17	14	299	15	33	170	71
Reduct Vol:	0	0	0	0	0	0	0	0	0	0	0	0
Reduced Vol:	44	716	46	75	231	17	14	299	15	33	170	71
PCE Adj:	1.00	1.00	1.00	1.00	1.00	1.00	1.00	1.00	1.00	1.00	1.00	1.00
MLF Adj:	1.00	1.00	1.00	1.00	1.00	1.00	1.00	1.00	1.00	1.00	1.00	1.00
FinalVolume:	44	716	46	75	231	17	14	299	15	33	170	71
Saturation Flow Module:												
Adjustment:	1.00	1.00	1.00	1.00	1.00	1.00	1.00	1.00	1.00	1.00	1.00	1.00
Lanes:	0.05	0.89	0.06	0.23	0.72	0.05	0.04	0.91	0.05	0.16	0.84	1.00
Final Sat.:	29	465	30	110	337	25	20	422	21	68	351	461
Capacity Analysis Module:												
Vol/Sat:	1.54	1.54	1.54	0.68	0.68	0.68	0.71	0.71	0.71	0.48	0.48	0.15
Crit Moves:		****		****				****			****	
Delay/Veh:	270.7	271	270.7	23.9	23.9	23.9	25.9	25.9	25.9	17.9	17.9	11.5
Delay Adj:	1.00	1.00	1.00	1.00	1.00	1.00	1.00	1.00	1.00	1.00	1.00	1.00
AdjDel/Veh:	270.7	271	270.7	23.9	23.9	23.9	25.9	25.9	25.9	17.9	17.9	11.5
LOS by Move:	F	F	F	C	C	C	D	D	D	C	C	B
ApproachDel:	270.7			23.9			25.9			16.2		
Delay Adj:	1.00			1.00			1.00			1.00		
ApprAdjDel:	270.7			23.9			25.9			16.2		
LOS by Appr:	F			C			D			C		
AllWayAvgQ:	37.9	37.9	37.9	1.8	1.8	1.8	2.0	2.0	2.0	0.8	0.8	0.2

Overlook Parkway Extension
Future Alt 4
AM Peak Hour

Note: Queue reported is the number of cars per lane.

Overlook Parkway Extension
Future Alt 4
AM Peak Hour

Level Of Service Computation Report
2000 HCM Operations Method (Future Volume Alternative)

Intersection #9 Washington St/Overlook Pkwy

Cycle (sec): 100 Critical Vol./Cap.(X): 1.279
Loss Time (sec): 12 (Y+R=4.0 sec) Average Delay (sec/veh): 136.8
Optimal Cycle: 130 Level Of Service: F

Street Name:	Washington St						Overlook Pkwy					
Approach:	North Bound			South Bound			East Bound			West Bound		
Movement:	L -	T -	R	L -	T -	R	L -	T -	R	L -	T -	R
Control:	Protected			Protected			Protected			Protected		
Rights:	Include			Include			Include			Ovl		
Min. Green:	7	7	7	7	7	7	7	7	7	7	7	7
Lanes:	0 0	1 1	0	1 0	2 0	0	0 0	0 0	0	1 0	0 0	1
Volume Module:												
Base Vol:	0	1911	88	793	710	0	0	0	0	69	0	917
Growth Adj:	1.00	1.00	1.00	1.00	1.00	1.00	1.00	1.00	1.00	1.00	1.00	1.00
Initial Bse:	0	1911	88	793	710	0	0	0	0	69	0	917
Added Vol:	0	0	0	0	0	0	0	0	0	0	0	0
PasserByVol:	0	0	0	0	0	0	0	0	0	0	0	0
Initial Fut:	0	1911	88	793	710	0	0	0	0	69	0	917
User Adj:	1.00	1.00	1.00	1.00	1.00	1.00	1.00	1.00	1.00	1.00	1.00	1.00
PHF Adj:	1.00	1.00	1.00	1.00	1.00	1.00	1.00	1.00	1.00	1.00	1.00	1.00
PHF Volume:	0	1911	88	793	710	0	0	0	0	69	0	917
Reduct Vol:	0	0	0	0	0	0	0	0	0	0	0	0
Reduced Vol:	0	1911	88	793	710	0	0	0	0	69	0	917
PCE Adj:	1.00	1.00	1.00	1.00	1.00	1.00	1.00	1.00	1.00	1.00	1.00	1.00
MLF Adj:	1.00	1.00	1.00	1.00	1.00	1.00	1.00	1.00	1.00	1.00	1.00	1.00
FinalVolume:	0	1911	88	793	710	0	0	0	0	69	0	917
Saturation Flow Module:												
Sat/Lane:	1900	1900	1900	1900	1900	1900	1900	1900	1900	1900	1900	1900
Adjustment:	1.00	0.94	0.94	0.95	0.95	1.00	1.00	1.00	1.00	0.95	1.00	0.85
Lanes:	0.00	1.91	0.09	1.00	2.00	0.00	0.00	0.00	0.00	1.00	0.00	1.00
Final Sat.:	0	3427	158	1805	3610	0	0	0	0	1805	0	1615
Capacity Analysis Module:												
Vol/Sat:	0.00	0.56	0.56	0.44	0.20	0.00	0.00	0.00	0.00	0.04	0.00	0.57
Crit Moves:		****		****								****
Green/Cycle:	0.00	0.44	0.44	0.34	0.57	0.00	0.00	0.00	0.00	0.09	0.00	0.44
Volume/Cap:	0.00	1.28	1.28	1.28	0.34	0.00	0.00	0.00	0.00	0.45	0.00	1.28
Delay/Veh:	0.0	159	158.8	170.5	11.3	0.0	0.0	0.0	0.0	45.6	0.0	163.9
User DelAdj:	1.00	1.00	1.00	1.00	1.00	1.00	1.00	1.00	1.00	1.00	1.00	1.00
AdjDel/Veh:	0.0	159	158.8	170.5	11.3	0.0	0.0	0.0	0.0	45.6	0.0	163.9
LOS by Move:	A	F	F	F	B	A	A	A	A	D	A	F
HCM2kAvgQ:	0	62	62	48	6	0	0	0	0	3	0	54

Note: Queue reported is the number of cars per lane.

Overlook Parkway Extension
Future Alt 4
AM Peak Hour

Level Of Service Computation Report
2000 HCM Operations Method (Future Volume Alternative)

Intersection #10 Riverside Ave-SR-91 WB/Arlington Ave

Cycle (sec): 100 | Critical Vol./Cap.(X): 0.951
Loss Time (sec): 12 (Y+R=4.0 sec) | Average Delay (sec/veh): 36.5
Optimal Cycle: 130 | Level Of Service: D

Street Name:	Riverside Ave-SR-91 WB						Arlington Ave					
Approach:	North Bound			South Bound			East Bound			West Bound		
Movement:	L -	T -	R	L -	T -	R	L -	T -	R	L -	T -	R
Control:	Protected			Protected			Protected			Protected		
Rights:	Include			Ovl			Ignore			Ignore		
Min. Green:	7	7	7	7	7	7	7	7	7	7	7	7
Lanes:	0 0	0 0	0	1 1	0 0	1	1 0	3 0	1	1 0	3 0	1
Volume Module:												
Base Vol:	0	0	0	583	42	577	89	1237	163	525	1178	273
Growth Adj:	1.00	1.00	1.00	1.00	1.00	1.00	1.00	1.00	1.00	1.00	1.00	1.00
Initial Bse:	0	0	0	583	42	577	89	1237	163	525	1178	273
Added Vol:	0	0	0	0	0	0	0	0	0	0	0	0
PasserByVol:	0	0	0	0	0	0	0	0	0	0	0	0
Initial Fut:	0	0	0	583	42	577	89	1237	163	525	1178	273
User Adj:	1.00	1.00	1.00	1.00	1.00	1.00	1.00	1.00	0.00	1.00	1.00	0.00
PHF Adj:	1.00	1.00	1.00	1.00	1.00	1.00	1.00	1.00	0.00	1.00	1.00	0.00
PHF Volume:	0	0	0	583	42	577	89	1237	0	525	1178	0
Reduct Vol:	0	0	0	0	0	0	0	0	0	0	0	0
Reduced Vol:	0	0	0	583	42	577	89	1237	0	525	1178	0
PCE Adj:	1.00	1.00	1.00	1.00	1.00	1.00	1.00	1.00	0.00	1.00	1.00	0.00
MLF Adj:	1.00	1.00	1.00	1.00	1.00	1.00	1.00	1.00	0.00	1.00	1.00	0.00
FinalVolume:	0	0	0	583	42	577	89	1237	0	525	1178	0
Saturation Flow Module:												
Sat/Lane:	1900	1900	1900	1900	1900	1900	1900	1900	1900	1900	1900	1900
Adjustment:	1.00	1.00	1.00	0.93	0.93	0.85	0.95	0.91	1.00	0.95	0.91	1.00
Lanes:	0.00	0.00	0.00	1.87	0.13	1.00	1.00	3.00	1.00	1.00	3.00	1.00
Final Sat.:	0	0	0	3286	237	1615	1805	5187	1900	1805	5187	1900
Capacity Analysis Module:												
Vol/Sat:	0.00	0.00	0.00	0.18	0.18	0.36	0.05	0.24	0.00	0.29	0.23	0.00
Crit Moves:						****		****		****		
Green/Cycle:	0.00	0.00	0.00	0.27	0.31	0.44	0.13	0.26	0.00	0.31	0.44	0.00
Volume/Cap:	0.00	0.00	0.00	0.65	0.57	0.80	0.37	0.93	0.00	0.93	0.52	0.00
Delay/Veh:	0.0	0.0	0.0	33.8	29.7	30.7	40.3	47.6	0.0	55.0	20.8	0.0
User DelAdj:	1.00	1.00	1.00	1.00	1.00	1.00	1.00	1.00	1.00	1.00	1.00	1.00
AdjDel/Veh:	0.0	0.0	0.0	33.8	29.7	30.7	40.3	47.6	0.0	55.0	20.8	0.0
LOS by Move:	A	A	A	C	C	C	D	D	A	D	C	A
HCM2kAvgQ:	0	0	0	9	9	17	3	18	0	20	10	0

Note: Queue reported is the number of cars per lane.

Overlook Parkway Extension
Future Alt 4
AM Peak Hour

Level Of Service Computation Report
2000 HCM Operations Method (Future Volume Alternative)

Intersection #11 Indiana Ave-SR-91 EB/Arlington Ave

Cycle (sec): 100 | Critical Vol./Cap.(X): 0.777
Loss Time (sec): 12 (Y+R=4.0 sec) | Average Delay (sec/veh): 28.5
Optimal Cycle: 72 | Level Of Service: C

Street Name:	Indiana Ave-SR-91 EB						Arlington Ave					
Approach:	North Bound			South Bound			East Bound			West Bound		
Movement:	L -	T -	R	L -	T -	R	L -	T -	R	L -	T -	R
Control:	Protected			Protected			Protected			Protected		
Rights:	Ovl			Include			Ovl			Ignore		
Min. Green:	7	7	7	7	7	7	7	7	7	7	7	7
Lanes:	1 1	1 0	1	0 0	0 0	0	1 0	2 0	1	1 0	4 0	1
Volume Module:												
Base Vol:	216	309	520	0	0	0	250	1257	252	121	2005	335
Growth Adj:	1.00	1.00	1.00	1.00	1.00	1.00	1.00	1.00	1.00	1.00	1.00	1.00
Initial Bse:	216	309	520	0	0	0	250	1257	252	121	2005	335
Added Vol:	0	0	0	0	0	0	0	0	0	0	0	0
PasserByVol:	0	0	0	0	0	0	0	0	0	0	0	0
Initial Fut:	216	309	520	0	0	0	250	1257	252	121	2005	335
User Adj:	1.00	1.00	1.00	1.00	1.00	1.00	1.00	1.00	1.00	1.00	1.00	0.00
PHF Adj:	1.00	1.00	1.00	1.00	1.00	1.00	1.00	1.00	1.00	1.00	1.00	0.00
PHF Volume:	216	309	520	0	0	0	250	1257	252	121	2005	0
Reduct Vol:	0	0	0	0	0	0	0	0	0	0	0	0
Reduced Vol:	216	309	520	0	0	0	250	1257	252	121	2005	0
PCE Adj:	1.00	1.00	1.00	1.00	1.00	1.00	1.00	1.00	1.00	1.00	1.00	0.00
MLF Adj:	1.00	1.00	1.00	1.00	1.00	1.00	1.00	1.00	1.00	1.00	1.00	0.00
FinalVolume:	216	309	520	0	0	0	250	1257	252	121	2005	0
Saturation Flow Module:												
Sat/Lane:	1900	1900	1900	1900	1900	1900	1900	1900	1900	1900	1900	1900
Adjustment:	0.92	0.92	0.85	1.00	1.00	1.00	0.95	0.95	0.85	0.95	0.91	1.00
Lanes:	1.23	1.77	1.00	0.00	0.00	0.00	1.00	2.00	1.00	1.00	4.00	1.00
Final Sat.:	2159	3088	1615	0	0	0	1805	3610	1615	1805	6916	1900
Capacity Analysis Module:												
Vol/Sat:	0.10	0.10	0.32	0.00	0.00	0.00	0.14	0.35	0.16	0.07	0.29	0.00
Crit Moves:			****				****				****	
Green/Cycle:	0.23	0.33	0.42	0.00	0.00	0.00	0.18	0.46	0.69	0.09	0.37	0.00
Volume/Cap:	0.43	0.31	0.77	0.00	0.00	0.00	0.77	0.75	0.22	0.72	0.77	0.00
Delay/Veh:	32.9	25.3	30.3	0.0	0.0	0.0	50.1	24.3	5.6	58.5	29.0	0.0
User DelAdj:	1.00	1.00	1.00	1.00	1.00	1.00	1.00	1.00	1.00	1.00	1.00	1.00
AdjDel/Veh:	32.9	25.3	30.3	0.0	0.0	0.0	50.1	24.3	5.6	58.5	29.0	0.0
LOS by Move:	C	C	C	A	A	A	D	C	A	E	C	A
HCM2kAvgQ:	5	4	15	0	0	0	9	18	3	5	16	0

Note: Queue reported is the number of cars per lane.

Overlook Parkway Extension
Future Alt 4
AM Peak Hour

Level Of Service Computation Report
2000 HCM Operations Method (Future Volume Alternative)

Intersection #12 Victoria Ave/Arlington Ave

Cycle (sec): 100 | Critical Vol./Cap.(X): 1.148
Loss Time (sec): 16 (Y+R=4.0 sec) | Average Delay (sec/veh): 81.4
Optimal Cycle: 130 | Level Of Service: F

Street Name:	Victoria Ave						Arlington Ave					
Approach:	North Bound			South Bound			East Bound			West Bound		
Movement:	L	T	R	L	T	R	L	T	R	L	T	R
Control:	Protected			Protected			Protected			Protected		
Rights:	Ovl			Include			Include			Include		
Min. Green:	7	7	7	7	7	7	7	7	7	7	7	7
Lanes:	1 0	1 0	1	1 0	1 0	1	1 0	2 1	0	1 0	2 1	0
Volume Module:												
Base Vol:	21	467	368	251	278	193	281	1243	5	319	1754	383
Growth Adj:	1.00	1.00	1.00	1.00	1.00	1.00	1.00	1.00	1.00	1.00	1.00	1.00
Initial Bse:	21	467	368	251	278	193	281	1243	5	319	1754	383
Added Vol:	0	0	0	0	0	0	0	0	0	0	0	0
PasserByVol:	0	0	0	0	0	0	0	0	0	0	0	0
Initial Fut:	21	467	368	251	278	193	281	1243	5	319	1754	383
User Adj:	1.00	1.00	1.00	1.00	1.00	1.00	1.00	1.00	1.00	1.00	1.00	1.00
PHF Adj:	1.00	1.00	1.00	1.00	1.00	1.00	1.00	1.00	1.00	1.00	1.00	1.00
PHF Volume:	21	467	368	251	278	193	281	1243	5	319	1754	383
Reduct Vol:	0	0	0	0	0	0	0	0	0	0	0	0
Reduced Vol:	21	467	368	251	278	193	281	1243	5	319	1754	383
PCE Adj:	1.00	1.00	1.00	1.00	1.00	1.00	1.00	1.00	1.00	1.00	1.00	1.00
MLF Adj:	1.00	1.00	1.00	1.00	1.00	1.00	1.00	1.00	1.00	1.00	1.00	1.00
FinalVolume:	21	467	368	251	278	193	281	1243	5	319	1754	383
Saturation Flow Module:												
Sat/Lane:	1900	1900	1900	1900	1900	1900	1900	1900	1900	1900	1900	1900
Adjustment:	0.95	1.00	0.85	0.95	1.00	0.85	0.95	0.91	0.91	0.95	0.89	0.89
Lanes:	1.00	1.00	1.00	1.00	1.00	1.00	1.00	2.99	0.01	1.00	2.46	0.54
Final Sat.:	1805	1900	1615	1805	1900	1615	1805	5161	21	1805	4142	905
Capacity Analysis Module:												
Vol/Sat:	0.01	0.25	0.23	0.14	0.15	0.12	0.16	0.24	0.24	0.18	0.42	0.42
Crit Moves:		****		****			****				****	
Green/Cycle:	0.11	0.21	0.43	0.12	0.23	0.23	0.14	0.29	0.29	0.21	0.37	0.37
Volume/Cap:	0.11	1.15	0.53	1.15	0.65	0.53	1.15	0.83	0.83	0.83	1.15	1.15
Delay/Veh:	40.4	131	22.0	150.3	38.4	35.4	146.4	37.0	37.0	51.3	105	104.8
User DelAdj:	1.00	1.00	1.00	1.00	1.00	1.00	1.00	1.00	1.00	1.00	1.00	1.00
AdjDel/Veh:	40.4	131	22.0	150.3	38.4	35.4	146.4	37.0	37.0	51.3	105	104.8
LOS by Move:	D	F	C	F	D	D	F	D	D	D	F	F
HCM2kAvgQ:	1	25	9	15	9	6	16	16	16	12	40	40

Note: Queue reported is the number of cars per lane.

Overlook Parkway Extension
Future Alt 4
AM Peak Hour

Level Of Service Computation Report
2000 HCM Operations Method (Future Volume Alternative)

Intersection #13 Alessandro Blvd/Arlington Ave

Cycle (sec): 100 | Critical Vol./Cap.(X): 0.972
Loss Time (sec): 16 (Y+R=4.0 sec) | Average Delay (sec/veh): 50.3
Optimal Cycle: 130 | Level Of Service: D

Street Name:	Alessandro Blvd						Arlington Ave					
Approach:	North Bound			South Bound			East Bound			West Bound		
Movement:	L	T	R	L	T	R	L	T	R	L	T	R
Control:	Protected			Protected			Protected			Protected		
Rights:	Ovl			Include			Ovl			Ovl		
Min. Green:	7	7	7	7	7	7	7	7	7	7	7	7
Lanes:	2 0	2 0	1	2 0	2 1	0	1 0	2 0	2	2 0	2 0	1
Volume Module:												
Base Vol:	1339	1229	473	477	581	64	40	971	761	135	879	308
Growth Adj:	1.00	1.00	1.00	1.00	1.00	1.00	1.00	1.00	1.00	1.00	1.00	1.00
Initial Bse:	1339	1229	473	477	581	64	40	971	761	135	879	308
Added Vol:	0	0	0	0	0	0	0	0	0	0	0	0
PasserByVol:	0	0	0	0	0	0	0	0	0	0	0	0
Initial Fut:	1339	1229	473	477	581	64	40	971	761	135	879	308
User Adj:	1.00	1.00	1.00	1.00	1.00	1.00	1.00	1.00	1.00	1.00	1.00	1.00
PHF Adj:	1.00	1.00	1.00	1.00	1.00	1.00	1.00	1.00	1.00	1.00	1.00	1.00
PHF Volume:	1339	1229	473	477	581	64	40	971	761	135	879	308
Reduct Vol:	0	0	0	0	0	0	0	0	0	0	0	0
Reduced Vol:	1339	1229	473	477	581	64	40	971	761	135	879	308
PCE Adj:	1.00	1.00	1.00	1.00	1.00	1.00	1.00	1.00	1.00	1.00	1.00	1.00
MLF Adj:	1.00	1.00	1.00	1.00	1.00	1.00	1.00	1.00	1.00	1.00	1.00	1.00
FinalVolume:	1339	1229	473	477	581	64	40	971	761	135	879	308
Saturation Flow Module:												
Sat/Lane:	1900	1900	1900	1900	1900	1900	1900	1900	1900	1900	1900	1900
Adjustment:	0.92	0.95	0.85	0.92	0.90	0.90	0.95	0.95	0.75	0.92	0.95	0.85
Lanes:	2.00	2.00	1.00	2.00	2.70	0.30	1.00	2.00	2.00	2.00	2.00	1.00
Final Sat.:	3502	3610	1615	3502	4602	507	1805	3610	2842	3502	3610	1615
Capacity Analysis Module:												
Vol/Sat:	0.38	0.34	0.29	0.14	0.13	0.13	0.02	0.27	0.27	0.04	0.24	0.19
Crit Moves:	****				****			****		****		
Green/Cycle:	0.38	0.36	0.43	0.14	0.13	0.13	0.08	0.27	0.64	0.07	0.26	0.41
Volume/Cap:	1.01	0.95	0.68	0.95	1.01	1.01	0.30	1.01	0.42	0.55	0.93	0.47
Delay/Veh:	58.2	45.2	25.8	69.6	81.8	81.8	45.0	68.2	8.8	47.7	51.6	22.4
User DelAdj:	1.00	1.00	1.00	1.00	1.00	1.00	1.00	1.00	1.00	1.00	1.00	1.00
AdjDel/Veh:	58.2	45.2	25.8	69.6	81.8	81.8	45.0	68.2	8.8	47.7	51.6	22.4
LOS by Move:	E	D	C	E	F	F	D	E	A	D	D	C
HCM2kAvgQ:	29	24	13	12	12	12	1	23	7	3	18	7

Note: Queue reported is the number of cars per lane.

Overlook Parkway Extension
Future Alt 4
AM Peak Hour

Level Of Service Computation Report
2000 HCM Operations Method (Future Volume Alternative)

Intersection #14 Alessandro Blvd/Overlook Pkwy

Cycle (sec): 100 Critical Vol./Cap.(X): 1.507
Loss Time (sec): 16 (Y+R=4.0 sec) Average Delay (sec/veh): 174.3
Optimal Cycle: 130 Level Of Service: F

Street Name:	Alessandro Blvd						Overlook Pkwy					
Approach:	North Bound			South Bound			East Bound			West Bound		
Movement:	L	T	R	L	T	R	L	T	R	L	T	R
Control:	Protected			Protected			Protected			Protected		
Rights:	Include			Include			Include			Include		
Min. Green:	7	7	7	7	7	7	7	7	7	7	7	7
Lanes:	1 0	3 0	1	1 0	2 1	0	1 0	1 1	0	2 0	1 1	0
Volume Module:												
Base Vol:	568	2686	1175	4	1309	81	157	87	621	488	215	11
Growth Adj:	1.00	1.00	1.00	1.00	1.00	1.00	1.00	1.00	1.00	1.00	1.00	1.00
Initial Bse:	568	2686	1175	4	1309	81	157	87	621	488	215	11
Added Vol:	0	0	0	0	0	0	0	0	0	0	0	0
PasserByVol:	0	0	0	0	0	0	0	0	0	0	0	0
Initial Fut:	568	2686	1175	4	1309	81	157	87	621	488	215	11
User Adj:	1.00	1.00	1.00	1.00	1.00	1.00	1.00	1.00	1.00	1.00	1.00	1.00
PHF Adj:	1.00	1.00	1.00	1.00	1.00	1.00	1.00	1.00	1.00	1.00	1.00	1.00
PHF Volume:	568	2686	1175	4	1309	81	157	87	621	488	215	11
Reduct Vol:	0	0	0	0	0	0	0	0	0	0	0	0
Reduced Vol:	568	2686	1175	4	1309	81	157	87	621	488	215	11
PCE Adj:	1.00	1.00	1.00	1.00	1.00	1.00	1.00	1.00	1.00	1.00	1.00	1.00
MLF Adj:	1.00	1.00	1.00	1.00	1.00	1.00	1.00	1.00	1.00	1.00	1.00	1.00
FinalVolume:	568	2686	1175	4	1309	81	157	87	621	488	215	11
Saturation Flow Module:												
Sat/Lane:	1900	1900	1900	1900	1900	1900	1900	1900	1900	1900	1900	1900
Adjustment:	0.95	0.91	0.85	0.95	0.90	0.90	0.95	0.82	0.82	0.92	0.94	0.94
Lanes:	1.00	3.00	1.00	1.00	2.83	0.17	1.00	1.00	1.00	2.00	1.90	0.10
Final Sat.:	1805	5187	1615	1805	4841	300	1805	1567	1567	3502	3410	174
Capacity Analysis Module:												
Vol/Sat:	0.31	0.52	0.73	0.00	0.27	0.27	0.09	0.06	0.40	0.14	0.06	0.06
Crit Moves:			****	****					****	****		
Green/Cycle:	0.28	0.44	0.44	0.07	0.24	0.24	0.18	0.24	0.24	0.08	0.15	0.15
Volume/Cap:	1.14	1.17	1.64	0.03	1.14	1.14	0.48	0.23	1.64	1.64	0.43	0.43
Delay/Veh:	120.8	108	322.4	43.4	111	111.3	37.9	30.5	336.5	348.8	39.5	39.5
User DelAdj:	1.00	1.00	1.00	1.00	1.00	1.00	1.00	1.00	1.00	1.00	1.00	1.00
AdjDel/Veh:	120.8	108	322.4	43.4	111	111.3	37.9	30.5	336.5	348.8	39.5	39.5
LOS by Move:	F	F	F	D	F	F	D	C	F	F	D	D
HCM2kAvgQ:	30	50	92	0	27	27	5	2	52	21	4	4

Note: Queue reported is the number of cars per lane.

Overlook Parkway Extension
Future Alt 4
AM Peak Hour

Level Of Service Computation Report
2000 HCM Operations Method (Future Volume Alternative)

Intersection #15 Alessandro Blvd/Trautwein Rd

Cycle (sec): 100 Critical Vol./Cap.(X): 1.011
Loss Time (sec): 12 (Y+R=4.0 sec) Average Delay (sec/veh): 69.2
Optimal Cycle: 130 Level Of Service: E

Street Name:	Alessandro Blvd						Trautwein Rd					
Approach:	North Bound			South Bound			East Bound			West Bound		
Movement:	L	T	R	L	T	R	L	T	R	L	T	R
Control:	Protected			Protected			Protected			Protected		
Rights:	Include			Ignore			Ignore			Include		
Min. Green:	7	7	7	7	7	7	7	7	7	7	7	7
Lanes:	2 0	3 0	0	0 0	3 0	1	3 0	0 0	1	0 0	0 0	0
Volume Module:												
Base Vol:	73	2215	0	0	1494	741	2432	0	176	0	0	0
Growth Adj:	1.00	1.00	1.00	1.00	1.00	1.00	1.00	1.00	1.00	1.00	1.00	1.00
Initial Bse:	73	2215	0	0	1494	741	2432	0	176	0	0	0
Added Vol:	0	0	0	0	0	0	0	0	0	0	0	0
PasserByVol:	0	0	0	0	0	0	0	0	0	0	0	0
Initial Fut:	73	2215	0	0	1494	741	2432	0	176	0	0	0
User Adj:	1.00	1.00	1.00	1.00	1.00	0.00	1.00	1.00	0.00	1.00	1.00	1.00
PHF Adj:	1.00	1.00	1.00	1.00	1.00	0.00	1.00	1.00	0.00	1.00	1.00	1.00
PHF Volume:	73	2215	0	0	1494	0	2432	0	0	0	0	0
Reduct Vol:	0	0	0	0	0	0	0	0	0	0	0	0
Reduced Vol:	73	2215	0	0	1494	0	2432	0	0	0	0	0
PCE Adj:	1.00	1.00	1.00	1.00	1.00	0.00	1.00	1.00	0.00	1.00	1.00	1.00
MLF Adj:	1.00	1.00	1.00	1.00	1.00	0.00	1.00	1.00	0.00	1.00	1.00	1.00
FinalVolume:	73	2215	0	0	1494	0	2432	0	0	0	0	0
Saturation Flow Module:												
Sat/Lane:	1900	1900	1900	1900	1900	1900	1900	1900	1900	1900	1900	1900
Adjustment:	0.92	0.91	1.00	1.00	0.91	1.00	0.92	1.00	1.00	1.00	1.00	1.00
Lanes:	2.00	3.00	0.00	0.00	3.00	1.00	3.00	0.00	1.00	0.00	0.00	0.00
Final Sat.:	3502	5187	0	0	5187	1900	5253	0	1900	0	0	0
Capacity Analysis Module:												
Vol/Sat:	0.02	0.43	0.00	0.00	0.29	0.00	0.46	0.00	0.00	0.00	0.00	0.00
Crit Moves:		****		****			****					
Green/Cycle:	0.09	0.39	0.00	0.00	0.37	0.00	0.42	0.00	0.00	0.00	0.00	0.00
Volume/Cap:	0.23	1.10	0.00	0.00	0.78	0.00	1.10	0.00	0.00	0.00	0.00	0.00
Delay/Veh:	42.7	83.4	0.0	0.0	30.1	0.0	81.1	0.0	0.0	0.0	0.0	0.0
User DelAdj:	1.00	1.00	1.00	1.00	1.00	1.00	1.00	1.00	1.00	1.00	1.00	1.00
AdjDel/Veh:	42.7	83.4	0.0	0.0	30.1	0.0	81.1	0.0	0.0	0.0	0.0	0.0
LOS by Move:	D	F	A	A	C	A	F	A	A	A	A	A
HCM2kAvgQ:	1	38	0	0	17	0	39	0	0	0	0	0

Note: Queue reported is the number of cars per lane.

Overlook Parkway Extension
Future Alt 4
AM Peak Hour

Level Of Service Computation Report
2000 HCM 4-Way Stop Method (Future Volume Alternative)

Intersection #16 Crystal View Ter/Overlook Pkwy

Cycle (sec): 100 Critical Vol./Cap.(X): 0.742
Loss Time (sec): 0 (Y+R=4.0 sec) Average Delay (sec/veh): 21.2
Optimal Cycle: 0 Level Of Service: C

Street Name:	Crystal View Ter							Overlook Pkwy					
Approach:	North Bound			South Bound			East Bound			West Bound			
Movement:	L	- T	- R	L	- T	- R	L	- T	- R	L	- T	- R	
Control:	Stop Sign			Stop Sign			Stop Sign			Stop Sign			
Rights:	Include			Include			Include			Include			
Min. Green:	7	7	7	7	7	7	7	7	7	7	7	7	
Lanes:	0 0	1! 0	0	0 0	1! 0	0	1 0	1 1	0	1 0	1 1	0	
Volume Module:													
Base Vol:	94	0	24	0	0	0	0	792	29	2	893	0	
Growth Adj:	1.00	1.00	1.00	1.00	1.00	1.00	1.00	1.00	1.00	1.00	1.00	1.00	
Initial Bse:	94	0	24	0	0	0	0	792	29	2	893	0	
Added Vol:	0	0	0	0	0	0	0	0	0	0	0	0	
PasserByVol:	0	0	0	0	0	0	0	0	0	0	0	0	
Initial Fut:	94	0	24	0	0	0	0	792	29	2	893	0	
User Adj:	1.00	1.00	1.00	1.00	1.00	1.00	1.00	1.00	1.00	1.00	1.00	1.00	
PHF Adj:	1.00	1.00	1.00	1.00	1.00	1.00	1.00	1.00	1.00	1.00	1.00	1.00	
PHF Volume:	94	0	24	0	0	0	0	792	29	2	893	0	
Reduct Vol:	0	0	0	0	0	0	0	0	0	0	0	0	
Reduced Vol:	94	0	24	0	0	0	0	792	29	2	893	0	
PCE Adj:	1.00	1.00	1.00	1.00	1.00	1.00	1.00	1.00	1.00	1.00	1.00	1.00	
MLF Adj:	1.00	1.00	1.00	1.00	1.00	1.00	1.00	1.00	1.00	1.00	1.00	1.00	
FinalVolume:	94	0	24	0	0	0	0	792	29	2	893	0	
Saturation Flow Module:													
Adjustment:	1.00	1.00	1.00	1.00	1.00	1.00	1.00	1.00	1.00	1.00	1.00	1.00	
Lanes:	0.80	0.00	0.20	0.00	1.00	0.00	1.00	1.93	0.07	1.00	2.00	0.00	
Final Sat.:	418	0	107	0	478	0	540	1146	42	550	1204	0	
Capacity Analysis Module:													
Vol/Sat:	0.22	xxxx	0.22	xxxx	0.00	xxxx	0.00	0.69	0.69	0.00	0.74	xxxx	
Crit Moves:	****				****			****			****		
Delay/Veh:	11.6	0.0	11.6	0.0	0.0	0.0	0.0	20.6	20.4	9.1	23.2	0.0	
Delay Adj:	1.00	1.00	1.00	1.00	1.00	1.00	1.00	1.00	1.00	1.00	1.00	1.00	
AdjDel/Veh:	11.6	0.0	11.6	0.0	0.0	0.0	0.0	20.6	20.4	9.1	23.2	0.0	
LOS by Move:	B	*	B	*	*	*	*	C	C	A	C	*	
ApproachDel:	11.6			xxxxxx				20.6			23.1		
Delay Adj:	1.00			xxxxx				1.00			1.00		
ApprAdjDel:	11.6			xxxxxx				20.6			23.1		
LOS by Appr:	B			*				C			C		
AllWayAvgQ:	0.3	0.3	0.3	0.0	0.0	0.0	0.0	2.0	1.9	0.0	2.4	2.4	

Overlook Parkway Extension
Future Alt 4
AM Peak Hour

Note: Queue reported is the number of cars per lane.

Overlook Parkway Extension
Future Alt 4
AM Peak Hour

Level Of Service Computation Report
2000 HCM Unsignalized Method (Future Volume Alternative)

Intersection #17 Kingdom Dr/Overlook Pkwy

Average Delay (sec/veh): 19.8 Worst Case Level Of Service: F[152.0]

Street Name:	Kingdom Dr									Overlook Pkwy							
Approach:	North Bound				South Bound				East Bound				West Bound				
Movement:	L	-	T	-	R	L	-	T	-	R	L	-	T	-	R	L	-	T	-	R
Control:	Stop Sign				Stop Sign				Uncontrolled				Uncontrolled				
Rights:	Include				Include				Include				Include				
Lanes:	0	0	1!	0	0	1	0	0	0	0	1	0	1	1	0	1	0	1	1	0
Volume Module:																				
Base Vol:	119		0		130	7		0		0	0		707		50	36		894		0
Growth Adj:	1.00	1.00		1.00		1.00	1.00		1.00		1.00	1.00		1.00		1.00	1.00		1.00	
Initial Bse:	119		0		130	7		0		0	0		707		50	36		894		0
Added Vol:	0		0		0	0		0		0	0		0		0	0		0		0
PasserByVol:	0		0		0	0		0		0	0		0		0	0		0		0
Initial Fut:	119		0		130	7		0		0	0		707		50	36		894		0
User Adj:	1.00	1.00		1.00		1.00	1.00		1.00		1.00	1.00		1.00		1.00	1.00		1.00	
PHF Adj:	1.00	1.00		1.00		1.00	1.00		1.00		1.00	1.00		1.00		1.00	1.00		1.00	
PHF Volume:	119		0		130	7		0		0	0		707		50	36		894		0
Reduct Vol:	0		0		0	0		0		0	0		0		0	0		0		0
FinalVolume:	119		0		130	7		0		0	0		707		50	36		894		0
Critical Gap Module:																				
Critical Gp:	7.5	6.5		6.9		7.5	xxxx	xxxxx	xxxxx	xxxx	xxxxx		4.1	xxxx	xxxxx					
FollowUpTim:	3.5	4.0		3.3		3.5	xxxx	xxxxx	xxxxx	xxxx	xxxxx		2.2	xxxx	xxxxx					
Capacity Module:																				
Cnflict Vol:	1251	1698		379		1320	xxxx	xxxxx	xxxx	xxxx	xxxxx		757	xxxx	xxxxx					
Potent Cap.:	131	93		625		117	xxxx	xxxxx	xxxx	xxxx	xxxxx		863	xxxx	xxxxx					
Move Cap.:	127	89		625		90	xxxx	xxxxx	xxxx	xxxx	xxxxx		863	xxxx	xxxxx					
Volume/Cap:	0.94	0.00		0.21		0.08	xxxx	xxxx	xxxx	xxxx	xxxx		0.04	xxxx	xxxx					
Level Of Service Module:																				
2Way95thQ:	xxxx	xxxx		xxxxx		0.2	xxxx	xxxxx	xxxx	xxxx	xxxxx		0.1	xxxx	xxxxx					
Control Del:	xxxxx	xxxx		xxxxx		48.6	xxxx	xxxxx	xxxxx	xxxx	xxxxx		9.4	xxxx	xxxxx					
LOS by Move:	*	*		*		E	*		*	*	*		A	*	*					
Movement:	LT - LTR - RT					LT - LTR - RT				LT - LTR - RT				LT - LTR - RT						
Shared Cap.:	xxxx	218		xxxxx		xxxx	xxxx	xxxxx		xxxx	xxxx	xxxxx		xxxx	xxxx	xxxxx				
SharedQueue:	xxxxx	11.8		xxxxx		xxxxx	xxxx	xxxxx		xxxxx	xxxx	xxxxx		xxxxx	xxxx	xxxxx				
Shrd ConDel:	xxxxx	152		xxxxx		xxxxx	xxxx	xxxxx		xxxxx	xxxx	xxxxx		xxxxx	xxxx	xxxxx				
Shared LOS:	*	F		*		*	*		*	*	*		*	*	*					
ApproachDel:	152.0					48.6				xxxxxx				xxxxxx						
ApproachLOS:	F					E				*				*						

Note: Queue reported is the number of cars per lane.

Overlook Parkway Extension
Future Alt 4
AM Peak Hour

Level Of Service Computation Report
2000 HCM Unsignalized Method (Future Volume Alternative)

Intersection #18 Kingdom Dr/Green Orchard Pl

Average Delay (sec/veh): 2.6 Worst Case Level Of Service: A[9.6]

Street Name:	Kingdom Dr									Green Orchard Pl							
Approach:	North Bound				South Bound				East Bound				West Bound				
Movement:	L	-	T	-	R	L	-	T	-	R	L	-	T	-	R	L	-	T	-	R
Control:	Uncontrolled				Uncontrolled				Stop Sign				Stop Sign				
Rights:	Include				Include				Include				Include				
Lanes:	0	0	0	1	0	0	1	0	0	0	0	0	0	0	0	0	0	1!	0	0
Volume Module:																				
Base Vol:	0	176		3		14	61		0		0	0		0		2	0		76	
Growth Adj:	1.00	1.00		1.00		1.00	1.00		1.00		1.00	1.00		1.00		1.00	1.00		1.00	
Initial Bse:	0	176		3		14	61		0		0	0		0		2	0		76	
Added Vol:	0	0		0		0	0		0		0	0		0		0	0		0	
PasserByVol:	0	0		0		0	0		0		0	0		0		0	0		0	
Initial Fut:	0	176		3		14	61		0		0	0		0		2	0		76	
User Adj:	1.00	1.00		1.00		1.00	1.00		1.00		1.00	1.00		1.00		1.00	1.00		1.00	
PHF Adj:	1.00	1.00		1.00		1.00	1.00		1.00		1.00	1.00		1.00		1.00	1.00		1.00	
PHF Volume:	0	176		3		14	61		0		0	0		0		2	0		76	
Reduct Vol:	0	0		0		0	0		0		0	0		0		0	0		0	
FinalVolume:	0	176		3		14	61		0		0	0		0		2	0		76	
Critical Gap Module:																				
Critical Gp:	xxxxx	xxxx		xxxxx		4.1	xxxx	xxxxx	xxxxx	xxxx	xxxxx		6.4	6.5		6.2				
FollowUpTim:	xxxxx	xxxx		xxxxx		2.2	xxxx	xxxxx	xxxxx	xxxx	xxxxx		3.5	4.0		3.3				
Capacity Module:																				
Cnflict Vol:	xxxx	xxxx		xxxxx		179	xxxx	xxxxx	xxxx	xxxx	xxxxx		267	267		178				
Potent Cap.:	xxxx	xxxx		xxxxx		1409	xxxx	xxxxx	xxxx	xxxx	xxxxx		727	643		871				
Move Cap.:	xxxx	xxxx		xxxxx		1409	xxxx	xxxxx	xxxx	xxxx	xxxxx		721	636		871				
Volume/Cap:	xxxx	xxxx		xxxx		0.01	xxxx	xxxx	xxxx	xxxx	xxxx		0.00	0.00		0.09				
Level Of Service Module:																				
2Way95thQ:	xxxx	xxxx		xxxxx		0.0	xxxx	xxxxx	xxxx	xxxx	xxxxx		xxxx	xxxx		xxxxx				
Control Del:	xxxxx	xxxx		xxxxx		7.6	xxxx	xxxxx	xxxxx	xxxx	xxxxx		xxxxx	xxxx		xxxxx				
LOS by Move:	*	*		*		A	*		*	*	*		*	*		*				
Movement:	LT - LTR - RT					LT - LTR - RT				LT - LTR - RT				LT - LTR - RT						
Shared Cap.:	xxxx	xxxx		xxxxx		xxxx	xxxx	xxxxx		xxxx	xxxx	xxxxx		xxxx		866	xxxxx			
SharedQueue:	xxxxx	xxxx		xxxxx		0.0	xxxx	xxxxx	xxxxx	xxxx	xxxxx		xxxxx	0.3	xxxxx					
Shrd ConDel:	xxxxx	xxxx		xxxxx		7.6	xxxx	xxxxx	xxxxx	xxxx	xxxxx		xxxxx	9.6	xxxxx					
Shared LOS:	*	*		*		A	*		*	*	*		*	A	*					
ApproachDel:	xxxxxx					xxxxxx				xxxxxx				9.6						
ApproachLOS:	*					*				*				A						

Note: Queue reported is the number of cars per lane.

Overlook Parkway Extension
Future Alt 4
AM Peak Hour

Level Of Service Computation Report
2000 HCM Operations Method (Future Volume Alternative)

Intersection #19 Trautwein Rd/John F. Kennedy Dr

Cycle (sec): 100 Critical Vol./Cap.(X): 1.103
Loss Time (sec): 16 (Y+R=4.0 sec) Average Delay (sec/veh): 87.0
Optimal Cycle: 130 Level Of Service: F

Street Name:	Trautwein Rd						John F. Kennedy Dr					
Approach:	North Bound			South Bound			East Bound			West Bound		
Movement:	L -	T -	R	L -	T -	R	L -	T -	R	L -	T -	R
Control:	Protected			Protected			Protected			Protected		
Rights:	Include			Ovl			Include			Include		
Min. Green:	7	7	7	7	7	7	7	7	7	7	7	7
Lanes:	1 0	2 0	1	1 0	2 0	1	2 0	1 0	1	1 0	0 1	0
Volume Module:												
Base Vol:	150	2179	83	8	782	760	773	91	101	126	112	64
Growth Adj:	1.00	1.00	1.00	1.00	1.00	1.00	1.00	1.00	1.00	1.00	1.00	1.00
Initial Bse:	150	2179	83	8	782	760	773	91	101	126	112	64
Added Vol:	0	0	0	0	0	0	0	0	0	0	0	0
PasserByVol:	0	0	0	0	0	0	0	0	0	0	0	0
Initial Fut:	150	2179	83	8	782	760	773	91	101	126	112	64
User Adj:	1.00	1.00	1.00	1.00	1.00	1.00	1.00	1.00	1.00	1.00	1.00	1.00
PHF Adj:	1.00	1.00	1.00	1.00	1.00	1.00	1.00	1.00	1.00	1.00	1.00	1.00
PHF Volume:	150	2179	83	8	782	760	773	91	101	126	112	64
Reduct Vol:	0	0	0	0	0	0	0	0	0	0	0	0
Reduced Vol:	150	2179	83	8	782	760	773	91	101	126	112	64
PCE Adj:	1.00	1.00	1.00	1.00	1.00	1.00	1.00	1.00	1.00	1.00	1.00	1.00
MLF Adj:	1.00	1.00	1.00	1.00	1.00	1.00	1.00	1.00	1.00	1.00	1.00	1.00
FinalVolume:	150	2179	83	8	782	760	773	91	101	126	112	64
Saturation Flow Module:												
Sat/Lane:	1900	1900	1900	1900	1900	1900	1900	1900	1900	1900	1900	1900
Adjustment:	0.95	0.95	0.85	0.95	0.95	0.85	0.92	1.00	0.85	0.95	0.95	0.95
Lanes:	1.00	2.00	1.00	1.00	2.00	1.00	2.00	1.00	1.00	1.00	0.64	0.36
Final Sat.:	1805	3610	1615	1805	3610	1615	3502	1900	1615	1805	1143	653
Capacity Analysis Module:												
Vol/Sat:	0.08	0.60	0.05	0.00	0.22	0.47	0.22	0.05	0.06	0.07	0.10	0.10
Crit Moves:		****		****			****				****	
Green/Cycle:	0.14	0.50	0.50	0.07	0.43	0.61	0.18	0.13	0.13	0.13	0.08	0.08
Volume/Cap:	0.58	1.20	0.10	0.06	0.50	0.77	1.20	0.36	0.47	0.52	1.20	1.20
Delay/Veh:	43.3	119	13.0	43.6	21.0	17.6	144.4	40.3	41.7	42.5	183	183.1
User DelAdj:	1.00	1.00	1.00	1.00	1.00	1.00	1.00	1.00	1.00	1.00	1.00	1.00
AdjDel/Veh:	43.3	119	13.0	43.6	21.0	17.6	144.4	40.3	41.7	42.5	183	183.1
LOS by Move:	D	F	B	D	C	B	F	D	D	D	F	F
HCM2kAvgQ:	5	61	1	0	9	18	23	3	3	4	12	12

Note: Queue reported is the number of cars per lane.

Overlook Parkway Extension
Future Alt 4
AM Peak Hour

Level Of Service Computation Report
2000 HCM Operations Method (Future Volume Alternative)

Intersection #20 Washington St/Bradley St

Cycle (sec): 100 Critical Vol./Cap.(X): 0.812
Loss Time (sec): 12 (Y+R=4.0 sec) Average Delay (sec/veh): 25.8
Optimal Cycle: 80 Level Of Service: C

Street Name:	Washington St						Bradley St					
Approach:	North Bound			South Bound			East Bound			West Bound		
Movement:	L -	T -	R	L -	T -	R	L -	T -	R	L -	T -	R
Control:	Protected			Protected			Permitted			Permitted		
Rights:	Include			Include			Include			Include		
Min. Green:	7	7	7	7	7	7	7	7	7	7	7	7
Lanes:	1 0	1 1	0	1 0	1 1	0	0 0	1! 0	0	0 0	1! 0	0
Volume Module:												
Base Vol:	364	1814	28	70	691	13	9	21	136	37	60	167
Growth Adj:	1.00	1.00	1.00	1.00	1.00	1.00	1.00	1.00	1.00	1.00	1.00	1.00
Initial Bse:	364	1814	28	70	691	13	9	21	136	37	60	167
Added Vol:	0	0	0	0	0	0	0	0	0	0	0	0
PasserByVol:	0	0	0	0	0	0	0	0	0	0	0	0
Initial Fut:	364	1814	28	70	691	13	9	21	136	37	60	167
User Adj:	1.00	1.00	1.00	1.00	1.00	1.00	1.00	1.00	1.00	1.00	1.00	1.00
PHF Adj:	1.00	1.00	1.00	1.00	1.00	1.00	1.00	1.00	1.00	1.00	1.00	1.00
PHF Volume:	364	1814	28	70	691	13	9	21	136	37	60	167
Reduct Vol:	0	0	0	0	0	0	0	0	0	0	0	0
Reduced Vol:	364	1814	28	70	691	13	9	21	136	37	60	167
PCE Adj:	1.00	1.00	1.00	1.00	1.00	1.00	1.00	1.00	1.00	1.00	1.00	1.00
MLF Adj:	1.00	1.00	1.00	1.00	1.00	1.00	1.00	1.00	1.00	1.00	1.00	1.00
FinalVolume:	364	1814	28	70	691	13	9	21	136	37	60	167
Saturation Flow Module:												
Sat/Lane:	1900	1900	1900	1900	1900	1900	1900	1900	1900	1900	1900	1900
Adjustment:	0.95	0.95	0.95	0.95	0.95	0.95	0.87	0.87	0.87	0.85	0.85	0.85
Lanes:	1.00	1.97	0.03	1.00	1.96	0.04	0.05	0.13	0.82	0.14	0.23	0.63
Final Sat.:	1805	3548	55	1805	3533	66	90	209	1353	225	365	1016
Capacity Analysis Module:												
Vol/Sat:	0.20	0.51	0.51	0.04	0.20	0.20	0.10	0.10	0.10	0.16	0.16	0.16
Crit Moves:		****		****							****	
Green/Cycle:	0.35	0.61	0.61	0.07	0.34	0.34	0.20	0.20	0.20	0.20	0.20	0.20
Volume/Cap:	0.58	0.83	0.83	0.55	0.58	0.58	0.51	0.51	0.51	0.83	0.83	0.83
Delay/Veh:	28.1	18.2	18.2	50.3	28.1	28.1	37.2	37.2	37.2	55.7	55.7	55.7
User DelAdj:	1.00	1.00	1.00	1.00	1.00	1.00	1.00	1.00	1.00	1.00	1.00	1.00
AdjDel/Veh:	28.1	18.2	18.2	50.3	28.1	28.1	37.2	37.2	37.2	55.7	55.7	55.7
LOS by Move:	C	B	B	D	C	C	D	D	D	E	E	E
HCM2kAvgQ:	10	26	26	3	10	10	5	5	5	10	10	10

Note: Queue reported is the number of cars per lane.

Overlook Parkway Extension
Future Alt 4
AM Peak Hour

Level Of Service Computation Report
2000 HCM Operations Method (Future Volume Alternative)

Intersection #21 Alessandro Blvd/Via Vista Dr

Cycle (sec): 100 Critical Vol./Cap.(X): 0.861
Loss Time (sec): 16 (Y+R=4.0 sec) Average Delay (sec/veh): 28.3
Optimal Cycle: 103 Level Of Service: C

Street Name:	Alessandro Blvd						Via Vista Dr					
Approach:	North Bound			South Bound			East Bound			West Bound		
Movement:	L - T - R			L - T - R			L - T - R			L - T - R		
Control:	Protected			Protected			Protected			Protected		
Rights:	Include			Include			Include			Include		
Min. Green:	7	7	7	7	7	7	7	7	7	7	7	7
Lanes:	1 0	2 1	0	1 0	2 1	0	1 0	1 0	1	1 0	1 0	1
Volume Module:												
Base Vol:	52	2677	7	26	1321	65	224	55	70	19	38	109
Growth Adj:	1.00	1.00	1.00	1.00	1.00	1.00	1.00	1.00	1.00	1.00	1.00	1.00
Initial Bse:	52	2677	7	26	1321	65	224	55	70	19	38	109
Added Vol:	0	0	0	0	0	0	0	0	0	0	0	0
PasserByVol:	0	0	0	0	0	0	0	0	0	0	0	0
Initial Fut:	52	2677	7	26	1321	65	224	55	70	19	38	109
User Adj:	1.00	1.00	1.00	1.00	1.00	1.00	1.00	1.00	1.00	1.00	1.00	1.00
PHF Adj:	1.00	1.00	1.00	1.00	1.00	1.00	1.00	1.00	1.00	1.00	1.00	1.00
PHF Volume:	52	2677	7	26	1321	65	224	55	70	19	38	109
Reduct Vol:	0	0	0	0	0	0	0	0	0	0	0	0
Reduced Vol:	52	2677	7	26	1321	65	224	55	70	19	38	109
PCE Adj:	1.00	1.00	1.00	1.00	1.00	1.00	1.00	1.00	1.00	1.00	1.00	1.00
MLF Adj:	1.00	1.00	1.00	1.00	1.00	1.00	1.00	1.00	1.00	1.00	1.00	1.00
FinalVolume:	52	2677	7	26	1321	65	224	55	70	19	38	109
Saturation Flow Module:												
Sat/Lane:	1900	1900	1900	1900	1900	1900	1900	1900	1900	1900	1900	1900
Adjustment:	0.95	0.91	0.91	0.95	0.90	0.90	0.95	1.00	0.85	0.95	1.00	0.85
Lanes:	1.00	2.99	0.01	1.00	2.86	0.14	1.00	1.00	1.00	1.00	1.00	1.00
Final Sat.:	1805	5173	14	1805	4909	242	1805	1900	1615	1805	1900	1615
Capacity Analysis Module:												
Vol/Sat:	0.03	0.52	0.52	0.01	0.27	0.27	0.12	0.03	0.04	0.01	0.02	0.07
Crit Moves:		****		****			****					****
Green/Cycle:	0.13	0.56	0.56	0.07	0.50	0.50	0.13	0.10	0.10	0.10	0.07	0.07
Volume/Cap:	0.22	0.92	0.92	0.21	0.54	0.54	0.92	0.28	0.42	0.10	0.27	0.92
Delay/Veh:	39.4	25.3	25.3	44.7	17.2	17.2	79.6	42.1	43.6	40.8	44.9	104.5
User DelAdj:	1.00	1.00	1.00	1.00	1.00	1.00	1.00	1.00	1.00	1.00	1.00	1.00
AdjDel/Veh:	39.4	25.3	25.3	44.7	17.2	17.2	79.6	42.1	43.6	40.8	44.9	104.5
LOS by Move:	D	C	C	D	B	B	E	D	D	D	D	F
HCM2kAvgQ:	2	32	32	1	11	11	10	2	2	1	1	6

Note: Queue reported is the number of cars per lane.

Overlook Parkway Extension
Future Alt 4
AM Peak Hour

Level Of Service Computation Report
2000 HCM 4-Way Stop Method (Future Volume Alternative)

Intersection #23 Mary St/Hawarden Dr

Cycle (sec): 100 Critical Vol./Cap.(X): 0.341
Loss Time (sec): 0 (Y+R=4.0 sec) Average Delay (sec/veh): 9.6
Optimal Cycle: 0 Level Of Service: A

Street Name:	Mary St						Hawarden Dr					
Approach:	North Bound			South Bound			East Bound			West Bound		
Movement:	L - T - R			L - T - R			L - T - R			L - T - R		
Control:	Stop Sign			Stop Sign			Stop Sign			Stop Sign		
Rights:	Include			Include			Include			Include		
Min. Green:	7	7	7	7	7	7	7	7	7	7	7	7
Lanes:	0 1	0 0	0	0 0	0 1	0	0 0	1! 0	0	0 0	0 0	0
Volume Module:												
Base Vol:	4	255	0	0	52	39	229	0	2	0	0	0
Growth Adj:	1.00	1.00	1.00	1.00	1.00	1.00	1.00	1.00	1.00	1.00	1.00	1.00
Initial Bse:	4	255	0	0	52	39	229	0	2	0	0	0
Added Vol:	0	0	0	0	0	0	0	0	0	0	0	0
PasserByVol:	0	0	0	0	0	0	0	0	0	0	0	0
Initial Fut:	4	255	0	0	52	39	229	0	2	0	0	0
User Adj:	1.00	1.00	1.00	1.00	1.00	1.00	1.00	1.00	1.00	1.00	1.00	1.00
PHF Adj:	1.00	1.00	1.00	1.00	1.00	1.00	1.00	1.00	1.00	1.00	1.00	1.00
PHF Volume:	4	255	0	0	52	39	229	0	2	0	0	0
Reduct Vol:	0	0	0	0	0	0	0	0	0	0	0	0
Reduced Vol:	4	255	0	0	52	39	229	0	2	0	0	0
PCE Adj:	1.00	1.00	1.00	1.00	1.00	1.00	1.00	1.00	1.00	1.00	1.00	1.00
MLF Adj:	1.00	1.00	1.00	1.00	1.00	1.00	1.00	1.00	1.00	1.00	1.00	1.00
FinalVolume:	4	255	0	0	52	39	229	0	2	0	0	0
Saturation Flow Module:												
Adjustment:	1.00	1.00	1.00	1.00	1.00	1.00	1.00	1.00	1.00	1.00	1.00	1.00
Lanes:	0.02	0.98	0.00	0.00	0.57	0.43	0.99	0.00	0.01	0.00	0.00	0.00
Final Sat.:	12	747	0	0	432	324	702	0	6	0	0	0
Capacity Analysis Module:												
Vol/Sat:	0.34	0.34	xxxx	xxxx	0.12	0.12	0.33	xxxx	0.33	xxxx	xxxx	xxxx
Crit Moves:		****			****		****					
Delay/Veh:	9.8	9.8	0.0	0.0	8.1	8.1	10.1	0.0	10.1	0.0	0.0	0.0
Delay Adj:	1.00	1.00	1.00	1.00	1.00	1.00	1.00	1.00	1.00	1.00	1.00	1.00
AdjDel/Veh:	9.8	9.8	0.0	0.0	8.1	8.1	10.1	0.0	10.1	0.0	0.0	0.0
LOS by Move:	A	A	*	*	A	A	B	*	B	*	*	*
ApproachDel:	9.8			8.1			10.1			xxxxxx		
Delay Adj:	1.00			1.00			1.00			xxxxx		
ApprAdjDel:	9.8			8.1			10.1			xxxxxx		
LOS by Appr:	A			A			B			*		
AllWayAvgQ:	0.5	0.5	0.5	0.1	0.1	0.1	0.4	0.4	0.4	0.0	0.0	0.0

Overlook Parkway Extension
Future Alt 4
AM Peak Hour

Note: Queue reported is the number of cars per lane.

Overlook Parkway Extension
Future Alt 4
AM Peak Hour

Level Of Service Computation Report
2000 HCM 4-Way Stop Method (Future Volume Alternative)

Intersection #24 Hawarden Dr/Overlook Pkwy

Cycle (sec):	100	Critical Vol./Cap.(X):	0.835
Loss Time (sec):	0 (Y+R=4.0 sec)	Average Delay (sec/veh):	24.4
Optimal Cycle:	0	Level Of Service:	C

Street Name:	Hawarden Dr							Overlook Pkwy					
Approach:	North Bound			South Bound			East Bound			West Bound			
Movement:	L	- T	- R	L	- T	- R	L	- T	- R	L	- T	- R	
Control:	Stop Sign			Stop Sign			Stop Sign			Stop Sign			
Rights:	Include			Include			Include			Include			
Min. Green:	7	7	7	7	7	7	7	7	7	7	7	7	
Lanes:	0 0	1! 0	0	0 0	1! 0	0	1 0	1	1 0	1 0	1	1 0	
Volume Module:													
Base Vol:	67	62	5	15	4	25	81	661	41	1	908	71	
Growth Adj:	1.00	1.00	1.00	1.00	1.00	1.00	1.00	1.00	1.00	1.00	1.00	1.00	
Initial Bse:	67	62	5	15	4	25	81	661	41	1	908	71	
Added Vol:	0	0	0	0	0	0	0	0	0	0	0	0	
PasserByVol:	0	0	0	0	0	0	0	0	0	0	0	0	
Initial Fut:	67	62	5	15	4	25	81	661	41	1	908	71	
User Adj:	1.00	1.00	1.00	1.00	1.00	1.00	1.00	1.00	1.00	1.00	1.00	1.00	
PHF Adj:	1.00	1.00	1.00	1.00	1.00	1.00	1.00	1.00	1.00	1.00	1.00	1.00	
PHF Volume:	67	62	5	15	4	25	81	661	41	1	908	71	
Reduct Vol:	0	0	0	0	0	0	0	0	0	0	0	0	
Reduced Vol:	67	62	5	15	4	25	81	661	41	1	908	71	
PCE Adj:	1.00	1.00	1.00	1.00	1.00	1.00	1.00	1.00	1.00	1.00	1.00	1.00	
MLF Adj:	1.00	1.00	1.00	1.00	1.00	1.00	1.00	1.00	1.00	1.00	1.00	1.00	
FinalVolume:	67	62	5	15	4	25	81	661	41	1	908	71	
Saturation Flow Module:													
Adjustment:	1.00	1.00	1.00	1.00	1.00	1.00	1.00	1.00	1.00	1.00	1.00	1.00	
Lanes:	0.50	0.46	0.04	0.34	0.09	0.57	1.00	1.88	0.12	1.00	1.85	0.15	
Final Sat.:	253	234	19	168	45	280	511	1052	66	534	1088	86	
Capacity Analysis Module:													
Vol/Sat:	0.26	0.26	0.26	0.09	0.09	0.09	0.16	0.63	0.62	0.00	0.83	0.83	
Crit Moves:		****			****			****			****		
Delay/Veh:	12.3	12.3	12.3	10.6	10.6	10.6	10.9	18.9	18.6	9.4	31.8	30.8	
Delay Adj:	1.00	1.00	1.00	1.00	1.00	1.00	1.00	1.00	1.00	1.00	1.00	1.00	
AdjDel/Veh:	12.3	12.3	12.3	10.6	10.6	10.6	10.9	18.9	18.6	9.4	31.8	30.8	
LOS by Move:	B	B	B	B	B	B	B	C	C	A	D	D	
ApproachDel:	12.3			10.6			18.0			31.7			
Delay Adj:	1.00			1.00			1.00			1.00			
ApprAdjDel:	12.3			10.6			18.0			31.7			
LOS by Appr:	B			B			C			D			
AllWayAvgQ:	0.3	0.3	0.3	0.1	0.1	0.1	0.2	1.5	1.5	0.0	3.8	3.6	

Overlook Parkway Extension
Future Alt 4
AM Peak Hour

Note: Queue reported is the number of cars per lane.

Overlook Parkway Extension
Future Alt 4
AM Peak Hour

Level Of Service Computation Report
2000 HCM 4-Way Stop Method (Future Volume Alternative)

Intersection #25 Crystal View Ter/Berry Rd

Cycle (sec): 100 | Critical Vol./Cap.(X): 0.309
Loss Time (sec): 0 (Y+R=4.0 sec) | Average Delay (sec/veh): 8.2
Optimal Cycle: 0 | Level Of Service: A

Street Name:	Crystal View Ter						Berry Rd					
Approach:	North Bound			South Bound			East Bound			West Bound		
Movement:	L -	T -	R	L -	T -	R	L -	T -	R	L -	T -	R
Control:	Stop Sign			Stop Sign			Stop Sign			Stop Sign		
Rights:	Include			Include			Include			Include		
Min. Green:	7	7	7	7	7	7	7	7	7	7	7	7
Lanes:	0 0	1! 0	0	0 1	0 0	0	0 0	0 1	0	0 0	1! 0	0
Volume Module:												
Base Vol:	4	96	196	19	17	0	0	2	8	39	2	22
Growth Adj:	1.00	1.00	1.00	1.00	1.00	1.00	1.00	1.00	1.00	1.00	1.00	1.00
Initial Bse:	4	96	196	19	17	0	0	2	8	39	2	22
Added Vol:	0	0	0	0	0	0	0	0	0	0	0	0
PasserByVol:	0	0	0	0	0	0	0	0	0	0	0	0
Initial Fut:	4	96	196	19	17	0	0	2	8	39	2	22
User Adj:	1.00	1.00	1.00	1.00	1.00	1.00	1.00	1.00	1.00	1.00	1.00	1.00
PHF Adj:	1.00	1.00	1.00	1.00	1.00	1.00	1.00	1.00	1.00	1.00	1.00	1.00
PHF Volume:	4	96	196	19	17	0	0	2	8	39	2	22
Reduct Vol:	0	0	0	0	0	0	0	0	0	0	0	0
Reduced Vol:	4	96	196	19	17	0	0	2	8	39	2	22
PCE Adj:	1.00	1.00	1.00	1.00	1.00	1.00	1.00	1.00	1.00	1.00	1.00	1.00
MLF Adj:	1.00	1.00	1.00	1.00	1.00	1.00	1.00	1.00	1.00	1.00	1.00	1.00
FinalVolume:	4	96	196	19	17	0	0	2	8	39	2	22
Saturation Flow Module:												
Adjustment:	1.00	1.00	1.00	1.00	1.00	1.00	1.00	1.00	1.00	1.00	1.00	1.00
Lanes:	0.01	0.32	0.67	0.53	0.47	0.00	0.00	0.20	0.80	0.62	0.03	0.35
Final Sat.:	13	311	634	419	375	0	0	161	645	469	24	265
Capacity Analysis Module:												
Vol/Sat:	0.31	0.31	0.31	0.05	0.05	xxxx	xxxx	0.01	0.01	0.08	0.08	0.08
Crit Moves:		****			****			****			****	
Delay/Veh:	8.3	8.3	8.3	7.6	7.6	0.0	0.0	7.2	7.2	7.8	7.8	7.8
Delay Adj:	1.00	1.00	1.00	1.00	1.00	1.00	1.00	1.00	1.00	1.00	1.00	1.00
AdjDel/Veh:	8.3	8.3	8.3	7.6	7.6	0.0	0.0	7.2	7.2	7.8	7.8	7.8
LOS by Move:	A	A	A	A	A	*	*	A	A	A	A	A
ApproachDel:	8.3			7.6			7.2			7.8		
Delay Adj:	1.00			1.00			1.00			1.00		
ApprAdjDel:	8.3			7.6			7.2			7.8		
LOS by Appr:	A			A			A			A		
AllWayAvgQ:	0.4	0.4	0.4	0.0	0.0	0.0	0.0	0.0	0.0	0.1	0.1	0.1

Overlook Parkway Extension
Future Alt 4
AM Peak Hour

Note: Queue reported is the number of cars per lane.

Overlook Parkway Extension
Future Alt 4
AM Peak Hour

Level Of Service Computation Report
2000 HCM 4-Way Stop Method (Future Volume Alternative)

Intersection #26 Corinthian Wy/Berry Rd

Cycle (sec): 100 | Critical Vol./Cap.(X): 0.259
Loss Time (sec): 0 (Y+R=4.0 sec) | Average Delay (sec/veh): 8.2
Optimal Cycle: 0 | Level Of Service: A

Street Name:	Corinthian Wy						Berry Rd					
Approach:	North Bound			South Bound			East Bound			West Bound		
Movement:	L	T	R	L	T	R	L	T	R	L	T	R
Control:	Stop Sign			Stop Sign			Stop Sign			Stop Sign		
Rights:	Include			Include			Include			Include		
Min. Green:	7	7	7	7	7	7	7	7	7	7	7	7
Lanes:	0 0	0 0	0	0 0	1! 0	0	0 1	0 0	0	0 0	0 1	0
Volume Module:												
Base Vol:	0	0	0	2	0	30	209	11	0	0	28	36
Growth Adj:	1.00	1.00	1.00	1.00	1.00	1.00	1.00	1.00	1.00	1.00	1.00	1.00
Initial Bse:	0	0	0	2	0	30	209	11	0	0	28	36
Added Vol:	0	0	0	0	0	0	0	0	0	0	0	0
PasserByVol:	0	0	0	0	0	0	0	0	0	0	0	0
Initial Fut:	0	0	0	2	0	30	209	11	0	0	28	36
User Adj:	1.00	1.00	1.00	1.00	1.00	1.00	1.00	1.00	1.00	1.00	1.00	1.00
PHF Adj:	1.00	1.00	1.00	1.00	1.00	1.00	1.00	1.00	1.00	1.00	1.00	1.00
PHF Volume:	0	0	0	2	0	30	209	11	0	0	28	36
Reduct Vol:	0	0	0	0	0	0	0	0	0	0	0	0
Reduced Vol:	0	0	0	2	0	30	209	11	0	0	28	36
PCE Adj:	1.00	1.00	1.00	1.00	1.00	1.00	1.00	1.00	1.00	1.00	1.00	1.00
MLF Adj:	1.00	1.00	1.00	1.00	1.00	1.00	1.00	1.00	1.00	1.00	1.00	1.00
FinalVolume:	0	0	0	2	0	30	209	11	0	0	28	36
Saturation Flow Module:												
Adjustment:	1.00	1.00	1.00	1.00	1.00	1.00	1.00	1.00	1.00	1.00	1.00	1.00
Lanes:	0.00	0.00	0.00	0.06	0.00	0.94	0.95	0.05	0.00	0.00	0.44	0.56
Final Sat.:	0	0	0	54	0	808	807	42	0	0	404	520
Capacity Analysis Module:												
Vol/Sat:	xxxx	xxxx	xxxx	0.04	xxxx	0.04	0.26	0.26	xxxx	xxxx	0.07	0.07
Crit Moves:				****			****				****	
Delay/Veh:	0.0	0.0	0.0	7.1	0.0	7.1	8.7	8.7	0.0	0.0	7.1	7.1
Delay Adj:	1.00	1.00	1.00	1.00	1.00	1.00	1.00	1.00	1.00	1.00	1.00	1.00
AdjDel/Veh:	0.0	0.0	0.0	7.1	0.0	7.1	8.7	8.7	0.0	0.0	7.1	7.1
LOS by Move:	*	*	*	A	*	A	A	A	*	*	A	A
ApproachDel:	xxxxxx			7.1			8.7			7.1		
Delay Adj:	xxxxx			1.00			1.00			1.00		
ApprAdjDel:	xxxxxx			7.1			8.7			7.1		
LOS by Appr:	*			A			A			A		
AllWayAvgQ:	0.0	0.0	0.0	0.0	0.0	0.0	0.3	0.3	0.3	0.1	0.1	0.1

Overlook Parkway Extension
Future Alt 4
AM Peak Hour

Note: Queue reported is the number of cars per lane.

Overlook Parkway Extension
Future Alt 4
AM Peak Hour

Level Of Service Computation Report
2000 HCM Unsignalized Method (Future Volume Alternative)

Intersection #28 Orozco Dr/Overlook Pkwy

Average Delay (sec/veh): 1.8 Worst Case Level Of Service: F[58.5]

Street Name:	Orozco Dr									Overlook Pkwy							
Approach:	North Bound				South Bound				East Bound				West Bound			
Movement:	L	-	T	- R	L	-	T	- R	L	-	T	- R	L	-	T	- R
Control:	Stop Sign				Stop Sign				Uncontrolled				Uncontrolled			
Rights:	Include				Include				Include				Include			
Lanes:	0	0	1!	0 0	0	0	1!	0 0	1	0	1	1 0	1	0	1	1 0
Volume Module:																
Base Vol:	7	4	3		37	2	2		28	639	4		3	891	149	
Growth Adj:	1.00	1.00	1.00		1.00	1.00	1.00		1.00	1.00	1.00		1.00	1.00	1.00	
Initial Bse:	7	4	3		37	2	2		28	639	4		3	891	149	
Added Vol:	0	0	0		0	0	0		0	0	0		0	0	0	
PasserByVol:	0	0	0		0	0	0		0	0	0		0	0	0	
Initial Fut:	7	4	3		37	2	2		28	639	4		3	891	149	
User Adj:	1.00	1.00	1.00		1.00	1.00	1.00		1.00	1.00	1.00		1.00	1.00	1.00	
PHF Adj:	1.00	1.00	1.00		1.00	1.00	1.00		1.00	1.00	1.00		1.00	1.00	1.00	
PHF Volume:	7	4	3		37	2	2		28	639	4		3	891	149	
Reduct Vol:	0	0	0		0	0	0		0	0	0		0	0	0	
FinalVolume:	7	4	3		37	2	2		28	639	4		3	891	149	
Critical Gap Module:																
Critical Gp:	7.5	6.5	6.9		7.5	6.5	6.9		4.1	xxxx	xxxxx		4.1	xxxx	xxxxx	
FollowUpTim:	3.5	4.0	3.3		3.5	4.0	3.3		2.2	xxxx	xxxxx		2.2	xxxx	xxxxx	
Capacity Module:																
Cnflict Vol:	1150	1743	322		1349	1671	520		1040	xxxx	xxxxx		643	xxxx	xxxxx	
Potent Cap.:	156	88	680		111	97	506		676	xxxx	xxxxx		951	xxxx	xxxxx	
Move Cap.:	147	84	680		103	93	506		676	xxxx	xxxxx		951	xxxx	xxxxx	
Volume/Cap:	0.05	0.05	0.00		0.36	0.02	0.00		0.04	xxxx	xxxx		0.00	xxxx	xxxx	
Level Of Service Module:																
2Way95thQ:	xxxx	xxxx	xxxxx		xxxx	xxxx	xxxxx		0.1	xxxx	xxxxx		0.0	xxxx	xxxxx	
Control Del:	xxxxx	xxxx	xxxxx		xxxxx	xxxx	xxxxx		10.6	xxxx	xxxxx		8.8	xxxx	xxxxx	
LOS by Move:	*	*	*		*	*	*		B	*	*		A	*	*	
Movement:	LT -	LTR -	RT		LT -	LTR -	RT		LT -	LTR -	RT		LT -	LTR -	RT	
Shared Cap.:	xxxx	140	xxxxx		xxxx	107	xxxxx		xxxx	xxxx	xxxxx		xxxx	xxxx	xxxxx	
SharedQueue:	xxxxx	0.3	xxxxx		xxxxx	1.6	xxxxx		xxxxx	xxxx	xxxxx		xxxxx	xxxx	xxxxx	
Shrd ConDel:	xxxxx	33.5	xxxxx		xxxxx	58.5	xxxxx		xxxxx	xxxx	xxxxx		xxxxx	xxxx	xxxxx	
Shared LOS:	*	D	*		*	F	*		*	*	*		*	*	*	
ApproachDel:	33.5				58.5				xxxxxx				xxxxxx			
ApproachLOS:	D				F				*				*			

Note: Queue reported is the number of cars per lane.

Overlook Parkway Extension
Future Alt 4
AM Peak Hour

Level Of Service Computation Report
2000 HCM 4-Way Stop Method (Future Volume Alternative)

Intersection #51 Madison St/Victoria Ave (North)

Cycle (sec): 100 Critical Vol./Cap.(X): 1.321
Loss Time (sec): 0 (Y+R=4.0 sec) Average Delay (sec/veh): 109.6
Optimal Cycle: 0 Level Of Service: F

Street Name:	Madison St							Victoria Ave (North)					
Approach:	North Bound			South Bound				East Bound			West Bound		
Movement:	L	- T	- R	L	- T	- R		L	- T	- R	L	- T	- R
Control:	Stop Sign			Stop Sign				Stop Sign			Stop Sign		
Rights:	Include			Include				Include			Include		
Min. Green:	7	7	7	7	7	7		7	7	7	7	7	7
Lanes:	0 1	1 0	0	0 0	1 1	0		0 0	0 0	0	0 1	0 0	1
Volume Module:													
Base Vol:	269	1112	0	0	877	34		0	0	0	26	135	54
Growth Adj:	1.00	1.00	1.00	1.00	1.00	1.00		1.00	1.00	1.00	1.00	1.00	1.00
Initial Bse:	269	1112	0	0	877	34		0	0	0	26	135	54
Added Vol:	0	0	0	0	0	0		0	0	0	0	0	0
PasserByVol:	0	0	0	0	0	0		0	0	0	0	0	0
Initial Fut:	269	1112	0	0	877	34		0	0	0	26	135	54
User Adj:	1.00	1.00	1.00	1.00	1.00	1.00		1.00	1.00	1.00	1.00	1.00	1.00
PHF Adj:	1.00	1.00	1.00	1.00	1.00	1.00		1.00	1.00	1.00	1.00	1.00	1.00
PHF Volume:	269	1112	0	0	877	34		0	0	0	26	135	54
Reduct Vol:	0	0	0	0	0	0		0	0	0	0	0	0
Reduced Vol:	269	1112	0	0	877	34		0	0	0	26	135	54
PCE Adj:	1.00	1.00	1.00	1.00	1.00	1.00		1.00	1.00	1.00	1.00	1.00	1.00
MLF Adj:	1.00	1.00	1.00	1.00	1.00	1.00		1.00	1.00	1.00	1.00	1.00	1.00
FinalVolume:	269	1112	0	0	877	34		0	0	0	26	135	54
Saturation Flow Module:													
Adjustment:	1.00	1.00	1.00	1.00	1.00	1.00		1.00	1.00	1.00	1.00	1.00	1.00
Lanes:	0.39	1.61	0.00	0.00	1.93	0.07		0.00	0.00	0.00	0.16	0.84	1.00
Final Sat.:	204	857	0	0	1006	39		0	0	0	66	344	447
Capacity Analysis Module:													
Vol/Sat:	1.32	1.30	xxxx	xxxx	0.87	0.87		xxxx	xxxx	xxxx	0.39	0.39	0.12
Crit Moves:	****				****						****		
Delay/Veh:	178.3	168	0.0	0.0	39.8	39.2		0.0	0.0	0.0	16.3	16.3	11.5
Delay Adj:	1.00	1.00	1.00	1.00	1.00	1.00		1.00	1.00	1.00	1.00	1.00	1.00
AdjDel/Veh:	178.3	168	0.0	0.0	39.8	39.2		0.0	0.0	0.0	16.3	16.3	11.5
LOS by Move:	F	F	*	*	E	E		*	*	*	C	C	B
ApproachDel:	170.3				39.8			xxxxxx			15.1		
Delay Adj:	1.00				1.00			xxxxx			1.00		
ApprAdjDel:	170.3				39.8			xxxxxx			15.1		
LOS by Appr:	F				E			*			C		
AllWayAvgQ:	24.5	22.9	0.0	0.0	4.5	4.3		0.0	0.0	0.0	0.6	0.6	0.1

Overlook Parkway Extension
Future Alt 4
AM Peak Hour

Note: Queue reported is the number of cars per lane.

Overlook Parkway Extension
Future Alt 4
AM Peak Hour

Level Of Service Computation Report
2000 HCM 4-Way Stop Method (Future Volume Alternative)

Intersection #52 Madison St/Victoria Ave (South)

Cycle (sec): 100 Critical Vol./Cap.(X): 1.332
Loss Time (sec): 0 (Y+R=4.0 sec) Average Delay (sec/veh): 113.2
Optimal Cycle: 0 Level Of Service: F

Street Name:	Madison St							Victoria Ave (South)					
Approach:	North Bound			South Bound				East Bound			West Bound		
Movement:	L	- T	- R	L	- T	- R		L	- T	- R	L	- T	- R
Control:	Stop Sign			Stop Sign				Stop Sign			Stop Sign		
Rights:	Include			Include				Include			Include		
Min. Green:	7	7	7	7	7	7		7	7	7	7	7	7
Lanes:	0 0	1 1	0	0 1	1 0	0		0 0	1! 0	0	0 0	0 0	0
Volume Module:													
Base Vol:	0	1294	37	17	886	0		87	114	222	0	0	0
Growth Adj:	1.00	1.00	1.00	1.00	1.00	1.00		1.00	1.00	1.00	1.00	1.00	1.00
Initial Bse:	0	1294	37	17	886	0		87	114	222	0	0	0
Added Vol:	0	0	0	0	0	0		0	0	0	0	0	0
PasserByVol:	0	0	0	0	0	0		0	0	0	0	0	0
Initial Fut:	0	1294	37	17	886	0		87	114	222	0	0	0
User Adj:	1.00	1.00	1.00	1.00	1.00	1.00		1.00	1.00	1.00	1.00	1.00	1.00
PHF Adj:	1.00	1.00	1.00	1.00	1.00	1.00		1.00	1.00	1.00	1.00	1.00	1.00
PHF Volume:	0	1294	37	17	886	0		87	114	222	0	0	0
Reduct Vol:	0	0	0	0	0	0		0	0	0	0	0	0
Reduced Vol:	0	1294	37	17	886	0		87	114	222	0	0	0
PCE Adj:	1.00	1.00	1.00	1.00	1.00	1.00		1.00	1.00	1.00	1.00	1.00	1.00
MLF Adj:	1.00	1.00	1.00	1.00	1.00	1.00		1.00	1.00	1.00	1.00	1.00	1.00
FinalVolume:	0	1294	37	17	886	0		87	114	222	0	0	0
Saturation Flow Module:													
Adjustment:	1.00	1.00	1.00	1.00	1.00	1.00		1.00	1.00	1.00	1.00	1.00	1.00
Lanes:	0.00	1.94	0.06	0.04	1.96	0.00		0.21	0.27	0.52	0.00	0.00	0.00
Final Sat.:	0	972	28	19	967	0		114	150	292	0	0	0
Capacity Analysis Module:													
Vol/Sat:	xxxx	1.33	1.33	0.92	0.92	xxxx		0.76	0.76	0.76	xxxx	xxxx	xxxx
Crit Moves:		****		****				****					
Delay/Veh:	0.0	184	182.4	49.5	49.3	0.0		27.2	27.2	27.2	0.0	0.0	0.0
Delay Adj:	1.00	1.00	1.00	1.00	1.00	1.00		1.00	1.00	1.00	1.00	1.00	1.00
AdjDel/Veh:	0.0	184	182.4	49.5	49.3	0.0		27.2	27.2	27.2	0.0	0.0	0.0
LOS by Move:	*	F	F	E	E	*		D	D	D	*	*	*
ApproachDel:	183.9			49.3				27.2			xxxxxx		
Delay Adj:	1.00			1.00				1.00			xxxxx		
ApprAdjDel:	183.9			49.3				27.2			xxxxxx		
LOS by Appr:	F			E				D			*		
AllWayAvgQ:	0.0	24.3	24.0	5.4	5.3	0.0		2.7	2.7	2.7	0.0	0.0	0.0

Overlook Parkway Extension
Future Alt 4
AM Peak Hour

Note: Queue reported is the number of cars per lane.

Overlook Parkway Extension
Future Alt 4
AM Peak Hour

Level Of Service Computation Report
2000 HCM 4-Way Stop Method (Future Volume Alternative)

Intersection #81 Washington St/Victoria Ave (North)

Cycle (sec): 100 Critical Vol./Cap.(X): 0.687
Loss Time (sec): 0 (Y+R=4.0 sec) Average Delay (sec/veh): 17.5
Optimal Cycle: 0 Level Of Service: C

Street Name:	Washington St							Victoria Ave (North)					
Approach:	North Bound			South Bound				East Bound			West Bound		
Movement:	L	- T	- R	L	- T	- R		L	- T	- R	L	- T	- R
Control:	Stop Sign			Stop Sign				Stop Sign			Stop Sign		
Rights:	Include			Include				Include			Include		
Min. Green:	7	7	7	7	7	7		7	7	7	7	7	7
Lanes:	0 1	1 0	0	0 0	0 1	0		0 0	0 0	0	1 0	0 1	0
Volume Module:													
Base Vol:	76	739	0	0	259	10		0	0	0	142	126	64
Growth Adj:	1.00	1.00	1.00	1.00	1.00	1.00		1.00	1.00	1.00	1.00	1.00	1.00
Initial Bse:	76	739	0	0	259	10		0	0	0	142	126	64
Added Vol:	0	0	0	0	0	0		0	0	0	0	0	0
PasserByVol:	0	0	0	0	0	0		0	0	0	0	0	0
Initial Fut:	76	739	0	0	259	10		0	0	0	142	126	64
User Adj:	1.00	1.00	1.00	1.00	1.00	1.00		1.00	1.00	1.00	1.00	1.00	1.00
PHF Adj:	1.00	1.00	1.00	1.00	1.00	1.00		1.00	1.00	1.00	1.00	1.00	1.00
PHF Volume:	76	739	0	0	259	10		0	0	0	142	126	64
Reduct Vol:	0	0	0	0	0	0		0	0	0	0	0	0
Reduced Vol:	76	739	0	0	259	10		0	0	0	142	126	64
PCE Adj:	1.00	1.00	1.00	1.00	1.00	1.00		1.00	1.00	1.00	1.00	1.00	1.00
MLF Adj:	1.00	1.00	1.00	1.00	1.00	1.00		1.00	1.00	1.00	1.00	1.00	1.00
FinalVolume:	76	739	0	0	259	10		0	0	0	142	126	64
Saturation Flow Module:													
Adjustment:	1.00	1.00	1.00	1.00	1.00	1.00		1.00	1.00	1.00	1.00	1.00	1.00
Lanes:	0.19	1.81	0.00	0.00	0.96	0.04		0.00	0.00	0.00	1.00	0.66	0.34
Final Sat.:	111	1085	0	0	540	21		0	0	0	473	346	176
Capacity Analysis Module:													
Vol/Sat:	0.69	0.68	xxxx	xxxx	0.48	0.48		xxxx	xxxx	xxxx	0.30	0.36	0.36
Crit Moves:	****				****								****
Delay/Veh:	20.7	20.2	0.0	0.0	14.9	14.9		0.0	0.0	0.0	13.1	12.9	12.9
Delay Adj:	1.00	1.00	1.00	1.00	1.00	1.00		1.00	1.00	1.00	1.00	1.00	1.00
AdjDel/Veh:	20.7	20.2	0.0	0.0	14.9	14.9		0.0	0.0	0.0	13.1	12.9	12.9
LOS by Move:	C	C	*	*	B	B		*	*	*	B	B	B
ApproachDel:	20.3				14.9			xxxxxx			13.0		
Delay Adj:	1.00				1.00			xxxxx			1.00		
ApprAdjDel:	20.3				14.9			xxxxxx			13.0		
LOS by Appr:	C				B			*			B		
AllWayAvgQ:	2.0	1.9	0.0	0.9	0.9	0.9		0.0	0.0	0.0	0.4	0.5	0.5

Overlook Parkway Extension
Future Alt 4
AM Peak Hour

Note: Queue reported is the number of cars per lane.

Overlook Parkway Extension
Future Alt 4
AM Peak Hour

Level Of Service Computation Report
2000 HCM 4-Way Stop Method (Future Volume Alternative)

Intersection #82 Washington St/Victoria Ave (South)

Cycle (sec): 100 Critical Vol./Cap.(X): 0.775
Loss Time (sec): 0 (Y+R=4.0 sec) Average Delay (sec/veh): 18.1
Optimal Cycle: 0 Level Of Service: C

Street Name:	Washington St						Victoria Ave (South)					
Approach:	North Bound			South Bound			East Bound			West Bound		
Movement:	L -	T -	R	L -	T -	R	L -	T -	R	L -	T -	R
Control:	Stop Sign			Stop Sign			Stop Sign			Stop Sign		
Rights:	Include			Include			Include			Include		
Min. Green:	7	7	7	7	7	7	7	7	7	7	7	7
Lanes:	0 0	2 0	1	0 1	0 0	0	0 1	0 0	1	0 0	0 0	0
Volume Module:												
Base Vol:	0	809	591	54	347	0	6	107	17	0	0	0
Growth Adj:	1.00	1.00	1.00	1.00	1.00	1.00	1.00	1.00	1.00	1.00	1.00	1.00
Initial Bse:	0	809	591	54	347	0	6	107	17	0	0	0
Added Vol:	0	0	0	0	0	0	0	0	0	0	0	0
PasserByVol:	0	0	0	0	0	0	0	0	0	0	0	0
Initial Fut:	0	809	591	54	347	0	6	107	17	0	0	0
User Adj:	1.00	1.00	1.00	1.00	1.00	1.00	1.00	1.00	1.00	1.00	1.00	1.00
PHF Adj:	1.00	1.00	1.00	1.00	1.00	1.00	1.00	1.00	1.00	1.00	1.00	1.00
PHF Volume:	0	809	591	54	347	0	6	107	17	0	0	0
Reduct Vol:	0	0	0	0	0	0	0	0	0	0	0	0
Reduced Vol:	0	809	591	54	347	0	6	107	17	0	0	0
PCE Adj:	1.00	1.00	1.00	1.00	1.00	1.00	1.00	1.00	1.00	1.00	1.00	1.00
MLF Adj:	1.00	1.00	1.00	1.00	1.00	1.00	1.00	1.00	1.00	1.00	1.00	1.00
FinalVolume:	0	809	591	54	347	0	6	107	17	0	0	0
Saturation Flow Module:												
Adjustment:	1.00	1.00	1.00	1.00	1.00	1.00	1.00	1.00	1.00	1.00	1.00	1.00
Lanes:	0.00	2.00	1.00	0.13	0.87	0.00	0.05	0.95	1.00	0.00	0.00	0.00
Final Sat.:	0	1326	763	82	529	0	23	419	484	0	0	0
Capacity Analysis Module:												
Vol/Sat:	xxxx	0.61	0.77	0.66	0.66	xxxx	0.26	0.26	0.04	xxxx	xxxx	xxxx
Crit Moves:			****		****		****					
Delay/Veh:	0.0	16.1	21.4	19.1	19.1	0.0	12.4	12.4	9.7	0.0	0.0	0.0
Delay Adj:	1.00	1.00	1.00	1.00	1.00	1.00	1.00	1.00	1.00	1.00	1.00	1.00
AdjDel/Veh:	0.0	16.1	21.4	19.1	19.1	0.0	12.4	12.4	9.7	0.0	0.0	0.0
LOS by Move:	*	C	C	C	C	*	B	B	A	*	*	*
ApproachDel:	18.3			19.1			12.1			xxxxxx		
Delay Adj:	1.00			1.00			1.00			xxxxx		
ApprAdjDel:	18.3			19.1			12.1			xxxxxx		
LOS by Appr:	C			C			B			*		
AllWayAvgQ:	0.0	1.5	3.0	1.7	1.7	1.7	0.3	0.3	0.0	0.0	0.0	0.0

Overlook Parkway Extension
Future Alt 4
AM Peak Hour

Note: Queue reported is the number of cars per lane.

Overlook Parkway Extension
Future Alt 4
AM Peak Hour

Level Of Service Computation Report
2000 HCM 4-Way Stop Method (Future Volume Alternative)

Intersection #221 Mary St/Victoria Ave (North)

Cycle (sec): 100 Critical Vol./Cap.(X): 1.177
Loss Time (sec): 0 (Y+R=4.0 sec) Average Delay (sec/veh): 71.2
Optimal Cycle: 0 Level Of Service: F

Street Name:	Mary St						Victoria Ave (North)					
Approach:	North Bound			South Bound			East Bound			West Bound		
Movement:	L	T	R	L	T	R	L	T	R	L	T	R
Control:	Stop Sign			Stop Sign			Stop Sign			Stop Sign		
Rights:	Include			Include			Include			Include		
Min. Green:	7	7	7	7	7	7	7	7	7	7	7	7
Lanes:	0 1	0 0	0	0 0	1 0	1	0 0	0 0	0	0 0	1! 0	0
Volume Module:												
Base Vol:	22	737	0	0	140	72	0	0	0	41	204	165
Growth Adj:	1.00	1.00	1.00	1.00	1.00	1.00	1.00	1.00	1.00	1.00	1.00	1.00
Initial Bse:	22	737	0	0	140	72	0	0	0	41	204	165
Added Vol:	0	0	0	0	0	0	0	0	0	0	0	0
PasserByVol:	0	0	0	0	0	0	0	0	0	0	0	0
Initial Fut:	22	737	0	0	140	72	0	0	0	41	204	165
User Adj:	1.00	1.00	1.00	1.00	1.00	1.00	1.00	1.00	1.00	1.00	1.00	1.00
PHF Adj:	1.00	1.00	1.00	1.00	1.00	1.00	1.00	1.00	1.00	1.00	1.00	1.00
PHF Volume:	22	737	0	0	140	72	0	0	0	41	204	165
Reduct Vol:	0	0	0	0	0	0	0	0	0	0	0	0
Reduced Vol:	22	737	0	0	140	72	0	0	0	41	204	165
PCE Adj:	1.00	1.00	1.00	1.00	1.00	1.00	1.00	1.00	1.00	1.00	1.00	1.00
MLF Adj:	1.00	1.00	1.00	1.00	1.00	1.00	1.00	1.00	1.00	1.00	1.00	1.00
FinalVolume:	22	737	0	0	140	72	0	0	0	41	204	165
Saturation Flow Module:												
Adjustment:	1.00	1.00	1.00	1.00	1.00	1.00	1.00	1.00	1.00	1.00	1.00	1.00
Lanes:	0.03	0.97	0.00	0.00	1.00	1.00	0.00	0.00	0.00	0.10	0.50	0.40
Final Sat.:	19	626	0	0	528	589	0	0	0	61	304	246
Capacity Analysis Module:												
Vol/Sat:	1.18	1.18	xxxx	xxxx	0.27	0.12	xxxx	xxxx	xxxx	0.67	0.67	0.67
Crit Moves:		****			****						****	
Delay/Veh:	115.8	116	0.0	0.0	11.6	9.4	0.0	0.0	0.0	19.7	19.7	19.7
Delay Adj:	1.00	1.00	1.00	1.00	1.00	1.00	1.00	1.00	1.00	1.00	1.00	1.00
AdjDel/Veh:	115.8	116	0.0	0.0	11.6	9.4	0.0	0.0	0.0	19.7	19.7	19.7
LOS by Move:	F	F	*	*	B	A	*	*	*	C	C	C
ApproachDel:	115.8				10.9		xxxxxx			19.7		
Delay Adj:	1.00				1.00		xxxxx			1.00		
ApprAdjDel:	115.8				10.9		xxxxxx			19.7		
LOS by Appr:	F				B		*			C		
AllWayAvgQ:	19.2	19.2	19.2	0.0	0.3	0.1	0.0	0.0	0.0	1.8	1.8	1.8

Overlook Parkway Extension
Future Alt 4
AM Peak Hour

Note: Queue reported is the number of cars per lane.

Overlook Parkway Extension
Future Alt 4
AM Peak Hour

Level Of Service Computation Report
2000 HCM 4-Way Stop Method (Future Volume Alternative)

Intersection #222 Mary St/Victoria Ave (South)

Cycle (sec): 100 Critical Vol./Cap.(X): 0.883
Loss Time (sec): 0 (Y+R=4.0 sec) Average Delay (sec/veh): 25.0
Optimal Cycle: 0 Level Of Service: C

Street Name:	Mary St						Victoria Ave (South)					
Approach:	North Bound			South Bound			East Bound			West Bound		
Movement:	L -	T -	R	L -	T -	R	L -	T -	R	L -	T -	R
Control:	Stop Sign			Stop Sign			Stop Sign			Stop Sign		
Rights:	Include			Include			Include			Include		
Min. Green:	7	7	7	7	7	7	7	7	7	7	7	7
Lanes:	0 0	0 1	0	0 1	0 0	0	1 0	0 1	0	0 0	0 0	0
Volume Module:												
Base Vol:	0	284	146	68	113	0	475	267	18	0	0	0
Growth Adj:	1.00	1.00	1.00	1.00	1.00	1.00	1.00	1.00	1.00	1.00	1.00	1.00
Initial Bse:	0	284	146	68	113	0	475	267	18	0	0	0
Added Vol:	0	0	0	0	0	0	0	0	0	0	0	0
PasserByVol:	0	0	0	0	0	0	0	0	0	0	0	0
Initial Fut:	0	284	146	68	113	0	475	267	18	0	0	0
User Adj:	1.00	1.00	1.00	1.00	1.00	1.00	1.00	1.00	1.00	1.00	1.00	1.00
PHF Adj:	1.00	1.00	1.00	1.00	1.00	1.00	1.00	1.00	1.00	1.00	1.00	1.00
PHF Volume:	0	284	146	68	113	0	475	267	18	0	0	0
Reduct Vol:	0	0	0	0	0	0	0	0	0	0	0	0
Reduced Vol:	0	284	146	68	113	0	475	267	18	0	0	0
PCE Adj:	1.00	1.00	1.00	1.00	1.00	1.00	1.00	1.00	1.00	1.00	1.00	1.00
MLF Adj:	1.00	1.00	1.00	1.00	1.00	1.00	1.00	1.00	1.00	1.00	1.00	1.00
FinalVolume:	0	284	146	68	113	0	475	267	18	0	0	0
Saturation Flow Module:												
Adjustment:	1.00	1.00	1.00	1.00	1.00	1.00	1.00	1.00	1.00	1.00	1.00	1.00
Lanes:	0.00	0.66	0.34	0.38	0.62	0.00	1.00	0.94	0.06	0.00	0.00	0.00
Final Sat.:	0	405	208	202	335	0	538	549	37	0	0	0
Capacity Analysis Module:												
Vol/Sat:	xxxx	0.70	0.70	0.34	0.34	xxxx	0.88	0.49	0.49	xxxx	xxxx	xxxx
Crit Moves:			****	****			****					
Delay/Veh:	0.0	20.7	20.7	12.5	12.5	0.0	40.0	14.4	14.4	0.0	0.0	0.0
Delay Adj:	1.00	1.00	1.00	1.00	1.00	1.00	1.00	1.00	1.00	1.00	1.00	1.00
AdjDel/Veh:	0.0	20.7	20.7	12.5	12.5	0.0	40.0	14.4	14.4	0.0	0.0	0.0
LOS by Move:	*	C	C	B	B	*	E	B	B	*	*	*
ApproachDel:		20.7			12.5			30.4			xxxxxx	
Delay Adj:		1.00			1.00			1.00			xxxxx	
ApprAdjDel:		20.7			12.5			30.4			xxxxxx	
LOS by Appr:		C			B			D			*	
AllWayAvgQ:	2.0	2.0	2.0	0.5	0.5	0.5	4.6	0.9	0.9	0.0	0.0	0.0

Overlook Parkway Extension
Future Alt 4
AM Peak Hour

Note: Queue reported is the number of cars per lane.

Overlook Parkway Extension
Future Alt 4
PM Peak Hour

Scenario Report

Scenario:	Future Alt A PM
Command:	Future Alt A PM
Volume:	Future Alt A PM
Geometry:	Future
Impact Fee:	Default Impact Fee
Trip Generation:	none
Trip Distribution:	none
Paths:	Default Path
Routes:	Default Route
Configuration:	Future Alt A PM

Traffix 7.9.0215 (c) 2008 Dowling Assoc. Licensed to MMA, LONG BEACH, CA

Overlook Parkway Extension
Future Alt 4
PM Peak Hour

Impact Analysis Report
Level Of Service

Intersection	Base LOS	Base Del/ Veh	Base V/ C	Future LOS	Future Del/ Veh	Future V/ C	Change in
# 1 Madison St/SR-91 WB Ramps	D	36.2	0.869	D	36.2	0.869	+ 0.000 D/V
# 2 Madison St/SR-91 EB Ramps	E	70.6	1.109	E	70.6	1.109	+ 0.000 D/V
# 3 Madison St/Indiana Ave	F	161.3	1.328	F	161.3	1.328	+ 0.000 D/V
# 4 Madison St/Lincoln Ave	E	63.3	0.986	E	63.3	0.986	+ 0.000 D/V
# 6 Washington St/Indiana Ave	C	29.8	0.852	C	29.8	0.852	+ 0.000 D/V
# 7 Washington St/Lincoln Ave	F	87.9	1.170	F	87.9	1.170	+ 0.000 V/C
# 9 Washington St/Overlook Pkwy	F	92.6	1.192	F	92.6	1.192	+ 0.000 D/V
# 10 Riverside Ave-SR-91 WB/Arlingt	E	62.4	1.070	E	62.4	1.070	+ 0.000 D/V
# 11 Indiana Ave-SR-91 EB/Arlington	C	32.7	0.952	C	32.7	0.952	+ 0.000 D/V
# 12 Victoria Ave/Arlington Ave	E	61.5	1.055	E	61.5	1.055	+ 0.000 D/V
# 13 Alessandro Blvd/Arlington Ave	F	91.2	1.163	F	91.2	1.163	+ 0.000 D/V
# 14 Alessandro Blvd/Overlook Pkwy	F	358.0	2.055	F	358.0	2.055	+ 0.000 D/V
# 15 Alessandro Blvd/Trautwein Rd	D	39.9	0.982	D	39.9	0.982	+ 0.000 D/V
# 16 Crystal View Ter/Overlook Pkwy	F	79.5	1.110	F	79.5	1.110	+ 0.000 V/C
# 17 Kingdom Dr/Overlook Pkwy	F	OVRFL	0.000	F	OVRFL	0.000	+ 0.000 D/V
# 18 Kingdom Dr/Green Orchard Pl	A	9.2	0.000	A	9.2	0.000	+ 0.000 D/V
# 19 Trautwein Rd/John F. Kennedy D	C	32.4	0.914	C	32.4	0.914	+ 0.000 D/V
# 20 Washington St/Bradley St	D	47.8	0.988	D	47.8	0.988	+ 0.000 D/V
# 21 Alessandro Blvd/Via Vista Dr	D	35.3	0.936	D	35.3	0.936	+ 0.000 D/V
# 23 Mary St/Hawarden Dr	B	13.4	0.684	B	13.4	0.684	+ 0.000 V/C
# 24 Hawarden Dr/Overlook Pkwy	F	80.3	1.101	F	80.3	1.101	+ 0.000 V/C
# 25 Crystal View Ter/Berry Rd	B	11.0	0.465	B	11.0	0.465	+ 0.000 V/C
# 26 Corinthian Wy/Berry Rd	B	11.3	0.521	B	11.3	0.521	+ 0.000 V/C

Traffix 7.9.0215 (c) 2008 Dowling Assoc. Licensed to MMA, LONG BEACH, CA

Overlook Parkway Extension
Future Alt 4
PM Peak Hour

Intersection	Base LOS	Base Del/Veh	Base V/C	Future LOS	Future Del/Veh	Future V/C	Change in V/C
# 28 Orozco Dr/Overlook Pkwy	F	OVRFL	0.000	F	OVRFL	0.000	+ 0.000
# 51 Madison St/Victoria Ave (North	F	178.5	1.412	F	178.5	1.412	+ 0.000
# 52 Madison St/Victoria Ave (South	F	223.1	1.587	F	223.1	1.587	+ 0.000
# 81 Washington St/Victoria Ave (No	F	59.3	1.079	F	59.3	1.079	+ 0.000
# 82 Washington St/Victoria Ave (So	F	169.5	1.719	F	169.5	1.719	+ 0.000
#221 Mary St/Victoria Ave (North)	F	54.6	1.138	F	54.6	1.138	+ 0.000
#222 Mary St/Victoria Ave (South)	F	70.9	1.202	F	70.9	1.202	+ 0.000

Overlook Parkway Extension
Future Alt 4
PM Peak Hour

Level Of Service Computation Report
2000 HCM Operations Method (Future Volume Alternative)

Intersection #1 Madison St/SR-91 WB Ramps

Cycle (sec): 100 Critical Vol./Cap.(X): 0.869
Loss Time (sec): 12 (Y+R=4.0 sec) Average Delay (sec/veh): 36.2
Optimal Cycle: 97 Level Of Service: D

Street Name:	Madison St									SR-91 WB Ramps								
Approach:	North Bound				South Bound				East Bound				West Bound					
Movement:	L	-	T	-	R	L	-	T	-	R	L	-	T	-	R	L	-	T	-	R
Control:	Protected					Protected					Split Phase					Split Phase				
Rights:	Include					Include					Include					Include				
Min. Green:	7	7	7			7	7	7			7	7	7			7	7	7		
Lanes:	1	0	2	0	0	0	0	3	0	1	0	0	0	0	0	0	1	0	0	1
Volume Module:																				
Base Vol:	510	1020			0	0	1095			165	0		0		0	456		1		142
Growth Adj:	1.00	1.00	1.00		1.00	1.00	1.00	1.00		1.00	1.00	1.00	1.00		1.00	1.00	1.00	1.00		1.00
Initial Bse:	510	1020			0	0	1095			165	0		0		0	456		1		142
Added Vol:	0	0			0	0	0			0	0		0		0	0		0		0
PasserByVol:	0	0			0	0	0			0	0		0		0	0		0		0
Initial Fut:	510	1020			0	0	1095			165	0		0		0	456		1		142
User Adj:	1.00	1.00	1.00		1.00	1.00	1.00	1.00		1.00	1.00	1.00	1.00		1.00	1.00	1.00	1.00		1.00
PHF Adj:	1.00	1.00	1.00		1.00	1.00	1.00	1.00		1.00	1.00	1.00	1.00		1.00	1.00	1.00	1.00		1.00
PHF Volume:	510	1020			0	0	1095			165	0		0		0	456		1		142
Reduct Vol:	0	0			0	0	0			0	0		0		0	0		0		0
Reduced Vol:	510	1020			0	0	1095			165	0		0		0	456		1		142
PCE Adj:	1.00	1.00	1.00		1.00	1.00	1.00	1.00		1.00	1.00	1.00	1.00		1.00	1.00	1.00	1.00		1.00
MLF Adj:	1.00	1.00	1.00		1.00	1.00	1.00	1.00		1.00	1.00	1.00	1.00		1.00	1.00	1.00	1.00		1.00
FinalVolume:	510	1020			0	0	1095			165	0		0		0	456		1		142
Saturation Flow Module:																				
Sat/Lane:	1900	1900	1900		1900	1900	1900	1900		1900	1900	1900	1900		1900	1900	1900	1900		1900
Adjustment:	0.95	0.95	1.00		1.00	0.91	0.85	1.00		1.00	1.00	1.00	0.89		0.89	0.85				
Lanes:	1.00	2.00	0.00		0.00	3.00	1.00	0.00		0.00	0.00	0.00	0.99		0.01	1.00				
Final Sat.:	1805	3610			0	0	5187	1615			0		0		0	1680		4		1615
Capacity Analysis Module:																				
Vol/Sat:	0.28	0.28	0.00		0.00	0.21	0.10	0.00		0.00	0.00	0.27	0.27		0.09					
Crit Moves:	****					****						****								
Green/Cycle:	0.32	0.46	0.00		0.00	0.24	0.24	0.00		0.00	0.00	0.31	0.31		0.31					
Volume/Cap:	0.87	0.62	0.00		0.00	0.87	0.42	0.00		0.00	0.00	0.87	0.87		0.28					
Delay/Veh:	45.0	21.4	0.0		0.0	43.1	32.7	0.0		0.0	0.0	46.9	46.9		26.2					
User DelAdj:	1.00	1.00	1.00		1.00	1.00	1.00	1.00		1.00	1.00	1.00	1.00		1.00					
AdjDel/Veh:	45.0	21.4	0.0		0.0	43.1	32.7	0.0		0.0	0.0	46.9	46.9		26.2					
LOS by Move:	D	C	A		A	D	C	A		A	A	D	D		C					
HCM2kAvgQ:	18	13	0		0	15	5	0		0	0	16	16		3					

Note: Queue reported is the number of cars per lane.

Overlook Parkway Extension
Future Alt 4
PM Peak Hour

Level Of Service Computation Report
2000 HCM Operations Method (Future Volume Alternative)

Intersection #2 Madison St/SR-91 EB Ramps

Cycle (sec): 100 Critical Vol./Cap.(X): 1.109
Loss Time (sec): 12 (Y+R=4.0 sec) Average Delay (sec/veh): 70.6
Optimal Cycle: 130 Level Of Service: E

Street Name:	Madison St						SR-91 EB Ramps					
Approach:	North Bound			South Bound			East Bound			West Bound		
Movement:	L	T	R	L	T	R	L	T	R	L	T	R
Control:	Protected			Protected			Protected			Protected		
Rights:	Include			Include			Include			Include		
Min. Green:	7	7	7	7	7	7	7	7	7	7	7	7
Lanes:	0 0	3 0	1	1 0	2 0	0	0 1	0 0	1	0 0	0 0	0
Volume Module:												
Base Vol:	0	1239	600	192	1389	0	278	6	804	0	0	0
Growth Adj:	1.00	1.00	1.00	1.00	1.00	1.00	1.00	1.00	1.00	1.00	1.00	1.00
Initial Bse:	0	1239	600	192	1389	0	278	6	804	0	0	0
Added Vol:	0	0	0	0	0	0	0	0	0	0	0	0
PasserByVol:	0	0	0	0	0	0	0	0	0	0	0	0
Initial Fut:	0	1239	600	192	1389	0	278	6	804	0	0	0
User Adj:	1.00	1.00	1.00	1.00	1.00	1.00	1.00	1.00	1.00	1.00	1.00	1.00
PHF Adj:	1.00	1.00	1.00	1.00	1.00	1.00	1.00	1.00	1.00	1.00	1.00	1.00
PHF Volume:	0	1239	600	192	1389	0	278	6	804	0	0	0
Reduct Vol:	0	0	0	0	0	0	0	0	0	0	0	0
Reduced Vol:	0	1239	600	192	1389	0	278	6	804	0	0	0
PCE Adj:	1.00	1.00	1.00	1.00	1.00	1.00	1.00	1.00	1.00	1.00	1.00	1.00
MLF Adj:	1.00	1.00	1.00	1.00	1.00	1.00	1.00	1.00	1.00	1.00	1.00	1.00
FinalVolume:	0	1239	600	192	1389	0	278	6	804	0	0	0
Saturation Flow Module:												
Sat/Lane:	1900	1900	1900	1900	1900	1900	1900	1900	1900	1900	1900	1900
Adjustment:	1.00	0.91	0.85	0.95	0.95	1.00	0.96	0.96	0.85	1.00	1.00	1.00
Lanes:	0.00	3.00	1.00	1.00	2.00	0.00	0.98	0.02	1.00	0.00	0.00	0.00
Final Sat.:	0	5187	1615	1805	3610	0	1789	39	1615	0	0	0
Capacity Analysis Module:												
Vol/Sat:	0.00	0.24	0.37	0.11	0.38	0.00	0.16	0.16	0.50	0.00	0.00	0.00
Crit Moves:			****	****					****			
Green/Cycle:	0.00	0.34	0.34	0.10	0.36	0.00	0.36	0.45	0.45	0.00	0.00	0.00
Volume/Cap:	0.00	0.71	1.11	1.11	1.07	0.00	0.43	0.35	1.11	0.00	0.00	0.00
Delay/Veh:	0.0	30.5	105.2	145.7	76.5	0.0	24.9	18.2	94.9	0.0	0.0	0.0
User DelAdj:	1.00	1.00	1.00	1.00	1.00	1.00	1.00	1.00	1.00	1.00	1.00	1.00
AdjDel/Veh:	0.0	30.5	105.2	145.7	76.5	0.0	24.9	18.2	94.9	0.0	0.0	0.0
LOS by Move:	A	C	F	F	E	A	C	B	F	A	A	A
HCM2kAvgQ:	0	13	30	12	33	0	7	6	38	0	0	0

Note: Queue reported is the number of cars per lane.

Overlook Parkway Extension
Future Alt 4
PM Peak Hour

Level Of Service Computation Report
2000 HCM Operations Method (Future Volume Alternative)

Intersection #3 Madison St/Indiana Ave

Cycle (sec): 100 Critical Vol./Cap.(X): 1.328
Loss Time (sec): 16 (Y+R=4.0 sec) Average Delay (sec/veh): 161.3
Optimal Cycle: 130 Level Of Service: F

Street Name:	Madison St						Indiana Ave					
Approach:	North Bound			South Bound			East Bound			West Bound		
Movement:	L	T	R	L	T	R	L	T	R	L	T	R
Control:	Protected			Protected			Protected			Protected		
Rights:	Include			Include			Include			Include		
Min. Green:	7	7	7	7	7	7	7	7	7	7	7	7
Lanes:	1 0	1	1 0	1 0	1	1 0	1 0	1	1 0	1 0	1	1 0
Volume Module:												
Base Vol:	176	1013	54	465	1389	340	447	624	149	53	453	461
Growth Adj:	1.00	1.00	1.00	1.00	1.00	1.00	1.00	1.00	1.00	1.00	1.00	1.00
Initial Bse:	176	1013	54	465	1389	340	447	624	149	53	453	461
Added Vol:	0	0	0	0	0	0	0	0	0	0	0	0
PasserByVol:	0	0	0	0	0	0	0	0	0	0	0	0
Initial Fut:	176	1013	54	465	1389	340	447	624	149	53	453	461
User Adj:	1.00	1.00	1.00	1.00	1.00	1.00	1.00	1.00	1.00	1.00	1.00	1.00
PHF Adj:	1.00	1.00	1.00	1.00	1.00	1.00	1.00	1.00	1.00	1.00	1.00	1.00
PHF Volume:	176	1013	54	465	1389	340	447	624	149	53	453	461
Reduct Vol:	0	0	0	0	0	0	0	0	0	0	0	0
Reduced Vol:	176	1013	54	465	1389	340	447	624	149	53	453	461
PCE Adj:	1.00	1.00	1.00	1.00	1.00	1.00	1.00	1.00	1.00	1.00	1.00	1.00
MLF Adj:	1.00	1.00	1.00	1.00	1.00	1.00	1.00	1.00	1.00	1.00	1.00	1.00
FinalVolume:	176	1013	54	465	1389	340	447	624	149	53	453	461
Saturation Flow Module:												
Sat/Lane:	1900	1900	1900	1900	1900	1900	1900	1900	1900	1900	1900	1900
Adjustment:	0.95	0.94	0.94	0.95	0.92	0.92	0.95	0.92	0.92	0.95	0.88	0.88
Lanes:	1.00	1.90	0.10	1.00	1.61	0.39	1.00	1.61	0.39	1.00	1.00	1.00
Final Sat.:	1805	3400	181	1805	2813	689	1805	2830	676	1805	1668	1668
Capacity Analysis Module:												
Vol/Sat:	0.10	0.30	0.30	0.26	0.49	0.49	0.25	0.22	0.22	0.03	0.27	0.28
Crit Moves:	****				****		****					****
Green/Cycle:	0.07	0.24	0.24	0.21	0.37	0.37	0.19	0.30	0.30	0.10	0.21	0.21
Volume/Cap:	1.33	1.25	1.25	1.25	1.33	1.33	1.33	0.74	0.74	0.31	1.30	1.33
Delay/Veh:	236.5	159	159.2	171.6	184	184.3	207.3	34.2	34.2	43.2	187	197.0
User DelAdj:	1.00	1.00	1.00	1.00	1.00	1.00	1.00	1.00	1.00	1.00	1.00	1.00
AdjDel/Veh:	236.5	159	159.2	171.6	184	184.3	207.3	34.2	34.2	43.2	187	197.0
LOS by Move:	F	F	F	F	F	F	F	C	C	D	F	F
HCM2kAvgQ:	13	33	33	28	57	57	29	13	13	2	31	32

Note: Queue reported is the number of cars per lane.

Overlook Parkway Extension
Future Alt 4
PM Peak Hour

Level Of Service Computation Report
2000 HCM Operations Method (Future Volume Alternative)

Intersection #4 Madison St/Lincoln Ave

Cycle (sec): 100 Critical Vol./Cap.(X): 0.986
Loss Time (sec): 16 (Y+R=4.0 sec) Average Delay (sec/veh): 63.3
Optimal Cycle: 130 Level Of Service: E

Street Name:	Madison St						Lincoln Ave					
Approach:	North Bound			South Bound			East Bound			West Bound		
Movement:	L - T - R			L - T - R			L - T - R			L - T - R		
Control:	Protected			Protected			Protected			Protected		
Rights:	Include			Include			Include			Include		
Min. Green:	7	7	7	7	7	7	7	7	7	7	7	7
Lanes:	1 0	1 1	0	1 0	1 1	0	1 0	0 1	0	1 0	1 1	0
Volume Module:												
Base Vol:	220	849	21	33	1194	150	190	262	288	24	208	34
Growth Adj:	1.00	1.00	1.00	1.00	1.00	1.00	1.00	1.00	1.00	1.00	1.00	1.00
Initial Bse:	220	849	21	33	1194	150	190	262	288	24	208	34
Added Vol:	0	0	0	0	0	0	0	0	0	0	0	0
PasserByVol:	0	0	0	0	0	0	0	0	0	0	0	0
Initial Fut:	220	849	21	33	1194	150	190	262	288	24	208	34
User Adj:	1.00	1.00	1.00	1.00	1.00	1.00	1.00	1.00	1.00	1.00	1.00	1.00
PHF Adj:	1.00	1.00	1.00	1.00	1.00	1.00	1.00	1.00	1.00	1.00	1.00	1.00
PHF Volume:	220	849	21	33	1194	150	190	262	288	24	208	34
Reduct Vol:	0	0	0	0	0	0	0	0	0	0	0	0
Reduced Vol:	220	849	21	33	1194	150	190	262	288	24	208	34
PCE Adj:	1.00	1.00	1.00	1.00	1.00	1.00	1.00	1.00	1.00	1.00	1.00	1.00
MLF Adj:	1.00	1.00	1.00	1.00	1.00	1.00	1.00	1.00	1.00	1.00	1.00	1.00
FinalVolume:	220	849	21	33	1194	150	190	262	288	24	208	34
Saturation Flow Module:												
Sat/Lane:	1900	1900	1900	1900	1900	1900	1900	1900	1900	1900	1900	1900
Adjustment:	0.95	0.95	0.95	0.95	0.93	0.93	0.95	0.92	0.92	0.95	0.93	0.93
Lanes:	1.00	1.95	0.05	1.00	1.78	0.22	1.00	0.48	0.52	1.00	1.72	0.28
Final Sat.:	1805	3509	87	1805	3153	396	1805	834	916	1805	3038	497
Capacity Analysis Module:												
Vol/Sat:	0.12	0.24	0.24	0.02	0.38	0.38	0.11	0.31	0.31	0.01	0.07	0.07
Crit Moves:	****				****			****		****		
Green/Cycle:	0.12	0.37	0.37	0.11	0.36	0.36	0.22	0.30	0.30	0.07	0.15	0.15
Volume/Cap:	1.06	0.66	0.66	0.17	1.06	1.06	0.48	1.06	1.06	0.19	0.47	0.47
Delay/Veh:	122.9	27.7	27.7	41.1	74.3	74.3	34.9	91.0	91.0	44.6	39.8	39.8
User DelAdj:	1.00	1.00	1.00	1.00	1.00	1.00	1.00	1.00	1.00	1.00	1.00	1.00
AdjDel/Veh:	122.9	27.7	27.7	41.1	74.3	74.3	34.9	91.0	91.0	44.6	39.8	39.8
LOS by Move:	F	C	C	D	E	E	C	F	F	D	D	D
HCM2kAvgQ:	12	12	12	1	32	32	5	26	26	1	4	4

Note: Queue reported is the number of cars per lane.

Overlook Parkway Extension
Future Alt 4
PM Peak Hour

Level Of Service Computation Report
2000 HCM Operations Method (Future Volume Alternative)

Intersection #6 Washington St/Indiana Ave

Cycle (sec): 100 Critical Vol./Cap.(X): 0.852
Loss Time (sec): 12 (Y+R=4.0 sec) Average Delay (sec/veh): 29.8
Optimal Cycle: 91 Level Of Service: C

Street Name:	Washington St						Indiana Ave					
Approach:	North Bound			South Bound			East Bound			West Bound		
Movement:	L - T - R			L - T - R			L - T - R			L - T - R		
Control:	Permitted			Permitted			Protected			Protected		
Rights:	Ovl			Include			Include			Include		
Min. Green:	7	7	7	7	7	7	7	7	7	7	7	7
Lanes:	1 0	0 1	0	1 0	0 1	0	1 0	1 1	0	1 0	1 1	0
Volume Module:												
Base Vol:	182	1	351	19	4	9	2	916	206	382	728	3
Growth Adj:	1.00	1.00	1.00	1.00	1.00	1.00	1.00	1.00	1.00	1.00	1.00	1.00
Initial Bse:	182	1	351	19	4	9	2	916	206	382	728	3
Added Vol:	0	0	0	0	0	0	0	0	0	0	0	0
PasserByVol:	0	0	0	0	0	0	0	0	0	0	0	0
Initial Fut:	182	1	351	19	4	9	2	916	206	382	728	3
User Adj:	1.00	1.00	1.00	1.00	1.00	1.00	1.00	1.00	1.00	1.00	1.00	1.00
PHF Adj:	1.00	1.00	1.00	1.00	1.00	1.00	1.00	1.00	1.00	1.00	1.00	1.00
PHF Volume:	182	1	351	19	4	9	2	916	206	382	728	3
Reduct Vol:	0	0	0	0	0	0	0	0	0	0	0	0
Reduced Vol:	182	1	351	19	4	9	2	916	206	382	728	3
PCE Adj:	1.00	1.00	1.00	1.00	1.00	1.00	1.00	1.00	1.00	1.00	1.00	1.00
MLF Adj:	1.00	1.00	1.00	1.00	1.00	1.00	1.00	1.00	1.00	1.00	1.00	1.00
FinalVolume:	182	1	351	19	4	9	2	916	206	382	728	3
Saturation Flow Module:												
Sat/Lane:	1900	1900	1900	1900	1900	1900	1900	1900	1900	1900	1900	1900
Adjustment:	0.76	0.85	0.85	0.25	0.90	0.90	0.95	0.92	0.92	0.95	0.95	0.95
Lanes:	1.00	0.01	0.99	1.00	0.31	0.69	1.00	1.63	0.37	1.00	1.99	0.01
Final Sat.:	1440	5	1610	467	524	1179	1805	2865	644	1805	3592	15
Capacity Analysis Module:												
Vol/Sat:	0.13	0.22	0.22	0.04	0.01	0.01	0.00	0.32	0.32	0.21	0.20	0.20
Crit Moves:		****						****		****		
Green/Cycle:	0.26	0.26	0.50	0.26	0.26	0.26	0.16	0.38	0.38	0.25	0.46	0.46
Volume/Cap:	0.49	0.85	0.43	0.16	0.03	0.03	0.01	0.85	0.85	0.85	0.44	0.44
Delay/Veh:	32.7	50.9	16.1	29.5	27.9	27.9	35.3	34.2	34.2	50.2	18.2	18.2
User DelAdj:	1.00	1.00	1.00	1.00	1.00	1.00	1.00	1.00	1.00	1.00	1.00	1.00
AdjDel/Veh:	32.7	50.9	16.1	29.5	27.9	27.9	35.3	34.2	34.2	50.2	18.2	18.2
LOS by Move:	C	D	B	C	C	C	D	C	C	D	B	B
HCM2kAvgQ:	5	13	7	1	0	0	0	19	19	14	8	8

Note: Queue reported is the number of cars per lane.

Overlook Parkway Extension
Future Alt 4
PM Peak Hour

Level Of Service Computation Report
2000 HCM 4-Way Stop Method (Future Volume Alternative)

Intersection #7 Washington St/Lincoln Ave

Cycle (sec): 100 Critical Vol./Cap.(X): 1.170
Loss Time (sec): 0 (Y+R=4.0 sec) Average Delay (sec/veh): 87.9
Optimal Cycle: 0 Level Of Service: F

Street Name:	Washington St						Lincoln Ave					
Approach:	North Bound			South Bound			East Bound			West Bound		
Movement:	L -	T -	R	L -	T -	R	L -	T -	R	L -	T -	R
Control:	Stop Sign			Stop Sign			Stop Sign			Stop Sign		
Rights:	Include			Include			Include			Include		
Min. Green:	7	7	7	7	7	7	7	7	7	7	7	7
Lanes:	0 0	1! 0	0	0 0	1! 0	0	0 0	1! 0	0	0 1	0 0	1
Volume Module:												
Base Vol:	66	455	46	81	455	39	10	261	35	34	167	27
Growth Adj:	1.00	1.00	1.00	1.00	1.00	1.00	1.00	1.00	1.00	1.00	1.00	1.00
Initial Bse:	66	455	46	81	455	39	10	261	35	34	167	27
Added Vol:	0	0	0	0	0	0	0	0	0	0	0	0
PasserByVol:	0	0	0	0	0	0	0	0	0	0	0	0
Initial Fut:	66	455	46	81	455	39	10	261	35	34	167	27
User Adj:	1.00	1.00	1.00	1.00	1.00	1.00	1.00	1.00	1.00	1.00	1.00	1.00
PHF Adj:	1.00	1.00	1.00	1.00	1.00	1.00	1.00	1.00	1.00	1.00	1.00	1.00
PHF Volume:	66	455	46	81	455	39	10	261	35	34	167	27
Reduct Vol:	0	0	0	0	0	0	0	0	0	0	0	0
Reduced Vol:	66	455	46	81	455	39	10	261	35	34	167	27
PCE Adj:	1.00	1.00	1.00	1.00	1.00	1.00	1.00	1.00	1.00	1.00	1.00	1.00
MLF Adj:	1.00	1.00	1.00	1.00	1.00	1.00	1.00	1.00	1.00	1.00	1.00	1.00
FinalVolume:	66	455	46	81	455	39	10	261	35	34	167	27
Saturation Flow Module:												
Adjustment:	1.00	1.00	1.00	1.00	1.00	1.00	1.00	1.00	1.00	1.00	1.00	1.00
Lanes:	0.12	0.80	0.08	0.14	0.79	0.07	0.03	0.86	0.11	0.17	0.83	1.00
Final Sat.:	57	395	40	69	389	33	14	377	51	68	335	441
Capacity Analysis Module:												
Vol/Sat:	1.15	1.15	1.15	1.17	1.17	1.17	0.69	0.69	0.69	0.50	0.50	0.06
Crit Moves:	****			****				****			****	
Delay/Veh:	114.7	115	114.7	121.4	121	121.4	26.9	26.9	26.9	19.6	19.6	11.2
Delay Adj:	1.00	1.00	1.00	1.00	1.00	1.00	1.00	1.00	1.00	1.00	1.00	1.00
AdjDel/Veh:	114.7	115	114.7	121.4	121	121.4	26.9	26.9	26.9	19.6	19.6	11.2
LOS by Move:	F	F	F	F	F	F	D	D	D	C	C	B
ApproachDel:	114.7			121.4			26.9			18.6		
Delay Adj:	1.00			1.00			1.00			1.00		
ApprAdjDel:	114.7			121.4			26.9			18.6		
LOS by Appr:	F			F			D			C		
AllWayAvgQ:	14.3	14.3	14.3	15.2	15.2	15.2	1.9	1.9	1.9	0.9	0.9	0.1

Overlook Parkway Extension
Future Alt 4
PM Peak Hour

Note: Queue reported is the number of cars per lane.

Overlook Parkway Extension
Future Alt 4
PM Peak Hour

Level Of Service Computation Report
2000 HCM Operations Method (Future Volume Alternative)

Intersection #9 Washington St/Overlook Pkwy

Cycle (sec): 100 Critical Vol./Cap.(X): 1.192
Loss Time (sec): 12 (Y+R=4.0 sec) Average Delay (sec/veh): 92.6
Optimal Cycle: 130 Level Of Service: F

Street Name:	Washington St						Overlook Pkwy					
Approach:	North Bound			South Bound			East Bound			West Bound		
Movement:	L	T	R	L	T	R	L	T	R	L	T	R
Control:	Protected			Protected			Protected			Protected		
Rights:	Include			Include			Include			Ovl		
Min. Green:	7	7	7	7	7	7	7	7	7	7	7	7
Lanes:	0 0	1 1	0	1 0	2 0	0	0 0	0 0	0	1 0	0 0	1
Volume Module:												
Base Vol:	0	1231	108	1111	1632	0	0	0	0	104	0	1092
Growth Adj:	1.00	1.00	1.00	1.00	1.00	1.00	1.00	1.00	1.00	1.00	1.00	1.00
Initial Bse:	0	1231	108	1111	1632	0	0	0	0	104	0	1092
Added Vol:	0	0	0	0	0	0	0	0	0	0	0	0
PasserByVol:	0	0	0	0	0	0	0	0	0	0	0	0
Initial Fut:	0	1231	108	1111	1632	0	0	0	0	104	0	1092
User Adj:	1.00	1.00	1.00	1.00	1.00	1.00	1.00	1.00	1.00	1.00	1.00	1.00
PHF Adj:	1.00	1.00	1.00	1.00	1.00	1.00	1.00	1.00	1.00	1.00	1.00	1.00
PHF Volume:	0	1231	108	1111	1632	0	0	0	0	104	0	1092
Reduct Vol:	0	0	0	0	0	0	0	0	0	0	0	0
Reduced Vol:	0	1231	108	1111	1632	0	0	0	0	104	0	1092
PCE Adj:	1.00	1.00	1.00	1.00	1.00	1.00	1.00	1.00	1.00	1.00	1.00	1.00
MLF Adj:	1.00	1.00	1.00	1.00	1.00	1.00	1.00	1.00	1.00	1.00	1.00	1.00
FinalVolume:	0	1231	108	1111	1632	0	0	0	0	104	0	1092
Saturation Flow Module:												
Sat/Lane:	1900	1900	1900	1900	1900	1900	1900	1900	1900	1900	1900	1900
Adjustment:	1.00	0.94	0.94	0.95	0.95	1.00	1.00	1.00	1.00	0.95	1.00	0.85
Lanes:	0.00	1.84	0.16	1.00	2.00	0.00	0.00	0.00	0.00	1.00	0.00	1.00
Final Sat.:	0	3279	288	1805	3610	0	0	0	0	1805	0	1615
Capacity Analysis Module:												
Vol/Sat:	0.00	0.38	0.38	0.62	0.45	0.00	0.00	0.00	0.00	0.06	0.00	0.68
Crit Moves:		****		****						****		
Green/Cycle:	0.00	0.31	0.31	0.50	0.70	0.00	0.00	0.00	0.00	0.07	0.00	0.57
Volume/Cap:	0.00	1.22	1.22	1.22	0.64	0.00	0.00	0.00	0.00	0.82	0.00	1.18
Delay/Veh:	0.0	143	143.5	135.2	8.7	0.0	0.0	0.0	0.0	79.4	0.0	113.5
User DelAdj:	1.00	1.00	1.00	1.00	1.00	1.00	1.00	1.00	1.00	1.00	1.00	1.00
AdjDel/Veh:	0.0	143	143.5	135.2	8.7	0.0	0.0	0.0	0.0	79.4	0.0	113.5
LOS by Move:	A	F	F	F	A	A	A	A	A	E	A	F
HCM2kAvgQ:	0	40	40	61	15	0	0	0	0	5	0	56

Note: Queue reported is the number of cars per lane.

Overlook Parkway Extension
Future Alt 4
PM Peak Hour

Level Of Service Computation Report
2000 HCM Operations Method (Future Volume Alternative)

Intersection #10 Riverside Ave-SR-91 WB/Arlington Ave

Cycle (sec): 100 Critical Vol./Cap.(X): 1.070
Loss Time (sec): 12 (Y+R=4.0 sec) Average Delay (sec/veh): 62.4
Optimal Cycle: 130 Level Of Service: E

Street Name:	Riverside Ave-SR-91 WB						Arlington Ave					
Approach:	North Bound			South Bound			East Bound			West Bound		
Movement:	L	T	R	L	T	R	L	T	R	L	T	R
Control:	Protected			Protected			Protected			Protected		
Rights:	Include			Ovl			Ignore			Ignore		
Min. Green:	7	7	7	7	7	7	7	7	7	7	7	7
Lanes:	0 0	0 0	0	1 1	0 0	1	1 0	3 0	1	1 0	3 0	1
Volume Module:												
Base Vol:	0	0	0	1002	71	477	38	1965	202	451	1114	191
Growth Adj:	1.00	1.00	1.00	1.00	1.00	1.00	1.00	1.00	1.00	1.00	1.00	1.00
Initial Bse:	0	0	0	1002	71	477	38	1965	202	451	1114	191
Added Vol:	0	0	0	0	0	0	0	0	0	0	0	0
PasserByVol:	0	0	0	0	0	0	0	0	0	0	0	0
Initial Fut:	0	0	0	1002	71	477	38	1965	202	451	1114	191
User Adj:	1.00	1.00	1.00	1.00	1.00	1.00	1.00	1.00	0.00	1.00	1.00	0.00
PHF Adj:	1.00	1.00	1.00	1.00	1.00	1.00	1.00	1.00	0.00	1.00	1.00	0.00
PHF Volume:	0	0	0	1002	71	477	38	1965	0	451	1114	0
Reduct Vol:	0	0	0	0	0	0	0	0	0	0	0	0
Reduced Vol:	0	0	0	1002	71	477	38	1965	0	451	1114	0
PCE Adj:	1.00	1.00	1.00	1.00	1.00	1.00	1.00	1.00	0.00	1.00	1.00	0.00
MLF Adj:	1.00	1.00	1.00	1.00	1.00	1.00	1.00	1.00	0.00	1.00	1.00	0.00
FinalVolume:	0	0	0	1002	71	477	38	1965	0	451	1114	0
Saturation Flow Module:												
Sat/Lane:	1900	1900	1900	1900	1900	1900	1900	1900	1900	1900	1900	1900
Adjustment:	1.00	1.00	1.00	0.90	0.90	0.85	0.95	0.91	1.00	0.95	0.91	1.00
Lanes:	0.00	0.00	0.00	1.87	0.13	1.00	1.00	3.00	1.00	1.00	3.00	1.00
Final Sat.:	0	0	0	3204	227	1615	1805	5187	1900	1805	5187	1900
Capacity Analysis Module:												
Vol/Sat:	0.00	0.00	0.00	0.31	0.31	0.30	0.02	0.38	0.00	0.25	0.21	0.00
Crit Moves:				****				****		****		
Green/Cycle:	0.00	0.00	0.00	0.29	0.29	0.44	0.14	0.35	0.00	0.23	0.44	0.00
Volume/Cap:	0.00	0.00	0.00	1.07	1.07	0.68	0.15	1.07	0.00	1.07	0.48	0.00
Delay/Veh:	0.0	0.0	0.0	84.4	84.4	25.1	37.6	74.8	0.0	102.0	19.9	0.0
User DelAdj:	1.00	1.00	1.00	1.00	1.00	1.00	1.00	1.00	1.00	1.00	1.00	1.00
AdjDel/Veh:	0.0	0.0	0.0	84.4	84.4	25.1	37.6	74.8	0.0	102.0	19.9	0.0
LOS by Move:	A	A	A	F	F	C	D	E	A	F	B	A
HCM2kAvgQ:	0	0	0	26	26	13	1	33	0	22	9	0

Note: Queue reported is the number of cars per lane.

Overlook Parkway Extension
Future Alt 4
PM Peak Hour

Level Of Service Computation Report
2000 HCM Operations Method (Future Volume Alternative)

Intersection #11 Indiana Ave-SR-91 EB/Arlington Ave

Cycle (sec): 100 | Critical Vol./Cap.(X): 0.952
Loss Time (sec): 12 (Y+R=4.0 sec) | Average Delay (sec/veh): 32.7
Optimal Cycle: 130 | Level Of Service: C

Street Name:	Indiana Ave-SR-91 EB						Arlington Ave					
Approach:	North Bound			South Bound			East Bound			West Bound		
Movement:	L -	T -	R	L -	T -	R	L -	T -	R	L -	T -	R
Control:	Protected			Protected			Protected			Protected		
Rights:	Ovl			Include			Ovl			Ignore		
Min. Green:	7	7	7	7	7	7	7	7	7	7	7	7
Lanes:	1 1	1 0	1	0 0	0 0	0	1 0	2 0	1	1 0	4 0	1
Volume Module:												
Base Vol:	199	177	486	0	0	0	353	1938	558	207	1684	166
Growth Adj:	1.00	1.00	1.00	1.00	1.00	1.00	1.00	1.00	1.00	1.00	1.00	1.00
Initial Bse:	199	177	486	0	0	0	353	1938	558	207	1684	166
Added Vol:	0	0	0	0	0	0	0	0	0	0	0	0
PasserByVol:	0	0	0	0	0	0	0	0	0	0	0	0
Initial Fut:	199	177	486	0	0	0	353	1938	558	207	1684	166
User Adj:	1.00	1.00	1.00	1.00	1.00	1.00	1.00	1.00	1.00	1.00	1.00	0.00
PHF Adj:	1.00	1.00	1.00	1.00	1.00	1.00	1.00	1.00	1.00	1.00	1.00	0.00
PHF Volume:	199	177	486	0	0	0	353	1938	558	207	1684	0
Reduct Vol:	0	0	0	0	0	0	0	0	0	0	0	0
Reduced Vol:	199	177	486	0	0	0	353	1938	558	207	1684	0
PCE Adj:	1.00	1.00	1.00	1.00	1.00	1.00	1.00	1.00	1.00	1.00	1.00	0.00
MLF Adj:	1.00	1.00	1.00	1.00	1.00	1.00	1.00	1.00	1.00	1.00	1.00	0.00
FinalVolume:	199	177	486	0	0	0	353	1938	558	207	1684	0
Saturation Flow Module:												
Sat/Lane:	1900	1900	1900	1900	1900	1900	1900	1900	1900	1900	1900	1900
Adjustment:	0.92	0.92	0.85	1.00	1.00	1.00	0.95	0.95	0.85	0.95	0.91	1.00
Lanes:	1.59	1.41	1.00	0.00	0.00	0.00	1.00	2.00	1.00	1.00	4.00	1.00
Final Sat.:	2766	2460	1615	0	0	0	1805	3610	1615	1805	6916	1900
Capacity Analysis Module:												
Vol/Sat:	0.07	0.07	0.30	0.00	0.00	0.00	0.20	0.54	0.35	0.11	0.24	0.00
Crit Moves:			****					****		****		
Green/Cycle:	0.13	0.20	0.32	0.00	0.00	0.00	0.30	0.56	0.70	0.12	0.38	0.00
Volume/Cap:	0.53	0.37	0.95	0.00	0.00	0.00	0.64	0.95	0.49	0.95	0.64	0.00
Delay/Veh:	41.1	35.1	61.5	0.0	0.0	0.0	32.6	31.3	7.3	91.1	26.0	0.0
User DelAdj:	1.00	1.00	1.00	1.00	1.00	1.00	1.00	1.00	1.00	1.00	1.00	1.00
AdjDel/Veh:	41.1	35.1	61.5	0.0	0.0	0.0	32.6	31.3	7.3	91.1	26.0	0.0
LOS by Move:	D	D	E	A	A	A	C	C	A	F	C	A
HCM2kAvgQ:	4	4	20	0	0	0	10	35	8	10	12	0

Note: Queue reported is the number of cars per lane.

Overlook Parkway Extension
Future Alt 4
PM Peak Hour

Level Of Service Computation Report
2000 HCM Operations Method (Future Volume Alternative)

Intersection #12 Victoria Ave/Arlington Ave

Cycle (sec): 100 | Critical Vol./Cap.(X): 1.055
Loss Time (sec): 16 (Y+R=4.0 sec) | Average Delay (sec/veh): 61.5
Optimal Cycle: 130 | Level Of Service: E

Street Name:	Victoria Ave						Arlington Ave					
Approach:	North Bound			South Bound			East Bound			West Bound		
Movement:	L -	T -	R	L -	T -	R	L -	T -	R	L -	T -	R
Control:	Protected			Protected			Protected			Protected		
Rights:	Ovl			Include			Include			Include		
Min. Green:	7	7	7	7	7	7	7	7	7	7	7	7
Lanes:	1 0	1 0	1	1 0	1 0	1	1 0	2 1	0	1 0	2 1	0
Volume Module:												
Base Vol:	7	259	343	374	323	214	244	2094	11	246	1455	223
Growth Adj:	1.00	1.00	1.00	1.00	1.00	1.00	1.00	1.00	1.00	1.00	1.00	1.00
Initial Bse:	7	259	343	374	323	214	244	2094	11	246	1455	223
Added Vol:	0	0	0	0	0	0	0	0	0	0	0	0
PasserByVol:	0	0	0	0	0	0	0	0	0	0	0	0
Initial Fut:	7	259	343	374	323	214	244	2094	11	246	1455	223
User Adj:	1.00	1.00	1.00	1.00	1.00	1.00	1.00	1.00	1.00	1.00	1.00	1.00
PHF Adj:	1.00	1.00	1.00	1.00	1.00	1.00	1.00	1.00	1.00	1.00	1.00	1.00
PHF Volume:	7	259	343	374	323	214	244	2094	11	246	1455	223
Reduct Vol:	0	0	0	0	0	0	0	0	0	0	0	0
Reduced Vol:	7	259	343	374	323	214	244	2094	11	246	1455	223
PCE Adj:	1.00	1.00	1.00	1.00	1.00	1.00	1.00	1.00	1.00	1.00	1.00	1.00
MLF Adj:	1.00	1.00	1.00	1.00	1.00	1.00	1.00	1.00	1.00	1.00	1.00	1.00
FinalVolume:	7	259	343	374	323	214	244	2094	11	246	1455	223
Saturation Flow Module:												
Sat/Lane:	1900	1900	1900	1900	1900	1900	1900	1900	1900	1900	1900	1900
Adjustment:	0.95	1.00	0.85	0.95	1.00	0.85	0.95	0.91	0.91	0.95	0.89	0.89
Lanes:	1.00	1.00	1.00	1.00	1.00	1.00	1.00	2.98	0.02	1.00	2.60	0.40
Final Sat.:	1805	1900	1615	1805	1900	1615	1805	5155	27	1805	4408	676
Capacity Analysis Module:												
Vol/Sat:	0.00	0.14	0.21	0.21	0.17	0.13	0.14	0.41	0.41	0.14	0.33	0.33
Crit Moves:		****		****				****		****		
Green/Cycle:	0.09	0.13	0.26	0.20	0.23	0.23	0.15	0.39	0.39	0.13	0.36	0.36
Volume/Cap:	0.04	1.05	0.82	1.05	0.74	0.57	0.90	1.05	1.05	1.05	0.90	0.90
Delay/Veh:	41.2	116	47.2	103.1	42.1	36.3	72.9	67.2	67.2	117.6	36.8	36.8
User DelAdj:	1.00	1.00	1.00	1.00	1.00	1.00	1.00	1.00	1.00	1.00	1.00	1.00
AdjDel/Veh:	41.2	116	47.2	103.1	42.1	36.3	72.9	67.2	67.2	117.6	36.8	36.8
LOS by Move:	D	F	D	F	D	D	E	E	E	F	D	D
HCM2kAvgQ:	0	14	12	19	11	7	11	34	34	13	22	22

Note: Queue reported is the number of cars per lane.

Overlook Parkway Extension
Future Alt 4
PM Peak Hour

Level Of Service Computation Report
2000 HCM Operations Method (Future Volume Alternative)

Intersection #13 Alessandro Blvd/Arlington Ave

Cycle (sec): 100 Critical Vol./Cap.(X): 1.163
Loss Time (sec): 16 (Y+R=4.0 sec) Average Delay (sec/veh): 91.2
Optimal Cycle: 130 Level Of Service: F

Street Name:	Alessandro Blvd						Arlington Ave					
Approach:	North Bound			South Bound			East Bound			West Bound		
Movement:	L -	T -	R	L -	T -	R	L -	T -	R	L -	T -	R
Control:	Protected			Protected			Protected			Protected		
Rights:	Ovl			Include			Ovl			Ovl		
Min. Green:	7	7	7	7	7	7	7	7	7	7	7	7
Lanes:	2 0	2 0	1	2 0	2 1	0	1 0	2 0	2	2 0	2 0	1
Volume Module:												
Base Vol:	1025	785	129	460	1396	29	79	1004	1648	427	908	299
Growth Adj:	1.00	1.00	1.00	1.00	1.00	1.00	1.00	1.00	1.00	1.00	1.00	1.00
Initial Bse:	1025	785	129	460	1396	29	79	1004	1648	427	908	299
Added Vol:	0	0	0	0	0	0	0	0	0	0	0	0
PasserByVol:	0	0	0	0	0	0	0	0	0	0	0	0
Initial Fut:	1025	785	129	460	1396	29	79	1004	1648	427	908	299
User Adj:	1.00	1.00	1.00	1.00	1.00	1.00	1.00	1.00	1.00	1.00	1.00	1.00
PHF Adj:	1.00	1.00	1.00	1.00	1.00	1.00	1.00	1.00	1.00	1.00	1.00	1.00
PHF Volume:	1025	785	129	460	1396	29	79	1004	1648	427	908	299
Reduct Vol:	0	0	0	0	0	0	0	0	0	0	0	0
Reduced Vol:	1025	785	129	460	1396	29	79	1004	1648	427	908	299
PCE Adj:	1.00	1.00	1.00	1.00	1.00	1.00	1.00	1.00	1.00	1.00	1.00	1.00
MLF Adj:	1.00	1.00	1.00	1.00	1.00	1.00	1.00	1.00	1.00	1.00	1.00	1.00
FinalVolume:	1025	785	129	460	1396	29	79	1004	1648	427	908	299
Saturation Flow Module:												
Sat/Lane:	1900	1900	1900	1900	1900	1900	1900	1900	1900	1900	1900	1900
Adjustment:	0.92	0.95	0.85	0.92	0.91	0.91	0.95	0.95	0.75	0.92	0.95	0.85
Lanes:	2.00	2.00	1.00	2.00	2.94	0.06	1.00	2.00	2.00	2.00	2.00	1.00
Final Sat.:	3502	3610	1615	3502	5066	105	1805	3610	2842	3502	3610	1615
Capacity Analysis Module:												
Vol/Sat:	0.29	0.22	0.08	0.13	0.28	0.28	0.04	0.28	0.58	0.12	0.25	0.19
Crit Moves:	****				****				****	****		
Green/Cycle:	0.25	0.30	0.41	0.18	0.24	0.24	0.08	0.25	0.50	0.10	0.28	0.46
Volume/Cap:	1.16	0.71	0.20	0.71	1.16	1.16	0.57	1.13	1.16	1.16	0.91	0.40
Delay/Veh:	123.4	33.2	19.1	42.1	121	121.0	50.3	109	106.8	144.1	47.7	18.3
User DelAdj:	1.00	1.00	1.00	1.00	1.00	1.00	1.00	1.00	1.00	1.00	1.00	1.00
AdjDel/Veh:	123.4	33.2	19.1	42.1	121	121.0	50.3	109	106.8	144.1	47.7	18.3
LOS by Move:	F	C	B	D	F	F	D	F	F	F	D	B
HCM2kAvgQ:	29	12	3	8	28	28	3	27	48	14	18	6

Note: Queue reported is the number of cars per lane.

Overlook Parkway Extension
Future Alt 4
PM Peak Hour

Level Of Service Computation Report
2000 HCM Operations Method (Future Volume Alternative)

Intersection #14 Alessandro Blvd/Overlook Pkwy

Cycle (sec): 100 Critical Vol./Cap.(X): 2.055
Loss Time (sec): 16 (Y+R=4.0 sec) Average Delay (sec/veh): 358.0
Optimal Cycle: 130 Level Of Service: F

Street Name:	Alessandro Blvd						Overlook Pkwy					
Approach:	North Bound			South Bound			East Bound			West Bound		
Movement:	L -	T -	R	L -	T -	R	L -	T -	R	L -	T -	R
Control:	Protected			Protected			Protected			Protected		
Rights:	Include			Include			Include			Include		
Min. Green:	7	7	7	7	7	7	7	7	7	7	7	7
Lanes:	1 0	3 0	1	1 0	2 1	0	1 0	1 1	0	2 0	1 1	0
Volume Module:												
Base Vol:	667	1585	668	13	2859	256	46	83	905	589	239	4
Growth Adj:	1.00	1.00	1.00	1.00	1.00	1.00	1.00	1.00	1.00	1.00	1.00	1.00
Initial Bse:	667	1585	668	13	2859	256	46	83	905	589	239	4
Added Vol:	0	0	0	0	0	0	0	0	0	0	0	0
PasserByVol:	0	0	0	0	0	0	0	0	0	0	0	0
Initial Fut:	667	1585	668	13	2859	256	46	83	905	589	239	4
User Adj:	1.00	1.00	1.00	1.00	1.00	1.00	1.00	1.00	1.00	1.00	1.00	1.00
PHF Adj:	1.00	1.00	1.00	1.00	1.00	1.00	1.00	1.00	1.00	1.00	1.00	1.00
PHF Volume:	667	1585	668	13	2859	256	46	83	905	589	239	4
Reduct Vol:	0	0	0	0	0	0	0	0	0	0	0	0
Reduced Vol:	667	1585	668	13	2859	256	46	83	905	589	239	4
PCE Adj:	1.00	1.00	1.00	1.00	1.00	1.00	1.00	1.00	1.00	1.00	1.00	1.00
MLF Adj:	1.00	1.00	1.00	1.00	1.00	1.00	1.00	1.00	1.00	1.00	1.00	1.00
FinalVolume:	667	1585	668	13	2859	256	46	83	905	589	239	4
Saturation Flow Module:												
Sat/Lane:	1900	1900	1900	1900	1900	1900	1900	1900	1900	1900	1900	1900
Adjustment:	0.95	0.91	0.85	0.95	0.90	0.90	0.95	0.82	0.82	0.92	0.95	0.95
Lanes:	1.00	3.00	1.00	1.00	2.75	0.25	1.00	1.00	1.00	2.00	1.97	0.03
Final Sat.:	1805	5187	1615	1805	4704	421	1805	1558	1558	3502	3543	59
Capacity Analysis Module:												
Vol/Sat:	0.37	0.31	0.41	0.01	0.61	0.61	0.03	0.05	0.58	0.17	0.07	0.07
Crit Moves:	****				****				****	****		
Green/Cycle:	0.18	0.41	0.41	0.07	0.30	0.30	0.18	0.28	0.28	0.08	0.18	0.18
Volume/Cap:	2.06	0.75	1.02	0.10	2.06	2.06	0.14	0.19	2.06	2.06	0.37	0.37
Delay/Veh:	526.5	27.0	70.0	43.9	512	512.5	34.5	27.2	518.0	532.8	36.2	36.2
User DelAdj:	1.00	1.00	1.00	1.00	1.00	1.00	1.00	1.00	1.00	1.00	1.00	1.00
AdjDel/Veh:	526.5	27.0	70.0	43.9	512	512.5	34.5	27.2	518.0	532.8	36.2	36.2
LOS by Move:	F	C	E	D	F	F	C	C	F	F	D	D
HCM2kAvgQ:	63	17	29	0	107	107	1	2	89	30	4	4

Note: Queue reported is the number of cars per lane.

Overlook Parkway Extension
Future Alt 4
PM Peak Hour

Level Of Service Computation Report
2000 HCM Operations Method (Future Volume Alternative)

Intersection #15 Alessandro Blvd/Trautwein Rd

Cycle (sec): 100 Critical Vol./Cap.(X): 0.982
Loss Time (sec): 12 (Y+R=4.0 sec) Average Delay (sec/veh): 39.9
Optimal Cycle: 130 Level Of Service: D

Street Name:	Alessandro Blvd						Trautwein Rd					
Approach:	North Bound			South Bound			East Bound			West Bound		
Movement:	L	T	R	L	T	R	L	T	R	L	T	R
Control:	Protected			Protected			Protected			Protected		
Rights:	Include			Ignore			Ignore			Include		
Min. Green:	7	7	7	7	7	7	7	7	7	7	7	7
Lanes:	2 0	3 0	0	0 0	3 0	1	3 0	0 0	1	0 0	0 0	0
Volume Module:												
Base Vol:	328	1689	0	0	2547	1462	1469	0	367	0	0	0
Growth Adj:	1.00	1.00	1.00	1.00	1.00	1.00	1.00	1.00	1.00	1.00	1.00	1.00
Initial Bse:	328	1689	0	0	2547	1462	1469	0	367	0	0	0
Added Vol:	0	0	0	0	0	0	0	0	0	0	0	0
PasserByVol:	0	0	0	0	0	0	0	0	0	0	0	0
Initial Fut:	328	1689	0	0	2547	1462	1469	0	367	0	0	0
User Adj:	1.00	1.00	1.00	1.00	1.00	0.00	1.00	1.00	0.00	1.00	1.00	1.00
PHF Adj:	1.00	1.00	1.00	1.00	1.00	0.00	1.00	1.00	0.00	1.00	1.00	1.00
PHF Volume:	328	1689	0	0	2547	0	1469	0	0	0	0	0
Reduct Vol:	0	0	0	0	0	0	0	0	0	0	0	0
Reduced Vol:	328	1689	0	0	2547	0	1469	0	0	0	0	0
PCE Adj:	1.00	1.00	1.00	1.00	1.00	0.00	1.00	1.00	0.00	1.00	1.00	1.00
MLF Adj:	1.00	1.00	1.00	1.00	1.00	0.00	1.00	1.00	0.00	1.00	1.00	1.00
FinalVolume:	328	1689	0	0	2547	0	1469	0	0	0	0	0
Saturation Flow Module:												
Sat/Lane:	1900	1900	1900	1900	1900	1900	1900	1900	1900	1900	1900	1900
Adjustment:	0.92	0.91	1.00	1.00	0.91	1.00	0.92	1.00	1.00	1.00	1.00	1.00
Lanes:	2.00	3.00	0.00	0.00	3.00	1.00	3.00	0.00	1.00	0.00	0.00	0.00
Final Sat.:	3502	5187	0	0	5187	1900	5253	0	1900	0	0	0
Capacity Analysis Module:												
Vol/Sat:	0.09	0.33	0.00	0.00	0.49	0.00	0.28	0.00	0.00	0.00	0.00	0.00
Crit Moves:	****				****		****					
Green/Cycle:	0.10	0.49	0.00	0.00	0.50	0.00	0.28	0.00	0.00	0.00	0.00	0.00
Volume/Cap:	0.98	0.66	0.00	0.00	0.98	0.00	0.98	0.00	0.00	0.00	0.00	0.00
Delay/Veh:	89.4	20.0	0.0	0.0	38.3	0.0	54.6	0.0	0.0	0.0	0.0	0.0
User DelAdj:	1.00	1.00	1.00	1.00	1.00	1.00	1.00	1.00	1.00	1.00	1.00	1.00
AdjDel/Veh:	89.4	20.0	0.0	0.0	38.3	0.0	54.6	0.0	0.0	0.0	0.0	0.0
LOS by Move:	F	B	A	A	D	A	D	A	A	A	A	A
HCM2kAvgQ:	9	15	0	0	35	0	21	0	0	0	0	0

Note: Queue reported is the number of cars per lane.

Overlook Parkway Extension
Future Alt 4
PM Peak Hour

Level Of Service Computation Report
2000 HCM 4-Way Stop Method (Future Volume Alternative)

Intersection #16 Crystal View Ter/Overlook Pkwy

Cycle (sec): 100 Critical Vol./Cap.(X): 1.110
Loss Time (sec): 0 (Y+R=4.0 sec) Average Delay (sec/veh): 79.5
Optimal Cycle: 0 Level Of Service: F

Street Name:	Crystal View Ter						Overlook Pkwy					
Approach:	North Bound			South Bound			East Bound			West Bound		
Movement:	L	T	R	L	T	R	L	T	R	L	T	R
Control:	Stop Sign			Stop Sign			Stop Sign			Stop Sign		
Rights:	Include			Include			Include			Include		
Min. Green:	7	7	7	7	7	7	7	7	7	7	7	7
Lanes:	0 0	1! 0	0	0 0	1 0	0	1 0	1 1	0	1 0	1 1	0
Volume Module:												
Base Vol:	42	0	13	0	2	0	1	1020	261	17	1163	0
Growth Adj:	1.00	1.00	1.00	1.00	1.00	1.00	1.00	1.00	1.00	1.00	1.00	1.00
Initial Bse:	42	0	13	0	2	0	1	1020	261	17	1163	0
Added Vol:	0	0	0	0	0	0	0	0	0	0	0	0
PasserByVol:	0	0	0	0	0	0	0	0	0	0	0	0
Initial Fut:	42	0	13	0	2	0	1	1020	261	17	1163	0
User Adj:	1.00	1.00	1.00	1.00	1.00	1.00	1.00	1.00	1.00	1.00	1.00	1.00
PHF Adj:	1.00	1.00	1.00	1.00	1.00	1.00	1.00	1.00	1.00	1.00	1.00	1.00
PHF Volume:	42	0	13	0	2	0	1	1020	261	17	1163	0
Reduct Vol:	0	0	0	0	0	0	0	0	0	0	0	0
Reduced Vol:	42	0	13	0	2	0	1	1020	261	17	1163	0
PCE Adj:	1.00	1.00	1.00	1.00	1.00	1.00	1.00	1.00	1.00	1.00	1.00	1.00
MLF Adj:	1.00	1.00	1.00	1.00	1.00	1.00	1.00	1.00	1.00	1.00	1.00	1.00
FinalVolume:	42	0	13	0	2	0	1	1020	261	17	1163	0
Saturation Flow Module:												
Adjustment:	1.00	1.00	1.00	1.00	1.00	1.00	1.00	1.00	1.00	1.00	1.00	1.00
Lanes:	0.76	0.00	0.24	0.00	1.00	0.00	1.00	1.59	0.41	1.00	2.00	0.00
Final Sat.:	400	0	124	0	502	0	526	919	242	526	1134	0
Capacity Analysis Module:												
Vol/Sat:	0.10	xxxx	0.10	xxxx	0.00	xxxx	0.00	1.11	1.08	0.03	1.03	xxxx
Crit Moves:			****		****			****			****	
Delay/Veh:	10.7	0.0	10.7	0.0	10.1	0.0	9.6	95.3	83.7	9.8	69.1	0.0
Delay Adj:	1.00	1.00	1.00	1.00	1.00	1.00	1.00	1.00	1.00	1.00	1.00	1.00
AdjDel/Veh:	10.7	0.0	10.7	0.0	10.1	0.0	9.6	95.3	83.7	9.8	69.1	0.0
LOS by Move:	B	*	B	*	B	*	A	F	F	A	F	*
ApproachDel:	10.7			10.1			92.9			68.3		
Delay Adj:	1.00			1.00			1.00			1.00		
ApprAdjDel:	10.7			10.1			92.9			68.3		
LOS by Appr:	B			B			F			F		
AllWayAvgQ:	0.1	0.1	0.1	0.0	0.0	0.0	0.0	14.7	12.4	0.0	9.5	9.5

Overlook Parkway Extension
Future Alt 4
PM Peak Hour

Note: Queue reported is the number of cars per lane.

Overlook Parkway Extension
Future Alt 4
PM Peak Hour

Level Of Service Computation Report
2000 HCM Unsignalized Method (Future Volume Alternative)

Intersection #17 Kingdom Dr/Overlook Pkwy

Average Delay (sec/veh): 79.1 Worst Case Level Of Service: F[1186.7]

Street Name:	Kingdom Dr									Overlook Pkwy							
Approach:	North Bound				South Bound				East Bound				West Bound				
Movement:	L	-	T	-	R	L	-	T	-	R	L	-	T	-	R	L	-	T	-	R
Control:	Stop Sign					Stop Sign					Uncontrolled					Uncontrolled				
Rights:	Include					Include					Include					Include				
Lanes:	0	0	1!	0	0	1	0	0	0	0	1	0	1	1	0	1	0	1	1	0
Volume Module:																				
Base Vol:	69		0	107		4		0		0	0	1194		133		169	1001			5
Growth Adj:	1.00	1.00	1.00	1.00	1.00	1.00	1.00	1.00	1.00	1.00	1.00	1.00	1.00	1.00	1.00	1.00	1.00	1.00	1.00	1.00
Initial Bse:	69		0	107		4		0		0	0	1194		133		169	1001			5
Added Vol:	0		0	0		0		0		0	0	0		0		0	0			0
PasserByVol:	0		0	0		0		0		0	0	0		0		0	0			0
Initial Fut:	69		0	107		4		0		0	0	1194		133		169	1001			5
User Adj:	1.00	1.00	1.00	1.00	1.00	1.00	1.00	1.00	1.00	1.00	1.00	1.00	1.00	1.00	1.00	1.00	1.00	1.00	1.00	1.00
PHF Adj:	1.00	1.00	1.00	1.00	1.00	1.00	1.00	1.00	1.00	1.00	1.00	1.00	1.00	1.00	1.00	1.00	1.00	1.00	1.00	1.00
PHF Volume:	69		0	107		4		0		0	0	1194		133		169	1001			5
Reduct Vol:	0		0	0		0		0		0	0	0		0		0	0			0
FinalVolume:	69		0	107		4		0		0	0	1194		133		169	1001			5
Critical Gap Module:																				
Critical Gp:	7.5	6.5		6.9		7.5	xxxx	xxxxx	xxxxx	xxxx	xxxxx			4.1	xxxx	xxxxx				
FollowUpTim:	3.5	4.0		3.3		3.5	xxxx	xxxxx	xxxxx	xxxx	xxxxx			2.2	xxxx	xxxxx				
Capacity Module:																				
Cnflict Vol:	2099	2605		664		1939	xxxx	xxxxx		xxxx	xxxx	xxxxx		1327	xxxx	xxxxx				
Potent Cap.:	30	25		408		40	xxxx	xxxxx		xxxx	xxxx	xxxxx		527	xxxx	xxxxx				
Move Cap.:	23	17		408		22	xxxx	xxxxx		xxxx	xxxx	xxxxx		527	xxxx	xxxxx				
Volume/Cap:	3.02	0.00		0.26		0.18	xxxx	xxxx		xxxx	xxxx	xxxx		0.32	xxxx	xxxx				
Level Of Service Module:																				
2Way95thQ:	xxxx	xxxx		xxxxx		0.5	xxxx	xxxxx		xxxx	xxxx	xxxxx		1.4	xxxx	xxxxx				
Control Del:	xxxxx	xxxx		xxxxx		198.5	xxxx	xxxxx		xxxxx	xxxx	xxxxx		15.0	xxxx	xxxxx				
LOS by Move:	*	*		*		F	*	*		*	*	*		C	*	*				
Movement:	LT -	LTR -		RT		LT -	LTR -			RT	LT -	LTR -		RT	LT -	LTR -				RT
Shared Cap.:	xxxx	54		xxxxx		xxxx	xxxx	xxxxx			xxxx	xxxx	xxxxx		xxxx	xxxx	xxxxx			
SharedQueue:	xxxxx	18.8		xxxxx		xxxxx	xxxx	xxxxx			xxxxx	xxxx	xxxxx		xxxxx	xxxx	xxxxx			
Shrd ConDel:	xxxxx	1187		xxxxx		xxxxx	xxxx	xxxxx			xxxxx	xxxx	xxxxx		xxxxx	xxxx	xxxxx			
Shared LOS:	*	F		*		*	*	*			*	*	*		*	*	*			
ApproachDel:	1186.7					198.5					xxxxxx				xxxxxx					
ApproachLOS:	F					F					*				*					

Note: Queue reported is the number of cars per lane.

Overlook Parkway Extension
Future Alt 4
PM Peak Hour

Level Of Service Computation Report
2000 HCM Unsignalized Method (Future Volume Alternative)

Intersection #18 Kingdom Dr/Green Orchard Pl

Average Delay (sec/veh): 2.3 Worst Case Level Of Service: A[9.2]

Street Name:	Kingdom Dr								Green Orchard Pl							
Approach:	North Bound				South Bound				East Bound				West Bound			
Movement:	L	-	T	-	R	L	-	T	-	R	L	-	T	-	R	L	-	T	-	R
Control:	Uncontrolled				Uncontrolled				Stop Sign				Stop Sign			
Rights:	Include				Include				Include				Include			
Lanes:	0	0	0	1	0	0	1	0	0	0	0	0	0	0	0	1!	0	0
Volume Module:																		
Base Vol:	0	141		10		97	191		0		0	0		0		1	0	37
Growth Adj:	1.00	1.00		1.00		1.00	1.00		1.00		1.00	1.00		1.00		1.00	1.00	1.00
Initial Bse:	0	141		10		97	191		0		0	0		0		1	0	37
Added Vol:	0	0		0		0	0		0		0	0		0		0	0	0
PasserByVol:	0	0		0		0	0		0		0	0		0		0	0	0
Initial Fut:	0	141		10		97	191		0		0	0		0		1	0	37
User Adj:	1.00	1.00		1.00		1.00	1.00		1.00		1.00	1.00		1.00		1.00	1.00	1.00
PHF Adj:	1.00	1.00		1.00		1.00	1.00		1.00		1.00	1.00		1.00		1.00	1.00	1.00
PHF Volume:	0	141		10		97	191		0		0	0		0		1	0	37
Reduct Vol:	0	0		0		0	0		0		0	0		0		0	0	0
FinalVolume:	0	141		10		97	191		0		0	0		0		1	0	37
Critical Gap Module:																		
Critical Gp:	xxxxx	xxxx		xxxxx		4.1	xxxx		xxxxx		xxxxx	xxxx		xxxxx		6.4	6.5	6.2
FollowUpTim:	xxxxx	xxxx		xxxxx		2.2	xxxx		xxxxx		xxxxx	xxxx		xxxxx		3.5	4.0	3.3
Capacity Module:																		
Cnflict Vol:	xxxx	xxxx		xxxxx		151	xxxx		xxxxx		xxxx	xxxx		xxxxx		531	531	146
Potent Cap.:	xxxx	xxxx		xxxxx		1442	xxxx		xxxxx		xxxx	xxxx		xxxxx		512	457	906
Move Cap.:	xxxx	xxxx		xxxxx		1442	xxxx		xxxxx		xxxx	xxxx		xxxxx		484	424	906
Volume/Cap:	xxxx	xxxx		xxxx		0.07	xxxx		xxxx		xxxx	xxxx		xxxx		0.00	0.00	0.04
Level Of Service Module:																		
2Way95thQ:	xxxx	xxxx		xxxxx		0.2	xxxx		xxxxx		xxxx	xxxx		xxxxx		xxxx	xxxx	xxxxx
Control Del:	xxxxx	xxxx		xxxxx		7.7	xxxx		xxxxx		xxxxx	xxxx		xxxxx		xxxxx	xxxx	xxxxx
LOS by Move:	*	*		*		A	*		*		*	*		*		*	*	*
Movement:	LT - LTR - RT					LT - LTR - RT					LT - LTR - RT					LT - LTR - RT		
Shared Cap.:	xxxx	xxxx		xxxxx		xxxx	xxxx		xxxxx		xxxx	xxxx		xxxxx		xxxx	886	xxxxx
SharedQueue:	xxxxx	xxxx		xxxxx		0.2	xxxx		xxxxx		xxxxx	xxxx		xxxxx		xxxxx	0.1	xxxxx
Shrd ConDel:	xxxxx	xxxx		xxxxx		7.7	xxxx		xxxxx		xxxxx	xxxx		xxxxx		xxxxx	9.2	xxxxx
Shared LOS:	*	*		*		A	*		*		*	*		*		*	A	*
ApproachDel:	xxxxxx					xxxxxx					xxxxxx						9.2	
ApproachLOS:		*					*					*					A	

Note: Queue reported is the number of cars per lane.

Overlook Parkway Extension
Future Alt 4
PM Peak Hour

Level Of Service Computation Report
2000 HCM Operations Method (Future Volume Alternative)

Intersection #19 Trautwein Rd/John F. Kennedy Dr

Cycle (sec): 100 Critical Vol./Cap.(X): 0.914
Loss Time (sec): 16 (Y+R=4.0 sec) Average Delay (sec/veh): 32.4
Optimal Cycle: 122 Level Of Service: C

Street Name:	Trautwein Rd								John F. Kennedy Dr							
Approach:	North Bound				South Bound				East Bound				West Bound			
Movement:	L	-	T	-	R	L	-	T	-	R	L	-	T	-	R	L	-	T	-	R
Control:	Protected				Protected				Protected				Protected			
Rights:	Include				Ovl				Include				Include			
Min. Green:	7	7		7		7	7		7		7	7		7		7	7	7
Lanes:	1	0	2	0	1	1	0	2	0	1	2	0	1	0	1	1	0	0	1	0
Volume Module:																		
Base Vol:	72	1431		91		61	1998		535		452	54		121		64	46	35
Growth Adj:	1.00	1.00		1.00		1.00	1.00		1.00		1.00	1.00		1.00		1.00	1.00	1.00
Initial Bse:	72	1431		91		61	1998		535		452	54		121		64	46	35
Added Vol:	0	0		0		0	0		0		0	0		0		0	0	0
PasserByVol:	0	0		0		0	0		0		0	0		0		0	0	0
Initial Fut:	72	1431		91		61	1998		535		452	54		121		64	46	35
User Adj:	1.00	1.00		1.00		1.00	1.00		1.00		1.00	1.00		1.00		1.00	1.00	1.00
PHF Adj:	1.00	1.00		1.00		1.00	1.00		1.00		1.00	1.00		1.00		1.00	1.00	1.00
PHF Volume:	72	1431		91		61	1998		535		452	54		121		64	46	35
Reduct Vol:	0	0		0		0	0		0		0	0		0		0	0	0
Reduced Vol:	72	1431		91		61	1998		535		452	54		121		64	46	35
PCE Adj:	1.00	1.00		1.00		1.00	1.00		1.00		1.00	1.00		1.00		1.00	1.00	1.00
MLF Adj:	1.00	1.00		1.00		1.00	1.00		1.00		1.00	1.00		1.00		1.00	1.00	1.00
FinalVolume:	72	1431		91		61	1998		535		452	54		121		64	46	35
Saturation Flow Module:																		
Sat/Lane:	1900	1900		1900		1900	1900		1900		1900	1900		1900		1900	1900	1900
Adjustment:	0.95	0.95		0.85		0.95	0.95		0.85		0.92	1.00		0.85		0.95	0.94	0.94
Lanes:	1.00	2.00		1.00		1.00	2.00		1.00		2.00	1.00		1.00		1.00	0.57	0.43
Final Sat.:	1805	3610		1615		1805	3610		1615		3502	1900		1615		1805	1009	768
Capacity Analysis Module:																		
Vol/Sat:	0.04	0.40		0.06		0.03	0.55		0.33		0.13	0.03		0.07		0.04	0.05	0.05
Crit Moves:	****						****				****						****	
Green/Cycle:	0.07	0.54		0.54		0.10	0.57		0.70		0.13	0.10		0.10		0.10	0.07	0.07
Volume/Cap:	0.57	0.73		0.10		0.35	0.98		0.47		0.98	0.27		0.72		0.36	0.65	0.65
Delay/Veh:	51.1	18.8		11.2		43.6	35.4		7.0		78.4	42.0		57.0		43.5	56.9	56.9
User DelAdj:	1.00	1.00		1.00		1.00	1.00		1.00		1.00	1.00		1.00		1.00	1.00	1.00
AdjDel/Veh:	51.1	18.8		11.2		43.6	35.4		7.0		78.4	42.0		57.0		43.5	56.9	56.9
LOS by Move:	D	B		B		D	D		A		E	D		E		D	E	E
HCM2kAvgQ:	3	18		1		2	38		8		11	2		5		2	4	4

Note: Queue reported is the number of cars per lane.

Overlook Parkway Extension
Future Alt 4
PM Peak Hour

Level Of Service Computation Report
2000 HCM Operations Method (Future Volume Alternative)

Intersection #20 Washington St/Bradley St

Cycle (sec): 100 Critical Vol./Cap.(X): 0.988
Loss Time (sec): 12 (Y+R=4.0 sec) Average Delay (sec/veh): 47.8
Optimal Cycle: 130 Level Of Service: D

Street Name:	Washington St									Bradley St					
Approach:	North Bound			South Bound			East Bound			West Bound					
Movement:	L	-	T	-	R	L	-	T	-	R	L	-	T	-	R
Control:	Protected			Protected			Permitted			Permitted					
Rights:	Include			Include			Include			Include					
Min. Green:	7	7	7	7	7	7	7	7	7	7	7	7			
Lanes:	1	0	1	1	0	1	0	1	1	0	0	0	1!	0	0
Volume Module:															
Base Vol:	207	1216	49	220	1587	2	9	66	451	36	46	109			
Growth Adj:	1.00	1.00	1.00	1.00	1.00	1.00	1.00	1.00	1.00	1.00	1.00	1.00			
Initial Bse:	207	1216	49	220	1587	2	9	66	451	36	46	109			
Added Vol:	0	0	0	0	0	0	0	0	0	0	0	0			
PasserByVol:	0	0	0	0	0	0	0	0	0	0	0	0			
Initial Fut:	207	1216	49	220	1587	2	9	66	451	36	46	109			
User Adj:	1.00	1.00	1.00	1.00	1.00	1.00	1.00	1.00	1.00	1.00	1.00	1.00			
PHF Adj:	1.00	1.00	1.00	1.00	1.00	1.00	1.00	1.00	1.00	1.00	1.00	1.00			
PHF Volume:	207	1216	49	220	1587	2	9	66	451	36	46	109			
Reduct Vol:	0	0	0	0	0	0	0	0	0	0	0	0			
Reduced Vol:	207	1216	49	220	1587	2	9	66	451	36	46	109			
PCE Adj:	1.00	1.00	1.00	1.00	1.00	1.00	1.00	1.00	1.00	1.00	1.00	1.00			
MLF Adj:	1.00	1.00	1.00	1.00	1.00	1.00	1.00	1.00	1.00	1.00	1.00	1.00			
FinalVolume:	207	1216	49	220	1587	2	9	66	451	36	46	109			
Saturation Flow Module:															
Sat/Lane:	1900	1900	1900	1900	1900	1900	1900	1900	1900	1900	1900	1900			
Adjustment:	0.95	0.94	0.94	0.95	0.95	0.95	0.88	0.88	0.88	0.70	0.70	0.70			
Lanes:	1.00	1.92	0.08	1.00	1.99	0.01	0.02	0.12	0.86	0.19	0.24	0.57			
Final Sat.:	1805	3449	139	1805	3605	5	29	210	1433	251	320	759			
Capacity Analysis Module:															
Vol/Sat:	0.11	0.35	0.35	0.12	0.44	0.44	0.31	0.31	0.31	0.14	0.14	0.14			
Crit Moves:	****				****			****							
Green/Cycle:	0.12	0.42	0.42	0.14	0.45	0.45	0.32	0.32	0.32	0.32	0.32	0.32			
Volume/Cap:	0.99	0.84	0.84	0.84	0.99	0.99	0.99	0.99	0.99	0.45	0.45	0.45			
Delay/Veh:	102.8	30.8	30.8	63.3	47.1	47.1	69.7	69.7	69.7	27.9	27.9	27.9			
User DelAdj:	1.00	1.00	1.00	1.00	1.00	1.00	1.00	1.00	1.00	1.00	1.00	1.00			
AdjDel/Veh:	102.8	30.8	30.8	63.3	47.1	47.1	69.7	69.7	69.7	27.9	27.9	27.9			
LOS by Move:	F	C	C	E	D	D	E	E	E	C	C	C			
HCM2kAvgQ:	11	21	21	9	33	33	22	22	22	5	5	5			

Note: Queue reported is the number of cars per lane.

Overlook Parkway Extension
Future Alt 4
PM Peak Hour

Level Of Service Computation Report
2000 HCM Operations Method (Future Volume Alternative)

Intersection #21 Alessandro Blvd/Via Vista Dr

Cycle (sec): 100 Critical Vol./Cap.(X): 0.936
Loss Time (sec): 16 (Y+R=4.0 sec) Average Delay (sec/veh): 35.3
Optimal Cycle: 130 Level Of Service: D

Street Name:	Alessandro Blvd									Via Vista Dr					
Approach:	North Bound			South Bound			East Bound			West Bound					
Movement:	L	-	T	-	R	L	-	T	-	R	L	-	T	-	R
Control:	Protected			Protected			Protected			Protected					
Rights:	Include			Include			Include			Include					
Min. Green:	7	7	7	7	7	7	7	7	7	7	7	7			
Lanes:	1	0	2	1	0	1	0	2	1	0	1	0	1	0	1
Volume Module:															
Base Vol:	76	1649	9	86	3032	295	103	30	68	44	49	60			
Growth Adj:	1.00	1.00	1.00	1.00	1.00	1.00	1.00	1.00	1.00	1.00	1.00	1.00			
Initial Bse:	76	1649	9	86	3032	295	103	30	68	44	49	60			
Added Vol:	0	0	0	0	0	0	0	0	0	0	0	0			
PasserByVol:	0	0	0	0	0	0	0	0	0	0	0	0			
Initial Fut:	76	1649	9	86	3032	295	103	30	68	44	49	60			
User Adj:	1.00	1.00	1.00	1.00	1.00	1.00	1.00	1.00	1.00	1.00	1.00	1.00			
PHF Adj:	1.00	1.00	1.00	1.00	1.00	1.00	1.00	1.00	1.00	1.00	1.00	1.00			
PHF Volume:	76	1649	9	86	3032	295	103	30	68	44	49	60			
Reduct Vol:	0	0	0	0	0	0	0	0	0	0	0	0			
Reduced Vol:	76	1649	9	86	3032	295	103	30	68	44	49	60			
PCE Adj:	1.00	1.00	1.00	1.00	1.00	1.00	1.00	1.00	1.00	1.00	1.00	1.00			
MLF Adj:	1.00	1.00	1.00	1.00	1.00	1.00	1.00	1.00	1.00	1.00	1.00	1.00			
FinalVolume:	76	1649	9	86	3032	295	103	30	68	44	49	60			
Saturation Flow Module:															
Sat/Lane:	1900	1900	1900	1900	1900	1900	1900	1900	1900	1900	1900	1900			
Adjustment:	0.95	0.91	0.91	0.95	0.90	0.90	0.95	1.00	0.85	0.95	1.00	0.85			
Lanes:	1.00	2.98	0.02	1.00	2.73	0.27	1.00	1.00	1.00	1.00	1.00	1.00			
Final Sat.:	1805	5154	28	1805	4666	454	1805	1900	1615	1805	1900	1615			
Capacity Analysis Module:															
Vol/Sat:	0.04	0.32	0.32	0.05	0.65	0.65	0.06	0.02	0.04	0.02	0.03	0.04			
Crit Moves:	****				****		****					****			
Green/Cycle:	0.07	0.57	0.57	0.13	0.63	0.63	0.07	0.07	0.07	0.07	0.07	0.07			
Volume/Cap:	0.60	0.56	0.56	0.38	1.03	1.03	0.82	0.23	0.60	0.35	0.37	0.53			
Delay/Veh:	53.0	13.6	13.6	41.2	43.2	43.2	77.8	44.8	53.9	46.0	46.1	49.7			
User DelAdj:	1.00	1.00	1.00	1.00	1.00	1.00	1.00	1.00	1.00	1.00	1.00	1.00			
AdjDel/Veh:	53.0	13.6	13.6	41.2	43.2	43.2	77.8	44.8	53.9	46.0	46.1	49.7			
LOS by Move:	D	B	B	D	D	D	E	D	D	D	D	D			
HCM2kAvgQ:	3	12	12	3	49	49	5	1	3	2	2	3			

Note: Queue reported is the number of cars per lane.

Overlook Parkway Extension
Future Alt 4
PM Peak Hour

Level Of Service Computation Report
2000 HCM 4-Way Stop Method (Future Volume Alternative)

Intersection #23 Mary St/Hawarden Dr

Cycle (sec): 100 Critical Vol./Cap.(X): 0.684
Loss Time (sec): 0 (Y+R=4.0 sec) Average Delay (sec/veh): 13.4
Optimal Cycle: 0 Level Of Service: B

Street Name:	Mary St									Hawarden Dr							
Approach:	North Bound				South Bound				East Bound				West Bound				
Movement:	L	-	T	-	R	L	-	T	-	R	L	-	T	-	R	L	-	T	-	R
Control:	Stop Sign					Stop Sign					Stop Sign					Stop Sign				
Rights:	Include					Include					Include					Include				
Min. Green:	7	7	7			7	7	7			7	7	7			7	7	7		
Lanes:	0	1	0	0	0	0	0	0	1	0	0	0	1!	0	0	0	0	0	0	0
Volume Module:																				
Base Vol:	7	81	0			0	285	344			72	0	7			0	0	0		
Growth Adj:	1.00	1.00	1.00			1.00	1.00	1.00			1.00	1.00	1.00			1.00	1.00	1.00		
Initial Bse:	7	81	0			0	285	344			72	0	7			0	0	0		
Added Vol:	0	0	0			0	0	0			0	0	0			0	0	0		
PasserByVol:	0	0	0			0	0	0			0	0	0			0	0	0		
Initial Fut:	7	81	0			0	285	344			72	0	7			0	0	0		
User Adj:	1.00	1.00	1.00			1.00	1.00	1.00			1.00	1.00	1.00			1.00	1.00	1.00		
PHF Adj:	1.00	1.00	1.00			1.00	1.00	1.00			1.00	1.00	1.00			1.00	1.00	1.00		
PHF Volume:	7	81	0			0	285	344			72	0	7			0	0	0		
Reduct Vol:	0	0	0			0	0	0			0	0	0			0	0	0		
Reduced Vol:	7	81	0			0	285	344			72	0	7			0	0	0		
PCE Adj:	1.00	1.00	1.00			1.00	1.00	1.00			1.00	1.00	1.00			1.00	1.00	1.00		
MLF Adj:	1.00	1.00	1.00			1.00	1.00	1.00			1.00	1.00	1.00			1.00	1.00	1.00		
FinalVolume:	7	81	0			0	285	344			72	0	7			0	0	0		
Saturation Flow Module:																				
Adjustment:	1.00	1.00	1.00			1.00	1.00	1.00			1.00	1.00	1.00			1.00	1.00	1.00		
Lanes:	0.08	0.92	0.00			0.00	0.45	0.55			0.91	0.00	0.09			0.00	0.00	0.00		
Final Sat.:	59	680	0			0	417	503			549	0	53			0	0	0		
Capacity Analysis Module:																				
Vol/Sat:	0.12	0.12	xxxx	xxxx		0.68	0.68	0.13	xxxx		0.13	xxxx	xxxx			xxxx				
Crit Moves:	****					****		****												
Delay/Veh:	8.3	8.3	0.0	0.0		14.7	14.7	9.1	0.0		9.1	0.0	0.0			0.0				
Delay Adj:	1.00	1.00	1.00	1.00		1.00	1.00	1.00	1.00		1.00	1.00	1.00			1.00				
AdjDel/Veh:	8.3	8.3	0.0	0.0		14.7	14.7	9.1	0.0		9.1	0.0	0.0			0.0				
LOS by Move:	A	A	*	*		B	B	A	*		A	*	*			*				
ApproachDel:	8.3					14.7		9.1			xxxxxx									
Delay Adj:	1.00					1.00		1.00			xxxxx									
ApprAdjDel:	8.3					14.7		9.1			xxxxxx									
LOS by Appr:	A					B		A			*									
AllWayAvgQ:	0.1	0.1	0.1	2.0		2.0	2.0	0.1	0.1		0.1	0.0	0.0			0.0				

Overlook Parkway Extension
Future Alt 4
PM Peak Hour

Note: Queue reported is the number of cars per lane.

Overlook Parkway Extension
Future Alt 4
PM Peak Hour

Level Of Service Computation Report
2000 HCM 4-Way Stop Method (Future Volume Alternative)

Intersection #24 Hawarden Dr/Overlook Pkwy

Cycle (sec): 100 Critical Vol./Cap.(X): 1.101
Loss Time (sec): 0 (Y+R=4.0 sec) Average Delay (sec/veh): 80.3
Optimal Cycle: 0 Level Of Service: F

Street Name:	Hawarden Dr									Overlook Pkwy					
Approach:	North Bound			South Bound			East Bound			West Bound					
Movement:	L	-	T	-	R	L	-	T	-	R	L	-	T	-	R
Control:	Stop Sign			Stop Sign			Stop Sign			Stop Sign					
Rights:	Include			Include			Include			Include					
Min. Green:	7	7	7	7	7	7	7	7	7	7	7	7			
Lanes:	0	0	1!	0	0	0	0	1!	0	0	1	0	1	1	0	1	0	1	1	0
Volume Module:															
Base Vol:	45	6	5	105	40	186	39	1039	49	2	1022	28			
Growth Adj:	1.00	1.00	1.00	1.00	1.00	1.00	1.00	1.00	1.00	1.00	1.00	1.00			
Initial Bse:	45	6	5	105	40	186	39	1039	49	2	1022	28			
Added Vol:	0	0	0	0	0	0	0	0	0	0	0	0			
PasserByVol:	0	0	0	0	0	0	0	0	0	0	0	0			
Initial Fut:	45	6	5	105	40	186	39	1039	49	2	1022	28			
User Adj:	1.00	1.00	1.00	1.00	1.00	1.00	1.00	1.00	1.00	1.00	1.00	1.00			
PHF Adj:	1.00	1.00	1.00	1.00	1.00	1.00	1.00	1.00	1.00	1.00	1.00	1.00			
PHF Volume:	45	6	5	105	40	186	39	1039	49	2	1022	28			
Reduct Vol:	0	0	0	0	0	0	0	0	0	0	0	0			
Reduced Vol:	45	6	5	105	40	186	39	1039	49	2	1022	28			
PCE Adj:	1.00	1.00	1.00	1.00	1.00	1.00	1.00	1.00	1.00	1.00	1.00	1.00			
MLF Adj:	1.00	1.00	1.00	1.00	1.00	1.00	1.00	1.00	1.00	1.00	1.00	1.00			
FinalVolume:	45	6	5	105	40	186	39	1039	49	2	1022	28			
Saturation Flow Module:															
Adjustment:	1.00	1.00	1.00	1.00	1.00	1.00	1.00	1.00	1.00	1.00	1.00	1.00			
Lanes:	0.80	0.11	0.09	0.32	0.12	0.56	1.00	1.91	0.09	1.00	1.95	0.05			
Final Sat.:	328	44	36	165	63	293	461	944	45	457	953	26			
Capacity Analysis Module:															
Vol/Sat:	0.14	0.14	0.14	0.63	0.63	0.63	0.08	1.10	1.10	0.00	1.07	1.07			
Crit Moves:		****			****			****			****				
Delay/Veh:	12.6	12.6	12.6	20.9	20.9	20.9	11.2	96.9	95.1	10.6	88.2	87.2			
Delay Adj:	1.00	1.00	1.00	1.00	1.00	1.00	1.00	1.00	1.00	1.00	1.00	1.00			
AdjDel/Veh:	12.6	12.6	12.6	20.9	20.9	20.9	11.2	96.9	95.1	10.6	88.2	87.2			
LOS by Move:	B	B	B	C	C	C	B	F	F	B	F	F			
ApproachDel:	12.6			20.9			93.8			88.0					
Delay Adj:	1.00			1.00			1.00			1.00					
ApprAdjDel:	12.6			20.9			93.8			88.0					
LOS by Appr:	B			C			F			F					
AllWayAvgQ:	0.1	0.1	0.1	1.6	1.6	1.6	0.1	12.1	11.7	0.0	10.7	10.5			

Overlook Parkway Extension
Future Alt 4
PM Peak Hour

Note: Queue reported is the number of cars per lane.

Overlook Parkway Extension
Future Alt 4
PM Peak Hour

Level Of Service Computation Report
2000 HCM 4-Way Stop Method (Future Volume Alternative)

Intersection #25 Crystal View Ter/Berry Rd

Cycle (sec): 100 Critical Vol./Cap.(X): 0.465
Loss Time (sec): 0 (Y+R=4.0 sec) Average Delay (sec/veh): 11.0
Optimal Cycle: 0 Level Of Service: B

Street Name:	Crystal View Ter							Berry Rd					
Approach:	North Bound			South Bound			East Bound			West Bound			
Movement:	L	- T	- R	L	- T	- R	L	- T	- R	L	- T	- R	
Control:	Stop Sign			Stop Sign			Stop Sign			Stop Sign			
Rights:	Include			Include			Include			Include			
Min. Green:	7	7	7	7	7	7	7	7	7	7	7	7	
Lanes:	0 0	1! 0	0	0 0	1! 0	0	0 0	1! 0	0	0 0	1! 0	0	
Volume Module:													
Base Vol:	1	6	161	223	55	2	1	0	7	262	8	47	
Growth Adj:	1.00	1.00	1.00	1.00	1.00	1.00	1.00	1.00	1.00	1.00	1.00	1.00	
Initial Bse:	1	6	161	223	55	2	1	0	7	262	8	47	
Added Vol:	0	0	0	0	0	0	0	0	0	0	0	0	
PasserByVol:	0	0	0	0	0	0	0	0	0	0	0	0	
Initial Fut:	1	6	161	223	55	2	1	0	7	262	8	47	
User Adj:	1.00	1.00	1.00	1.00	1.00	1.00	1.00	1.00	1.00	1.00	1.00	1.00	
PHF Adj:	1.00	1.00	1.00	1.00	1.00	1.00	1.00	1.00	1.00	1.00	1.00	1.00	
PHF Volume:	1	6	161	223	55	2	1	0	7	262	8	47	
Reduct Vol:	0	0	0	0	0	0	0	0	0	0	0	0	
Reduced Vol:	1	6	161	223	55	2	1	0	7	262	8	47	
PCE Adj:	1.00	1.00	1.00	1.00	1.00	1.00	1.00	1.00	1.00	1.00	1.00	1.00	
MLF Adj:	1.00	1.00	1.00	1.00	1.00	1.00	1.00	1.00	1.00	1.00	1.00	1.00	
FinalVolume:	1	6	161	223	55	2	1	0	7	262	8	47	
Saturation Flow Module:													
Adjustment:	1.00	1.00	1.00	1.00	1.00	1.00	1.00	1.00	1.00	1.00	1.00	1.00	
Lanes:	0.01	0.03	0.96	0.79	0.20	0.01	0.12	0.00	0.88	0.83	0.02	0.15	
Final Sat.:	4	27	711	540	133	5	81	0	564	564	17	101	
Capacity Analysis Module:													
Vol/Sat:	0.23	0.23	0.23	0.41	0.41	0.41	0.01	xxxx	0.01	0.46	0.46	0.46	
Crit Moves:		****		****			****			****			
Delay/Veh:	8.7	8.7	8.7	11.4	11.4	11.4	8.0	0.0	8.0	12.0	12.0	12.0	
Delay Adj:	1.00	1.00	1.00	1.00	1.00	1.00	1.00	1.00	1.00	1.00	1.00	1.00	
AdjDel/Veh:	8.7	8.7	8.7	11.4	11.4	11.4	8.0	0.0	8.0	12.0	12.0	12.0	
LOS by Move:	A	A	A	B	B	B	A	*	A	B	B	B	
ApproachDel:	8.7			11.4			8.0			12.0			
Delay Adj:	1.00			1.00			1.00			1.00			
ApprAdjDel:	8.7			11.4			8.0			12.0			
LOS by Appr:	A			B			A			B			
AllWayAvgQ:	0.3	0.3	0.3	0.6	0.6	0.6	0.0	0.0	0.0	0.8	0.8	0.8	

Overlook Parkway Extension
Future Alt 4
PM Peak Hour

Note: Queue reported is the number of cars per lane.

Overlook Parkway Extension
Future Alt 4
PM Peak Hour

Level Of Service Computation Report
2000 HCM 4-Way Stop Method (Future Volume Alternative)

Intersection #26 Corinthian Wy/Berry Rd

Cycle (sec): 100 Critical Vol./Cap.(X): 0.521
Loss Time (sec): 0 (Y+R=4.0 sec) Average Delay (sec/veh): 11.3
Optimal Cycle: 0 Level Of Service: B

Street Name:	Corinthian Wy						Berry Rd					
Approach:	North Bound			South Bound			East Bound			West Bound		
Movement:	L -	T -	R	L -	T -	R	L -	T -	R	L -	T -	R
Control:	Stop Sign			Stop Sign			Stop Sign			Stop Sign		
Rights:	Include			Include			Include			Include		
Min. Green:	7	7	7	7	7	7	7	7	7	7	7	7
Lanes:	0 0	0 0	0	0 0	1! 0	0	0 1	0 0	0	0 0	0 1	0
Volume Module:												
Base Vol:	0	0	0	47	0	274	126	255	0	0	54	3
Growth Adj:	1.00	1.00	1.00	1.00	1.00	1.00	1.00	1.00	1.00	1.00	1.00	1.00
Initial Bse:	0	0	0	47	0	274	126	255	0	0	54	3
Added Vol:	0	0	0	0	0	0	0	0	0	0	0	0
PasserByVol:	0	0	0	0	0	0	0	0	0	0	0	0
Initial Fut:	0	0	0	47	0	274	126	255	0	0	54	3
User Adj:	1.00	1.00	1.00	1.00	1.00	1.00	1.00	1.00	1.00	1.00	1.00	1.00
PHF Adj:	1.00	1.00	1.00	1.00	1.00	1.00	1.00	1.00	1.00	1.00	1.00	1.00
PHF Volume:	0	0	0	47	0	274	126	255	0	0	54	3
Reduct Vol:	0	0	0	0	0	0	0	0	0	0	0	0
Reduced Vol:	0	0	0	47	0	274	126	255	0	0	54	3
PCE Adj:	1.00	1.00	1.00	1.00	1.00	1.00	1.00	1.00	1.00	1.00	1.00	1.00
MLF Adj:	1.00	1.00	1.00	1.00	1.00	1.00	1.00	1.00	1.00	1.00	1.00	1.00
FinalVolume:	0	0	0	47	0	274	126	255	0	0	54	3
Saturation Flow Module:												
Adjustment:	1.00	1.00	1.00	1.00	1.00	1.00	1.00	1.00	1.00	1.00	1.00	1.00
Lanes:	0.00	0.00	0.00	0.15	0.00	0.85	0.33	0.67	0.00	0.00	0.95	0.05
Final Sat.:	0	0	0	112	0	655	242	489	0	0	628	35
Capacity Analysis Module:												
Vol/Sat:	xxxx	xxxx	xxxx	0.42	xxxx	0.42	0.52	0.52	xxxx	xxxx	0.09	0.09
Crit Moves:				****				****			****	
Delay/Veh:	0.0	0.0	0.0	10.3	0.0	10.3	12.5	12.5	0.0	0.0	8.5	8.5
Delay Adj:	1.00	1.00	1.00	1.00	1.00	1.00	1.00	1.00	1.00	1.00	1.00	1.00
AdjDel/Veh:	0.0	0.0	0.0	10.3	0.0	10.3	12.5	12.5	0.0	0.0	8.5	8.5
LOS by Move:	*	*	*	B	*	B	B	B	*	*	A	A
ApproachDel:	xxxxxx			10.3			12.5			8.5		
Delay Adj:	xxxxx			1.00			1.00			1.00		
ApprAdjDel:	xxxxxx			10.3			12.5			8.5		
LOS by Appr:	*			B			B			A		
AllWayAvgQ:	0.0	0.0	0.0	0.6	0.6	0.6	1.0	1.0	1.0	0.1	0.1	0.1

Overlook Parkway Extension
Future Alt 4
PM Peak Hour

Note: Queue reported is the number of cars per lane.

Overlook Parkway Extension
Future Alt 4
PM Peak Hour

Level Of Service Computation Report
2000 HCM Unsignalized Method (Future Volume Alternative)

Intersection #28 Orozco Dr/Overlook Pkwy

Average Delay (sec/veh): 138.7 Worst Case Level Of Service: F[1418.4]

Street Name:	Orozco Dr						Overlook Pkwy					
Approach:	North Bound			South Bound			East Bound			West Bound		
Movement:	L	- T	- R	L	- T	- R	L	- T	- R	L	- T	- R
Control:	Stop Sign			Stop Sign			Uncontrolled			Uncontrolled		
Rights:	Include			Include			Include			Include		
Lanes:	0 0	1! 0	0	0 0	1! 0	0	1 0	1 1	0	1 0	1 1	0
Volume Module:												
Base Vol:	10	1	2	209	8	27	29	1108	10	0	1058	45
Growth Adj:	1.00	1.00	1.00	1.00	1.00	1.00	1.00	1.00	1.00	1.00	1.00	1.00
Initial Bse:	10	1	2	209	8	27	29	1108	10	0	1058	45
Added Vol:	0	0	0	0	0	0	0	0	0	0	0	0
PasserByVol:	0	0	0	0	0	0	0	0	0	0	0	0
Initial Fut:	10	1	2	209	8	27	29	1108	10	0	1058	45
User Adj:	1.00	1.00	1.00	1.00	1.00	1.00	1.00	1.00	1.00	1.00	1.00	1.00
PHF Adj:	1.00	1.00	1.00	1.00	1.00	1.00	1.00	1.00	1.00	1.00	1.00	1.00
PHF Volume:	10	1	2	209	8	27	29	1108	10	0	1058	45
Reduct Vol:	0	0	0	0	0	0	0	0	0	0	0	0
FinalVolume:	10	1	2	209	8	27	29	1108	10	0	1058	45
Critical Gap Module:												
Critical Gp:	7.5	6.5	6.9	7.5	6.5	6.9	4.1	xxxx	xxxxx	xxxxx	xxxx	xxxxx
FollowUpTim:	3.5	4.0	3.3	3.5	4.0	3.3	2.2	xxxx	xxxxx	xxxxx	xxxx	xxxxx
Capacity Module:												
Cnflict Vol:	1704	2274	559	1693	2257	552	1103	xxxx	xxxxx	xxxx	xxxx	xxxxx
Potent Cap.:	60	41	478	62	42	483	640	xxxx	xxxxx	xxxx	xxxx	xxxxx
Move Cap.:	47	39	478	58	40	483	640	xxxx	xxxxx	xxxx	xxxx	xxxxx
Volume/Cap:	0.21	0.03	0.00	3.60	0.20	0.06	0.05	xxxx	xxxx	xxxx	xxxx	xxxx
Level Of Service Module:												
2Way95thQ:	xxxx	xxxx	xxxxx	xxxx	xxxx	xxxxx	0.1	xxxx	xxxxx	xxxx	xxxx	xxxxx
Control Del:	xxxxx	xxxx	xxxxx	xxxxx	xxxx	xxxxx	10.9	xxxx	xxxxx	xxxxx	xxxx	xxxxx
LOS by Move:	*	*	*	*	*	*	B	*	*	*	*	*
Movement:	LT -	LTR -	RT	LT -	LTR -	RT	LT -	LTR -	RT	LT -	LTR -	RT
Shared Cap.:	xxxx	53	xxxxx	xxxx	63	xxxxx	xxxx	xxxx	xxxxx	xxxx	xxxx	xxxxx
SharedQueue:	xxxxx	0.8	xxxxx	xxxxx	26.1	xxxxx	xxxxx	xxxx	xxxxx	xxxxx	xxxx	xxxxx
Shrd ConDel:	xxxxx	93.2	xxxxx	xxxxx	1418	xxxxx	xxxxx	xxxx	xxxxx	xxxxx	xxxx	xxxxx
Shared LOS:	*	F	*	*	F	*	*	*	*	*	*	*
ApproachDel:	93.2			1418.4			xxxxxx			xxxxxx		
ApproachLOS:	F			F			*			*		

Note: Queue reported is the number of cars per lane.

Overlook Parkway Extension
Future Alt 4
PM Peak Hour

Level Of Service Computation Report
2000 HCM 4-Way Stop Method (Future Volume Alternative)

Intersection #51 Madison St/Victoria Ave (North)

Cycle (sec): 100 Critical Vol./Cap.(X): 1.412
Loss Time (sec): 0 (Y+R=4.0 sec) Average Delay (sec/veh): 178.5
Optimal Cycle: 0 Level Of Service: F

Street Name:	Madison St						Victoria Ave (North)					
Approach:	North Bound			South Bound			East Bound			West Bound		
Movement:	L	- T	- R	L	- T	- R	L	- T	- R	L	- T	- R
Control:	Stop Sign			Stop Sign			Stop Sign			Stop Sign		
Rights:	Include			Include			Include			Include		
Min. Green:	7	7	7	7	7	7	7	7	7	7	7	7
Lanes:	0 1	1 0	0	0 0	1 1	0	0 0	0 0	0	0 1	0 0	1
Volume Module:												
Base Vol:	264	1101	0	0	1515	62	0	0	0	12	53	17
Growth Adj:	1.00	1.00	1.00	1.00	1.00	1.00	1.00	1.00	1.00	1.00	1.00	1.00
Initial Bse:	264	1101	0	0	1515	62	0	0	0	12	53	17
Added Vol:	0	0	0	0	0	0	0	0	0	0	0	0
PasserByVol:	0	0	0	0	0	0	0	0	0	0	0	0
Initial Fut:	264	1101	0	0	1515	62	0	0	0	12	53	17
User Adj:	1.00	1.00	1.00	1.00	1.00	1.00	1.00	1.00	1.00	1.00	1.00	1.00
PHF Adj:	1.00	1.00	1.00	1.00	1.00	1.00	1.00	1.00	1.00	1.00	1.00	1.00
PHF Volume:	264	1101	0	0	1515	62	0	0	0	12	53	17
Reduct Vol:	0	0	0	0	0	0	0	0	0	0	0	0
Reduced Vol:	264	1101	0	0	1515	62	0	0	0	12	53	17
PCE Adj:	1.00	1.00	1.00	1.00	1.00	1.00	1.00	1.00	1.00	1.00	1.00	1.00
MLF Adj:	1.00	1.00	1.00	1.00	1.00	1.00	1.00	1.00	1.00	1.00	1.00	1.00
FinalVolume:	264	1101	0	0	1515	62	0	0	0	12	53	17
Saturation Flow Module:												
Adjustment:	1.00	1.00	1.00	1.00	1.00	1.00	1.00	1.00	1.00	1.00	1.00	1.00
Lanes:	0.39	1.61	0.00	0.00	1.92	0.08	0.00	0.00	0.00	0.18	0.82	1.00
Final Sat.:	209	887	0	0	1073	44	0	0	0	75	333	447
Capacity Analysis Module:												
Vol/Sat:	1.26	1.24	xxxx	xxxx	1.41	1.41	xxxx	xxxx	xxxx	0.16	0.16	0.04
Crit Moves:	****				****						****	
Delay/Veh:	154.4	145	0.0	0.0	215	211.9	0.0	0.0	0.0	13.2	13.2	11.1
Delay Adj:	1.00	1.00	1.00	1.00	1.00	1.00	1.00	1.00	1.00	1.00	1.00	1.00
AdjDel/Veh:	154.4	145	0.0	0.0	215	211.9	0.0	0.0	0.0	13.2	13.2	11.1
LOS by Move:	F	F	*	*	F	F	*	*	*	B	B	B
ApproachDel:	146.8			214.6			xxxxxx			12.7		
Delay Adj:	1.00			1.00			xxxxx			1.00		
ApprAdjDel:	146.8			214.6			xxxxxx			12.7		
LOS by Appr:	F			F			*			B		
AllWayAvgQ:	21.8	20.1	0.0	0.0	32.1	31.6	0.0	0.0	0.0	0.2	0.2	0.0

Overlook Parkway Extension
Future Alt 4
PM Peak Hour

Note: Queue reported is the number of cars per lane.

Overlook Parkway Extension
Future Alt 4
PM Peak Hour

Level Of Service Computation Report
2000 HCM 4-Way Stop Method (Future Volume Alternative)

Intersection #52 Madison St/Victoria Ave (South)

Cycle (sec): 100 | Critical Vol./Cap.(X): 1.587
Loss Time (sec): 0 (Y+R=4.0 sec) | Average Delay (sec/veh): 223.1
Optimal Cycle: 0 | Level Of Service: F

Street Name:	Madison St						Victoria Ave (South)					
Approach:	North Bound			South Bound			East Bound			West Bound		
Movement:	L	T	R	L	T	R	L	T	R	L	T	R
Control:	Stop Sign			Stop Sign			Stop Sign			Stop Sign		
Rights:	Include			Include			Include			Include		
Min. Green:	7	7	7	7	7	7	7	7	7	7	7	7
Lanes:	0 0	1 1	0	0 1	1 0	0	0 0	1! 0	0	0 0	0 0	0
Volume Module:												
Base Vol:	0	1290	71	58	1469	0	75	117	288	0	0	0
Growth Adj:	1.00	1.00	1.00	1.00	1.00	1.00	1.00	1.00	1.00	1.00	1.00	1.00
Initial Bse:	0	1290	71	58	1469	0	75	117	288	0	0	0
Added Vol:	0	0	0	0	0	0	0	0	0	0	0	0
PasserByVol:	0	0	0	0	0	0	0	0	0	0	0	0
Initial Fut:	0	1290	71	58	1469	0	75	117	288	0	0	0
User Adj:	1.00	1.00	1.00	1.00	1.00	1.00	1.00	1.00	1.00	1.00	1.00	1.00
PHF Adj:	1.00	1.00	1.00	1.00	1.00	1.00	1.00	1.00	1.00	1.00	1.00	1.00
PHF Volume:	0	1290	71	58	1469	0	75	117	288	0	0	0
Reduct Vol:	0	0	0	0	0	0	0	0	0	0	0	0
Reduced Vol:	0	1290	71	58	1469	0	75	117	288	0	0	0
PCE Adj:	1.00	1.00	1.00	1.00	1.00	1.00	1.00	1.00	1.00	1.00	1.00	1.00
MLF Adj:	1.00	1.00	1.00	1.00	1.00	1.00	1.00	1.00	1.00	1.00	1.00	1.00
FinalVolume:	0	1290	71	58	1469	0	75	117	288	0	0	0
Saturation Flow Module:												
Adjustment:	1.00	1.00	1.00	1.00	1.00	1.00	1.00	1.00	1.00	1.00	1.00	1.00
Lanes:	0.00	1.90	0.10	0.08	1.92	0.00	0.16	0.24	0.60	0.00	0.00	0.00
Final Sat.:	0	922	51	37	928	0	87	136	336	0	0	0
Capacity Analysis Module:												
Vol/Sat:	xxxx	1.40	1.39	1.59	1.58	xxxx	0.86	0.86	0.86	xxxx	xxxx	xxxx
Crit Moves:		****		****			****					
Delay/Veh:	0.0	213	209.8	292.7	291	0.0	36.6	36.6	36.6	0.0	0.0	0.0
Delay Adj:	1.00	1.00	1.00	1.00	1.00	1.00	1.00	1.00	1.00	1.00	1.00	1.00
AdjDel/Veh:	0.0	213	209.8	292.7	291	0.0	36.6	36.6	36.6	0.0	0.0	0.0
LOS by Move:	*	F	F	F	F	*	E	E	E	*	*	*
ApproachDel:	212.8			290.9			36.6			xxxxxx		
Delay Adj:	1.00			1.00			1.00			xxxxx		
ApprAdjDel:	212.8			290.9			36.6			xxxxxx		
LOS by Appr:	F			F			E			*		
AllWayAvgQ:	0.0	27.7	27.1	37.7	37.5	0.0	4.2	4.2	4.2	0.0	0.0	0.0

Overlook Parkway Extension
Future Alt 4
PM Peak Hour

Note: Queue reported is the number of cars per lane.

Overlook Parkway Extension
Future Alt 4
PM Peak Hour

Level Of Service Computation Report
2000 HCM 4-Way Stop Method (Future Volume Alternative)

Intersection #81 Washington St/Victoria Ave (North)

Cycle (sec): 100 Critical Vol./Cap.(X): 1.079
Loss Time (sec): 0 (Y+R=4.0 sec) Average Delay (sec/veh): 59.3
Optimal Cycle: 0 Level Of Service: F

Street Name:	Washington St						Victoria Ave (North)					
Approach:	North Bound			South Bound			East Bound			West Bound		
Movement:	L -	T -	R	L -	T -	R	L -	T -	R	L -	T -	R
Control:	Stop Sign			Stop Sign			Stop Sign			Stop Sign		
Rights:	Include			Include			Include			Include		
Min. Green:	7	7	7	7	7	7	7	7	7	7	7	7
Lanes:	0 1	1 0	0	0 0	0 1	0	0 0	0 0	0	1 0	0 1	0
Volume Module:												
Base Vol:	28	520	0	0	515	1	0	0	0	504	47	40
Growth Adj:	1.00	1.00	1.00	1.00	1.00	1.00	1.00	1.00	1.00	1.00	1.00	1.00
Initial Bse:	28	520	0	0	515	1	0	0	0	504	47	40
Added Vol:	0	0	0	0	0	0	0	0	0	0	0	0
PasserByVol:	0	0	0	0	0	0	0	0	0	0	0	0
Initial Fut:	28	520	0	0	515	1	0	0	0	504	47	40
User Adj:	1.00	1.00	1.00	1.00	1.00	1.00	1.00	1.00	1.00	1.00	1.00	1.00
PHF Adj:	1.00	1.00	1.00	1.00	1.00	1.00	1.00	1.00	1.00	1.00	1.00	1.00
PHF Volume:	28	520	0	0	515	1	0	0	0	504	47	40
Reduct Vol:	0	0	0	0	0	0	0	0	0	0	0	0
Reduced Vol:	28	520	0	0	515	1	0	0	0	504	47	40
PCE Adj:	1.00	1.00	1.00	1.00	1.00	1.00	1.00	1.00	1.00	1.00	1.00	1.00
MLF Adj:	1.00	1.00	1.00	1.00	1.00	1.00	1.00	1.00	1.00	1.00	1.00	1.00
FinalVolume:	28	520	0	0	515	1	0	0	0	504	47	40
Saturation Flow Module:												
Adjustment:	1.00	1.00	1.00	1.00	1.00	1.00	1.00	1.00	1.00	1.00	1.00	1.00
Lanes:	0.10	1.90	0.00	0.00	0.99	0.01	0.00	0.00	0.00	1.00	0.54	0.46
Final Sat.:	49	911	0	0	496	1	0	0	0	467	282	240
Capacity Analysis Module:												
Vol/Sat:	0.57	0.57	xxxx	xxxx	1.04	1.04	xxxx	xxxx	xxxx	1.08	0.17	0.17
Crit Moves:	****				****					****		
Delay/Veh:	19.8	19.7	0.0	0.0	77.8	77.8	0.0	0.0	0.0	91.7	11.0	11.0
Delay Adj:	1.00	1.00	1.00	1.00	1.00	1.00	1.00	1.00	1.00	1.00	1.00	1.00
AdjDel/Veh:	19.8	19.7	0.0	0.0	77.8	77.8	0.0	0.0	0.0	91.7	11.0	11.0
LOS by Move:	C	C	*	*	F	F	*	*	*	F	B	B
ApproachDel:	19.7			77.8			xxxxxx			79.8		
Delay Adj:	1.00			1.00			xxxxx			1.00		
ApprAdjDel:	19.7			77.8			xxxxxx			79.8		
LOS by Appr:	C			F			*			F		
AllWayAvgQ:	1.3	1.3	0.0	9.3	9.3	9.3	0.0	0.0	0.0	10.6	0.2	0.2

Overlook Parkway Extension
Future Alt 4
PM Peak Hour

Note: Queue reported is the number of cars per lane.

Overlook Parkway Extension
Future Alt 4
PM Peak Hour

Level Of Service Computation Report
2000 HCM 4-Way Stop Method (Future Volume Alternative)

Intersection #82 Washington St/Victoria Ave (South)

Cycle (sec):	100	Critical Vol./Cap.(X):	1.719
Loss Time (sec):	0 (Y+R=4.0 sec)	Average Delay (sec/veh):	169.5
Optimal Cycle:	0	Level Of Service:	F

Street Name:	Washington St							Victoria Ave (South)							
Approach:	North Bound				South Bound				East Bound				West Bound		
Movement:	L	-	T	-	R	L	-	T	-	R	L	-	T	-	R	L	-	T	-	R
Control:	Stop Sign					Stop Sign					Stop Sign					Stop Sign				
Rights:	Include					Include					Include					Include				
Min. Green:	7	7	7			7	7	7			7	7	7			7	7	7		
Lanes:	0	0	2	0	1	0	1	0	0	0	0	1	0	0	1	0	0	0	0	0
Volume Module:																				
Base Vol:	0	545	374			7	1012				0	3	129	107		0	0	0		
Growth Adj:	1.00	1.00	1.00			1.00	1.00	1.00			1.00	1.00	1.00	1.00		1.00	1.00	1.00		
Initial Bse:	0	545	374			7	1012				0	3	129	107		0	0	0		
Added Vol:	0	0	0			0	0	0			0	0	0	0		0	0	0		
PasserByVol:	0	0	0			0	0	0			0	0	0	0		0	0	0		
Initial Fut:	0	545	374			7	1012				0	3	129	107		0	0	0		
User Adj:	1.00	1.00	1.00			1.00	1.00	1.00			1.00	1.00	1.00	1.00		1.00	1.00	1.00		
PHF Adj:	1.00	1.00	1.00			1.00	1.00	1.00			1.00	1.00	1.00	1.00		1.00	1.00	1.00		
PHF Volume:	0	545	374			7	1012				0	3	129	107		0	0	0		
Reduct Vol:	0	0	0			0	0	0			0	0	0	0		0	0	0		
Reduced Vol:	0	545	374			7	1012				0	3	129	107		0	0	0		
PCE Adj:	1.00	1.00	1.00			1.00	1.00	1.00			1.00	1.00	1.00	1.00		1.00	1.00	1.00		
MLF Adj:	1.00	1.00	1.00			1.00	1.00	1.00			1.00	1.00	1.00	1.00		1.00	1.00	1.00		
FinalVolume:	0	545	374			7	1012				0	3	129	107		0	0	0		
Saturation Flow Module:																				
Adjustment:	1.00	1.00	1.00			1.00	1.00	1.00			1.00	1.00	1.00	1.00		1.00	1.00	1.00		
Lanes:	0.00	2.00	1.00			0.01	0.99	0.00			0.02	0.98	1.00	0.00		0.00	0.00	0.00		
Final Sat.:	0	1184	671			4	589				0	11	458	515		0	0	0		
Capacity Analysis Module:																				
Vol/Sat:	xxxx	0.46	0.56			1.72	1.72	xxxx			0.28	0.28	0.21			xxxx	xxxx	xxxx		
Crit Moves:			****			****					****									
Delay/Veh:	0.0	13.7	14.4			346.7	347	0.0			12.9	12.9	11.1			0.0	0.0	0.0		
Delay Adj:	1.00	1.00	1.00			1.00	1.00	1.00			1.00	1.00	1.00			1.00	1.00	1.00		
AdjDel/Veh:	0.0	13.7	14.4			346.7	347	0.0			12.9	12.9	11.1			0.0	0.0	0.0		
LOS by Move:	*	B	B			F	F	*			B	B	B			*	*	*		
ApproachDel:	14.0					346.7					12.1					xxxxxx				
Delay Adj:	1.00					1.00					1.00					xxxxx				
ApprAdjDel:	14.0					346.7					12.1					xxxxxx				
LOS by Appr:	B					F					B					*				
AllWayAvgQ:	0.0	0.8	1.2			55.6	55.6	55.6			0.4	0.4	0.2			0.0	0.0	0.0		

Overlook Parkway Extension
Future Alt 4
PM Peak Hour

Note: Queue reported is the number of cars per lane.

Overlook Parkway Extension
Future Alt 4
PM Peak Hour

Level Of Service Computation Report
2000 HCM 4-Way Stop Method (Future Volume Alternative)

Intersection #221 Mary St/Victoria Ave (North)

Cycle (sec): 100 Critical Vol./Cap.(X): 1.138
Loss Time (sec): 0 (Y+R=4.0 sec) Average Delay (sec/veh): 54.6
Optimal Cycle: 0 Level Of Service: F

Street Name:	Mary St						Victoria Ave (North)					
Approach:	North Bound			South Bound			East Bound			West Bound		
Movement:	L -	T -	R	L -	T -	R	L -	T -	R	L -	T -	R
Control:	Stop Sign			Stop Sign			Stop Sign			Stop Sign		
Rights:	Include			Include			Include			Include		
Min. Green:	7	7	7	7	7	7	7	7	7	7	7	7
Lanes:	0 1	0 0	0	0 0	1 0	1	0 0	0 0	0	0 0	1! 0	0
Volume Module:												
Base Vol:	10	396	0	0	594	370	0	0	0	162	240	88
Growth Adj:	1.00	1.00	1.00	1.00	1.00	1.00	1.00	1.00	1.00	1.00	1.00	1.00
Initial Bse:	10	396	0	0	594	370	0	0	0	162	240	88
Added Vol:	0	0	0	0	0	0	0	0	0	0	0	0
PasserByVol:	0	0	0	0	0	0	0	0	0	0	0	0
Initial Fut:	10	396	0	0	594	370	0	0	0	162	240	88
User Adj:	1.00	1.00	1.00	1.00	1.00	1.00	1.00	1.00	1.00	1.00	1.00	1.00
PHF Adj:	1.00	1.00	1.00	1.00	1.00	1.00	1.00	1.00	1.00	1.00	1.00	1.00
PHF Volume:	10	396	0	0	594	370	0	0	0	162	240	88
Reduct Vol:	0	0	0	0	0	0	0	0	0	0	0	0
Reduced Vol:	10	396	0	0	594	370	0	0	0	162	240	88
PCE Adj:	1.00	1.00	1.00	1.00	1.00	1.00	1.00	1.00	1.00	1.00	1.00	1.00
MLF Adj:	1.00	1.00	1.00	1.00	1.00	1.00	1.00	1.00	1.00	1.00	1.00	1.00
FinalVolume:	10	396	0	0	594	370	0	0	0	162	240	88
Saturation Flow Module:												
Adjustment:	1.00	1.00	1.00	1.00	1.00	1.00	1.00	1.00	1.00	1.00	1.00	1.00
Lanes:	0.02	0.98	0.00	0.00	1.00	1.00	0.00	0.00	0.00	0.33	0.49	0.18
Final Sat.:	13	519	0	0	522	581	0	0	0	183	272	100
Capacity Analysis Module:												
Vol/Sat:	0.76	0.76	xxxx	xxxx	1.14	0.64	xxxx	xxxx	xxxx	0.88	0.88	0.88
Crit Moves:		****			****							****
Delay/Veh:	27.4	27.4	0.0	0.0	108	19.1	0.0	0.0	0.0	39.6	39.6	39.6
Delay Adj:	1.00	1.00	1.00	1.00	1.00	1.00	1.00	1.00	1.00	1.00	1.00	1.00
AdjDel/Veh:	27.4	27.4	0.0	0.0	108	19.1	0.0	0.0	0.0	39.6	39.6	39.6
LOS by Move:	D	D	*	*	F	C	*	*	*	E	E	E
ApproachDel:	27.4			73.6			xxxxxx			39.6		
Delay Adj:	1.00			1.00			xxxxx			1.00		
ApprAdjDel:	27.4			73.6			xxxxxx			39.6		
LOS by Appr:	D			F			*			E		
AllWayAvgQ:	2.6	2.6	2.6	0.0	14.2	1.6	0.0	0.0	0.0	4.6	4.6	4.6

Overlook Parkway Extension
Future Alt 4
PM Peak Hour

Note: Queue reported is the number of cars per lane.

Overlook Parkway Extension
Future Alt 4
PM Peak Hour

Level Of Service Computation Report
2000 HCM 4-Way Stop Method (Future Volume Alternative)

Intersection #222 Mary St/Victoria Ave (South)

Cycle (sec): 100 Critical Vol./Cap.(X): 1.202
Loss Time (sec): 0 (Y+R=4.0 sec) Average Delay (sec/veh): 70.9
Optimal Cycle: 0 Level Of Service: F

Street Name:	Mary St						Victoria Ave (South)					
Approach:	North Bound			South Bound			East Bound			West Bound		
Movement:	L -	T -	R	L -	T -	R	L -	T -	R	L -	T -	R
Control:	Stop Sign			Stop Sign			Stop Sign			Stop Sign		
Rights:	Include			Include			Include			Include		
Min. Green:	7	7	7	7	7	7	7	7	7	7	7	7
Lanes:	0 0	0 1	0	0 1	0 0	0	1 0	0 1	0	0 0	0 0	0
Volume Module:												
Base Vol:	0	203	43	114	642	0	203	260	41	0	0	0
Growth Adj:	1.00	1.00	1.00	1.00	1.00	1.00	1.00	1.00	1.00	1.00	1.00	1.00
Initial Bse:	0	203	43	114	642	0	203	260	41	0	0	0
Added Vol:	0	0	0	0	0	0	0	0	0	0	0	0
PasserByVol:	0	0	0	0	0	0	0	0	0	0	0	0
Initial Fut:	0	203	43	114	642	0	203	260	41	0	0	0
User Adj:	1.00	1.00	1.00	1.00	1.00	1.00	1.00	1.00	1.00	1.00	1.00	1.00
PHF Adj:	1.00	1.00	1.00	1.00	1.00	1.00	1.00	1.00	1.00	1.00	1.00	1.00
PHF Volume:	0	203	43	114	642	0	203	260	41	0	0	0
Reduct Vol:	0	0	0	0	0	0	0	0	0	0	0	0
Reduced Vol:	0	203	43	114	642	0	203	260	41	0	0	0
PCE Adj:	1.00	1.00	1.00	1.00	1.00	1.00	1.00	1.00	1.00	1.00	1.00	1.00
MLF Adj:	1.00	1.00	1.00	1.00	1.00	1.00	1.00	1.00	1.00	1.00	1.00	1.00
FinalVolume:	0	203	43	114	642	0	203	260	41	0	0	0
Saturation Flow Module:												
Adjustment:	1.00	1.00	1.00	1.00	1.00	1.00	1.00	1.00	1.00	1.00	1.00	1.00
Lanes:	0.00	0.83	0.17	0.15	0.85	0.00	1.00	0.86	0.14	0.00	0.00	0.00
Final Sat.:	0	474	100	95	534	0	495	465	73	0	0	0
Capacity Analysis Module:												
Vol/Sat:	xxxx	0.43	0.43	1.20	1.20	xxxx	0.41	0.56	0.56	xxxx	xxxx	xxxx
Crit Moves:		****		****				****				
Delay/Veh:	0.0	13.6	13.6	126.0	126	0.0	14.8	17.3	17.3	0.0	0.0	0.0
Delay Adj:	1.00	1.00	1.00	1.00	1.00	1.00	1.00	1.00	1.00	1.00	1.00	1.00
AdjDel/Veh:	0.0	13.6	13.6	126.0	126	0.0	14.8	17.3	17.3	0.0	0.0	0.0
LOS by Move:	*	B	B	F	F	*	B	C	C	*	*	*
ApproachDel:		13.6			126.0			16.3			xxxxxx	
Delay Adj:		1.00			1.00			1.00			xxxxx	
ApprAdjDel:		13.6			126.0			16.3			xxxxxx	
LOS by Appr:		B			F			C			*	
AllWayAvgQ:	0.7	0.7	0.7	20.5	20.5	20.5	0.7	1.2	1.2	0.0	0.0	0.0

Overlook Parkway Extension
Future Alt 4
PM Peak Hour

Note: Queue reported is the number of cars per lane.

APPENDIX C:
TRAFFIX WORKSHEETS
EXISTING CONDITIONS – GATES CLOSED
MITIGATION SCENARIO 2 (2011 GATES CLOSED)

Overlook Parkway Extension
Existing
AM Peak Hour

Level Of Service Computation Report
2000 HCM Operations Method (Future Volume Alternative)

Intersection #8 Washington St/Victoria Ave

Cycle (sec): 100 | Critical Vol./Cap.(X): 0.709
Loss Time (sec): 16 (Y+R=4.0 sec) | Average Delay (sec/veh): 36.8
Optimal Cycle: 70 | Level Of Service: D

Street Name:	Washington St						Victoria Ave					
Approach:	North Bound			South Bound			East Bound			West Bound		
Movement:	L - T - R			L - T - R			L - T - R			L - T - R		
Control:	Split Phase			Split Phase			Split Phase			Split Phase		
Rights:	Include			Include			Include			Include		
Min. Green:	7	7	7	7	7	7	7	7	7	7	7	7
Lanes:	0 1	1 0	1	0 0	1! 0	0	0 0	1! 0	0	1 0	0 1	0
Volume Module:												
Base Vol:	165	432	362	17	120	11	12	213	62	132	223	31
Growth Adj:	1.00	1.00	1.00	1.00	1.00	1.00	1.00	1.00	1.00	1.00	1.00	1.00
Initial Bse:	165	432	362	17	120	11	12	213	62	132	223	31
Added Vol:	0	0	0	0	0	0	0	0	0	0	0	0
PasserByVol:	0	0	0	0	0	0	0	0	0	0	0	0
Initial Fut:	165	432	362	17	120	11	12	213	62	132	223	31
User Adj:	1.00	1.00	1.00	1.00	1.00	1.00	1.00	1.00	1.00	1.00	1.00	1.00
PHF Adj:	1.00	1.00	1.00	1.00	1.00	1.00	1.00	1.00	1.00	1.00	1.00	1.00
PHF Volume:	165	432	362	17	120	11	12	213	62	132	223	31
Reduct Vol:	0	0	0	0	0	0	0	0	0	0	0	0
Reduced Vol:	165	432	362	17	120	11	12	213	62	132	223	31
PCE Adj:	1.00	1.00	1.00	1.00	1.00	1.00	1.00	1.00	1.00	1.00	1.00	1.00
MLF Adj:	1.00	1.00	1.00	1.00	1.00	1.00	1.00	1.00	1.00	1.00	1.00	1.00
FinalVolume:	165	432	362	17	120	11	12	213	62	132	223	31
Saturation Flow Module:												
Sat/Lane:	1900	1900	1900	1900	1900	1900	1900	1900	1900	1900	1900	1900
Adjustment:	0.94	0.94	0.85	0.98	0.98	0.98	0.97	0.97	0.97	0.95	0.98	0.98
Lanes:	0.55	1.45	1.00	0.11	0.82	0.07	0.04	0.74	0.22	1.00	0.88	0.12
Final Sat.:	984	2576	1615	215	1516	139	77	1366	398	1805	1638	228
Capacity Analysis Module:												
Vol/Sat:	0.17	0.17	0.22	0.08	0.08	0.08	0.16	0.16	0.16	0.07	0.14	0.14
Crit Moves:			****		****			****			****	
Green/Cycle:	0.32	0.32	0.32	0.11	0.11	0.11	0.22	0.22	0.22	0.19	0.19	0.19
Volume/Cap:	0.53	0.53	0.71	0.71	0.71	0.71	0.71	0.71	0.71	0.38	0.71	0.71
Delay/Veh:	28.6	28.6	34.7	53.6	53.6	53.6	41.8	41.8	41.8	35.9	44.2	44.2
User DelAdj:	1.00	1.00	1.00	1.00	1.00	1.00	1.00	1.00	1.00	1.00	1.00	1.00
AdjDel/Veh:	28.6	28.6	34.7	53.6	53.6	53.6	41.8	41.8	41.8	35.9	44.2	44.2
LOS by Move:	C	C	C	D	D	D	D	D	D	D	D	D
HCM2kAvgQ:	8	8	11	6	6	6	9	9	9	4	9	9

Note: Queue reported is the number of cars per lane.

Overlook Parkway Extension
Existing
PM Peak Hour

Level Of Service Computation Report
2000 HCM Operations Method (Future Volume Alternative)

Intersection #8 Washington St/Victoria Ave

Cycle (sec): 100 | Critical Vol./Cap.(X): 0.789
Loss Time (sec): 16 (Y+R=4.0 sec) | Average Delay (sec/veh): 45.8
Optimal Cycle: 84 | Level Of Service: D

Street Name:	Washington St						Victoria Ave					
Approach:	North Bound			South Bound			East Bound			West Bound		
Movement:	L - T - R			L - T - R			L - T - R			L - T - R		
Control:	Split Phase			Split Phase			Split Phase			Split Phase		
Rights:	Include			Include			Include			Include		
Min. Green:	7	7	7	7	7	7	7	7	7	7	7	7
Lanes:	0 1	1 0	1	0 0	1! 0	0	0 0	1! 0	0	1 0	0 1	0
Volume Module:												
Base Vol:	89	223	153	3	293	5	5	207	217	301	172	20
Growth Adj:	1.00	1.00	1.00	1.00	1.00	1.00	1.00	1.00	1.00	1.00	1.00	1.00
Initial Bse:	89	223	153	3	293	5	5	207	217	301	172	20
Added Vol:	0	0	0	0	0	0	0	0	0	0	0	0
PasserByVol:	0	0	0	0	0	0	0	0	0	0	0	0
Initial Fut:	89	223	153	3	293	5	5	207	217	301	172	20
User Adj:	1.00	1.00	1.00	1.00	1.00	1.00	1.00	1.00	1.00	1.00	1.00	1.00
PHF Adj:	1.00	1.00	1.00	1.00	1.00	1.00	1.00	1.00	1.00	1.00	1.00	1.00
PHF Volume:	89	223	153	3	293	5	5	207	217	301	172	20
Reduct Vol:	0	0	0	0	0	0	0	0	0	0	0	0
Reduced Vol:	89	223	153	3	293	5	5	207	217	301	172	20
PCE Adj:	1.00	1.00	1.00	1.00	1.00	1.00	1.00	1.00	1.00	1.00	1.00	1.00
MLF Adj:	1.00	1.00	1.00	1.00	1.00	1.00	1.00	1.00	1.00	1.00	1.00	1.00
FinalVolume:	89	223	153	3	293	5	5	207	217	301	172	20
Saturation Flow Module:												
Sat/Lane:	1900	1900	1900	1900	1900	1900	1900	1900	1900	1900	1900	1900
Adjustment:	0.94	0.94	0.85	1.00	1.00	1.00	0.93	0.93	0.93	0.95	0.98	0.98
Lanes:	0.57	1.43	1.00	0.01	0.97	0.02	0.01	0.48	0.51	1.00	0.90	0.10
Final Sat.:	1015	2544	1615	19	1846	31	21	854	895	1805	1675	195
Capacity Analysis Module:												
Vol/Sat:	0.09	0.09	0.09	0.16	0.16	0.16	0.24	0.24	0.24	0.17	0.10	0.10
Crit Moves:				****	****				****	****		
Green/Cycle:	0.12	0.12	0.12	0.20	0.20	0.20	0.31	0.31	0.31	0.21	0.21	0.21
Volume/Cap:	0.73	0.73	0.79	0.79	0.79	0.79	0.79	0.79	0.79	0.79	0.49	0.49
Delay/Veh:	48.7	48.7	62.0	48.5	48.5	48.5	39.3	39.3	39.3	47.9	35.6	35.6
User DelAdj:	1.00	1.00	1.00	1.00	1.00	1.00	1.00	1.00	1.00	1.00	1.00	1.00
AdjDel/Veh:	48.7	48.7	62.0	48.5	48.5	48.5	39.3	39.3	39.3	47.9	35.6	35.6
LOS by Move:	D	D	E	D	D	D	D	D	D	D	D	D
HCM2kAvgQ:	7	7	7	11	11	11	14	14	14	11	6	6

Note: Queue reported is the number of cars per lane.

APPENDIX C:
TRAFFIX WORKSHEETS
EXISTING CONDITIONS – GATES OPEN
MITIGATION SCENARIO 3 (2011 GATES CLOSED)


```
MITIG8 - Ex Open + Alt3 AM Fri Apr 6, 2012 11:58:44                  Page 1-1
-------------------------------------------------------------------------------
                          Overlook Parkway Extension
                                Ex Open + Alt3
                                 AM Peak Hour
-------------------------------------------------------------------------------
                     Level Of Service Computation Report
           2000 HCM Operations Method (Future Volume Alternative)
*******************************************************************************
Intersection #14 Alessandro Blvd/Overlook Pkwy
*******************************************************************************
Cycle (sec):         100                Critical Vol./Cap.(X):         0.779
Loss Time (sec):      16 (Y+R=4.0 sec)  Average Delay (sec/veh):        24.8
Optimal Cycle:        82                Level Of Service:                 C
*******************************************************************************
Street Name:         Alessandro Blvd                   Overlook Pkwy
Approach:      North Bound      South Bound       East Bound       West Bound
Movement:     L  -  T  -  R    L  -  T  -  R    L  -  T  -  R    L  -  T  -  R
------------|---------------||---------------||---------------||---------------|
Control:        Protected        Protected       Split Phase      Split Phase
Rights:            Ovl              Ovl              Ovl             Include
Min. Green:     7    7     7     7    7     7     7    7     7     7    7     7
Lanes:        1  0  3  0  1    1  0  3  0  1    0  1  0  0  2    3  0  0  1  0
------------|---------------||---------------||---------------||---------------|
Volume Module:
Base Vol:     331 2549   851     4  887    78    92   39   158   248  155    13
Growth Adj:  1.00 1.00  1.00  1.00 1.00  1.00  1.00 1.00  1.00  1.00 1.00  1.00
Initial Bse:  331 2549   851     4  887    78    92   39   158   248  155    13
Added Vol:      0    0     0     0    0     0     0    0     0     0    0     0
PasserByVol:    0    0     0     0    0     0     0    0     0     0    0     0
Initial Fut:  331 2549   851     4  887    78    92   39   158   248  155    13
User Adj:    1.00 1.00  1.00  1.00 1.00  1.00  1.00 1.00  1.00  1.00 1.00  1.00
PHF Adj:     1.00 1.00  1.00  1.00 1.00  1.00  1.00 1.00  1.00  1.00 1.00  1.00
PHF Volume:   331 2549   851     4  887    78    92   39   158   248  155    13
Reduct Vol:     0    0     0     0    0     0     0    0     0     0    0     0
Reduced Vol:  331 2549   851     4  887    78    92   39   158   248  155    13
PCE Adj:     1.00 1.00  1.00  1.00 1.00  1.00  1.00 1.00  1.00  1.00 1.00  1.00
MLF Adj:     1.00 1.00  1.00  1.00 1.00  1.00  1.00 1.00  1.00  1.00 1.00  1.00
FinalVolume:  331 2549   851     4  887    78    92   39   158   248  155    13
------------|---------------||---------------||---------------||---------------|
Saturation Flow Module:
Sat/Lane:    1900 1900  1900  1900 1900  1900  1900 1900  1900  1900 1900  1900
Adjustment:  0.95 0.91  0.85  0.95 0.91  0.85  0.97 0.97  0.75  0.92 0.99  0.99
Lanes:       1.00 3.00  1.00  1.00 3.00  1.00  0.70 0.30  2.00  3.00 0.92  0.08
Final Sat.:  1805 5187  1615  1805 5187  1615  1289  546  2842  5253 1732   145
------------|---------------||---------------||---------------||---------------|
Capacity Analysis Module:
Vol/Sat:     0.18 0.49  0.53  0.00 0.17  0.05  0.07 0.07  0.06  0.05 0.09  0.09
Crit Moves:        ****         ****                  ****                    ****
Green/Cycle: 0.34 0.58  0.69  0.07 0.31  0.40  0.08 0.08  0.42  0.11 0.11  0.11
Volume/Cap:  0.55 0.85  0.77  0.03 0.55  0.12  0.85 0.85  0.13  0.45 0.85  0.85
Delay/Veh:   28.0 19.8  13.8  43.4 28.8  19.1  78.1 78.1  17.8  42.6 71.1  71.1
User DelAdj: 1.00 1.00  1.00  1.00 1.00  1.00  1.00 1.00  1.00  1.00 1.00  1.00
AdjDel/Veh:  28.0 19.8  13.8  43.4 28.8  19.1  78.1 78.1  17.8  42.6 71.1  71.1
LOS by Move:   C    B     B     D    C     B     E    E     B     D    E     E
HCM2kAvgQ:      9   26    19     0    9     2     6    6     2     3    8     8
*******************************************************************************
Note: Queue reported is the number of cars per lane.

  Traffix 7.9.0415 (c) 2007 Dowling Assoc. Licensed to MMA, LONG BEACH, CA
```

```
MITIG8 - Ex Open + Alt3 PM Fri Apr 6, 2012 11:59:36                  Page 1-1
--------------------------------------------------------------------------------
                           Overlook Parkway Extension
                                 Ex Open + Alt3
                                  PM Peak Hour
--------------------------------------------------------------------------------
                      Level Of Service Computation Report
             2000 HCM Operations Method (Future Volume Alternative)
********************************************************************************
Intersection #14 Alessandro Blvd/Overlook Pkwy
********************************************************************************
Cycle (sec):         100                Critical Vol./Cap.(X):         0.959
Loss Time (sec):      16 (Y+R=4.0 sec)  Average Delay (sec/veh):        38.8
Optimal Cycle:       130                Level Of Service:                  D
********************************************************************************
Street Name:         Alessandro Blvd                    Overlook Pkwy
Approach:      North Bound      South Bound       East Bound       West Bound
Movement:     L  -  T  -  R    L  -  T  -  R    L  -  T  -  R    L  -  T  -  R
------------|---------------||---------------||---------------||---------------|
Control:        Protected        Protected       Split Phase      Split Phase
Rights:            Ovl              Ovl              Ovl             Include
Min. Green:     7    7     7     7    7     7     7    7     7     7    7     7
Lanes:        1  0  3  0  1    1  0  3  0  1    0  1  0  0  2    3  0  0  1  0
------------|---------------||---------------||---------------||---------------|
Volume Module:
Base Vol:     225 1106   405    14 2472   158    47   74   628   567  164     6
Growth Adj:  1.00 1.00  1.00  1.00 1.00  1.00  1.00 1.00  1.00  1.00 1.00  1.00
Initial Bse:  225 1106   405    14 2472   158    47   74   628   567  164     6
Added Vol:      0    0     0     0    0     0     0    0     0     0    0     0
PasserByVol:    0    0     0     0    0     0     0    0     0     0    0     0
Initial Fut:  225 1106   405    14 2472   158    47   74   628   567  164     6
User Adj:    1.00 1.00  1.00  1.00 1.00  1.00  1.00 1.00  1.00  1.00 1.00  1.00
PHF Adj:     1.00 1.00  1.00  1.00 1.00  1.00  1.00 1.00  1.00  1.00 1.00  1.00
PHF Volume:   225 1106   405    14 2472   158    47   74   628   567  164     6
Reduct Vol:     0    0     0     0    0     0     0    0     0     0    0     0
Reduced Vol:  225 1106   405    14 2472   158    47   74   628   567  164     6
PCE Adj:     1.00 1.00  1.00  1.00 1.00  1.00  1.00 1.00  1.00  1.00 1.00  1.00
MLF Adj:     1.00 1.00  1.00  1.00 1.00  1.00  1.00 1.00  1.00  1.00 1.00  1.00
FinalVolume:  225 1106   405    14 2472   158    47   74   628   567  164     6
------------|---------------||---------------||---------------||---------------|
Saturation Flow Module:
Sat/Lane:    1900 1900  1900  1900 1900  1900  1900 1900  1900  1900 1900  1900
Adjustment:  0.95 0.91  0.85  0.95 0.91  0.85  0.98 0.98  0.75  0.92 1.00  1.00
Lanes:       1.00 3.00  1.00  1.00 3.00  1.00  0.39 0.61  2.00  3.00 0.96  0.04
Final Sat.:  1805 5187  1615  1805 5187  1615   724 1140  2842  5253 1824    67
------------|---------------||---------------||---------------||---------------|
Capacity Analysis Module:
Vol/Sat:     0.12 0.21  0.25  0.01 0.48  0.10  0.06 0.06  0.22  0.11 0.09  0.09
Crit Moves:  ****                 ****                    ****  ****
Green/Cycle: 0.13 0.47  0.58  0.15 0.50  0.60  0.10 0.10  0.23  0.11 0.11  0.11
Volume/Cap:  0.96 0.45  0.43  0.05 0.96  0.16  0.65 0.65  0.96  0.96 0.80  0.80
Delay/Veh:   90.4 17.8  11.8  36.1 34.1   9.1  50.9 50.9  63.3  71.1 62.1  62.1
User DelAdj: 1.00 1.00  1.00  1.00 1.00  1.00  1.00 1.00  1.00  1.00 1.00  1.00
AdjDel/Veh:  90.4 17.8  11.8  36.1 34.1   9.1  50.9 50.9  63.3  71.1 62.1  62.1
LOS by Move:   F    B     B     D    C     A     D    D     E     E    E     E
HCM2kAvgQ:    11    8     7     0   33     2     5    5    16    10    7     7
********************************************************************************
Note: Queue reported is the number of cars per lane.

  Traffix 7.9.0415 (c) 2007 Dowling Assoc. Licensed to MMA, LONG BEACH, CA
```


APPENDIX C:
TRAFFIX WORKSHEETS
EXISTING CONDITIONS – GATES CLOSED
MITIGATION SCENARIO 4 (2011 GATES CLOSED)

Overlook Parkway Extension
Ex Open + Alt4A
AM Peak Hour

Level Of Service Computation Report
2000 HCM Operations Method (Future Volume Alternative)

Intersection #5 Madison St/Victoria Ave

Cycle (sec): 100 | Critical Vol./Cap.(X): 0.722
Loss Time (sec): 16 (Y+R=4.0 sec) | Average Delay (sec/veh): 36.8
Optimal Cycle: 72 | Level Of Service: D

Street Name:	Madison St						Victoria Ave					
Approach:	North Bound			South Bound			East Bound			West Bound		
Movement:	L -	T -	R	L -	T -	R	L -	T -	R	L -	T -	R
Control:	Split Phase			Split Phase			Split Phase			Split Phase		
Rights:	Include			Include			Include			Include		
Min. Green:	7	7	7	7	7	7	7	7	7	7	7	7
Lanes:	0 1	0 1	0	0 1	0 1	0	0 1	0 0	1	0 1	0 0	1
Volume Module:												
Base Vol:	413	466	28	4	226	17	62	138	294	18	165	20
Growth Adj:	1.00	1.00	1.00	1.00	1.00	1.00	1.00	1.00	1.00	1.00	1.00	1.00
Initial Bse:	413	466	28	4	226	17	62	138	294	18	165	20
Added Vol:	0	0	0	0	0	0	0	0	0	0	0	0
PasserByVol:	0	0	0	0	0	0	0	0	0	0	0	0
Initial Fut:	413	466	28	4	226	17	62	138	294	18	165	20
User Adj:	1.00	1.00	1.00	1.00	1.00	1.00	1.00	1.00	1.00	1.00	1.00	1.00
PHF Adj:	1.00	1.00	1.00	1.00	1.00	1.00	1.00	1.00	1.00	1.00	1.00	1.00
PHF Volume:	413	466	28	4	226	17	62	138	294	18	165	20
Reduct Vol:	0	0	0	0	0	0	0	0	0	0	0	0
Reduced Vol:	413	466	28	4	226	17	62	138	294	18	165	20
PCE Adj:	1.00	1.00	1.00	1.00	1.00	1.00	1.00	1.00	1.00	1.00	1.00	1.00
MLF Adj:	1.00	1.00	1.00	1.00	1.00	1.00	1.00	1.00	1.00	1.00	1.00	1.00
FinalVolume:	413	466	28	4	226	17	62	138	294	18	165	20
Saturation Flow Module:												
Sat/Lane:	1900	1900	1900	1900	1900	1900	1900	1900	1900	1900	1900	1900
Adjustment:	0.92	0.92	0.92	0.94	0.94	0.94	0.99	0.99	0.85	1.00	1.00	0.85
Lanes:	0.91	1.03	0.06	0.03	1.83	0.14	0.31	0.69	1.00	0.10	0.90	1.00
Final Sat.:	1600	1805	108	58	3267	246	580	1291	1615	186	1705	1615
Capacity Analysis Module:												
Vol/Sat:	0.26	0.26	0.26	0.07	0.07	0.07	0.11	0.11	0.18	0.10	0.10	0.01
Crit Moves:			****		****				****		****	
Green/Cycle:	0.36	0.36	0.36	0.10	0.10	0.10	0.25	0.25	0.25	0.13	0.13	0.13
Volume/Cap:	0.72	0.72	0.72	0.72	0.72	0.72	0.42	0.42	0.72	0.72	0.72	0.09
Delay/Veh:	29.9	29.9	29.9	51.3	51.3	51.3	31.9	31.9	40.4	51.2	51.2	38.1
User DelAdj:	1.00	1.00	1.00	1.00	1.00	1.00	1.00	1.00	1.00	1.00	1.00	1.00
AdjDel/Veh:	29.9	29.9	29.9	51.3	51.3	51.3	31.9	31.9	40.4	51.2	51.2	38.1
LOS by Move:	C	C	C	D	D	D	C	C	D	D	D	D
HCM2kAvgQ:	14	14	14	5	5	5	5	5	10	7	7	1

Note: Queue reported is the number of cars per lane.

Traffix 7.9.0415 (c) 2007 Dowling Assoc. Licensed to MMA, LONG BEACH, CA

Overlook Parkway Extension
Ex Open + Alt4A
AM Peak Hour

Level Of Service Computation Report
2000 HCM Operations Method (Future Volume Alternative)

Intersection #14 Alessandro Blvd/Overlook Pkwy

Cycle (sec): 100 | Critical Vol./Cap.(X): 0.741
Loss Time (sec): 16 (Y+R=4.0 sec) | Average Delay (sec/veh): 25.5
Optimal Cycle: 75 | Level Of Service: C

Street Name:	Alessandro Blvd						Overlook Pkwy					
Approach:	North Bound			South Bound			East Bound			West Bound		
Movement:	L -	T -	R	L -	T -	R	L -	T -	R	L -	T -	R
Control:	Protected			Protected			Split Phase			Split Phase		
Rights:	Ovl			Ovl			Ovl			Include		
Min. Green:	7	7	7	7	7	7	7	7	7	7	7	7
Lanes:	1 0	3 0	1	1 0	3 0	1	0 1	0 0	2	3 0	0 1	0
Volume Module:												
Base Vol:	560	2380	844	3	826	77	88	39	255	249	167	8
Growth Adj:	1.00	1.00	1.00	1.00	1.00	1.00	1.00	1.00	1.00	1.00	1.00	1.00
Initial Bse:	560	2380	844	3	826	77	88	39	255	249	167	8
Added Vol:	0	0	0	0	0	0	0	0	0	0	0	0
PasserByVol:	0	0	0	0	0	0	0	0	0	0	0	0
Initial Fut:	560	2380	844	3	826	77	88	39	255	249	167	8
User Adj:	1.00	1.00	1.00	1.00	1.00	1.00	1.00	1.00	1.00	1.00	1.00	1.00
PHF Adj:	1.00	1.00	1.00	1.00	1.00	1.00	1.00	1.00	1.00	1.00	1.00	1.00
PHF Volume:	560	2380	844	3	826	77	88	39	255	249	167	8
Reduct Vol:	0	0	0	0	0	0	0	0	0	0	0	0
Reduced Vol:	560	2380	844	3	826	77	88	39	255	249	167	8
PCE Adj:	1.00	1.00	1.00	1.00	1.00	1.00	1.00	1.00	1.00	1.00	1.00	1.00
MLF Adj:	1.00	1.00	1.00	1.00	1.00	1.00	1.00	1.00	1.00	1.00	1.00	1.00
FinalVolume:	560	2380	844	3	826	77	88	39	255	249	167	8
Saturation Flow Module:												
Sat/Lane:	1900	1900	1900	1900	1900	1900	1900	1900	1900	1900	1900	1900
Adjustment:	0.95	0.91	0.85	0.95	0.91	0.85	0.97	0.97	0.75	0.92	0.99	0.99
Lanes:	1.00	3.00	1.00	1.00	3.00	1.00	0.69	0.31	2.00	3.00	0.95	0.05
Final Sat.:	1805	5187	1615	1805	5187	1615	1273	564	2842	5253	1800	86
Capacity Analysis Module:												
Vol/Sat:	0.31	0.46	0.52	0.00	0.16	0.05	0.07	0.07	0.09	0.05	0.09	0.09
Crit Moves:		****		****			****					****
Green/Cycle:	0.42	0.57	0.68	0.07	0.22	0.30	0.09	0.09	0.51	0.12	0.12	0.12
Volume/Cap:	0.73	0.81	0.76	0.02	0.73	0.16	0.81	0.81	0.18	0.41	0.81	0.81
Delay/Veh:	27.9	18.9	13.7	43.4	39.0	25.7	70.3	70.3	13.3	41.6	62.6	62.6
User DelAdj:	1.00	1.00	1.00	1.00	1.00	1.00	1.00	1.00	1.00	1.00	1.00	1.00
AdjDel/Veh:	27.9	18.9	13.7	43.4	39.0	25.7	70.3	70.3	13.3	41.6	62.6	62.6
LOS by Move:	C	B	B	D	D	C	E	E	B	D	E	E
HCM2kAvgQ:	16	23	18	0	10	2	6	6	2	3	7	7

Note: Queue reported is the number of cars per lane.

Traffix 7.9.0415 (c) 2007 Dowling Assoc. Licensed to MMA, LONG BEACH, CA

Overlook Parkway Extension
Ex Open + Alt4A
AM Peak Hour

Level Of Service Computation Report
2000 HCM 4-Way Stop Method (Future Volume Alternative)

Intersection #17 Kingdom Dr/Overlook Pkwy

Cycle (sec): 100 | Critical Vol./Cap.(X): 0.574
Loss Time (sec): 0 (Y+R=4.0 sec) | Average Delay (sec/veh): 12.8
Optimal Cycle: 0 | Level Of Service: B

Street Name:	Kingdom Dr						Overlook Pkwy					
Approach:	North Bound			South Bound			East Bound			West Bound		
Movement:	L -	T -	R	L -	T -	R	L -	T -	R	L -	T -	R
Control:	Stop Sign			Stop Sign			Stop Sign			Stop Sign		
Rights:	Include			Include			Include			Include		
Min. Green:	7	7	7	7	7	7	7	7	7	7	7	7
Lanes:	0 0	1! 0	0	1 0	0 0	0	1 0	1 1	0	1 0	1 1	0
Volume Module:												
Base Vol:	39	0	37	4	0	0	0	341	25	28	803	0
Growth Adj:	1.00	1.00	1.00	1.00	1.00	1.00	1.00	1.00	1.00	1.00	1.00	1.00
Initial Bse:	39	0	37	4	0	0	0	341	25	28	803	0
Added Vol:	0	0	0	0	0	0	0	0	0	0	0	0
PasserByVol:	0	0	0	0	0	0	0	0	0	0	0	0
Initial Fut:	39	0	37	4	0	0	0	341	25	28	803	0
User Adj:	1.00	1.00	1.00	1.00	1.00	1.00	1.00	1.00	1.00	1.00	1.00	1.00
PHF Adj:	1.00	1.00	1.00	1.00	1.00	1.00	1.00	1.00	1.00	1.00	1.00	1.00
PHF Volume:	39	0	37	4	0	0	0	341	25	28	803	0
Reduct Vol:	0	0	0	0	0	0	0	0	0	0	0	0
Reduced Vol:	39	0	37	4	0	0	0	341	25	28	803	0
PCE Adj:	1.00	1.00	1.00	1.00	1.00	1.00	1.00	1.00	1.00	1.00	1.00	1.00
MLF Adj:	1.00	1.00	1.00	1.00	1.00	1.00	1.00	1.00	1.00	1.00	1.00	1.00
FinalVolume:	39	0	37	4	0	0	0	341	25	28	803	0
Saturation Flow Module:												
Adjustment:	1.00	1.00	1.00	1.00	1.00	1.00	1.00	1.00	1.00	1.00	1.00	1.00
Lanes:	0.51	0.00	0.49	1.00	0.00	0.00	1.00	1.86	0.14	1.00	2.00	0.00
Final Sat.:	298	0	283	521	0	0	575	1184	88	636	1400	0
Capacity Analysis Module:												
Vol/Sat:	0.13	xxxx	0.13	0.01	xxxx	xxxx	0.00	0.29	0.29	0.04	0.57	xxxx
Crit Moves:	****			****				****			****	
Delay/Veh:	9.7	0.0	9.7	9.5	0.0	0.0	0.0	10.4	10.3	8.6	14.3	0.0
Delay Adj:	1.00	1.00	1.00	1.00	1.00	1.00	1.00	1.00	1.00	1.00	1.00	1.00
AdjDel/Veh:	9.7	0.0	9.7	9.5	0.0	0.0	0.0	10.4	10.3	8.6	14.3	0.0
LOS by Move:	A	*	A	A	*	*	*	B	B	A	B	*
ApproachDel:	9.7			9.5			10.4			14.1		
Delay Adj:	1.00			1.00			1.00			1.00		
ApprAdjDel:	9.7			9.5			10.4			14.1		
LOS by Appr:	A			A			B			B		
AllWayAvgQ:	0.1	0.1	0.1	0.0	0.0	0.0	0.0	0.4	0.4	0.0	1.3	1.3

Traffix 7.9.0415 (c) 2007 Dowling Assoc. Licensed to MMA, LONG BEACH, CA

Overlook Parkway Extension
Ex Open + Alt4A
AM Peak Hour

Level Of Service Computation Report
2000 HCM 4-Way Stop Method (Future Volume Alternative)

Intersection #28 Orozco Dr/Overlook Pkwy

Cycle (sec): 100 | Critical Vol./Cap.(X): 0.597
Loss Time (sec): 0 (Y+R=4.0 sec) | Average Delay (sec/veh): 13.0
Optimal Cycle: 0 | Level Of Service: B

Street Name:	Orozco Dr						Overlook Pkwy					
Approach:	North Bound			South Bound			East Bound			West Bound		
Movement:	L -	T -	R	L -	T -	R	L -	T -	R	L -	T -	R
Control:	Stop Sign			Stop Sign			Stop Sign			Stop Sign		
Rights:	Include			Include			Include			Include		
Min. Green:	7	7	7	7	7	7	7	7	7	7	7	7
Lanes:	0 0	1! 0	0	0 0	1! 0	0	1 0	1 1	0	1 0	1 1	0
Volume Module:												
Base Vol:	9	2	2	19	1	2	8	305	3	2	830	49
Growth Adj:	1.00	1.00	1.00	1.00	1.00	1.00	1.00	1.00	1.00	1.00	1.00	1.00
Initial Bse:	9	2	2	19	1	2	8	305	3	2	830	49
Added Vol:	0	0	0	0	0	0	0	0	0	0	0	0
PasserByVol:	0	0	0	0	0	0	0	0	0	0	0	0
Initial Fut:	9	2	2	19	1	2	8	305	3	2	830	49
User Adj:	1.00	1.00	1.00	1.00	1.00	1.00	1.00	1.00	1.00	1.00	1.00	1.00
PHF Adj:	1.00	1.00	1.00	1.00	1.00	1.00	1.00	1.00	1.00	1.00	1.00	1.00
PHF Volume:	9	2	2	19	1	2	8	305	3	2	830	49
Reduct Vol:	0	0	0	0	0	0	0	0	0	0	0	0
Reduced Vol:	9	2	2	19	1	2	8	305	3	2	830	49
PCE Adj:	1.00	1.00	1.00	1.00	1.00	1.00	1.00	1.00	1.00	1.00	1.00	1.00
MLF Adj:	1.00	1.00	1.00	1.00	1.00	1.00	1.00	1.00	1.00	1.00	1.00	1.00
FinalVolume:	9	2	2	19	1	2	8	305	3	2	830	49
Saturation Flow Module:												
Adjustment:	1.00	1.00	1.00	1.00	1.00	1.00	1.00	1.00	1.00	1.00	1.00	1.00
Lanes:	0.70	0.15	0.15	0.86	0.05	0.09	1.00	1.98	0.02	1.00	1.89	0.11
Final Sat.:	385	86	86	478	25	50	588	1279	13	662	1390	83
Capacity Analysis Module:												
Vol/Sat:	0.02	0.02	0.02	0.04	0.04	0.04	0.01	0.24	0.24	0.00	0.60	0.59
Crit Moves:	****				****			****			****	
Delay/Veh:	9.2	9.2	9.2	9.3	9.3	9.3	8.7	9.8	9.8	8.1	14.4	14.2
Delay Adj:	1.00	1.00	1.00	1.00	1.00	1.00	1.00	1.00	1.00	1.00	1.00	1.00
AdjDel/Veh:	9.2	9.2	9.2	9.3	9.3	9.3	8.7	9.8	9.8	8.1	14.4	14.2
LOS by Move:	A	A	A	A	A	A	A	A	A	A	B	B
ApproachDel:	9.2			9.3			9.8			14.4		
Delay Adj:	1.00			1.00			1.00			1.00		
ApprAdjDel:	9.2			9.3			9.8			14.4		
LOS by Appr:	A			A			A			B		
AllWayAvgQ:	0.0	0.0	0.0	0.0	0.0	0.0	0.0	0.3	0.3	0.0	1.4	1.4

Traffix 7.9.0415 (c) 2007 Dowling Assoc. Licensed to MMA, LONG BEACH, CA

Overlook Parkway Extension
Ex Open + Alt4A
PM Peak Hour

Level Of Service Computation Report
2000 HCM Operations Method (Future Volume Alternative)

Intersection #5 Madison St/Victoria Ave

Cycle (sec): 100 Critical Vol./Cap.(X): 0.878
Loss Time (sec): 16 (Y+R=4.0 sec) Average Delay (sec/veh): 48.5
Optimal Cycle: 108 Level Of Service: D

Street Name:	Madison St						Victoria Ave					
Approach:	North Bound			South Bound			East Bound			West Bound		
Movement:	L -	T -	R	L -	T -	R	L -	T -	R	L -	T -	R
Control:	Split Phase			Split Phase			Split Phase			Split Phase		
Rights:	Include			Include			Include			Include		
Min. Green:	7	7	7	7	7	7	7	7	7	7	7	7
Lanes:	0 1	0 1	0	0 1	0 1	0	0 1	0 0	1	0 1	0 0	1
Volume Module:												
Base Vol:	383	381	53	17	561	35	46	146	461	11	77	6
Growth Adj:	1.00	1.00	1.00	1.00	1.00	1.00	1.00	1.00	1.00	1.00	1.00	1.00
Initial Bse:	383	381	53	17	561	35	46	146	461	11	77	6
Added Vol:	0	0	0	0	0	0	0	0	0	0	0	0
PasserByVol:	0	0	0	0	0	0	0	0	0	0	0	0
Initial Fut:	383	381	53	17	561	35	46	146	461	11	77	6
User Adj:	1.00	1.00	1.00	1.00	1.00	1.00	1.00	1.00	1.00	1.00	1.00	1.00
PHF Adj:	1.00	1.00	1.00	1.00	1.00	1.00	1.00	1.00	1.00	1.00	1.00	1.00
PHF Volume:	383	381	53	17	561	35	46	146	461	11	77	6
Reduct Vol:	0	0	0	0	0	0	0	0	0	0	0	0
Reduced Vol:	383	381	53	17	561	35	46	146	461	11	77	6
PCE Adj:	1.00	1.00	1.00	1.00	1.00	1.00	1.00	1.00	1.00	1.00	1.00	1.00
MLF Adj:	1.00	1.00	1.00	1.00	1.00	1.00	1.00	1.00	1.00	1.00	1.00	1.00
FinalVolume:	383	381	53	17	561	35	46	146	461	11	77	6
Saturation Flow Module:												
Sat/Lane:	1900	1900	1900	1900	1900	1900	1900	1900	1900	1900	1900	1900
Adjustment:	0.92	0.92	0.92	0.94	0.94	0.94	0.99	0.99	0.85	0.99	0.99	0.85
Lanes:	0.94	0.93	0.13	0.06	1.83	0.11	0.24	0.76	1.00	0.12	0.88	1.00
Final Sat.:	1637	1628	227	99	3271	204	450	1427	1615	236	1653	1615
Capacity Analysis Module:												
Vol/Sat:	0.23	0.23	0.23	0.17	0.17	0.17	0.10	0.10	0.29	0.05	0.05	0.00
Crit Moves:	****			****					****		****	
Green/Cycle:	0.26	0.26	0.26	0.19	0.19	0.19	0.32	0.32	0.32	0.07	0.07	0.07
Volume/Cap:	0.90	0.90	0.90	0.90	0.90	0.90	0.32	0.32	0.90	0.67	0.67	0.05
Delay/Veh:	47.2	47.2	47.2	54.1	54.1	54.1	26.2	26.2	50.9	57.5	57.5	43.6
User DelAdj:	1.00	1.00	1.00	1.00	1.00	1.00	1.00	1.00	1.00	1.00	1.00	1.00
AdjDel/Veh:	47.2	47.2	47.2	54.1	54.1	54.1	26.2	26.2	50.9	57.5	57.5	43.6
LOS by Move:	D	D	D	D	D	D	C	C	D	E	E	D
HCM2kAvgQ:	16	16	16	13	13	13	5	5	17	4	4	0

Note: Queue reported is the number of cars per lane.

Traffix 7.9.0415 (c) 2007 Dowling Assoc. Licensed to MMA, LONG BEACH, CA

Overlook Parkway Extension
Ex Open + Alt4A
PM Peak Hour

Level Of Service Computation Report
2000 HCM Operations Method (Future Volume Alternative)

Intersection #14 Alessandro Blvd/Overlook Pkwy

Cycle (sec): 100 Critical Vol./Cap.(X): 1.001
Loss Time (sec): 16 (Y+R=4.0 sec) Average Delay (sec/veh): 52.9
Optimal Cycle: 130 Level Of Service: D

Street Name:	Alessandro Blvd						Overlook Pkwy					
Approach:	North Bound			South Bound			East Bound			West Bound		
Movement:	L -	T -	R	L -	T -	R	L -	T -	R	L -	T -	R
Control:	Protected			Protected			Split Phase			Split Phase		
Rights:	Ovl			Ovl			Ovl			Include		
Min. Green:	7	7	7	7	7	7	7	7	7	7	7	7
Lanes:	1 0	3 0	1	1 0	3 0	1	0 1	0 0	2	3 0	0 1	0
Volume Module:												
Base Vol:	438	941	429	8	2300	167	32	63	870	545	179	3
Growth Adj:	1.00	1.00	1.00	1.00	1.00	1.00	1.00	1.00	1.00	1.00	1.00	1.00
Initial Bse:	438	941	429	8	2300	167	32	63	870	545	179	3
Added Vol:	0	0	0	0	0	0	0	0	0	0	0	0
PasserByVol:	0	0	0	0	0	0	0	0	0	0	0	0
Initial Fut:	438	941	429	8	2300	167	32	63	870	545	179	3
User Adj:	1.00	1.00	1.00	1.00	1.00	1.00	1.00	1.00	1.00	1.00	1.00	1.00
PHF Adj:	1.00	1.00	1.00	1.00	1.00	1.00	1.00	1.00	1.00	1.00	1.00	1.00
PHF Volume:	438	941	429	8	2300	167	32	63	870	545	179	3
Reduct Vol:	0	0	0	0	0	0	0	0	0	0	0	0
Reduced Vol:	438	941	429	8	2300	167	32	63	870	545	179	3
PCE Adj:	1.00	1.00	1.00	1.00	1.00	1.00	1.00	1.00	1.00	1.00	1.00	1.00
MLF Adj:	1.00	1.00	1.00	1.00	1.00	1.00	1.00	1.00	1.00	1.00	1.00	1.00
FinalVolume:	438	941	429	8	2300	167	32	63	870	545	179	3
Saturation Flow Module:												
Sat/Lane:	1900	1900	1900	1900	1900	1900	1900	1900	1900	1900	1900	1900
Adjustment:	0.95	0.91	0.85	0.95	0.91	0.85	0.98	0.98	0.75	0.92	1.00	1.00
Lanes:	1.00	3.00	1.00	1.00	3.00	1.00	0.34	0.66	2.00	3.00	0.98	0.02
Final Sat.:	1805	5187	1615	1805	5187	1615	629	1239	2842	5253	1865	31
Capacity Analysis Module:												
Vol/Sat:	0.24	0.18	0.27	0.00	0.44	0.10	0.05	0.05	0.31	0.10	0.10	0.10
Crit Moves:	****				****			****		****		
Green/Cycle:	0.24	0.48	0.58	0.19	0.43	0.50	0.07	0.07	0.31	0.10	0.10	0.10
Volume/Cap:	1.03	0.38	0.46	0.02	1.03	0.21	0.73	0.73	1.00	1.03	0.95	0.95
Delay/Veh:	88.5	16.4	12.1	33.3	54.3	13.9	63.9	63.9	64.7	90.7	94.9	94.9
User DelAdj:	1.00	1.00	1.00	1.00	1.00	1.00	1.00	1.00	1.00	1.00	1.00	1.00
AdjDel/Veh:	88.5	16.4	12.1	33.3	54.3	13.9	63.9	63.9	64.7	90.7	94.9	94.9
LOS by Move:	F	B	B	C	D	B	E	E	E	F	F	F
HCM2kAvgQ:	20	7	8	0	35	3	4	4	22	10	9	9

Note: Queue reported is the number of cars per lane.

Traffix 7.9.0415 (c) 2007 Dowling Assoc. Licensed to MMA, LONG BEACH, CA

Overlook Parkway Extension
Ex Open + Alt4A
PM Peak Hour

Level Of Service Computation Report
2000 HCM 4-Way Stop Method (Future Volume Alternative)

Intersection #17 Kingdom Dr/Overlook Pkwy

Cycle (sec): 100 | Critical Vol./Cap.(X): 0.704
Loss Time (sec): 0 (Y+R=4.0 sec) | Average Delay (sec/veh): 18.0
Optimal Cycle: 0 | Level Of Service: C

Street Name:	Kingdom Dr						Overlook Pkwy					
Approach:	North Bound			South Bound			East Bound			West Bound		
Movement:	L -	T -	R	L -	T -	R	L -	T -	R	L -	T -	R
Control:	Stop Sign			Stop Sign			Stop Sign			Stop Sign		
Rights:	Include			Include			Include			Include		
Min. Green:	7	7	7	7	7	7	7	7	7	7	7	7
Lanes:	0 0	1! 0	0	1 0	0 0	0	1 0	1 1	0	1 0	1 1	0
Volume Module:												
Base Vol:	16	0	30	3	0	0	0	888	18	29	760	3
Growth Adj:	1.00	1.00	1.00	1.00	1.00	1.00	1.00	1.00	1.00	1.00	1.00	1.00
Initial Bse:	16	0	30	3	0	0	0	888	18	29	760	3
Added Vol:	0	0	0	0	0	0	0	0	0	0	0	0
PasserByVol:	0	0	0	0	0	0	0	0	0	0	0	0
Initial Fut:	16	0	30	3	0	0	0	888	18	29	760	3
User Adj:	1.00	1.00	1.00	1.00	1.00	1.00	1.00	1.00	1.00	1.00	1.00	1.00
PHF Adj:	1.00	1.00	1.00	1.00	1.00	1.00	1.00	1.00	1.00	1.00	1.00	1.00
PHF Volume:	16	0	30	3	0	0	0	888	18	29	760	3
Reduct Vol:	0	0	0	0	0	0	0	0	0	0	0	0
Reduced Vol:	16	0	30	3	0	0	0	888	18	29	760	3
PCE Adj:	1.00	1.00	1.00	1.00	1.00	1.00	1.00	1.00	1.00	1.00	1.00	1.00
MLF Adj:	1.00	1.00	1.00	1.00	1.00	1.00	1.00	1.00	1.00	1.00	1.00	1.00
FinalVolume:	16	0	30	3	0	0	0	888	18	29	760	3
Saturation Flow Module:												
Adjustment:	1.00	1.00	1.00	1.00	1.00	1.00	1.00	1.00	1.00	1.00	1.00	1.00
Lanes:	0.35	0.00	0.65	1.00	0.00	0.00	1.00	1.96	0.04	1.00	1.99	0.01
Final Sat.:	192	0	361	495	0	0	584	1261	26	567	1242	5
Capacity Analysis Module:												
Vol/Sat:	0.08	xxxx	0.08	0.01	xxxx	xxxx	0.00	0.70	0.70	0.05	0.61	0.61
Crit Moves:	****			****				****			****	
Delay/Veh:	9.8	0.0	9.8	10.0	0.0	0.0	0.0	19.9	19.8	9.2	16.6	16.6
Delay Adj:	1.00	1.00	1.00	1.00	1.00	1.00	1.00	1.00	1.00	1.00	1.00	1.00
AdjDel/Veh:	9.8	0.0	9.8	10.0	0.0	0.0	0.0	19.9	19.8	9.2	16.6	16.6
LOS by Move:	A	*	A	A	*	*	*	C	C	A	C	C
ApproachDel:	9.8			10.0			19.9			16.4		
Delay Adj:	1.00			1.00			1.00			1.00		
ApprAdjDel:	9.8			10.0			19.9			16.4		
LOS by Appr:	A			A			C			C		
AllWayAvgQ:	0.1	0.1	0.1	0.0	0.0	0.0	0.0	2.1	2.1	0.1	1.4	1.4

Overlook Parkway Extension
Ex Open + Alt4A
PM Peak Hour

Level Of Service Computation Report
2000 HCM 4-Way Stop Method (Future Volume Alternative)

Intersection #28 Orozco Dr/Overlook Pkwy

Cycle (sec): 100 | Critical Vol./Cap.(X): 0.665
Loss Time (sec): 0 (Y+R=4.0 sec) | Average Delay (sec/veh): 18.0
Optimal Cycle: 0 | Level Of Service: C

Street Name:	Orozco Dr						Overlook Pkwy					
Approach:	North Bound			South Bound			East Bound			West Bound		
Movement:	L -	T -	R	L -	T -	R	L -	T -	R	L -	T -	R
Control:	Stop Sign			Stop Sign			Stop Sign			Stop Sign		
Rights:	Include			Include			Include			Include		
Min. Green:	7	7	7	7	7	7	7	7	7	7	7	7
Lanes:	0 0	1! 0	0	0 0	1! 0	0	1 0	1 1	0	1 0	1 1	0
Volume Module:												
Base Vol:	8	0	1	42	2	10	11	823	12	0	816	10
Growth Adj:	1.00	1.00	1.00	1.00	1.00	1.00	1.00	1.00	1.00	1.00	1.00	1.00
Initial Bse:	8	0	1	42	2	10	11	823	12	0	816	10
Added Vol:	0	0	0	0	0	0	0	0	0	0	0	0
PasserByVol:	0	0	0	0	0	0	0	0	0	0	0	0
Initial Fut:	8	0	1	42	2	10	11	823	12	0	816	10
User Adj:	1.00	1.00	1.00	1.00	1.00	1.00	1.00	1.00	1.00	1.00	1.00	1.00
PHF Adj:	1.00	1.00	1.00	1.00	1.00	1.00	1.00	1.00	1.00	1.00	1.00	1.00
PHF Volume:	8	0	1	42	2	10	11	823	12	0	816	10
Reduct Vol:	0	0	0	0	0	0	0	0	0	0	0	0
Reduced Vol:	8	0	1	42	2	10	11	823	12	0	816	10
PCE Adj:	1.00	1.00	1.00	1.00	1.00	1.00	1.00	1.00	1.00	1.00	1.00	1.00
MLF Adj:	1.00	1.00	1.00	1.00	1.00	1.00	1.00	1.00	1.00	1.00	1.00	1.00
FinalVolume:	8	0	1	42	2	10	11	823	12	0	816	10
Saturation Flow Module:												
Adjustment:	1.00	1.00	1.00	1.00	1.00	1.00	1.00	1.00	1.00	1.00	1.00	1.00
Lanes:	0.89	0.00	0.11	0.78	0.04	0.18	1.00	1.97	0.03	1.00	1.98	0.02
Final Sat.:	441	0	55	405	19	96	572	1238	18	569	1236	15
Capacity Analysis Module:												
Vol/Sat:	0.02	xxxx	0.02	0.10	0.10	0.10	0.02	0.66	0.66	0.00	0.66	0.66
Crit Moves:	****				****			****			****	
Delay/Veh:	10.0	0.0	10.0	10.4	10.4	10.4	9.0	18.5	18.4	0.0	18.3	18.3
Delay Adj:	1.00	1.00	1.00	1.00	1.00	1.00	1.00	1.00	1.00	1.00	1.00	1.00
AdjDel/Veh:	10.0	0.0	10.0	10.4	10.4	10.4	9.0	18.5	18.4	0.0	18.3	18.3
LOS by Move:	B	*	B	B	B	B	A	C	C	*	C	C
ApproachDel:	10.0			10.4			18.3			18.3		
Delay Adj:	1.00			1.00			1.00			1.00		
ApprAdjDel:	10.0			10.4			18.3			18.3		
LOS by Appr:	B			B			C			C		
AllWayAvgQ:	0.0	0.0	0.0	0.1	0.1	0.1	0.0	1.8	1.8	0.0	1.7	1.7

APPENDIX C:
TRAFFIX WORKSHEETS
EXISTING CONDITIONS – GATES OPEN
MITIGATION SCENARIO 3 (2011 GATES OPEN)


```
MITIG8 - Ex Open + Alt3 AM Fri Apr 6, 2012 11:58:44                    Page 1-1
--------------------------------------------------------------------------------
                          Overlook Parkway Extension
                                Ex Open + Alt3
                                 AM Peak Hour
--------------------------------------------------------------------------------
                     Level Of Service Computation Report
           2000 HCM Operations Method (Future Volume Alternative)
********************************************************************************
Intersection #14 Alessandro Blvd/Overlook Pkwy
********************************************************************************
Cycle (sec):         100                Critical Vol./Cap.(X):         0.779
Loss Time (sec):      16 (Y+R=4.0 sec)  Average Delay (sec/veh):        24.8
Optimal Cycle:        82                Level Of Service:                 C
********************************************************************************
Street Name:         Alessandro Blvd                    Overlook Pkwy
Approach:      North Bound      South Bound       East Bound       West Bound
Movement:     L  -  T  -  R    L  -  T  -  R    L  -  T  -  R    L  -  T  -  R
------------|---------------||---------------||---------------||---------------|
Control:        Protected        Protected       Split Phase      Split Phase
Rights:            Ovl              Ovl              Ovl             Include
Min. Green:     7    7     7     7    7     7     7    7     7     7    7     7
Lanes:        1  0  3  0  1    1  0  3  0  1    0  1  0  0  2    3  0  0  1  0
------------|---------------||---------------||---------------||---------------|
Volume Module:
Base Vol:     331 2549   851     4  887    78    92   39   158   248  155    13
Growth Adj:  1.00 1.00  1.00  1.00 1.00  1.00  1.00 1.00  1.00  1.00 1.00  1.00
Initial Bse:  331 2549   851     4  887    78    92   39   158   248  155    13
Added Vol:      0    0     0     0    0     0     0    0     0     0    0     0
PasserByVol:    0    0     0     0    0     0     0    0     0     0    0     0
Initial Fut:  331 2549   851     4  887    78    92   39   158   248  155    13
User Adj:    1.00 1.00  1.00  1.00 1.00  1.00  1.00 1.00  1.00  1.00 1.00  1.00
PHF Adj:     1.00 1.00  1.00  1.00 1.00  1.00  1.00 1.00  1.00  1.00 1.00  1.00
PHF Volume:   331 2549   851     4  887    78    92   39   158   248  155    13
Reduct Vol:     0    0     0     0    0     0     0    0     0     0    0     0
Reduced Vol:  331 2549   851     4  887    78    92   39   158   248  155    13
PCE Adj:     1.00 1.00  1.00  1.00 1.00  1.00  1.00 1.00  1.00  1.00 1.00  1.00
MLF Adj:     1.00 1.00  1.00  1.00 1.00  1.00  1.00 1.00  1.00  1.00 1.00  1.00
FinalVolume:  331 2549   851     4  887    78    92   39   158   248  155    13
------------|---------------||---------------||---------------||---------------|
Saturation Flow Module:
Sat/Lane:    1900 1900  1900  1900 1900  1900  1900 1900  1900  1900 1900  1900
Adjustment:  0.95 0.91  0.85  0.95 0.91  0.85  0.97 0.97  0.75  0.92 0.99  0.99
Lanes:       1.00 3.00  1.00  1.00 3.00  1.00  0.70 0.30  2.00  3.00 0.92  0.08
Final Sat.:  1805 5187  1615  1805 5187  1615  1289  546  2842  5253 1732   145
------------|---------------||---------------||---------------||---------------|
Capacity Analysis Module:
Vol/Sat:     0.18 0.49  0.53  0.00 0.17  0.05  0.07 0.07  0.06  0.05 0.09  0.09
Crit Moves:        ****         ****                  ****                    ****
Green/Cycle: 0.34 0.58  0.69  0.07 0.31  0.40  0.08 0.08  0.42  0.11 0.11  0.11
Volume/Cap:  0.55 0.85  0.77  0.03 0.55  0.12  0.85 0.85  0.13  0.45 0.85  0.85
Delay/Veh:   28.0 19.8  13.8  43.4 28.8  19.1  78.1 78.1  17.8  42.6 71.1  71.1
User DelAdj: 1.00 1.00  1.00  1.00 1.00  1.00  1.00 1.00  1.00  1.00 1.00  1.00
AdjDel/Veh:  28.0 19.8  13.8  43.4 28.8  19.1  78.1 78.1  17.8  42.6 71.1  71.1
LOS by Move:   C    B     B     D    C     B     E    E     B     D    E     E
HCM2kAvgQ:      9   26    19     0    9     2     6    6     2     3    8     8
********************************************************************************
Note: Queue reported is the number of cars per lane.

  Traffix 7.9.0415 (c) 2007 Dowling Assoc. Licensed to MMA, LONG BEACH, CA
```

```
MITIG8 - Ex Open + Alt3 PM Fri Apr 6, 2012 11:59:36                  Page 1-1
--------------------------------------------------------------------------------
                           Overlook Parkway Extension
                                 Ex Open + Alt3
                                  PM Peak Hour
--------------------------------------------------------------------------------
                      Level Of Service Computation Report
             2000 HCM Operations Method (Future Volume Alternative)
********************************************************************************
Intersection #14 Alessandro Blvd/Overlook Pkwy
********************************************************************************
Cycle (sec):         100                Critical Vol./Cap.(X):         0.959
Loss Time (sec):      16 (Y+R=4.0 sec)  Average Delay (sec/veh):        38.8
Optimal Cycle:       130                Level Of Service:                  D
********************************************************************************
Street Name:         Alessandro Blvd                    Overlook Pkwy
Approach:      North Bound      South Bound       East Bound       West Bound
Movement:     L  -  T  -  R    L  -  T  -  R    L  -  T  -  R    L  -  T  -  R
------------|---------------||---------------||---------------||---------------|
Control:        Protected        Protected       Split Phase      Split Phase
Rights:            Ovl              Ovl              Ovl             Include
Min. Green:     7    7     7     7    7     7     7    7     7     7    7     7
Lanes:        1  0  3  0  1    1  0  3  0  1    0  1  0  0  2    3  0  0  1  0
------------|---------------||---------------||---------------||---------------|
Volume Module:
Base Vol:     225 1106   405    14 2472   158    47   74   628   567  164     6
Growth Adj:  1.00 1.00  1.00  1.00 1.00  1.00  1.00 1.00  1.00  1.00 1.00  1.00
Initial Bse:  225 1106   405    14 2472   158    47   74   628   567  164     6
Added Vol:      0    0     0     0    0     0     0    0     0     0    0     0
PasserByVol:    0    0     0     0    0     0     0    0     0     0    0     0
Initial Fut:  225 1106   405    14 2472   158    47   74   628   567  164     6
User Adj:    1.00 1.00  1.00  1.00 1.00  1.00  1.00 1.00  1.00  1.00 1.00  1.00
PHF Adj:     1.00 1.00  1.00  1.00 1.00  1.00  1.00 1.00  1.00  1.00 1.00  1.00
PHF Volume:   225 1106   405    14 2472   158    47   74   628   567  164     6
Reduct Vol:     0    0     0     0    0     0     0    0     0     0    0     0
Reduced Vol:  225 1106   405    14 2472   158    47   74   628   567  164     6
PCE Adj:     1.00 1.00  1.00  1.00 1.00  1.00  1.00 1.00  1.00  1.00 1.00  1.00
MLF Adj:     1.00 1.00  1.00  1.00 1.00  1.00  1.00 1.00  1.00  1.00 1.00  1.00
FinalVolume:  225 1106   405    14 2472   158    47   74   628   567  164     6
------------|---------------||---------------||---------------||---------------|
Saturation Flow Module:
Sat/Lane:    1900 1900  1900  1900 1900  1900  1900 1900  1900  1900 1900  1900
Adjustment:  0.95 0.91  0.85  0.95 0.91  0.85  0.98 0.98  0.75  0.92 1.00  1.00
Lanes:       1.00 3.00  1.00  1.00 3.00  1.00  0.39 0.61  2.00  3.00 0.96  0.04
Final Sat.:  1805 5187  1615  1805 5187  1615   724 1140  2842  5253 1824    67
------------|---------------||---------------||---------------||---------------|
Capacity Analysis Module:
Vol/Sat:     0.12 0.21  0.25  0.01 0.48  0.10  0.06 0.06  0.22  0.11 0.09  0.09
Crit Moves:  ****                 ****                    ****  ****
Green/Cycle: 0.13 0.47  0.58  0.15 0.50  0.60  0.10 0.10  0.23  0.11 0.11  0.11
Volume/Cap:  0.96 0.45  0.43  0.05 0.96  0.16  0.65 0.65  0.96  0.96 0.80  0.80
Delay/Veh:   90.4 17.8  11.8  36.1 34.1   9.1  50.9 50.9  63.3  71.1 62.1  62.1
User DelAdj: 1.00 1.00  1.00  1.00 1.00  1.00  1.00 1.00  1.00  1.00 1.00  1.00
AdjDel/Veh:  90.4 17.8  11.8  36.1 34.1   9.1  50.9 50.9  63.3  71.1 62.1  62.1
LOS by Move:   F    B     B     D    C     A     D    D     E     E    E     E
HCM2kAvgQ:    11    8     7     0   33     2     5    5    16    10    7     7
********************************************************************************
Note: Queue reported is the number of cars per lane.

  Traffix 7.9.0415 (c) 2007 Dowling Assoc. Licensed to MMA, LONG BEACH, CA
```


APPENDIX C:
TRAFFIX WORKSHEETS
EXISTING CONDITIONS – GATES OPEN
MITIGATION SCENARIO 4 (2011 GATES OPEN)

Overlook Parkway Extension
Ex Open + Alt4A
AM Peak Hour

Level Of Service Computation Report
2000 HCM Operations Method (Future Volume Alternative)

Intersection #5 Madison St/Victoria Ave

Cycle (sec): 100 | Critical Vol./Cap.(X): 0.722
Loss Time (sec): 16 (Y+R=4.0 sec) | Average Delay (sec/veh): 36.8
Optimal Cycle: 72 | Level Of Service: D

Street Name:	Madison St						Victoria Ave					
Approach:	North Bound			South Bound			East Bound			West Bound		
Movement:	L -	T -	R	L -	T -	R	L -	T -	R	L -	T -	R
Control:	Split Phase			Split Phase			Split Phase			Split Phase		
Rights:	Include			Include			Include			Include		
Min. Green:	7	7	7	7	7	7	7	7	7	7	7	7
Lanes:	0 1	0 1	0	0 1	0 1	0	0 1	0 0	1	0 1	0 0	1
Volume Module:												
Base Vol:	413	466	28	4	226	17	62	138	294	18	165	20
Growth Adj:	1.00	1.00	1.00	1.00	1.00	1.00	1.00	1.00	1.00	1.00	1.00	1.00
Initial Bse:	413	466	28	4	226	17	62	138	294	18	165	20
Added Vol:	0	0	0	0	0	0	0	0	0	0	0	0
PasserByVol:	0	0	0	0	0	0	0	0	0	0	0	0
Initial Fut:	413	466	28	4	226	17	62	138	294	18	165	20
User Adj:	1.00	1.00	1.00	1.00	1.00	1.00	1.00	1.00	1.00	1.00	1.00	1.00
PHF Adj:	1.00	1.00	1.00	1.00	1.00	1.00	1.00	1.00	1.00	1.00	1.00	1.00
PHF Volume:	413	466	28	4	226	17	62	138	294	18	165	20
Reduct Vol:	0	0	0	0	0	0	0	0	0	0	0	0
Reduced Vol:	413	466	28	4	226	17	62	138	294	18	165	20
PCE Adj:	1.00	1.00	1.00	1.00	1.00	1.00	1.00	1.00	1.00	1.00	1.00	1.00
MLF Adj:	1.00	1.00	1.00	1.00	1.00	1.00	1.00	1.00	1.00	1.00	1.00	1.00
FinalVolume:	413	466	28	4	226	17	62	138	294	18	165	20
Saturation Flow Module:												
Sat/Lane:	1900	1900	1900	1900	1900	1900	1900	1900	1900	1900	1900	1900
Adjustment:	0.92	0.92	0.92	0.94	0.94	0.94	0.99	0.99	0.85	1.00	1.00	0.85
Lanes:	0.91	1.03	0.06	0.03	1.83	0.14	0.31	0.69	1.00	0.10	0.90	1.00
Final Sat.:	1600	1805	108	58	3267	246	580	1291	1615	186	1705	1615
Capacity Analysis Module:												
Vol/Sat:	0.26	0.26	0.26	0.07	0.07	0.07	0.11	0.11	0.18	0.10	0.10	0.01
Crit Moves:			****		****				****		****	
Green/Cycle:	0.36	0.36	0.36	0.10	0.10	0.10	0.25	0.25	0.25	0.13	0.13	0.13
Volume/Cap:	0.72	0.72	0.72	0.72	0.72	0.72	0.42	0.42	0.72	0.72	0.72	0.09
Delay/Veh:	29.9	29.9	29.9	51.3	51.3	51.3	31.9	31.9	40.4	51.2	51.2	38.1
User DelAdj:	1.00	1.00	1.00	1.00	1.00	1.00	1.00	1.00	1.00	1.00	1.00	1.00
AdjDel/Veh:	29.9	29.9	29.9	51.3	51.3	51.3	31.9	31.9	40.4	51.2	51.2	38.1
LOS by Move:	C	C	C	D	D	D	C	C	D	D	D	D
HCM2kAvgQ:	14	14	14	5	5	5	5	5	10	7	7	1

Note: Queue reported is the number of cars per lane.

Traffix 7.9.0415 (c) 2007 Dowling Assoc. Licensed to MMA, LONG BEACH, CA

Overlook Parkway Extension
Ex Open + Alt4A
AM Peak Hour

Level Of Service Computation Report
2000 HCM Operations Method (Future Volume Alternative)

Intersection #14 Alessandro Blvd/Overlook Pkwy

Cycle (sec): 100 | Critical Vol./Cap.(X): 0.741
Loss Time (sec): 16 (Y+R=4.0 sec) | Average Delay (sec/veh): 25.5
Optimal Cycle: 75 | Level Of Service: C

Street Name:	Alessandro Blvd						Overlook Pkwy					
Approach:	North Bound			South Bound			East Bound			West Bound		
Movement:	L -	T -	R	L -	T -	R	L -	T -	R	L -	T -	R
Control:	Protected			Protected			Split Phase			Split Phase		
Rights:	Ovl			Ovl			Ovl			Include		
Min. Green:	7	7	7	7	7	7	7	7	7	7	7	7
Lanes:	1 0	3 0	1	1 0	3 0	1	0 1	0 0	2	3 0	0 1	0
Volume Module:												
Base Vol:	560	2380	844	3	826	77	88	39	255	249	167	8
Growth Adj:	1.00	1.00	1.00	1.00	1.00	1.00	1.00	1.00	1.00	1.00	1.00	1.00
Initial Bse:	560	2380	844	3	826	77	88	39	255	249	167	8
Added Vol:	0	0	0	0	0	0	0	0	0	0	0	0
PasserByVol:	0	0	0	0	0	0	0	0	0	0	0	0
Initial Fut:	560	2380	844	3	826	77	88	39	255	249	167	8
User Adj:	1.00	1.00	1.00	1.00	1.00	1.00	1.00	1.00	1.00	1.00	1.00	1.00
PHF Adj:	1.00	1.00	1.00	1.00	1.00	1.00	1.00	1.00	1.00	1.00	1.00	1.00
PHF Volume:	560	2380	844	3	826	77	88	39	255	249	167	8
Reduct Vol:	0	0	0	0	0	0	0	0	0	0	0	0
Reduced Vol:	560	2380	844	3	826	77	88	39	255	249	167	8
PCE Adj:	1.00	1.00	1.00	1.00	1.00	1.00	1.00	1.00	1.00	1.00	1.00	1.00
MLF Adj:	1.00	1.00	1.00	1.00	1.00	1.00	1.00	1.00	1.00	1.00	1.00	1.00
FinalVolume:	560	2380	844	3	826	77	88	39	255	249	167	8
Saturation Flow Module:												
Sat/Lane:	1900	1900	1900	1900	1900	1900	1900	1900	1900	1900	1900	1900
Adjustment:	0.95	0.91	0.85	0.95	0.91	0.85	0.97	0.97	0.75	0.92	0.99	0.99
Lanes:	1.00	3.00	1.00	1.00	3.00	1.00	0.69	0.31	2.00	3.00	0.95	0.05
Final Sat.:	1805	5187	1615	1805	5187	1615	1273	564	2842	5253	1800	86
Capacity Analysis Module:												
Vol/Sat:	0.31	0.46	0.52	0.00	0.16	0.05	0.07	0.07	0.09	0.05	0.09	0.09
Crit Moves:		****		****			****					****
Green/Cycle:	0.42	0.57	0.68	0.07	0.22	0.30	0.09	0.09	0.51	0.12	0.12	0.12
Volume/Cap:	0.73	0.81	0.76	0.02	0.73	0.16	0.81	0.81	0.18	0.41	0.81	0.81
Delay/Veh:	27.9	18.9	13.7	43.4	39.0	25.7	70.3	70.3	13.3	41.6	62.6	62.6
User DelAdj:	1.00	1.00	1.00	1.00	1.00	1.00	1.00	1.00	1.00	1.00	1.00	1.00
AdjDel/Veh:	27.9	18.9	13.7	43.4	39.0	25.7	70.3	70.3	13.3	41.6	62.6	62.6
LOS by Move:	C	B	B	D	D	C	E	E	B	D	E	E
HCM2kAvgQ:	16	23	18	0	10	2	6	6	2	3	7	7

Note: Queue reported is the number of cars per lane.

Traffix 7.9.0415 (c) 2007 Dowling Assoc. Licensed to MMA, LONG BEACH, CA

Overlook Parkway Extension
Ex Open + Alt4A
AM Peak Hour

Level Of Service Computation Report
2000 HCM 4-Way Stop Method (Future Volume Alternative)

Intersection #17 Kingdom Dr/Overlook Pkwy

Cycle (sec): 100 | Critical Vol./Cap.(X): 0.574
Loss Time (sec): 0 (Y+R=4.0 sec) | Average Delay (sec/veh): 12.8
Optimal Cycle: 0 | Level Of Service: B

Street Name:	Kingdom Dr						Overlook Pkwy					
Approach:	North Bound			South Bound			East Bound			West Bound		
Movement:	L -	T -	R	L -	T -	R	L -	T -	R	L -	T -	R
Control:	Stop Sign			Stop Sign			Stop Sign			Stop Sign		
Rights:	Include			Include			Include			Include		
Min. Green:	7	7	7	7	7	7	7	7	7	7	7	7
Lanes:	0 0	1! 0	0	1 0	0 0	0	1 0	1 1	0	1 0	1 1	0
Volume Module:												
Base Vol:	39	0	37	4	0	0	0	341	25	28	803	0
Growth Adj:	1.00	1.00	1.00	1.00	1.00	1.00	1.00	1.00	1.00	1.00	1.00	1.00
Initial Bse:	39	0	37	4	0	0	0	341	25	28	803	0
Added Vol:	0	0	0	0	0	0	0	0	0	0	0	0
PasserByVol:	0	0	0	0	0	0	0	0	0	0	0	0
Initial Fut:	39	0	37	4	0	0	0	341	25	28	803	0
User Adj:	1.00	1.00	1.00	1.00	1.00	1.00	1.00	1.00	1.00	1.00	1.00	1.00
PHF Adj:	1.00	1.00	1.00	1.00	1.00	1.00	1.00	1.00	1.00	1.00	1.00	1.00
PHF Volume:	39	0	37	4	0	0	0	341	25	28	803	0
Reduct Vol:	0	0	0	0	0	0	0	0	0	0	0	0
Reduced Vol:	39	0	37	4	0	0	0	341	25	28	803	0
PCE Adj:	1.00	1.00	1.00	1.00	1.00	1.00	1.00	1.00	1.00	1.00	1.00	1.00
MLF Adj:	1.00	1.00	1.00	1.00	1.00	1.00	1.00	1.00	1.00	1.00	1.00	1.00
FinalVolume:	39	0	37	4	0	0	0	341	25	28	803	0
Saturation Flow Module:												
Adjustment:	1.00	1.00	1.00	1.00	1.00	1.00	1.00	1.00	1.00	1.00	1.00	1.00
Lanes:	0.51	0.00	0.49	1.00	0.00	0.00	1.00	1.86	0.14	1.00	2.00	0.00
Final Sat.:	298	0	283	521	0	0	575	1184	88	636	1400	0
Capacity Analysis Module:												
Vol/Sat:	0.13	xxxx	0.13	0.01	xxxx	xxxx	0.00	0.29	0.29	0.04	0.57	xxxx
Crit Moves:	****			****				****			****	
Delay/Veh:	9.7	0.0	9.7	9.5	0.0	0.0	0.0	10.4	10.3	8.6	14.3	0.0
Delay Adj:	1.00	1.00	1.00	1.00	1.00	1.00	1.00	1.00	1.00	1.00	1.00	1.00
AdjDel/Veh:	9.7	0.0	9.7	9.5	0.0	0.0	0.0	10.4	10.3	8.6	14.3	0.0
LOS by Move:	A	*	A	A	*	*	*	B	B	A	B	*
ApproachDel:	9.7			9.5			10.4			14.1		
Delay Adj:	1.00			1.00			1.00			1.00		
ApprAdjDel:	9.7			9.5			10.4			14.1		
LOS by Appr:	A			A			B			B		
AllWayAvgQ:	0.1	0.1	0.1	0.0	0.0	0.0	0.0	0.4	0.4	0.0	1.3	1.3

Traffix 7.9.0415 (c) 2007 Dowling Assoc. Licensed to MMA, LONG BEACH, CA

Overlook Parkway Extension
Ex Open + Alt4A
AM Peak Hour

Level Of Service Computation Report
2000 HCM 4-Way Stop Method (Future Volume Alternative)

Intersection #28 Orozco Dr/Overlook Pkwy

Cycle (sec): 100 | Critical Vol./Cap.(X): 0.597
Loss Time (sec): 0 (Y+R=4.0 sec) | Average Delay (sec/veh): 13.0
Optimal Cycle: 0 | Level Of Service: B

Street Name:	Orozco Dr						Overlook Pkwy					
Approach:	North Bound			South Bound			East Bound			West Bound		
Movement:	L -	T -	R	L -	T -	R	L -	T -	R	L -	T -	R
Control:	Stop Sign			Stop Sign			Stop Sign			Stop Sign		
Rights:	Include			Include			Include			Include		
Min. Green:	7	7	7	7	7	7	7	7	7	7	7	7
Lanes:	0 0	1! 0	0	0 0	1! 0	0	1 0	1 1	0	1 0	1 1	0
Volume Module:												
Base Vol:	9	2	2	19	1	2	8	305	3	2	830	49
Growth Adj:	1.00	1.00	1.00	1.00	1.00	1.00	1.00	1.00	1.00	1.00	1.00	1.00
Initial Bse:	9	2	2	19	1	2	8	305	3	2	830	49
Added Vol:	0	0	0	0	0	0	0	0	0	0	0	0
PasserByVol:	0	0	0	0	0	0	0	0	0	0	0	0
Initial Fut:	9	2	2	19	1	2	8	305	3	2	830	49
User Adj:	1.00	1.00	1.00	1.00	1.00	1.00	1.00	1.00	1.00	1.00	1.00	1.00
PHF Adj:	1.00	1.00	1.00	1.00	1.00	1.00	1.00	1.00	1.00	1.00	1.00	1.00
PHF Volume:	9	2	2	19	1	2	8	305	3	2	830	49
Reduct Vol:	0	0	0	0	0	0	0	0	0	0	0	0
Reduced Vol:	9	2	2	19	1	2	8	305	3	2	830	49
PCE Adj:	1.00	1.00	1.00	1.00	1.00	1.00	1.00	1.00	1.00	1.00	1.00	1.00
MLF Adj:	1.00	1.00	1.00	1.00	1.00	1.00	1.00	1.00	1.00	1.00	1.00	1.00
FinalVolume:	9	2	2	19	1	2	8	305	3	2	830	49
Saturation Flow Module:												
Adjustment:	1.00	1.00	1.00	1.00	1.00	1.00	1.00	1.00	1.00	1.00	1.00	1.00
Lanes:	0.70	0.15	0.15	0.86	0.05	0.09	1.00	1.98	0.02	1.00	1.89	0.11
Final Sat.:	385	86	86	478	25	50	588	1279	13	662	1390	83
Capacity Analysis Module:												
Vol/Sat:	0.02	0.02	0.02	0.04	0.04	0.04	0.01	0.24	0.24	0.00	0.60	0.59
Crit Moves:	****				****			****			****	
Delay/Veh:	9.2	9.2	9.2	9.3	9.3	9.3	8.7	9.8	9.8	8.1	14.4	14.2
Delay Adj:	1.00	1.00	1.00	1.00	1.00	1.00	1.00	1.00	1.00	1.00	1.00	1.00
AdjDel/Veh:	9.2	9.2	9.2	9.3	9.3	9.3	8.7	9.8	9.8	8.1	14.4	14.2
LOS by Move:	A	A	A	A	A	A	A	A	A	A	B	B
ApproachDel:	9.2			9.3			9.8			14.4		
Delay Adj:	1.00			1.00			1.00			1.00		
ApprAdjDel:	9.2			9.3			9.8			14.4		
LOS by Appr:	A			A			A			B		
AllWayAvgQ:	0.0	0.0	0.0	0.0	0.0	0.0	0.0	0.3	0.3	0.0	1.4	1.4

Traffix 7.9.0415 (c) 2007 Dowling Assoc. Licensed to MMA, LONG BEACH, CA

Overlook Parkway Extension
Ex Open + Alt4A
PM Peak Hour

Level Of Service Computation Report
2000 HCM Operations Method (Future Volume Alternative)

Intersection #5 Madison St/Victoria Ave

Cycle (sec): 100 Critical Vol./Cap.(X): 0.878
Loss Time (sec): 16 (Y+R=4.0 sec) Average Delay (sec/veh): 48.5
Optimal Cycle: 108 Level Of Service: D

Street Name:	Madison St						Victoria Ave					
Approach:	North Bound			South Bound			East Bound			West Bound		
Movement:	L -	T -	R	L -	T -	R	L -	T -	R	L -	T -	R
Control:	Split Phase			Split Phase			Split Phase			Split Phase		
Rights:	Include			Include			Include			Include		
Min. Green:	7	7	7	7	7	7	7	7	7	7	7	7
Lanes:	0 1	0 1	0	0 1	0 1	0	0 1	0 0	1	0 1	0 0	1
Volume Module:												
Base Vol:	383	381	53	17	561	35	46	146	461	11	77	6
Growth Adj:	1.00	1.00	1.00	1.00	1.00	1.00	1.00	1.00	1.00	1.00	1.00	1.00
Initial Bse:	383	381	53	17	561	35	46	146	461	11	77	6
Added Vol:	0	0	0	0	0	0	0	0	0	0	0	0
PasserByVol:	0	0	0	0	0	0	0	0	0	0	0	0
Initial Fut:	383	381	53	17	561	35	46	146	461	11	77	6
User Adj:	1.00	1.00	1.00	1.00	1.00	1.00	1.00	1.00	1.00	1.00	1.00	1.00
PHF Adj:	1.00	1.00	1.00	1.00	1.00	1.00	1.00	1.00	1.00	1.00	1.00	1.00
PHF Volume:	383	381	53	17	561	35	46	146	461	11	77	6
Reduct Vol:	0	0	0	0	0	0	0	0	0	0	0	0
Reduced Vol:	383	381	53	17	561	35	46	146	461	11	77	6
PCE Adj:	1.00	1.00	1.00	1.00	1.00	1.00	1.00	1.00	1.00	1.00	1.00	1.00
MLF Adj:	1.00	1.00	1.00	1.00	1.00	1.00	1.00	1.00	1.00	1.00	1.00	1.00
FinalVolume:	383	381	53	17	561	35	46	146	461	11	77	6
Saturation Flow Module:												
Sat/Lane:	1900	1900	1900	1900	1900	1900	1900	1900	1900	1900	1900	1900
Adjustment:	0.92	0.92	0.92	0.94	0.94	0.94	0.99	0.99	0.85	0.99	0.99	0.85
Lanes:	0.94	0.93	0.13	0.06	1.83	0.11	0.24	0.76	1.00	0.12	0.88	1.00
Final Sat.:	1637	1628	227	99	3271	204	450	1427	1615	236	1653	1615
Capacity Analysis Module:												
Vol/Sat:	0.23	0.23	0.23	0.17	0.17	0.17	0.10	0.10	0.29	0.05	0.05	0.00
Crit Moves:	****			****					****		****	
Green/Cycle:	0.26	0.26	0.26	0.19	0.19	0.19	0.32	0.32	0.32	0.07	0.07	0.07
Volume/Cap:	0.90	0.90	0.90	0.90	0.90	0.90	0.32	0.32	0.90	0.67	0.67	0.05
Delay/Veh:	47.2	47.2	47.2	54.1	54.1	54.1	26.2	26.2	50.9	57.5	57.5	43.6
User DelAdj:	1.00	1.00	1.00	1.00	1.00	1.00	1.00	1.00	1.00	1.00	1.00	1.00
AdjDel/Veh:	47.2	47.2	47.2	54.1	54.1	54.1	26.2	26.2	50.9	57.5	57.5	43.6
LOS by Move:	D	D	D	D	D	D	C	C	D	E	E	D
HCM2kAvgQ:	16	16	16	13	13	13	5	5	17	4	4	0

Note: Queue reported is the number of cars per lane.

Traffix 7.9.0415 (c) 2007 Dowling Assoc. Licensed to MMA, LONG BEACH, CA

Overlook Parkway Extension
Ex Open + Alt4A
PM Peak Hour

Level Of Service Computation Report
2000 HCM Operations Method (Future Volume Alternative)

Intersection #14 Alessandro Blvd/Overlook Pkwy

Cycle (sec): 100 Critical Vol./Cap.(X): 1.001
Loss Time (sec): 16 (Y+R=4.0 sec) Average Delay (sec/veh): 52.9
Optimal Cycle: 130 Level Of Service: D

Street Name:	Alessandro Blvd						Overlook Pkwy					
Approach:	North Bound			South Bound			East Bound			West Bound		
Movement:	L -	T -	R	L -	T -	R	L -	T -	R	L -	T -	R
Control:	Protected			Protected			Split Phase			Split Phase		
Rights:	Ovl			Ovl			Ovl			Include		
Min. Green:	7	7	7	7	7	7	7	7	7	7	7	7
Lanes:	1 0	3 0	1	1 0	3 0	1	0 1	0 0	2	3 0	0 1	0
Volume Module:												
Base Vol:	438	941	429	8	2300	167	32	63	870	545	179	3
Growth Adj:	1.00	1.00	1.00	1.00	1.00	1.00	1.00	1.00	1.00	1.00	1.00	1.00
Initial Bse:	438	941	429	8	2300	167	32	63	870	545	179	3
Added Vol:	0	0	0	0	0	0	0	0	0	0	0	0
PasserByVol:	0	0	0	0	0	0	0	0	0	0	0	0
Initial Fut:	438	941	429	8	2300	167	32	63	870	545	179	3
User Adj:	1.00	1.00	1.00	1.00	1.00	1.00	1.00	1.00	1.00	1.00	1.00	1.00
PHF Adj:	1.00	1.00	1.00	1.00	1.00	1.00	1.00	1.00	1.00	1.00	1.00	1.00
PHF Volume:	438	941	429	8	2300	167	32	63	870	545	179	3
Reduct Vol:	0	0	0	0	0	0	0	0	0	0	0	0
Reduced Vol:	438	941	429	8	2300	167	32	63	870	545	179	3
PCE Adj:	1.00	1.00	1.00	1.00	1.00	1.00	1.00	1.00	1.00	1.00	1.00	1.00
MLF Adj:	1.00	1.00	1.00	1.00	1.00	1.00	1.00	1.00	1.00	1.00	1.00	1.00
FinalVolume:	438	941	429	8	2300	167	32	63	870	545	179	3
Saturation Flow Module:												
Sat/Lane:	1900	1900	1900	1900	1900	1900	1900	1900	1900	1900	1900	1900
Adjustment:	0.95	0.91	0.85	0.95	0.91	0.85	0.98	0.98	0.75	0.92	1.00	1.00
Lanes:	1.00	3.00	1.00	1.00	3.00	1.00	0.34	0.66	2.00	3.00	0.98	0.02
Final Sat.:	1805	5187	1615	1805	5187	1615	629	1239	2842	5253	1865	31
Capacity Analysis Module:												
Vol/Sat:	0.24	0.18	0.27	0.00	0.44	0.10	0.05	0.05	0.31	0.10	0.10	0.10
Crit Moves:	****				****			****		****		
Green/Cycle:	0.24	0.48	0.58	0.19	0.43	0.50	0.07	0.07	0.31	0.10	0.10	0.10
Volume/Cap:	1.03	0.38	0.46	0.02	1.03	0.21	0.73	0.73	1.00	1.03	0.95	0.95
Delay/Veh:	88.5	16.4	12.1	33.3	54.3	13.9	63.9	63.9	64.7	90.7	94.9	94.9
User DelAdj:	1.00	1.00	1.00	1.00	1.00	1.00	1.00	1.00	1.00	1.00	1.00	1.00
AdjDel/Veh:	88.5	16.4	12.1	33.3	54.3	13.9	63.9	63.9	64.7	90.7	94.9	94.9
LOS by Move:	F	B	B	C	D	B	E	E	E	F	F	F
HCM2kAvgQ:	20	7	8	0	35	3	4	4	22	10	9	9

Note: Queue reported is the number of cars per lane.

Traffix 7.9.0415 (c) 2007 Dowling Assoc. Licensed to MMA, LONG BEACH, CA

Overlook Parkway Extension
Ex Open + Alt4A
PM Peak Hour

Level Of Service Computation Report
2000 HCM 4-Way Stop Method (Future Volume Alternative)

Intersection #17 Kingdom Dr/Overlook Pkwy

Cycle (sec): 100 | Critical Vol./Cap.(X): 0.704
Loss Time (sec): 0 (Y+R=4.0 sec) | Average Delay (sec/veh): 18.0
Optimal Cycle: 0 | Level Of Service: C

Street Name:	Kingdom Dr						Overlook Pkwy					
Approach:	North Bound			South Bound			East Bound			West Bound		
Movement:	L -	T -	R	L -	T -	R	L -	T -	R	L -	T -	R
Control:	Stop Sign			Stop Sign			Stop Sign			Stop Sign		
Rights:	Include			Include			Include			Include		
Min. Green:	7	7	7	7	7	7	7	7	7	7	7	7
Lanes:	0 0	1! 0	0	1 0	0 0	0	1 0	1 1	0	1 0	1 1	0
Volume Module:												
Base Vol:	16	0	30	3	0	0	0	888	18	29	760	3
Growth Adj:	1.00	1.00	1.00	1.00	1.00	1.00	1.00	1.00	1.00	1.00	1.00	1.00
Initial Bse:	16	0	30	3	0	0	0	888	18	29	760	3
Added Vol:	0	0	0	0	0	0	0	0	0	0	0	0
PasserByVol:	0	0	0	0	0	0	0	0	0	0	0	0
Initial Fut:	16	0	30	3	0	0	0	888	18	29	760	3
User Adj:	1.00	1.00	1.00	1.00	1.00	1.00	1.00	1.00	1.00	1.00	1.00	1.00
PHF Adj:	1.00	1.00	1.00	1.00	1.00	1.00	1.00	1.00	1.00	1.00	1.00	1.00
PHF Volume:	16	0	30	3	0	0	0	888	18	29	760	3
Reduct Vol:	0	0	0	0	0	0	0	0	0	0	0	0
Reduced Vol:	16	0	30	3	0	0	0	888	18	29	760	3
PCE Adj:	1.00	1.00	1.00	1.00	1.00	1.00	1.00	1.00	1.00	1.00	1.00	1.00
MLF Adj:	1.00	1.00	1.00	1.00	1.00	1.00	1.00	1.00	1.00	1.00	1.00	1.00
FinalVolume:	16	0	30	3	0	0	0	888	18	29	760	3
Saturation Flow Module:												
Adjustment:	1.00	1.00	1.00	1.00	1.00	1.00	1.00	1.00	1.00	1.00	1.00	1.00
Lanes:	0.35	0.00	0.65	1.00	0.00	0.00	1.00	1.96	0.04	1.00	1.99	0.01
Final Sat.:	192	0	361	495	0	0	584	1261	26	567	1242	5
Capacity Analysis Module:												
Vol/Sat:	0.08	xxxx	0.08	0.01	xxxx	xxxx	0.00	0.70	0.70	0.05	0.61	0.61
Crit Moves:	****			****				****			****	
Delay/Veh:	9.8	0.0	9.8	10.0	0.0	0.0	0.0	19.9	19.8	9.2	16.6	16.6
Delay Adj:	1.00	1.00	1.00	1.00	1.00	1.00	1.00	1.00	1.00	1.00	1.00	1.00
AdjDel/Veh:	9.8	0.0	9.8	10.0	0.0	0.0	0.0	19.9	19.8	9.2	16.6	16.6
LOS by Move:	A	*	A	A	*	*	*	C	C	A	C	C
ApproachDel:	9.8			10.0			19.9			16.4		
Delay Adj:	1.00			1.00			1.00			1.00		
ApprAdjDel:	9.8			10.0			19.9			16.4		
LOS by Appr:	A			A			C			C		
AllWayAvgQ:	0.1	0.1	0.1	0.0	0.0	0.0	0.0	2.1	2.1	0.1	1.4	1.4

Overlook Parkway Extension
Ex Open + Alt4A
PM Peak Hour

Level Of Service Computation Report
2000 HCM 4-Way Stop Method (Future Volume Alternative)

Intersection #28 Orozco Dr/Overlook Pkwy

Cycle (sec): 100 | Critical Vol./Cap.(X): 0.665
Loss Time (sec): 0 (Y+R=4.0 sec) | Average Delay (sec/veh): 18.0
Optimal Cycle: 0 | Level Of Service: C

Street Name:	Orozco Dr						Overlook Pkwy					
Approach:	North Bound			South Bound			East Bound			West Bound		
Movement:	L -	T -	R	L -	T -	R	L -	T -	R	L -	T -	R
Control:	Stop Sign			Stop Sign			Stop Sign			Stop Sign		
Rights:	Include			Include			Include			Include		
Min. Green:	7	7	7	7	7	7	7	7	7	7	7	7
Lanes:	0 0	1! 0	0	0 0	1! 0	0	1 0	1 1	0	1 0	1 1	0
Volume Module:												
Base Vol:	8	0	1	42	2	10	11	823	12	0	816	10
Growth Adj:	1.00	1.00	1.00	1.00	1.00	1.00	1.00	1.00	1.00	1.00	1.00	1.00
Initial Bse:	8	0	1	42	2	10	11	823	12	0	816	10
Added Vol:	0	0	0	0	0	0	0	0	0	0	0	0
PasserByVol:	0	0	0	0	0	0	0	0	0	0	0	0
Initial Fut:	8	0	1	42	2	10	11	823	12	0	816	10
User Adj:	1.00	1.00	1.00	1.00	1.00	1.00	1.00	1.00	1.00	1.00	1.00	1.00
PHF Adj:	1.00	1.00	1.00	1.00	1.00	1.00	1.00	1.00	1.00	1.00	1.00	1.00
PHF Volume:	8	0	1	42	2	10	11	823	12	0	816	10
Reduct Vol:	0	0	0	0	0	0	0	0	0	0	0	0
Reduced Vol:	8	0	1	42	2	10	11	823	12	0	816	10
PCE Adj:	1.00	1.00	1.00	1.00	1.00	1.00	1.00	1.00	1.00	1.00	1.00	1.00
MLF Adj:	1.00	1.00	1.00	1.00	1.00	1.00	1.00	1.00	1.00	1.00	1.00	1.00
FinalVolume:	8	0	1	42	2	10	11	823	12	0	816	10
Saturation Flow Module:												
Adjustment:	1.00	1.00	1.00	1.00	1.00	1.00	1.00	1.00	1.00	1.00	1.00	1.00
Lanes:	0.89	0.00	0.11	0.78	0.04	0.18	1.00	1.97	0.03	1.00	1.98	0.02
Final Sat.:	441	0	55	405	19	96	572	1238	18	569	1236	15
Capacity Analysis Module:												
Vol/Sat:	0.02	xxxx	0.02	0.10	0.10	0.10	0.02	0.66	0.66	0.00	0.66	0.66
Crit Moves:	****				****			****			****	
Delay/Veh:	10.0	0.0	10.0	10.4	10.4	10.4	9.0	18.5	18.4	0.0	18.3	18.3
Delay Adj:	1.00	1.00	1.00	1.00	1.00	1.00	1.00	1.00	1.00	1.00	1.00	1.00
AdjDel/Veh:	10.0	0.0	10.0	10.4	10.4	10.4	9.0	18.5	18.4	0.0	18.3	18.3
LOS by Move:	B	*	B	B	B	B	A	C	C	*	C	C
ApproachDel:	10.0			10.4			18.3			18.3		
Delay Adj:	1.00			1.00			1.00			1.00		
ApprAdjDel:	10.0			10.4			18.3			18.3		
LOS by Appr:	B			B			C			C		
AllWayAvgQ:	0.0	0.0	0.0	0.1	0.1	0.1	0.0	1.8	1.8	0.0	1.7	1.7

APPENDIX C:
TRAFFIX WORKSHEETS
2035 CONDITIONS – GATES CLOSED

MITIGATION SCENARIO 2 (2035 GATES CLOSED)


```
Future Alt 2 AM            Wed Apr 25, 2012 07:48:01                Page 5-1
-------------------------------------------------------------------------------
                           Overlook Parkway Extension
                    Future Alt 2 (Gates Opened - No Overlook)
                                AM Peak Hour
-------------------------------------------------------------------------------
                       Level Of Service Computation Report
            2000 HCM Operations Method (Future Volume Alternative)
*******************************************************************************
Intersection #3 Madison St/Indiana Ave
*******************************************************************************
Cycle (sec):         100                Critical Vol./Cap.(X):         0.995
Loss Time (sec):      16 (Y+R=4.0 sec)  Average Delay (sec/veh):        63.8
Optimal Cycle:       130                Level Of Service:                 E
*******************************************************************************
Street Name:            Madison St                      Indiana Ave
Approach:      North Bound      South Bound       East Bound       West Bound
Movement:     L  -  T  -  R    L  -  T  -  R    L  -  T  -  R    L  -  T  -  R
------------|---------------||---------------||---------------||---------------|
Control:        Protected        Protected        Protected        Protected
Rights:           Include          Include          Include           Ovl
Min. Green:     7    7    7     7    7    7     7    7    7     7    7    7
Lanes:        1  0  1  1  0    1  0  1  1  0    1  0  1  1  0    1  0  2  0  1
------------|---------------||---------------||---------------||---------------|
Volume Module:
Base Vol:      89  822    50   714  458   391   190  652    26    14  302   545
Growth Adj:  1.00 1.00  1.00  1.00 1.00  1.00  1.00 1.00  1.00  1.00 1.00  1.00
Initial Bse:   89  822    50   714  458   391   190  652    26    14  302   545
Added Vol:      0    0     0     0    0     0     0    0     0     0    0     0
PasserByVol:    0    0     0     0    0     0     0    0     0     0    0     0
Initial Fut:   89  822    50   714  458   391   190  652    26    14  302   545
User Adj:    1.00 1.00  1.00  1.00 1.00  1.00  1.00 1.00  1.00  1.00 1.00  1.00
PHF Adj:     1.00 1.00  1.00  1.00 1.00  1.00  1.00 1.00  1.00  1.00 1.00  1.00
PHF Volume:    89  822    50   714  458   391   190  652    26    14  302   545
Reduct Vol:     0    0     0     0    0     0     0    0     0     0    0     0
Reduced Vol:   89  822    50   714  458   391   190  652    26    14  302   545
PCE Adj:     1.00 1.00  1.00  1.00 1.00  1.00  1.00 1.00  1.00  1.00 1.00  1.00
MLF Adj:     1.00 1.00  1.00  1.00 1.00  1.00  1.00 1.00  1.00  1.00 1.00  1.00
FinalVolume:   89  822    50   714  458   391   190  652    26    14  302   545
------------|---------------||---------------||---------------||---------------|
Saturation Flow Module:
Sat/Lane:    1900 1900  1900  1900 1900  1900  1900 1900  1900  1900 1900  1900
Adjustment:  0.95 0.94  0.94  0.95 0.88  0.88  0.95 0.94  0.94  0.95 0.95  0.85
Lanes:       1.00 1.89  0.11  1.00 1.08  0.92  1.00 1.92  0.08  1.00 2.00  1.00
Final Sat.:  1805 3372   205  1805 1813  1548  1805 3451   138  1805 3610  1615
------------|---------------||---------------||---------------||---------------|
Capacity Analysis Module:
Vol/Sat:     0.05 0.24  0.24  0.40 0.25  0.25  0.11 0.19  0.19  0.01 0.08  0.34
Crit Moves:        ****        ****                  ****        ****
Green/Cycle: 0.13 0.23  0.23  0.37 0.47  0.47  0.14 0.18  0.18  0.07 0.11  0.48
Volume/Cap:  0.38 1.08  1.08  1.08 0.54  0.54  0.77 1.08  1.08  0.11 0.77  0.71
Delay/Veh:   41.0 92.6  92.6  88.7 19.5  19.5  55.3 99.1  99.1  44.0 52.3  23.7
User DelAdj: 1.00 1.00  1.00  1.00 1.00  1.00  1.00 1.00  1.00  1.00 1.00  1.00
AdjDel/Veh:  41.0 92.6  92.6  88.7 19.5  19.5  55.3 99.1  99.1  44.0 52.3  23.7
LOS by Move:   D    F     F     F    B     B     E    F     F     D    D     C
HCM2kAvgQ:      3   23    23    33   10    10     8   18    18     0    7    14
*******************************************************************************
Note: Queue reported is the number of cars per lane.

  Traffix 7.9.0415 (c) 2007 Dowling Assoc. Licensed to MMA, LONG BEACH, CA
```

Overlook Parkway Extension
Future Alt 2 (Gates Opened - No Overlook)
AM Peak Hour

Level Of Service Computation Report
2000 HCM Operations Method (Future Volume Alternative)

Intersection #5 Madison St/Victoria Ave

Cycle (sec):	100	Critical Vol./Cap.(X):	0.598
Loss Time (sec):	16 (Y+R=4.0 sec)	Average Delay (sec/veh):	32.9
Optimal Cycle:	57	Level Of Service:	C

Street Name:	Madison St						Victoria Ave					
Approach:	North Bound			South Bound			East Bound			West Bound		
Movement:	L - T - R			L - T - R			L - T - R			L - T - R		
Control:	Split Phase			Split Phase			Split Phase			Split Phase		
Rights:	Include			Include			Include			Ovl		
Min. Green:	7	7	7	7	7	7	7	7	7	7	7	7
Lanes:	0 0	1! 0	0	1 0	0 1	0	0 0	1! 0	0	0 1	0 0	1
Volume Module:												
Base Vol:	8	143	21	180	40	20	47	247	2	4	220	408
Growth Adj:	1.00	1.00	1.00	1.00	1.00	1.00	1.00	1.00	1.00	1.00	1.00	1.00
Initial Bse:	8	143	21	180	40	20	47	247	2	4	220	408
Added Vol:	0	0	0	0	0	0	0	0	0	0	0	0
PasserByVol:	0	0	0	0	0	0	0	0	0	0	0	0
Initial Fut:	8	143	21	180	40	20	47	247	2	4	220	408
User Adj:	1.00	1.00	1.00	1.00	1.00	1.00	1.00	1.00	1.00	1.00	1.00	1.00
PHF Adj:	1.00	1.00	1.00	1.00	1.00	1.00	1.00	1.00	1.00	1.00	1.00	1.00
PHF Volume:	8	143	21	180	40	20	47	247	2	4	220	408
Reduct Vol:	0	0	0	0	0	0	0	0	0	0	0	0
Reduced Vol:	8	143	21	180	40	20	47	247	2	4	220	408
PCE Adj:	1.00	1.00	1.00	1.00	1.00	1.00	1.00	1.00	1.00	1.00	1.00	1.00
MLF Adj:	1.00	1.00	1.00	1.00	1.00	1.00	1.00	1.00	1.00	1.00	1.00	1.00
FinalVolume:	8	143	21	180	40	20	47	247	2	4	220	408
Saturation Flow Module:												
Sat/Lane:	1900	1900	1900	1900	1900	1900	1900	1900	1900	1900	1900	1900
Adjustment:	0.98	0.98	0.98	0.95	0.95	0.95	0.99	0.99	0.99	1.00	1.00	0.85
Lanes:	0.05	0.83	0.12	1.00	0.67	0.33	0.16	0.83	0.01	0.02	0.98	1.00
Final Sat.:	87	1551	228	1805	1203	602	299	1571	13	34	1864	1615
Capacity Analysis Module:												
Vol/Sat:	0.09	0.09	0.09	0.10	0.03	0.03	0.16	0.16	0.16	0.12	0.12	0.25
Crit Moves:	****			****			****					****
Green/Cycle:	0.15	0.15	0.15	0.17	0.17	0.17	0.26	0.26	0.26	0.26	0.26	0.42
Volume/Cap:	0.60	0.60	0.60	0.60	0.20	0.20	0.60	0.60	0.60	0.46	0.46	0.60
Delay/Veh:	42.8	42.8	42.8	41.8	36.2	36.2	34.2	34.2	34.2	32.1	32.1	23.8
User DelAdj:	1.00	1.00	1.00	1.00	1.00	1.00	1.00	1.00	1.00	1.00	1.00	1.00
AdjDel/Veh:	42.8	42.8	42.8	41.8	36.2	36.2	34.2	34.2	34.2	32.1	32.1	23.8
LOS by Move:	D	D	D	D	D	D	C	C	C	C	C	C
HCM2kAvgQ:	6	6	6	6	2	2	9	9	9	6	6	10

Note: Queue reported is the number of cars per lane.

Traffix 7.9.0415 (c) 2007 Dowling Assoc. Licensed to MMA, LONG BEACH, CA

Overlook Parkway Extension
Future Alt 2 (Gates Opened - No Overlook)
AM Peak Hour

Level Of Service Computation Report
2000 HCM 4-Way Stop Method (Future Volume Alternative)

Intersection #7 Washington St/Lincoln Ave

Cycle (sec):	100	Critical Vol./Cap.(X):	1.831
Loss Time (sec):	0 (Y+R=4.0 sec)	Average Delay (sec/veh):	181.1
Optimal Cycle:	0	Level Of Service:	F

Street Name:	Washington St						Lincoln Ave					
Approach:	North Bound			South Bound			East Bound			West Bound		
Movement:	L - T - R			L - T - R			L - T - R			L - T - R		
Control:	Stop Sign			Stop Sign			Stop Sign			Stop Sign		
Rights:	Include			Include			Include			Include		
Min. Green:	7	7	7	7	7	7	7	7	7	7	7	7
Lanes:	1 0	0 1	0	1 0	0 1	0	0 1	0 0	1	0 1	0 0	1
Volume Module:												
Base Vol:	60	744	69	89	287	18	11	333	17	53	238	74
Growth Adj:	1.00	1.00	1.00	1.00	1.00	1.00	1.00	1.00	1.00	1.00	1.00	1.00
Initial Bse:	60	744	69	89	287	18	11	333	17	53	238	74
Added Vol:	0	0	0	0	0	0	0	0	0	0	0	0
PasserByVol:	0	0	0	0	0	0	0	0	0	0	0	0
Initial Fut:	60	744	69	89	287	18	11	333	17	53	238	74
User Adj:	1.00	1.00	1.00	1.00	1.00	1.00	1.00	1.00	1.00	1.00	1.00	1.00
PHF Adj:	1.00	1.00	1.00	1.00	1.00	1.00	1.00	1.00	1.00	1.00	1.00	1.00
PHF Volume:	60	744	69	89	287	18	11	333	17	53	238	74
Reduct Vol:	0	0	0	0	0	0	0	0	0	0	0	0
Reduced Vol:	60	744	69	89	287	18	11	333	17	53	238	74
PCE Adj:	1.00	1.00	1.00	1.00	1.00	1.00	1.00	1.00	1.00	1.00	1.00	1.00
MLF Adj:	1.00	1.00	1.00	1.00	1.00	1.00	1.00	1.00	1.00	1.00	1.00	1.00
FinalVolume:	60	744	69	89	287	18	11	333	17	53	238	74
Saturation Flow Module:												
Adjustment:	1.00	1.00	1.00	1.00	1.00	1.00	1.00	1.00	1.00	1.00	1.00	1.00
Lanes:	1.00	0.92	0.08	1.00	0.94	0.06	0.03	0.97	1.00	0.18	0.82	1.00
Final Sat.:	410	406	38	393	395	25	13	405	453	74	333	447
Capacity Analysis Module:												
Vol/Sat:	0.15	1.83	1.83	0.23	0.73	0.73	0.82	0.82	0.04	0.71	0.71	0.17
Crit Moves:		****			****			****			****	
Delay/Veh:	12.8	402	401.9	14.2	29.7	29.7	39.2	39.2	10.8	29.5	29.5	12.1
Delay Adj:	1.00	1.00	1.00	1.00	1.00	1.00	1.00	1.00	1.00	1.00	1.00	1.00
AdjDel/Veh:	12.8	402	401.9	14.2	29.7	29.7	39.2	39.2	10.8	29.5	29.5	12.1
LOS by Move:	B	F	F	B	D	D	E	E	B	D	D	B
ApproachDel:	375.2			26.2			37.9			26.0		
Delay Adj:	1.00			1.00			1.00			1.00		
ApprAdjDel:	375.2			26.2			37.9			26.0		
LOS by Appr:	F			D			E			D		
AllWayAvgQ:	0.2	48.2	48.2	0.3	2.2	2.2	3.3	3.3	0.0	2.0	2.0	0.2

Traffix 7.9.0415 (c) 2007 Dowling Assoc. Licensed to MMA, LONG BEACH, CA

Overlook Parkway Extension
Future Alt 2 (Gates Opened - No Overlook)
AM Peak Hour

Level Of Service Computation Report
2000 HCM Operations Method (Future Volume Alternative)

Intersection #8 Washington St/Victoria Ave

Cycle (sec):	100	Critical Vol./Cap.(X):	1.218
Loss Time (sec):	16 (Y+R=4.0 sec)	Average Delay (sec/veh):	133.0
Optimal Cycle:	130	Level Of Service:	F

Street Name:	Washington St						Victoria Ave					
Approach:	North Bound			South Bound			East Bound			West Bound		
Movement:	L -	T -	R	L -	T -	R	L -	T -	R	L -	T -	R
Control:	Split Phase			Split Phase			Split Phase			Split Phase		
Rights:	Include			Include			Ovl			Ovl		
Min. Green:	7	7	7	7	7	7	7	7	7	7	7	7
Lanes:	0 1	0 1	0	0 1	0 1	0	0 1	0 0	1	0 1	0 0	1
Volume Module:												
Base Vol:	467	852	685	10	327	9	9	156	220	299	156	15
Growth Adj:	1.00	1.00	1.00	1.00	1.00	1.00	1.00	1.00	1.00	1.00	1.00	1.00
Initial Bse:	467	852	685	10	327	9	9	156	220	299	156	15
Added Vol:	0	0	0	0	0	0	0	0	0	0	0	0
PasserByVol:	0	0	0	0	0	0	0	0	0	0	0	0
Initial Fut:	467	852	685	10	327	9	9	156	220	299	156	15
User Adj:	1.00	1.00	1.00	1.00	1.00	1.00	1.00	1.00	1.00	1.00	1.00	1.00
PHF Adj:	1.00	1.00	1.00	1.00	1.00	1.00	1.00	1.00	1.00	1.00	1.00	1.00
PHF Volume:	467	852	685	10	327	9	9	156	220	299	156	15
Reduct Vol:	0	0	0	0	0	0	0	0	0	0	0	0
Reduced Vol:	467	852	685	10	327	9	9	156	220	299	156	15
PCE Adj:	1.00	1.00	1.00	1.00	1.00	1.00	1.00	1.00	1.00	1.00	1.00	1.00
MLF Adj:	1.00	1.00	1.00	1.00	1.00	1.00	1.00	1.00	1.00	1.00	1.00	1.00
FinalVolume:	467	852	685	10	327	9	9	156	220	299	156	15
Saturation Flow Module:												
Sat/Lane:	1900	1900	1900	1900	1900	1900	1900	1900	1900	1900	1900	1900
Adjustment:	0.89	0.89	0.89	0.95	0.95	0.95	1.00	1.00	0.85	0.97	0.97	0.85
Lanes:	0.47	0.85	0.68	0.06	1.89	0.05	0.05	0.95	1.00	0.66	0.34	1.00
Final Sat.:	789	1439	1157	104	3395	93	103	1791	1615	1209	631	1615
Capacity Analysis Module:												
Vol/Sat:	0.59	0.59	0.59	0.10	0.10	0.10	0.09	0.09	0.14	0.25	0.25	0.01
Crit Moves:	****			****			****			****		
Green/Cycle:	0.49	0.49	0.49	0.08	0.08	0.08	0.07	0.07	0.56	0.20	0.20	0.28
Volume/Cap:	1.22	1.22	1.22	1.22	1.22	1.22	1.22	1.22	0.24	1.22	1.22	0.03
Delay/Veh:	129.4	129	129.4	171.7	172	171.7	193.8	194	11.5	159.8	160	26.0
User DelAdj:	1.00	1.00	1.00	1.00	1.00	1.00	1.00	1.00	1.00	1.00	1.00	1.00
AdjDel/Veh:	129.4	129	129.4	171.7	172	171.7	193.8	194	11.5	159.8	160	26.0
LOS by Move:	F	F	F	F	F	F	F	F	B	F	F	C
HCM2kAvgQ:	58	58	58	12	12	12	11	11	3	27	27	0

Note: Queue reported is the number of cars per lane.

Traffix 7.9.0415 (c) 2007 Dowling Assoc. Licensed to MMA, LONG BEACH, CA

Overlook Parkway Extension
Future Alt 2 (Gates Opened - No Overlook)
AM Peak Hour

Level Of Service Computation Report
2000 HCM Operations Method (Future Volume Alternative)

Intersection #12 Victoria Ave/Arlington Ave

Cycle (sec):	100	Critical Vol./Cap.(X):	1.096
Loss Time (sec):	16 (Y+R=4.0 sec)	Average Delay (sec/veh):	76.9
Optimal Cycle:	130	Level Of Service:	E

Street Name:	Victoria Ave						Arlington Ave					
Approach:	North Bound			South Bound			East Bound			West Bound		
Movement:	L -	T -	R	L -	T -	R	L -	T -	R	L -	T -	R
Control:	Protected			Protected			Protected			Protected		
Rights:	Ovl			Include			Include			Ovl		
Min. Green:	7	7	7	7	7	7	7	7	7	7	7	7
Lanes:	1 0	1 0	1	1 0	1 0	1	1 0	2 1	0	1 0	3 0	1
Volume Module:												
Base Vol:	28	475	453	230	305	190	287	1533	8	404	1994	335
Growth Adj:	1.00	1.00	1.00	1.00	1.00	1.00	1.00	1.00	1.00	1.00	1.00	1.00
Initial Bse:	28	475	453	230	305	190	287	1533	8	404	1994	335
Added Vol:	0	0	0	0	0	0	0	0	0	0	0	0
PasserByVol:	0	0	0	0	0	0	0	0	0	0	0	0
Initial Fut:	28	475	453	230	305	190	287	1533	8	404	1994	335
User Adj:	1.00	1.00	1.00	1.00	1.00	1.00	1.00	1.00	1.00	1.00	1.00	1.00
PHF Adj:	1.00	1.00	1.00	1.00	1.00	1.00	1.00	1.00	1.00	1.00	1.00	1.00
PHF Volume:	28	475	453	230	305	190	287	1533	8	404	1994	335
Reduct Vol:	0	0	0	0	0	0	0	0	0	0	0	0
Reduced Vol:	28	475	453	230	305	190	287	1533	8	404	1994	335
PCE Adj:	1.00	1.00	1.00	1.00	1.00	1.00	1.00	1.00	1.00	1.00	1.00	1.00
MLF Adj:	1.00	1.00	1.00	1.00	1.00	1.00	1.00	1.00	1.00	1.00	1.00	1.00
FinalVolume:	28	475	453	230	305	190	287	1533	8	404	1994	335
Saturation Flow Module:												
Sat/Lane:	1900	1900	1900	1900	1900	1900	1900	1900	1900	1900	1900	1900
Adjustment:	0.95	1.00	0.85	0.95	1.00	0.85	0.95	0.91	0.91	0.95	0.91	0.85
Lanes:	1.00	1.00	1.00	1.00	1.00	1.00	1.00	2.98	0.02	1.00	3.00	1.00
Final Sat.:	1805	1900	1615	1805	1900	1615	1805	5155	27	1805	5187	1615
Capacity Analysis Module:												
Vol/Sat:	0.02	0.25	0.28	0.13	0.16	0.12	0.16	0.30	0.30	0.22	0.38	0.21
Crit Moves:		****		****			****				****	
Green/Cycle:	0.10	0.23	0.44	0.12	0.24	0.24	0.15	0.28	0.28	0.21	0.35	0.47
Volume/Cap:	0.15	1.10	0.64	1.10	0.67	0.49	1.10	1.05	1.05	1.05	1.10	0.44
Delay/Veh:	41.1	110	23.6	134.4	38.3	33.7	126.5	74.2	74.2	99.4	85.1	18.3
User DelAdj:	1.00	1.00	1.00	1.00	1.00	1.00	1.00	1.00	1.00	1.00	1.00	1.00
AdjDel/Veh:	41.1	110	23.6	134.4	38.3	33.7	126.5	74.2	74.2	99.4	85.1	18.3
LOS by Move:	D	F	C	F	D	C	F	E	E	F	F	B
HCM2kAvgQ:	1	24	11	13	10	5	16	26	26	20	35	7

Note: Queue reported is the number of cars per lane.

Traffix 7.9.0415 (c) 2007 Dowling Assoc. Licensed to MMA, LONG BEACH, CA

Overlook Parkway Extension
Future Alt 2 (Gates Opened - No Overlook)
AM Peak Hour

Level Of Service Computation Report
2000 HCM Operations Method (Future Volume Alternative)

Intersection #19 Trautwein Rd/John F. Kennedy Dr

Cycle (sec):	100	Critical Vol./Cap.(X):	1.083
Loss Time (sec):	16 (Y+R=4.0 sec)	Average Delay (sec/veh):	84.2
Optimal Cycle:	130	Level Of Service:	F

Street Name:	Trautwein Rd						John F. Kennedy Dr					
Approach:	North Bound			South Bound			East Bound			West Bound		
Movement:	L -	T -	R	L -	T -	R	L -	T -	R	L -	T -	R
Control:	Protected			Protected			Protected			Protected		
Rights:	Include			Ovl			Include			Include		
Min. Green:	7	7	7	7	7	7	7	7	7	7	7	7
Lanes:	1 0	2 0	1	1 0	2 0	1	2 0	1 0	1	1 0	1 0	1
Volume Module:												
Base Vol:	175	2099	76	7	752	894	897	99	116	118	129	60
Growth Adj:	1.00	1.00	1.00	1.00	1.00	1.00	1.00	1.00	1.00	1.00	1.00	1.00
Initial Bse:	175	2099	76	7	752	894	897	99	116	118	129	60
Added Vol:	0	0	0	0	0	0	0	0	0	0	0	0
PasserByVol:	0	0	0	0	0	0	0	0	0	0	0	0
Initial Fut:	175	2099	76	7	752	894	897	99	116	118	129	60
User Adj:	1.00	1.00	1.00	1.00	1.00	1.00	1.00	1.00	1.00	1.00	1.00	1.00
PHF Adj:	1.00	1.00	1.00	1.00	1.00	1.00	1.00	1.00	1.00	1.00	1.00	1.00
PHF Volume:	175	2099	76	7	752	894	897	99	116	118	129	60
Reduct Vol:	0	0	0	0	0	0	0	0	0	0	0	0
Reduced Vol:	175	2099	76	7	752	894	897	99	116	118	129	60
PCE Adj:	1.00	1.00	1.00	1.00	1.00	1.00	1.00	1.00	1.00	1.00	1.00	1.00
MLF Adj:	1.00	1.00	1.00	1.00	1.00	1.00	1.00	1.00	1.00	1.00	1.00	1.00
FinalVolume:	175	2099	76	7	752	894	897	99	116	118	129	60
Saturation Flow Module:												
Sat/Lane:	1900	1900	1900	1900	1900	1900	1900	1900	1900	1900	1900	1900
Adjustment:	0.95	0.95	0.85	0.95	0.95	0.85	0.92	1.00	0.85	0.95	1.00	0.85
Lanes:	1.00	2.00	1.00	1.00	2.00	1.00	2.00	1.00	1.00	1.00	1.00	1.00
Final Sat.:	1805	3610	1615	1805	3610	1615	3502	1900	1615	1805	1900	1615
Capacity Analysis Module:												
Vol/Sat:	0.10	0.58	0.05	0.00	0.21	0.55	0.26	0.05	0.07	0.07	0.07	0.04
Crit Moves:		****		****			****				****	
Green/Cycle:	0.14	0.49	0.49	0.07	0.42	0.63	0.21	0.14	0.14	0.14	0.07	0.07
Volume/Cap:	0.71	1.20	0.10	0.06	0.50	0.87	1.20	0.36	0.50	0.47	0.97	0.53
Delay/Veh:	50.5	120	13.9	43.6	21.6	23.5	140.5	39.5	41.2	40.9	115	49.7
User DelAdj:	1.00	1.00	1.00	1.00	1.00	1.00	1.00	1.00	1.00	1.00	1.00	1.00
AdjDel/Veh:	50.5	120	13.9	43.6	21.6	23.5	140.5	39.5	41.2	40.9	115	49.7
LOS by Move:	D	F	B	D	C	C	F	D	D	D	F	D
HCM2kAvgQ:	7	58	1	0	9	26	27	3	4	4	7	3

Note: Queue reported is the number of cars per lane.

Traffix 7.9.0415 (c) 2007 Dowling Assoc. Licensed to MMA, LONG BEACH, CA

Overlook Parkway Extension
Future Alt 2 (Gates Opened - No Overlook)
PM Peak Hour

Level Of Service Computation Report
2000 HCM Operations Method (Future Volume Alternative)

Intersection #3 Madison St/Indiana Ave

Cycle (sec):	100	Critical Vol./Cap.(X):	1.152
Loss Time (sec):	16 (Y+R=4.0 sec)	Average Delay (sec/veh):	80.5
Optimal Cycle:	130	Level Of Service:	F

Street Name:	Madison St						Indiana Ave					
Approach:	North Bound			South Bound			East Bound			West Bound		
Movement:	L -	T -	R	L -	T -	R	L -	T -	R	L -	T -	R
Control:	Protected			Protected			Protected			Protected		
Rights:	Include			Include			Include			Ovl		
Min. Green:	7	7	7	7	7	7	7	7	7	7	7	7
Lanes:	1 0	1 1	0	1 0	1 1	0	1 0	1 1	0	1 0	2 0	1
Volume Module:												
Base Vol:	97	756	50	689	1165	301	401	692	94	55	500	690
Growth Adj:	1.00	1.00	1.00	1.00	1.00	1.00	1.00	1.00	1.00	1.00	1.00	1.00
Initial Bse:	97	756	50	689	1165	301	401	692	94	55	500	690
Added Vol:	0	0	0	0	0	0	0	0	0	0	0	0
PasserByVol:	0	0	0	0	0	0	0	0	0	0	0	0
Initial Fut:	97	756	50	689	1165	301	401	692	94	55	500	690
User Adj:	1.00	1.00	1.00	1.00	1.00	1.00	1.00	1.00	1.00	1.00	1.00	1.00
PHF Adj:	1.00	1.00	1.00	1.00	1.00	1.00	1.00	1.00	1.00	1.00	1.00	1.00
PHF Volume:	97	756	50	689	1165	301	401	692	94	55	500	690
Reduct Vol:	0	0	0	0	0	0	0	0	0	0	0	0
Reduced Vol:	97	756	50	689	1165	301	401	692	94	55	500	690
PCE Adj:	1.00	1.00	1.00	1.00	1.00	1.00	1.00	1.00	1.00	1.00	1.00	1.00
MLF Adj:	1.00	1.00	1.00	1.00	1.00	1.00	1.00	1.00	1.00	1.00	1.00	1.00
FinalVolume:	97	756	50	689	1165	301	401	692	94	55	500	690
Saturation Flow Module:												
Sat/Lane:	1900	1900	1900	1900	1900	1900	1900	1900	1900	1900	1900	1900
Adjustment:	0.95	0.94	0.94	0.95	0.92	0.92	0.95	0.93	0.93	0.95	0.95	0.85
Lanes:	1.00	1.88	0.12	1.00	1.59	0.41	1.00	1.76	0.24	1.00	2.00	1.00
Final Sat.:	1805	3356	222	1805	2780	718	1805	3121	424	1805	3610	1615
Capacity Analysis Module:												
Vol/Sat:	0.05	0.23	0.23	0.38	0.42	0.42	0.22	0.22	0.22	0.03	0.14	0.43
Crit Moves:		****		****			****				****	
Green/Cycle:	0.08	0.20	0.20	0.33	0.45	0.45	0.19	0.24	0.24	0.08	0.12	0.45
Volume/Cap:	0.71	1.15	1.15	1.15	0.93	0.93	1.15	0.93	0.93	0.41	1.15	0.95
Delay/Veh:	61.4	124	124.5	119.9	35.9	35.9	136.6	54.1	54.1	46.1	136	47.4
User DelAdj:	1.00	1.00	1.00	1.00	1.00	1.00	1.00	1.00	1.00	1.00	1.00	1.00
AdjDel/Veh:	61.4	124	124.5	119.9	35.9	35.9	136.6	54.1	54.1	46.1	136	47.4
LOS by Move:	E	F	F	F	D	D	F	D	D	D	F	D
HCM2kAvgQ:	4	23	23	36	27	27	22	17	17	2	16	26

Note: Queue reported is the number of cars per lane.

Traffix 7.9.0415 (c) 2007 Dowling Assoc. Licensed to MMA, LONG BEACH, CA

Overlook Parkway Extension
Future Alt 2 (Gates Opened - No Overlook)
PM Peak Hour

Level Of Service Computation Report
2000 HCM Operations Method (Future Volume Alternative)

Intersection #5 Madison St/Victoria Ave

Cycle (sec): 100 | Critical Vol./Cap.(X): 0.768
Loss Time (sec): 16 (Y+R=4.0 sec) | Average Delay (sec/veh): 33.9
Optimal Cycle: 80 | Level Of Service: C

Street Name:	Madison St						Victoria Ave					
Approach:	North Bound			South Bound			East Bound			West Bound		
Movement:	L -	T -	R	L -	T -	R	L -	T -	R	L -	T -	R
Control:	Split Phase			Split Phase			Split Phase			Split Phase		
Rights:	Include			Include			Include			Ovl		
Min. Green:	7	7	7	7	7	7	7	7	7	7	7	7
Lanes:	0 0	1! 0	0	1 0	0 1	0	0 0	1! 0	0	0 1	0 0	1
Volume Module:												
Base Vol:	5	110	30	567	337	26	42	258	15	17	143	263
Growth Adj:	1.00	1.00	1.00	1.00	1.00	1.00	1.00	1.00	1.00	1.00	1.00	1.00
Initial Bse:	5	110	30	567	337	26	42	258	15	17	143	263
Added Vol:	0	0	0	0	0	0	0	0	0	0	0	0
PasserByVol:	0	0	0	0	0	0	0	0	0	0	0	0
Initial Fut:	5	110	30	567	337	26	42	258	15	17	143	263
User Adj:	1.00	1.00	1.00	1.00	1.00	1.00	1.00	1.00	1.00	1.00	1.00	1.00
PHF Adj:	1.00	1.00	1.00	1.00	1.00	1.00	1.00	1.00	1.00	1.00	1.00	1.00
PHF Volume:	5	110	30	567	337	26	42	258	15	17	143	263
Reduct Vol:	0	0	0	0	0	0	0	0	0	0	0	0
Reduced Vol:	5	110	30	567	337	26	42	258	15	17	143	263
PCE Adj:	1.00	1.00	1.00	1.00	1.00	1.00	1.00	1.00	1.00	1.00	1.00	1.00
MLF Adj:	1.00	1.00	1.00	1.00	1.00	1.00	1.00	1.00	1.00	1.00	1.00	1.00
FinalVolume:	5	110	30	567	337	26	42	258	15	17	143	263
Saturation Flow Module:												
Sat/Lane:	1900	1900	1900	1900	1900	1900	1900	1900	1900	1900	1900	1900
Adjustment:	0.97	0.97	0.97	0.95	0.99	0.99	0.99	0.99	0.99	1.00	1.00	0.85
Lanes:	0.03	0.76	0.21	1.00	0.93	0.07	0.13	0.82	0.05	0.11	0.89	1.00
Final Sat.:	64	1398	381	1805	1745	135	250	1536	89	201	1690	1615
Capacity Analysis Module:												
Vol/Sat:	0.08	0.08	0.08	0.31	0.19	0.19	0.17	0.17	0.17	0.08	0.08	0.16
Crit Moves:	****			****			****			****		
Green/Cycle:	0.10	0.10	0.10	0.41	0.41	0.41	0.22	0.22	0.22	0.11	0.11	0.52
Volume/Cap:	0.77	0.77	0.77	0.77	0.47	0.47	0.77	0.77	0.77	0.77	0.77	0.31
Delay/Veh:	61.0	61.0	61.0	30.4	22.1	22.1	45.2	45.2	45.2	59.1	59.1	14.0
User DelAdj:	1.00	1.00	1.00	1.00	1.00	1.00	1.00	1.00	1.00	1.00	1.00	1.00
AdjDel/Veh:	61.0	61.0	61.0	30.4	22.1	22.1	45.2	45.2	45.2	59.1	59.1	14.0
LOS by Move:	E	E	E	C	C	C	D	D	D	E	E	B
HCM2kAvgQ:	6	6	6	16	8	8	11	11	11	7	7	5

Note: Queue reported is the number of cars per lane.

Traffix 7.9.0415 (c) 2007 Dowling Assoc. Licensed to MMA, LONG BEACH, CA

Overlook Parkway Extension
Future Alt 2 (Gates Opened - No Overlook)
PM Peak Hour

Level Of Service Computation Report
2000 HCM 4-Way Stop Method (Future Volume Alternative)

Intersection #7 Washington St/Lincoln Ave

Cycle (sec): 100 | Critical Vol./Cap.(X): 1.409
Loss Time (sec): 0 (Y+R=4.0 sec) | Average Delay (sec/veh): 117.5
Optimal Cycle: 0 | Level Of Service: F

Street Name:	Washington St						Lincoln Ave					
Approach:	North Bound			South Bound			East Bound			West Bound		
Movement:	L -	T -	R	L -	T -	R	L -	T -	R	L -	T -	R
Control:	Stop Sign			Stop Sign			Stop Sign			Stop Sign		
Rights:	Include			Include			Include			Include		
Min. Green:	7	7	7	7	7	7	7	7	7	7	7	7
Lanes:	1 0	0 1	0	1 0	0 1	0	0 1	0 0	1	0 1	0 0	1
Volume Module:												
Base Vol:	65	458	43	67	548	33	13	331	66	71	247	41
Growth Adj:	1.00	1.00	1.00	1.00	1.00	1.00	1.00	1.00	1.00	1.00	1.00	1.00
Initial Bse:	65	458	43	67	548	33	13	331	66	71	247	41
Added Vol:	0	0	0	0	0	0	0	0	0	0	0	0
PasserByVol:	0	0	0	0	0	0	0	0	0	0	0	0
Initial Fut:	65	458	43	67	548	33	13	331	66	71	247	41
User Adj:	1.00	1.00	1.00	1.00	1.00	1.00	1.00	1.00	1.00	1.00	1.00	1.00
PHF Adj:	1.00	1.00	1.00	1.00	1.00	1.00	1.00	1.00	1.00	1.00	1.00	1.00
PHF Volume:	65	458	43	67	548	33	13	331	66	71	247	41
Reduct Vol:	0	0	0	0	0	0	0	0	0	0	0	0
Reduced Vol:	65	458	43	67	548	33	13	331	66	71	247	41
PCE Adj:	1.00	1.00	1.00	1.00	1.00	1.00	1.00	1.00	1.00	1.00	1.00	1.00
MLF Adj:	1.00	1.00	1.00	1.00	1.00	1.00	1.00	1.00	1.00	1.00	1.00	1.00
FinalVolume:	65	458	43	67	548	33	13	331	66	71	247	41
Saturation Flow Module:												
Adjustment:	1.00	1.00	1.00	1.00	1.00	1.00	1.00	1.00	1.00	1.00	1.00	1.00
Lanes:	1.00	0.91	0.09	1.00	0.94	0.06	0.04	0.96	1.00	0.22	0.78	1.00
Final Sat.:	386	378	35	387	389	23	15	383	432	87	302	426
Capacity Analysis Module:												
Vol/Sat:	0.17	1.21	1.21	0.17	1.41	1.41	0.86	0.86	0.15	0.82	0.82	0.10
Crit Moves:		****			****		****				****	
Delay/Veh:	13.8	143	143.0	13.9	222	221.7	47.3	47.3	12.5	41.5	41.5	12.0
Delay Adj:	1.00	1.00	1.00	1.00	1.00	1.00	1.00	1.00	1.00	1.00	1.00	1.00
AdjDel/Veh:	13.8	143	143.0	13.9	222	221.7	47.3	47.3	12.5	41.5	41.5	12.0
LOS by Move:	B	F	F	B	F	F	E	E	B	E	E	B
ApproachDel:	128.1			200.2			41.7			38.1		
Delay Adj:	1.00			1.00			1.00			1.00		
ApprAdjDel:	128.1			200.2			41.7			38.1		
LOS by Appr:	F			F			E			E		
AllWayAvgQ:	0.2	15.1	15.1	0.2	24.1	24.1	3.9	3.9	0.2	3.2	3.2	0.1

Traffix 7.9.0415 (c) 2007 Dowling Assoc. Licensed to MMA, LONG BEACH, CA

Overlook Parkway Extension
Future Alt 2 (Gates Opened - No Overlook)
PM Peak Hour

Level Of Service Computation Report
2000 HCM Operations Method (Future Volume Alternative)

Intersection #8 Washington St/Victoria Ave

Cycle (sec):	100	Critical Vol./Cap.(X):	1.262
Loss Time (sec):	16 (Y+R=4.0 sec)	Average Delay (sec/veh):	163.9
Optimal Cycle:	130	Level Of Service:	F

Street Name:	Washington St						Victoria Ave					
Approach:	North Bound			South Bound			East Bound			West Bound		
Movement:	L	T	R	L	T	R	L	T	R	L	T	R
Control:	Split Phase			Split Phase			Split Phase			Split Phase		
Rights:	Include			Include			Ovl			Ovl		
Min. Green:	7	7	7	7	7	7	7	7	7	7	7	7
Lanes:	0 1	0 1	0	0 1	0 1	0	0 1	0 0	1	0 1	0 0	1
Volume Module:												
Base Vol:	306	550	408	1	678	3	3	139	695	668	103	9
Growth Adj:	1.00	1.00	1.00	1.00	1.00	1.00	1.00	1.00	1.00	1.00	1.00	1.00
Initial Bse:	306	550	408	1	678	3	3	139	695	668	103	9
Added Vol:	0	0	0	0	0	0	0	0	0	0	0	0
PasserByVol:	0	0	0	0	0	0	0	0	0	0	0	0
Initial Fut:	306	550	408	1	678	3	3	139	695	668	103	9
User Adj:	1.00	1.00	1.00	1.00	1.00	1.00	1.00	1.00	1.00	1.00	1.00	1.00
PHF Adj:	1.00	1.00	1.00	1.00	1.00	1.00	1.00	1.00	1.00	1.00	1.00	1.00
PHF Volume:	306	550	408	1	678	3	3	139	695	668	103	9
Reduct Vol:	0	0	0	0	0	0	0	0	0	0	0	0
Reduced Vol:	306	550	408	1	678	3	3	139	695	668	103	9
PCE Adj:	1.00	1.00	1.00	1.00	1.00	1.00	1.00	1.00	1.00	1.00	1.00	1.00
MLF Adj:	1.00	1.00	1.00	1.00	1.00	1.00	1.00	1.00	1.00	1.00	1.00	1.00
FinalVolume:	306	550	408	1	678	3	3	139	695	668	103	9
Saturation Flow Module:												
Sat/Lane:	1900	1900	1900	1900	1900	1900	1900	1900	1900	1900	1900	1900
Adjustment:	0.89	0.89	0.89	0.95	0.95	0.95	1.00	1.00	0.85	0.96	0.96	0.85
Lanes:	0.48	0.87	0.65	0.01	1.98	0.01	0.02	0.98	1.00	0.87	0.13	1.00
Final Sat.:	822	1477	1096	5	3585	16	40	1858	1615	1577	243	1615
Capacity Analysis Module:												
Vol/Sat:	0.37	0.37	0.37	0.19	0.19	0.19	0.07	0.07	0.43	0.42	0.42	0.01
Crit Moves:	****			****			****			****		
Green/Cycle:	0.29	0.29	0.29	0.15	0.15	0.15	0.07	0.07	0.36	0.33	0.33	0.48
Volume/Cap:	1.28	1.28	1.28	1.28	1.28	1.28	1.07	1.07	1.19	1.28	1.28	0.01
Delay/Veh:	168.9	169	168.9	182.2	182	182.2	144.2	144	134.5	171.5	172	13.7
User DelAdj:	1.00	1.00	1.00	1.00	1.00	1.00	1.00	1.00	1.00	1.00	1.00	1.00
AdjDel/Veh:	168.9	169	168.9	182.2	182	182.2	144.2	144	134.5	171.5	172	13.7
LOS by Move:	F	F	F	F	F	F	F	F	F	F	F	B
HCM2kAvgQ:	40	40	40	23	23	23	9	9	38	46	46	0

Note: Queue reported is the number of cars per lane.

Traffix 7.9.0415 (c) 2007 Dowling Assoc. Licensed to MMA, LONG BEACH, CA

Overlook Parkway Extension
Future Alt 2 (Gates Opened - No Overlook)
PM Peak Hour

Level Of Service Computation Report
2000 HCM Operations Method (Future Volume Alternative)

Intersection #12 Victoria Ave/Arlington Ave

Cycle (sec):	100	Critical Vol./Cap.(X):	1.037
Loss Time (sec):	16 (Y+R=4.0 sec)	Average Delay (sec/veh):	67.9
Optimal Cycle:	130	Level Of Service:	E

Street Name:	Victoria Ave						Arlington Ave					
Approach:	North Bound			South Bound			East Bound			West Bound		
Movement:	L	T	R	L	T	R	L	T	R	L	T	R
Control:	Protected			Protected			Protected			Protected		
Rights:	Ovl			Include			Include			Ovl		
Min. Green:	7	7	7	7	7	7	7	7	7	7	7	7
Lanes:	1 0	1 0	1	1 0	1 0	1	1 0	2 1	0	1 0	3 0	1
Volume Module:												
Base Vol:	19	255	430	172	377	210	216	2358	31	362	1804	101
Growth Adj:	1.00	1.00	1.00	1.00	1.00	1.00	1.00	1.00	1.00	1.00	1.00	1.00
Initial Bse:	19	255	430	172	377	210	216	2358	31	362	1804	101
Added Vol:	0	0	0	0	0	0	0	0	0	0	0	0
PasserByVol:	0	0	0	0	0	0	0	0	0	0	0	0
Initial Fut:	19	255	430	172	377	210	216	2358	31	362	1804	101
User Adj:	1.00	1.00	1.00	1.00	1.00	1.00	1.00	1.00	1.00	1.00	1.00	1.00
PHF Adj:	1.00	1.00	1.00	1.00	1.00	1.00	1.00	1.00	1.00	1.00	1.00	1.00
PHF Volume:	19	255	430	172	377	210	216	2358	31	362	1804	101
Reduct Vol:	0	0	0	0	0	0	0	0	0	0	0	0
Reduced Vol:	19	255	430	172	377	210	216	2358	31	362	1804	101
PCE Adj:	1.00	1.00	1.00	1.00	1.00	1.00	1.00	1.00	1.00	1.00	1.00	1.00
MLF Adj:	1.00	1.00	1.00	1.00	1.00	1.00	1.00	1.00	1.00	1.00	1.00	1.00
FinalVolume:	19	255	430	172	377	210	216	2358	31	362	1804	101
Saturation Flow Module:												
Sat/Lane:	1900	1900	1900	1900	1900	1900	1900	1900	1900	1900	1900	1900
Adjustment:	0.95	1.00	0.85	0.95	1.00	0.85	0.95	0.91	0.91	0.95	0.91	0.85
Lanes:	1.00	1.00	1.00	1.00	1.00	1.00	1.00	2.96	0.04	1.00	3.00	1.00
Final Sat.:	1805	1900	1615	1805	1900	1615	1805	5109	67	1805	5187	1615
Capacity Analysis Module:												
Vol/Sat:	0.01	0.13	0.27	0.10	0.20	0.13	0.12	0.46	0.46	0.20	0.35	0.06
Crit Moves:	****				****			****		****		
Green/Cycle:	0.07	0.14	0.32	0.10	0.18	0.18	0.15	0.41	0.41	0.18	0.44	0.54
Volume/Cap:	0.15	0.93	0.82	0.93	1.12	0.73	0.79	1.12	1.12	1.12	0.79	0.12
Delay/Veh:	44.3	77.6	41.1	90.1	126	48.2	55.1	89.3	89.3	126.6	25.9	11.2
User DelAdj:	1.00	1.00	1.00	1.00	1.00	1.00	1.00	1.00	1.00	1.00	1.00	1.00
AdjDel/Veh:	44.3	77.6	41.1	90.1	126	48.2	55.1	89.3	89.3	126.6	25.9	11.2
LOS by Move:	D	E	D	F	F	D	E	F	F	F	C	B
HCM2kAvgQ:	1	12	15	9	20	8	8	42	42	20	19	1

Note: Queue reported is the number of cars per lane.

Traffix 7.9.0415 (c) 2007 Dowling Assoc. Licensed to MMA, LONG BEACH, CA

```
Future Alt 2 PM            Wed Apr 25, 2012 07:48:09                Page 11-1
-------------------------------------------------------------------------------
                           Overlook Parkway Extension
                    Future Alt 2 (Gates Opened - No Overlook)
                                  PM Peak Hour
-------------------------------------------------------------------------------
                         Level Of Service Computation Report
             2000 HCM Operations Method (Future Volume Alternative)
*******************************************************************************
Intersection #19 Trautwein Rd/John F. Kennedy Dr
*******************************************************************************
Cycle (sec):         100                 Critical Vol./Cap.(X):         0.931
Loss Time (sec):      16 (Y+R=4.0 sec)  Average Delay (sec/veh):        36.3
Optimal Cycle:       130                 Level Of Service:                 D
*******************************************************************************
Street Name:           Trautwein Rd                   John F. Kennedy Dr
Approach:      North Bound      South Bound       East Bound       West Bound
Movement:     L  -  T  -  R    L  -  T  -  R    L  -  T  -  R    L  -  T  -  R
------------|---------------||---------------||---------------||---------------|
Control:        Protected        Protected        Protected        Protected
Rights:           Include           Ovl             Include          Include
Min. Green:     7    7    7     7    7    7     7    7    7     7    7    7
Lanes:        1  0  2  0  1    1  0  2  0  1    2  0  1  0  1    1  0  1  0  1
------------|---------------||---------------||---------------||---------------|
Volume Module:
Base Vol:     105 1314    87    51 1921   678   562   71   181    63   60    28
Growth Adj:  1.00 1.00  1.00  1.00 1.00  1.00  1.00 1.00  1.00  1.00 1.00  1.00
Initial Bse:  105 1314    87    51 1921   678   562   71   181    63   60    28
Added Vol:      0    0     0     0    0     0     0    0     0     0    0     0
PasserByVol:    0    0     0     0    0     0     0    0     0     0    0     0
Initial Fut:  105 1314    87    51 1921   678   562   71   181    63   60    28
User Adj:    1.00 1.00  1.00  1.00 1.00  1.00  1.00 1.00  1.00  1.00 1.00  1.00
PHF Adj:     1.00 1.00  1.00  1.00 1.00  1.00  1.00 1.00  1.00  1.00 1.00  1.00
PHF Volume:   105 1314    87    51 1921   678   562   71   181    63   60    28
Reduct Vol:     0    0     0     0    0     0     0    0     0     0    0     0
Reduced Vol:  105 1314    87    51 1921   678   562   71   181    63   60    28
PCE Adj:     1.00 1.00  1.00  1.00 1.00  1.00  1.00 1.00  1.00  1.00 1.00  1.00
MLF Adj:     1.00 1.00  1.00  1.00 1.00  1.00  1.00 1.00  1.00  1.00 1.00  1.00
FinalVolume:  105 1314    87    51 1921   678   562   71   181    63   60    28
------------|---------------||---------------||---------------||---------------|
Saturation Flow Module:
Sat/Lane:    1900 1900  1900  1900 1900  1900  1900 1900  1900  1900 1900  1900
Adjustment:  0.95 0.95  0.85  0.95 0.95  0.85  0.92 1.00  0.85  0.95 1.00  0.85
Lanes:       1.00 2.00  1.00  1.00 2.00  1.00  2.00 1.00  1.00  1.00 1.00  1.00
Final Sat.:  1805 3610  1615  1805 3610  1615  3502 1900  1615  1805 1900  1615
------------|---------------||---------------||---------------||---------------|
Capacity Analysis Module:
Vol/Sat:     0.06 0.36  0.05  0.03 0.53  0.42  0.16 0.04  0.11  0.03 0.03  0.02
Crit Moves:  ****                 ****        ****                 ****
Green/Cycle: 0.07 0.51  0.51  0.10 0.54  0.70  0.16 0.14  0.14  0.09 0.07  0.07
Volume/Cap:  0.83 0.71  0.11  0.29 0.99  0.60  0.99 0.26  0.78  0.39 0.45  0.25
Delay/Veh:   80.9 20.2  12.8  42.8 40.7   8.7  76.8 38.7  57.4  44.5 47.1  45.2
User DelAdj: 1.00 1.00  1.00  1.00 1.00  1.00  1.00 1.00  1.00  1.00 1.00  1.00
AdjDel/Veh:  80.9 20.2  12.8  42.8 40.7   8.7  76.8 38.7  57.4  44.5 47.1  45.2
LOS by Move:   F    C     B     D    D     A     E    D     E     D    D     D
HCM2kAvgQ:      5   17     1     2   38    11    14    2     7     2    2     1
*******************************************************************************
Note: Queue reported is the number of cars per lane.

  Traffix 7.9.0415 (c) 2007 Dowling Assoc. Licensed to MMA, LONG BEACH, CA
```


APPENDIX C:
TRAFFIX WORKSHEETS
2035 CONDITIONS – GATES CLOSED
MITIGATION SCENARIO 3 (2035 GATES CLOSED)

Overlook Parkway Extension
Future Alt 3 (Gates Opened - With Overlook)
AM Peak Hour

Level Of Service Computation Report
2000 HCM Operations Method (Future Volume Alternative)

Intersection #3 Madison St/Indiana Ave

Cycle (sec):	100	Critical Vol./Cap.(X):	0.998
Loss Time (sec):	16 (Y+R=4.0 sec)	Average Delay (sec/veh):	65.2
Optimal Cycle:	130	Level Of Service:	E

Street Name:	Madison St						Indiana Ave					
Approach:	North Bound			South Bound			East Bound			West Bound		
Movement:	L - T - R			L - T - R			L - T - R			L - T - R		
Control:	Protected			Protected			Protected			Protected		
Rights:	Include			Include			Include			Ovl		
Min. Green:	7	7	7	7	7	7	7	7	7	7	7	7
Lanes:	1 0	1 1	0	1 0	1 1	0	1 0	1 1	0	1 0	2 0	1
Volume Module:												
Base Vol:	72	821	41	731	480	393	226	640	26	13	273	610
Growth Adj:	1.00	1.00	1.00	1.00	1.00	1.00	1.00	1.00	1.00	1.00	1.00	1.00
Initial Bse:	72	821	41	731	480	393	226	640	26	13	273	610
Added Vol:	0	0	0	0	0	0	0	0	0	0	0	0
PasserByVol:	0	0	0	0	0	0	0	0	0	0	0	0
Initial Fut:	72	821	41	731	480	393	226	640	26	13	273	610
User Adj:	1.00	1.00	1.00	1.00	1.00	1.00	1.00	1.00	1.00	1.00	1.00	1.00
PHF Adj:	1.00	1.00	1.00	1.00	1.00	1.00	1.00	1.00	1.00	1.00	1.00	1.00
PHF Volume:	72	821	41	731	480	393	226	640	26	13	273	610
Reduct Vol:	0	0	0	0	0	0	0	0	0	0	0	0
Reduced Vol:	72	821	41	731	480	393	226	640	26	13	273	610
PCE Adj:	1.00	1.00	1.00	1.00	1.00	1.00	1.00	1.00	1.00	1.00	1.00	1.00
MLF Adj:	1.00	1.00	1.00	1.00	1.00	1.00	1.00	1.00	1.00	1.00	1.00	1.00
FinalVolume:	72	821	41	731	480	393	226	640	26	13	273	610
Saturation Flow Module:												
Sat/Lane:	1900	1900	1900	1900	1900	1900	1900	1900	1900	1900	1900	1900
Adjustment:	0.95	0.94	0.94	0.95	0.89	0.89	0.95	0.94	0.94	0.95	0.95	0.85
Lanes:	1.00	1.90	0.10	1.00	1.10	0.90	1.00	1.92	0.08	1.00	2.00	1.00
Final Sat.:	1805	3414	171	1805	1852	1516	1805	3448	140	1805	3610	1615
Capacity Analysis Module:												
Vol/Sat:	0.04	0.24	0.24	0.40	0.26	0.26	0.13	0.19	0.19	0.01	0.08	0.38
Crit Moves:		****		****				****		****		
Green/Cycle:	0.13	0.22	0.22	0.38	0.47	0.47	0.15	0.17	0.17	0.07	0.09	0.47
Volume/Cap:	0.31	1.08	1.08	1.08	0.55	0.55	0.83	1.08	1.08	0.10	0.83	0.81
Delay/Veh:	40.5	94.3	94.3	89.2	19.3	19.3	60.1	101	100.9	43.9	60.8	29.5
User DelAdj:	1.00	1.00	1.00	1.00	1.00	1.00	1.00	1.00	1.00	1.00	1.00	1.00
AdjDel/Veh:	40.5	94.3	94.3	89.2	19.3	19.3	60.1	101	100.9	43.9	60.8	29.5
LOS by Move:	D	F	F	F	B	B	E	F	F	D	E	C
HCM2kAvgQ:	2	22	22	34	10	10	9	18	18	0	7	18

Note: Queue reported is the number of cars per lane.

Traffix 7.9.0415 (c) 2007 Dowling Assoc. Licensed to MMA, LONG BEACH, CA

Overlook Parkway Extension
Future Alt 3 (Gates Opened - With Overlook)
AM Peak Hour

Level Of Service Computation Report
2000 HCM Operations Method (Future Volume Alternative)

Intersection #5 Madison St/Victoria Ave

Cycle (sec):	100	Critical Vol./Cap.(X):	0.702
Loss Time (sec):	16 (Y+R=4.0 sec)	Average Delay (sec/veh):	38.6
Optimal Cycle:	69	Level Of Service:	D

Street Name:	Madison St						Victoria Ave					
Approach:	North Bound			South Bound			East Bound			West Bound		
Movement:	L - T - R			L - T - R			L - T - R			L - T - R		
Control:	Split Phase			Split Phase			Split Phase			Split Phase		
Rights:	Include			Include			Include			Ovl		
Min. Green:	7	7	7	7	7	7	7	7	7	7	7	7
Lanes:	0 0	1! 0	0	1 0	0 1	0	0 0	1! 0	0	0 1	0 0	1
Volume Module:												
Base Vol:	16	239	38	221	51	25	46	272	2	4	262	420
Growth Adj:	1.00	1.00	1.00	1.00	1.00	1.00	1.00	1.00	1.00	1.00	1.00	1.00
Initial Bse:	16	239	38	221	51	25	46	272	2	4	262	420
Added Vol:	0	0	0	0	0	0	0	0	0	0	0	0
PasserByVol:	0	0	0	0	0	0	0	0	0	0	0	0
Initial Fut:	16	239	38	221	51	25	46	272	2	4	262	420
User Adj:	1.00	1.00	1.00	1.00	1.00	1.00	1.00	1.00	1.00	1.00	1.00	1.00
PHF Adj:	1.00	1.00	1.00	1.00	1.00	1.00	1.00	1.00	1.00	1.00	1.00	1.00
PHF Volume:	16	239	38	221	51	25	46	272	2	4	262	420
Reduct Vol:	0	0	0	0	0	0	0	0	0	0	0	0
Reduced Vol:	16	239	38	221	51	25	46	272	2	4	262	420
PCE Adj:	1.00	1.00	1.00	1.00	1.00	1.00	1.00	1.00	1.00	1.00	1.00	1.00
MLF Adj:	1.00	1.00	1.00	1.00	1.00	1.00	1.00	1.00	1.00	1.00	1.00	1.00
FinalVolume:	16	239	38	221	51	25	46	272	2	4	262	420
Saturation Flow Module:												
Sat/Lane:	1900	1900	1900	1900	1900	1900	1900	1900	1900	1900	1900	1900
Adjustment:	0.98	0.98	0.98	0.95	0.95	0.95	0.99	0.99	0.99	1.00	1.00	0.85
Lanes:	0.05	0.82	0.13	1.00	0.67	0.33	0.14	0.85	0.01	0.02	0.98	1.00
Final Sat.:	102	1517	241	1805	1213	594	271	1602	12	29	1870	1615
Capacity Analysis Module:												
Vol/Sat:	0.16	0.16	0.16	0.12	0.04	0.04	0.17	0.17	0.17	0.14	0.14	0.26
Crit Moves:			****	****					****		****	
Green/Cycle:	0.22	0.22	0.22	0.17	0.17	0.17	0.24	0.24	0.24	0.20	0.20	0.37
Volume/Cap:	0.70	0.70	0.70	0.70	0.24	0.24	0.70	0.70	0.70	0.70	0.70	0.70
Delay/Veh:	41.0	41.0	41.0	45.8	36.0	36.0	39.5	39.5	39.5	43.1	43.1	30.0
User DelAdj:	1.00	1.00	1.00	1.00	1.00	1.00	1.00	1.00	1.00	1.00	1.00	1.00
AdjDel/Veh:	41.0	41.0	41.0	45.8	36.0	36.0	39.5	39.5	39.5	43.1	43.1	30.0
LOS by Move:	D	D	D	D	D	D	D	D	D	D	D	C
HCM2kAvgQ:	10	10	10	8	2	2	10	10	10	9	9	12

Note: Queue reported is the number of cars per lane.

Traffix 7.9.0415 (c) 2007 Dowling Assoc. Licensed to MMA, LONG BEACH, CA

Overlook Parkway Extension
Future Alt 3 (Gates Opened - With Overlook)
AM Peak Hour

Level Of Service Computation Report
2000 HCM 4-Way Stop Method (Future Volume Alternative)

Intersection #7 Washington St/Lincoln Ave

Cycle (sec):	100	Critical Vol./Cap.(X):	1.926
Loss Time (sec):	0 (Y+R=4.0 sec)	Average Delay (sec/veh):	205.9
Optimal Cycle:	0	Level Of Service:	F

Street Name:	Washington St					Lincoln Ave					
Approach:	North Bound			South Bound			East Bound			West Bound	
Movement:	L - T - R			L - T - R			L - T - R			L - T - R	
Control:	Stop Sign			Stop Sign			Stop Sign			Stop Sign	
Rights:	Include			Include			Include			Include	
Min. Green:	7	7	7	7	7	7	7	7	7	7	7	7
Lanes:	1 0	0 1	0	1 0	0 1	0	0 1	0 0	1	0 1	0 0	1
Volume Module:												
Base Vol:	74	815	38	49	367	22	21	325	40	44	191	53
Growth Adj:	1.00	1.00	1.00	1.00	1.00	1.00	1.00	1.00	1.00	1.00	1.00	1.00
Initial Bse:	74	815	38	49	367	22	21	325	40	44	191	53
Added Vol:	0	0	0	0	0	0	0	0	0	0	0	0
PasserByVol:	0	0	0	0	0	0	0	0	0	0	0	0
Initial Fut:	74	815	38	49	367	22	21	325	40	44	191	53
User Adj:	1.00	1.00	1.00	1.00	1.00	1.00	1.00	1.00	1.00	1.00	1.00	1.00
PHF Adj:	1.00	1.00	1.00	1.00	1.00	1.00	1.00	1.00	1.00	1.00	1.00	1.00
PHF Volume:	74	815	38	49	367	22	21	325	40	44	191	53
Reduct Vol:	0	0	0	0	0	0	0	0	0	0	0	0
Reduced Vol:	74	815	38	49	367	22	21	325	40	44	191	53
PCE Adj:	1.00	1.00	1.00	1.00	1.00	1.00	1.00	1.00	1.00	1.00	1.00	1.00
MLF Adj:	1.00	1.00	1.00	1.00	1.00	1.00	1.00	1.00	1.00	1.00	1.00	1.00
FinalVolume:	74	815	38	49	367	22	21	325	40	44	191	53
Saturation Flow Module:												
Adjustment:	1.00	1.00	1.00	1.00	1.00	1.00	1.00	1.00	1.00	1.00	1.00	1.00
Lanes:	1.00	0.96	0.04	1.00	0.94	0.06	0.06	0.94	1.00	0.19	0.81	1.00
Final Sat.:	412	423	20	405	408	24	25	392	454	73	319	428
Capacity Analysis Module:												
Vol/Sat:	0.18	1.93	1.93	0.12	0.90	0.90	0.83	0.83	0.09	0.60	0.60	0.12
Crit Moves:		****			****			****			****	
Delay/Veh:	13.2	444	443.8	12.7	49.4	49.4	39.9	39.9	11.2	23.4	23.4	11.9
Delay Adj:	1.00	1.00	1.00	1.00	1.00	1.00	1.00	1.00	1.00	1.00	1.00	1.00
AdjDel/Veh:	13.2	444	443.8	12.7	49.4	49.4	39.9	39.9	11.2	23.4	23.4	11.9
LOS by Move:	B	F	F	B	E	E	E	E	B	C	C	B
ApproachDel:	409.5			45.3			36.9			21.3		
Delay Adj:	1.00			1.00			1.00			1.00		
ApprAdjDel:	409.5			45.3			36.9			21.3		
LOS by Appr:	F			E			E			C		
AllWayAvgQ:	0.2	53.3	53.3	0.1	4.6	4.6	3.3	3.3	0.1	1.3	1.3	0.1

Traffix 7.9.0415 (c) 2007 Dowling Assoc. Licensed to MMA, LONG BEACH, CA

Overlook Parkway Extension
Future Alt 3 (Gates Opened - With Overlook)
AM Peak Hour

Level Of Service Computation Report
2000 HCM Operations Method (Future Volume Alternative)

Intersection #8 Washington St/Victoria Ave

Cycle (sec):	100	Critical Vol./Cap.(X):	1.305
Loss Time (sec):	16 (Y+R=4.0 sec)	Average Delay (sec/veh):	167.6
Optimal Cycle:	130	Level Of Service:	F

Street Name:	Washington St					Victoria Ave					
Approach:	North Bound			South Bound			East Bound			West Bound	
Movement:	L - T - R			L - T - R			L - T - R			L - T - R	
Control:	Split Phase			Split Phase			Split Phase			Split Phase	
Rights:	Include			Include			Ovl			Ovl	
Min. Green:	7	7	7	7	7	7	7	7	7	7	7	7
Lanes:	0 1	0 1	0	0 1	0 1	0	0 1	0 0	1	0 1	0 0	1
Volume Module:												
Base Vol:	553	914	694	7	424	8	9	137	323	349	127	11
Growth Adj:	1.00	1.00	1.00	1.00	1.00	1.00	1.00	1.00	1.00	1.00	1.00	1.00
Initial Bse:	553	914	694	7	424	8	9	137	323	349	127	11
Added Vol:	0	0	0	0	0	0	0	0	0	0	0	0
PasserByVol:	0	0	0	0	0	0	0	0	0	0	0	0
Initial Fut:	553	914	694	7	424	8	9	137	323	349	127	11
User Adj:	1.00	1.00	1.00	1.00	1.00	1.00	1.00	1.00	1.00	1.00	1.00	1.00
PHF Adj:	1.00	1.00	1.00	1.00	1.00	1.00	1.00	1.00	1.00	1.00	1.00	1.00
PHF Volume:	553	914	694	7	424	8	9	137	323	349	127	11
Reduct Vol:	0	0	0	0	0	0	0	0	0	0	0	0
Reduced Vol:	553	914	694	7	424	8	9	137	323	349	127	11
PCE Adj:	1.00	1.00	1.00	1.00	1.00	1.00	1.00	1.00	1.00	1.00	1.00	1.00
MLF Adj:	1.00	1.00	1.00	1.00	1.00	1.00	1.00	1.00	1.00	1.00	1.00	1.00
FinalVolume:	553	914	694	7	424	8	9	137	323	349	127	11
Saturation Flow Module:												
Sat/Lane:	1900	1900	1900	1900	1900	1900	1900	1900	1900	1900	1900	1900
Adjustment:	0.89	0.89	0.89	0.95	0.95	0.95	1.00	1.00	0.85	0.97	0.97	0.85
Lanes:	0.51	0.85	0.64	0.03	1.93	0.04	0.06	0.94	1.00	0.73	0.27	1.00
Final Sat.:	868	1435	1089	57	3473	66	117	1778	1615	1344	489	1615
Capacity Analysis Module:												
Vol/Sat:	0.64	0.64	0.64	0.12	0.12	0.12	0.08	0.08	0.20	0.26	0.26	0.01
Crit Moves:		****		****				****		****		
Green/Cycle:	0.48	0.48	0.48	0.09	0.09	0.09	0.07	0.07	0.55	0.20	0.20	0.29
Volume/Cap:	1.32	1.32	1.32	1.32	1.32	1.32	1.10	1.10	0.36	1.32	1.32	0.02
Delay/Veh:	175.7	176	175.7	210.4	210	210.4	154.3	154	12.8	203.8	204	25.5
User DelAdj:	1.00	1.00	1.00	1.00	1.00	1.00	1.00	1.00	1.00	1.00	1.00	1.00
AdjDel/Veh:	175.7	176	175.7	210.4	210	210.4	154.3	154	12.8	203.8	204	25.5
LOS by Move:	F	F	F	F	F	F	F	F	B	F	F	C
HCM2kAvgQ:	70	70	70	16	16	16	9	9	6	31	31	0

Note: Queue reported is the number of cars per lane.

Traffix 7.9.0415 (c) 2007 Dowling Assoc. Licensed to MMA, LONG BEACH, CA

Overlook Parkway Extension
Future Alt 3 (Gates Opened - With Overlook)
AM Peak Hour

Level Of Service Computation Report
2000 HCM Operations Method (Future Volume Alternative)

Intersection #9 Washington St/Overlook Pkwy

Cycle (sec):	100	Critical Vol./Cap.(X):	0.952
Loss Time (sec):	12 (Y+R=4.0 sec)	Average Delay (sec/veh):	37.6
Optimal Cycle:	130	Level Of Service:	D

Street Name:	Washington St								Overlook Pkwy					
Approach:	North Bound			South Bound			East Bound			West Bound				
Movement:	L	T	R	L	T	R	L	T	R	L	T	R		
Control:	Protected			Protected			Protected			Protected				
Rights:	Include			Include			Include			Ovl				
Min. Green:	7	7	7	7	7	7	7	7	7	7	7	7		
Lanes:	0	0	1	1	0	2	0	2	0	0	0	0	0	0	1	0	0	0	2
Volume Module:														
Base Vol:	0	1950	44	566	626	0	0	0	0	36	0	806		
Growth Adj:	1.00	1.00	1.00	1.00	1.00	1.00	1.00	1.00	1.00	1.00	1.00	1.00		
Initial Bse:	0	1950	44	566	626	0	0	0	0	36	0	806		
Added Vol:	0	0	0	0	0	0	0	0	0	0	0	0		
PasserByVol:	0	0	0	0	0	0	0	0	0	0	0	0		
Initial Fut:	0	1950	44	566	626	0	0	0	0	36	0	806		
User Adj:	1.00	1.00	1.00	1.00	1.00	1.00	1.00	1.00	1.00	1.00	1.00	1.00		
PHF Adj:	1.00	1.00	1.00	1.00	1.00	1.00	1.00	1.00	1.00	1.00	1.00	1.00		
PHF Volume:	0	1950	44	566	626	0	0	0	0	36	0	806		
Reduct Vol:	0	0	0	0	0	0	0	0	0	0	0	0		
Reduced Vol:	0	1950	44	566	626	0	0	0	0	36	0	806		
PCE Adj:	1.00	1.00	1.00	1.00	1.00	1.00	1.00	1.00	1.00	1.00	1.00	1.00		
MLF Adj:	1.00	1.00	1.00	1.00	1.00	1.00	1.00	1.00	1.00	1.00	1.00	1.00		
FinalVolume:	0	1950	44	566	626	0	0	0	0	36	0	806		
Saturation Flow Module:														
Sat/Lane:	1900	1900	1900	1900	1900	1900	1900	1900	1900	1900	1900	1900		
Adjustment:	1.00	0.95	0.95	0.92	0.95	1.00	1.00	1.00	1.00	0.95	1.00	0.75		
Lanes:	0.00	1.96	0.04	2.00	2.00	0.00	0.00	0.00	0.00	1.00	0.00	2.00		
Final Sat.:	0	3520	79	3502	3610	0	0	0	0	1805	0	2842		
Capacity Analysis Module:														
Vol/Sat:	0.00	0.55	0.55	0.16	0.17	0.00	0.00	0.00	0.00	0.02	0.00	0.28		
Crit Moves:		****		****								****		
Green/Cycle:	0.00	0.58	0.58	0.17	0.54	0.00	0.00	0.00	0.00	0.10	0.00	0.30		
Volume/Cap:	0.00	0.95	0.95	0.95	0.32	0.00	0.00	0.00	0.00	0.20	0.00	0.95		
Delay/Veh:	0.0	30.1	30.1	66.5	13.1	0.0	0.0	0.0	0.0	42.0	0.0	54.5		
User DelAdj:	1.00	1.00	1.00	1.00	1.00	1.00	1.00	1.00	1.00	1.00	1.00	1.00		
AdjDel/Veh:	0.0	30.1	30.1	66.5	13.1	0.0	0.0	0.0	0.0	42.0	0.0	54.5		
LOS by Move:	A	C	C	E	B	A	A	A	A	D	A	D		
HCM2kAvgQ:	0	36	36	13	6	0	0	0	0	1	0	19		

Note: Queue reported is the number of cars per lane.

Traffix 7.9.0415 (c) 2007 Dowling Assoc. Licensed to MMA, LONG BEACH, CA

Overlook Parkway Extension
Future Alt 3 (Gates Opened - With Overlook)
AM Peak Hour

Level Of Service Computation Report
2000 HCM Operations Method (Future Volume Alternative)

Intersection #12 Victoria Ave/Arlington Ave

Cycle (sec):	100	Critical Vol./Cap.(X):	1.076
Loss Time (sec):	16 (Y+R=4.0 sec)	Average Delay (sec/veh):	64.8
Optimal Cycle:	130	Level Of Service:	E

Street Name:	Victoria Ave								Arlington Ave					
Approach:	North Bound			South Bound			East Bound			West Bound				
Movement:	L	T	R	L	T	R	L	T	R	L	T	R		
Control:	Protected			Protected			Protected			Protected				
Rights:	Ovl			Include			Include			Ovl				
Min. Green:	7	7	7	7	7	7	7	7	7	7	7	7		
Lanes:	1	0	1	0	1	1	0	1	0	1	1	0	2	1	0	1	0	3	0	1
Volume Module:														
Base Vol:	22	480	381	251	274	195	298	1323	6	320	1802	389		
Growth Adj:	1.00	1.00	1.00	1.00	1.00	1.00	1.00	1.00	1.00	1.00	1.00	1.00		
Initial Bse:	22	480	381	251	274	195	298	1323	6	320	1802	389		
Added Vol:	0	0	0	0	0	0	0	0	0	0	0	0		
PasserByVol:	0	0	0	0	0	0	0	0	0	0	0	0		
Initial Fut:	22	480	381	251	274	195	298	1323	6	320	1802	389		
User Adj:	1.00	1.00	1.00	1.00	1.00	1.00	1.00	1.00	1.00	1.00	1.00	1.00		
PHF Adj:	1.00	1.00	1.00	1.00	1.00	1.00	1.00	1.00	1.00	1.00	1.00	1.00		
PHF Volume:	22	480	381	251	274	195	298	1323	6	320	1802	389		
Reduct Vol:	0	0	0	0	0	0	0	0	0	0	0	0		
Reduced Vol:	22	480	381	251	274	195	298	1323	6	320	1802	389		
PCE Adj:	1.00	1.00	1.00	1.00	1.00	1.00	1.00	1.00	1.00	1.00	1.00	1.00		
MLF Adj:	1.00	1.00	1.00	1.00	1.00	1.00	1.00	1.00	1.00	1.00	1.00	1.00		
FinalVolume:	22	480	381	251	274	195	298	1323	6	320	1802	389		
Saturation Flow Module:														
Sat/Lane:	1900	1900	1900	1900	1900	1900	1900	1900	1900	1900	1900	1900		
Adjustment:	0.95	1.00	0.85	0.95	1.00	0.85	0.95	0.91	0.91	0.95	0.91	0.85		
Lanes:	1.00	1.00	1.00	1.00	1.00	1.00	1.00	2.99	0.01	1.00	3.00	1.00		
Final Sat.:	1805	1900	1615	1805	1900	1615	1805	5158	23	1805	5187	1615		
Capacity Analysis Module:														
Vol/Sat:	0.01	0.25	0.24	0.14	0.14	0.12	0.17	0.26	0.26	0.18	0.35	0.24		
Crit Moves:		****		****			****				****			
Green/Cycle:	0.12	0.23	0.43	0.13	0.24	0.24	0.15	0.28	0.28	0.19	0.32	0.45		
Volume/Cap:	0.10	1.08	0.55	1.08	0.59	0.49	1.08	0.91	0.91	0.91	1.08	0.53		
Delay/Veh:	39.5	103	22.3	124.3	35.3	33.4	118.2	43.6	43.6	66.3	79.6	20.5		
User DelAdj:	1.00	1.00	1.00	1.00	1.00	1.00	1.00	1.00	1.00	1.00	1.00	1.00		
AdjDel/Veh:	39.5	103	22.3	124.3	35.3	33.4	118.2	43.6	43.6	66.3	79.6	20.5		
LOS by Move:	D	F	C	F	D	C	F	D	D	E	E	C		
HCM2kAvgQ:	1	23	9	14	8	6	16	18	18	13	31	9		

Note: Queue reported is the number of cars per lane.

Traffix 7.9.0415 (c) 2007 Dowling Assoc. Licensed to MMA, LONG BEACH, CA

Overlook Parkway Extension
Future Alt 3 (Gates Opened - With Overlook)
AM Peak Hour

Level Of Service Computation Report
2000 HCM Operations Method (Future Volume Alternative)

Intersection #16 Crystal View Ter/Overlook Pkwy

Cycle (sec):	100	Critical Vol./Cap.(X):	0.299
Loss Time (sec):	8 (Y+R=4.0 sec)	Average Delay (sec/veh):	6.8
Optimal Cycle:	24	Level Of Service:	A

Street Name:	Crystal View Ter						Overlook Pkwy					
Approach:	North Bound			South Bound			East Bound			West Bound		
Movement:	L -	T -	R	L -	T -	R	L -	T -	R	L -	T -	R
Control:	Permitted			Permitted			Permitted			Permitted		
Rights:	Include			Include			Include			Include		
Min. Green:	7	7	7	7	7	7	7	7	7	7	7	7
Lanes:	0 0	1! 0	0	0 0	1! 0	0	1 0	1 1	0	1 0	1 1	0
Volume Module:												
Base Vol:	70	0	18	0	0	0	0	658	29	2	772	0
Growth Adj:	1.00	1.00	1.00	1.00	1.00	1.00	1.00	1.00	1.00	1.00	1.00	1.00
Initial Bse:	70	0	18	0	0	0	0	658	29	2	772	0
Added Vol:	0	0	0	0	0	0	0	0	0	0	0	0
PasserByVol:	0	0	0	0	0	0	0	0	0	0	0	0
Initial Fut:	70	0	18	0	0	0	0	658	29	2	772	0
User Adj:	1.00	1.00	1.00	1.00	1.00	1.00	1.00	1.00	1.00	1.00	1.00	1.00
PHF Adj:	1.00	1.00	1.00	1.00	1.00	1.00	1.00	1.00	1.00	1.00	1.00	1.00
PHF Volume:	70	0	18	0	0	0	0	658	29	2	772	0
Reduct Vol:	0	0	0	0	0	0	0	0	0	0	0	0
Reduced Vol:	70	0	18	0	0	0	0	658	29	2	772	0
PCE Adj:	1.00	1.00	1.00	1.00	1.00	1.00	1.00	1.00	1.00	1.00	1.00	1.00
MLF Adj:	1.00	1.00	1.00	1.00	1.00	1.00	1.00	1.00	1.00	1.00	1.00	1.00
FinalVolume:	70	0	18	0	0	0	0	658	29	2	772	0
Saturation Flow Module:												
Sat/Lane:	1900	1900	1900	1900	1900	1900	1900	1900	1900	1900	1900	1900
Adjustment:	0.76	1.00	0.76	1.00	1.00	1.00	1.00	0.94	0.94	0.37	0.95	0.95
Lanes:	0.80	0.00	0.20	0.00	1.00	0.00	1.00	1.92	0.08	1.00	2.00	0.00
Final Sat.:	1141	0	294	0	1900	0	1900	3437	151	697	3610	0
Capacity Analysis Module:												
Vol/Sat:	0.06	0.00	0.06	0.00	0.00	0.00	0.00	0.19	0.19	0.00	0.21	0.00
Crit Moves:	****										****	
Green/Cycle:	0.21	0.00	0.21	0.00	0.00	0.00	0.00	0.71	0.71	0.71	0.71	0.00
Volume/Cap:	0.30	0.00	0.30	0.00	0.00	0.00	0.00	0.27	0.27	0.00	0.30	0.00
Delay/Veh:	34.2	0.0	34.2	0.0	0.0	0.0	0.0	5.1	5.1	4.1	5.2	0.0
User DelAdj:	1.00	1.00	1.00	1.00	1.00	1.00	1.00	1.00	1.00	1.00	1.00	1.00
AdjDel/Veh:	34.2	0.0	34.2	0.0	0.0	0.0	0.0	5.1	5.1	4.1	5.2	0.0
LOS by Move:	C	A	C	A	A	A	A	A	A	A	A	A
HCM2kAvgQ:	2	0	2	0	0	0	0	4	4	0	5	0

Note: Queue reported is the number of cars per lane.

Traffix 7.9.0415 (c) 2007 Dowling Assoc. Licensed to MMA, LONG BEACH, CA

Overlook Parkway Extension
Future Alt 3 (Gates Opened - With Overlook)
AM Peak Hour

Level Of Service Computation Report
2000 HCM Operations Method (Future Volume Alternative)

Intersection #17 Kingdom Dr/Overlook Pkwy

Cycle (sec):	100	Critical Vol./Cap.(X):	0.367
Loss Time (sec):	8 (Y+R=4.0 sec)	Average Delay (sec/veh):	13.5
Optimal Cycle:	26	Level Of Service:	B

Street Name:	Kingdom Dr						Overlook Pkwy					
Approach:	North Bound			South Bound			East Bound			West Bound		
Movement:	L -	T -	R	L -	T -	R	L -	T -	R	L -	T -	R
Control:	Permitted			Permitted			Permitted			Permitted		
Rights:	Include			Include			Include			Include		
Min. Green:	7	7	7	7	7	7	7	7	7	7	7	7
Lanes:	0 0	1! 0	0	1 0	0 0	0	1 0	1 1	0	1 0	1 1	0
Volume Module:												
Base Vol:	82	0	120	6	0	0	0	577	43	42	745	0
Growth Adj:	1.00	1.00	1.00	1.00	1.00	1.00	1.00	1.00	1.00	1.00	1.00	1.00
Initial Bse:	82	0	120	6	0	0	0	577	43	42	745	0
Added Vol:	0	0	0	0	0	0	0	0	0	0	0	0
PasserByVol:	0	0	0	0	0	0	0	0	0	0	0	0
Initial Fut:	82	0	120	6	0	0	0	577	43	42	745	0
User Adj:	1.00	1.00	1.00	1.00	1.00	1.00	1.00	1.00	1.00	1.00	1.00	1.00
PHF Adj:	1.00	1.00	1.00	1.00	1.00	1.00	1.00	1.00	1.00	1.00	1.00	1.00
PHF Volume:	82	0	120	6	0	0	0	577	43	42	745	0
Reduct Vol:	0	0	0	0	0	0	0	0	0	0	0	0
Reduced Vol:	82	0	120	6	0	0	0	577	43	42	745	0
PCE Adj:	1.00	1.00	1.00	1.00	1.00	1.00	1.00	1.00	1.00	1.00	1.00	1.00
MLF Adj:	1.00	1.00	1.00	1.00	1.00	1.00	1.00	1.00	1.00	1.00	1.00	1.00
FinalVolume:	82	0	120	6	0	0	0	577	43	42	745	0
Saturation Flow Module:												
Sat/Lane:	1900	1900	1900	1900	1900	1900	1900	1900	1900	1900	1900	1900
Adjustment:	0.81	1.00	0.81	0.87	1.00	1.00	1.00	0.94	0.94	0.37	0.95	0.95
Lanes:	0.41	0.00	0.59	1.00	0.00	0.00	1.00	1.86	0.14	1.00	2.00	0.00
Final Sat.:	623	0	912	1647	0	0	1900	3326	248	701	3610	0
Capacity Analysis Module:												
Vol/Sat:	0.13	0.00	0.13	0.00	0.00	0.00	0.00	0.17	0.17	0.06	0.21	0.00
Crit Moves:	****										****	
Green/Cycle:	0.36	0.00	0.36	0.36	0.00	0.00	0.00	0.56	0.56	0.56	0.56	0.00
Volume/Cap:	0.37	0.00	0.37	0.01	0.00	0.00	0.00	0.31	0.31	0.11	0.37	0.00
Delay/Veh:	24.1	0.0	24.1	20.7	0.0	0.0	0.0	11.7	11.7	10.3	12.2	0.0
User DelAdj:	1.00	1.00	1.00	1.00	1.00	1.00	1.00	1.00	1.00	1.00	1.00	1.00
AdjDel/Veh:	24.1	0.0	24.1	20.7	0.0	0.0	0.0	11.7	11.7	10.3	12.2	0.0
LOS by Move:	C	A	C	C	A	A	A	B	B	B	B	A
HCM2kAvgQ:	5	0	5	0	0	0	0	5	5	1	7	0

Note: Queue reported is the number of cars per lane.

Traffix 7.9.0415 (c) 2007 Dowling Assoc. Licensed to MMA, LONG BEACH, CA

Overlook Parkway Extension
Future Alt 3 (Gates Opened - With Overlook)
AM Peak Hour

Level Of Service Computation Report
2000 HCM Operations Method (Future Volume Alternative)

Intersection #19 Trautwein Rd/John F. Kennedy Dr

Cycle (sec):	100	Critical Vol./Cap.(X):	1.053
Loss Time (sec):	16 (Y+R=4.0 sec)	Average Delay (sec/veh):	77.1
Optimal Cycle:	130	Level Of Service:	E

Street Name:	Trautwein Rd						John F. Kennedy Dr					
Approach:	North Bound			South Bound			East Bound			West Bound		
Movement:	L -	T -	R	L -	T -	R	L -	T -	R	L -	T -	R
Control:	Protected			Protected			Protected			Protected		
Rights:	Include			Ovl			Include			Include		
Min. Green:	7	7	7	7	7	7	7	7	7	7	7	7
Lanes:	1 0	2 0	1	1 0	2 0	1	2 0	1 0	1	1 0	1 0	1
Volume Module:												
Base Vol:	128	2160	81	9	793	758	785	91	90	122	108	71
Growth Adj:	1.00	1.00	1.00	1.00	1.00	1.00	1.00	1.00	1.00	1.00	1.00	1.00
Initial Bse:	128	2160	81	9	793	758	785	91	90	122	108	71
Added Vol:	0	0	0	0	0	0	0	0	0	0	0	0
PasserByVol:	0	0	0	0	0	0	0	0	0	0	0	0
Initial Fut:	128	2160	81	9	793	758	785	91	90	122	108	71
User Adj:	1.00	1.00	1.00	1.00	1.00	1.00	1.00	1.00	1.00	1.00	1.00	1.00
PHF Adj:	1.00	1.00	1.00	1.00	1.00	1.00	1.00	1.00	1.00	1.00	1.00	1.00
PHF Volume:	128	2160	81	9	793	758	785	91	90	122	108	71
Reduct Vol:	0	0	0	0	0	0	0	0	0	0	0	0
Reduced Vol:	128	2160	81	9	793	758	785	91	90	122	108	71
PCE Adj:	1.00	1.00	1.00	1.00	1.00	1.00	1.00	1.00	1.00	1.00	1.00	1.00
MLF Adj:	1.00	1.00	1.00	1.00	1.00	1.00	1.00	1.00	1.00	1.00	1.00	1.00
FinalVolume:	128	2160	81	9	793	758	785	91	90	122	108	71
Saturation Flow Module:												
Sat/Lane:	1900	1900	1900	1900	1900	1900	1900	1900	1900	1900	1900	1900
Adjustment:	0.95	0.95	0.85	0.95	0.95	0.85	0.92	1.00	0.85	0.95	1.00	0.85
Lanes:	1.00	2.00	1.00	1.00	2.00	1.00	2.00	1.00	1.00	1.00	1.00	1.00
Final Sat.:	1805	3610	1615	1805	3610	1615	3502	1900	1615	1805	1900	1615
Capacity Analysis Module:												
Vol/Sat:	0.07	0.60	0.05	0.00	0.22	0.47	0.22	0.05	0.06	0.07	0.06	0.04
Crit Moves:		****		****			****				****	
Green/Cycle:	0.13	0.51	0.51	0.07	0.45	0.64	0.19	0.13	0.13	0.13	0.07	0.07
Volume/Cap:	0.55	1.18	0.10	0.07	0.49	0.73	1.18	0.37	0.43	0.52	0.81	0.63
Delay/Veh:	43.4	109	12.7	43.7	19.7	15.0	134.4	40.6	41.4	42.6	76.0	56.0
User DelAdj:	1.00	1.00	1.00	1.00	1.00	1.00	1.00	1.00	1.00	1.00	1.00	1.00
AdjDel/Veh:	43.4	109	12.7	43.7	19.7	15.0	134.4	40.6	41.4	42.6	76.0	56.0
LOS by Move:	D	F	B	D	B	B	F	D	D	D	E	E
HCM2kAvgQ:	4	58	1	0	9	17	23	3	3	4	5	3

Note: Queue reported is the number of cars per lane.

Traffix 7.9.0415 (c) 2007 Dowling Assoc. Licensed to MMA, LONG BEACH, CA

Overlook Parkway Extension
Future Alt 3 (Gates Opened - With Overlook)
AM Peak Hour

Level Of Service Computation Report
2000 HCM Operations Method (Future Volume Alternative)

Intersection #24 Hawarden Dr/Overlook Pkwy

Cycle (sec):	100	Critical Vol./Cap.(X):	0.329
Loss Time (sec):	8 (Y+R=4.0 sec)	Average Delay (sec/veh):	9.5
Optimal Cycle:	25	Level Of Service:	A

Street Name:	Hawarden Dr						Overlook Pkwy					
Approach:	North Bound			South Bound			East Bound			West Bound		
Movement:	L -	T -	R	L -	T -	R	L -	T -	R	L -	T -	R
Control:	Permitted			Permitted			Permitted			Permitted		
Rights:	Include			Include			Include			Include		
Min. Green:	7	7	7	7	7	7	7	7	7	7	7	7
Lanes:	0 0	1! 0	0	0 0	1! 0	0	1 0	1 1	0	1 0	1 1	0
Volume Module:												
Base Vol:	73	43	12	19	5	13	17	508	37	1	748	37
Growth Adj:	1.00	1.00	1.00	1.00	1.00	1.00	1.00	1.00	1.00	1.00	1.00	1.00
Initial Bse:	73	43	12	19	5	13	17	508	37	1	748	37
Added Vol:	0	0	0	0	0	0	0	0	0	0	0	0
PasserByVol:	0	0	0	0	0	0	0	0	0	0	0	0
Initial Fut:	73	43	12	19	5	13	17	508	37	1	748	37
User Adj:	1.00	1.00	1.00	1.00	1.00	1.00	1.00	1.00	1.00	1.00	1.00	1.00
PHF Adj:	1.00	1.00	1.00	1.00	1.00	1.00	1.00	1.00	1.00	1.00	1.00	1.00
PHF Volume:	73	43	12	19	5	13	17	508	37	1	748	37
Reduct Vol:	0	0	0	0	0	0	0	0	0	0	0	0
Reduced Vol:	73	43	12	19	5	13	17	508	37	1	748	37
PCE Adj:	1.00	1.00	1.00	1.00	1.00	1.00	1.00	1.00	1.00	1.00	1.00	1.00
MLF Adj:	1.00	1.00	1.00	1.00	1.00	1.00	1.00	1.00	1.00	1.00	1.00	1.00
FinalVolume:	73	43	12	19	5	13	17	508	37	1	748	37
Saturation Flow Module:												
Sat/Lane:	1900	1900	1900	1900	1900	1900	1900	1900	1900	1900	1900	1900
Adjustment:	0.80	0.80	0.80	0.82	0.82	0.82	0.32	0.94	0.94	0.43	0.94	0.94
Lanes:	0.57	0.34	0.09	0.51	0.14	0.35	1.00	1.86	0.14	1.00	1.91	0.09
Final Sat.:	872	513	143	801	211	548	604	3331	243	815	3416	169
Capacity Analysis Module:												
Vol/Sat:	0.08	0.08	0.08	0.02	0.02	0.02	0.03	0.15	0.15	0.00	0.22	0.22
Crit Moves:		****									****	
Green/Cycle:	0.25	0.25	0.25	0.25	0.25	0.25	0.67	0.67	0.67	0.67	0.67	0.67
Volume/Cap:	0.33	0.33	0.33	0.09	0.09	0.09	0.04	0.23	0.23	0.00	0.33	0.33
Delay/Veh:	30.8	30.8	30.8	28.6	28.6	28.6	5.8	6.7	6.7	5.6	7.2	7.2
User DelAdj:	1.00	1.00	1.00	1.00	1.00	1.00	1.00	1.00	1.00	1.00	1.00	1.00
AdjDel/Veh:	30.8	30.8	30.8	28.6	28.6	28.6	5.8	6.7	6.7	5.6	7.2	7.2
LOS by Move:	C	C	C	C	C	C	A	A	A	A	A	A
HCM2kAvgQ:	3	3	3	1	1	1	0	3	3	0	5	5

Note: Queue reported is the number of cars per lane.

Traffix 7.9.0415 (c) 2007 Dowling Assoc. Licensed to MMA, LONG BEACH, CA

Overlook Parkway Extension
Future Alt 3 (Gates Opened - With Overlook)
AM Peak Hour

Level Of Service Computation Report
2000 HCM Operations Method (Future Volume Alternative)

Intersection #28 Orozco Dr/Overlook Pkwy

Cycle (sec):	100	Critical Vol./Cap.(X):	0.293
Loss Time (sec):	8 (Y+R=4.0 sec)	Average Delay (sec/veh):	3.6
Optimal Cycle:	24	Level Of Service:	A

Street Name:	Orozco Dr						Overlook Pkwy					
Approach:	North Bound			South Bound			East Bound			West Bound		
Movement:	L - T - R			L - T - R			L - T - R			L - T - R		
Control:	Permitted			Permitted			Permitted			Permitted		
Rights:	Include			Include			Include			Include		
Min. Green:	7	7	7	7	7	7	7	7	7	7	7	7
Lanes:	0 0	1! 0	0	0 0	1! 0	0	1 0	1 1	0	1 0	1 1	0
Volume Module:												
Base Vol:	8	4	4	36	2	2	19	511	4	3	733	118
Growth Adj:	1.00	1.00	1.00	1.00	1.00	1.00	1.00	1.00	1.00	1.00	1.00	1.00
Initial Bse:	8	4	4	36	2	2	19	511	4	3	733	118
Added Vol:	0	0	0	0	0	0	0	0	0	0	0	0
PasserByVol:	0	0	0	0	0	0	0	0	0	0	0	0
Initial Fut:	8	4	4	36	2	2	19	511	4	3	733	118
User Adj:	1.00	1.00	1.00	1.00	1.00	1.00	1.00	1.00	1.00	1.00	1.00	1.00
PHF Adj:	1.00	1.00	1.00	1.00	1.00	1.00	1.00	1.00	1.00	1.00	1.00	1.00
PHF Volume:	8	4	4	36	2	2	19	511	4	3	733	118
Reduct Vol:	0	0	0	0	0	0	0	0	0	0	0	0
Reduced Vol:	8	4	4	36	2	2	19	511	4	3	733	118
PCE Adj:	1.00	1.00	1.00	1.00	1.00	1.00	1.00	1.00	1.00	1.00	1.00	1.00
MLF Adj:	1.00	1.00	1.00	1.00	1.00	1.00	1.00	1.00	1.00	1.00	1.00	1.00
FinalVolume:	8	4	4	36	2	2	19	511	4	3	733	118
Saturation Flow Module:												
Sat/Lane:	1900	1900	1900	1900	1900	1900	1900	1900	1900	1900	1900	1900
Adjustment:	0.84	0.84	0.84	0.72	0.72	0.72	0.32	0.95	0.95	0.46	0.93	0.93
Lanes:	0.50	0.25	0.25	0.90	0.05	0.05	1.00	1.98	0.02	1.00	1.72	0.28
Final Sat.:	800	400	400	1238	69	69	610	3578	28	870	3044	490
Capacity Analysis Module:												
Vol/Sat:	0.01	0.01	0.01	0.03	0.03	0.03	0.03	0.14	0.14	0.00	0.24	0.24
Crit Moves:					****						****	
Green/Cycle:	0.10	0.10	0.10	0.10	0.10	0.10	0.82	0.82	0.82	0.82	0.82	0.82
Volume/Cap:	0.10	0.10	0.10	0.29	0.29	0.29	0.04	0.17	0.17	0.00	0.29	0.29
Delay/Veh:	41.3	41.3	41.3	43.0	43.0	43.0	1.7	1.9	1.9	1.6	2.2	2.2
User DelAdj:	1.00	1.00	1.00	1.00	1.00	1.00	1.00	1.00	1.00	1.00	1.00	1.00
AdjDel/Veh:	41.3	41.3	41.3	43.0	43.0	43.0	1.7	1.9	1.9	1.6	2.2	2.2
LOS by Move:	D	D	D	D	D	D	A	A	A	A	A	A
HCM2kAvgQ:	1	1	1	1	1	1	0	2	2	0	3	3

Note: Queue reported is the number of cars per lane.

Traffix 7.9.0415 (c) 2007 Dowling Assoc. Licensed to MMA, LONG BEACH, CA

Overlook Parkway Extension
Future Alt 3 (Gates Opened - With Overlook)
PM Peak Hour

Level Of Service Computation Report
2000 HCM Operations Method (Future Volume Alternative)

Intersection #3 Madison St/Indiana Ave

Cycle (sec):	100	Critical Vol./Cap.(X):	1.147
Loss Time (sec):	16 (Y+R=4.0 sec)	Average Delay (sec/veh):	80.5
Optimal Cycle:	130	Level Of Service:	F

Street Name:	Madison St						Indiana Ave					
Approach:	North Bound			South Bound			East Bound			West Bound		
Movement:	L - T - R			L - T - R			L - T - R			L - T - R		
Control:	Protected			Protected			Protected			Protected		
Rights:	Include			Include			Include			Ovl		
Min. Green:	7	7	7	7	7	7	7	7	7	7	7	7
Lanes:	1 0	1 1	0	1 0	1 1	0	1 0	1 1	0	1 0	2 0	1
Volume Module:												
Base Vol:	109	792	51	647	1172	313	417	697	101	53	499	642
Growth Adj:	1.00	1.00	1.00	1.00	1.00	1.00	1.00	1.00	1.00	1.00	1.00	1.00
Initial Bse:	109	792	51	647	1172	313	417	697	101	53	499	642
Added Vol:	0	0	0	0	0	0	0	0	0	0	0	0
PasserByVol:	0	0	0	0	0	0	0	0	0	0	0	0
Initial Fut:	109	792	51	647	1172	313	417	697	101	53	499	642
User Adj:	1.00	1.00	1.00	1.00	1.00	1.00	1.00	1.00	1.00	1.00	1.00	1.00
PHF Adj:	1.00	1.00	1.00	1.00	1.00	1.00	1.00	1.00	1.00	1.00	1.00	1.00
PHF Volume:	109	792	51	647	1172	313	417	697	101	53	499	642
Reduct Vol:	0	0	0	0	0	0	0	0	0	0	0	0
Reduced Vol:	109	792	51	647	1172	313	417	697	101	53	499	642
PCE Adj:	1.00	1.00	1.00	1.00	1.00	1.00	1.00	1.00	1.00	1.00	1.00	1.00
MLF Adj:	1.00	1.00	1.00	1.00	1.00	1.00	1.00	1.00	1.00	1.00	1.00	1.00
FinalVolume:	109	792	51	647	1172	313	417	697	101	53	499	642
Saturation Flow Module:												
Sat/Lane:	1900	1900	1900	1900	1900	1900	1900	1900	1900	1900	1900	1900
Adjustment:	0.95	0.94	0.94	0.95	0.92	0.92	0.95	0.93	0.93	0.95	0.95	0.85
Lanes:	1.00	1.88	0.12	1.00	1.58	0.42	1.00	1.75	0.25	1.00	2.00	1.00
Final Sat.:	1805	3361	216	1805	2758	737	1805	3093	448	1805	3610	1615
Capacity Analysis Module:												
Vol/Sat:	0.06	0.24	0.24	0.36	0.42	0.42	0.23	0.23	0.23	0.03	0.14	0.40
Crit Moves:		****		****			****				****	
Green/Cycle:	0.07	0.21	0.21	0.31	0.44	0.44	0.20	0.25	0.25	0.08	0.12	0.43
Volume/Cap:	0.82	1.15	1.15	1.15	0.96	0.96	1.15	0.92	0.92	0.38	1.15	0.92
Delay/Veh:	78.2	121	121.3	119.7	40.5	40.5	133.3	51.1	51.1	45.7	134	43.8
User DelAdj:	1.00	1.00	1.00	1.00	1.00	1.00	1.00	1.00	1.00	1.00	1.00	1.00
AdjDel/Veh:	78.2	121	121.3	119.7	40.5	40.5	133.3	51.1	51.1	45.7	134	43.8
LOS by Move:	E	F	F	F	D	D	F	D	D	D	F	D
HCM2kAvgQ:	6	24	24	34	29	29	23	17	17	2	15	23

Note: Queue reported is the number of cars per lane.

Traffix 7.9.0415 (c) 2007 Dowling Assoc. Licensed to MMA, LONG BEACH, CA

Overlook Parkway Extension
Future Alt 3 (Gates Opened - With Overlook)
PM Peak Hour

Level Of Service Computation Report
2000 HCM Operations Method (Future Volume Alternative)

Intersection #5 Madison St/Victoria Ave

Cycle (sec):	100	Critical Vol./Cap.(X):	0.921
Loss Time (sec):	16 (Y+R=4.0 sec)	Average Delay (sec/veh):	51.3
Optimal Cycle:	125	Level Of Service:	D

Street Name:	Madison St						Victoria Ave					
Approach:	North Bound			South Bound			East Bound			West Bound		
Movement:	L - T - R			L - T - R			L - T - R			L - T - R		
Control:	Split Phase			Split Phase			Split Phase			Split Phase		
Rights:	Include			Include			Include			Ovl		
Min. Green:	7	7	7	7	7	7	7	7	7	7	7	7
Lanes:	0 0	1! 0	0	1 0	0 1	0	0 0	1! 0	0	0 1	0 0	1
Volume Module:												
Base Vol:	14	236	62	557	376	36	46	273	18	19	200	276
Growth Adj:	1.00	1.00	1.00	1.00	1.00	1.00	1.00	1.00	1.00	1.00	1.00	1.00
Initial Bse:	14	236	62	557	376	36	46	273	18	19	200	276
Added Vol:	0	0	0	0	0	0	0	0	0	0	0	0
PasserByVol:	0	0	0	0	0	0	0	0	0	0	0	0
Initial Fut:	14	236	62	557	376	36	46	273	18	19	200	276
User Adj:	1.00	1.00	1.00	1.00	1.00	1.00	1.00	1.00	1.00	1.00	1.00	1.00
PHF Adj:	1.00	1.00	1.00	1.00	1.00	1.00	1.00	1.00	1.00	1.00	1.00	1.00
PHF Volume:	14	236	62	557	376	36	46	273	18	19	200	276
Reduct Vol:	0	0	0	0	0	0	0	0	0	0	0	0
Reduced Vol:	14	236	62	557	376	36	46	273	18	19	200	276
PCE Adj:	1.00	1.00	1.00	1.00	1.00	1.00	1.00	1.00	1.00	1.00	1.00	1.00
MLF Adj:	1.00	1.00	1.00	1.00	1.00	1.00	1.00	1.00	1.00	1.00	1.00	1.00
FinalVolume:	14	236	62	557	376	36	46	273	18	19	200	276
Saturation Flow Module:												
Sat/Lane:	1900	1900	1900	1900	1900	1900	1900	1900	1900	1900	1900	1900
Adjustment:	0.97	0.97	0.97	0.95	0.99	0.99	0.99	0.99	0.99	1.00	1.00	0.85
Lanes:	0.04	0.76	0.20	1.00	0.91	0.09	0.14	0.81	0.05	0.09	0.91	1.00
Final Sat.:	83	1396	367	1805	1711	164	256	1518	100	164	1728	1615
Capacity Analysis Module:												
Vol/Sat:	0.17	0.17	0.17	0.31	0.22	0.22	0.18	0.18	0.18	0.12	0.12	0.17
Crit Moves:			****	****					****	****		
Green/Cycle:	0.18	0.18	0.18	0.34	0.34	0.34	0.20	0.20	0.20	0.13	0.13	0.46
Volume/Cap:	0.92	0.92	0.92	0.92	0.66	0.66	0.92	0.92	0.92	0.92	0.92	0.37
Delay/Veh:	69.6	69.6	69.6	51.4	30.8	30.8	67.4	67.4	67.4	80.6	80.6	17.8
User DelAdj:	1.00	1.00	1.00	1.00	1.00	1.00	1.00	1.00	1.00	1.00	1.00	1.00
AdjDel/Veh:	69.6	69.6	69.6	51.4	30.8	30.8	67.4	67.4	67.4	80.6	80.6	17.8
LOS by Move:	E	E	E	D	C	C	E	E	E	F	F	B
HCM2kAvgQ:	13	13	13	21	12	12	14	14	14	10	10	6

Note: Queue reported is the number of cars per lane.

Traffix 7.9.0415 (c) 2007 Dowling Assoc. Licensed to MMA, LONG BEACH, CA

Overlook Parkway Extension
Future Alt 3 (Gates Opened - With Overlook)
PM Peak Hour

Level Of Service Computation Report
2000 HCM 4-Way Stop Method (Future Volume Alternative)

Intersection #7 Washington St/Lincoln Ave

Cycle (sec):	100	Critical Vol./Cap.(X):	1.445
Loss Time (sec):	0 (Y+R=4.0 sec)	Average Delay (sec/veh):	128.0
Optimal Cycle:	0	Level Of Service:	F

Street Name:	Washington St						Lincoln Ave					
Approach:	North Bound			South Bound			East Bound			West Bound		
Movement:	L - T - R			L - T - R			L - T - R			L - T - R		
Control:	Stop Sign			Stop Sign			Stop Sign			Stop Sign		
Rights:	Include			Include			Include			Include		
Min. Green:	7	7	7	7	7	7	7	7	7	7	7	7
Lanes:	1 0	0 1	0	1 0	0 1	0	0 1	0 0	1	0 1	0 0	1
Volume Module:												
Base Vol:	106	528	36	46	612	44	16	296	94	36	152	18
Growth Adj:	1.00	1.00	1.00	1.00	1.00	1.00	1.00	1.00	1.00	1.00	1.00	1.00
Initial Bse:	106	528	36	46	612	44	16	296	94	36	152	18
Added Vol:	0	0	0	0	0	0	0	0	0	0	0	0
PasserByVol:	0	0	0	0	0	0	0	0	0	0	0	0
Initial Fut:	106	528	36	46	612	44	16	296	94	36	152	18
User Adj:	1.00	1.00	1.00	1.00	1.00	1.00	1.00	1.00	1.00	1.00	1.00	1.00
PHF Adj:	1.00	1.00	1.00	1.00	1.00	1.00	1.00	1.00	1.00	1.00	1.00	1.00
PHF Volume:	106	528	36	46	612	44	16	296	94	36	152	18
Reduct Vol:	0	0	0	0	0	0	0	0	0	0	0	0
Reduced Vol:	106	528	36	46	612	44	16	296	94	36	152	18
PCE Adj:	1.00	1.00	1.00	1.00	1.00	1.00	1.00	1.00	1.00	1.00	1.00	1.00
MLF Adj:	1.00	1.00	1.00	1.00	1.00	1.00	1.00	1.00	1.00	1.00	1.00	1.00
FinalVolume:	106	528	36	46	612	44	16	296	94	36	152	18
Saturation Flow Module:												
Adjustment:	1.00	1.00	1.00	1.00	1.00	1.00	1.00	1.00	1.00	1.00	1.00	1.00
Lanes:	1.00	0.94	0.06	1.00	0.93	0.07	0.05	0.95	1.00	0.19	0.81	1.00
Final Sat.:	425	427	29	421	423	30	22	404	465	75	318	430
Capacity Analysis Module:												
Vol/Sat:	0.25	1.24	1.24	0.11	1.45	1.45	0.73	0.73	0.20	0.48	0.48	0.04
Crit Moves:			****		****			****			****	
Delay/Veh:	13.9	148	148.5	12.2	234	234.2	30.7	30.7	12.3	19.5	19.5	11.3
Delay Adj:	1.00	1.00	1.00	1.00	1.00	1.00	1.00	1.00	1.00	1.00	1.00	1.00
AdjDel/Veh:	13.9	148	148.5	12.2	234	234.2	30.7	30.7	12.3	19.5	19.5	11.3
LOS by Move:	B	F	F	B	F	F	D	D	B	C	C	B
ApproachDel:	127.2			219.6			26.5			18.8		
Delay Adj:	1.00			1.00			1.00			1.00		
ApprAdjDel:	127.2			219.6			26.5			18.8		
LOS by Appr:	F			F			D			C		
AllWayAvgQ:	0.3	17.5	17.5	0.1	28.2	28.2	2.3	2.3	0.2	0.8	0.8	0.0

Traffix 7.9.0415 (c) 2007 Dowling Assoc. Licensed to MMA, LONG BEACH, CA

Overlook Parkway Extension
Future Alt 3 (Gates Opened - With Overlook)
PM Peak Hour

Level Of Service Computation Report
2000 HCM Operations Method (Future Volume Alternative)

Intersection #8 Washington St/Victoria Ave

Cycle (sec):	100	Critical Vol./Cap.(X):	1.338
Loss Time (sec):	16 (Y+R=4.0 sec)	Average Delay (sec/veh):	198.2
Optimal Cycle:	130	Level Of Service:	F

Street Name:	Washington St						Victoria Ave					
Approach:	North Bound			South Bound			East Bound			West Bound		
Movement:	L	T	R	L	T	R	L	T	R	L	T	R
Control:	Split Phase			Split Phase			Split Phase			Split Phase		
Rights:	Include			Include			Ovl			Ovl		
Min. Green:	7	7	7	7	7	7	7	7	7	7	7	7
Lanes:	0 1	0 1	0	0 1	0 1	0	0 1	0 0	1	0 1	0 0	1
Volume Module:												
Base Vol:	379	658	413	1	742	3	3	118	757	679	100	8
Growth Adj:	1.00	1.00	1.00	1.00	1.00	1.00	1.00	1.00	1.00	1.00	1.00	1.00
Initial Bse:	379	658	413	1	742	3	3	118	757	679	100	8
Added Vol:	0	0	0	0	0	0	0	0	0	0	0	0
PasserByVol:	0	0	0	0	0	0	0	0	0	0	0	0
Initial Fut:	379	658	413	1	742	3	3	118	757	679	100	8
User Adj:	1.00	1.00	1.00	1.00	1.00	1.00	1.00	1.00	1.00	1.00	1.00	1.00
PHF Adj:	1.00	1.00	1.00	1.00	1.00	1.00	1.00	1.00	1.00	1.00	1.00	1.00
PHF Volume:	379	658	413	1	742	3	3	118	757	679	100	8
Reduct Vol:	0	0	0	0	0	0	0	0	0	0	0	0
Reduced Vol:	379	658	413	1	742	3	3	118	757	679	100	8
PCE Adj:	1.00	1.00	1.00	1.00	1.00	1.00	1.00	1.00	1.00	1.00	1.00	1.00
MLF Adj:	1.00	1.00	1.00	1.00	1.00	1.00	1.00	1.00	1.00	1.00	1.00	1.00
FinalVolume:	379	658	413	1	742	3	3	118	757	679	100	8
Saturation Flow Module:												
Sat/Lane:	1900	1900	1900	1900	1900	1900	1900	1900	1900	1900	1900	1900
Adjustment:	0.90	0.90	0.90	0.95	0.95	0.95	1.00	1.00	0.85	0.96	0.96	0.85
Lanes:	0.52	0.91	0.57	0.01	1.98	0.01	0.02	0.98	1.00	0.87	0.13	1.00
Final Sat.:	891	1547	971	5	3587	15	47	1851	1615	1587	234	1615
Capacity Analysis Module:												
Vol/Sat:	0.43	0.43	0.43	0.21	0.21	0.21	0.06	0.06	0.47	0.43	0.43	0.00
Crit Moves:			****	****			****			****		
Green/Cycle:	0.31	0.31	0.31	0.15	0.15	0.15	0.07	0.07	0.38	0.31	0.31	0.46
Volume/Cap:	1.38	1.38	1.38	1.38	1.38	1.38	0.91	0.91	1.24	1.38	1.38	0.01
Delay/Veh:	210.1	210	210.1	223.4	223	223.4	97.9	97.9	151.4	214.9	215	14.6
User DelAdj:	1.00	1.00	1.00	1.00	1.00	1.00	1.00	1.00	1.00	1.00	1.00	1.00
AdjDel/Veh:	210.1	210	210.1	223.4	223	223.4	97.9	97.9	151.4	214.9	215	14.6
LOS by Move:	F	F	F	F	F	F	F	F	F	F	F	B
HCM2kAvgQ:	51	51	51	27	27	27	7	7	43	52	52	0

Note: Queue reported is the number of cars per lane.

Traffix 7.9.0415 (c) 2007 Dowling Assoc. Licensed to MMA, LONG BEACH, CA

Overlook Parkway Extension
Future Alt 3 (Gates Opened - With Overlook)
PM Peak Hour

Level Of Service Computation Report
2000 HCM Operations Method (Future Volume Alternative)

Intersection #9 Washington St/Overlook Pkwy

Cycle (sec):	100	Critical Vol./Cap.(X):	0.810
Loss Time (sec):	12 (Y+R=4.0 sec)	Average Delay (sec/veh):	23.2
Optimal Cycle:	79	Level Of Service:	C

Street Name:	Washington St						Overlook Pkwy					
Approach:	North Bound			South Bound			East Bound			West Bound		
Movement:	L	T	R	L	T	R	L	T	R	L	T	R
Control:	Protected			Protected			Protected			Protected		
Rights:	Include			Include			Include			Ovl		
Min. Green:	7	7	7	7	7	7	7	7	7	7	7	7
Lanes:	0 0	1 1	0	2 0	2 0	0	0 0	0 0	0	1 0	0 0	2
Volume Module:												
Base Vol:	0	1343	49	1074	1650	0	0	0	0	34	0	817
Growth Adj:	1.00	1.00	1.00	1.00	1.00	1.00	1.00	1.00	1.00	1.00	1.00	1.00
Initial Bse:	0	1343	49	1074	1650	0	0	0	0	34	0	817
Added Vol:	0	0	0	0	0	0	0	0	0	0	0	0
PasserByVol:	0	0	0	0	0	0	0	0	0	0	0	0
Initial Fut:	0	1343	49	1074	1650	0	0	0	0	34	0	817
User Adj:	1.00	1.00	1.00	1.00	1.00	1.00	1.00	1.00	1.00	1.00	1.00	1.00
PHF Adj:	1.00	1.00	1.00	1.00	1.00	1.00	1.00	1.00	1.00	1.00	1.00	1.00
PHF Volume:	0	1343	49	1074	1650	0	0	0	0	34	0	817
Reduct Vol:	0	0	0	0	0	0	0	0	0	0	0	0
Reduced Vol:	0	1343	49	1074	1650	0	0	0	0	34	0	817
PCE Adj:	1.00	1.00	1.00	1.00	1.00	1.00	1.00	1.00	1.00	1.00	1.00	1.00
MLF Adj:	1.00	1.00	1.00	1.00	1.00	1.00	1.00	1.00	1.00	1.00	1.00	1.00
FinalVolume:	0	1343	49	1074	1650	0	0	0	0	34	0	817
Saturation Flow Module:												
Sat/Lane:	1900	1900	1900	1900	1900	1900	1900	1900	1900	1900	1900	1900
Adjustment:	1.00	0.95	0.95	0.92	0.95	1.00	1.00	1.00	1.00	0.95	1.00	0.75
Lanes:	0.00	1.93	0.07	2.00	2.00	0.00	0.00	0.00	0.00	1.00	0.00	2.00
Final Sat.:	0	3466	126	3502	3610	0	0	0	0	1805	0	2842
Capacity Analysis Module:												
Vol/Sat:	0.00	0.39	0.39	0.31	0.46	0.00	0.00	0.00	0.00	0.02	0.00	0.29
Crit Moves:		****		****						****		
Green/Cycle:	0.00	0.45	0.45	0.36	0.70	0.00	0.00	0.00	0.00	0.07	0.00	0.43
Volume/Cap:	0.00	0.86	0.86	0.86	0.65	0.00	0.00	0.00	0.00	0.27	0.00	0.67
Delay/Veh:	0.0	29.3	29.3	35.8	8.8	0.0	0.0	0.0	0.0	45.2	0.0	24.5
User DelAdj:	1.00	1.00	1.00	1.00	1.00	1.00	1.00	1.00	1.00	1.00	1.00	1.00
AdjDel/Veh:	0.0	29.3	29.3	35.8	8.8	0.0	0.0	0.0	0.0	45.2	0.0	24.5
LOS by Move:	A	C	C	D	A	A	A	A	A	D	A	C
HCM2kAvgQ:	0	23	23	19	15	0	0	0	0	1	0	12

Note: Queue reported is the number of cars per lane.

Traffix 7.9.0415 (c) 2007 Dowling Assoc. Licensed to MMA, LONG BEACH, CA

Overlook Parkway Extension
Future Alt 3 (Gates Opened - With Overlook)
PM Peak Hour

Level Of Service Computation Report
2000 HCM Operations Method (Future Volume Alternative)

Intersection #12 Victoria Ave/Arlington Ave

Cycle (sec):	100	Critical Vol./Cap.(X):	1.059
Loss Time (sec):	16 (Y+R=4.0 sec)	Average Delay (sec/veh):	59.4
Optimal Cycle:	130	Level Of Service:	E

Street Name:	Victoria Ave								Arlington Ave					
Approach:	North Bound			South Bound			East Bound			West Bound				
Movement:	L	T	R	L	T	R	L	T	R	L	T	R	L	T	R
Control:	Protected			Protected			Protected			Protected					
Rights:	Ovl			Include			Include			Ovl					
Min. Green:	7	7	7	7	7	7	7	7	7	7	7	7			
Lanes:	1 0	1 0	1	1 0	1 0	1	1 0	2 1	0	1 0	3 0	1			
Volume Module:															
Base Vol:	8	259	338	370	326	222	251	2120	11	247	1501	223			
Growth Adj:	1.00	1.00	1.00	1.00	1.00	1.00	1.00	1.00	1.00	1.00	1.00	1.00			
Initial Bse:	8	259	338	370	326	222	251	2120	11	247	1501	223			
Added Vol:	0	0	0	0	0	0	0	0	0	0	0	0			
PasserByVol:	0	0	0	0	0	0	0	0	0	0	0	0			
Initial Fut:	8	259	338	370	326	222	251	2120	11	247	1501	223			
User Adj:	1.00	1.00	1.00	1.00	1.00	1.00	1.00	1.00	1.00	1.00	1.00	1.00			
PHF Adj:	1.00	1.00	1.00	1.00	1.00	1.00	1.00	1.00	1.00	1.00	1.00	1.00			
PHF Volume:	8	259	338	370	326	222	251	2120	11	247	1501	223			
Reduct Vol:	0	0	0	0	0	0	0	0	0	0	0	0			
Reduced Vol:	8	259	338	370	326	222	251	2120	11	247	1501	223			
PCE Adj:	1.00	1.00	1.00	1.00	1.00	1.00	1.00	1.00	1.00	1.00	1.00	1.00			
MLF Adj:	1.00	1.00	1.00	1.00	1.00	1.00	1.00	1.00	1.00	1.00	1.00	1.00			
FinalVolume:	8	259	338	370	326	222	251	2120	11	247	1501	223			
Saturation Flow Module:															
Sat/Lane:	1900	1900	1900	1900	1900	1900	1900	1900	1900	1900	1900	1900			
Adjustment:	0.95	1.00	0.85	0.95	1.00	0.85	0.95	0.91	0.91	0.95	0.91	0.85			
Lanes:	1.00	1.00	1.00	1.00	1.00	1.00	1.00	2.98	0.02	1.00	3.00	1.00			
Final Sat.:	1805	1900	1615	1805	1900	1615	1805	5155	27	1805	5187	1615			
Capacity Analysis Module:															
Vol/Sat:	0.00	0.14	0.21	0.20	0.17	0.14	0.14	0.41	0.41	0.14	0.29	0.14			
Crit Moves:		****		****				****		****					
Green/Cycle:	0.09	0.13	0.26	0.19	0.23	0.23	0.17	0.39	0.39	0.13	0.35	0.54			
Volume/Cap:	0.05	1.06	0.81	1.06	0.75	0.60	0.83	1.06	1.06	1.06	0.83	0.25			
Delay/Veh:	41.4	117	46.2	104.8	43.0	37.2	57.1	68.3	68.3	118.8	33.1	12.3			
User DelAdj:	1.00	1.00	1.00	1.00	1.00	1.00	1.00	1.00	1.00	1.00	1.00	1.00			
AdjDel/Veh:	41.4	117	46.2	104.8	43.0	37.2	57.1	68.3	68.3	118.8	33.1	12.3			
LOS by Move:	D	F	D	F	D	D	E	E	E	F	C	B			
HCM2kAvgQ:	0	14	12	18	11	7	10	35	35	13	18	4			

Note: Queue reported is the number of cars per lane.

Traffix 7.9.0415 (c) 2007 Dowling Assoc. Licensed to MMA, LONG BEACH, CA

Overlook Parkway Extension
Future Alt 3 (Gates Opened - With Overlook)
PM Peak Hour

Level Of Service Computation Report
2000 HCM Operations Method (Future Volume Alternative)

Intersection #16 Crystal View Ter/Overlook Pkwy

Cycle (sec):	100	Critical Vol./Cap.(X):	0.416
Loss Time (sec):	8 (Y+R=4.0 sec)	Average Delay (sec/veh):	3.2
Optimal Cycle:	28	Level Of Service:	A

Street Name:	Crystal View Ter								Overlook Pkwy					
Approach:	North Bound			South Bound			East Bound			West Bound				
Movement:	L	T	R	L	T	R	L	T	R	L	T	R	L	T	R
Control:	Permitted			Permitted			Permitted			Permitted					
Rights:	Include			Include			Include			Include					
Min. Green:	7	7	7	7	7	7	7	7	7	7	7	7			
Lanes:	0 0	1! 0	0	0 0	1 0	0	1 0	1 1	0	1 0	1 1	0			
Volume Module:															
Base Vol:	40	0	12	0	2	0	1	956	252	16	1009	0			
Growth Adj:	1.00	1.00	1.00	1.00	1.00	1.00	1.00	1.00	1.00	1.00	1.00	1.00			
Initial Bse:	40	0	12	0	2	0	1	956	252	16	1009	0			
Added Vol:	0	0	0	0	0	0	0	0	0	0	0	0			
PasserByVol:	0	0	0	0	0	0	0	0	0	0	0	0			
Initial Fut:	40	0	12	0	2	0	1	956	252	16	1009	0			
User Adj:	1.00	1.00	1.00	1.00	1.00	1.00	1.00	1.00	1.00	1.00	1.00	1.00			
PHF Adj:	1.00	1.00	1.00	1.00	1.00	1.00	1.00	1.00	1.00	1.00	1.00	1.00			
PHF Volume:	40	0	12	0	2	0	1	956	252	16	1009	0			
Reduct Vol:	0	0	0	0	0	0	0	0	0	0	0	0			
Reduced Vol:	40	0	12	0	2	0	1	956	252	16	1009	0			
PCE Adj:	1.00	1.00	1.00	1.00	1.00	1.00	1.00	1.00	1.00	1.00	1.00	1.00			
MLF Adj:	1.00	1.00	1.00	1.00	1.00	1.00	1.00	1.00	1.00	1.00	1.00	1.00			
FinalVolume:	40	0	12	0	2	0	1	956	252	16	1009	0			
Saturation Flow Module:															
Sat/Lane:	1900	1900	1900	1900	1900	1900	1900	1900	1900	1900	1900	1900			
Adjustment:	0.74	1.00	0.74	1.00	1.00	1.00	0.27	0.92	0.92	0.22	0.95	0.95			
Lanes:	0.77	0.00	0.23	0.00	1.00	0.00	1.00	1.58	0.42	1.00	2.00	0.00			
Final Sat.:	1081	0	324	0	1900	0	521	2768	730	414	3610	0			
Capacity Analysis Module:															
Vol/Sat:	0.04	0.00	0.04	0.00	0.00	0.00	0.00	0.35	0.35	0.04	0.28	0.00			
Crit Moves:	****							****							
Green/Cycle:	0.09	0.00	0.09	0.00	0.09	0.00	0.83	0.83	0.83	0.83	0.83	0.00			
Volume/Cap:	0.42	0.00	0.42	0.00	0.01	0.00	0.00	0.42	0.42	0.05	0.34	0.00			
Delay/Veh:	45.3	0.0	45.3	0.0	41.6	0.0	1.4	2.3	2.3	1.5	2.1	0.0			
User DelAdj:	1.00	1.00	1.00	1.00	1.00	1.00	1.00	1.00	1.00	1.00	1.00	1.00			
AdjDel/Veh:	45.3	0.0	45.3	0.0	41.6	0.0	1.4	2.3	2.3	1.5	2.1	0.0			
LOS by Move:	D	A	D	A	D	A	A	A	A	A	A	A			
HCM2kAvgQ:	2	0	2	0	0	0	0	5	5	0	4	0			

Note: Queue reported is the number of cars per lane.

Traffix 7.9.0415 (c) 2007 Dowling Assoc. Licensed to MMA, LONG BEACH, CA

Overlook Parkway Extension
Future Alt 3 (Gates Opened - With Overlook)
PM Peak Hour

Level Of Service Computation Report
2000 HCM Operations Method (Future Volume Alternative)

Intersection #17 Kingdom Dr/Overlook Pkwy

Cycle (sec):	100	Critical Vol./Cap.(X):	0.598
Loss Time (sec):	8 (Y+R=4.0 sec)	Average Delay (sec/veh):	7.2
Optimal Cycle:	38	Level Of Service:	A

Street Name:	Kingdom Dr						Overlook Pkwy					
Approach:	North Bound			South Bound			East Bound			West Bound		
Movement:	L - T - R			L - T - R			L - T - R			L - T - R		
Control:	Permitted			Permitted			Permitted			Permitted		
Rights:	Include			Include			Include			Include		
Min. Green:	7	7	7	7	7	7	7	7	7	7	7	7
Lanes:	0 0	1! 0	0	1 0	0 0	0	1 0	1 1	0	1 0	1 1	0
Volume Module:												
Base Vol:	56	0	95	4	0	0	0	1129	132	164	853	5
Growth Adj:	1.00	1.00	1.00	1.00	1.00	1.00	1.00	1.00	1.00	1.00	1.00	1.00
Initial Bse:	56	0	95	4	0	0	0	1129	132	164	853	5
Added Vol:	0	0	0	0	0	0	0	0	0	0	0	0
PasserByVol:	0	0	0	0	0	0	0	0	0	0	0	0
Initial Fut:	56	0	95	4	0	0	0	1129	132	164	853	5
User Adj:	1.00	1.00	1.00	1.00	1.00	1.00	1.00	1.00	1.00	1.00	1.00	1.00
PHF Adj:	1.00	1.00	1.00	1.00	1.00	1.00	1.00	1.00	1.00	1.00	1.00	1.00
PHF Volume:	56	0	95	4	0	0	0	1129	132	164	853	5
Reduct Vol:	0	0	0	0	0	0	0	0	0	0	0	0
Reduced Vol:	56	0	95	4	0	0	0	1129	132	164	853	5
PCE Adj:	1.00	1.00	1.00	1.00	1.00	1.00	1.00	1.00	1.00	1.00	1.00	1.00
MLF Adj:	1.00	1.00	1.00	1.00	1.00	1.00	1.00	1.00	1.00	1.00	1.00	1.00
FinalVolume:	56	0	95	4	0	0	0	1129	132	164	853	5
Saturation Flow Module:												
Sat/Lane:	1900	1900	1900	1900	1900	1900	1900	1900	1900	1900	1900	1900
Adjustment:	0.81	1.00	0.81	0.85	1.00	1.00	1.00	0.93	0.93	0.19	0.95	0.95
Lanes:	0.37	0.00	0.63	1.00	0.00	0.00	1.00	1.79	0.21	1.00	1.99	0.01
Final Sat.:	568	0	964	1613	0	0	1900	3180	372	363	3585	21
Capacity Analysis Module:												
Vol/Sat:	0.10	0.00	0.10	0.00	0.00	0.00	0.00	0.35	0.35	0.45	0.24	0.24
Crit Moves:	****									****		
Green/Cycle:	0.16	0.00	0.16	0.16	0.00	0.00	0.00	0.76	0.76	0.76	0.76	0.76
Volume/Cap:	0.60	0.00	0.60	0.02	0.00	0.00	0.00	0.47	0.47	0.60	0.32	0.32
Delay/Veh:	42.6	0.0	42.6	35.0	0.0	0.0	0.0	4.8	4.8	9.1	4.0	4.0
User DelAdj:	1.00	1.00	1.00	1.00	1.00	1.00	1.00	1.00	1.00	1.00	1.00	1.00
AdjDel/Veh:	42.6	0.0	42.6	35.0	0.0	0.0	0.0	4.8	4.8	9.1	4.0	4.0
LOS by Move:	D	A	D	C	A	A	A	A	A	A	A	A
HCM2kAvgQ:	5	0	5	0	0	0	0	8	8	3	4	4

Note: Queue reported is the number of cars per lane.

Traffix 7.9.0415 (c) 2007 Dowling Assoc. Licensed to MMA, LONG BEACH, CA

Overlook Parkway Extension
Future Alt 3 (Gates Opened - With Overlook)
PM Peak Hour

Level Of Service Computation Report
2000 HCM Operations Method (Future Volume Alternative)

Intersection #19 Trautwein Rd/John F. Kennedy Dr

Cycle (sec):	100	Critical Vol./Cap.(X):	0.885
Loss Time (sec):	16 (Y+R=4.0 sec)	Average Delay (sec/veh):	31.6
Optimal Cycle:	111	Level Of Service:	C

Street Name:	Trautwein Rd						John F. Kennedy Dr					
Approach:	North Bound			South Bound			East Bound			West Bound		
Movement:	L - T - R			L - T - R			L - T - R			L - T - R		
Control:	Protected			Protected			Protected			Protected		
Rights:	Include			Ovl			Include			Include		
Min. Green:	7	7	7	7	7	7	7	7	7	7	7	7
Lanes:	1 0	2 0	1	1 0	2 0	1	2 0	1 0	1	1 0	1 0	1
Volume Module:												
Base Vol:	73	1409	91	60	1977	536	456	56	125	63	47	33
Growth Adj:	1.00	1.00	1.00	1.00	1.00	1.00	1.00	1.00	1.00	1.00	1.00	1.00
Initial Bse:	73	1409	91	60	1977	536	456	56	125	63	47	33
Added Vol:	0	0	0	0	0	0	0	0	0	0	0	0
PasserByVol:	0	0	0	0	0	0	0	0	0	0	0	0
Initial Fut:	73	1409	91	60	1977	536	456	56	125	63	47	33
User Adj:	1.00	1.00	1.00	1.00	1.00	1.00	1.00	1.00	1.00	1.00	1.00	1.00
PHF Adj:	1.00	1.00	1.00	1.00	1.00	1.00	1.00	1.00	1.00	1.00	1.00	1.00
PHF Volume:	73	1409	91	60	1977	536	456	56	125	63	47	33
Reduct Vol:	0	0	0	0	0	0	0	0	0	0	0	0
Reduced Vol:	73	1409	91	60	1977	536	456	56	125	63	47	33
PCE Adj:	1.00	1.00	1.00	1.00	1.00	1.00	1.00	1.00	1.00	1.00	1.00	1.00
MLF Adj:	1.00	1.00	1.00	1.00	1.00	1.00	1.00	1.00	1.00	1.00	1.00	1.00
FinalVolume:	73	1409	91	60	1977	536	456	56	125	63	47	33
Saturation Flow Module:												
Sat/Lane:	1900	1900	1900	1900	1900	1900	1900	1900	1900	1900	1900	1900
Adjustment:	0.95	0.95	0.85	0.95	0.95	0.85	0.92	1.00	0.85	0.95	1.00	0.85
Lanes:	1.00	2.00	1.00	1.00	2.00	1.00	2.00	1.00	1.00	1.00	1.00	1.00
Final Sat.:	1805	3610	1615	1805	3610	1615	3502	1900	1615	1805	1900	1615
Capacity Analysis Module:												
Vol/Sat:	0.04	0.39	0.06	0.03	0.55	0.33	0.13	0.03	0.08	0.03	0.02	0.02
Crit Moves:	****				****		****				****	
Green/Cycle:	0.07	0.54	0.54	0.10	0.57	0.70	0.13	0.11	0.11	0.10	0.07	0.07
Volume/Cap:	0.58	0.72	0.10	0.34	0.97	0.47	0.97	0.27	0.72	0.36	0.35	0.29
Delay/Veh:	51.6	18.8	11.3	43.4	34.1	7.1	76.4	41.8	56.9	43.5	46.0	45.6
User DelAdj:	1.00	1.00	1.00	1.00	1.00	1.00	1.00	1.00	1.00	1.00	1.00	1.00
AdjDel/Veh:	51.6	18.8	11.3	43.4	34.1	7.1	76.4	41.8	56.9	43.5	46.0	45.6
LOS by Move:	D	B	B	D	C	A	E	D	E	D	D	D
HCM2kAvgQ:	3	18	1	2	37	8	11	2	5	2	2	1

Note: Queue reported is the number of cars per lane.

Traffix 7.9.0415 (c) 2007 Dowling Assoc. Licensed to MMA, LONG BEACH, CA

Overlook Parkway Extension
Future Alt 3 (Gates Opened - With Overlook)
PM Peak Hour

Level Of Service Computation Report
2000 HCM Operations Method (Future Volume Alternative)

Intersection #24 Hawarden Dr/Overlook Pkwy

Cycle (sec):	100	Critical Vol./Cap.(X):	0.418
Loss Time (sec):	8 (Y+R=4.0 sec)	Average Delay (sec/veh):	8.1
Optimal Cycle:	28	Level Of Service:	A

Street Name:	Hawarden Dr						Overlook Pkwy					
Approach:	North Bound			South Bound			East Bound			West Bound		
Movement:	L -	T -	R	L -	T -	R	L -	T -	R	L -	T -	R
Control:	Permitted			Permitted			Permitted			Permitted		
Rights:	Include			Include			Include			Include		
Min. Green:	7	7	7	7	7	7	7	7	7	7	7	7
Lanes:	0 0	1! 0	0	0 0	1! 0	0	1 0	1 1	0	1 0	1 1	0
Volume Module:												
Base Vol:	35	6	12	66	29	33	14	1016	55	6	795	29
Growth Adj:	1.00	1.00	1.00	1.00	1.00	1.00	1.00	1.00	1.00	1.00	1.00	1.00
Initial Bse:	35	6	12	66	29	33	14	1016	55	6	795	29
Added Vol:	0	0	0	0	0	0	0	0	0	0	0	0
PasserByVol:	0	0	0	0	0	0	0	0	0	0	0	0
Initial Fut:	35	6	12	66	29	33	14	1016	55	6	795	29
User Adj:	1.00	1.00	1.00	1.00	1.00	1.00	1.00	1.00	1.00	1.00	1.00	1.00
PHF Adj:	1.00	1.00	1.00	1.00	1.00	1.00	1.00	1.00	1.00	1.00	1.00	1.00
PHF Volume:	35	6	12	66	29	33	14	1016	55	6	795	29
Reduct Vol:	0	0	0	0	0	0	0	0	0	0	0	0
Reduced Vol:	35	6	12	66	29	33	14	1016	55	6	795	29
PCE Adj:	1.00	1.00	1.00	1.00	1.00	1.00	1.00	1.00	1.00	1.00	1.00	1.00
MLF Adj:	1.00	1.00	1.00	1.00	1.00	1.00	1.00	1.00	1.00	1.00	1.00	1.00
FinalVolume:	35	6	12	66	29	33	14	1016	55	6	795	29
Saturation Flow Module:												
Sat/Lane:	1900	1900	1900	1900	1900	1900	1900	1900	1900	1900	1900	1900
Adjustment:	0.78	0.78	0.78	0.79	0.79	0.79	0.31	0.94	0.94	0.23	0.95	0.95
Lanes:	0.66	0.11	0.23	0.51	0.23	0.26	1.00	1.90	0.10	1.00	1.93	0.07
Final Sat.:	978	168	335	774	340	387	595	3397	184	445	3466	126
Capacity Analysis Module:												
Vol/Sat:	0.04	0.04	0.04	0.09	0.09	0.09	0.02	0.30	0.30	0.01	0.23	0.23
Crit Moves:					****			****				
Green/Cycle:	0.20	0.20	0.20	0.20	0.20	0.20	0.72	0.72	0.72	0.72	0.72	0.72
Volume/Cap:	0.18	0.18	0.18	0.42	0.42	0.42	0.03	0.42	0.42	0.02	0.32	0.32
Delay/Veh:	33.1	33.1	33.1	35.6	35.6	35.6	4.2	5.9	5.9	4.1	5.3	5.3
User DelAdj:	1.00	1.00	1.00	1.00	1.00	1.00	1.00	1.00	1.00	1.00	1.00	1.00
AdjDel/Veh:	33.1	33.1	33.1	35.6	35.6	35.6	4.2	5.9	5.9	4.1	5.3	5.3
LOS by Move:	C	C	C	D	D	D	A	A	A	A	A	A
HCM2kAvgQ:	1	1	1	4	4	4	0	7	7	0	5	5

Note: Queue reported is the number of cars per lane.

Traffix 7.9.0415 (c) 2007 Dowling Assoc. Licensed to MMA, LONG BEACH, CA

Overlook Parkway Extension
Future Alt 3 (Gates Opened - With Overlook)
PM Peak Hour

Level Of Service Computation Report
2000 HCM Operations Method (Future Volume Alternative)

Intersection #28 Orozco Dr/Overlook Pkwy

Cycle (sec):	100	Critical Vol./Cap.(X):	0.498
Loss Time (sec):	8 (Y+R=4.0 sec)	Average Delay (sec/veh):	13.2
Optimal Cycle:	32	Level Of Service:	B

Street Name:	Orozco Dr						Overlook Pkwy					
Approach:	North Bound			South Bound			East Bound			West Bound		
Movement:	L -	T -	R	L -	T -	R	L -	T -	R	L -	T -	R
Control:	Permitted			Permitted			Permitted			Permitted		
Rights:	Include			Include			Include			Include		
Min. Green:	7	7	7	7	7	7	7	7	7	7	7	7
Lanes:	0 0	1! 0	0	0 0	1! 0	0	1 0	1 1	0	1 0	1 1	0
Volume Module:												
Base Vol:	9	1	2	194	8	21	28	1058	10	0	879	46
Growth Adj:	1.00	1.00	1.00	1.00	1.00	1.00	1.00	1.00	1.00	1.00	1.00	1.00
Initial Bse:	9	1	2	194	8	21	28	1058	10	0	879	46
Added Vol:	0	0	0	0	0	0	0	0	0	0	0	0
PasserByVol:	0	0	0	0	0	0	0	0	0	0	0	0
Initial Fut:	9	1	2	194	8	21	28	1058	10	0	879	46
User Adj:	1.00	1.00	1.00	1.00	1.00	1.00	1.00	1.00	1.00	1.00	1.00	1.00
PHF Adj:	1.00	1.00	1.00	1.00	1.00	1.00	1.00	1.00	1.00	1.00	1.00	1.00
PHF Volume:	9	1	2	194	8	21	28	1058	10	0	879	46
Reduct Vol:	0	0	0	0	0	0	0	0	0	0	0	0
Reduced Vol:	9	1	2	194	8	21	28	1058	10	0	879	46
PCE Adj:	1.00	1.00	1.00	1.00	1.00	1.00	1.00	1.00	1.00	1.00	1.00	1.00
MLF Adj:	1.00	1.00	1.00	1.00	1.00	1.00	1.00	1.00	1.00	1.00	1.00	1.00
FinalVolume:	9	1	2	194	8	21	28	1058	10	0	879	46
Saturation Flow Module:												
Sat/Lane:	1900	1900	1900	1900	1900	1900	1900	1900	1900	1900	1900	1900
Adjustment:	0.83	0.83	0.83	0.72	0.72	0.72	0.25	0.95	0.95	1.00	0.94	0.94
Lanes:	0.75	0.08	0.17	0.87	0.04	0.09	1.00	1.98	0.02	1.00	1.90	0.10
Final Sat.:	1181	131	262	1196	49	129	479	3573	34	1900	3406	178
Capacity Analysis Module:												
Vol/Sat:	0.01	0.01	0.01	0.16	0.16	0.16	0.06	0.30	0.30	0.00	0.26	0.26
Crit Moves:					****			****				
Green/Cycle:	0.33	0.33	0.33	0.33	0.33	0.33	0.59	0.59	0.59	0.00	0.59	0.59
Volume/Cap:	0.02	0.02	0.02	0.50	0.50	0.50	0.10	0.50	0.50	0.00	0.43	0.43
Delay/Veh:	22.9	22.9	22.9	28.0	28.0	28.0	8.9	11.9	11.9	0.0	11.2	11.2
User DelAdj:	1.00	1.00	1.00	1.00	1.00	1.00	1.00	1.00	1.00	1.00	1.00	1.00
AdjDel/Veh:	22.9	22.9	22.9	28.0	28.0	28.0	8.9	11.9	11.9	0.0	11.2	11.2
LOS by Move:	C	C	C	C	C	C	A	B	B	A	B	B
HCM2kAvgQ:	0	0	0	6	6	6	0	10	10	0	8	8

Note: Queue reported is the number of cars per lane.

Traffix 7.9.0415 (c) 2007 Dowling Assoc. Licensed to MMA, LONG BEACH, CA

APPENDIX C:
TRAFFIX WORKSHEETS
2035 CONDITIONS – GATES CLOSED

MITIGATION SCENARIO 4 (2035 GATES CLOSED)


```
Future Alt A AM            Fri Apr 6, 2012 13:14:43                  Page 4-1
-------------------------------------------------------------------------------
                            Overlook Parkway Extension
                                   Future Alt A
                                   AM Peak Hour
-------------------------------------------------------------------------------
                        Level Of Service Computation Report
             2000 HCM Operations Method (Future Volume Alternative)
*******************************************************************************
Intersection #3 Madison St/Indiana Ave
*******************************************************************************
Cycle (sec):         100                 Critical Vol./Cap.(X):         0.944
Loss Time (sec):      16 (Y+R=4.0 sec)  Average Delay (sec/veh):        53.5
Optimal Cycle:       130                 Level Of Service:                  D
*******************************************************************************
Street Name:            Madison St                      Indiana Ave
Approach:      North Bound      South Bound       East Bound       West Bound
Movement:     L  -  T  -  R    L  -  T  -  R    L  -  T  -  R    L  -  T  -  R
------------|---------------||---------------||---------------||---------------|
Control:        Protected        Protected        Protected        Protected
Rights:           Include          Include          Include           Ovl
Min. Green:     7    7    7     7    7    7     7    7    7     7    7    7
Lanes:        1  0  1  1  0    1  0  1  1  0    1  0  1  1  0    1  0  2  0  1
------------|---------------||---------------||---------------||---------------|
Volume Module:
Base Vol:     111 1129   45   487  861  368   265  593   65    20  225  449
Growth Adj:  1.00 1.00 1.00  1.00 1.00 1.00  1.00 1.00 1.00  1.00 1.00 1.00
Initial Bse:  111 1129   45   487  861  368   265  593   65    20  225  449
Added Vol:      0    0    0     0    0    0     0    0    0     0    0    0
PasserByVol:    0    0    0     0    0    0     0    0    0     0    0    0
Initial Fut:  111 1129   45   487  861  368   265  593   65    20  225  449
User Adj:    1.00 1.00 1.00  1.00 1.00 1.00  1.00 1.00 1.00  1.00 1.00 1.00
PHF Adj:     1.00 1.00 1.00  1.00 1.00 1.00  1.00 1.00 1.00  1.00 1.00 1.00
PHF Volume:   111 1129   45   487  861  368   265  593   65    20  225  449
Reduct Vol:     0    0    0     0    0    0     0    0    0     0    0    0
Reduced Vol:  111 1129   45   487  861  368   265  593   65    20  225  449
PCE Adj:     1.00 1.00 1.00  1.00 1.00 1.00  1.00 1.00 1.00  1.00 1.00 1.00
MLF Adj:     1.00 1.00 1.00  1.00 1.00 1.00  1.00 1.00 1.00  1.00 1.00 1.00
FinalVolume:  111 1129   45   487  861  368   265  593   65    20  225  449
------------|---------------||---------------||---------------||---------------|
Saturation Flow Module:
Sat/Lane:    1900 1900 1900  1900 1900 1900  1900 1900 1900  1900 1900 1900
Adjustment:  0.95 0.94 0.94  0.95 0.91 0.91  0.95 0.94 0.94  0.95 0.95 0.85
Lanes:       1.00 1.92 0.08  1.00 1.40 0.60  1.00 1.80 0.20  1.00 2.00 1.00
Final Sat.:  1805 3451  138  1805 2415 1032  1805 3205  351  1805 3610 1615
------------|---------------||---------------||---------------||---------------|
Capacity Analysis Module:
Vol/Sat:     0.06 0.33 0.33  0.27 0.36 0.36  0.15 0.19 0.19  0.01 0.06 0.28
Crit Moves:        ****        ****                 ****        ****
Green/Cycle: 0.10 0.32 0.32  0.27 0.49 0.49  0.17 0.18 0.18  0.07 0.08 0.35
Volume/Cap:  0.64 1.02 1.02  1.02 0.73 0.73  0.86 1.02 1.02  0.16 0.77 0.80
Delay/Veh:   51.1 64.3 64.3  81.8 21.7 21.7  61.2 80.2 80.2  44.3 56.4 37.6
User DelAdj: 1.00 1.00 1.00  1.00 1.00 1.00  1.00 1.00 1.00  1.00 1.00 1.00
AdjDel/Veh:  51.1 64.3 64.3  81.8 21.7 21.7  61.2 80.2 80.2  44.3 56.4 37.6
LOS by Move:   D    E    E     F    C    C     E    F    F     D    E    D
HCM2kAvgQ:     4   27   27    22   17   17    11   17   17     1    5   15
*******************************************************************************
Note: Queue reported is the number of cars per lane.

  Traffix 7.9.0415 (c) 2007 Dowling Assoc. Licensed to MMA, LONG BEACH, CA
```

Overlook Parkway Extension
Future Alt A
AM Peak Hour

Level Of Service Computation Report
2000 HCM Operations Method (Future Volume Alternative)

Intersection #4 Madison St/Lincoln Ave

Cycle (sec):	100	Critical Vol./Cap.(X):	0.660
Loss Time (sec):	16 (Y+R=4.0 sec)	Average Delay (sec/veh):	31.7
Optimal Cycle:	64	Level Of Service:	C

Street Name:	Madison St						Lincoln Ave					
Approach:	North Bound			South Bound			East Bound			West Bound		
Movement:	L - T - R			L - T - R			L - T - R			L - T - R		
Control:	Protected			Protected			Protected			Protected		
Rights:	Include			Include			Include			Include		
Min. Green:	7	7	7	7	7	7	7	7	7	7	7	7
Lanes:	1 0	1 1	0	1 0	2 0	1	1 0	0 1	0	1 0	1 1	0
Volume Module:												
Base Vol:	194	1085	18	44	729	173	144	249	127	27	185	57
Growth Adj:	1.00	1.00	1.00	1.00	1.00	1.00	1.00	1.00	1.00	1.00	1.00	1.00
Initial Bse:	194	1085	18	44	729	173	144	249	127	27	185	57
Added Vol:	0	0	0	0	0	0	0	0	0	0	0	0
PasserByVol:	0	0	0	0	0	0	0	0	0	0	0	0
Initial Fut:	194	1085	18	44	729	173	144	249	127	27	185	57
User Adj:	1.00	1.00	1.00	1.00	1.00	1.00	1.00	1.00	1.00	1.00	1.00	1.00
PHF Adj:	1.00	1.00	1.00	1.00	1.00	1.00	1.00	1.00	1.00	1.00	1.00	1.00
PHF Volume:	194	1085	18	44	729	173	144	249	127	27	185	57
Reduct Vol:	0	0	0	0	0	0	0	0	0	0	0	0
Reduced Vol:	194	1085	18	44	729	173	144	249	127	27	185	57
PCE Adj:	1.00	1.00	1.00	1.00	1.00	1.00	1.00	1.00	1.00	1.00	1.00	1.00
MLF Adj:	1.00	1.00	1.00	1.00	1.00	1.00	1.00	1.00	1.00	1.00	1.00	1.00
FinalVolume:	194	1085	18	44	729	173	144	249	127	27	185	57
Saturation Flow Module:												
Sat/Lane:	1900	1900	1900	1900	1900	1900	1900	1900	1900	1900	1900	1900
Adjustment:	0.95	0.95	0.95	0.95	0.95	0.85	0.95	0.95	0.95	0.95	0.92	0.92
Lanes:	1.00	1.97	0.03	1.00	2.00	1.00	1.00	0.66	0.34	1.00	1.53	0.47
Final Sat.:	1805	3544	59	1805	3610	1615	1805	1194	609	1805	2663	821
Capacity Analysis Module:												
Vol/Sat:	0.11	0.31	0.31	0.02	0.20	0.11	0.08	0.21	0.21	0.01	0.07	0.07
Crit Moves:		****		****				****		****		
Green/Cycle:	0.17	0.42	0.42	0.07	0.32	0.32	0.19	0.28	0.28	0.07	0.17	0.17
Volume/Cap:	0.64	0.74	0.74	0.35	0.64	0.34	0.42	0.74	0.74	0.21	0.42	0.42
Delay/Veh:	43.1	26.5	26.5	46.0	30.4	26.5	36.6	37.9	37.9	44.8	37.9	37.9
User DelAdj:	1.00	1.00	1.00	1.00	1.00	1.00	1.00	1.00	1.00	1.00	1.00	1.00
AdjDel/Veh:	43.1	26.5	26.5	46.0	30.4	26.5	36.6	37.9	37.9	44.8	37.9	37.9
LOS by Move:	D	C	C	D	C	C	D	D	D	D	D	D
HCM2kAvgQ:	7	16	16	2	11	4	4	12	12	1	4	4

Note: Queue reported is the number of cars per lane.

Traffix 7.9.0415 (c) 2007 Dowling Assoc. Licensed to MMA, LONG BEACH, CA

Overlook Parkway Extension
Future Alt A
AM Peak Hour

Level Of Service Computation Report
2000 HCM Operations Method (Future Volume Alternative)

Intersection #5 Madison St/Victoria Ave

Cycle (sec):	100	Critical Vol./Cap.(X):	0.978
Loss Time (sec):	16 (Y+R=4.0 sec)	Average Delay (sec/veh):	56.9
Optimal Cycle:	130	Level Of Service:	E

Street Name:	Madison St						Victoria Ave					
Approach:	North Bound			South Bound			East Bound			West Bound		
Movement:	L - T - R			L - T - R			L - T - R			L - T - R		
Control:	Split Phase			Split Phase			Split Phase			Split Phase		
Rights:	Include			Include			Ovl			Ovl		
Min. Green:	7	7	7	7	7	7	7	7	7	7	7	7
Lanes:	0 1	0 1	0	0 1	0 1	0	0 1	0 0	1	0 1	0 0	1
Volume Module:												
Base Vol:	269	1025	37	17	860	34	87	114	222	26	135	54
Growth Adj:	1.00	1.00	1.00	1.00	1.00	1.00	1.00	1.00	1.00	1.00	1.00	1.00
Initial Bse:	269	1025	37	17	860	34	87	114	222	26	135	54
Added Vol:	0	0	0	0	0	0	0	0	0	0	0	0
PasserByVol:	0	0	0	0	0	0	0	0	0	0	0	0
Initial Fut:	269	1025	37	17	860	34	87	114	222	26	135	54
User Adj:	1.00	1.00	1.00	1.00	1.00	1.00	1.00	1.00	1.00	1.00	1.00	1.00
PHF Adj:	1.00	1.00	1.00	1.00	1.00	1.00	1.00	1.00	1.00	1.00	1.00	1.00
PHF Volume:	269	1025	37	17	860	34	87	114	222	26	135	54
Reduct Vol:	0	0	0	0	0	0	0	0	0	0	0	0
Reduced Vol:	269	1025	37	17	860	34	87	114	222	26	135	54
PCE Adj:	1.00	1.00	1.00	1.00	1.00	1.00	1.00	1.00	1.00	1.00	1.00	1.00
MLF Adj:	1.00	1.00	1.00	1.00	1.00	1.00	1.00	1.00	1.00	1.00	1.00	1.00
FinalVolume:	269	1025	37	17	860	34	87	114	222	26	135	54
Saturation Flow Module:												
Sat/Lane:	1900	1900	1900	1900	1900	1900	1900	1900	1900	1900	1900	1900
Adjustment:	0.94	0.94	0.94	0.94	0.94	0.94	0.98	0.98	0.85	0.99	0.99	0.85
Lanes:	0.40	1.54	0.06	0.04	1.89	0.07	0.43	0.57	1.00	0.16	0.84	1.00
Final Sat.:	719	2741	99	67	3384	134	805	1055	1615	304	1580	1615
Capacity Analysis Module:												
Vol/Sat:	0.37	0.37	0.37	0.25	0.25	0.25	0.11	0.11	0.14	0.09	0.09	0.03
Crit Moves:	****				****		****				****	
Green/Cycle:	0.38	0.38	0.38	0.26	0.26	0.26	0.11	0.11	0.49	0.09	0.09	0.35
Volume/Cap:	0.98	0.98	0.98	0.98	0.98	0.98	0.98	0.98	0.28	0.98	0.98	0.10
Delay/Veh:	49.7	49.7	49.7	60.8	60.8	60.8	100.6	101	15.1	108.9	109	22.1
User DelAdj:	1.00	1.00	1.00	1.00	1.00	1.00	1.00	1.00	1.00	1.00	1.00	1.00
AdjDel/Veh:	49.7	49.7	49.7	60.8	60.8	60.8	100.6	101	15.1	108.9	109	22.1
LOS by Move:	D	D	D	E	E	E	F	F	B	F	F	C
HCM2kAvgQ:	28	28	28	20	20	20	10	10	4	9	9	1

Note: Queue reported is the number of cars per lane.

Traffix 7.9.0415 (c) 2007 Dowling Assoc. Licensed to MMA, LONG BEACH, CA

Overlook Parkway Extension
Future Alt A
AM Peak Hour

Level Of Service Computation Report
2000 HCM Operations Method (Future Volume Alternative)

Intersection #8 Washington St/Victoria Ave

Cycle (sec): 100 | Critical Vol./Cap.(X): 0.828
Loss Time (sec): 16 (Y+R=4.0 sec) | Average Delay (sec/veh): 36.0
Optimal Cycle: 93 | Level Of Service: D

Street Name:	Washington St						Victoria Ave					
Approach:	North Bound			South Bound			East Bound			West Bound		
Movement:	L - T - R			L - T - R			L - T - R			L - T - R		
Control:	Split Phase			Split Phase			Split Phase			Split Phase		
Rights:	Include			Include			Ovl			Ovl		
Min. Green:	7	7	7	7	7	7	7	7	7	7	7	7
Lanes:	0 1	0 1	0	0 1	0 1	0	0 1	0 0	1	0 1	0 0	1
Volume Module:												
Base Vol:	76	733	591	54	205	10	6	107	17	142	126	64
Growth Adj:	1.00	1.00	1.00	1.00	1.00	1.00	1.00	1.00	1.00	1.00	1.00	1.00
Initial Bse:	76	733	591	54	205	10	6	107	17	142	126	64
Added Vol:	0	0	0	0	0	0	0	0	0	0	0	0
PasserByVol:	0	0	0	0	0	0	0	0	0	0	0	0
Initial Fut:	76	733	591	54	205	10	6	107	17	142	126	64
User Adj:	1.00	1.00	1.00	1.00	1.00	1.00	1.00	1.00	1.00	1.00	1.00	1.00
PHF Adj:	1.00	1.00	1.00	1.00	1.00	1.00	1.00	1.00	1.00	1.00	1.00	1.00
PHF Volume:	76	733	591	54	205	10	6	107	17	142	126	64
Reduct Vol:	0	0	0	0	0	0	0	0	0	0	0	0
Reduced Vol:	76	733	591	54	205	10	6	107	17	142	126	64
PCE Adj:	1.00	1.00	1.00	1.00	1.00	1.00	1.00	1.00	1.00	1.00	1.00	1.00
MLF Adj:	1.00	1.00	1.00	1.00	1.00	1.00	1.00	1.00	1.00	1.00	1.00	1.00
FinalVolume:	76	733	591	54	205	10	6	107	17	142	126	64
Saturation Flow Module:												
Sat/Lane:	1900	1900	1900	1900	1900	1900	1900	1900	1900	1900	1900	1900
Adjustment:	0.89	0.89	0.89	0.93	0.93	0.93	1.00	1.00	0.85	0.97	0.97	0.85
Lanes:	0.11	1.05	0.84	0.40	1.53	0.07	0.05	0.95	1.00	0.53	0.47	1.00
Final Sat.:	183	1766	1424	713	2707	132	101	1794	1615	981	870	1615
Capacity Analysis Module:												
Vol/Sat:	0.42	0.42	0.42	0.08	0.08	0.08	0.06	0.06	0.01	0.14	0.14	0.04
Crit Moves:	****					****	****			****		
Green/Cycle:	0.50	0.50	0.50	0.09	0.09	0.09	0.07	0.07	0.57	0.17	0.17	0.27
Volume/Cap:	0.83	0.83	0.83	0.83	0.83	0.83	0.83	0.83	0.02	0.83	0.83	0.15
Delay/Veh:	24.8	24.8	24.8	60.6	60.6	60.6	78.2	78.2	9.2	55.8	55.8	28.2
User DelAdj:	1.00	1.00	1.00	1.00	1.00	1.00	1.00	1.00	1.00	1.00	1.00	1.00
AdjDel/Veh:	24.8	24.8	24.8	60.6	60.6	60.6	78.2	78.2	9.2	55.8	55.8	28.2
LOS by Move:	C	C	C	E	E	E	E	E	A	E	E	C
HCM2kAvgQ:	21	21	21	7	7	7	6	6	0	10	10	2

Note: Queue reported is the number of cars per lane.

Traffix 7.9.0415 (c) 2007 Dowling Assoc. Licensed to MMA, LONG BEACH, CA

Overlook Parkway Extension
Future Alt A
AM Peak Hour

Level Of Service Computation Report
2000 HCM Operations Method (Future Volume Alternative)

Intersection #9 Washington St/Overlook Pkwy

Cycle (sec): 100 | Critical Vol./Cap.(X): 1.000
Loss Time (sec): 12 (Y+R=4.0 sec) | Average Delay (sec/veh): 46.8
Optimal Cycle: 130 | Level Of Service: D

Street Name:	Washington St						Overlook Pkwy					
Approach:	North Bound			South Bound			East Bound			West Bound		
Movement:	L - T - R			L - T - R			L - T - R			L - T - R		
Control:	Protected			Protected			Protected			Protected		
Rights:	Include			Include			Include			Ovl		
Min. Green:	7	7	7	7	7	7	7	7	7	7	7	7
Lanes:	0 0	1 1	0	2 0	2 0	0	0 0	0 0	0	1 0	0 0	2
Volume Module:												
Base Vol:	0	1911	88	793	710	0	0	0	0	69	0	917
Growth Adj:	1.00	1.00	1.00	1.00	1.00	1.00	1.00	1.00	1.00	1.00	1.00	1.00
Initial Bse:	0	1911	88	793	710	0	0	0	0	69	0	917
Added Vol:	0	0	0	0	0	0	0	0	0	0	0	0
PasserByVol:	0	0	0	0	0	0	0	0	0	0	0	0
Initial Fut:	0	1911	88	793	710	0	0	0	0	69	0	917
User Adj:	1.00	1.00	1.00	1.00	1.00	1.00	1.00	1.00	1.00	1.00	1.00	1.00
PHF Adj:	1.00	1.00	1.00	1.00	1.00	1.00	1.00	1.00	1.00	1.00	1.00	1.00
PHF Volume:	0	1911	88	793	710	0	0	0	0	69	0	917
Reduct Vol:	0	0	0	0	0	0	0	0	0	0	0	0
Reduced Vol:	0	1911	88	793	710	0	0	0	0	69	0	917
PCE Adj:	1.00	1.00	1.00	1.00	1.00	1.00	1.00	1.00	1.00	1.00	1.00	1.00
MLF Adj:	1.00	1.00	1.00	1.00	1.00	1.00	1.00	1.00	1.00	1.00	1.00	1.00
FinalVolume:	0	1911	88	793	710	0	0	0	0	69	0	917
Saturation Flow Module:												
Sat/Lane:	1900	1900	1900	1900	1900	1900	1900	1900	1900	1900	1900	1900
Adjustment:	1.00	0.94	0.94	0.92	0.95	1.00	1.00	1.00	1.00	0.95	1.00	0.75
Lanes:	0.00	1.91	0.09	2.00	2.00	0.00	0.00	0.00	0.00	1.00	0.00	2.00
Final Sat.:	0	3427	158	3502	3610	0	0	0	0	1805	0	2842
Capacity Analysis Module:												
Vol/Sat:	0.00	0.56	0.56	0.23	0.20	0.00	0.00	0.00	0.00	0.04	0.00	0.32
Crit Moves:		****		****								****
Green/Cycle:	0.00	0.56	0.56	0.23	0.58	0.00	0.00	0.00	0.00	0.08	0.00	0.32
Volume/Cap:	0.00	1.00	1.00	1.00	0.34	0.00	0.00	0.00	0.00	0.46	0.00	1.00
Delay/Veh:	0.0	42.3	42.3	70.7	11.2	0.0	0.0	0.0	0.0	45.9	0.0	63.7
User DelAdj:	1.00	1.00	1.00	1.00	1.00	1.00	1.00	1.00	1.00	1.00	1.00	1.00
AdjDel/Veh:	0.0	42.3	42.3	70.7	11.2	0.0	0.0	0.0	0.0	45.9	0.0	63.7
LOS by Move:	A	D	D	E	B	A	A	A	A	D	A	E
HCM2kAvgQ:	0	41	41	19	6	0	0	0	0	3	0	23

Note: Queue reported is the number of cars per lane.

Traffix 7.9.0415 (c) 2007 Dowling Assoc. Licensed to MMA, LONG BEACH, CA

Overlook Parkway Extension
Future Alt A
AM Peak Hour

Level Of Service Computation Report
2000 HCM Operations Method (Future Volume Alternative)

Intersection #14 Alessandro Blvd/Overlook Pkwy

Cycle (sec):	100	Critical Vol./Cap.(X):	1.507
Loss Time (sec):	16 (Y+R=4.0 sec)	Average Delay (sec/veh):	174.3
Optimal Cycle:	130	Level Of Service:	F

Street Name:	Alessandro Blvd									Overlook Pkwy		
Approach:	North Bound			South Bound			East Bound			West Bound		
Movement:	L - T - R			L - T - R			L - T - R			L - T - R		
Control:	Protected			Protected			Protected			Protected		
Rights:	Include			Include			Include			Include		
Min. Green:	7	7	7	7	7	7	7	7	7	7	7	7
Lanes:	1 0	3 0	1	1 0	2 1	0	1 0	1 1	0	2 0	1 1	0
Volume Module:												
Base Vol:	568	2686	1175	4	1309	81	157	87	621	488	215	11
Growth Adj:	1.00	1.00	1.00	1.00	1.00	1.00	1.00	1.00	1.00	1.00	1.00	1.00
Initial Bse:	568	2686	1175	4	1309	81	157	87	621	488	215	11
Added Vol:	0	0	0	0	0	0	0	0	0	0	0	0
PasserByVol:	0	0	0	0	0	0	0	0	0	0	0	0
Initial Fut:	568	2686	1175	4	1309	81	157	87	621	488	215	11
User Adj:	1.00	1.00	1.00	1.00	1.00	1.00	1.00	1.00	1.00	1.00	1.00	1.00
PHF Adj:	1.00	1.00	1.00	1.00	1.00	1.00	1.00	1.00	1.00	1.00	1.00	1.00
PHF Volume:	568	2686	1175	4	1309	81	157	87	621	488	215	11
Reduct Vol:	0	0	0	0	0	0	0	0	0	0	0	0
Reduced Vol:	568	2686	1175	4	1309	81	157	87	621	488	215	11
PCE Adj:	1.00	1.00	1.00	1.00	1.00	1.00	1.00	1.00	1.00	1.00	1.00	1.00
MLF Adj:	1.00	1.00	1.00	1.00	1.00	1.00	1.00	1.00	1.00	1.00	1.00	1.00
FinalVolume:	568	2686	1175	4	1309	81	157	87	621	488	215	11
Saturation Flow Module:												
Sat/Lane:	1900	1900	1900	1900	1900	1900	1900	1900	1900	1900	1900	1900
Adjustment:	0.95	0.91	0.85	0.95	0.90	0.90	0.95	0.82	0.82	0.92	0.94	0.94
Lanes:	1.00	3.00	1.00	1.00	2.83	0.17	1.00	1.00	1.00	2.00	1.90	0.10
Final Sat.:	1805	5187	1615	1805	4841	300	1805	1567	1567	3502	3410	174
Capacity Analysis Module:												
Vol/Sat:	0.31	0.52	0.73	0.00	0.27	0.27	0.09	0.06	0.40	0.14	0.06	0.06
Crit Moves:			****	****					****	****		
Green/Cycle:	0.28	0.44	0.44	0.07	0.24	0.24	0.18	0.24	0.24	0.08	0.15	0.15
Volume/Cap:	1.14	1.17	1.64	0.03	1.14	1.14	0.48	0.23	1.64	1.64	0.43	0.43
Delay/Veh:	120.8	108	322.4	43.4	111	111.3	37.9	30.5	336.5	348.8	39.5	39.5
User DelAdj:	1.00	1.00	1.00	1.00	1.00	1.00	1.00	1.00	1.00	1.00	1.00	1.00
AdjDel/Veh:	120.8	108	322.4	43.4	111	111.3	37.9	30.5	336.5	348.8	39.5	39.5
LOS by Move:	F	F	F	D	F	F	D	C	F	F	D	D
HCM2kAvgQ:	30	50	92	0	27	27	5	2	52	21	4	4

Note: Queue reported is the number of cars per lane.

Traffix 7.9.0415 (c) 2007 Dowling Assoc. Licensed to MMA, LONG BEACH, CA

Overlook Parkway Extension
Future Alt A
AM Peak Hour

Level Of Service Computation Report
2000 HCM Operations Method (Future Volume Alternative)

Intersection #16 Crystal View Ter/Overlook Pkwy

Cycle (sec):	100	Critical Vol./Cap.(X):	0.359
Loss Time (sec):	8 (Y+R=4.0 sec)	Average Delay (sec/veh):	8.2
Optimal Cycle:	26	Level Of Service:	A

Street Name:	Crystal View Ter									Overlook Pkwy		
Approach:	North Bound			South Bound			East Bound			West Bound		
Movement:	L - T - R			L - T - R			L - T - R			L - T - R		
Control:	Permitted			Permitted			Permitted			Permitted		
Rights:	Include			Include			Include			Include		
Min. Green:	7	7	7	7	7	7	7	7	7	7	7	7
Lanes:	0 0	1! 0	0	0 0	1! 0	0	1 0	1 1	0	1 0	1 1	0
Volume Module:												
Base Vol:	94	0	24	0	0	0	0	792	29	2	893	0
Growth Adj:	1.00	1.00	1.00	1.00	1.00	1.00	1.00	1.00	1.00	1.00	1.00	1.00
Initial Bse:	94	0	24	0	0	0	0	792	29	2	893	0
Added Vol:	0	0	0	0	0	0	0	0	0	0	0	0
PasserByVol:	0	0	0	0	0	0	0	0	0	0	0	0
Initial Fut:	94	0	24	0	0	0	0	792	29	2	893	0
User Adj:	1.00	1.00	1.00	1.00	1.00	1.00	1.00	1.00	1.00	1.00	1.00	1.00
PHF Adj:	1.00	1.00	1.00	1.00	1.00	1.00	1.00	1.00	1.00	1.00	1.00	1.00
PHF Volume:	94	0	24	0	0	0	0	792	29	2	893	0
Reduct Vol:	0	0	0	0	0	0	0	0	0	0	0	0
Reduced Vol:	94	0	24	0	0	0	0	792	29	2	893	0
PCE Adj:	1.00	1.00	1.00	1.00	1.00	1.00	1.00	1.00	1.00	1.00	1.00	1.00
MLF Adj:	1.00	1.00	1.00	1.00	1.00	1.00	1.00	1.00	1.00	1.00	1.00	1.00
FinalVolume:	94	0	24	0	0	0	0	792	29	2	893	0
Saturation Flow Module:												
Sat/Lane:	1900	1900	1900	1900	1900	1900	1900	1900	1900	1900	1900	1900
Adjustment:	0.75	1.00	0.75	1.00	1.00	1.00	1.00	0.95	0.95	0.31	0.95	0.95
Lanes:	0.80	0.00	0.20	0.00	1.00	0.00	1.00	1.93	0.07	1.00	2.00	0.00
Final Sat.:	1130	0	288	0	1900	0	1900	3465	127	587	3610	0
Capacity Analysis Module:												
Vol/Sat:	0.08	0.00	0.08	0.00	0.00	0.00	0.00	0.23	0.23	0.00	0.25	0.00
Crit Moves:	****										****	
Green/Cycle:	0.23	0.00	0.23	0.00	0.00	0.00	0.00	0.69	0.69	0.69	0.69	0.00
Volume/Cap:	0.36	0.00	0.36	0.00	0.00	0.00	0.00	0.33	0.33	0.00	0.36	0.00
Delay/Veh:	32.9	0.0	32.9	0.0	0.0	0.0	0.0	6.4	6.4	4.9	6.5	0.0
User DelAdj:	1.00	1.00	1.00	1.00	1.00	1.00	1.00	1.00	1.00	1.00	1.00	1.00
AdjDel/Veh:	32.9	0.0	32.9	0.0	0.0	0.0	0.0	6.4	6.4	4.9	6.5	0.0
LOS by Move:	C	A	C	A	A	A	A	A	A	A	A	A
HCM2kAvgQ:	3	0	3	0	0	0	0	5	5	0	6	0

Note: Queue reported is the number of cars per lane.

Traffix 7.9.0415 (c) 2007 Dowling Assoc. Licensed to MMA, LONG BEACH, CA

Overlook Parkway Extension
Future Alt A
AM Peak Hour

Level Of Service Computation Report
2000 HCM Operations Method (Future Volume Alternative)

Intersection #17 Kingdom Dr/Overlook Pkwy

Cycle (sec):	100	Critical Vol./Cap.(X):	0.450
Loss Time (sec):	8 (Y+R=4.0 sec)	Average Delay (sec/veh):	14.7
Optimal Cycle:	29	Level Of Service:	B

Street Name:	Kingdom Dr									Overlook Pkwy		
Approach:	North Bound			South Bound			East Bound			West Bound		
Movement:	L - T - R			L - T - R			L - T - R			L - T - R		
Control:	Permitted			Permitted			Permitted			Permitted		
Rights:	Include			Include			Include			Include		
Min. Green:	7	7	7	7	7	7	7	7	7	7	7	7
Lanes:	0 0	1! 0	0	1 0	0 0	0	1 0	1 1	0	1 0	1 1	0
Volume Module:												
Base Vol:	119	0	130	7	0	0	0	707	50	36	894	0
Growth Adj:	1.00	1.00	1.00	1.00	1.00	1.00	1.00	1.00	1.00	1.00	1.00	1.00
Initial Bse:	119	0	130	7	0	0	0	707	50	36	894	0
Added Vol:	0	0	0	0	0	0	0	0	0	0	0	0
PasserByVol:	0	0	0	0	0	0	0	0	0	0	0	0
Initial Fut:	119	0	130	7	0	0	0	707	50	36	894	0
User Adj:	1.00	1.00	1.00	1.00	1.00	1.00	1.00	1.00	1.00	1.00	1.00	1.00
PHF Adj:	1.00	1.00	1.00	1.00	1.00	1.00	1.00	1.00	1.00	1.00	1.00	1.00
PHF Volume:	119	0	130	7	0	0	0	707	50	36	894	0
Reduct Vol:	0	0	0	0	0	0	0	0	0	0	0	0
Reduced Vol:	119	0	130	7	0	0	0	707	50	36	894	0
PCE Adj:	1.00	1.00	1.00	1.00	1.00	1.00	1.00	1.00	1.00	1.00	1.00	1.00
MLF Adj:	1.00	1.00	1.00	1.00	1.00	1.00	1.00	1.00	1.00	1.00	1.00	1.00
FinalVolume:	119	0	130	7	0	0	0	707	50	36	894	0
Saturation Flow Module:												
Sat/Lane:	1900	1900	1900	1900	1900	1900	1900	1900	1900	1900	1900	1900
Adjustment:	0.79	1.00	0.79	0.85	1.00	1.00	1.00	0.94	0.94	0.30	0.95	0.95
Lanes:	0.48	0.00	0.52	1.00	0.00	0.00	1.00	1.87	0.13	1.00	2.00	0.00
Final Sat.:	716	0	782	1615	0	0	1900	3338	236	572	3610	0
Capacity Analysis Module:												
Vol/Sat:	0.17	0.00	0.17	0.00	0.00	0.00	0.00	0.21	0.21	0.06	0.25	0.00
Crit Moves:	****										****	
Green/Cycle:	0.37	0.00	0.37	0.37	0.00	0.00	0.00	0.55	0.55	0.55	0.55	0.00
Volume/Cap:	0.45	0.00	0.45	0.01	0.00	0.00	0.00	0.38	0.38	0.11	0.45	0.00
Delay/Veh:	24.4	0.0	24.4	20.0	0.0	0.0	0.0	12.9	12.9	10.9	13.6	0.0
User DelAdj:	1.00	1.00	1.00	1.00	1.00	1.00	1.00	1.00	1.00	1.00	1.00	1.00
AdjDel/Veh:	24.4	0.0	24.4	20.0	0.0	0.0	0.0	12.9	12.9	10.9	13.6	0.0
LOS by Move:	C	A	C	B	A	A	A	B	B	B	B	A
HCM2kAvgQ:	6	0	6	0	0	0	0	7	7	1	9	0

Note: Queue reported is the number of cars per lane.

Traffix 7.9.0415 (c) 2007 Dowling Assoc. Licensed to MMA, LONG BEACH, CA

Overlook Parkway Extension
Future Alt A
AM Peak Hour

Level Of Service Computation Report
2000 HCM Operations Method (Future Volume Alternative)

Intersection #19 Trautwein Rd/John F. Kennedy Dr

Cycle (sec):	100	Critical Vol./Cap.(X):	1.057
Loss Time (sec):	16 (Y+R=4.0 sec)	Average Delay (sec/veh):	78.0
Optimal Cycle:	130	Level Of Service:	E

Street Name:	Trautwein Rd									John F. Kennedy Dr		
Approach:	North Bound			South Bound			East Bound			West Bound		
Movement:	L - T - R			L - T - R			L - T - R			L - T - R		
Control:	Protected			Protected			Protected			Protected		
Rights:	Include			Ovl			Include			Include		
Min. Green:	7	7	7	7	7	7	7	7	7	7	7	7
Lanes:	1 0	2 0	1	1 0	2 0	1	2 0	1 0	1	1 0	1 0	1
Volume Module:												
Base Vol:	150	2179	83	8	782	760	773	91	101	126	112	64
Growth Adj:	1.00	1.00	1.00	1.00	1.00	1.00	1.00	1.00	1.00	1.00	1.00	1.00
Initial Bse:	150	2179	83	8	782	760	773	91	101	126	112	64
Added Vol:	0	0	0	0	0	0	0	0	0	0	0	0
PasserByVol:	0	0	0	0	0	0	0	0	0	0	0	0
Initial Fut:	150	2179	83	8	782	760	773	91	101	126	112	64
User Adj:	1.00	1.00	1.00	1.00	1.00	1.00	1.00	1.00	1.00	1.00	1.00	1.00
PHF Adj:	1.00	1.00	1.00	1.00	1.00	1.00	1.00	1.00	1.00	1.00	1.00	1.00
PHF Volume:	150	2179	83	8	782	760	773	91	101	126	112	64
Reduct Vol:	0	0	0	0	0	0	0	0	0	0	0	0
Reduced Vol:	150	2179	83	8	782	760	773	91	101	126	112	64
PCE Adj:	1.00	1.00	1.00	1.00	1.00	1.00	1.00	1.00	1.00	1.00	1.00	1.00
MLF Adj:	1.00	1.00	1.00	1.00	1.00	1.00	1.00	1.00	1.00	1.00	1.00	1.00
FinalVolume:	150	2179	83	8	782	760	773	91	101	126	112	64
Saturation Flow Module:												
Sat/Lane:	1900	1900	1900	1900	1900	1900	1900	1900	1900	1900	1900	1900
Adjustment:	0.95	0.95	0.85	0.95	0.95	0.85	0.92	1.00	0.85	0.95	1.00	0.85
Lanes:	1.00	2.00	1.00	1.00	2.00	1.00	2.00	1.00	1.00	1.00	1.00	1.00
Final Sat.:	1805	3610	1615	1805	3610	1615	3502	1900	1615	1805	1900	1615
Capacity Analysis Module:												
Vol/Sat:	0.08	0.60	0.05	0.00	0.22	0.47	0.22	0.05	0.06	0.07	0.06	0.04
Crit Moves:		****		****			****				****	
Green/Cycle:	0.15	0.51	0.51	0.07	0.44	0.62	0.19	0.13	0.13	0.13	0.07	0.07
Volume/Cap:	0.57	1.18	0.10	0.06	0.50	0.75	1.18	0.37	0.49	0.54	0.84	0.57
Delay/Veh:	42.8	110	12.6	43.6	20.5	16.6	135.8	40.8	42.3	43.4	81.8	51.6
User DelAdj:	1.00	1.00	1.00	1.00	1.00	1.00	1.00	1.00	1.00	1.00	1.00	1.00
AdjDel/Veh:	42.8	110	12.6	43.6	20.5	16.6	135.8	40.8	42.3	43.4	81.8	51.6
LOS by Move:	D	F	B	D	C	B	F	D	D	D	F	D
HCM2kAvgQ:	5	59	1	0	9	18	23	3	3	4	6	3

Note: Queue reported is the number of cars per lane.

Traffix 7.9.0415 (c) 2007 Dowling Assoc. Licensed to MMA, LONG BEACH, CA

Overlook Parkway Extension
Future Alt A
AM Peak Hour

Level Of Service Computation Report
2000 HCM Operations Method (Future Volume Alternative)

Intersection #24 Hawarden Dr/Overlook Pkwy

Cycle (sec):	100	Critical Vol./Cap.(X):	0.391
Loss Time (sec):	8 (Y+R=4.0 sec)	Average Delay (sec/veh):	8.5
Optimal Cycle:	27	Level Of Service:	A

Street Name:	Hawarden Dr						Overlook Pkwy					
Approach:	North Bound			South Bound			East Bound			West Bound		
Movement:	L -	T -	R	L -	T -	R	L -	T -	R	L -	T -	R
Control:	Permitted			Permitted			Permitted			Permitted		
Rights:	Include			Include			Include			Include		
Min. Green:	7	7	7	7	7	7	7	7	7	7	7	7
Lanes:	0 0	1! 0	0	0 0	1! 0	0	1 0	1 1	0	1 0	1 1	0
Volume Module:												
Base Vol:	67	62	5	15	4	25	81	661	41	1	908	71
Growth Adj:	1.00	1.00	1.00	1.00	1.00	1.00	1.00	1.00	1.00	1.00	1.00	1.00
Initial Bse:	67	62	5	15	4	25	81	661	41	1	908	71
Added Vol:	0	0	0	0	0	0	0	0	0	0	0	0
PasserByVol:	0	0	0	0	0	0	0	0	0	0	0	0
Initial Fut:	67	62	5	15	4	25	81	661	41	1	908	71
User Adj:	1.00	1.00	1.00	1.00	1.00	1.00	1.00	1.00	1.00	1.00	1.00	1.00
PHF Adj:	1.00	1.00	1.00	1.00	1.00	1.00	1.00	1.00	1.00	1.00	1.00	1.00
PHF Volume:	67	62	5	15	4	25	81	661	41	1	908	71
Reduct Vol:	0	0	0	0	0	0	0	0	0	0	0	0
Reduced Vol:	67	62	5	15	4	25	81	661	41	1	908	71
PCE Adj:	1.00	1.00	1.00	1.00	1.00	1.00	1.00	1.00	1.00	1.00	1.00	1.00
MLF Adj:	1.00	1.00	1.00	1.00	1.00	1.00	1.00	1.00	1.00	1.00	1.00	1.00
FinalVolume:	67	62	5	15	4	25	81	661	41	1	908	71
Saturation Flow Module:												
Sat/Lane:	1900	1900	1900	1900	1900	1900	1900	1900	1900	1900	1900	1900
Adjustment:	0.82	0.82	0.82	0.83	0.83	0.83	0.26	0.94	0.94	0.36	0.94	0.94
Lanes:	0.50	0.46	0.04	0.34	0.09	0.57	1.00	1.88	0.12	1.00	1.85	0.15
Final Sat.:	784	725	58	539	144	899	494	3369	209	680	3311	259
Capacity Analysis Module:												
Vol/Sat:	0.09	0.09	0.09	0.03	0.03	0.03	0.16	0.20	0.20	0.00	0.27	0.27
Crit Moves:		****									****	
Green/Cycle:	0.22	0.22	0.22	0.22	0.22	0.22	0.70	0.70	0.70	0.70	0.70	0.70
Volume/Cap:	0.39	0.39	0.39	0.13	0.13	0.13	0.23	0.28	0.28	0.00	0.39	0.39
Delay/Veh:	34.1	34.1	34.1	31.6	31.6	31.6	5.7	5.6	5.6	4.5	6.2	6.2
User DelAdj:	1.00	1.00	1.00	1.00	1.00	1.00	1.00	1.00	1.00	1.00	1.00	1.00
AdjDel/Veh:	34.1	34.1	34.1	31.6	31.6	31.6	5.7	5.6	5.6	4.5	6.2	6.2
LOS by Move:	C	C	C	C	C	C	A	A	A	A	A	A
HCM2kAvgQ:	4	4	4	1	1	1	1	4	4	0	7	7

Note: Queue reported is the number of cars per lane.

Traffix 7.9.0415 (c) 2007 Dowling Assoc. Licensed to MMA, LONG BEACH, CA

Overlook Parkway Extension
Future Alt A
AM Peak Hour

Level Of Service Computation Report
2000 HCM Operations Method (Future Volume Alternative)

Intersection #28 Orozco Dr/Overlook Pkwy

Cycle (sec):	100	Critical Vol./Cap.(X):	0.352
Loss Time (sec):	8 (Y+R=4.0 sec)	Average Delay (sec/veh):	3.2
Optimal Cycle:	25	Level Of Service:	A

Street Name:	Orozco Dr						Overlook Pkwy					
Approach:	North Bound			South Bound			East Bound			West Bound		
Movement:	L -	T -	R	L -	T -	R	L -	T -	R	L -	T -	R
Control:	Permitted			Permitted			Permitted			Permitted		
Rights:	Include			Include			Include			Include		
Min. Green:	7	7	7	7	7	7	7	7	7	7	7	7
Lanes:	0 0	1! 0	0	0 0	1! 0	0	1 0	1 1	0	1 0	1 1	0
Volume Module:												
Base Vol:	7	4	3	37	2	2	28	639	4	3	891	149
Growth Adj:	1.00	1.00	1.00	1.00	1.00	1.00	1.00	1.00	1.00	1.00	1.00	1.00
Initial Bse:	7	4	3	37	2	2	28	639	4	3	891	149
Added Vol:	0	0	0	0	0	0	0	0	0	0	0	0
PasserByVol:	0	0	0	0	0	0	0	0	0	0	0	0
Initial Fut:	7	4	3	37	2	2	28	639	4	3	891	149
User Adj:	1.00	1.00	1.00	1.00	1.00	1.00	1.00	1.00	1.00	1.00	1.00	1.00
PHF Adj:	1.00	1.00	1.00	1.00	1.00	1.00	1.00	1.00	1.00	1.00	1.00	1.00
PHF Volume:	7	4	3	37	2	2	28	639	4	3	891	149
Reduct Vol:	0	0	0	0	0	0	0	0	0	0	0	0
Reduced Vol:	7	4	3	37	2	2	28	639	4	3	891	149
PCE Adj:	1.00	1.00	1.00	1.00	1.00	1.00	1.00	1.00	1.00	1.00	1.00	1.00
MLF Adj:	1.00	1.00	1.00	1.00	1.00	1.00	1.00	1.00	1.00	1.00	1.00	1.00
FinalVolume:	7	4	3	37	2	2	28	639	4	3	891	149
Saturation Flow Module:												
Sat/Lane:	1900	1900	1900	1900	1900	1900	1900	1900	1900	1900	1900	1900
Adjustment:	0.84	0.84	0.84	0.72	0.72	0.72	0.27	0.95	0.95	0.40	0.93	0.93
Lanes:	0.50	0.29	0.21	0.90	0.05	0.05	1.00	1.99	0.01	1.00	1.71	0.29
Final Sat.:	795	454	341	1234	67	67	504	3584	22	762	3028	506
Capacity Analysis Module:												
Vol/Sat:	0.01	0.01	0.01	0.03	0.03	0.03	0.06	0.18	0.18	0.00	0.29	0.29
Crit Moves:					****						****	
Green/Cycle:	0.09	0.09	0.09	0.09	0.09	0.09	0.83	0.83	0.83	0.83	0.83	0.83
Volume/Cap:	0.10	0.10	0.10	0.35	0.35	0.35	0.07	0.21	0.21	0.00	0.35	0.35
Delay/Veh:	42.6	42.6	42.6	45.0	45.0	45.0	1.5	1.7	1.7	1.4	2.0	2.0
User DelAdj:	1.00	1.00	1.00	1.00	1.00	1.00	1.00	1.00	1.00	1.00	1.00	1.00
AdjDel/Veh:	42.6	42.6	42.6	45.0	45.0	45.0	1.5	1.7	1.7	1.4	2.0	2.0
LOS by Move:	D	D	D	D	D	D	A	A	A	A	A	A
HCM2kAvgQ:	0	0	0	2	2	2	0	2	2	0	4	4

Note: Queue reported is the number of cars per lane.

Traffix 7.9.0415 (c) 2007 Dowling Assoc. Licensed to MMA, LONG BEACH, CA

Overlook Parkway Extension
Future Alt A
PM Peak Hour

Level Of Service Computation Report
2000 HCM Operations Method (Future Volume Alternative)

Intersection #3 Madison St/Indiana Ave

Cycle (sec):	100	Critical Vol./Cap.(X):	1.148
Loss Time (sec):	16 (Y+R=4.0 sec)	Average Delay (sec/veh):	94.0
Optimal Cycle:	130	Level Of Service:	F

Street Name:	Madison St									Indiana Ave		
Approach:	North Bound			South Bound			East Bound			West Bound		
Movement:	L -	T -	R	L -	T -	R	L -	T -	R	L -	T -	R
Control:	Protected			Protected			Protected			Protected		
Rights:	Include			Include			Include			Ovl		
Min. Green:	7	7	7	7	7	7	7	7	7	7	7	7
Lanes:	1 0	1 1	0	1 0	1 1	0	1 0	1 1	0	1 0	2 0	1
Volume Module:												
Base Vol:	176	1013	54	465	1389	340	447	624	149	53	453	461
Growth Adj:	1.00	1.00	1.00	1.00	1.00	1.00	1.00	1.00	1.00	1.00	1.00	1.00
Initial Bse:	176	1013	54	465	1389	340	447	624	149	53	453	461
Added Vol:	0	0	0	0	0	0	0	0	0	0	0	0
PasserByVol:	0	0	0	0	0	0	0	0	0	0	0	0
Initial Fut:	176	1013	54	465	1389	340	447	624	149	53	453	461
User Adj:	1.00	1.00	1.00	1.00	1.00	1.00	1.00	1.00	1.00	1.00	1.00	1.00
PHF Adj:	1.00	1.00	1.00	1.00	1.00	1.00	1.00	1.00	1.00	1.00	1.00	1.00
PHF Volume:	176	1013	54	465	1389	340	447	624	149	53	453	461
Reduct Vol:	0	0	0	0	0	0	0	0	0	0	0	0
Reduced Vol:	176	1013	54	465	1389	340	447	624	149	53	453	461
PCE Adj:	1.00	1.00	1.00	1.00	1.00	1.00	1.00	1.00	1.00	1.00	1.00	1.00
MLF Adj:	1.00	1.00	1.00	1.00	1.00	1.00	1.00	1.00	1.00	1.00	1.00	1.00
FinalVolume:	176	1013	54	465	1389	340	447	624	149	53	453	461
Saturation Flow Module:												
Sat/Lane:	1900	1900	1900	1900	1900	1900	1900	1900	1900	1900	1900	1900
Adjustment:	0.95	0.94	0.94	0.95	0.92	0.92	0.95	0.92	0.92	0.95	0.95	0.85
Lanes:	1.00	1.90	0.10	1.00	1.61	0.39	1.00	1.61	0.39	1.00	2.00	1.00
Final Sat.:	1805	3400	181	1805	2813	689	1805	2830	676	1805	3610	1615
Capacity Analysis Module:												
Vol/Sat:	0.10	0.30	0.30	0.26	0.49	0.49	0.25	0.22	0.22	0.03	0.13	0.29
Crit Moves:	****				****		****				****	
Green/Cycle:	0.08	0.28	0.28	0.24	0.43	0.43	0.22	0.25	0.25	0.08	0.11	0.35
Volume/Cap:	1.15	1.08	1.08	1.08	1.15	1.15	1.15	0.89	0.89	0.37	1.15	0.82
Delay/Veh:	163.8	88.5	88.5	104.2	103	103.4	131.7	48.1	48.1	45.4	137	39.1
User DelAdj:	1.00	1.00	1.00	1.00	1.00	1.00	1.00	1.00	1.00	1.00	1.00	1.00
AdjDel/Veh:	163.8	88.5	88.5	104.2	103	103.4	131.7	48.1	48.1	45.4	137	39.1
LOS by Move:	F	F	F	F	F	F	F	D	D	D	F	D
HCM2kAvgQ:	11	27	27	23	46	46	24	16	16	2	14	15

Note: Queue reported is the number of cars per lane.

Traffix 7.9.0415 (c) 2007 Dowling Assoc. Licensed to MMA, LONG BEACH, CA

Overlook Parkway Extension
Future Alt A
PM Peak Hour

Level Of Service Computation Report
2000 HCM Operations Method (Future Volume Alternative)

Intersection #4 Madison St/Lincoln Ave

Cycle (sec):	100	Critical Vol./Cap.(X):	0.929
Loss Time (sec):	16 (Y+R=4.0 sec)	Average Delay (sec/veh):	51.6
Optimal Cycle:	129	Level Of Service:	D

Street Name:	Madison St									Lincoln Ave		
Approach:	North Bound			South Bound			East Bound			West Bound		
Movement:	L -	T -	R	L -	T -	R	L -	T -	R	L -	T -	R
Control:	Protected			Protected			Protected			Protected		
Rights:	Include			Include			Include			Include		
Min. Green:	7	7	7	7	7	7	7	7	7	7	7	7
Lanes:	1 0	1 1	0	1 0	2 0	1	1 0	0 1	0	1 0	1 1	0
Volume Module:												
Base Vol:	220	849	21	33	1194	150	190	262	288	24	208	34
Growth Adj:	1.00	1.00	1.00	1.00	1.00	1.00	1.00	1.00	1.00	1.00	1.00	1.00
Initial Bse:	220	849	21	33	1194	150	190	262	288	24	208	34
Added Vol:	0	0	0	0	0	0	0	0	0	0	0	0
PasserByVol:	0	0	0	0	0	0	0	0	0	0	0	0
Initial Fut:	220	849	21	33	1194	150	190	262	288	24	208	34
User Adj:	1.00	1.00	1.00	1.00	1.00	1.00	1.00	1.00	1.00	1.00	1.00	1.00
PHF Adj:	1.00	1.00	1.00	1.00	1.00	1.00	1.00	1.00	1.00	1.00	1.00	1.00
PHF Volume:	220	849	21	33	1194	150	190	262	288	24	208	34
Reduct Vol:	0	0	0	0	0	0	0	0	0	0	0	0
Reduced Vol:	220	849	21	33	1194	150	190	262	288	24	208	34
PCE Adj:	1.00	1.00	1.00	1.00	1.00	1.00	1.00	1.00	1.00	1.00	1.00	1.00
MLF Adj:	1.00	1.00	1.00	1.00	1.00	1.00	1.00	1.00	1.00	1.00	1.00	1.00
FinalVolume:	220	849	21	33	1194	150	190	262	288	24	208	34
Saturation Flow Module:												
Sat/Lane:	1900	1900	1900	1900	1900	1900	1900	1900	1900	1900	1900	1900
Adjustment:	0.95	0.95	0.95	0.95	0.95	0.85	0.95	0.92	0.92	0.95	0.93	0.93
Lanes:	1.00	1.95	0.05	1.00	2.00	1.00	1.00	0.48	0.52	1.00	1.72	0.28
Final Sat.:	1805	3509	87	1805	3610	1615	1805	834	916	1805	3038	497
Capacity Analysis Module:												
Vol/Sat:	0.12	0.24	0.24	0.02	0.33	0.09	0.11	0.31	0.31	0.01	0.07	0.07
Crit Moves:	****				****			****		****		
Green/Cycle:	0.12	0.35	0.35	0.10	0.33	0.33	0.23	0.32	0.32	0.07	0.15	0.15
Volume/Cap:	1.00	0.69	0.69	0.18	1.00	0.28	0.45	1.00	1.00	0.19	0.44	0.44
Delay/Veh:	103.2	29.3	29.3	41.5	58.3	24.9	33.8	71.4	71.4	44.6	39.0	39.0
User DelAdj:	1.00	1.00	1.00	1.00	1.00	1.00	1.00	1.00	1.00	1.00	1.00	1.00
AdjDel/Veh:	103.2	29.3	29.3	41.5	58.3	24.9	33.8	71.4	71.4	44.6	39.0	39.0
LOS by Move:	F	C	C	D	E	C	C	E	E	D	D	D
HCM2kAvgQ:	11	13	13	1	26	3	5	23	23	1	4	4

Note: Queue reported is the number of cars per lane.

Traffix 7.9.0415 (c) 2007 Dowling Assoc. Licensed to MMA, LONG BEACH, CA

Overlook Parkway Extension
Future Alt A
PM Peak Hour

Level Of Service Computation Report
2000 HCM Operations Method (Future Volume Alternative)

Intersection #5 Madison St/Victoria Ave

Cycle (sec):	100	Critical Vol./Cap.(X):	1.145
Loss Time (sec):	16 (Y+R=4.0 sec)	Average Delay (sec/veh):	124.2
Optimal Cycle:	130	Level Of Service:	F

Street Name:	Madison St								Victoria Ave								
Approach:	North Bound				South Bound				East Bound				West Bound				
Movement:	L	-	T	-	R	L	-	T	-	R	L	-	T	-	R	L	-	T	-	R
Control:	Split Phase					Split Phase					Split Phase					Split Phase				
Rights:	Include					Include					Ovl					Ovl				
Min. Green:	7	7	7			7	7	7			7	7	7			7	7	7		
Lanes:	0	1	0	1	0	0	1	0	1	0	0	1	0	0	1	0	1	0	0	1
Volume Module:																				
Base Vol:	264	1026		71		58	1457		62		75	117		288		12	53		17	
Growth Adj:	1.00	1.00		1.00		1.00	1.00		1.00		1.00	1.00		1.00		1.00	1.00		1.00	
Initial Bse:	264	1026		71		58	1457		62		75	117		288		12	53		17	
Added Vol:	0	0		0		0	0		0		0	0		0		0	0		0	
PasserByVol:	0	0		0		0	0		0		0	0		0		0	0		0	
Initial Fut:	264	1026		71		58	1457		62		75	117		288		12	53		17	
User Adj:	1.00	1.00		1.00		1.00	1.00		1.00		1.00	1.00		1.00		1.00	1.00		1.00	
PHF Adj:	1.00	1.00		1.00		1.00	1.00		1.00		1.00	1.00		1.00		1.00	1.00		1.00	
PHF Volume:	264	1026		71		58	1457		62		75	117		288		12	53		17	
Reduct Vol:	0	0		0		0	0		0		0	0		0		0	0		0	
Reduced Vol:	264	1026		71		58	1457		62		75	117		288		12	53		17	
PCE Adj:	1.00	1.00		1.00		1.00	1.00		1.00		1.00	1.00		1.00		1.00	1.00		1.00	
MLF Adj:	1.00	1.00		1.00		1.00	1.00		1.00		1.00	1.00		1.00		1.00	1.00		1.00	
FinalVolume:	264	1026		71		58	1457		62		75	117		288		12	53		17	
Saturation Flow Module:																				
Sat/Lane:	1900	1900		1900		1900	1900		1900		1900	1900		1900		1900	1900		1900	
Adjustment:	0.93	0.93		0.93		0.94	0.94		0.94		0.98	0.98		0.85		0.99	0.99		0.85	
Lanes:	0.39	1.51		0.10		0.07	1.85		0.08		0.39	0.61		1.00		0.18	0.82		1.00	
Final Sat.:	688	2673		185		132	3309		141		728	1136		1615		348	1535		1615	
Capacity Analysis Module:																				
Vol/Sat:	0.38	0.38		0.38		0.44	0.44		0.44		0.10	0.10		0.18		0.03	0.03		0.01	
Crit Moves:				****					****			****					****			
Green/Cycle:	0.32	0.32		0.32		0.37	0.37		0.37		0.09	0.09		0.40		0.07	0.07		0.44	
Volume/Cap:	1.20	1.20		1.20		1.20	1.20		1.20		1.20	1.20		0.44		0.49	0.49		0.02	
Delay/Veh:	134.6	135		134.6		131.1	131		131.1		182.4	182		22.1		47.7	47.7		16.1	
User DelAdj:	1.00	1.00		1.00		1.00	1.00		1.00		1.00	1.00		1.00		1.00	1.00		1.00	
AdjDel/Veh:	134.6	135		134.6		131.1	131		131.1		182.4	182		22.1		47.7	47.7		16.1	
LOS by Move:	F	F		F		F	F		F		F	F		C		D	D		B	
HCM2kAvgQ:	40	40		40		45	45		45		13	13		7		3	3		0	

Note: Queue reported is the number of cars per lane.

Traffix 7.9.0415 (c) 2007 Dowling Assoc. Licensed to MMA, LONG BEACH, CA

Overlook Parkway Extension
Future Alt A
PM Peak Hour

Level Of Service Computation Report
2000 HCM Operations Method (Future Volume Alternative)

Intersection #8 Washington St/Victoria Ave

Cycle (sec):	100	Critical Vol./Cap.(X):	0.937
Loss Time (sec):	16 (Y+R=4.0 sec)	Average Delay (sec/veh):	56.3
Optimal Cycle:	130	Level Of Service:	E

Street Name:	Washington St								Victoria Ave								
Approach:	North Bound				South Bound				East Bound				West Bound				
Movement:	L	-	T	-	R	L	-	T	-	R	L	-	T	-	R	L	-	T	-	R
Control:	Split Phase					Split Phase					Split Phase					Split Phase				
Rights:	Include					Include					Ovl					Ovl				
Min. Green:	7	7	7			7	7	7			7	7	7			7	7	7		
Lanes:	0	1	0	1	0	0	1	0	1	0	0	1	0	0	1	0	1	0	0	1
Volume Module:																				
Base Vol:	28	517		374		7	508		1		3	129		107		504	47		40	
Growth Adj:	1.00	1.00		1.00		1.00	1.00		1.00		1.00	1.00		1.00		1.00	1.00		1.00	
Initial Bse:	28	517		374		7	508		1		3	129		107		504	47		40	
Added Vol:	0	0		0		0	0		0		0	0		0		0	0		0	
PasserByVol:	0	0		0		0	0		0		0	0		0		0	0		0	
Initial Fut:	28	517		374		7	508		1		3	129		107		504	47		40	
User Adj:	1.00	1.00		1.00		1.00	1.00		1.00		1.00	1.00		1.00		1.00	1.00		1.00	
PHF Adj:	1.00	1.00		1.00		1.00	1.00		1.00		1.00	1.00		1.00		1.00	1.00		1.00	
PHF Volume:	28	517		374		7	508		1		3	129		107		504	47		40	
Reduct Vol:	0	0		0		0	0		0		0	0		0		0	0		0	
Reduced Vol:	28	517		374		7	508		1		3	129		107		504	47		40	
PCE Adj:	1.00	1.00		1.00		1.00	1.00		1.00		1.00	1.00		1.00		1.00	1.00		1.00	
MLF Adj:	1.00	1.00		1.00		1.00	1.00		1.00		1.00	1.00		1.00		1.00	1.00		1.00	
FinalVolume:	28	517		374		7	508		1		3	129		107		504	47		40	
Saturation Flow Module:																				
Sat/Lane:	1900	1900		1900		1900	1900		1900		1900	1900		1900		1900	1900		1900	
Adjustment:	0.89	0.89		0.89		0.95	0.95		0.95		1.00	1.00		0.85		0.96	0.96		0.85	
Lanes:	0.06	1.13		0.81		0.02	1.97		0.01		0.02	0.98		1.00		0.91	0.09		1.00	
Final Sat.:	103	1905		1378		49	3550		7		43	1855		1615		1661	155		1615	
Capacity Analysis Module:																				
Vol/Sat:	0.27	0.27		0.27		0.14	0.14		0.14		0.07	0.07		0.07		0.30	0.30		0.02	
Crit Moves:	****					****						****					****			
Green/Cycle:	0.29	0.29		0.29		0.15	0.15		0.15		0.07	0.07		0.36		0.32	0.32		0.48	
Volume/Cap:	0.94	0.94		0.94		0.94	0.94		0.94		0.94	0.94		0.18		0.94	0.94		0.05	
Delay/Veh:	50.5	50.5		50.5		65.7	65.7		65.7		103.0	103		21.8		55.6	55.6		14.1	
User DelAdj:	1.00	1.00		1.00		1.00	1.00		1.00		1.00	1.00		1.00		1.00	1.00		1.00	
AdjDel/Veh:	50.5	50.5		50.5		65.7	65.7		65.7		103.0	103		21.8		55.6	55.6		14.1	
LOS by Move:	D	D		D		E	E		E		F	F		C		E	E		B	
HCM2kAvgQ:	19	19		19		12	12		12		7	7		2		21	21		1	

Note: Queue reported is the number of cars per lane.

Traffix 7.9.0415 (c) 2007 Dowling Assoc. Licensed to MMA, LONG BEACH, CA

Overlook Parkway Extension
Future Alt A
PM Peak Hour

Level Of Service Computation Report
2000 HCM Operations Method (Future Volume Alternative)

Intersection #9 Washington St/Overlook Pkwy

Cycle (sec):	100	Critical Vol./Cap.(X):	0.863
Loss Time (sec):	12 (Y+R=4.0 sec)	Average Delay (sec/veh):	26.0
Optimal Cycle:	95	Level Of Service:	C

Street Name:	Washington St								Overlook Pkwy					
Approach:	North Bound			South Bound			East Bound			West Bound				
Movement:	L	- T	- R	L	- T	- R	L	- T	- R	L	- T	- R		
Control:	Protected			Protected			Protected			Protected				
Rights:	Include			Include			Include			Ovl				
Min. Green:	7	7	7	7	7	7	7	7	7	7	7	7		
Lanes:	0	0 1	1 0	2	0 2	0 0	0	0 0	0 0	1	0 0	0 2		
Volume Module:														
Base Vol:	0	1231	108	1111	1632	0	0	0	0	104	0	1092		
Growth Adj:	1.00	1.00	1.00	1.00	1.00	1.00	1.00	1.00	1.00	1.00	1.00	1.00		
Initial Bse:	0	1231	108	1111	1632	0	0	0	0	104	0	1092		
Added Vol:	0	0	0	0	0	0	0	0	0	0	0	0		
PasserByVol:	0	0	0	0	0	0	0	0	0	0	0	0		
Initial Fut:	0	1231	108	1111	1632	0	0	0	0	104	0	1092		
User Adj:	1.00	1.00	1.00	1.00	1.00	1.00	1.00	1.00	1.00	1.00	1.00	1.00		
PHF Adj:	1.00	1.00	1.00	1.00	1.00	1.00	1.00	1.00	1.00	1.00	1.00	1.00		
PHF Volume:	0	1231	108	1111	1632	0	0	0	0	104	0	1092		
Reduct Vol:	0	0	0	0	0	0	0	0	0	0	0	0		
Reduced Vol:	0	1231	108	1111	1632	0	0	0	0	104	0	1092		
PCE Adj:	1.00	1.00	1.00	1.00	1.00	1.00	1.00	1.00	1.00	1.00	1.00	1.00		
MLF Adj:	1.00	1.00	1.00	1.00	1.00	1.00	1.00	1.00	1.00	1.00	1.00	1.00		
FinalVolume:	0	1231	108	1111	1632	0	0	0	0	104	0	1092		
Saturation Flow Module:														
Sat/Lane:	1900	1900	1900	1900	1900	1900	1900	1900	1900	1900	1900	1900		
Adjustment:	1.00	0.94	0.94	0.92	0.95	1.00	1.00	1.00	1.00	0.95	1.00	0.75		
Lanes:	0.00	1.84	0.16	2.00	2.00	0.00	0.00	0.00	0.00	1.00	0.00	2.00		
Final Sat.:	0	3279	288	3502	3610	0	0	0	0	1805	0	2842		
Capacity Analysis Module:														
Vol/Sat:	0.00	0.38	0.38	0.32	0.45	0.00	0.00	0.00	0.00	0.06	0.00	0.38		
Crit Moves:		****		****								****		
Green/Cycle:	0.00	0.43	0.43	0.37	0.69	0.00	0.00	0.00	0.00	0.07	0.00	0.45		
Volume/Cap:	0.00	0.86	0.86	0.86	0.65	0.00	0.00	0.00	0.00	0.78	0.00	0.86		
Delay/Veh:	0.0	30.8	30.8	35.5	9.1	0.0	0.0	0.0	0.0	70.7	0.0	31.4		
User DelAdj:	1.00	1.00	1.00	1.00	1.00	1.00	1.00	1.00	1.00	1.00	1.00	1.00		
AdjDel/Veh:	0.0	30.8	30.8	35.5	9.1	0.0	0.0	0.0	0.0	70.7	0.0	31.4		
LOS by Move:	A	C	C	D	A	A	A	A	A	E	A	C		
HCM2kAvgQ:	0	22	22	19	15	0	0	0	0	5	0	20		

Note: Queue reported is the number of cars per lane.

Traffix 7.9.0415 (c) 2007 Dowling Assoc. Licensed to MMA, LONG BEACH, CA

Overlook Parkway Extension
Future Alt A
PM Peak Hour

Level Of Service Computation Report
2000 HCM Operations Method (Future Volume Alternative)

Intersection #14 Alessandro Blvd/Overlook Pkwy

Cycle (sec):	100	Critical Vol./Cap.(X):	2.055
Loss Time (sec):	16 (Y+R=4.0 sec)	Average Delay (sec/veh):	358.0
Optimal Cycle:	130	Level Of Service:	F

Street Name:	Alessandro Blvd								Overlook Pkwy					
Approach:	North Bound			South Bound			East Bound			West Bound				
Movement:	L	- T	- R	L	- T	- R	L	- T	- R	L	- T	- R		
Control:	Protected			Protected			Protected			Protected				
Rights:	Include			Include			Include			Include				
Min. Green:	7	7	7	7	7	7	7	7	7	7	7	7		
Lanes:	1	0 3	0 1	1	0 2	1 0	1	0 1	1 0	2	0 1	1 0		
Volume Module:														
Base Vol:	667	1585	668	13	2859	256	46	83	905	589	239	4		
Growth Adj:	1.00	1.00	1.00	1.00	1.00	1.00	1.00	1.00	1.00	1.00	1.00	1.00		
Initial Bse:	667	1585	668	13	2859	256	46	83	905	589	239	4		
Added Vol:	0	0	0	0	0	0	0	0	0	0	0	0		
PasserByVol:	0	0	0	0	0	0	0	0	0	0	0	0		
Initial Fut:	667	1585	668	13	2859	256	46	83	905	589	239	4		
User Adj:	1.00	1.00	1.00	1.00	1.00	1.00	1.00	1.00	1.00	1.00	1.00	1.00		
PHF Adj:	1.00	1.00	1.00	1.00	1.00	1.00	1.00	1.00	1.00	1.00	1.00	1.00		
PHF Volume:	667	1585	668	13	2859	256	46	83	905	589	239	4		
Reduct Vol:	0	0	0	0	0	0	0	0	0	0	0	0		
Reduced Vol:	667	1585	668	13	2859	256	46	83	905	589	239	4		
PCE Adj:	1.00	1.00	1.00	1.00	1.00	1.00	1.00	1.00	1.00	1.00	1.00	1.00		
MLF Adj:	1.00	1.00	1.00	1.00	1.00	1.00	1.00	1.00	1.00	1.00	1.00	1.00		
FinalVolume:	667	1585	668	13	2859	256	46	83	905	589	239	4		
Saturation Flow Module:														
Sat/Lane:	1900	1900	1900	1900	1900	1900	1900	1900	1900	1900	1900	1900		
Adjustment:	0.95	0.91	0.85	0.95	0.90	0.90	0.95	0.82	0.82	0.92	0.95	0.95		
Lanes:	1.00	3.00	1.00	1.00	2.75	0.25	1.00	1.00	1.00	2.00	1.97	0.03		
Final Sat.:	1805	5187	1615	1805	4704	421	1805	1558	1558	3502	3543	59		
Capacity Analysis Module:														
Vol/Sat:	0.37	0.31	0.41	0.01	0.61	0.61	0.03	0.05	0.58	0.17	0.07	0.07		
Crit Moves:	****				****				****	****				
Green/Cycle:	0.18	0.41	0.41	0.07	0.30	0.30	0.18	0.28	0.28	0.08	0.18	0.18		
Volume/Cap:	2.06	0.75	1.02	0.10	2.06	2.06	0.14	0.19	2.06	2.06	0.37	0.37		
Delay/Veh:	526.5	27.0	70.0	43.9	512	512.5	34.5	27.2	518.0	532.8	36.2	36.2		
User DelAdj:	1.00	1.00	1.00	1.00	1.00	1.00	1.00	1.00	1.00	1.00	1.00	1.00		
AdjDel/Veh:	526.5	27.0	70.0	43.9	512	512.5	34.5	27.2	518.0	532.8	36.2	36.2		
LOS by Move:	F	C	E	D	F	F	C	C	F	F	D	D		
HCM2kAvgQ:	63	17	29	0	107	107	1	2	89	30	4	4		

Note: Queue reported is the number of cars per lane.

Traffix 7.9.0415 (c) 2007 Dowling Assoc. Licensed to MMA, LONG BEACH, CA

Overlook Parkway Extension
Future Alt A
PM Peak Hour

Level Of Service Computation Report
2000 HCM Operations Method (Future Volume Alternative)

Intersection #16 Crystal View Ter/Overlook Pkwy

Cycle (sec):	100	Critical Vol./Cap.(X):	0.441
Loss Time (sec):	8 (Y+R=4.0 sec)	Average Delay (sec/veh):	3.2
Optimal Cycle:	29	Level Of Service:	A

Street Name:	Crystal View Ter						Overlook Pkwy					
Approach:	North Bound			South Bound			East Bound			West Bound		
Movement:	L -	T -	R	L -	T -	R	L -	T -	R	L -	T -	R
Control:	Permitted			Permitted			Permitted			Permitted		
Rights:	Include			Include			Include			Include		
Min. Green:	7	7	7	7	7	7	7	7	7	7	7	7
Lanes:	0 0	1! 0	0	0 0	1	0	1 0	1	1 0	1 0	1	1 0
Volume Module:												
Base Vol:	42	0	13	0	2	0	1	1020	261	17	1163	0
Growth Adj:	1.00	1.00	1.00	1.00	1.00	1.00	1.00	1.00	1.00	1.00	1.00	1.00
Initial Bse:	42	0	13	0	2	0	1	1020	261	17	1163	0
Added Vol:	0	0	0	0	0	0	0	0	0	0	0	0
PasserByVol:	0	0	0	0	0	0	0	0	0	0	0	0
Initial Fut:	42	0	13	0	2	0	1	1020	261	17	1163	0
User Adj:	1.00	1.00	1.00	1.00	1.00	1.00	1.00	1.00	1.00	1.00	1.00	1.00
PHF Adj:	1.00	1.00	1.00	1.00	1.00	1.00	1.00	1.00	1.00	1.00	1.00	1.00
PHF Volume:	42	0	13	0	2	0	1	1020	261	17	1163	0
Reduct Vol:	0	0	0	0	0	0	0	0	0	0	0	0
Reduced Vol:	42	0	13	0	2	0	1	1020	261	17	1163	0
PCE Adj:	1.00	1.00	1.00	1.00	1.00	1.00	1.00	1.00	1.00	1.00	1.00	1.00
MLF Adj:	1.00	1.00	1.00	1.00	1.00	1.00	1.00	1.00	1.00	1.00	1.00	1.00
FinalVolume:	42	0	13	0	2	0	1	1020	261	17	1163	0
Saturation Flow Module:												
Sat/Lane:	1900	1900	1900	1900	1900	1900	1900	1900	1900	1900	1900	1900
Adjustment:	0.74	1.00	0.74	1.00	1.00	1.00	0.23	0.92	0.92	0.20	0.95	0.95
Lanes:	0.76	0.00	0.24	0.00	1.00	0.00	1.00	1.59	0.41	1.00	2.00	0.00
Final Sat.:	1074	0	333	0	1900	0	437	2785	713	382	3610	0
Capacity Analysis Module:												
Vol/Sat:	0.04	0.00	0.04	0.00	0.00	0.00	0.00	0.37	0.37	0.04	0.32	0.00
Crit Moves:	****							****				
Green/Cycle:	0.09	0.00	0.09	0.00	0.09	0.00	0.83	0.83	0.83	0.83	0.83	0.00
Volume/Cap:	0.44	0.00	0.44	0.00	0.01	0.00	0.00	0.44	0.44	0.05	0.39	0.00
Delay/Veh:	45.7	0.0	45.7	0.0	41.6	0.0	1.4	2.4	2.4	1.6	2.2	0.0
User DelAdj:	1.00	1.00	1.00	1.00	1.00	1.00	1.00	1.00	1.00	1.00	1.00	1.00
AdjDel/Veh:	45.7	0.0	45.7	0.0	41.6	0.0	1.4	2.4	2.4	1.6	2.2	0.0
LOS by Move:	D	A	D	A	D	A	A	A	A	A	A	A
HCM2kAvgQ:	2	0	2	0	0	0	0	6	6	0	5	0

Note: Queue reported is the number of cars per lane.

Traffix 7.9.0415 (c) 2007 Dowling Assoc. Licensed to MMA, LONG BEACH, CA

Overlook Parkway Extension
Future Alt A
PM Peak Hour

Level Of Service Computation Report
2000 HCM Operations Method (Future Volume Alternative)

Intersection #17 Kingdom Dr/Overlook Pkwy

Cycle (sec):	100	Critical Vol./Cap.(X):	0.682
Loss Time (sec):	8 (Y+R=4.0 sec)	Average Delay (sec/veh):	8.2
Optimal Cycle:	46	Level Of Service:	A

Street Name:	Kingdom Dr						Overlook Pkwy					
Approach:	North Bound			South Bound			East Bound			West Bound		
Movement:	L -	T -	R	L -	T -	R	L -	T -	R	L -	T -	R
Control:	Permitted			Permitted			Permitted			Permitted		
Rights:	Include			Include			Include			Include		
Min. Green:	7	7	7	7	7	7	7	7	7	7	7	7
Lanes:	0 0	1! 0	0	1 0	0	0	1 0	1	1 0	1 0	1	1 0
Volume Module:												
Base Vol:	69	0	107	4	0	0	0	1194	133	169	1001	5
Growth Adj:	1.00	1.00	1.00	1.00	1.00	1.00	1.00	1.00	1.00	1.00	1.00	1.00
Initial Bse:	69	0	107	4	0	0	0	1194	133	169	1001	5
Added Vol:	0	0	0	0	0	0	0	0	0	0	0	0
PasserByVol:	0	0	0	0	0	0	0	0	0	0	0	0
Initial Fut:	69	0	107	4	0	0	0	1194	133	169	1001	5
User Adj:	1.00	1.00	1.00	1.00	1.00	1.00	1.00	1.00	1.00	1.00	1.00	1.00
PHF Adj:	1.00	1.00	1.00	1.00	1.00	1.00	1.00	1.00	1.00	1.00	1.00	1.00
PHF Volume:	69	0	107	4	0	0	0	1194	133	169	1001	5
Reduct Vol:	0	0	0	0	0	0	0	0	0	0	0	0
Reduced Vol:	69	0	107	4	0	0	0	1194	133	169	1001	5
PCE Adj:	1.00	1.00	1.00	1.00	1.00	1.00	1.00	1.00	1.00	1.00	1.00	1.00
MLF Adj:	1.00	1.00	1.00	1.00	1.00	1.00	1.00	1.00	1.00	1.00	1.00	1.00
FinalVolume:	69	0	107	4	0	0	0	1194	133	169	1001	5
Saturation Flow Module:												
Sat/Lane:	1900	1900	1900	1900	1900	1900	1900	1900	1900	1900	1900	1900
Adjustment:	0.80	1.00	0.80	0.85	1.00	1.00	1.00	0.94	0.94	0.17	0.95	0.95
Lanes:	0.39	0.00	0.61	1.00	0.00	0.00	1.00	1.80	0.20	1.00	1.99	0.01
Final Sat.:	595	0	923	1606	0	0	1900	3199	356	331	3588	18
Capacity Analysis Module:												
Vol/Sat:	0.12	0.00	0.12	0.00	0.00	0.00	0.00	0.37	0.37	0.51	0.28	0.28
Crit Moves:	****									****		
Green/Cycle:	0.17	0.00	0.17	0.17	0.00	0.00	0.00	0.75	0.75	0.75	0.75	0.75
Volume/Cap:	0.68	0.00	0.68	0.01	0.00	0.00	0.00	0.50	0.50	0.68	0.37	0.37
Delay/Veh:	46.2	0.0	46.2	34.5	0.0	0.0	0.0	5.1	5.1	13.9	4.4	4.4
User DelAdj:	1.00	1.00	1.00	1.00	1.00	1.00	1.00	1.00	1.00	1.00	1.00	1.00
AdjDel/Veh:	46.2	0.0	46.2	34.5	0.0	0.0	0.0	5.1	5.1	13.9	4.4	4.4
LOS by Move:	D	A	D	C	A	A	A	A	A	B	A	A
HCM2kAvgQ:	6	0	6	0	0	0	0	9	9	4	6	6

Note: Queue reported is the number of cars per lane.

Traffix 7.9.0415 (c) 2007 Dowling Assoc. Licensed to MMA, LONG BEACH, CA

Overlook Parkway Extension
Future Alt A
PM Peak Hour

Level Of Service Computation Report
2000 HCM Operations Method (Future Volume Alternative)

Intersection #19 Trautwein Rd/John F. Kennedy Dr

Cycle (sec):	100	Critical Vol./Cap.(X):	0.889
Loss Time (sec):	16 (Y+R=4.0 sec)	Average Delay (sec/veh):	32.2
Optimal Cycle:	112	Level Of Service:	C

Street Name:	Trautwein Rd								John F. Kennedy Dr					
Approach:	North Bound			South Bound			East Bound			West Bound				
Movement:	L	T	R	L	T	R	L	T	R	L	T	R		
Control:	Protected			Protected			Protected			Protected				
Rights:	Include			Ovl			Include			Include				
Min. Green:	7	7	7	7	7	7	7	7	7	7	7	7		
Lanes:	1 0	2 0	1	1 0	2 0	1	2 0	1 0	1	1 0	1 0	1		
Volume Module:														
Base Vol:	72	1431	91	61	1998	535	452	54	121	64	46	35		
Growth Adj:	1.00	1.00	1.00	1.00	1.00	1.00	1.00	1.00	1.00	1.00	1.00	1.00		
Initial Bse:	72	1431	91	61	1998	535	452	54	121	64	46	35		
Added Vol:	0	0	0	0	0	0	0	0	0	0	0	0		
PasserByVol:	0	0	0	0	0	0	0	0	0	0	0	0		
Initial Fut:	72	1431	91	61	1998	535	452	54	121	64	46	35		
User Adj:	1.00	1.00	1.00	1.00	1.00	1.00	1.00	1.00	1.00	1.00	1.00	1.00		
PHF Adj:	1.00	1.00	1.00	1.00	1.00	1.00	1.00	1.00	1.00	1.00	1.00	1.00		
PHF Volume:	72	1431	91	61	1998	535	452	54	121	64	46	35		
Reduct Vol:	0	0	0	0	0	0	0	0	0	0	0	0		
Reduced Vol:	72	1431	91	61	1998	535	452	54	121	64	46	35		
PCE Adj:	1.00	1.00	1.00	1.00	1.00	1.00	1.00	1.00	1.00	1.00	1.00	1.00		
MLF Adj:	1.00	1.00	1.00	1.00	1.00	1.00	1.00	1.00	1.00	1.00	1.00	1.00		
FinalVolume:	72	1431	91	61	1998	535	452	54	121	64	46	35		
Saturation Flow Module:														
Sat/Lane:	1900	1900	1900	1900	1900	1900	1900	1900	1900	1900	1900	1900		
Adjustment:	0.95	0.95	0.85	0.95	0.95	0.85	0.92	1.00	0.85	0.95	1.00	0.85		
Lanes:	1.00	2.00	1.00	1.00	2.00	1.00	2.00	1.00	1.00	1.00	1.00	1.00		
Final Sat.:	1805	3610	1615	1805	3610	1615	3502	1900	1615	1805	1900	1615		
Capacity Analysis Module:														
Vol/Sat:	0.04	0.40	0.06	0.03	0.55	0.33	0.13	0.03	0.07	0.04	0.02	0.02		
Crit Moves:	****				****		****				****			
Green/Cycle:	0.07	0.54	0.54	0.10	0.57	0.70	0.13	0.10	0.10	0.10	0.07	0.07		
Volume/Cap:	0.57	0.73	0.10	0.35	0.98	0.47	0.98	0.27	0.72	0.36	0.35	0.31		
Delay/Veh:	51.1	18.8	11.2	43.6	35.4	7.0	78.4	42.0	57.0	43.5	45.9	45.8		
User DelAdj:	1.00	1.00	1.00	1.00	1.00	1.00	1.00	1.00	1.00	1.00	1.00	1.00		
AdjDel/Veh:	51.1	18.8	11.2	43.6	35.4	7.0	78.4	42.0	57.0	43.5	45.9	45.8		
LOS by Move:	D	B	B	D	D	A	E	D	E	D	D	D		
HCM2kAvgQ:	3	18	1	2	38	8	11	2	5	2	2	1		

Note: Queue reported is the number of cars per lane.

Traffix 7.9.0415 (c) 2007 Dowling Assoc. Licensed to MMA, LONG BEACH, CA

Overlook Parkway Extension
Future Alt A
PM Peak Hour

Level Of Service Computation Report
2000 HCM Operations Method (Future Volume Alternative)

Intersection #24 Hawarden Dr/Overlook Pkwy

Cycle (sec):	100	Critical Vol./Cap.(X):	0.563
Loss Time (sec):	8 (Y+R=4.0 sec)	Average Delay (sec/veh):	16.9
Optimal Cycle:	36	Level Of Service:	B

Street Name:	Hawarden Dr								Overlook Pkwy					
Approach:	North Bound			South Bound			East Bound			West Bound				
Movement:	L	T	R	L	T	R	L	T	R	L	T	R		
Control:	Permitted			Permitted			Permitted			Permitted				
Rights:	Include			Include			Include			Include				
Min. Green:	7	7	7	7	7	7	7	7	7	7	7	7		
Lanes:	0 0	1! 0	0	0 0	1! 0	0	1 0	1 1	0	1 0	1 1	0		
Volume Module:														
Base Vol:	45	6	5	105	40	186	39	1039	49	2	1022	28		
Growth Adj:	1.00	1.00	1.00	1.00	1.00	1.00	1.00	1.00	1.00	1.00	1.00	1.00		
Initial Bse:	45	6	5	105	40	186	39	1039	49	2	1022	28		
Added Vol:	0	0	0	0	0	0	0	0	0	0	0	0		
PasserByVol:	0	0	0	0	0	0	0	0	0	0	0	0		
Initial Fut:	45	6	5	105	40	186	39	1039	49	2	1022	28		
User Adj:	1.00	1.00	1.00	1.00	1.00	1.00	1.00	1.00	1.00	1.00	1.00	1.00		
PHF Adj:	1.00	1.00	1.00	1.00	1.00	1.00	1.00	1.00	1.00	1.00	1.00	1.00		
PHF Volume:	45	6	5	105	40	186	39	1039	49	2	1022	28		
Reduct Vol:	0	0	0	0	0	0	0	0	0	0	0	0		
Reduced Vol:	45	6	5	105	40	186	39	1039	49	2	1022	28		
PCE Adj:	1.00	1.00	1.00	1.00	1.00	1.00	1.00	1.00	1.00	1.00	1.00	1.00		
MLF Adj:	1.00	1.00	1.00	1.00	1.00	1.00	1.00	1.00	1.00	1.00	1.00	1.00		
FinalVolume:	45	6	5	105	40	186	39	1039	49	2	1022	28		
Saturation Flow Module:														
Sat/Lane:	1900	1900	1900	1900	1900	1900	1900	1900	1900	1900	1900	1900		
Adjustment:	0.69	0.69	0.69	0.81	0.81	0.81	0.19	0.94	0.94	0.18	0.95	0.95		
Lanes:	0.80	0.11	0.09	0.32	0.12	0.56	1.00	1.91	0.09	1.00	1.95	0.05		
Final Sat.:	1059	141	118	489	186	866	359	3423	161	336	3500	96		
Capacity Analysis Module:														
Vol/Sat:	0.04	0.04	0.04	0.21	0.21	0.21	0.11	0.30	0.30	0.01	0.29	0.29		
Crit Moves:					****			****						
Green/Cycle:	0.38	0.38	0.38	0.38	0.38	0.38	0.54	0.54	0.54	0.54	0.54	0.54		
Volume/Cap:	0.11	0.11	0.11	0.56	0.56	0.56	0.20	0.56	0.56	0.01	0.54	0.54		
Delay/Veh:	20.1	20.1	20.1	25.6	25.6	25.6	12.4	15.7	15.7	10.7	15.3	15.3		
User DelAdj:	1.00	1.00	1.00	1.00	1.00	1.00	1.00	1.00	1.00	1.00	1.00	1.00		
AdjDel/Veh:	20.1	20.1	20.1	25.6	25.6	25.6	12.4	15.7	15.7	10.7	15.3	15.3		
LOS by Move:	C	C	C	C	C	C	B	B	B	B	B	B		
HCM2kAvgQ:	1	1	1	8	8	8	1	12	12	0	11	11		

Note: Queue reported is the number of cars per lane.

Traffix 7.9.0415 (c) 2007 Dowling Assoc. Licensed to MMA, LONG BEACH, CA

```
Future Alt A PM            Fri Apr 6, 2012 13:13:50                 Page 15-1
-------------------------------------------------------------------------------
                           Overlook Parkway Extension
                                  Future Alt A
                                  PM Peak Hour
-------------------------------------------------------------------------------
                        Level Of Service Computation Report
             2000 HCM Operations Method (Future Volume Alternative)
*******************************************************************************
Intersection #28 Orozco Dr/Overlook Pkwy
*******************************************************************************
Cycle (sec):         100                 Critical Vol./Cap.(X):         0.530
Loss Time (sec):       8 (Y+R=4.0 sec)  Average Delay (sec/veh):        14.2
Optimal Cycle:        34                 Level Of Service:                 B
*******************************************************************************
Street Name:            Orozco Dr                       Overlook Pkwy
Approach:      North Bound      South Bound       East Bound       West Bound
Movement:     L  -  T  -  R    L  -  T  -  R    L  -  T  -  R    L  -  T  -  R
------------|---------------||---------------||---------------||---------------|
Control:         Permitted        Permitted        Permitted        Permitted
Rights:           Include          Include          Include          Include
Min. Green:     7    7    7     7    7    7     7    7    7     7    7    7
Lanes:        0  0  1! 0  0    0  0  1! 0  0    1  0  1  1  0    1  0  1  1  0
------------|---------------||---------------||---------------||---------------|
Volume Module:
Base Vol:      10    1    2   209    8   27    29 1108   10     0 1058   45
Growth Adj:  1.00 1.00 1.00  1.00 1.00 1.00  1.00 1.00 1.00  1.00 1.00 1.00
Initial Bse:   10    1    2   209    8   27    29 1108   10     0 1058   45
Added Vol:      0    0    0     0    0    0     0    0    0     0    0    0
PasserByVol:    0    0    0     0    0    0     0    0    0     0    0    0
Initial Fut:   10    1    2   209    8   27    29 1108   10     0 1058   45
User Adj:    1.00 1.00 1.00  1.00 1.00 1.00  1.00 1.00 1.00  1.00 1.00 1.00
PHF Adj:     1.00 1.00 1.00  1.00 1.00 1.00  1.00 1.00 1.00  1.00 1.00 1.00
PHF Volume:    10    1    2   209    8   27    29 1108   10     0 1058   45
Reduct Vol:     0    0    0     0    0    0     0    0    0     0    0    0
Reduced Vol:   10    1    2   209    8   27    29 1108   10     0 1058   45
PCE Adj:     1.00 1.00 1.00  1.00 1.00 1.00  1.00 1.00 1.00  1.00 1.00 1.00
MLF Adj:     1.00 1.00 1.00  1.00 1.00 1.00  1.00 1.00 1.00  1.00 1.00 1.00
FinalVolume:   10    1    2   209    8   27    29 1108   10     0 1058   45
------------|---------------||---------------||---------------||---------------|
Saturation Flow Module:
Sat/Lane:    1900 1900 1900  1900 1900 1900  1900 1900 1900  1900 1900 1900
Adjustment:  0.82 0.82 0.82  0.72 0.72 0.72  0.19 0.95 0.95  1.00 0.94 0.94
Lanes:       0.77 0.08 0.15  0.86 0.03 0.11  1.00 1.98 0.02  1.00 1.92 0.08
Final Sat.:  1195  119  239  1180   45  152   359 3574   32  1900 3442  146
------------|---------------||---------------||---------------||---------------|
Capacity Analysis Module:
Vol/Sat:     0.01 0.01 0.01  0.18 0.18 0.18  0.08 0.31 0.31  0.00 0.31 0.31
Crit Moves:                          ****             ****
Green/Cycle: 0.33 0.33 0.33  0.33 0.33 0.33  0.59 0.59 0.59  0.00 0.59 0.59
Volume/Cap:  0.03 0.03 0.03  0.53 0.53 0.53  0.14 0.53 0.53  0.00 0.53 0.53
Delay/Veh:   22.3 22.3 22.3  28.1 28.1 28.1   9.6 12.7 12.7   0.0 12.7 12.7
User DelAdj: 1.00 1.00 1.00  1.00 1.00 1.00  1.00 1.00 1.00  1.00 1.00 1.00
AdjDel/Veh:  22.3 22.3 22.3  28.1 28.1 28.1   9.6 12.7 12.7   0.0 12.7 12.7
LOS by Move:   C    C    C     C    C    C     A    B    B     A    B    B
HCM2kAvgQ:     0    0    0     7    7    7     1   11   11     0   11   11
*******************************************************************************
Note: Queue reported is the number of cars per lane.

  Traffix 7.9.0415 (c) 2007 Dowling Assoc. Licensed to MMA, LONG BEACH, CA
```


APPENDIX C:
TRAFFIX WORKSHEETS
2035 CONDITIONS – GATES OPEN

MITIGATION SCENARIO 1 (2035 GATES OPEN)

Overlook Parkway Extension
Future Alt 1 (Gates Closed - No Overlook)
AM Peak Hour

Level Of Service Computation Report
2000 HCM 4-Way Stop Method (Future Volume Alternative)

Intersection #7 Washington St/Lincoln Ave

Cycle (sec):	100	Critical Vol./Cap.(X):	1.918
Loss Time (sec):	0 (Y+R=4.0 sec)	Average Delay (sec/veh):	205.2
Optimal Cycle:	0	Level Of Service:	F

Street Name:	Washington St					Lincoln Ave					
Approach:	North Bound			South Bound			East Bound			West Bound		
Movement:	L - T - R			L - T - R			L - T - R			L - T - R		
Control:	Stop Sign			Stop Sign			Stop Sign			Stop Sign		
Rights:	Include			Include			Include			Include		
Min. Green:	7	7	7	7	7	7	7	7	7	7	7	7
Lanes:	1 0	0 1	0	1 0	0 1	0	0 1	0 0	1	0 1	0 0	1
Volume Module:												
Base Vol:	26	758	68	71	271	33	11	359	9	63	270	48
Growth Adj:	1.00	1.00	1.00	1.00	1.00	1.00	1.00	1.00	1.00	1.00	1.00	1.00
Initial Bse:	26	758	68	71	271	33	11	359	9	63	270	48
Added Vol:	0	0	0	0	0	0	0	0	0	0	0	0
PasserByVol:	0	0	0	0	0	0	0	0	0	0	0	0
Initial Fut:	26	758	68	71	271	33	11	359	9	63	270	48
User Adj:	1.00	1.00	1.00	1.00	1.00	1.00	1.00	1.00	1.00	1.00	1.00	1.00
PHF Adj:	1.00	1.00	1.00	1.00	1.00	1.00	1.00	1.00	1.00	1.00	1.00	1.00
PHF Volume:	26	758	68	71	271	33	11	359	9	63	270	48
Reduct Vol:	0	0	0	0	0	0	0	0	0	0	0	0
Reduced Vol:	26	758	68	71	271	33	11	359	9	63	270	48
PCE Adj:	1.00	1.00	1.00	1.00	1.00	1.00	1.00	1.00	1.00	1.00	1.00	1.00
MLF Adj:	1.00	1.00	1.00	1.00	1.00	1.00	1.00	1.00	1.00	1.00	1.00	1.00
FinalVolume:	26	758	68	71	271	33	11	359	9	63	270	48
Saturation Flow Module:												
Adjustment:	1.00	1.00	1.00	1.00	1.00	1.00	1.00	1.00	1.00	1.00	1.00	1.00
Lanes:	1.00	0.92	0.08	1.00	0.89	0.11	0.03	0.97	1.00	0.19	0.81	1.00
Final Sat.:	400	395	35	381	363	44	12	402	450	77	328	443
Capacity Analysis Module:												
Vol/Sat:	0.06	1.92	1.92	0.19	0.75	0.75	0.89	0.89	0.02	0.82	0.82	0.11
Crit Moves:		****			****			****			****	
Delay/Veh:	12.2	441	441.0	14.0	31.8	31.8	49.9	49.9	10.8	40.1	40.1	11.7
Delay Adj:	1.00	1.00	1.00	1.00	1.00	1.00	1.00	1.00	1.00	1.00	1.00	1.00
AdjDel/Veh:	12.2	441	441.0	14.0	31.8	31.8	49.9	49.9	10.8	40.1	40.1	11.7
LOS by Move:	B	F	F	B	D	D	E	E	B	E	E	B
ApproachDel:	427.9			28.4			48.9			36.5		
Delay Adj:	1.00			1.00			1.00			1.00		
ApprAdjDel:	427.9			28.4			48.9			36.5		
LOS by Appr:	F			D			E			E		
AllWayAvgQ:	0.1	51.4	51.4	0.2	2.3	2.3	4.4	4.4	0.0	3.2	3.2	0.1

Traffix 7.9.0415 (c) 2007 Dowling Assoc. Licensed to MMA, LONG BEACH, CA

Overlook Parkway Extension
Future Alt 1 (Gates Closed - No Overlook)
AM Peak Hour

Level Of Service Computation Report
2000 HCM Operations Method (Future Volume Alternative)

Intersection #8 Washington St/Victoria Ave

Cycle (sec):	100	Critical Vol./Cap.(X):	1.256
Loss Time (sec):	16 (Y+R=4.0 sec)	Average Delay (sec/veh):	148.0
Optimal Cycle:	130	Level Of Service:	F

Street Name:	Washington St					Victoria Ave					
Approach:	North Bound			South Bound			East Bound			West Bound		
Movement:	L - T - R			L - T - R			L - T - R			L - T - R		
Control:	Split Phase			Split Phase			Split Phase			Split Phase		
Rights:	Include			Include			Ovl			Ovl		
Min. Green:	7	7	7	7	7	7	7	7	7	7	7	7
Lanes:	0 1	0 1	0	0 1	0 1	0	0 1	0 0	1	0 1	0 0	1
Volume Module:												
Base Vol:	399	886	786	8	326	5	5	176	230	269	195	11
Growth Adj:	1.00	1.00	1.00	1.00	1.00	1.00	1.00	1.00	1.00	1.00	1.00	1.00
Initial Bse:	399	886	786	8	326	5	5	176	230	269	195	11
Added Vol:	0	0	0	0	0	0	0	0	0	0	0	0
PasserByVol:	0	0	0	0	0	0	0	0	0	0	0	0
Initial Fut:	399	886	786	8	326	5	5	176	230	269	195	11
User Adj:	1.00	1.00	1.00	1.00	1.00	1.00	1.00	1.00	1.00	1.00	1.00	1.00
PHF Adj:	1.00	1.00	1.00	1.00	1.00	1.00	1.00	1.00	1.00	1.00	1.00	1.00
PHF Volume:	399	886	786	8	326	5	5	176	230	269	195	11
Reduct Vol:	0	0	0	0	0	0	0	0	0	0	0	0
Reduced Vol:	399	886	786	8	326	5	5	176	230	269	195	11
PCE Adj:	1.00	1.00	1.00	1.00	1.00	1.00	1.00	1.00	1.00	1.00	1.00	1.00
MLF Adj:	1.00	1.00	1.00	1.00	1.00	1.00	1.00	1.00	1.00	1.00	1.00	1.00
FinalVolume:	399	886	786	8	326	5	5	176	230	269	195	11
Saturation Flow Module:												
Sat/Lane:	1900	1900	1900	1900	1900	1900	1900	1900	1900	1900	1900	1900
Adjustment:	0.89	0.89	0.89	0.95	0.95	0.95	1.00	1.00	0.85	0.97	0.97	0.85
Lanes:	0.38	0.86	0.76	0.05	1.92	0.03	0.03	0.97	1.00	0.58	0.42	1.00
Final Sat.:	649	1442	1279	85	3461	53	52	1846	1615	1071	776	1615
Capacity Analysis Module:												
Vol/Sat:	0.61	0.61	0.61	0.09	0.09	0.09	0.10	0.10	0.14	0.25	0.25	0.01
Crit Moves:		****			****		****				****	
Green/Cycle:	0.49	0.49	0.49	0.07	0.07	0.07	0.08	0.08	0.57	0.20	0.20	0.27
Volume/Cap:	1.26	1.26	1.26	1.26	1.26	1.26	1.26	1.26	0.25	1.26	1.26	0.02
Delay/Veh:	146.0	146	146.0	188.2	188	188.2	205.8	206	11.2	175.7	176	26.5
User DelAdj:	1.00	1.00	1.00	1.00	1.00	1.00	1.00	1.00	1.00	1.00	1.00	1.00
AdjDel/Veh:	146.0	146	146.0	188.2	188	188.2	205.8	206	11.2	175.7	176	26.5
LOS by Move:	F	F	F	F	F	F	F	F	B	F	F	C
HCM2kAvgQ:	62	62	62	12	12	12	13	13	4	28	28	0

Note: Queue reported is the number of cars per lane.

Traffix 7.9.0415 (c) 2007 Dowling Assoc. Licensed to MMA, LONG BEACH, CA

Overlook Parkway Extension
Future Alt 1 (Gates Closed - No Overlook)
AM Peak Hour

Level Of Service Computation Report
2000 HCM Operations Method (Future Volume Alternative)

Intersection #20 Washington St/Bradley St

Cycle (sec): 100 | Critical Vol./Cap.(X): 0.892
Loss Time (sec): 12 (Y+R=4.0 sec) | Average Delay (sec/veh): 31.8
Optimal Cycle: 106 | Level Of Service: C

Street Name:	Washington St						Bradley St					
Approach:	North Bound			South Bound			East Bound			West Bound		
Movement:	L -	T -	R	L -	T -	R	L -	T -	R	L -	T -	R
Control:	Protected			Protected			Permitted			Permitted		
Rights:	Include			Include			Include			Include		
Min. Green:	7	7	7	7	7	7	7	7	7	7	7	7
Lanes:	1 0	1 1	0	1 0	1 1	0	0 1	0 0	1	0 0	1! 0	0
Volume Module:												
Base Vol:	408	1954	21	67	663	6	8	19	200	47	64	218
Growth Adj:	1.00	1.00	1.00	1.00	1.00	1.00	1.00	1.00	1.00	1.00	1.00	1.00
Initial Bse:	408	1954	21	67	663	6	8	19	200	47	64	218
Added Vol:	0	0	0	0	0	0	0	0	0	0	0	0
PasserByVol:	0	0	0	0	0	0	0	0	0	0	0	0
Initial Fut:	408	1954	21	67	663	6	8	19	200	47	64	218
User Adj:	1.00	1.00	1.00	1.00	1.00	1.00	1.00	1.00	1.00	1.00	1.00	1.00
PHF Adj:	1.00	1.00	1.00	1.00	1.00	1.00	1.00	1.00	1.00	1.00	1.00	1.00
PHF Volume:	408	1954	21	67	663	6	8	19	200	47	64	218
Reduct Vol:	0	0	0	0	0	0	0	0	0	0	0	0
Reduced Vol:	408	1954	21	67	663	6	8	19	200	47	64	218
PCE Adj:	1.00	1.00	1.00	1.00	1.00	1.00	1.00	1.00	1.00	1.00	1.00	1.00
MLF Adj:	1.00	1.00	1.00	1.00	1.00	1.00	1.00	1.00	1.00	1.00	1.00	1.00
FinalVolume:	408	1954	21	67	663	6	8	19	200	47	64	218
Saturation Flow Module:												
Sat/Lane:	1900	1900	1900	1900	1900	1900	1900	1900	1900	1900	1900	1900
Adjustment:	0.95	0.95	0.95	0.95	0.95	0.95	0.90	0.90	0.85	0.87	0.87	0.87
Lanes:	1.00	1.98	0.02	1.00	1.98	0.02	0.30	0.70	1.00	0.14	0.19	0.67
Final Sat.:	1805	3564	38	1805	3574	32	504	1198	1615	235	320	1091
Capacity Analysis Module:												
Vol/Sat:	0.23	0.55	0.55	0.04	0.19	0.19	0.02	0.02	0.12	0.20	0.20	0.20
Crit Moves:		****		****							****	
Green/Cycle:	0.36	0.59	0.59	0.07	0.30	0.30	0.22	0.22	0.22	0.22	0.22	0.22
Volume/Cap:	0.62	0.92	0.92	0.53	0.62	0.62	0.07	0.07	0.57	0.92	0.92	0.92
Delay/Veh:	27.9	25.6	25.6	49.1	31.3	31.3	31.3	31.3	37.3	67.4	67.4	67.4
User DelAdj:	1.00	1.00	1.00	1.00	1.00	1.00	1.00	1.00	1.00	1.00	1.00	1.00
AdjDel/Veh:	27.9	25.6	25.6	49.1	31.3	31.3	31.3	31.3	37.3	67.4	67.4	67.4
LOS by Move:	C	C	C	D	C	C	C	C	D	E	E	E
HCM2kAvgQ:	11	33	33	3	10	10	1	1	6	14	14	14

Note: Queue reported is the number of cars per lane.

Traffix 7.9.0415 (c) 2007 Dowling Assoc. Licensed to MMA, LONG BEACH, CA

Overlook Parkway Extension
Future Alt 1 (Gates Closed - No Overlook)
PM Peak Hour

Level Of Service Computation Report
2000 HCM 4-Way Stop Method (Future Volume Alternative)

Intersection #7 Washington St/Lincoln Ave

Cycle (sec): 100 | Critical Vol./Cap.(X): 1.188
Loss Time (sec): 0 (Y+R=4.0 sec) | Average Delay (sec/veh): 91.1
Optimal Cycle: 0 | Level Of Service: F

Street Name:	Washington St						Lincoln Ave					
Approach:	North Bound			South Bound			East Bound			West Bound		
Movement:	L -	T -	R	L -	T -	R	L -	T -	R	L -	T -	R
Control:	Stop Sign			Stop Sign			Stop Sign			Stop Sign		
Rights:	Include			Include			Include			Include		
Min. Green:	7	7	7	7	7	7	7	7	7	7	7	7
Lanes:	1 0	0 1	0	1 0	0 1	0	0 1	0 0	1	0 1	0 0	1
Volume Module:												
Base Vol:	50	410	49	75	451	17	10	378	45	99	253	65
Growth Adj:	1.00	1.00	1.00	1.00	1.00	1.00	1.00	1.00	1.00	1.00	1.00	1.00
Initial Bse:	50	410	49	75	451	17	10	378	45	99	253	65
Added Vol:	0	0	0	0	0	0	0	0	0	0	0	0
PasserByVol:	0	0	0	0	0	0	0	0	0	0	0	0
Initial Fut:	50	410	49	75	451	17	10	378	45	99	253	65
User Adj:	1.00	1.00	1.00	1.00	1.00	1.00	1.00	1.00	1.00	1.00	1.00	1.00
PHF Adj:	1.00	1.00	1.00	1.00	1.00	1.00	1.00	1.00	1.00	1.00	1.00	1.00
PHF Volume:	50	410	49	75	451	17	10	378	45	99	253	65
Reduct Vol:	0	0	0	0	0	0	0	0	0	0	0	0
Reduced Vol:	50	410	49	75	451	17	10	378	45	99	253	65
PCE Adj:	1.00	1.00	1.00	1.00	1.00	1.00	1.00	1.00	1.00	1.00	1.00	1.00
MLF Adj:	1.00	1.00	1.00	1.00	1.00	1.00	1.00	1.00	1.00	1.00	1.00	1.00
FinalVolume:	50	410	49	75	451	17	10	378	45	99	253	65
Saturation Flow Module:												
Adjustment:	1.00	1.00	1.00	1.00	1.00	1.00	1.00	1.00	1.00	1.00	1.00	1.00
Lanes:	1.00	0.89	0.11	1.00	0.96	0.04	0.03	0.97	1.00	0.28	0.72	1.00
Final Sat.:	371	354	42	372	380	14	10	382	424	107	274	419
Capacity Analysis Module:												
Vol/Sat:	0.13	1.16	1.16	0.20	1.19	1.19	0.99	0.99	0.11	0.92	0.92	0.16
Crit Moves:		****			****		****				****	
Delay/Veh:	13.8	125	124.9	14.8	135	135.2	73.8	73.8	12.2	59.2	59.2	12.8
Delay Adj:	1.00	1.00	1.00	1.00	1.00	1.00	1.00	1.00	1.00	1.00	1.00	1.00
AdjDel/Veh:	13.8	125	124.9	14.8	135	135.2	73.8	73.8	12.2	59.2	59.2	12.8
LOS by Move:	B	F	F	B	F	F	F	F	B	F	F	B
ApproachDel:	113.9			118.6			67.4			52.0		
Delay Adj:	1.00			1.00			1.00			1.00		
ApprAdjDel:	113.9			118.6			67.4			52.0		
LOS by Appr:	F			F			F			F		
AllWayAvgQ:	0.2	12.4	12.4	0.2	13.5	13.5	6.7	6.7	0.1	5.0	5.0	0.2

Traffix 7.9.0415 (c) 2007 Dowling Assoc. Licensed to MMA, LONG BEACH, CA

Overlook Parkway Extension
Future Alt 1 (Gates Closed - No Overlook)
PM Peak Hour

Level Of Service Computation Report
2000 HCM Operations Method (Future Volume Alternative)

Intersection #8 Washington St/Victoria Ave

Cycle (sec):	100	Critical Vol./Cap.(X):	1.162
Loss Time (sec):	16 (Y+R=4.0 sec)	Average Delay (sec/veh):	114.7
Optimal Cycle:	130	Level Of Service:	F

Street Name:	Washington St						Victoria Ave					
Approach:	North Bound			South Bound			East Bound			West Bound		
Movement:	L - T - R			L - T - R			L - T - R			L - T - R		
Control:	Split Phase			Split Phase			Split Phase			Split Phase		
Rights:	Include			Include			Ovl			Ovl		
Min. Green:	7	7	7	7	7	7	7	7	7	7	7	7
Lanes:	0 1	0 1	0	0 1	0 1	0	0 1	0 0	1	0 1	0 0	1
Volume Module:												
Base Vol:	276	525	409	2	559	3	4	135	553	606	104	10
Growth Adj:	1.00	1.00	1.00	1.00	1.00	1.00	1.00	1.00	1.00	1.00	1.00	1.00
Initial Bse:	276	525	409	2	559	3	4	135	553	606	104	10
Added Vol:	0	0	0	0	0	0	0	0	0	0	0	0
PasserByVol:	0	0	0	0	0	0	0	0	0	0	0	0
Initial Fut:	276	525	409	2	559	3	4	135	553	606	104	10
User Adj:	1.00	1.00	1.00	1.00	1.00	1.00	1.00	1.00	1.00	1.00	1.00	1.00
PHF Adj:	1.00	1.00	1.00	1.00	1.00	1.00	1.00	1.00	1.00	1.00	1.00	1.00
PHF Volume:	276	525	409	2	559	3	4	135	553	606	104	10
Reduct Vol:	0	0	0	0	0	0	0	0	0	0	0	0
Reduced Vol:	276	525	409	2	559	3	4	135	553	606	104	10
PCE Adj:	1.00	1.00	1.00	1.00	1.00	1.00	1.00	1.00	1.00	1.00	1.00	1.00
MLF Adj:	1.00	1.00	1.00	1.00	1.00	1.00	1.00	1.00	1.00	1.00	1.00	1.00
FinalVolume:	276	525	409	2	559	3	4	135	553	606	104	10
Saturation Flow Module:												
Sat/Lane:	1900	1900	1900	1900	1900	1900	1900	1900	1900	1900	1900	1900
Adjustment:	0.89	0.89	0.89	0.95	0.95	0.95	1.00	1.00	0.85	0.96	0.96	0.85
Lanes:	0.46	0.87	0.67	0.01	1.98	0.01	0.03	0.97	1.00	0.85	0.15	1.00
Final Sat.:	773	1470	1145	13	3574	19	55	1843	1615	1555	267	1615
Capacity Analysis Module:												
Vol/Sat:	0.36	0.36	0.36	0.16	0.16	0.16	0.07	0.07	0.34	0.39	0.39	0.01
Crit Moves:			****		****		****				****	
Green/Cycle:	0.30	0.30	0.30	0.13	0.13	0.13	0.07	0.07	0.37	0.33	0.33	0.47
Volume/Cap:	1.17	1.17	1.17	1.17	1.17	1.17	1.05	1.05	0.91	1.17	1.17	0.01
Delay/Veh:	123.0	123	123.0	141.3	141	141.3	137.4	137	48.3	127.8	128	14.4
User DelAdj:	1.00	1.00	1.00	1.00	1.00	1.00	1.00	1.00	1.00	1.00	1.00	1.00
AdjDel/Veh:	123.0	123	123.0	141.3	141	141.3	137.4	137	48.3	127.8	128	14.4
LOS by Move:	F	F	F	F	F	F	F	F	D	F	F	B
HCM2kAvgQ:	34	34	34	18	18	18	8	8	20	38	38	0

Note: Queue reported is the number of cars per lane.

Traffix 7.9.0415 (c) 2007 Dowling Assoc. Licensed to MMA, LONG BEACH, CA

Overlook Parkway Extension
Future Alt 1 (Gates Closed - No Overlook)
PM Peak Hour

Level Of Service Computation Report
2000 HCM Operations Method (Future Volume Alternative)

Intersection #20 Washington St/Bradley St

Cycle (sec):	100	Critical Vol./Cap.(X):	0.950
Loss Time (sec):	12 (Y+R=4.0 sec)	Average Delay (sec/veh):	46.6
Optimal Cycle:	130	Level Of Service:	D

Street Name:	Washington St						Bradley St					
Approach:	North Bound			South Bound			East Bound			West Bound		
Movement:	L - T - R			L - T - R			L - T - R			L - T - R		
Control:	Protected			Protected			Permitted			Permitted		
Rights:	Include			Include			Include			Include		
Min. Green:	7	7	7	7	7	7	7	7	7	7	7	7
Lanes:	1 0	1 1	0	1 0	1 1	0	0 1	0 0	1	0 0	1! 0	0
Volume Module:												
Base Vol:	255	1250	44	413	1584	0	4	100	399	33	33	149
Growth Adj:	1.00	1.00	1.00	1.00	1.00	1.00	1.00	1.00	1.00	1.00	1.00	1.00
Initial Bse:	255	1250	44	413	1584	0	4	100	399	33	33	149
Added Vol:	0	0	0	0	0	0	0	0	0	0	0	0
PasserByVol:	0	0	0	0	0	0	0	0	0	0	0	0
Initial Fut:	255	1250	44	413	1584	0	4	100	399	33	33	149
User Adj:	1.00	1.00	1.00	1.00	1.00	1.00	1.00	1.00	1.00	1.00	1.00	1.00
PHF Adj:	1.00	1.00	1.00	1.00	1.00	1.00	1.00	1.00	1.00	1.00	1.00	1.00
PHF Volume:	255	1250	44	413	1584	0	4	100	399	33	33	149
Reduct Vol:	0	0	0	0	0	0	0	0	0	0	0	0
Reduced Vol:	255	1250	44	413	1584	0	4	100	399	33	33	149
PCE Adj:	1.00	1.00	1.00	1.00	1.00	1.00	1.00	1.00	1.00	1.00	1.00	1.00
MLF Adj:	1.00	1.00	1.00	1.00	1.00	1.00	1.00	1.00	1.00	1.00	1.00	1.00
FinalVolume:	255	1250	44	413	1584	0	4	100	399	33	33	149
Saturation Flow Module:												
Sat/Lane:	1900	1900	1900	1900	1900	1900	1900	1900	1900	1900	1900	1900
Adjustment:	0.95	0.95	0.95	0.95	0.95	0.95	0.99	0.99	0.85	0.86	0.86	0.86
Lanes:	1.00	1.93	0.07	1.00	2.00	0.00	0.04	0.96	1.00	0.15	0.15	0.70
Final Sat.:	1805	3470	122	1805	3610	0	72	1810	1615	250	250	1127
Capacity Analysis Module:												
Vol/Sat:	0.14	0.36	0.36	0.23	0.44	0.00	0.06	0.06	0.25	0.13	0.13	0.13
Crit Moves:		****		****					****			
Green/Cycle:	0.15	0.38	0.38	0.24	0.47	0.00	0.26	0.26	0.26	0.26	0.26	0.26
Volume/Cap:	0.94	0.95	0.95	0.95	0.94	0.00	0.21	0.21	0.95	0.51	0.51	0.51
Delay/Veh:	79.5	44.3	44.3	68.0	35.4	0.0	29.2	29.2	67.7	32.6	32.6	32.6
User DelAdj:	1.00	1.00	1.00	1.00	1.00	1.00	1.00	1.00	1.00	1.00	1.00	1.00
AdjDel/Veh:	79.5	44.3	44.3	68.0	35.4	0.0	29.2	29.2	67.7	32.6	32.6	32.6
LOS by Move:	E	D	D	E	D	A	C	C	E	C	C	C
HCM2kAvgQ:	12	26	26	17	29	0	3	3	17	6	6	6

Note: Queue reported is the number of cars per lane.

Traffix 7.9.0415 (c) 2007 Dowling Assoc. Licensed to MMA, LONG BEACH, CA

APPENDIX C:
TRAFFIX WORKSHEETS
2035 CONDITIONS – GATES OPEN

MITIGATION SCENARIO 3 (2035 GATES OPEN)


```
Future Alt 3 AM            Wed Apr 25, 2012 07:51:44                 Page 3-1
-------------------------------------------------------------------------------
                           Overlook Parkway Extension
                   Future Alt 3 (Gates Opened - With Overlook)
                                AM Peak Hour
-------------------------------------------------------------------------------
                       Level Of Service Computation Report
            2000 HCM Operations Method (Future Volume Alternative)
*******************************************************************************
Intersection #3 Madison St/Indiana Ave
*******************************************************************************
Cycle (sec):         100                 Critical Vol./Cap.(X):         0.998
Loss Time (sec):      16 (Y+R=4.0 sec)  Average Delay (sec/veh):        65.2
Optimal Cycle:       130                 Level Of Service:                  E
*******************************************************************************
Street Name:            Madison St                      Indiana Ave
Approach:      North Bound      South Bound       East Bound       West Bound
Movement:     L  -  T  -  R    L  -  T  -  R    L  -  T  -  R    L  -  T  -  R
------------|---------------||---------------||---------------||---------------|
Control:        Protected        Protected        Protected        Protected
Rights:           Include          Include          Include           Ovl
Min. Green:     7    7    7     7    7    7     7    7    7     7    7    7
Lanes:        1  0  1  1  0    1  0  1  1  0    1  0  1  1  0    1  0  2  0  1
------------|---------------||---------------||---------------||---------------|
Volume Module:
Base Vol:      72  821    41   731  480   393   226  640    26    13  273   610
Growth Adj:  1.00 1.00  1.00  1.00 1.00  1.00  1.00 1.00  1.00  1.00 1.00  1.00
Initial Bse:   72  821    41   731  480   393   226  640    26    13  273   610
Added Vol:      0    0     0     0    0     0     0    0     0     0    0     0
PasserByVol:    0    0     0     0    0     0     0    0     0     0    0     0
Initial Fut:   72  821    41   731  480   393   226  640    26    13  273   610
User Adj:    1.00 1.00  1.00  1.00 1.00  1.00  1.00 1.00  1.00  1.00 1.00  1.00
PHF Adj:     1.00 1.00  1.00  1.00 1.00  1.00  1.00 1.00  1.00  1.00 1.00  1.00
PHF Volume:    72  821    41   731  480   393   226  640    26    13  273   610
Reduct Vol:     0    0     0     0    0     0     0    0     0     0    0     0
Reduced Vol:   72  821    41   731  480   393   226  640    26    13  273   610
PCE Adj:     1.00 1.00  1.00  1.00 1.00  1.00  1.00 1.00  1.00  1.00 1.00  1.00
MLF Adj:     1.00 1.00  1.00  1.00 1.00  1.00  1.00 1.00  1.00  1.00 1.00  1.00
FinalVolume:   72  821    41   731  480   393   226  640    26    13  273   610
------------|---------------||---------------||---------------||---------------|
Saturation Flow Module:
Sat/Lane:    1900 1900  1900  1900 1900  1900  1900 1900  1900  1900 1900  1900
Adjustment:  0.95 0.94  0.94  0.95 0.89  0.89  0.95 0.94  0.94  0.95 0.95  0.85
Lanes:       1.00 1.90  0.10  1.00 1.10  0.90  1.00 1.92  0.08  1.00 2.00  1.00
Final Sat.:  1805 3414   171  1805 1852  1516  1805 3448   140  1805 3610  1615
------------|---------------||---------------||---------------||---------------|
Capacity Analysis Module:
Vol/Sat:     0.04 0.24  0.24  0.40 0.26  0.26  0.13 0.19  0.19  0.01 0.08  0.38
Crit Moves:        ****        ****                 ****        ****
Green/Cycle: 0.13 0.22  0.22  0.38 0.47  0.47  0.15 0.17  0.17  0.07 0.09  0.47
Volume/Cap:  0.31 1.08  1.08  1.08 0.55  0.55  0.83 1.08  1.08  0.10 0.83  0.81
Delay/Veh:   40.5 94.3  94.3  89.2 19.3  19.3  60.1  101 100.9  43.9 60.8  29.5
User DelAdj: 1.00 1.00  1.00  1.00 1.00  1.00  1.00 1.00  1.00  1.00 1.00  1.00
AdjDel/Veh:  40.5 94.3  94.3  89.2 19.3  19.3  60.1  101 100.9  43.9 60.8  29.5
LOS by Move:   D    F     F     F    B     B     E    F     F     D    E     C
HCM2kAvgQ:      2   22    22    34   10    10     9   18    18     0    7    18
*******************************************************************************
Note: Queue reported is the number of cars per lane.

  Traffix 7.9.0415 (c) 2007 Dowling Assoc. Licensed to MMA, LONG BEACH, CA
```

Overlook Parkway Extension
Future Alt 3 (Gates Opened - With Overlook)
AM Peak Hour

Level Of Service Computation Report
2000 HCM Operations Method (Future Volume Alternative)

Intersection #5 Madison St/Victoria Ave

Cycle (sec):	100	Critical Vol./Cap.(X):	0.702
Loss Time (sec):	16 (Y+R=4.0 sec)	Average Delay (sec/veh):	38.6
Optimal Cycle:	69	Level Of Service:	D

Street Name:	Madison St						Victoria Ave					
Approach:	North Bound			South Bound			East Bound			West Bound		
Movement:	L - T - R			L - T - R			L - T - R			L - T - R		
Control:	Split Phase			Split Phase			Split Phase			Split Phase		
Rights:	Include			Include			Include			Ovl		
Min. Green:	7	7	7	7	7	7	7	7	7	7	7	7
Lanes:	0 0	1! 0	0	1 0	0 1	0	0 0	1! 0	0	0 1	0 0	1
Volume Module:												
Base Vol:	16	239	38	221	51	25	46	272	2	4	262	420
Growth Adj:	1.00	1.00	1.00	1.00	1.00	1.00	1.00	1.00	1.00	1.00	1.00	1.00
Initial Bse:	16	239	38	221	51	25	46	272	2	4	262	420
Added Vol:	0	0	0	0	0	0	0	0	0	0	0	0
PasserByVol:	0	0	0	0	0	0	0	0	0	0	0	0
Initial Fut:	16	239	38	221	51	25	46	272	2	4	262	420
User Adj:	1.00	1.00	1.00	1.00	1.00	1.00	1.00	1.00	1.00	1.00	1.00	1.00
PHF Adj:	1.00	1.00	1.00	1.00	1.00	1.00	1.00	1.00	1.00	1.00	1.00	1.00
PHF Volume:	16	239	38	221	51	25	46	272	2	4	262	420
Reduct Vol:	0	0	0	0	0	0	0	0	0	0	0	0
Reduced Vol:	16	239	38	221	51	25	46	272	2	4	262	420
PCE Adj:	1.00	1.00	1.00	1.00	1.00	1.00	1.00	1.00	1.00	1.00	1.00	1.00
MLF Adj:	1.00	1.00	1.00	1.00	1.00	1.00	1.00	1.00	1.00	1.00	1.00	1.00
FinalVolume:	16	239	38	221	51	25	46	272	2	4	262	420
Saturation Flow Module:												
Sat/Lane:	1900	1900	1900	1900	1900	1900	1900	1900	1900	1900	1900	1900
Adjustment:	0.98	0.98	0.98	0.95	0.95	0.95	0.99	0.99	0.99	1.00	1.00	0.85
Lanes:	0.05	0.82	0.13	1.00	0.67	0.33	0.14	0.85	0.01	0.02	0.98	1.00
Final Sat.:	102	1517	241	1805	1213	594	271	1602	12	29	1870	1615
Capacity Analysis Module:												
Vol/Sat:	0.16	0.16	0.16	0.12	0.04	0.04	0.17	0.17	0.17	0.14	0.14	0.26
Crit Moves:			****	****					****		****	
Green/Cycle:	0.22	0.22	0.22	0.17	0.17	0.17	0.24	0.24	0.24	0.20	0.20	0.37
Volume/Cap:	0.70	0.70	0.70	0.70	0.24	0.24	0.70	0.70	0.70	0.70	0.70	0.70
Delay/Veh:	41.0	41.0	41.0	45.8	36.0	36.0	39.5	39.5	39.5	43.1	43.1	30.0
User DelAdj:	1.00	1.00	1.00	1.00	1.00	1.00	1.00	1.00	1.00	1.00	1.00	1.00
AdjDel/Veh:	41.0	41.0	41.0	45.8	36.0	36.0	39.5	39.5	39.5	43.1	43.1	30.0
LOS by Move:	D	D	D	D	D	D	D	D	D	D	D	C
HCM2kAvgQ:	10	10	10	8	2	2	10	10	10	9	9	12

Note: Queue reported is the number of cars per lane.

Traffix 7.9.0415 (c) 2007 Dowling Assoc. Licensed to MMA, LONG BEACH, CA

Overlook Parkway Extension
Future Alt 3 (Gates Opened - With Overlook)
AM Peak Hour

Level Of Service Computation Report
2000 HCM 4-Way Stop Method (Future Volume Alternative)

Intersection #7 Washington St/Lincoln Ave

Cycle (sec):	100	Critical Vol./Cap.(X):	1.926
Loss Time (sec):	0 (Y+R=4.0 sec)	Average Delay (sec/veh):	205.9
Optimal Cycle:	0	Level Of Service:	F

Street Name:	Washington St						Lincoln Ave					
Approach:	North Bound			South Bound			East Bound			West Bound		
Movement:	L - T - R			L - T - R			L - T - R			L - T - R		
Control:	Stop Sign			Stop Sign			Stop Sign			Stop Sign		
Rights:	Include			Include			Include			Include		
Min. Green:	7	7	7	7	7	7	7	7	7	7	7	7
Lanes:	1 0	0 1	0	1 0	0 1	0	0 1	0 0	1	0 1	0 0	1
Volume Module:												
Base Vol:	74	815	38	49	367	22	21	325	40	44	191	53
Growth Adj:	1.00	1.00	1.00	1.00	1.00	1.00	1.00	1.00	1.00	1.00	1.00	1.00
Initial Bse:	74	815	38	49	367	22	21	325	40	44	191	53
Added Vol:	0	0	0	0	0	0	0	0	0	0	0	0
PasserByVol:	0	0	0	0	0	0	0	0	0	0	0	0
Initial Fut:	74	815	38	49	367	22	21	325	40	44	191	53
User Adj:	1.00	1.00	1.00	1.00	1.00	1.00	1.00	1.00	1.00	1.00	1.00	1.00
PHF Adj:	1.00	1.00	1.00	1.00	1.00	1.00	1.00	1.00	1.00	1.00	1.00	1.00
PHF Volume:	74	815	38	49	367	22	21	325	40	44	191	53
Reduct Vol:	0	0	0	0	0	0	0	0	0	0	0	0
Reduced Vol:	74	815	38	49	367	22	21	325	40	44	191	53
PCE Adj:	1.00	1.00	1.00	1.00	1.00	1.00	1.00	1.00	1.00	1.00	1.00	1.00
MLF Adj:	1.00	1.00	1.00	1.00	1.00	1.00	1.00	1.00	1.00	1.00	1.00	1.00
FinalVolume:	74	815	38	49	367	22	21	325	40	44	191	53
Saturation Flow Module:												
Adjustment:	1.00	1.00	1.00	1.00	1.00	1.00	1.00	1.00	1.00	1.00	1.00	1.00
Lanes:	1.00	0.96	0.04	1.00	0.94	0.06	0.06	0.94	1.00	0.19	0.81	1.00
Final Sat.:	412	423	20	405	408	24	25	392	454	73	319	428
Capacity Analysis Module:												
Vol/Sat:	0.18	1.93	1.93	0.12	0.90	0.90	0.83	0.83	0.09	0.60	0.60	0.12
Crit Moves:		****			****			****			****	
Delay/Veh:	13.2	444	443.8	12.7	49.4	49.4	39.9	39.9	11.2	23.4	23.4	11.9
Delay Adj:	1.00	1.00	1.00	1.00	1.00	1.00	1.00	1.00	1.00	1.00	1.00	1.00
AdjDel/Veh:	13.2	444	443.8	12.7	49.4	49.4	39.9	39.9	11.2	23.4	23.4	11.9
LOS by Move:	B	F	F	B	E	E	E	E	B	C	C	B
ApproachDel:	409.5			45.3			36.9			21.3		
Delay Adj:	1.00			1.00			1.00			1.00		
ApprAdjDel:	409.5			45.3			36.9			21.3		
LOS by Appr:	F			E			E			C		
AllWayAvgQ:	0.2	53.3	53.3	0.1	4.6	4.6	3.3	3.3	0.1	1.3	1.3	0.1

Traffix 7.9.0415 (c) 2007 Dowling Assoc. Licensed to MMA, LONG BEACH, CA

Overlook Parkway Extension
Future Alt 3 (Gates Opened - With Overlook)
AM Peak Hour

Level Of Service Computation Report
2000 HCM Operations Method (Future Volume Alternative)

Intersection #8 Washington St/Victoria Ave

Cycle (sec): 100 | Critical Vol./Cap.(X): 1.305
Loss Time (sec): 16 (Y+R=4.0 sec) | Average Delay (sec/veh): 167.6
Optimal Cycle: 130 | Level Of Service: F

Street Name:	Washington St						Victoria Ave					
Approach:	North Bound			South Bound			East Bound			West Bound		
Movement:	L -	T -	R	L -	T -	R	L -	T -	R	L -	T -	R
Control:	Split Phase			Split Phase			Split Phase			Split Phase		
Rights:	Include			Include			Ovl			Ovl		
Min. Green:	7	7	7	7	7	7	7	7	7	7	7	7
Lanes:	0 1	0 1	0	0 1	0 1	0	0 1	0 0	1	0 1	0 0	1
Volume Module:												
Base Vol:	553	914	694	7	424	8	9	137	323	349	127	11
Growth Adj:	1.00	1.00	1.00	1.00	1.00	1.00	1.00	1.00	1.00	1.00	1.00	1.00
Initial Bse:	553	914	694	7	424	8	9	137	323	349	127	11
Added Vol:	0	0	0	0	0	0	0	0	0	0	0	0
PasserByVol:	0	0	0	0	0	0	0	0	0	0	0	0
Initial Fut:	553	914	694	7	424	8	9	137	323	349	127	11
User Adj:	1.00	1.00	1.00	1.00	1.00	1.00	1.00	1.00	1.00	1.00	1.00	1.00
PHF Adj:	1.00	1.00	1.00	1.00	1.00	1.00	1.00	1.00	1.00	1.00	1.00	1.00
PHF Volume:	553	914	694	7	424	8	9	137	323	349	127	11
Reduct Vol:	0	0	0	0	0	0	0	0	0	0	0	0
Reduced Vol:	553	914	694	7	424	8	9	137	323	349	127	11
PCE Adj:	1.00	1.00	1.00	1.00	1.00	1.00	1.00	1.00	1.00	1.00	1.00	1.00
MLF Adj:	1.00	1.00	1.00	1.00	1.00	1.00	1.00	1.00	1.00	1.00	1.00	1.00
FinalVolume:	553	914	694	7	424	8	9	137	323	349	127	11
Saturation Flow Module:												
Sat/Lane:	1900	1900	1900	1900	1900	1900	1900	1900	1900	1900	1900	1900
Adjustment:	0.89	0.89	0.89	0.95	0.95	0.95	1.00	1.00	0.85	0.97	0.97	0.85
Lanes:	0.51	0.85	0.64	0.03	1.93	0.04	0.06	0.94	1.00	0.73	0.27	1.00
Final Sat.:	868	1435	1089	57	3473	66	117	1778	1615	1344	489	1615
Capacity Analysis Module:												
Vol/Sat:	0.64	0.64	0.64	0.12	0.12	0.12	0.08	0.08	0.20	0.26	0.26	0.01
Crit Moves:		****		****				****		****		
Green/Cycle:	0.48	0.48	0.48	0.09	0.09	0.09	0.07	0.07	0.55	0.20	0.20	0.29
Volume/Cap:	1.32	1.32	1.32	1.32	1.32	1.32	1.10	1.10	0.36	1.32	1.32	0.02
Delay/Veh:	175.7	176	175.7	210.4	210	210.4	154.3	154	12.8	203.8	204	25.5
User DelAdj:	1.00	1.00	1.00	1.00	1.00	1.00	1.00	1.00	1.00	1.00	1.00	1.00
AdjDel/Veh:	175.7	176	175.7	210.4	210	210.4	154.3	154	12.8	203.8	204	25.5
LOS by Move:	F	F	F	F	F	F	F	F	B	F	F	C
HCM2kAvgQ:	70	70	70	16	16	16	9	9	6	31	31	0

Note: Queue reported is the number of cars per lane.

Traffix 7.9.0415 (c) 2007 Dowling Assoc. Licensed to MMA, LONG BEACH, CA

Overlook Parkway Extension
Future Alt 3 (Gates Opened - With Overlook)
AM Peak Hour

Level Of Service Computation Report
2000 HCM Operations Method (Future Volume Alternative)

Intersection #9 Washington St/Overlook Pkwy

Cycle (sec): 100 | Critical Vol./Cap.(X): 0.952
Loss Time (sec): 12 (Y+R=4.0 sec) | Average Delay (sec/veh): 37.6
Optimal Cycle: 130 | Level Of Service: D

Street Name:	Washington St						Overlook Pkwy					
Approach:	North Bound			South Bound			East Bound			West Bound		
Movement:	L -	T -	R	L -	T -	R	L -	T -	R	L -	T -	R
Control:	Protected			Protected			Protected			Protected		
Rights:	Include			Include			Include			Ovl		
Min. Green:	7	7	7	7	7	7	7	7	7	7	7	7
Lanes:	0 0	1 1	0	2 0	2 0	0	0 0	0 0	0	1 0	0 0	2
Volume Module:												
Base Vol:	0	1950	44	566	626	0	0	0	0	36	0	806
Growth Adj:	1.00	1.00	1.00	1.00	1.00	1.00	1.00	1.00	1.00	1.00	1.00	1.00
Initial Bse:	0	1950	44	566	626	0	0	0	0	36	0	806
Added Vol:	0	0	0	0	0	0	0	0	0	0	0	0
PasserByVol:	0	0	0	0	0	0	0	0	0	0	0	0
Initial Fut:	0	1950	44	566	626	0	0	0	0	36	0	806
User Adj:	1.00	1.00	1.00	1.00	1.00	1.00	1.00	1.00	1.00	1.00	1.00	1.00
PHF Adj:	1.00	1.00	1.00	1.00	1.00	1.00	1.00	1.00	1.00	1.00	1.00	1.00
PHF Volume:	0	1950	44	566	626	0	0	0	0	36	0	806
Reduct Vol:	0	0	0	0	0	0	0	0	0	0	0	0
Reduced Vol:	0	1950	44	566	626	0	0	0	0	36	0	806
PCE Adj:	1.00	1.00	1.00	1.00	1.00	1.00	1.00	1.00	1.00	1.00	1.00	1.00
MLF Adj:	1.00	1.00	1.00	1.00	1.00	1.00	1.00	1.00	1.00	1.00	1.00	1.00
FinalVolume:	0	1950	44	566	626	0	0	0	0	36	0	806
Saturation Flow Module:												
Sat/Lane:	1900	1900	1900	1900	1900	1900	1900	1900	1900	1900	1900	1900
Adjustment:	1.00	0.95	0.95	0.92	0.95	1.00	1.00	1.00	1.00	0.95	1.00	0.75
Lanes:	0.00	1.96	0.04	2.00	2.00	0.00	0.00	0.00	0.00	1.00	0.00	2.00
Final Sat.:	0	3520	79	3502	3610	0	0	0	0	1805	0	2842
Capacity Analysis Module:												
Vol/Sat:	0.00	0.55	0.55	0.16	0.17	0.00	0.00	0.00	0.00	0.02	0.00	0.28
Crit Moves:		****		****								****
Green/Cycle:	0.00	0.58	0.58	0.17	0.54	0.00	0.00	0.00	0.00	0.10	0.00	0.30
Volume/Cap:	0.00	0.95	0.95	0.95	0.32	0.00	0.00	0.00	0.00	0.20	0.00	0.95
Delay/Veh:	0.0	30.1	30.1	66.5	13.1	0.0	0.0	0.0	0.0	42.0	0.0	54.5
User DelAdj:	1.00	1.00	1.00	1.00	1.00	1.00	1.00	1.00	1.00	1.00	1.00	1.00
AdjDel/Veh:	0.0	30.1	30.1	66.5	13.1	0.0	0.0	0.0	0.0	42.0	0.0	54.5
LOS by Move:	A	C	C	E	B	A	A	A	A	D	A	D
HCM2kAvgQ:	0	36	36	13	6	0	0	0	0	1	0	19

Note: Queue reported is the number of cars per lane.

Traffix 7.9.0415 (c) 2007 Dowling Assoc. Licensed to MMA, LONG BEACH, CA

Overlook Parkway Extension
Future Alt 3 (Gates Opened - With Overlook)
AM Peak Hour

Level Of Service Computation Report
2000 HCM Operations Method (Future Volume Alternative)

Intersection #16 Crystal View Ter/Overlook Pkwy

Cycle (sec):	100	Critical Vol./Cap.(X):	0.299
Loss Time (sec):	8 (Y+R=4.0 sec)	Average Delay (sec/veh):	6.8
Optimal Cycle:	24	Level Of Service:	A

Street Name:	Crystal View Ter						Overlook Pkwy					
Approach:	North Bound			South Bound			East Bound			West Bound		
Movement:	L -	T -	R	L -	T -	R	L -	T -	R	L -	T -	R
Control:	Permitted			Permitted			Permitted			Permitted		
Rights:	Include			Include			Include			Include		
Min. Green:	7	7	7	7	7	7	7	7	7	7	7	7
Lanes:	0 0	1! 0	0	0 0	1! 0	0	1 0	1 1	0	1 0	1 1	0
Volume Module:												
Base Vol:	70	0	18	0	0	0	0	658	29	2	772	0
Growth Adj:	1.00	1.00	1.00	1.00	1.00	1.00	1.00	1.00	1.00	1.00	1.00	1.00
Initial Bse:	70	0	18	0	0	0	0	658	29	2	772	0
Added Vol:	0	0	0	0	0	0	0	0	0	0	0	0
PasserByVol:	0	0	0	0	0	0	0	0	0	0	0	0
Initial Fut:	70	0	18	0	0	0	0	658	29	2	772	0
User Adj:	1.00	1.00	1.00	1.00	1.00	1.00	1.00	1.00	1.00	1.00	1.00	1.00
PHF Adj:	1.00	1.00	1.00	1.00	1.00	1.00	1.00	1.00	1.00	1.00	1.00	1.00
PHF Volume:	70	0	18	0	0	0	0	658	29	2	772	0
Reduct Vol:	0	0	0	0	0	0	0	0	0	0	0	0
Reduced Vol:	70	0	18	0	0	0	0	658	29	2	772	0
PCE Adj:	1.00	1.00	1.00	1.00	1.00	1.00	1.00	1.00	1.00	1.00	1.00	1.00
MLF Adj:	1.00	1.00	1.00	1.00	1.00	1.00	1.00	1.00	1.00	1.00	1.00	1.00
FinalVolume:	70	0	18	0	0	0	0	658	29	2	772	0
Saturation Flow Module:												
Sat/Lane:	1900	1900	1900	1900	1900	1900	1900	1900	1900	1900	1900	1900
Adjustment:	0.76	1.00	0.76	1.00	1.00	1.00	1.00	0.94	0.94	0.37	0.95	0.95
Lanes:	0.80	0.00	0.20	0.00	1.00	0.00	1.00	1.92	0.08	1.00	2.00	0.00
Final Sat.:	1141	0	294	0	1900	0	1900	3437	151	697	3610	0
Capacity Analysis Module:												
Vol/Sat:	0.06	0.00	0.06	0.00	0.00	0.00	0.00	0.19	0.19	0.00	0.21	0.00
Crit Moves:	****										****	
Green/Cycle:	0.21	0.00	0.21	0.00	0.00	0.00	0.00	0.71	0.71	0.71	0.71	0.00
Volume/Cap:	0.30	0.00	0.30	0.00	0.00	0.00	0.00	0.27	0.27	0.00	0.30	0.00
Delay/Veh:	34.2	0.0	34.2	0.0	0.0	0.0	0.0	5.1	5.1	4.1	5.2	0.0
User DelAdj:	1.00	1.00	1.00	1.00	1.00	1.00	1.00	1.00	1.00	1.00	1.00	1.00
AdjDel/Veh:	34.2	0.0	34.2	0.0	0.0	0.0	0.0	5.1	5.1	4.1	5.2	0.0
LOS by Move:	C	A	C	A	A	A	A	A	A	A	A	A
HCM2kAvgQ:	2	0	2	0	0	0	0	4	4	0	5	0

Note: Queue reported is the number of cars per lane.

Traffix 7.9.0415 (c) 2007 Dowling Assoc. Licensed to MMA, LONG BEACH, CA

Overlook Parkway Extension
Future Alt 3 (Gates Opened - With Overlook)
AM Peak Hour

Level Of Service Computation Report
2000 HCM Operations Method (Future Volume Alternative)

Intersection #17 Kingdom Dr/Overlook Pkwy

Cycle (sec):	100	Critical Vol./Cap.(X):	0.367
Loss Time (sec):	8 (Y+R=4.0 sec)	Average Delay (sec/veh):	13.5
Optimal Cycle:	26	Level Of Service:	B

Street Name:	Kingdom Dr						Overlook Pkwy					
Approach:	North Bound			South Bound			East Bound			West Bound		
Movement:	L -	T -	R	L -	T -	R	L -	T -	R	L -	T -	R
Control:	Permitted			Permitted			Permitted			Permitted		
Rights:	Include			Include			Include			Include		
Min. Green:	7	7	7	7	7	7	7	7	7	7	7	7
Lanes:	0 0	1! 0	0	1 0	0 0	0	1 0	1 1	0	1 0	1 1	0
Volume Module:												
Base Vol:	82	0	120	6	0	0	0	577	43	42	745	0
Growth Adj:	1.00	1.00	1.00	1.00	1.00	1.00	1.00	1.00	1.00	1.00	1.00	1.00
Initial Bse:	82	0	120	6	0	0	0	577	43	42	745	0
Added Vol:	0	0	0	0	0	0	0	0	0	0	0	0
PasserByVol:	0	0	0	0	0	0	0	0	0	0	0	0
Initial Fut:	82	0	120	6	0	0	0	577	43	42	745	0
User Adj:	1.00	1.00	1.00	1.00	1.00	1.00	1.00	1.00	1.00	1.00	1.00	1.00
PHF Adj:	1.00	1.00	1.00	1.00	1.00	1.00	1.00	1.00	1.00	1.00	1.00	1.00
PHF Volume:	82	0	120	6	0	0	0	577	43	42	745	0
Reduct Vol:	0	0	0	0	0	0	0	0	0	0	0	0
Reduced Vol:	82	0	120	6	0	0	0	577	43	42	745	0
PCE Adj:	1.00	1.00	1.00	1.00	1.00	1.00	1.00	1.00	1.00	1.00	1.00	1.00
MLF Adj:	1.00	1.00	1.00	1.00	1.00	1.00	1.00	1.00	1.00	1.00	1.00	1.00
FinalVolume:	82	0	120	6	0	0	0	577	43	42	745	0
Saturation Flow Module:												
Sat/Lane:	1900	1900	1900	1900	1900	1900	1900	1900	1900	1900	1900	1900
Adjustment:	0.81	1.00	0.81	0.87	1.00	1.00	1.00	0.94	0.94	0.37	0.95	0.95
Lanes:	0.41	0.00	0.59	1.00	0.00	0.00	1.00	1.86	0.14	1.00	2.00	0.00
Final Sat.:	623	0	912	1647	0	0	1900	3326	248	701	3610	0
Capacity Analysis Module:												
Vol/Sat:	0.13	0.00	0.13	0.00	0.00	0.00	0.00	0.17	0.17	0.06	0.21	0.00
Crit Moves:	****										****	
Green/Cycle:	0.36	0.00	0.36	0.36	0.00	0.00	0.00	0.56	0.56	0.56	0.56	0.00
Volume/Cap:	0.37	0.00	0.37	0.01	0.00	0.00	0.00	0.31	0.31	0.11	0.37	0.00
Delay/Veh:	24.1	0.0	24.1	20.7	0.0	0.0	0.0	11.7	11.7	10.3	12.2	0.0
User DelAdj:	1.00	1.00	1.00	1.00	1.00	1.00	1.00	1.00	1.00	1.00	1.00	1.00
AdjDel/Veh:	24.1	0.0	24.1	20.7	0.0	0.0	0.0	11.7	11.7	10.3	12.2	0.0
LOS by Move:	C	A	C	C	A	A	A	B	B	B	B	A
HCM2kAvgQ:	5	0	5	0	0	0	0	5	5	1	7	0

Note: Queue reported is the number of cars per lane.

Traffix 7.9.0415 (c) 2007 Dowling Assoc. Licensed to MMA, LONG BEACH, CA

Overlook Parkway Extension
Future Alt 3 (Gates Opened - With Overlook)
AM Peak Hour

Level Of Service Computation Report
2000 HCM Operations Method (Future Volume Alternative)

Intersection #24 Hawarden Dr/Overlook Pkwy

Cycle (sec): 100 | Critical Vol./Cap.(X): 0.329
Loss Time (sec): 8 (Y+R=4.0 sec) | Average Delay (sec/veh): 9.5
Optimal Cycle: 25 | Level Of Service: A

Street Name:	Hawarden Dr						Overlook Pkwy					
Approach:	North Bound			South Bound			East Bound			West Bound		
Movement:	L -	T -	R	L -	T -	R	L -	T -	R	L -	T -	R
Control:	Permitted			Permitted			Permitted			Permitted		
Rights:	Include			Include			Include			Include		
Min. Green:	7	7	7	7	7	7	7	7	7	7	7	7
Lanes:	0 0	1! 0	0	0 0	1! 0	0	1 0	1 1	0	1 0	1 1	0
Volume Module:												
Base Vol:	73	43	12	19	5	13	17	508	37	1	748	37
Growth Adj:	1.00	1.00	1.00	1.00	1.00	1.00	1.00	1.00	1.00	1.00	1.00	1.00
Initial Bse:	73	43	12	19	5	13	17	508	37	1	748	37
Added Vol:	0	0	0	0	0	0	0	0	0	0	0	0
PasserByVol:	0	0	0	0	0	0	0	0	0	0	0	0
Initial Fut:	73	43	12	19	5	13	17	508	37	1	748	37
User Adj:	1.00	1.00	1.00	1.00	1.00	1.00	1.00	1.00	1.00	1.00	1.00	1.00
PHF Adj:	1.00	1.00	1.00	1.00	1.00	1.00	1.00	1.00	1.00	1.00	1.00	1.00
PHF Volume:	73	43	12	19	5	13	17	508	37	1	748	37
Reduct Vol:	0	0	0	0	0	0	0	0	0	0	0	0
Reduced Vol:	73	43	12	19	5	13	17	508	37	1	748	37
PCE Adj:	1.00	1.00	1.00	1.00	1.00	1.00	1.00	1.00	1.00	1.00	1.00	1.00
MLF Adj:	1.00	1.00	1.00	1.00	1.00	1.00	1.00	1.00	1.00	1.00	1.00	1.00
FinalVolume:	73	43	12	19	5	13	17	508	37	1	748	37
Saturation Flow Module:												
Sat/Lane:	1900	1900	1900	1900	1900	1900	1900	1900	1900	1900	1900	1900
Adjustment:	0.80	0.80	0.80	0.82	0.82	0.82	0.32	0.94	0.94	0.43	0.94	0.94
Lanes:	0.57	0.34	0.09	0.51	0.14	0.35	1.00	1.86	0.14	1.00	1.91	0.09
Final Sat.:	872	513	143	801	211	548	604	3331	243	815	3416	169
Capacity Analysis Module:												
Vol/Sat:	0.08	0.08	0.08	0.02	0.02	0.02	0.03	0.15	0.15	0.00	0.22	0.22
Crit Moves:		****									****	
Green/Cycle:	0.25	0.25	0.25	0.25	0.25	0.25	0.67	0.67	0.67	0.67	0.67	0.67
Volume/Cap:	0.33	0.33	0.33	0.09	0.09	0.09	0.04	0.23	0.23	0.00	0.33	0.33
Delay/Veh:	30.8	30.8	30.8	28.6	28.6	28.6	5.8	6.7	6.7	5.6	7.2	7.2
User DelAdj:	1.00	1.00	1.00	1.00	1.00	1.00	1.00	1.00	1.00	1.00	1.00	1.00
AdjDel/Veh:	30.8	30.8	30.8	28.6	28.6	28.6	5.8	6.7	6.7	5.6	7.2	7.2
LOS by Move:	C	C	C	C	C	C	A	A	A	A	A	A
HCM2kAvgQ:	3	3	3	1	1	1	0	3	3	0	5	5

Note: Queue reported is the number of cars per lane.

Traffix 7.9.0415 (c) 2007 Dowling Assoc. Licensed to MMA, LONG BEACH, CA

Overlook Parkway Extension
Future Alt 3 (Gates Opened - With Overlook)
AM Peak Hour

Level Of Service Computation Report
2000 HCM Operations Method (Future Volume Alternative)

Intersection #28 Orozco Dr/Overlook Pkwy

Cycle (sec): 100 | Critical Vol./Cap.(X): 0.293
Loss Time (sec): 8 (Y+R=4.0 sec) | Average Delay (sec/veh): 3.6
Optimal Cycle: 24 | Level Of Service: A

Street Name:	Orozco Dr						Overlook Pkwy					
Approach:	North Bound			South Bound			East Bound			West Bound		
Movement:	L -	T -	R	L -	T -	R	L -	T -	R	L -	T -	R
Control:	Permitted			Permitted			Permitted			Permitted		
Rights:	Include			Include			Include			Include		
Min. Green:	7	7	7	7	7	7	7	7	7	7	7	7
Lanes:	0 0	1! 0	0	0 0	1! 0	0	1 0	1 1	0	1 0	1 1	0
Volume Module:												
Base Vol:	8	4	4	36	2	2	19	511	4	3	733	118
Growth Adj:	1.00	1.00	1.00	1.00	1.00	1.00	1.00	1.00	1.00	1.00	1.00	1.00
Initial Bse:	8	4	4	36	2	2	19	511	4	3	733	118
Added Vol:	0	0	0	0	0	0	0	0	0	0	0	0
PasserByVol:	0	0	0	0	0	0	0	0	0	0	0	0
Initial Fut:	8	4	4	36	2	2	19	511	4	3	733	118
User Adj:	1.00	1.00	1.00	1.00	1.00	1.00	1.00	1.00	1.00	1.00	1.00	1.00
PHF Adj:	1.00	1.00	1.00	1.00	1.00	1.00	1.00	1.00	1.00	1.00	1.00	1.00
PHF Volume:	8	4	4	36	2	2	19	511	4	3	733	118
Reduct Vol:	0	0	0	0	0	0	0	0	0	0	0	0
Reduced Vol:	8	4	4	36	2	2	19	511	4	3	733	118
PCE Adj:	1.00	1.00	1.00	1.00	1.00	1.00	1.00	1.00	1.00	1.00	1.00	1.00
MLF Adj:	1.00	1.00	1.00	1.00	1.00	1.00	1.00	1.00	1.00	1.00	1.00	1.00
FinalVolume:	8	4	4	36	2	2	19	511	4	3	733	118
Saturation Flow Module:												
Sat/Lane:	1900	1900	1900	1900	1900	1900	1900	1900	1900	1900	1900	1900
Adjustment:	0.84	0.84	0.84	0.72	0.72	0.72	0.32	0.95	0.95	0.46	0.93	0.93
Lanes:	0.50	0.25	0.25	0.90	0.05	0.05	1.00	1.98	0.02	1.00	1.72	0.28
Final Sat.:	800	400	400	1238	69	69	610	3578	28	870	3044	490
Capacity Analysis Module:												
Vol/Sat:	0.01	0.01	0.01	0.03	0.03	0.03	0.03	0.14	0.14	0.00	0.24	0.24
Crit Moves:					****						****	
Green/Cycle:	0.10	0.10	0.10	0.10	0.10	0.10	0.82	0.82	0.82	0.82	0.82	0.82
Volume/Cap:	0.10	0.10	0.10	0.29	0.29	0.29	0.04	0.17	0.17	0.00	0.29	0.29
Delay/Veh:	41.3	41.3	41.3	43.0	43.0	43.0	1.7	1.9	1.9	1.6	2.2	2.2
User DelAdj:	1.00	1.00	1.00	1.00	1.00	1.00	1.00	1.00	1.00	1.00	1.00	1.00
AdjDel/Veh:	41.3	41.3	41.3	43.0	43.0	43.0	1.7	1.9	1.9	1.6	2.2	2.2
LOS by Move:	D	D	D	D	D	D	A	A	A	A	A	A
HCM2kAvgQ:	1	1	1	1	1	1	0	2	2	0	3	3

Note: Queue reported is the number of cars per lane.

Traffix 7.9.0415 (c) 2007 Dowling Assoc. Licensed to MMA, LONG BEACH, CA

Overlook Parkway Extension
Future Alt 3 (Gates Opened - With Overlook)
PM Peak Hour

Level Of Service Computation Report
2000 HCM Operations Method (Future Volume Alternative)

Intersection #3 Madison St/Indiana Ave

Cycle (sec):	100	Critical Vol./Cap.(X):	1.147
Loss Time (sec):	16 (Y+R=4.0 sec)	Average Delay (sec/veh):	80.5
Optimal Cycle:	130	Level Of Service:	F

Street Name:	Madison St						Indiana Ave					
Approach:	North Bound			South Bound			East Bound			West Bound		
Movement:	L - T - R			L - T - R			L - T - R			L - T - R		
Control:	Protected			Protected			Protected			Protected		
Rights:	Include			Include			Include			Ovl		
Min. Green:	7	7	7	7	7	7	7	7	7	7	7	7
Lanes:	1 0	1 1	0	1 0	1 1	0	1 0	1 1	0	1 0	2 0	1
Volume Module:												
Base Vol:	109	792	51	647	1172	313	417	697	101	53	499	642
Growth Adj:	1.00	1.00	1.00	1.00	1.00	1.00	1.00	1.00	1.00	1.00	1.00	1.00
Initial Bse:	109	792	51	647	1172	313	417	697	101	53	499	642
Added Vol:	0	0	0	0	0	0	0	0	0	0	0	0
PasserByVol:	0	0	0	0	0	0	0	0	0	0	0	0
Initial Fut:	109	792	51	647	1172	313	417	697	101	53	499	642
User Adj:	1.00	1.00	1.00	1.00	1.00	1.00	1.00	1.00	1.00	1.00	1.00	1.00
PHF Adj:	1.00	1.00	1.00	1.00	1.00	1.00	1.00	1.00	1.00	1.00	1.00	1.00
PHF Volume:	109	792	51	647	1172	313	417	697	101	53	499	642
Reduct Vol:	0	0	0	0	0	0	0	0	0	0	0	0
Reduced Vol:	109	792	51	647	1172	313	417	697	101	53	499	642
PCE Adj:	1.00	1.00	1.00	1.00	1.00	1.00	1.00	1.00	1.00	1.00	1.00	1.00
MLF Adj:	1.00	1.00	1.00	1.00	1.00	1.00	1.00	1.00	1.00	1.00	1.00	1.00
FinalVolume:	109	792	51	647	1172	313	417	697	101	53	499	642
Saturation Flow Module:												
Sat/Lane:	1900	1900	1900	1900	1900	1900	1900	1900	1900	1900	1900	1900
Adjustment:	0.95	0.94	0.94	0.95	0.92	0.92	0.95	0.93	0.93	0.95	0.95	0.85
Lanes:	1.00	1.88	0.12	1.00	1.58	0.42	1.00	1.75	0.25	1.00	2.00	1.00
Final Sat.:	1805	3361	216	1805	2758	737	1805	3093	448	1805	3610	1615
Capacity Analysis Module:												
Vol/Sat:	0.06	0.24	0.24	0.36	0.42	0.42	0.23	0.23	0.23	0.03	0.14	0.40
Crit Moves:		****		****			****				****	
Green/Cycle:	0.07	0.21	0.21	0.31	0.44	0.44	0.20	0.25	0.25	0.08	0.12	0.43
Volume/Cap:	0.82	1.15	1.15	1.15	0.96	0.96	1.15	0.92	0.92	0.38	1.15	0.92
Delay/Veh:	78.2	121	121.3	119.7	40.5	40.5	133.3	51.1	51.1	45.7	134	43.8
User DelAdj:	1.00	1.00	1.00	1.00	1.00	1.00	1.00	1.00	1.00	1.00	1.00	1.00
AdjDel/Veh:	78.2	121	121.3	119.7	40.5	40.5	133.3	51.1	51.1	45.7	134	43.8
LOS by Move:	E	F	F	F	D	D	F	D	D	D	F	D
HCM2kAvgQ:	6	24	24	34	29	29	23	17	17	2	15	23

Note: Queue reported is the number of cars per lane.

Traffix 7.9.0415 (c) 2007 Dowling Assoc. Licensed to MMA, LONG BEACH, CA

Overlook Parkway Extension
Future Alt 3 (Gates Opened - With Overlook)
PM Peak Hour

Level Of Service Computation Report
2000 HCM Operations Method (Future Volume Alternative)

Intersection #5 Madison St/Victoria Ave

Cycle (sec):	100	Critical Vol./Cap.(X):	0.921
Loss Time (sec):	16 (Y+R=4.0 sec)	Average Delay (sec/veh):	51.3
Optimal Cycle:	125	Level Of Service:	D

Street Name:	Madison St						Victoria Ave					
Approach:	North Bound			South Bound			East Bound			West Bound		
Movement:	L - T - R			L - T - R			L - T - R			L - T - R		
Control:	Split Phase			Split Phase			Split Phase			Split Phase		
Rights:	Include			Include			Include			Ovl		
Min. Green:	7	7	7	7	7	7	7	7	7	7	7	7
Lanes:	0 0	1! 0	0	1 0	0 1	0	0 0	1! 0	0	0 1	0 0	1
Volume Module:												
Base Vol:	14	236	62	557	376	36	46	273	18	19	200	276
Growth Adj:	1.00	1.00	1.00	1.00	1.00	1.00	1.00	1.00	1.00	1.00	1.00	1.00
Initial Bse:	14	236	62	557	376	36	46	273	18	19	200	276
Added Vol:	0	0	0	0	0	0	0	0	0	0	0	0
PasserByVol:	0	0	0	0	0	0	0	0	0	0	0	0
Initial Fut:	14	236	62	557	376	36	46	273	18	19	200	276
User Adj:	1.00	1.00	1.00	1.00	1.00	1.00	1.00	1.00	1.00	1.00	1.00	1.00
PHF Adj:	1.00	1.00	1.00	1.00	1.00	1.00	1.00	1.00	1.00	1.00	1.00	1.00
PHF Volume:	14	236	62	557	376	36	46	273	18	19	200	276
Reduct Vol:	0	0	0	0	0	0	0	0	0	0	0	0
Reduced Vol:	14	236	62	557	376	36	46	273	18	19	200	276
PCE Adj:	1.00	1.00	1.00	1.00	1.00	1.00	1.00	1.00	1.00	1.00	1.00	1.00
MLF Adj:	1.00	1.00	1.00	1.00	1.00	1.00	1.00	1.00	1.00	1.00	1.00	1.00
FinalVolume:	14	236	62	557	376	36	46	273	18	19	200	276
Saturation Flow Module:												
Sat/Lane:	1900	1900	1900	1900	1900	1900	1900	1900	1900	1900	1900	1900
Adjustment:	0.97	0.97	0.97	0.95	0.99	0.99	0.99	0.99	0.99	1.00	1.00	0.85
Lanes:	0.04	0.76	0.20	1.00	0.91	0.09	0.14	0.81	0.05	0.09	0.91	1.00
Final Sat.:	83	1396	367	1805	1711	164	256	1518	100	164	1728	1615
Capacity Analysis Module:												
Vol/Sat:	0.17	0.17	0.17	0.31	0.22	0.22	0.18	0.18	0.18	0.12	0.12	0.17
Crit Moves:			****	****					****	****		
Green/Cycle:	0.18	0.18	0.18	0.34	0.34	0.34	0.20	0.20	0.20	0.13	0.13	0.46
Volume/Cap:	0.92	0.92	0.92	0.92	0.66	0.66	0.92	0.92	0.92	0.92	0.92	0.37
Delay/Veh:	69.6	69.6	69.6	51.4	30.8	30.8	67.4	67.4	67.4	80.6	80.6	17.8
User DelAdj:	1.00	1.00	1.00	1.00	1.00	1.00	1.00	1.00	1.00	1.00	1.00	1.00
AdjDel/Veh:	69.6	69.6	69.6	51.4	30.8	30.8	67.4	67.4	67.4	80.6	80.6	17.8
LOS by Move:	E	E	E	D	C	C	E	E	E	F	F	B
HCM2kAvgQ:	13	13	13	21	12	12	14	14	14	10	10	6

Note: Queue reported is the number of cars per lane.

Traffix 7.9.0415 (c) 2007 Dowling Assoc. Licensed to MMA, LONG BEACH, CA

Overlook Parkway Extension
Future Alt 3 (Gates Opened - With Overlook)
PM Peak Hour

Level Of Service Computation Report
2000 HCM 4-Way Stop Method (Future Volume Alternative)

Intersection #7 Washington St/Lincoln Ave

Cycle (sec):	100	Critical Vol./Cap.(X):	1.445
Loss Time (sec):	0 (Y+R=4.0 sec)	Average Delay (sec/veh):	128.0
Optimal Cycle:	0	Level Of Service:	F

Street Name:	Washington St									Lincoln Ave								
Approach:	North Bound				South Bound				East Bound				West Bound					
Movement:	L	-	T	-	R	L	-	T	-	R	L	-	T	-	R	L	-	T	-	R	L	-	T	-	R
Control:	Stop Sign				Stop Sign				Stop Sign				Stop Sign					
Rights:	Include				Include				Include				Include					
Min. Green:	7	7	7		7	7	7		7	7	7		7	7	7			
Lanes:	1	0	0	1	0	1	0	0	1	0	0	1	0	0	1	0	1	0	0	1					
Volume Module:																									
Base Vol:	106	528	36		46	612	44		16	296	94		36	152	18			
Growth Adj:	1.00	1.00	1.00		1.00	1.00	1.00		1.00	1.00	1.00		1.00	1.00	1.00			
Initial Bse:	106	528	36		46	612	44		16	296	94		36	152	18			
Added Vol:	0	0	0		0	0	0		0	0	0		0	0	0			
PasserByVol:	0	0	0		0	0	0		0	0	0		0	0	0			
Initial Fut:	106	528	36		46	612	44		16	296	94		36	152	18			
User Adj:	1.00	1.00	1.00		1.00	1.00	1.00		1.00	1.00	1.00		1.00	1.00	1.00			
PHF Adj:	1.00	1.00	1.00		1.00	1.00	1.00		1.00	1.00	1.00		1.00	1.00	1.00			
PHF Volume:	106	528	36		46	612	44		16	296	94		36	152	18			
Reduct Vol:	0	0	0		0	0	0		0	0	0		0	0	0			
Reduced Vol:	106	528	36		46	612	44		16	296	94		36	152	18			
PCE Adj:	1.00	1.00	1.00		1.00	1.00	1.00		1.00	1.00	1.00		1.00	1.00	1.00			
MLF Adj:	1.00	1.00	1.00		1.00	1.00	1.00		1.00	1.00	1.00		1.00	1.00	1.00			
FinalVolume:	106	528	36		46	612	44		16	296	94		36	152	18			
Saturation Flow Module:																		
Adjustment:	1.00	1.00	1.00		1.00	1.00	1.00		1.00	1.00	1.00		1.00	1.00	1.00			
Lanes:	1.00	0.94	0.06		1.00	0.93	0.07		0.05	0.95	1.00		0.19	0.81	1.00			
Final Sat.:	425	427	29		421	423	30		22	404	465		75	318	430			
Capacity Analysis Module:																		
Vol/Sat:	0.25	1.24	1.24		0.11	1.45	1.45		0.73	0.73	0.20		0.48	0.48	0.04			
Crit Moves:			****			****				****				****				
Delay/Veh:	13.9	148	148.5		12.2	234	234.2		30.7	30.7	12.3		19.5	19.5	11.3			
Delay Adj:	1.00	1.00	1.00		1.00	1.00	1.00		1.00	1.00	1.00		1.00	1.00	1.00			
AdjDel/Veh:	13.9	148	148.5		12.2	234	234.2		30.7	30.7	12.3		19.5	19.5	11.3			
LOS by Move:	B	F	F		B	F	F		D	D	B		C	C	B			
ApproachDel:	127.2				219.6				26.5				18.8					
Delay Adj:	1.00				1.00				1.00				1.00					
ApprAdjDel:	127.2				219.6				26.5				18.8					
LOS by Appr:	F				F				D				C					
AllWayAvgQ:	0.3	17.5	17.5		0.1	28.2	28.2		2.3	2.3	0.2		0.8	0.8	0.0			

Traffix 7.9.0415 (c) 2007 Dowling Assoc. Licensed to MMA, LONG BEACH, CA

Overlook Parkway Extension
Future Alt 3 (Gates Opened - With Overlook)
PM Peak Hour

Level Of Service Computation Report
2000 HCM Operations Method (Future Volume Alternative)

Intersection #8 Washington St/Victoria Ave

Cycle (sec):	100	Critical Vol./Cap.(X):	1.338
Loss Time (sec):	16 (Y+R=4.0 sec)	Average Delay (sec/veh):	198.2
Optimal Cycle:	130	Level Of Service:	F

Street Name:	Washington St									Victoria Ave								
Approach:	North Bound				South Bound				East Bound				West Bound					
Movement:	L	-	T	-	R	L	-	T	-	R	L	-	T	-	R	L	-	T	-	R	L	-	T	-	R
Control:	Split Phase				Split Phase				Split Phase				Split Phase					
Rights:	Include				Include				Ovl				Ovl					
Min. Green:	7	7	7		7	7	7		7	7	7		7	7	7			
Lanes:	0	1	0	1	0	0	1	0	1	0	0	1	0	0	1	0	1	0	0	1					
Volume Module:																									
Base Vol:	379	658	413		1	742	3		3	118	757		679	100	8			
Growth Adj:	1.00	1.00	1.00		1.00	1.00	1.00		1.00	1.00	1.00		1.00	1.00	1.00			
Initial Bse:	379	658	413		1	742	3		3	118	757		679	100	8			
Added Vol:	0	0	0		0	0	0		0	0	0		0	0	0			
PasserByVol:	0	0	0		0	0	0		0	0	0		0	0	0			
Initial Fut:	379	658	413		1	742	3		3	118	757		679	100	8			
User Adj:	1.00	1.00	1.00		1.00	1.00	1.00		1.00	1.00	1.00		1.00	1.00	1.00			
PHF Adj:	1.00	1.00	1.00		1.00	1.00	1.00		1.00	1.00	1.00		1.00	1.00	1.00			
PHF Volume:	379	658	413		1	742	3		3	118	757		679	100	8			
Reduct Vol:	0	0	0		0	0	0		0	0	0		0	0	0			
Reduced Vol:	379	658	413		1	742	3		3	118	757		679	100	8			
PCE Adj:	1.00	1.00	1.00		1.00	1.00	1.00		1.00	1.00	1.00		1.00	1.00	1.00			
MLF Adj:	1.00	1.00	1.00		1.00	1.00	1.00		1.00	1.00	1.00		1.00	1.00	1.00			
FinalVolume:	379	658	413		1	742	3		3	118	757		679	100	8			
Saturation Flow Module:																		
Sat/Lane:	1900	1900	1900		1900	1900	1900		1900	1900	1900		1900	1900	1900			
Adjustment:	0.90	0.90	0.90		0.95	0.95	0.95		1.00	1.00	0.85		0.96	0.96	0.85			
Lanes:	0.52	0.91	0.57		0.01	1.98	0.01		0.02	0.98	1.00		0.87	0.13	1.00			
Final Sat.:	891	1547	971		5	3587	15		47	1851	1615		1587	234	1615			
Capacity Analysis Module:																		
Vol/Sat:	0.43	0.43	0.43		0.21	0.21	0.21		0.06	0.06	0.47		0.43	0.43	0.00			
Crit Moves:			****		****				****				****					
Green/Cycle:	0.31	0.31	0.31		0.15	0.15	0.15		0.07	0.07	0.38		0.31	0.31	0.46			
Volume/Cap:	1.38	1.38	1.38		1.38	1.38	1.38		0.91	0.91	1.24		1.38	1.38	0.01			
Delay/Veh:	210.1	210	210.1		223.4	223	223.4		97.9	97.9	151.4		214.9	215	14.6			
User DelAdj:	1.00	1.00	1.00		1.00	1.00	1.00		1.00	1.00	1.00		1.00	1.00	1.00			
AdjDel/Veh:	210.1	210	210.1		223.4	223	223.4		97.9	97.9	151.4		214.9	215	14.6			
LOS by Move:	F	F	F		F	F	F		F	F	F		F	F	B			
HCM2kAvgQ:	51	51	51		27	27	27		7	7	43		52	52	0			

Note: Queue reported is the number of cars per lane.

Traffix 7.9.0415 (c) 2007 Dowling Assoc. Licensed to MMA, LONG BEACH, CA

Overlook Parkway Extension
Future Alt 3 (Gates Opened - With Overlook)
PM Peak Hour

Level Of Service Computation Report
2000 HCM Operations Method (Future Volume Alternative)

Intersection #9 Washington St/Overlook Pkwy

Cycle (sec):	100	Critical Vol./Cap.(X):	0.810
Loss Time (sec):	12 (Y+R=4.0 sec)	Average Delay (sec/veh):	23.2
Optimal Cycle:	79	Level Of Service:	C

Street Name:	Washington St								Overlook Pkwy								
Approach:	North Bound				South Bound				East Bound				West Bound				
Movement:	L	-	T	-	R	L	-	T	-	R	L	-	T	-	R	L	-	T	-	R	L	-	T	-	R
Control:	Protected					Protected					Protected					Protected				
Rights:	Include					Include					Include					Ovl				
Min. Green:	7	7	7			7	7	7			7	7	7			7	7	7		
Lanes:	0	0	1	1	0	2	0	2	0	0	0	0	0	0	0	1	0	0	0	2
Volume Module:																				
Base Vol:	0	1343		49	1074	1650		0		0	0		0	0		34		0	817	
Growth Adj:	1.00	1.00		1.00	1.00	1.00		1.00		1.00	1.00		1.00	1.00		1.00		1.00	1.00	
Initial Bse:	0	1343		49	1074	1650		0		0	0		0	0		34		0	817	
Added Vol:	0	0		0	0	0		0		0	0		0	0		0		0	0	
PasserByVol:	0	0		0	0	0		0		0	0		0	0		0		0	0	
Initial Fut:	0	1343		49	1074	1650		0		0	0		0	0		34		0	817	
User Adj:	1.00	1.00		1.00	1.00	1.00		1.00		1.00	1.00		1.00	1.00		1.00		1.00	1.00	
PHF Adj:	1.00	1.00		1.00	1.00	1.00		1.00		1.00	1.00		1.00	1.00		1.00		1.00	1.00	
PHF Volume:	0	1343		49	1074	1650		0		0	0		0	0		34		0	817	
Reduct Vol:	0	0		0	0	0		0		0	0		0	0		0		0	0	
Reduced Vol:	0	1343		49	1074	1650		0		0	0		0	0		34		0	817	
PCE Adj:	1.00	1.00		1.00	1.00	1.00		1.00		1.00	1.00		1.00	1.00		1.00		1.00	1.00	
MLF Adj:	1.00	1.00		1.00	1.00	1.00		1.00		1.00	1.00		1.00	1.00		1.00		1.00	1.00	
FinalVolume:	0	1343		49	1074	1650		0		0	0		0	0		34		0	817	
Saturation Flow Module:																				
Sat/Lane:	1900	1900		1900	1900	1900		1900		1900	1900		1900	1900		1900		1900	1900	
Adjustment:	1.00	0.95		0.95	0.92	0.95		1.00		1.00	1.00		1.00	1.00		0.95		1.00	0.75	
Lanes:	0.00	1.93		0.07	2.00	2.00		0.00		0.00	0.00		0.00	0.00		1.00		0.00	2.00	
Final Sat.:	0	3466		126	3502	3610		0		0	0		0	1805		0		0	2842	
Capacity Analysis Module:																				
Vol/Sat:	0.00	0.39		0.39	0.31	0.46		0.00		0.00	0.00		0.00	0.02		0.00		0.29		
Crit Moves:		****			****									****						
Green/Cycle:	0.00	0.45		0.45	0.36	0.70		0.00		0.00	0.00		0.00	0.07		0.00		0.43		
Volume/Cap:	0.00	0.86		0.86	0.86	0.65		0.00		0.00	0.00		0.00	0.27		0.00		0.67		
Delay/Veh:	0.0	29.3		29.3	35.8	8.8		0.0		0.0	0.0		0.0	45.2		0.0		24.5		
User DelAdj:	1.00	1.00		1.00	1.00	1.00		1.00		1.00	1.00		1.00	1.00		1.00		1.00	1.00	
AdjDel/Veh:	0.0	29.3		29.3	35.8	8.8		0.0		0.0	0.0		0.0	45.2		0.0		24.5		
LOS by Move:	A	C		C	D	A		A		A	A		A	D		A		C		
HCM2kAvgQ:	0	23		23	19	15		0		0	0		0	1		0		12		

Note: Queue reported is the number of cars per lane.

Traffix 7.9.0415 (c) 2007 Dowling Assoc. Licensed to MMA, LONG BEACH, CA

Overlook Parkway Extension
Future Alt 3 (Gates Opened - With Overlook)
PM Peak Hour

Level Of Service Computation Report
2000 HCM Operations Method (Future Volume Alternative)

Intersection #16 Crystal View Ter/Overlook Pkwy

Cycle (sec):	100	Critical Vol./Cap.(X):	0.416
Loss Time (sec):	8 (Y+R=4.0 sec)	Average Delay (sec/veh):	3.2
Optimal Cycle:	28	Level Of Service:	A

Street Name:	Crystal View Ter								Overlook Pkwy								
Approach:	North Bound				South Bound				East Bound				West Bound				
Movement:	L	-	T	-	R	L	-	T	-	R	L	-	T	-	R	L	-	T	-	R	L	-	T	-	R
Control:	Permitted					Permitted					Permitted					Permitted				
Rights:	Include					Include					Include					Include				
Min. Green:	7	7	7			7	7	7			7	7	7			7	7	7		
Lanes:	0	0	1!	0	0	0	0	1	0	0	1	0	1	1	0	1	0	1	1	0
Volume Module:																				
Base Vol:	40		0		12		0		2		0		1	956		252		16	1009	
Growth Adj:	1.00	1.00		1.00	1.00	1.00		1.00		1.00	1.00		1.00	1.00		1.00		1.00	1.00	
Initial Bse:	40		0		12		0		2		0		1	956		252		16	1009	
Added Vol:	0		0		0		0		0		0		0	0		0		0	0	
PasserByVol:	0		0		0		0		0		0		0	0		0		0	0	
Initial Fut:	40		0		12		0		2		0		1	956		252		16	1009	
User Adj:	1.00	1.00		1.00	1.00	1.00		1.00		1.00	1.00		1.00	1.00		1.00		1.00	1.00	
PHF Adj:	1.00	1.00		1.00	1.00	1.00		1.00		1.00	1.00		1.00	1.00		1.00		1.00	1.00	
PHF Volume:	40		0		12		0		2		0		1	956		252		16	1009	
Reduct Vol:	0		0		0		0		0		0		0	0		0		0	0	
Reduced Vol:	40		0		12		0		2		0		1	956		252		16	1009	
PCE Adj:	1.00	1.00		1.00	1.00	1.00		1.00		1.00	1.00		1.00	1.00		1.00		1.00	1.00	
MLF Adj:	1.00	1.00		1.00	1.00	1.00		1.00		1.00	1.00		1.00	1.00		1.00		1.00	1.00	
FinalVolume:	40		0		12		0		2		0		1	956		252		16	1009	
Saturation Flow Module:																				
Sat/Lane:	1900	1900		1900	1900	1900		1900		1900	1900		1900	1900		1900		1900	1900	
Adjustment:	0.74	1.00		0.74	1.00	1.00		1.00		1.00	1.00		0.27	0.92		0.92		0.22	0.95	
Lanes:	0.77	0.00		0.23	0.00	1.00		0.00		1.00	0.00		1.00	1.58		0.42		1.00	2.00	
Final Sat.:	1081		0		324		0		1900		0		521	2768		730		414	3610	
Capacity Analysis Module:																				
Vol/Sat:	0.04	0.00		0.04	0.00	0.00		0.00		0.00	0.00		0.35	0.35		0.04		0.28	0.00	
Crit Moves:	****												****							
Green/Cycle:	0.09	0.00		0.09	0.00	0.09		0.00		0.83	0.83		0.83	0.83		0.83		0.83	0.00	
Volume/Cap:	0.42	0.00		0.42	0.00	0.01		0.00		0.00	0.42		0.42	0.05		0.34		0.00		
Delay/Veh:	45.3	0.0		45.3	0.0	41.6		0.0		1.4	2.3		2.3	1.5		2.1		0.0		
User DelAdj:	1.00	1.00		1.00	1.00	1.00		1.00		1.00	1.00		1.00	1.00		1.00		1.00	1.00	
AdjDel/Veh:	45.3	0.0		45.3	0.0	41.6		0.0		1.4	2.3		2.3	1.5		2.1		0.0		
LOS by Move:	D	A		D	A	D		A		A	A		A	A		A		A		
HCM2kAvgQ:	2	0		2	0	0		0		0	5		5	0		4		0		

Note: Queue reported is the number of cars per lane.

Traffix 7.9.0415 (c) 2007 Dowling Assoc. Licensed to MMA, LONG BEACH, CA

Overlook Parkway Extension
Future Alt 3 (Gates Opened - With Overlook)
PM Peak Hour

Level Of Service Computation Report
2000 HCM Operations Method (Future Volume Alternative)

Intersection #17 Kingdom Dr/Overlook Pkwy

Cycle (sec):	100	Critical Vol./Cap.(X):	0.598
Loss Time (sec):	8 (Y+R=4.0 sec)	Average Delay (sec/veh):	7.2
Optimal Cycle:	38	Level Of Service:	A

Street Name:	Kingdom Dr						Overlook Pkwy					
Approach:	North Bound			South Bound			East Bound			West Bound		
Movement:	L -	T -	R	L -	T -	R	L -	T -	R	L -	T -	R
Control:	Permitted			Permitted			Permitted			Permitted		
Rights:	Include			Include			Include			Include		
Min. Green:	7	7	7	7	7	7	7	7	7	7	7	7
Lanes:	0 0	1! 0	0	1 0	0 0	0	1 0	1 1	0	1 0	1 1	0
Volume Module:												
Base Vol:	56	0	95	4	0	0	0	1129	132	164	853	5
Growth Adj:	1.00	1.00	1.00	1.00	1.00	1.00	1.00	1.00	1.00	1.00	1.00	1.00
Initial Bse:	56	0	95	4	0	0	0	1129	132	164	853	5
Added Vol:	0	0	0	0	0	0	0	0	0	0	0	0
PasserByVol:	0	0	0	0	0	0	0	0	0	0	0	0
Initial Fut:	56	0	95	4	0	0	0	1129	132	164	853	5
User Adj:	1.00	1.00	1.00	1.00	1.00	1.00	1.00	1.00	1.00	1.00	1.00	1.00
PHF Adj:	1.00	1.00	1.00	1.00	1.00	1.00	1.00	1.00	1.00	1.00	1.00	1.00
PHF Volume:	56	0	95	4	0	0	0	1129	132	164	853	5
Reduct Vol:	0	0	0	0	0	0	0	0	0	0	0	0
Reduced Vol:	56	0	95	4	0	0	0	1129	132	164	853	5
PCE Adj:	1.00	1.00	1.00	1.00	1.00	1.00	1.00	1.00	1.00	1.00	1.00	1.00
MLF Adj:	1.00	1.00	1.00	1.00	1.00	1.00	1.00	1.00	1.00	1.00	1.00	1.00
FinalVolume:	56	0	95	4	0	0	0	1129	132	164	853	5
Saturation Flow Module:												
Sat/Lane:	1900	1900	1900	1900	1900	1900	1900	1900	1900	1900	1900	1900
Adjustment:	0.81	1.00	0.81	0.85	1.00	1.00	1.00	0.93	0.93	0.19	0.95	0.95
Lanes:	0.37	0.00	0.63	1.00	0.00	0.00	1.00	1.79	0.21	1.00	1.99	0.01
Final Sat.:	568	0	964	1613	0	0	1900	3180	372	363	3585	21
Capacity Analysis Module:												
Vol/Sat:	0.10	0.00	0.10	0.00	0.00	0.00	0.00	0.35	0.35	0.45	0.24	0.24
Crit Moves:	****									****		
Green/Cycle:	0.16	0.00	0.16	0.16	0.00	0.00	0.00	0.76	0.76	0.76	0.76	0.76
Volume/Cap:	0.60	0.00	0.60	0.02	0.00	0.00	0.00	0.47	0.47	0.60	0.32	0.32
Delay/Veh:	42.6	0.0	42.6	35.0	0.0	0.0	0.0	4.8	4.8	9.1	4.0	4.0
User DelAdj:	1.00	1.00	1.00	1.00	1.00	1.00	1.00	1.00	1.00	1.00	1.00	1.00
AdjDel/Veh:	42.6	0.0	42.6	35.0	0.0	0.0	0.0	4.8	4.8	9.1	4.0	4.0
LOS by Move:	D	A	D	C	A	A	A	A	A	A	A	A
HCM2kAvgQ:	5	0	5	0	0	0	0	8	8	3	4	4

Note: Queue reported is the number of cars per lane.

Traffix 7.9.0415 (c) 2007 Dowling Assoc. Licensed to MMA, LONG BEACH, CA

Overlook Parkway Extension
Future Alt 3 (Gates Opened - With Overlook)
PM Peak Hour

Level Of Service Computation Report
2000 HCM Operations Method (Future Volume Alternative)

Intersection #24 Hawarden Dr/Overlook Pkwy

Cycle (sec):	100	Critical Vol./Cap.(X):	0.418
Loss Time (sec):	8 (Y+R=4.0 sec)	Average Delay (sec/veh):	8.1
Optimal Cycle:	28	Level Of Service:	A

Street Name:	Hawarden Dr						Overlook Pkwy					
Approach:	North Bound			South Bound			East Bound			West Bound		
Movement:	L -	T -	R	L -	T -	R	L -	T -	R	L -	T -	R
Control:	Permitted			Permitted			Permitted			Permitted		
Rights:	Include			Include			Include			Include		
Min. Green:	7	7	7	7	7	7	7	7	7	7	7	7
Lanes:	0 0	1! 0	0	0 0	1! 0	0	1 0	1 1	0	1 0	1 1	0
Volume Module:												
Base Vol:	35	6	12	66	29	33	14	1016	55	6	795	29
Growth Adj:	1.00	1.00	1.00	1.00	1.00	1.00	1.00	1.00	1.00	1.00	1.00	1.00
Initial Bse:	35	6	12	66	29	33	14	1016	55	6	795	29
Added Vol:	0	0	0	0	0	0	0	0	0	0	0	0
PasserByVol:	0	0	0	0	0	0	0	0	0	0	0	0
Initial Fut:	35	6	12	66	29	33	14	1016	55	6	795	29
User Adj:	1.00	1.00	1.00	1.00	1.00	1.00	1.00	1.00	1.00	1.00	1.00	1.00
PHF Adj:	1.00	1.00	1.00	1.00	1.00	1.00	1.00	1.00	1.00	1.00	1.00	1.00
PHF Volume:	35	6	12	66	29	33	14	1016	55	6	795	29
Reduct Vol:	0	0	0	0	0	0	0	0	0	0	0	0
Reduced Vol:	35	6	12	66	29	33	14	1016	55	6	795	29
PCE Adj:	1.00	1.00	1.00	1.00	1.00	1.00	1.00	1.00	1.00	1.00	1.00	1.00
MLF Adj:	1.00	1.00	1.00	1.00	1.00	1.00	1.00	1.00	1.00	1.00	1.00	1.00
FinalVolume:	35	6	12	66	29	33	14	1016	55	6	795	29
Saturation Flow Module:												
Sat/Lane:	1900	1900	1900	1900	1900	1900	1900	1900	1900	1900	1900	1900
Adjustment:	0.78	0.78	0.78	0.79	0.79	0.79	0.31	0.94	0.94	0.23	0.95	0.95
Lanes:	0.66	0.11	0.23	0.51	0.23	0.26	1.00	1.90	0.10	1.00	1.93	0.07
Final Sat.:	978	168	335	774	340	387	595	3397	184	445	3466	126
Capacity Analysis Module:												
Vol/Sat:	0.04	0.04	0.04	0.09	0.09	0.09	0.02	0.30	0.30	0.01	0.23	0.23
Crit Moves:					****			****				
Green/Cycle:	0.20	0.20	0.20	0.20	0.20	0.20	0.72	0.72	0.72	0.72	0.72	0.72
Volume/Cap:	0.18	0.18	0.18	0.42	0.42	0.42	0.03	0.42	0.42	0.02	0.32	0.32
Delay/Veh:	33.1	33.1	33.1	35.6	35.6	35.6	4.2	5.9	5.9	4.1	5.3	5.3
User DelAdj:	1.00	1.00	1.00	1.00	1.00	1.00	1.00	1.00	1.00	1.00	1.00	1.00
AdjDel/Veh:	33.1	33.1	33.1	35.6	35.6	35.6	4.2	5.9	5.9	4.1	5.3	5.3
LOS by Move:	C	C	C	D	D	D	A	A	A	A	A	A
HCM2kAvgQ:	1	1	1	4	4	4	0	7	7	0	5	5

Note: Queue reported is the number of cars per lane.

Traffix 7.9.0415 (c) 2007 Dowling Assoc. Licensed to MMA, LONG BEACH, CA

```
Future Alt 3 PM            Wed Apr 25, 2012 07:51:52                Page 12-1
--------------------------------------------------------------------------------
                           Overlook Parkway Extension
                   Future Alt 3 (Gates Opened - With Overlook)
                                   PM Peak Hour
--------------------------------------------------------------------------------
                        Level Of Service Computation Report
             2000 HCM Operations Method (Future Volume Alternative)
********************************************************************************
Intersection #28 Orozco Dr/Overlook Pkwy
********************************************************************************
Cycle (sec):         100                 Critical Vol./Cap.(X):         0.498
Loss Time (sec):       8 (Y+R=4.0 sec)  Average Delay (sec/veh):        13.2
Optimal Cycle:        32                 Level Of Service:                 B
********************************************************************************
Street Name:            Orozco Dr                       Overlook Pkwy
Approach:      North Bound      South Bound       East Bound       West Bound
Movement:     L  -  T  -  R    L  -  T  -  R    L  -  T  -  R    L  -  T  -  R
------------|---------------||---------------||---------------||---------------|
Control:         Permitted        Permitted        Permitted        Permitted
Rights:           Include          Include          Include          Include
Min. Green:     7    7    7     7    7    7     7    7    7     7    7    7
Lanes:        0  0  1! 0  0    0  0  1! 0  0    1  0  1  1  0    1  0  1  1  0
------------|---------------||---------------||---------------||---------------|
Volume Module:
Base Vol:       9    1    2   194    8   21    28 1058   10     0  879   46
Growth Adj:  1.00 1.00 1.00  1.00 1.00 1.00  1.00 1.00 1.00  1.00 1.00 1.00
Initial Bse:    9    1    2   194    8   21    28 1058   10     0  879   46
Added Vol:      0    0    0     0    0    0     0    0    0     0    0    0
PasserByVol:    0    0    0     0    0    0     0    0    0     0    0    0
Initial Fut:    9    1    2   194    8   21    28 1058   10     0  879   46
User Adj:    1.00 1.00 1.00  1.00 1.00 1.00  1.00 1.00 1.00  1.00 1.00 1.00
PHF Adj:     1.00 1.00 1.00  1.00 1.00 1.00  1.00 1.00 1.00  1.00 1.00 1.00
PHF Volume:     9    1    2   194    8   21    28 1058   10     0  879   46
Reduct Vol:     0    0    0     0    0    0     0    0    0     0    0    0
Reduced Vol:    9    1    2   194    8   21    28 1058   10     0  879   46
PCE Adj:     1.00 1.00 1.00  1.00 1.00 1.00  1.00 1.00 1.00  1.00 1.00 1.00
MLF Adj:     1.00 1.00 1.00  1.00 1.00 1.00  1.00 1.00 1.00  1.00 1.00 1.00
FinalVolume:    9    1    2   194    8   21    28 1058   10     0  879   46
------------|---------------||---------------||---------------||---------------|
Saturation Flow Module:
Sat/Lane:    1900 1900 1900  1900 1900 1900  1900 1900 1900  1900 1900 1900
Adjustment:  0.83 0.83 0.83  0.72 0.72 0.72  0.25 0.95 0.95  1.00 0.94 0.94
Lanes:       0.75 0.08 0.17  0.87 0.04 0.09  1.00 1.98 0.02  1.00 1.90 0.10
Final Sat.:  1181  131  262  1196   49  129   479 3573   34  1900 3406  178
------------|---------------||---------------||---------------||---------------|
Capacity Analysis Module:
Vol/Sat:     0.01 0.01 0.01  0.16 0.16 0.16  0.06 0.30 0.30  0.00 0.26 0.26
Crit Moves:                          ****             ****
Green/Cycle: 0.33 0.33 0.33  0.33 0.33 0.33  0.59 0.59 0.59  0.00 0.59 0.59
Volume/Cap:  0.02 0.02 0.02  0.50 0.50 0.50  0.10 0.50 0.50  0.00 0.43 0.43
Delay/Veh:   22.9 22.9 22.9  28.0 28.0 28.0   8.9 11.9 11.9   0.0 11.2 11.2
User DelAdj: 1.00 1.00 1.00  1.00 1.00 1.00  1.00 1.00 1.00  1.00 1.00 1.00
AdjDel/Veh:  22.9 22.9 22.9  28.0 28.0 28.0   8.9 11.9 11.9   0.0 11.2 11.2
LOS by Move:   C    C    C     C    C    C     A    B    B     A    B    B
HCM2kAvgQ:     0    0    0     6    6    6     0   10   10     0    8    8
********************************************************************************
Note: Queue reported is the number of cars per lane.

  Traffix 7.9.0415 (c) 2007 Dowling Assoc. Licensed to MMA, LONG BEACH, CA
```


APPENDIX C:
TRAFFIX WORKSHEETS
2035 CONDITIONS – GATES OPEN
MITIGATION SCENARIO 4 (2035 GATES OPEN)

Overlook Parkway Extension
Future Alt A
AM Peak Hour

Level Of Service Computation Report
2000 HCM Operations Method (Future Volume Alternative)

Intersection #4 Madison St/Lincoln Ave

Cycle (sec): 100 | Critical Vol./Cap.(X): 0.660
Loss Time (sec): 16 (Y+R=4.0 sec) | Average Delay (sec/veh): 31.7
Optimal Cycle: 64 | Level Of Service: C

Street Name:	Madison St						Lincoln Ave					
Approach:	North Bound			South Bound			East Bound			West Bound		
Movement:	L -	T -	R	L -	T -	R	L -	T -	R	L -	T -	R
Control:	Protected			Protected			Protected			Protected		
Rights:	Include			Include			Include			Include		
Min. Green:	7	7	7	7	7	7	7	7	7	7	7	7
Lanes:	1 0	1 1	0	1 0	2 0	1	1 0	0 1	0	1 0	1 1	0
Volume Module:												
Base Vol:	194	1085	18	44	729	173	144	249	127	27	185	57
Growth Adj:	1.00	1.00	1.00	1.00	1.00	1.00	1.00	1.00	1.00	1.00	1.00	1.00
Initial Bse:	194	1085	18	44	729	173	144	249	127	27	185	57
Added Vol:	0	0	0	0	0	0	0	0	0	0	0	0
PasserByVol:	0	0	0	0	0	0	0	0	0	0	0	0
Initial Fut:	194	1085	18	44	729	173	144	249	127	27	185	57
User Adj:	1.00	1.00	1.00	1.00	1.00	1.00	1.00	1.00	1.00	1.00	1.00	1.00
PHF Adj:	1.00	1.00	1.00	1.00	1.00	1.00	1.00	1.00	1.00	1.00	1.00	1.00
PHF Volume:	194	1085	18	44	729	173	144	249	127	27	185	57
Reduct Vol:	0	0	0	0	0	0	0	0	0	0	0	0
Reduced Vol:	194	1085	18	44	729	173	144	249	127	27	185	57
PCE Adj:	1.00	1.00	1.00	1.00	1.00	1.00	1.00	1.00	1.00	1.00	1.00	1.00
MLF Adj:	1.00	1.00	1.00	1.00	1.00	1.00	1.00	1.00	1.00	1.00	1.00	1.00
FinalVolume:	194	1085	18	44	729	173	144	249	127	27	185	57
Saturation Flow Module:												
Sat/Lane:	1900	1900	1900	1900	1900	1900	1900	1900	1900	1900	1900	1900
Adjustment:	0.95	0.95	0.95	0.95	0.95	0.85	0.95	0.95	0.95	0.95	0.92	0.92
Lanes:	1.00	1.97	0.03	1.00	2.00	1.00	1.00	0.66	0.34	1.00	1.53	0.47
Final Sat.:	1805	3544	59	1805	3610	1615	1805	1194	609	1805	2663	821
Capacity Analysis Module:												
Vol/Sat:	0.11	0.31	0.31	0.02	0.20	0.11	0.08	0.21	0.21	0.01	0.07	0.07
Crit Moves:		****		****				****		****		
Green/Cycle:	0.17	0.42	0.42	0.07	0.32	0.32	0.19	0.28	0.28	0.07	0.17	0.17
Volume/Cap:	0.64	0.74	0.74	0.35	0.64	0.34	0.42	0.74	0.74	0.21	0.42	0.42
Delay/Veh:	43.1	26.5	26.5	46.0	30.4	26.5	36.6	37.9	37.9	44.8	37.9	37.9
User DelAdj:	1.00	1.00	1.00	1.00	1.00	1.00	1.00	1.00	1.00	1.00	1.00	1.00
AdjDel/Veh:	43.1	26.5	26.5	46.0	30.4	26.5	36.6	37.9	37.9	44.8	37.9	37.9
LOS by Move:	D	C	C	D	C	C	D	D	D	D	D	D
HCM2kAvgQ:	7	16	16	2	11	4	4	12	12	1	4	4

Note: Queue reported is the number of cars per lane.

Traffix 7.9.0415 (c) 2007 Dowling Assoc. Licensed to MMA, LONG BEACH, CA

Overlook Parkway Extension
Future Alt A
AM Peak Hour

Level Of Service Computation Report
2000 HCM Operations Method (Future Volume Alternative)

Intersection #5 Madison St/Victoria Ave

Cycle (sec): 100 | Critical Vol./Cap.(X): 0.978
Loss Time (sec): 16 (Y+R=4.0 sec) | Average Delay (sec/veh): 56.9
Optimal Cycle: 130 | Level Of Service: E

Street Name:	Madison St						Victoria Ave					
Approach:	North Bound			South Bound			East Bound			West Bound		
Movement:	L -	T -	R	L -	T -	R	L -	T -	R	L -	T -	R
Control:	Split Phase			Split Phase			Split Phase			Split Phase		
Rights:	Include			Include			Ovl			Ovl		
Min. Green:	7	7	7	7	7	7	7	7	7	7	7	7
Lanes:	0 1	0 1	0	0 1	0 1	0	0 1	0 0	1	0 1	0 0	1
Volume Module:												
Base Vol:	269	1025	37	17	860	34	87	114	222	26	135	54
Growth Adj:	1.00	1.00	1.00	1.00	1.00	1.00	1.00	1.00	1.00	1.00	1.00	1.00
Initial Bse:	269	1025	37	17	860	34	87	114	222	26	135	54
Added Vol:	0	0	0	0	0	0	0	0	0	0	0	0
PasserByVol:	0	0	0	0	0	0	0	0	0	0	0	0
Initial Fut:	269	1025	37	17	860	34	87	114	222	26	135	54
User Adj:	1.00	1.00	1.00	1.00	1.00	1.00	1.00	1.00	1.00	1.00	1.00	1.00
PHF Adj:	1.00	1.00	1.00	1.00	1.00	1.00	1.00	1.00	1.00	1.00	1.00	1.00
PHF Volume:	269	1025	37	17	860	34	87	114	222	26	135	54
Reduct Vol:	0	0	0	0	0	0	0	0	0	0	0	0
Reduced Vol:	269	1025	37	17	860	34	87	114	222	26	135	54
PCE Adj:	1.00	1.00	1.00	1.00	1.00	1.00	1.00	1.00	1.00	1.00	1.00	1.00
MLF Adj:	1.00	1.00	1.00	1.00	1.00	1.00	1.00	1.00	1.00	1.00	1.00	1.00
FinalVolume:	269	1025	37	17	860	34	87	114	222	26	135	54
Saturation Flow Module:												
Sat/Lane:	1900	1900	1900	1900	1900	1900	1900	1900	1900	1900	1900	1900
Adjustment:	0.94	0.94	0.94	0.94	0.94	0.94	0.98	0.98	0.85	0.99	0.99	0.85
Lanes:	0.40	1.54	0.06	0.04	1.89	0.07	0.43	0.57	1.00	0.16	0.84	1.00
Final Sat.:	719	2741	99	67	3384	134	805	1055	1615	304	1580	1615
Capacity Analysis Module:												
Vol/Sat:	0.37	0.37	0.37	0.25	0.25	0.25	0.11	0.11	0.14	0.09	0.09	0.03
Crit Moves:	****				****		****				****	
Green/Cycle:	0.38	0.38	0.38	0.26	0.26	0.26	0.11	0.11	0.49	0.09	0.09	0.35
Volume/Cap:	0.98	0.98	0.98	0.98	0.98	0.98	0.98	0.98	0.28	0.98	0.98	0.10
Delay/Veh:	49.7	49.7	49.7	60.8	60.8	60.8	100.6	101	15.1	108.9	109	22.1
User DelAdj:	1.00	1.00	1.00	1.00	1.00	1.00	1.00	1.00	1.00	1.00	1.00	1.00
AdjDel/Veh:	49.7	49.7	49.7	60.8	60.8	60.8	100.6	101	15.1	108.9	109	22.1
LOS by Move:	D	D	D	E	E	E	F	F	B	F	F	C
HCM2kAvgQ:	28	28	28	20	20	20	10	10	4	9	9	1

Note: Queue reported is the number of cars per lane.

Traffix 7.9.0415 (c) 2007 Dowling Assoc. Licensed to MMA, LONG BEACH, CA

Overlook Parkway Extension
Future Alt A
AM Peak Hour

Level Of Service Computation Report
2000 HCM Operations Method (Future Volume Alternative)

Intersection #9 Washington St/Overlook Pkwy

Cycle (sec):	100	Critical Vol./Cap.(X):	1.000
Loss Time (sec):	12 (Y+R=4.0 sec)	Average Delay (sec/veh):	46.8
Optimal Cycle:	130	Level Of Service:	D

Street Name:	Washington St								Overlook Pkwy					
Approach:	North Bound			South Bound			East Bound			West Bound				
Movement:	L	- T	- R	L	- T	- R	L	- T	- R	L	- T	- R		
Control:	Protected			Protected			Protected			Protected				
Rights:	Include			Include			Include			Ovl				
Min. Green:	7	7	7	7	7	7	7	7	7	7	7	7		
Lanes:	0	0 1	1 0	2	0 2	0 0	0	0 0	0 0	1	0 0	0 2		
Volume Module:														
Base Vol:	0	1911	88	793	710	0	0	0	0	69	0	917		
Growth Adj:	1.00	1.00	1.00	1.00	1.00	1.00	1.00	1.00	1.00	1.00	1.00	1.00		
Initial Bse:	0	1911	88	793	710	0	0	0	0	69	0	917		
Added Vol:	0	0	0	0	0	0	0	0	0	0	0	0		
PasserByVol:	0	0	0	0	0	0	0	0	0	0	0	0		
Initial Fut:	0	1911	88	793	710	0	0	0	0	69	0	917		
User Adj:	1.00	1.00	1.00	1.00	1.00	1.00	1.00	1.00	1.00	1.00	1.00	1.00		
PHF Adj:	1.00	1.00	1.00	1.00	1.00	1.00	1.00	1.00	1.00	1.00	1.00	1.00		
PHF Volume:	0	1911	88	793	710	0	0	0	0	69	0	917		
Reduct Vol:	0	0	0	0	0	0	0	0	0	0	0	0		
Reduced Vol:	0	1911	88	793	710	0	0	0	0	69	0	917		
PCE Adj:	1.00	1.00	1.00	1.00	1.00	1.00	1.00	1.00	1.00	1.00	1.00	1.00		
MLF Adj:	1.00	1.00	1.00	1.00	1.00	1.00	1.00	1.00	1.00	1.00	1.00	1.00		
FinalVolume:	0	1911	88	793	710	0	0	0	0	69	0	917		
Saturation Flow Module:														
Sat/Lane:	1900	1900	1900	1900	1900	1900	1900	1900	1900	1900	1900	1900		
Adjustment:	1.00	0.94	0.94	0.92	0.95	1.00	1.00	1.00	1.00	0.95	1.00	0.75		
Lanes:	0.00	1.91	0.09	2.00	2.00	0.00	0.00	0.00	0.00	1.00	0.00	2.00		
Final Sat.:	0	3427	158	3502	3610	0	0	0	0	1805	0	2842		
Capacity Analysis Module:														
Vol/Sat:	0.00	0.56	0.56	0.23	0.20	0.00	0.00	0.00	0.00	0.04	0.00	0.32		
Crit Moves:		****		****								****		
Green/Cycle:	0.00	0.56	0.56	0.23	0.58	0.00	0.00	0.00	0.00	0.08	0.00	0.32		
Volume/Cap:	0.00	1.00	1.00	1.00	0.34	0.00	0.00	0.00	0.00	0.46	0.00	1.00		
Delay/Veh:	0.0	42.3	42.3	70.7	11.2	0.0	0.0	0.0	0.0	45.9	0.0	63.7		
User DelAdj:	1.00	1.00	1.00	1.00	1.00	1.00	1.00	1.00	1.00	1.00	1.00	1.00		
AdjDel/Veh:	0.0	42.3	42.3	70.7	11.2	0.0	0.0	0.0	0.0	45.9	0.0	63.7		
LOS by Move:	A	D	D	E	B	A	A	A	A	D	A	E		
HCM2kAvgQ:	0	41	41	19	6	0	0	0	0	3	0	23		

Note: Queue reported is the number of cars per lane.

Traffix 7.9.0415 (c) 2007 Dowling Assoc. Licensed to MMA, LONG BEACH, CA

Overlook Parkway Extension
Future Alt A
AM Peak Hour

Level Of Service Computation Report
2000 HCM Operations Method (Future Volume Alternative)

Intersection #16 Crystal View Ter/Overlook Pkwy

Cycle (sec):	100	Critical Vol./Cap.(X):	0.359
Loss Time (sec):	8 (Y+R=4.0 sec)	Average Delay (sec/veh):	8.2
Optimal Cycle:	26	Level Of Service:	A

Street Name:	Crystal View Ter								Overlook Pkwy					
Approach:	North Bound			South Bound			East Bound			West Bound				
Movement:	L	- T	- R	L	- T	- R	L	- T	- R	L	- T	- R		
Control:	Permitted			Permitted			Permitted			Permitted				
Rights:	Include			Include			Include			Include				
Min. Green:	7	7	7	7	7	7	7	7	7	7	7	7		
Lanes:	0	0 1!	0 0	0	0 1!	0 0	1	0 1	1 0	1	0 1	1 0		
Volume Module:														
Base Vol:	94	0	24	0	0	0	0	792	29	2	893	0		
Growth Adj:	1.00	1.00	1.00	1.00	1.00	1.00	1.00	1.00	1.00	1.00	1.00	1.00		
Initial Bse:	94	0	24	0	0	0	0	792	29	2	893	0		
Added Vol:	0	0	0	0	0	0	0	0	0	0	0	0		
PasserByVol:	0	0	0	0	0	0	0	0	0	0	0	0		
Initial Fut:	94	0	24	0	0	0	0	792	29	2	893	0		
User Adj:	1.00	1.00	1.00	1.00	1.00	1.00	1.00	1.00	1.00	1.00	1.00	1.00		
PHF Adj:	1.00	1.00	1.00	1.00	1.00	1.00	1.00	1.00	1.00	1.00	1.00	1.00		
PHF Volume:	94	0	24	0	0	0	0	792	29	2	893	0		
Reduct Vol:	0	0	0	0	0	0	0	0	0	0	0	0		
Reduced Vol:	94	0	24	0	0	0	0	792	29	2	893	0		
PCE Adj:	1.00	1.00	1.00	1.00	1.00	1.00	1.00	1.00	1.00	1.00	1.00	1.00		
MLF Adj:	1.00	1.00	1.00	1.00	1.00	1.00	1.00	1.00	1.00	1.00	1.00	1.00		
FinalVolume:	94	0	24	0	0	0	0	792	29	2	893	0		
Saturation Flow Module:														
Sat/Lane:	1900	1900	1900	1900	1900	1900	1900	1900	1900	1900	1900	1900		
Adjustment:	0.75	1.00	0.75	1.00	1.00	1.00	1.00	0.95	0.95	0.31	0.95	0.95		
Lanes:	0.80	0.00	0.20	0.00	1.00	0.00	1.00	1.93	0.07	1.00	2.00	0.00		
Final Sat.:	1130	0	288	0	1900	0	1900	3465	127	587	3610	0		
Capacity Analysis Module:														
Vol/Sat:	0.08	0.00	0.08	0.00	0.00	0.00	0.00	0.23	0.23	0.00	0.25	0.00		
Crit Moves:	****										****			
Green/Cycle:	0.23	0.00	0.23	0.00	0.00	0.00	0.00	0.69	0.69	0.69	0.69	0.00		
Volume/Cap:	0.36	0.00	0.36	0.00	0.00	0.00	0.00	0.33	0.33	0.00	0.36	0.00		
Delay/Veh:	32.9	0.0	32.9	0.0	0.0	0.0	0.0	6.4	6.4	4.9	6.5	0.0		
User DelAdj:	1.00	1.00	1.00	1.00	1.00	1.00	1.00	1.00	1.00	1.00	1.00	1.00		
AdjDel/Veh:	32.9	0.0	32.9	0.0	0.0	0.0	0.0	6.4	6.4	4.9	6.5	0.0		
LOS by Move:	C	A	C	A	A	A	A	A	A	A	A	A		
HCM2kAvgQ:	3	0	3	0	0	0	0	5	5	0	6	0		

Note: Queue reported is the number of cars per lane.

Traffix 7.9.0415 (c) 2007 Dowling Assoc. Licensed to MMA, LONG BEACH, CA

Overlook Parkway Extension
Future Alt A
AM Peak Hour

Level Of Service Computation Report
2000 HCM Operations Method (Future Volume Alternative)

Intersection #17 Kingdom Dr/Overlook Pkwy

Cycle (sec):	100	Critical Vol./Cap.(X):	0.450
Loss Time (sec):	8 (Y+R=4.0 sec)	Average Delay (sec/veh):	14.7
Optimal Cycle:	29	Level Of Service:	B

Street Name:	Kingdom Dr						Overlook Pkwy					
Approach:	North Bound			South Bound			East Bound			West Bound		
Movement:	L -	T -	R	L -	T -	R	L -	T -	R	L -	T -	R
Control:	Permitted			Permitted			Permitted			Permitted		
Rights:	Include			Include			Include			Include		
Min. Green:	7	7	7	7	7	7	7	7	7	7	7	7
Lanes:	0 0	1! 0	0	1 0	0 0	0	1 0	1 1	0	1 0	1 1	0
Volume Module:												
Base Vol:	119	0	130	7	0	0	0	707	50	36	894	0
Growth Adj:	1.00	1.00	1.00	1.00	1.00	1.00	1.00	1.00	1.00	1.00	1.00	1.00
Initial Bse:	119	0	130	7	0	0	0	707	50	36	894	0
Added Vol:	0	0	0	0	0	0	0	0	0	0	0	0
PasserByVol:	0	0	0	0	0	0	0	0	0	0	0	0
Initial Fut:	119	0	130	7	0	0	0	707	50	36	894	0
User Adj:	1.00	1.00	1.00	1.00	1.00	1.00	1.00	1.00	1.00	1.00	1.00	1.00
PHF Adj:	1.00	1.00	1.00	1.00	1.00	1.00	1.00	1.00	1.00	1.00	1.00	1.00
PHF Volume:	119	0	130	7	0	0	0	707	50	36	894	0
Reduct Vol:	0	0	0	0	0	0	0	0	0	0	0	0
Reduced Vol:	119	0	130	7	0	0	0	707	50	36	894	0
PCE Adj:	1.00	1.00	1.00	1.00	1.00	1.00	1.00	1.00	1.00	1.00	1.00	1.00
MLF Adj:	1.00	1.00	1.00	1.00	1.00	1.00	1.00	1.00	1.00	1.00	1.00	1.00
FinalVolume:	119	0	130	7	0	0	0	707	50	36	894	0
Saturation Flow Module:												
Sat/Lane:	1900	1900	1900	1900	1900	1900	1900	1900	1900	1900	1900	1900
Adjustment:	0.79	1.00	0.79	0.85	1.00	1.00	1.00	0.94	0.94	0.30	0.95	0.95
Lanes:	0.48	0.00	0.52	1.00	0.00	0.00	1.00	1.87	0.13	1.00	2.00	0.00
Final Sat.:	716	0	782	1615	0	0	1900	3338	236	572	3610	0
Capacity Analysis Module:												
Vol/Sat:	0.17	0.00	0.17	0.00	0.00	0.00	0.00	0.21	0.21	0.06	0.25	0.00
Crit Moves:	****										****	
Green/Cycle:	0.37	0.00	0.37	0.37	0.00	0.00	0.00	0.55	0.55	0.55	0.55	0.00
Volume/Cap:	0.45	0.00	0.45	0.01	0.00	0.00	0.00	0.38	0.38	0.11	0.45	0.00
Delay/Veh:	24.4	0.0	24.4	20.0	0.0	0.0	0.0	12.9	12.9	10.9	13.6	0.0
User DelAdj:	1.00	1.00	1.00	1.00	1.00	1.00	1.00	1.00	1.00	1.00	1.00	1.00
AdjDel/Veh:	24.4	0.0	24.4	20.0	0.0	0.0	0.0	12.9	12.9	10.9	13.6	0.0
LOS by Move:	C	A	C	B	A	A	A	B	B	B	B	A
HCM2kAvgQ:	6	0	6	0	0	0	0	7	7	1	9	0

Note: Queue reported is the number of cars per lane.

Traffix 7.9.0415 (c) 2007 Dowling Assoc. Licensed to MMA, LONG BEACH, CA

Overlook Parkway Extension
Future Alt A
AM Peak Hour

Level Of Service Computation Report
2000 HCM Operations Method (Future Volume Alternative)

Intersection #24 Hawarden Dr/Overlook Pkwy

Cycle (sec):	100	Critical Vol./Cap.(X):	0.391
Loss Time (sec):	8 (Y+R=4.0 sec)	Average Delay (sec/veh):	8.5
Optimal Cycle:	27	Level Of Service:	A

Street Name:	Hawarden Dr						Overlook Pkwy					
Approach:	North Bound			South Bound			East Bound			West Bound		
Movement:	L -	T -	R	L -	T -	R	L -	T -	R	L -	T -	R
Control:	Permitted			Permitted			Permitted			Permitted		
Rights:	Include			Include			Include			Include		
Min. Green:	7	7	7	7	7	7	7	7	7	7	7	7
Lanes:	0 0	1! 0	0	0 0	1! 0	0	1 0	1 1	0	1 0	1 1	0
Volume Module:												
Base Vol:	67	62	5	15	4	25	81	661	41	1	908	71
Growth Adj:	1.00	1.00	1.00	1.00	1.00	1.00	1.00	1.00	1.00	1.00	1.00	1.00
Initial Bse:	67	62	5	15	4	25	81	661	41	1	908	71
Added Vol:	0	0	0	0	0	0	0	0	0	0	0	0
PasserByVol:	0	0	0	0	0	0	0	0	0	0	0	0
Initial Fut:	67	62	5	15	4	25	81	661	41	1	908	71
User Adj:	1.00	1.00	1.00	1.00	1.00	1.00	1.00	1.00	1.00	1.00	1.00	1.00
PHF Adj:	1.00	1.00	1.00	1.00	1.00	1.00	1.00	1.00	1.00	1.00	1.00	1.00
PHF Volume:	67	62	5	15	4	25	81	661	41	1	908	71
Reduct Vol:	0	0	0	0	0	0	0	0	0	0	0	0
Reduced Vol:	67	62	5	15	4	25	81	661	41	1	908	71
PCE Adj:	1.00	1.00	1.00	1.00	1.00	1.00	1.00	1.00	1.00	1.00	1.00	1.00
MLF Adj:	1.00	1.00	1.00	1.00	1.00	1.00	1.00	1.00	1.00	1.00	1.00	1.00
FinalVolume:	67	62	5	15	4	25	81	661	41	1	908	71
Saturation Flow Module:												
Sat/Lane:	1900	1900	1900	1900	1900	1900	1900	1900	1900	1900	1900	1900
Adjustment:	0.82	0.82	0.82	0.83	0.83	0.83	0.26	0.94	0.94	0.36	0.94	0.94
Lanes:	0.50	0.46	0.04	0.34	0.09	0.57	1.00	1.88	0.12	1.00	1.85	0.15
Final Sat.:	784	725	58	539	144	899	494	3369	209	680	3311	259
Capacity Analysis Module:												
Vol/Sat:	0.09	0.09	0.09	0.03	0.03	0.03	0.16	0.20	0.20	0.00	0.27	0.27
Crit Moves:		****									****	
Green/Cycle:	0.22	0.22	0.22	0.22	0.22	0.22	0.70	0.70	0.70	0.70	0.70	0.70
Volume/Cap:	0.39	0.39	0.39	0.13	0.13	0.13	0.23	0.28	0.28	0.00	0.39	0.39
Delay/Veh:	34.1	34.1	34.1	31.6	31.6	31.6	5.7	5.6	5.6	4.5	6.2	6.2
User DelAdj:	1.00	1.00	1.00	1.00	1.00	1.00	1.00	1.00	1.00	1.00	1.00	1.00
AdjDel/Veh:	34.1	34.1	34.1	31.6	31.6	31.6	5.7	5.6	5.6	4.5	6.2	6.2
LOS by Move:	C	C	C	C	C	C	A	A	A	A	A	A
HCM2kAvgQ:	4	4	4	1	1	1	1	4	4	0	7	7

Note: Queue reported is the number of cars per lane.

Traffix 7.9.0415 (c) 2007 Dowling Assoc. Licensed to MMA, LONG BEACH, CA

Overlook Parkway Extension
Future Alt A
AM Peak Hour

Level Of Service Computation Report
2000 HCM Operations Method (Future Volume Alternative)

Intersection #28 Orozco Dr/Overlook Pkwy

Cycle (sec):	100	Critical Vol./Cap.(X):	0.352
Loss Time (sec):	8 (Y+R=4.0 sec)	Average Delay (sec/veh):	3.2
Optimal Cycle:	25	Level Of Service:	A

Street Name:	Orozco Dr						Overlook Pkwy					
Approach:	North Bound			South Bound			East Bound			West Bound		
Movement:	L - T - R			L - T - R			L - T - R			L - T - R		
Control:	Permitted			Permitted			Permitted			Permitted		
Rights:	Include			Include			Include			Include		
Min. Green:	7	7	7	7	7	7	7	7	7	7	7	7
Lanes:	0 0	1! 0	0	0 0	1! 0	0	1 0	1 1	0	1 0	1 1	0
Volume Module:												
Base Vol:	7	4	3	37	2	2	28	639	4	3	891	149
Growth Adj:	1.00	1.00	1.00	1.00	1.00	1.00	1.00	1.00	1.00	1.00	1.00	1.00
Initial Bse:	7	4	3	37	2	2	28	639	4	3	891	149
Added Vol:	0	0	0	0	0	0	0	0	0	0	0	0
PasserByVol:	0	0	0	0	0	0	0	0	0	0	0	0
Initial Fut:	7	4	3	37	2	2	28	639	4	3	891	149
User Adj:	1.00	1.00	1.00	1.00	1.00	1.00	1.00	1.00	1.00	1.00	1.00	1.00
PHF Adj:	1.00	1.00	1.00	1.00	1.00	1.00	1.00	1.00	1.00	1.00	1.00	1.00
PHF Volume:	7	4	3	37	2	2	28	639	4	3	891	149
Reduct Vol:	0	0	0	0	0	0	0	0	0	0	0	0
Reduced Vol:	7	4	3	37	2	2	28	639	4	3	891	149
PCE Adj:	1.00	1.00	1.00	1.00	1.00	1.00	1.00	1.00	1.00	1.00	1.00	1.00
MLF Adj:	1.00	1.00	1.00	1.00	1.00	1.00	1.00	1.00	1.00	1.00	1.00	1.00
FinalVolume:	7	4	3	37	2	2	28	639	4	3	891	149
Saturation Flow Module:												
Sat/Lane:	1900	1900	1900	1900	1900	1900	1900	1900	1900	1900	1900	1900
Adjustment:	0.84	0.84	0.84	0.72	0.72	0.72	0.27	0.95	0.95	0.40	0.93	0.93
Lanes:	0.50	0.29	0.21	0.90	0.05	0.05	1.00	1.99	0.01	1.00	1.71	0.29
Final Sat.:	795	454	341	1234	67	67	504	3584	22	762	3028	506
Capacity Analysis Module:												
Vol/Sat:	0.01	0.01	0.01	0.03	0.03	0.03	0.06	0.18	0.18	0.00	0.29	0.29
Crit Moves:					****						****	
Green/Cycle:	0.09	0.09	0.09	0.09	0.09	0.09	0.83	0.83	0.83	0.83	0.83	0.83
Volume/Cap:	0.10	0.10	0.10	0.35	0.35	0.35	0.07	0.21	0.21	0.00	0.35	0.35
Delay/Veh:	42.6	42.6	42.6	45.0	45.0	45.0	1.5	1.7	1.7	1.4	2.0	2.0
User DelAdj:	1.00	1.00	1.00	1.00	1.00	1.00	1.00	1.00	1.00	1.00	1.00	1.00
AdjDel/Veh:	42.6	42.6	42.6	45.0	45.0	45.0	1.5	1.7	1.7	1.4	2.0	2.0
LOS by Move:	D	D	D	D	D	D	A	A	A	A	A	A
HCM2kAvgQ:	0	0	0	2	2	2	0	2	2	0	4	4

Note: Queue reported is the number of cars per lane.

Traffix 7.9.0415 (c) 2007 Dowling Assoc. Licensed to MMA, LONG BEACH, CA

Overlook Parkway Extension
Future Alt A
PM Peak Hour

Level Of Service Computation Report
2000 HCM Operations Method (Future Volume Alternative)

Intersection #4 Madison St/Lincoln Ave

Cycle (sec):	100	Critical Vol./Cap.(X):	0.929
Loss Time (sec):	16 (Y+R=4.0 sec)	Average Delay (sec/veh):	51.6
Optimal Cycle:	129	Level Of Service:	D

Street Name:	Madison St						Lincoln Ave					
Approach:	North Bound			South Bound			East Bound			West Bound		
Movement:	L - T - R			L - T - R			L - T - R			L - T - R		
Control:	Protected			Protected			Protected			Protected		
Rights:	Include			Include			Include			Include		
Min. Green:	7	7	7	7	7	7	7	7	7	7	7	7
Lanes:	1 0	1 1	0	1 0	2 0	1	1 0	0 1	0	1 0	1 1	0
Volume Module:												
Base Vol:	220	849	21	33	1194	150	190	262	288	24	208	34
Growth Adj:	1.00	1.00	1.00	1.00	1.00	1.00	1.00	1.00	1.00	1.00	1.00	1.00
Initial Bse:	220	849	21	33	1194	150	190	262	288	24	208	34
Added Vol:	0	0	0	0	0	0	0	0	0	0	0	0
PasserByVol:	0	0	0	0	0	0	0	0	0	0	0	0
Initial Fut:	220	849	21	33	1194	150	190	262	288	24	208	34
User Adj:	1.00	1.00	1.00	1.00	1.00	1.00	1.00	1.00	1.00	1.00	1.00	1.00
PHF Adj:	1.00	1.00	1.00	1.00	1.00	1.00	1.00	1.00	1.00	1.00	1.00	1.00
PHF Volume:	220	849	21	33	1194	150	190	262	288	24	208	34
Reduct Vol:	0	0	0	0	0	0	0	0	0	0	0	0
Reduced Vol:	220	849	21	33	1194	150	190	262	288	24	208	34
PCE Adj:	1.00	1.00	1.00	1.00	1.00	1.00	1.00	1.00	1.00	1.00	1.00	1.00
MLF Adj:	1.00	1.00	1.00	1.00	1.00	1.00	1.00	1.00	1.00	1.00	1.00	1.00
FinalVolume:	220	849	21	33	1194	150	190	262	288	24	208	34
Saturation Flow Module:												
Sat/Lane:	1900	1900	1900	1900	1900	1900	1900	1900	1900	1900	1900	1900
Adjustment:	0.95	0.95	0.95	0.95	0.95	0.85	0.95	0.92	0.92	0.95	0.93	0.93
Lanes:	1.00	1.95	0.05	1.00	2.00	1.00	1.00	0.48	0.52	1.00	1.72	0.28
Final Sat.:	1805	3509	87	1805	3610	1615	1805	834	916	1805	3038	497
Capacity Analysis Module:												
Vol/Sat:	0.12	0.24	0.24	0.02	0.33	0.09	0.11	0.31	0.31	0.01	0.07	0.07
Crit Moves:	****				****			****		****		
Green/Cycle:	0.12	0.35	0.35	0.10	0.33	0.33	0.23	0.32	0.32	0.07	0.15	0.15
Volume/Cap:	1.00	0.69	0.69	0.18	1.00	0.28	0.45	1.00	1.00	0.19	0.44	0.44
Delay/Veh:	103.2	29.3	29.3	41.5	58.3	24.9	33.8	71.4	71.4	44.6	39.0	39.0
User DelAdj:	1.00	1.00	1.00	1.00	1.00	1.00	1.00	1.00	1.00	1.00	1.00	1.00
AdjDel/Veh:	103.2	29.3	29.3	41.5	58.3	24.9	33.8	71.4	71.4	44.6	39.0	39.0
LOS by Move:	F	C	C	D	E	C	C	E	E	D	D	D
HCM2kAvgQ:	11	13	13	1	26	3	5	23	23	1	4	4

Note: Queue reported is the number of cars per lane.

Traffix 7.9.0415 (c) 2007 Dowling Assoc. Licensed to MMA, LONG BEACH, CA

Overlook Parkway Extension
Future Alt A
PM Peak Hour

Level Of Service Computation Report
2000 HCM Operations Method (Future Volume Alternative)

Intersection #5 Madison St/Victoria Ave

Cycle (sec):	100	Critical Vol./Cap.(X):	1.145
Loss Time (sec):	16 (Y+R=4.0 sec)	Average Delay (sec/veh):	124.2
Optimal Cycle:	130	Level Of Service:	F

Street Name:	Madison St								Victoria Ave					
Approach:	North Bound			South Bound			East Bound			West Bound				
Movement:	L	- T	- R	L	- T	- R	L	- T	- R	L	- T	- R		
Control:	Split Phase			Split Phase			Split Phase			Split Phase				
Rights:	Include			Include			Ovl			Ovl				
Min. Green:	7	7	7	7	7	7	7	7	7	7	7	7		
Lanes:	0	1 0	1 0	0	1 0	1 0	0	1 0	0 1	0	1 0	0 1		
Volume Module:														
Base Vol:	264	1026	71	58	1457	62	75	117	288	12	53	17		
Growth Adj:	1.00	1.00	1.00	1.00	1.00	1.00	1.00	1.00	1.00	1.00	1.00	1.00		
Initial Bse:	264	1026	71	58	1457	62	75	117	288	12	53	17		
Added Vol:	0	0	0	0	0	0	0	0	0	0	0	0		
PasserByVol:	0	0	0	0	0	0	0	0	0	0	0	0		
Initial Fut:	264	1026	71	58	1457	62	75	117	288	12	53	17		
User Adj:	1.00	1.00	1.00	1.00	1.00	1.00	1.00	1.00	1.00	1.00	1.00	1.00		
PHF Adj:	1.00	1.00	1.00	1.00	1.00	1.00	1.00	1.00	1.00	1.00	1.00	1.00		
PHF Volume:	264	1026	71	58	1457	62	75	117	288	12	53	17		
Reduct Vol:	0	0	0	0	0	0	0	0	0	0	0	0		
Reduced Vol:	264	1026	71	58	1457	62	75	117	288	12	53	17		
PCE Adj:	1.00	1.00	1.00	1.00	1.00	1.00	1.00	1.00	1.00	1.00	1.00	1.00		
MLF Adj:	1.00	1.00	1.00	1.00	1.00	1.00	1.00	1.00	1.00	1.00	1.00	1.00		
FinalVolume:	264	1026	71	58	1457	62	75	117	288	12	53	17		
Saturation Flow Module:														
Sat/Lane:	1900	1900	1900	1900	1900	1900	1900	1900	1900	1900	1900	1900		
Adjustment:	0.93	0.93	0.93	0.94	0.94	0.94	0.98	0.98	0.85	0.99	0.99	0.85		
Lanes:	0.39	1.51	0.10	0.07	1.85	0.08	0.39	0.61	1.00	0.18	0.82	1.00		
Final Sat.:	688	2673	185	132	3309	141	728	1136	1615	348	1535	1615		
Capacity Analysis Module:														
Vol/Sat:	0.38	0.38	0.38	0.44	0.44	0.44	0.10	0.10	0.18	0.03	0.03	0.01		
Crit Moves:			****			****		****			****			
Green/Cycle:	0.32	0.32	0.32	0.37	0.37	0.37	0.09	0.09	0.40	0.07	0.07	0.44		
Volume/Cap:	1.20	1.20	1.20	1.20	1.20	1.20	1.20	1.20	0.44	0.49	0.49	0.02		
Delay/Veh:	134.6	135	134.6	131.1	131	131.1	182.4	182	22.1	47.7	47.7	16.1		
User DelAdj:	1.00	1.00	1.00	1.00	1.00	1.00	1.00	1.00	1.00	1.00	1.00	1.00		
AdjDel/Veh:	134.6	135	134.6	131.1	131	131.1	182.4	182	22.1	47.7	47.7	16.1		
LOS by Move:	F	F	F	F	F	F	F	F	C	D	D	B		
HCM2kAvgQ:	40	40	40	45	45	45	13	13	7	3	3	0		

Note: Queue reported is the number of cars per lane.

Traffix 7.9.0415 (c) 2007 Dowling Assoc. Licensed to MMA, LONG BEACH, CA

Overlook Parkway Extension
Future Alt A
PM Peak Hour

Level Of Service Computation Report
2000 HCM Operations Method (Future Volume Alternative)

Intersection #9 Washington St/Overlook Pkwy

Cycle (sec):	100	Critical Vol./Cap.(X):	0.863
Loss Time (sec):	12 (Y+R=4.0 sec)	Average Delay (sec/veh):	26.0
Optimal Cycle:	95	Level Of Service:	C

Street Name:	Washington St								Overlook Pkwy					
Approach:	North Bound			South Bound			East Bound			West Bound				
Movement:	L	- T	- R	L	- T	- R	L	- T	- R	L	- T	- R		
Control:	Protected			Protected			Protected			Protected				
Rights:	Include			Include			Include			Ovl				
Min. Green:	7	7	7	7	7	7	7	7	7	7	7	7		
Lanes:	0	0 1	1 0	2	0 2	0 0	0	0 0	0 0	1	0 0	0 2		
Volume Module:														
Base Vol:	0	1231	108	1111	1632	0	0	0	0	104	0	1092		
Growth Adj:	1.00	1.00	1.00	1.00	1.00	1.00	1.00	1.00	1.00	1.00	1.00	1.00		
Initial Bse:	0	1231	108	1111	1632	0	0	0	0	104	0	1092		
Added Vol:	0	0	0	0	0	0	0	0	0	0	0	0		
PasserByVol:	0	0	0	0	0	0	0	0	0	0	0	0		
Initial Fut:	0	1231	108	1111	1632	0	0	0	0	104	0	1092		
User Adj:	1.00	1.00	1.00	1.00	1.00	1.00	1.00	1.00	1.00	1.00	1.00	1.00		
PHF Adj:	1.00	1.00	1.00	1.00	1.00	1.00	1.00	1.00	1.00	1.00	1.00	1.00		
PHF Volume:	0	1231	108	1111	1632	0	0	0	0	104	0	1092		
Reduct Vol:	0	0	0	0	0	0	0	0	0	0	0	0		
Reduced Vol:	0	1231	108	1111	1632	0	0	0	0	104	0	1092		
PCE Adj:	1.00	1.00	1.00	1.00	1.00	1.00	1.00	1.00	1.00	1.00	1.00	1.00		
MLF Adj:	1.00	1.00	1.00	1.00	1.00	1.00	1.00	1.00	1.00	1.00	1.00	1.00		
FinalVolume:	0	1231	108	1111	1632	0	0	0	0	104	0	1092		
Saturation Flow Module:														
Sat/Lane:	1900	1900	1900	1900	1900	1900	1900	1900	1900	1900	1900	1900		
Adjustment:	1.00	0.94	0.94	0.92	0.95	1.00	1.00	1.00	1.00	0.95	1.00	0.75		
Lanes:	0.00	1.84	0.16	2.00	2.00	0.00	0.00	0.00	0.00	1.00	0.00	2.00		
Final Sat.:	0	3279	288	3502	3610	0	0	0	0	1805	0	2842		
Capacity Analysis Module:														
Vol/Sat:	0.00	0.38	0.38	0.32	0.45	0.00	0.00	0.00	0.00	0.06	0.00	0.38		
Crit Moves:		****		****								****		
Green/Cycle:	0.00	0.43	0.43	0.37	0.69	0.00	0.00	0.00	0.00	0.07	0.00	0.45		
Volume/Cap:	0.00	0.86	0.86	0.86	0.65	0.00	0.00	0.00	0.00	0.78	0.00	0.86		
Delay/Veh:	0.0	30.8	30.8	35.5	9.1	0.0	0.0	0.0	0.0	70.7	0.0	31.4		
User DelAdj:	1.00	1.00	1.00	1.00	1.00	1.00	1.00	1.00	1.00	1.00	1.00	1.00		
AdjDel/Veh:	0.0	30.8	30.8	35.5	9.1	0.0	0.0	0.0	0.0	70.7	0.0	31.4		
LOS by Move:	A	C	C	D	A	A	A	A	A	E	A	C		
HCM2kAvgQ:	0	22	22	19	15	0	0	0	0	5	0	20		

Note: Queue reported is the number of cars per lane.

Traffix 7.9.0415 (c) 2007 Dowling Assoc. Licensed to MMA, LONG BEACH, CA

Overlook Parkway Extension
Future Alt A
PM Peak Hour

Level Of Service Computation Report
2000 HCM Operations Method (Future Volume Alternative)

Intersection #16 Crystal View Ter/Overlook Pkwy

Cycle (sec):	100	Critical Vol./Cap.(X):	0.441
Loss Time (sec):	8 (Y+R=4.0 sec)	Average Delay (sec/veh):	3.2
Optimal Cycle:	29	Level Of Service:	A

Street Name:	Crystal View Ter						Overlook Pkwy					
Approach:	North Bound			South Bound			East Bound			West Bound		
Movement:	L -	T -	R	L -	T -	R	L -	T -	R	L -	T -	R
Control:	Permitted			Permitted			Permitted			Permitted		
Rights:	Include			Include			Include			Include		
Min. Green:	7	7	7	7	7	7	7	7	7	7	7	7
Lanes:	0 0	1! 0	0	0 0	1 0	0	1 0	1 1	0	1 0	1 1	0
Volume Module:												
Base Vol:	42	0	13	0	2	0	1	1020	261	17	1163	0
Growth Adj:	1.00	1.00	1.00	1.00	1.00	1.00	1.00	1.00	1.00	1.00	1.00	1.00
Initial Bse:	42	0	13	0	2	0	1	1020	261	17	1163	0
Added Vol:	0	0	0	0	0	0	0	0	0	0	0	0
PasserByVol:	0	0	0	0	0	0	0	0	0	0	0	0
Initial Fut:	42	0	13	0	2	0	1	1020	261	17	1163	0
User Adj:	1.00	1.00	1.00	1.00	1.00	1.00	1.00	1.00	1.00	1.00	1.00	1.00
PHF Adj:	1.00	1.00	1.00	1.00	1.00	1.00	1.00	1.00	1.00	1.00	1.00	1.00
PHF Volume:	42	0	13	0	2	0	1	1020	261	17	1163	0
Reduct Vol:	0	0	0	0	0	0	0	0	0	0	0	0
Reduced Vol:	42	0	13	0	2	0	1	1020	261	17	1163	0
PCE Adj:	1.00	1.00	1.00	1.00	1.00	1.00	1.00	1.00	1.00	1.00	1.00	1.00
MLF Adj:	1.00	1.00	1.00	1.00	1.00	1.00	1.00	1.00	1.00	1.00	1.00	1.00
FinalVolume:	42	0	13	0	2	0	1	1020	261	17	1163	0
Saturation Flow Module:												
Sat/Lane:	1900	1900	1900	1900	1900	1900	1900	1900	1900	1900	1900	1900
Adjustment:	0.74	1.00	0.74	1.00	1.00	1.00	0.23	0.92	0.92	0.20	0.95	0.95
Lanes:	0.76	0.00	0.24	0.00	1.00	0.00	1.00	1.59	0.41	1.00	2.00	0.00
Final Sat.:	1074	0	333	0	1900	0	437	2785	713	382	3610	0
Capacity Analysis Module:												
Vol/Sat:	0.04	0.00	0.04	0.00	0.00	0.00	0.00	0.37	0.37	0.04	0.32	0.00
Crit Moves:	****							****				
Green/Cycle:	0.09	0.00	0.09	0.00	0.09	0.00	0.83	0.83	0.83	0.83	0.83	0.00
Volume/Cap:	0.44	0.00	0.44	0.00	0.01	0.00	0.00	0.44	0.44	0.05	0.39	0.00
Delay/Veh:	45.7	0.0	45.7	0.0	41.6	0.0	1.4	2.4	2.4	1.6	2.2	0.0
User DelAdj:	1.00	1.00	1.00	1.00	1.00	1.00	1.00	1.00	1.00	1.00	1.00	1.00
AdjDel/Veh:	45.7	0.0	45.7	0.0	41.6	0.0	1.4	2.4	2.4	1.6	2.2	0.0
LOS by Move:	D	A	D	A	D	A	A	A	A	A	A	A
HCM2kAvgQ:	2	0	2	0	0	0	0	6	6	0	5	0

Note: Queue reported is the number of cars per lane.

Traffix 7.9.0415 (c) 2007 Dowling Assoc. Licensed to MMA, LONG BEACH, CA

Overlook Parkway Extension
Future Alt A
PM Peak Hour

Level Of Service Computation Report
2000 HCM Operations Method (Future Volume Alternative)

Intersection #17 Kingdom Dr/Overlook Pkwy

Cycle (sec):	100	Critical Vol./Cap.(X):	0.682
Loss Time (sec):	8 (Y+R=4.0 sec)	Average Delay (sec/veh):	8.2
Optimal Cycle:	46	Level Of Service:	A

Street Name:	Kingdom Dr						Overlook Pkwy					
Approach:	North Bound			South Bound			East Bound			West Bound		
Movement:	L -	T -	R	L -	T -	R	L -	T -	R	L -	T -	R
Control:	Permitted			Permitted			Permitted			Permitted		
Rights:	Include			Include			Include			Include		
Min. Green:	7	7	7	7	7	7	7	7	7	7	7	7
Lanes:	0 0	1! 0	0	1 0	0 0	0	1 0	1 1	0	1 0	1 1	0
Volume Module:												
Base Vol:	69	0	107	4	0	0	0	1194	133	169	1001	5
Growth Adj:	1.00	1.00	1.00	1.00	1.00	1.00	1.00	1.00	1.00	1.00	1.00	1.00
Initial Bse:	69	0	107	4	0	0	0	1194	133	169	1001	5
Added Vol:	0	0	0	0	0	0	0	0	0	0	0	0
PasserByVol:	0	0	0	0	0	0	0	0	0	0	0	0
Initial Fut:	69	0	107	4	0	0	0	1194	133	169	1001	5
User Adj:	1.00	1.00	1.00	1.00	1.00	1.00	1.00	1.00	1.00	1.00	1.00	1.00
PHF Adj:	1.00	1.00	1.00	1.00	1.00	1.00	1.00	1.00	1.00	1.00	1.00	1.00
PHF Volume:	69	0	107	4	0	0	0	1194	133	169	1001	5
Reduct Vol:	0	0	0	0	0	0	0	0	0	0	0	0
Reduced Vol:	69	0	107	4	0	0	0	1194	133	169	1001	5
PCE Adj:	1.00	1.00	1.00	1.00	1.00	1.00	1.00	1.00	1.00	1.00	1.00	1.00
MLF Adj:	1.00	1.00	1.00	1.00	1.00	1.00	1.00	1.00	1.00	1.00	1.00	1.00
FinalVolume:	69	0	107	4	0	0	0	1194	133	169	1001	5
Saturation Flow Module:												
Sat/Lane:	1900	1900	1900	1900	1900	1900	1900	1900	1900	1900	1900	1900
Adjustment:	0.80	1.00	0.80	0.85	1.00	1.00	1.00	0.94	0.94	0.17	0.95	0.95
Lanes:	0.39	0.00	0.61	1.00	0.00	0.00	1.00	1.80	0.20	1.00	1.99	0.01
Final Sat.:	595	0	923	1606	0	0	1900	3199	356	331	3588	18
Capacity Analysis Module:												
Vol/Sat:	0.12	0.00	0.12	0.00	0.00	0.00	0.00	0.37	0.37	0.51	0.28	0.28
Crit Moves:	****									****		
Green/Cycle:	0.17	0.00	0.17	0.17	0.00	0.00	0.00	0.75	0.75	0.75	0.75	0.75
Volume/Cap:	0.68	0.00	0.68	0.01	0.00	0.00	0.00	0.50	0.50	0.68	0.37	0.37
Delay/Veh:	46.2	0.0	46.2	34.5	0.0	0.0	0.0	5.1	5.1	13.9	4.4	4.4
User DelAdj:	1.00	1.00	1.00	1.00	1.00	1.00	1.00	1.00	1.00	1.00	1.00	1.00
AdjDel/Veh:	46.2	0.0	46.2	34.5	0.0	0.0	0.0	5.1	5.1	13.9	4.4	4.4
LOS by Move:	D	A	D	C	A	A	A	A	A	B	A	A
HCM2kAvgQ:	6	0	6	0	0	0	0	9	9	4	6	6

Note: Queue reported is the number of cars per lane.

Traffix 7.9.0415 (c) 2007 Dowling Assoc. Licensed to MMA, LONG BEACH, CA

Overlook Parkway Extension
Future Alt A
PM Peak Hour

Level Of Service Computation Report
2000 HCM Operations Method (Future Volume Alternative)

Intersection #24 Hawarden Dr/Overlook Pkwy

Cycle (sec): 100 | Critical Vol./Cap.(X): 0.563
Loss Time (sec): 8 (Y+R=4.0 sec) | Average Delay (sec/veh): 16.9
Optimal Cycle: 36 | Level Of Service: B

Street Name:	Hawarden Dr						Overlook Pkwy					
Approach:	North Bound			South Bound			East Bound			West Bound		
Movement:	L -	T -	R	L -	T -	R	L -	T -	R	L -	T -	R
Control:	Permitted			Permitted			Permitted			Permitted		
Rights:	Include			Include			Include			Include		
Min. Green:	7	7	7	7	7	7	7	7	7	7	7	7
Lanes:	0 0	1! 0	0	0 0	1! 0	0	1 0	1 1	0	1 0	1 1	0
Volume Module:												
Base Vol:	45	6	5	105	40	186	39	1039	49	2	1022	28
Growth Adj:	1.00	1.00	1.00	1.00	1.00	1.00	1.00	1.00	1.00	1.00	1.00	1.00
Initial Bse:	45	6	5	105	40	186	39	1039	49	2	1022	28
Added Vol:	0	0	0	0	0	0	0	0	0	0	0	0
PasserByVol:	0	0	0	0	0	0	0	0	0	0	0	0
Initial Fut:	45	6	5	105	40	186	39	1039	49	2	1022	28
User Adj:	1.00	1.00	1.00	1.00	1.00	1.00	1.00	1.00	1.00	1.00	1.00	1.00
PHF Adj:	1.00	1.00	1.00	1.00	1.00	1.00	1.00	1.00	1.00	1.00	1.00	1.00
PHF Volume:	45	6	5	105	40	186	39	1039	49	2	1022	28
Reduct Vol:	0	0	0	0	0	0	0	0	0	0	0	0
Reduced Vol:	45	6	5	105	40	186	39	1039	49	2	1022	28
PCE Adj:	1.00	1.00	1.00	1.00	1.00	1.00	1.00	1.00	1.00	1.00	1.00	1.00
MLF Adj:	1.00	1.00	1.00	1.00	1.00	1.00	1.00	1.00	1.00	1.00	1.00	1.00
FinalVolume:	45	6	5	105	40	186	39	1039	49	2	1022	28
Saturation Flow Module:												
Sat/Lane:	1900	1900	1900	1900	1900	1900	1900	1900	1900	1900	1900	1900
Adjustment:	0.69	0.69	0.69	0.81	0.81	0.81	0.19	0.94	0.94	0.18	0.95	0.95
Lanes:	0.80	0.11	0.09	0.32	0.12	0.56	1.00	1.91	0.09	1.00	1.95	0.05
Final Sat.:	1059	141	118	489	186	866	359	3423	161	336	3500	96
Capacity Analysis Module:												
Vol/Sat:	0.04	0.04	0.04	0.21	0.21	0.21	0.11	0.30	0.30	0.01	0.29	0.29
Crit Moves:					****			****				
Green/Cycle:	0.38	0.38	0.38	0.38	0.38	0.38	0.54	0.54	0.54	0.54	0.54	0.54
Volume/Cap:	0.11	0.11	0.11	0.56	0.56	0.56	0.20	0.56	0.56	0.01	0.54	0.54
Delay/Veh:	20.1	20.1	20.1	25.6	25.6	25.6	12.4	15.7	15.7	10.7	15.3	15.3
User DelAdj:	1.00	1.00	1.00	1.00	1.00	1.00	1.00	1.00	1.00	1.00	1.00	1.00
AdjDel/Veh:	20.1	20.1	20.1	25.6	25.6	25.6	12.4	15.7	15.7	10.7	15.3	15.3
LOS by Move:	C	C	C	C	C	C	B	B	B	B	B	B
HCM2kAvgQ:	1	1	1	8	8	8	1	12	12	0	11	11

Note: Queue reported is the number of cars per lane.

Traffix 7.9.0415 (c) 2007 Dowling Assoc. Licensed to MMA, LONG BEACH, CA

Overlook Parkway Extension
Future Alt A
PM Peak Hour

Level Of Service Computation Report
2000 HCM Operations Method (Future Volume Alternative)

Intersection #28 Orozco Dr/Overlook Pkwy

Cycle (sec): 100 | Critical Vol./Cap.(X): 0.530
Loss Time (sec): 8 (Y+R=4.0 sec) | Average Delay (sec/veh): 14.2
Optimal Cycle: 34 | Level Of Service: B

Street Name:	Orozco Dr						Overlook Pkwy					
Approach:	North Bound			South Bound			East Bound			West Bound		
Movement:	L -	T -	R	L -	T -	R	L -	T -	R	L -	T -	R
Control:	Permitted			Permitted			Permitted			Permitted		
Rights:	Include			Include			Include			Include		
Min. Green:	7	7	7	7	7	7	7	7	7	7	7	7
Lanes:	0 0	1! 0	0	0 0	1! 0	0	1 0	1 1	0	1 0	1 1	0
Volume Module:												
Base Vol:	10	1	2	209	8	27	29	1108	10	0	1058	45
Growth Adj:	1.00	1.00	1.00	1.00	1.00	1.00	1.00	1.00	1.00	1.00	1.00	1.00
Initial Bse:	10	1	2	209	8	27	29	1108	10	0	1058	45
Added Vol:	0	0	0	0	0	0	0	0	0	0	0	0
PasserByVol:	0	0	0	0	0	0	0	0	0	0	0	0
Initial Fut:	10	1	2	209	8	27	29	1108	10	0	1058	45
User Adj:	1.00	1.00	1.00	1.00	1.00	1.00	1.00	1.00	1.00	1.00	1.00	1.00
PHF Adj:	1.00	1.00	1.00	1.00	1.00	1.00	1.00	1.00	1.00	1.00	1.00	1.00
PHF Volume:	10	1	2	209	8	27	29	1108	10	0	1058	45
Reduct Vol:	0	0	0	0	0	0	0	0	0	0	0	0
Reduced Vol:	10	1	2	209	8	27	29	1108	10	0	1058	45
PCE Adj:	1.00	1.00	1.00	1.00	1.00	1.00	1.00	1.00	1.00	1.00	1.00	1.00
MLF Adj:	1.00	1.00	1.00	1.00	1.00	1.00	1.00	1.00	1.00	1.00	1.00	1.00
FinalVolume:	10	1	2	209	8	27	29	1108	10	0	1058	45
Saturation Flow Module:												
Sat/Lane:	1900	1900	1900	1900	1900	1900	1900	1900	1900	1900	1900	1900
Adjustment:	0.82	0.82	0.82	0.72	0.72	0.72	0.19	0.95	0.95	1.00	0.94	0.94
Lanes:	0.77	0.08	0.15	0.86	0.03	0.11	1.00	1.98	0.02	1.00	1.92	0.08
Final Sat.:	1195	119	239	1180	45	152	359	3574	32	1900	3442	146
Capacity Analysis Module:												
Vol/Sat:	0.01	0.01	0.01	0.18	0.18	0.18	0.08	0.31	0.31	0.00	0.31	0.31
Crit Moves:					****			****				
Green/Cycle:	0.33	0.33	0.33	0.33	0.33	0.33	0.59	0.59	0.59	0.00	0.59	0.59
Volume/Cap:	0.03	0.03	0.03	0.53	0.53	0.53	0.14	0.53	0.53	0.00	0.53	0.53
Delay/Veh:	22.3	22.3	22.3	28.1	28.1	28.1	9.6	12.7	12.7	0.0	12.7	12.7
User DelAdj:	1.00	1.00	1.00	1.00	1.00	1.00	1.00	1.00	1.00	1.00	1.00	1.00
AdjDel/Veh:	22.3	22.3	22.3	28.1	28.1	28.1	9.6	12.7	12.7	0.0	12.7	12.7
LOS by Move:	C	C	C	C	C	C	A	B	B	A	B	B
HCM2kAvgQ:	0	0	0	7	7	7	1	11	11	0	11	11

Note: Queue reported is the number of cars per lane.

Traffix 7.9.0415 (c) 2007 Dowling Assoc. Licensed to MMA, LONG BEACH, CA