CITY OF RIVERSIDE

FIVE YEAR

CAPITAL IMPROVEMENT PROGRAM

FISCAL YEARS
2026 - 2031







CITY OF RIVERSIDE, CA

CAPITAL IMPROVEMENT PROGRAM

FISCAL YEARS 2026/27 – 2030/31

MAYOR
Patricia Lock Dawson

CITY COUNCIL
Philip Falcone
Ward 1

Clarissa Cervantes
Ward 2

Steven Robillard
Ward 3

Chuck Conder
Ward 4

Sean Mill
Ward 5

Jim Perry
Ward 6

Steve Hemenway
Ward 7

CITY MANAGER
Vacant

Asst City Manager/CFO
Edward Enriquez

PREPARED BY THE CITY BUDGET OFFICE

Finance Director/Asst CFO
Julie Nemes

Deputy Finance Director
Sergio Aguilar

Budget Manager
Peter Kakos

Budget Office Staff
Gabriella Garcia
Nathaniel Gibson
Angel Guo
Mark Reister
Patrick Siritara

This Page Intentionally Left Blank

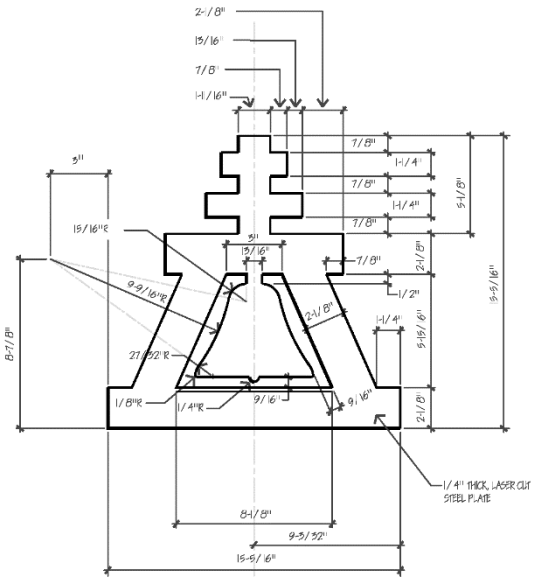



California Society of Municipal Finance Officers

Certificate of Award

Capital Budget Excellence Award
Fiscal Years 2024-2025 & 2025-2026

Presented to the

City of Riverside

For meeting the criteria established to achieve a CSMFO Award in Budgeting.

February 7, 2025

Ernie Reyna
Ernie Reyna
2024 CSMFO President

James Russell-Field
James Russell-Field, Chair
Recognition Committee

Dedicated to Excellence in Municipal Financial Reporting

The California Society of Municipal Finance Officers (CSMFO) presented the Capital Budget Excellence Award to the City of Riverside, CA for the City's Fiscal Year 2024/25 & 2025/26 Capital Budget. The City of Riverside is confident that the City's Fiscal Year 2026-2028 Capital Budget will continue to conform to award requirements. Accordingly, this budget document will be sent to CSMFO.

This Page Intentionally Left Blank

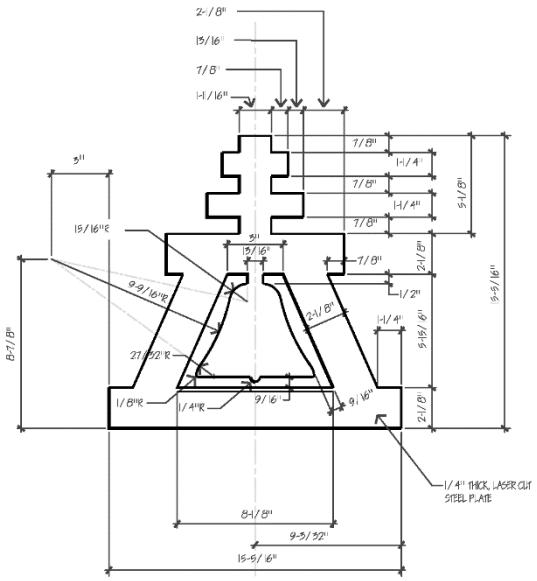

TABLE OF CONTENTS

BUDGET MESSAGE **1**
BUDGET RESOLUTION **5**
GUIDE TO THE CAPITAL IMPROVEMENT PROGRAM **9**
Capital Improvement Program 9
Benefits of the Capital Improvement Program 9
Budget Process 10
Capital Budgeting Policies 11
Generally Accepted Accounting Principles 12
Cost Increases and Future Project Inflation 12
Project Status 12
Project Categories 13
FINANCIAL OVERVIEW **15**
Overview 15
Five-Year Plan Summary Schedules 17
Funded Projects by Ward 18
Funding Sources 19
Unfunded Capital Improvement Projects 21
Capital Improvement Projects by Funding Source 22
Capital Improvement Projects by Project Category 26
Revenue Summary by Fund 30
CAPITAL PROJECTS **31**
Airport 31
Electric 39
Innovation and Technology 81
Municipal Buildings & Facilities 85
Parks, Recreation & Community Services 103
Public Parking 133
Railroad-Related 145
Sewer 152
Storm Drain 195
Transportation 213
Water 269
GLOSSARY **294**
APPENDICES **296**
Appendix A: Schedule of Unfunded Capital Projects 296
Appendix B: Capital Fiscal Policies 306
Appendix C: Planning Commission Action Items 309
Appendix D: List of Acronyms 322
INDEXES **325**
Index I – Projects by Description 325
Index II – Projects by Project Number 331

This Page Intentionally Left Blank

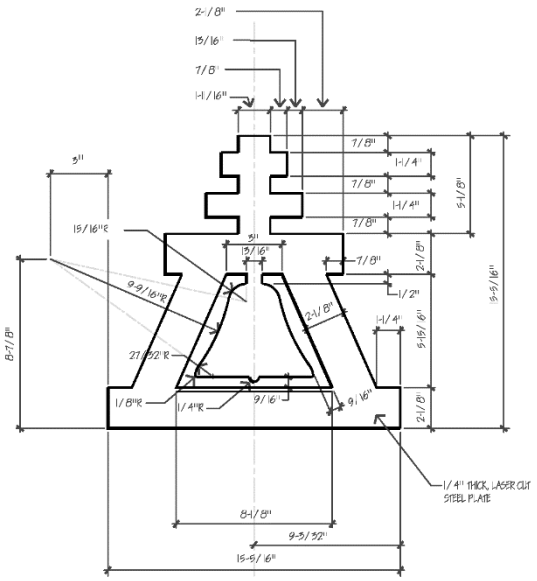



BUDGET MESSAGE

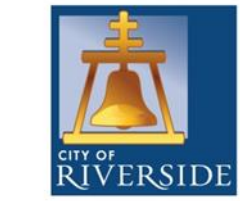

City of Arts & Innovation

Office of the City Manager
Edward Enriquez, Interim City Manager

June 23, 2026

Capital Improvement Program Budget for Fiscal Years 2026/27 and 2027/28 and Five-Year Capital Improvement Plan through Fiscal Year 2030/31

Honorable Mayor and City Council,

I am pleased to present the Riverside Capital Improvement Program (CIP) two-year budget for Fiscal Year (FY) 2026/27 and FY 2027/28, as mandated by Article VI, Section 601 of the City Charter. This document outlines critical infrastructure investments in the comprehensive Five-Year Capital Improvement Plan spanning FYs 2026/27 through 2030/31. This document, along with the City's Budget Transparency Portal[1], outlines a substantial investment of $167.1 million in FY 2026/27 and $161.2 million in FY 2027/28 for essential infrastructure projects. These funds will support 231 active and planned capital projects, with a total budget in the five-year plan of approximately $795 million.

The City's operating and capital budgets are intricately linked. The operating budget serves as the primary financial tool for aligning day-to-day activities and near-term goals with available resources, while also considering long-term objectives. This Five-Year Capital Improvement Plan serves as a vital planning tool that identifies the capital needs, financing, and timing of projects ensuring the responsible and efficient use of resources. It is the cornerstone of the City's financial strategy, aligning capital investments with operational needs and Riverside's long-term vision. By deliberately allocating resources, this plan ensures the City's infrastructure remains robust, resilient, and capable of supporting our community's growth and prosperity.

Consistently maintaining and upgrading public facilities is vital to ensure the long-term sustainability of our infrastructure assets. The CIP budget has been meticulously crafted to prioritize the rehabilitation and modernization of infrastructure and facilities across the City, in direct alignment with the Riverside Book of Work and priorities identified by City Council. The project selection process is rigorously guided by the City's Prioritization of Capital Improvement Projects Fiscal Policy, ensuring that each investment not only aligns with the General Plan but also maximizes the impact of available funding. By objectively weighing critical factors such as public safety, sustainability, economic development, and project readiness, we are optimizing resource allocation to deliver meaningful, lasting benefits that enhance the quality of life for all members of our community.

Multi-year financial planning provides the Mayor, City Council, staff, and the public with valuable insight into the challenges of funding and timing capital projects in a dynamic economic environment, where various factors—such as inflation, labor shortages, fluctuations in material costs, and interest rate changes—can significantly influence project costs. The City is also actively addressing the

[1] https://riverside.openbook.questica.com/

cumulative effects of deferred maintenance on its infrastructure. These projects are funded through a variety of sources, including operating revenues, bond proceeds, grants, fund reserves, and other avenues.

While bond and grant revenues are typically excluded from the budget until formally secured, $50 million in anticipated debt proceeds has been included in the budget for the new Police Headquarters. To maintain financial stability, strict internal controls ensure that capital projects only begin once funding is secured. Measure Z, the voter-approved sales tax, continues to play a key role in supporting City infrastructure needs.

The CIP budget includes increased funding for critical areas requiring enhanced focus and sustainable future solutions over the next five years:

- **The City's Pavement Management Program (PMP):** The PMP maximizes infrastructure investments to ensure the safety, functionality, and longevity of the City's street network through proactive maintenance and data-driven decision-making. The CIP budget includes approximately $53.8 million across various fund sources over the next two years for street paving, which demonstrates a continued investment and commitment in the City's street grid. The City is also actively seeking additional funding sources for street projects, including pursuing grants and partnerships.

- **Sewer and Wastewater Improvement and Maintenance:** The CIP budget allocates $32.2 million toward critical pipe replacements, pump station upgrades, and lift station improvements. These investments ensure strict regulatory compliance and significantly reduce the risk of overflows. By prioritizing these essential infrastructure needs now, the City is protecting public health, safeguarding our environment, and ensuring the long-term reliability and operational safety of the Water Quality Control Plant.

- **Restoring, Improving and Expanding City Parks, Trails and Open Spaces:** The City's CIP budget includes $8.0 million in funding from Measure Z to improve parks, trails and open spaces. This funding will address critical maintenance needs within our parks to enhance their overall quality and functionality for continued public enjoyment.

- **Moving the City through Street Rehabilitation, Pedestrian Access, and Bridge Improvements:** The CIP budget prioritizes pedestrian and cyclist safety, traffic congestion reduction, and overall mobility improvements within the city. The Public Works Department was awarded $1.3 million in TDA Article 3 (SB 821) Bicycle and Pedestrian Facilities Program grant funds for the Van Buren Class II Bike Lanes and Chicago Bike Lanes and Sidewalk projects. Additionally, $13.5 million from Measure Z, Measure A, and Gas Tax funds is allocated for sidewalk repairs, improvements, and the construction of pedestrian ramps and trails. To further reduce traffic congestion, $4.4 million from Measure A will contribute to the replacement and reconstruction of the Market Street and Mission Boulevard Bridges, respectively, with both projects managed by the County of Riverside.

- **City Buildings Deferred Maintenance Project:** $6.5 million from Measure Z is focused on maintaining, repairing, or upgrading major city facilities to extend their useful life, enhance functionality, or meet regulatory standards, projects include fuel tanks, electrical upgrades, and interior refurbishments. The Infrastructure Reserve, funded by General Fund surpluses, has also provided funding for upcoming projects such as the City Hall lobby renovation.

An open and transparent governance is fundamental to building trust with our community. The City's Budget Transparency Portal, in conjunction with this CIP document, provides detailed information about our capital investment strategy. I encourage residents, businesses, and stakeholders to explore this resource to gain a deeper understanding of our financial plans and project priorities. Feedback

and input are welcomed as we work to strengthen our partnership with the community and ensure that our capital investments align with the shared vision for Riverside's future.

Thank you,



Edward Enriquez
Interim City Manager
City of Riverside

This Page Intentionally Left Blank

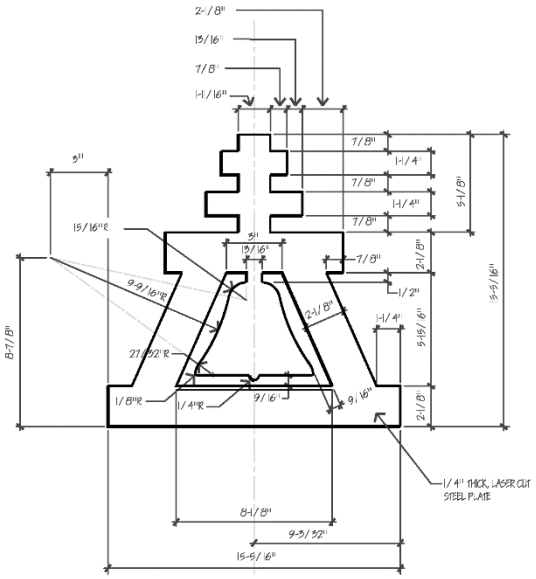



BUDGET RESOLUTION

CITY OF RIVERSIDE

RESOLUTION NO. 24388

A RESOLUTION OF THE CITY COUNCIL OF THE CITY OF RIVERSIDE, CALIFORNIA, ADOPTING THE TWO-YEAR BUDGET OF THE CITY OF RIVERSIDE FOR THE FISCAL YEARS BEGINNING JULY 1, 2026, AND ENDING JUNE 30, 2027, AND BEGINNING JULY 1, 2027, AND ENDING JUNE 30, 2028.

WHEREAS, the proposed two-year budget of the City of Riverside for the Fiscal Years beginning July 1, 2026, and ending June 30, 2027, and beginning July 1, 2027, and ending June 30, 2028, consisting of one volume entitled "Proposed Biennial Budget for Fiscal Years 2026-2027 and 2027-2028", has been prepared and submitted to the City Council for review, consideration, and adoption; and

WHEREAS, the City Council has caused a public hearing to be held on said budget on June 25, 2026, with public notice of the hearing at least 20 days prior to said hearing, has further considered the proposed budget, and has made revisions therein; and

WHEREAS, the City Council has given careful consideration to the adoption of a budget and financial plan for the use of funds for Fiscal Years 2026-2027 and 2027-2028 as set forth in the entitled "Proposed Biennial Budget for Fiscal Years 2026-2027 and 2027-2028" and including any modifications, revisions, and/or corrections made and approved by the City Council, which are incorporated by reference as though fully set forth herein, and together constitute the "Adopted Biennial Budget for Fiscal Years 2026-2027 and 2027-2028"; and

WHEREAS, Section 1103 of the Charter of the City of Riverside requires that the annual budget of the City of Riverside be adopted on or before June 30th,

NOW THEREFORE, BE IT RESOLVED that the City Council hereby finds and determines as follows:

Section 1: That the preceding recitals are true and correct, and are incorporated by reference as though fully set forth herein.

Section 2: The biennial budget of the City of Riverside for Fiscal Years beginning July 1, 2026, and ending June 30, 2027, and beginning July 1, 2027, and ending June 30, 2028, prepared and submitted to the City Council by the City Manager and on file in the office of the City Clerk, as modified and amended by the City Council, is hereby adopted as the biennial budget for Fiscal Years

beginning July 1, 2026, and ending June 30, 2027, and beginning July 1, 2027, and ending June 30, 2028, on the basis of the totals set forth in each of the budgets contained therein by program and/or sub-program within each department, the totals set forth therein for debt redemption and interest requirements, and the totals set forth therein for capital improvements.

Section 3: That the Chief Financial Officer/City Treasurer is authorized to expend in accordance with the laws of the State of California and the laws and Charter of City of Riverside on behalf of the City Council new appropriations for departments, programs, and projects as stated in the "Adopted Biennial Budget for Fiscal Years 2026-2027 and 2027-2028," as shown in Exhibit "A" attached hereto and incorporated herein by reference.

Section 4: That, subject to availability of funds, the Chief Financial Officer/City Treasurer is authorized to make the inter-fund transfers between funds as presented in the aforesaid budget document and as authorized by the City Council in monthly increments of one-twelfth each or such transfers may be made in lump sum amounts if necessary to finance a particular item, project, program or sub-program.

Section 5: That the Chief Financial Officer/City Treasurer is authorized to validate, sign, and pay all legal and contractual obligations of the City, including City Departments and agencies, with check warrants up to the amounts appropriated in this budget.

Section 6: That at the conclusion of fiscal year ending June 30, 2026, certain purchase orders will exist as Outstanding Encumbrances representing contractual obligations of previously budgeted funds. In addition, budgeted funds for certain items or projects in various stages of acquisition or development have previously been approved or will be approved by the City Council to be carried forward to fiscal year 2026-2027 as Continuing Appropriations. The Outstanding Encumbrances and Continuing Appropriations shall be deemed to be rebudgeted as an addition to the budget amounts previously set forth in this resolution.

Section 7: That at the conclusion of fiscal year ending June 30, 2027, certain purchase orders will exist as Outstanding Encumbrances representing contractual obligations of previously budgeted funds. In addition, budgeted funds for certain items or projects in various stages of acquisition or development have previously been approved or will be approved by the City Council to

CITY ATTORNEY'S OFFICE
3750 UNIVERSITY AVE., STE. 250
RIVERSIDE, CA 92501
(951) 826-5567

be carried forward to fiscal year 2027-2028 as Continuing Appropriations. The Outstanding Encumbrances and Continuing Appropriations shall be deemed to be rebudgeted as an addition to the budget amounts previously set forth in this resolution.

Section 8: That the City Council hereby approves the Five-Year Capital Improvement Plan for Fiscal Years 2026-2031, hereby accepts the Planning Commission's determination on May 7, 2026, that the Fiscal Year 2026-2027 and the Fiscal Year 2027-2028 capital projects are consistent with the General Plan of the City of Riverside, and hereby authorizes the Chief Financial Officer/City Treasurer to transfer funding between approved capital projects.

Section 9: That pursuant to Section 1104 of the Charter of the City of Riverside, the City Council may during the fiscal year amend or supplement the budget by motion adopted by the affirmative votes of at least five members so as to authorize the transfer of unused balances appropriated for one purpose to another purpose or to appropriate available funds not included in the budget.

Section 10: That this Resolution shall become effective immediately upon its passage.

ADOPTED by the City Council this 23rd day of June, 2026.

PATRICIA LOCK DAWSON
Mayor of the City of Riverside

Attest:

DONESIA GAUSE
City Clerk of the City of Riverside

CITY ATTORNEY'S OFFICE
3750 UNIVERSITY AVE., STE. 250
RIVERSIDE, CA 92501
(951) 826-5567

I, Donesia Gause, City Clerk of the City of Riverside, California, hereby certify that the foregoing resolution was duly and regularly adopted at a meeting of the City Council on the 23rd day of June, 2026, by the following vote, to wit:

Ayes: Cervantes, Robillard, Conder, Mill, Perry and Hemenway

Noes: Falcone

Absent:

Abstain:

IN WITNESS WHEREOF, I have hereunto set my hand and affixed the official seal of the City of Riverside, California, this 1st day of July, 2026.

DONESIA GAUSE
City Clerk of the City of Riverside

314042 SBM 05/06/26

CITY ATTORNEY'S OFFICE
3750 UNIVERSITY AVE., STE. 250
RIVERSIDE, CA 92501
(951) 826-5567



GUIDE TO THE CAPITAL IMPROVEMENT PROGRAM

CITY OF RIVERSIDE

CAPITAL IMPROVEMENT PROGRAM

The City of Riverside's Capital Improvement Program (CIP) is a multi-year financial plan for the repair, replacement, and/or construction of municipal facilities and infrastructure. The City's CIP Plan strategically identifies both funded and unfunded capital improvement projects over a period of five years. Following a public hearing on June 23, 2026, the City Council approved a resolution adopting the City of Riverside's Biennial Budget for Fiscal Years 2026/27 and 2027/28 along with the first two-years of the Five-Year Capital Improvement Plan (refer to Budget Resolution, Section 8). Appropriations for fiscal years beyond FY 2027/28 will be included in the next biennial budget cycle for fiscal years 2028/29 & 2029/30.

A capital improvement project is defined as a long-term investment of funds to improve, repair, or replace an existing capital asset and/or construct or acquire a new capital asset. A capital project is a city resource and/or property with a monetary value of at least $20,000 and an initial useful life of at least 10 years.



Riverside Public Utilities Streetlight Replacement

BENEFITS OF THE CAPITAL IMPROVEMENT PROGRAM

As stewards of public trust, staff has an obligation to be good custodians of the City's capital assets by keeping them safe and in optimal working condition. In doing this, the municipal facilities and public infrastructure are fully utilized to provide exemplary services for the maximum benefit to the citizens and the community at large.

The CIP provides the following primary benefits:

- Enhances the safety and health of the citizens by providing the infrastructure for first responders and caregivers that bring aid and care where and when it's most needed;
- Improves the quality of life of the community by providing fair, transparent, and equitable access to services;
- Improves the livability conditions of neighborhoods by providing mobility to attend events and cultural affairs;
- Focuses resources on achieving citywide priorities and meeting citizen expectations;
- Provides a transparent and predictable implementation framework for the General Plan, Specific Plan, and *Book of Work*;
- Fosters inter-departmental coordination of City infrastructure investments; and
- Promotes accountability and provides leverage for the long-term planning and investment of public funds for large-scale public purposes.

Capital improvement projects typically carry considerable future impact because they have an expected life span of 10 years or more. They are often, but not always, financed over a longer period, in effect spreading the cost of the project across generations of users that benefit from the completed project.

BUDGET PROCESS

The City of Riverside's fiscal year begins July 1 and concludes on June 30. In accordance with fundamental democratic principles, the City embraces the notion and practice of citizen participation, especially in key planning and resource allocation activities. Therefore, the development of the budget process begins early in the prior fiscal year to ensure adequate planning and community input into that planning. Engagement with City leadership, commissions, and the community occur throughout the process.

The CIP includes a two-year budget and a five-year financial plan for projects intended to meet the City's current or anticipated capital needs, the funding sources (if available), and the project delivery timeframe. During budget development, capital projects are identified, prioritized, and incorporated into the City's long-range fiscal and strategic plans.

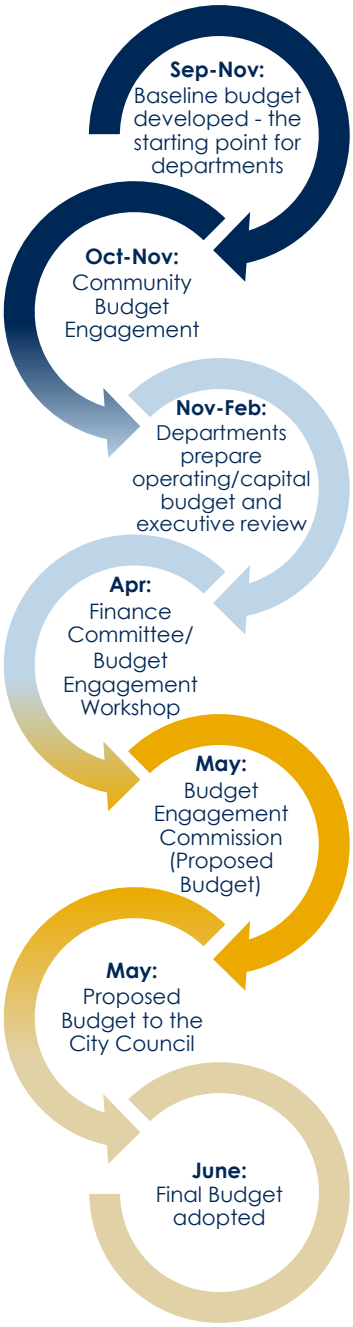

FINANCE DEPARTMENT

The budget process begins in the Finance Department in September, with the preparation of baseline revenue and expenditure assumptions. A comprehensive analysis of past revenue performance, the current economic environment, and other contributing factors is performed to develop revenue projections and determine available resources for the upcoming budget cycle.

CITY DEPARTMENTS

In November, City departments attend a budget kickoff meeting where they receive the budget development calendar and budget directions. During the months of November through December, departments define capital needs in relation to services, programs, and related strategic goals. Departments prioritize funding for capital projects based on the *Prioritization of Capital Projects* fiscal policy. Internal review of department budget submissions takes place in January through February, with executive leadership recommending adjustments and providing guidance on the budget submissions of each City department.

COMMUNITY ENGAGEMENT

Community Engagement begins in October through a series of community budget forums used to gather input from residents and business owners. The City also subsequently released an online survey that polled residents and was designed to measure level of satisfaction with City services and to gain an understanding of what current services and programs the Riverside residents deem least and most important. Community engagement continues in April through May with the presentation of department budgets to their respective boards and commissions, where applicable. In April, the Finance Committee and Budget Engagement Commission (BEC) are presented with a budget workshop for input before the final budget proposal. In May, the proposed budget is presented to the BEC and subsequently to City Council, with their feedback incorporated before adoption in June.

PROPOSED BUDGET SUBMISSION TO CITY COUNCIL

The City Charter requires that the City Manager provide City Council with a written proposed budget at least 35 calendar days before the beginning of each fiscal year (May 26). The Proposed Budget represents the culmination of the preliminary budget presentations to numerous boards, commissions, and community groups, as well as the Council budget workshop, incorporating the feedback received from those events to produce a Proposed Budget. In May, the Proposed Budget and Capital Improvement Program are presented to the City Council. Following a review of the budget, City Council sets a Public Hearing for June and provides public notice at least 20 days before the hearing as required by the City Charter. Copies of the proposed budget are made available for inspection by the public in the City Clerk's Office and on the City's publicly accessible website.

BUDGET ADOPTION BY CITY COUNCIL

As required by the City Charter, City Council will adopt the City's budget no later than June 30 of the fiscal year preceding the budget submitted for approval. The final budget submitted to the City Council will be inclusive of all changes requested by the Council during the presentation of the proposed budget in May. The budget becomes effective July 1.

AMENDING THE CAPITAL IMPROVEMENT PLAN BUDGET

The City Council may amend or supplement the adopted budget with the affirmative vote of at least five members to authorize the transfer of unused balances appropriated to one department or fund to another department or fund or to appropriate available funds not included in the budget. Once approved, appropriations for capital projects are continued for the life of the project (i.e., through continued appropriations). Upon completion or cancelation of a project, unused funds are returned to fund balance/working capital when projects are completed and closed, canceled at the discretion of the City Council, or by a recommendation of the department or project manager in charge of the project.

CAPITAL BUDGETING POLICIES

The City approved two capital policies that established guidelines for the development of the Capital Improvement Program Budget and Plan, and prioritization principles to guide the selection of capital projects to be funded.

MULTI-YEAR CAPITAL PLANNING

On March 20, 2018, the City Council adopted a Multi-year Capital Planning fiscal policy that requires the adoption of a capital plan spanning at least five years in conjunction with the adoption of the City's budget. The policy defines a capital project as an asset or improvement having a monetary cost of at least $20,000 and a useful life of at least ten years.

PRIORITIZATION OF CAPITAL IMPROVEMENT PROJECTS

On March 20, 2018, the City Council adopted a Prioritization of Capital Improvement Projects fiscal policy that describes an objective process of prioritizing capital improvement projects to ensure consistency with the General Plan, and in conjunction with the budget process or otherwise as capital funding becomes available, using the following factors:

1. Risk to health, safety, and environment
2. Regulatory or mandated requirements
3. Asset condition, annual recurring costs, and asset longevity
4. Community investment and economic prosperity
5. Level and quality of service
6. Sustainability and conservation

7. Funding availability
8. Project Readiness
9. Multiple category benefit and bundling opportunities.

Each of the factors is further defined within the policy to facilitate objective prioritization. Projects that satisfy a higher number of prioritization categories will rank higher than those satisfying fewer requirements. This ranking method ensures the City's limited resources are allocated to projects that are most aligned with the City's priorities. Projects that are either fully funded or scheduled to receive funds during the Five-Year Capital Plan are given the highest priority. Projects without an identified funding source within the next five years are listed in order of priority in *Appendix A: Schedule of Unfunded Capital Projects*.

CONFORMANCE WITH THE GENERAL PLAN

The Finance Department, in conjunction with the Community and Economic Development Department's Planning Division, presented all recommended FY 2026-2028 capital projects to the Planning Commission for review (refer to Appendix C: Planning Commission Action Items). The Planning Commission evaluated project consistency with the City's General Plan and project compliance with the California Environmental Quality Act (CEQA). On May 7, 2026, the Planning Commission determined that the FY 2026-2028 CIP is consistent with the City's General Plan and that the planned CIP projects are exempt from CEQA.

The remaining three fiscal years, 2028/29 through 2030/31, reflect staff recommendations to fund priority projects and/or are a continuation of projects that span more than one year. These projects are subject to review and revision each year by the City Council as part of the budget process.

GENERALLY ACCEPTED ACCOUNTING PRINCIPLES

Generally Accepted Accounting Principles (GAAP) are the established framework for financial reporting, providing a consistent standard that ensures transparency, reliability, and comparability across financial documents from multiple agencies. The City of Riverside's capital budget and five-year plan are prepared in accordance with GAAP, supporting accurate accounting, full disclosure, and uniform reporting.

COST INCREASES AND FUTURE PROJECT INFLATION

Total project costs are estimated in current-year dollars, accounting for inflation and other variable factors. Non-recurring projects seek to fund the total estimated project cost in the first year. Most non-recurring projects are initiated with complete funding availability and are bid out to secure prices and minimize inflationary risk. For recurring projects, a fixed annual allocation is typically established due to limited funding availability. The annual allocation is evaluated should costs become out of line with funding availability.

For unfunded projects, cost estimates are updated to current-year dollars by applying inflation adjustments using the Consumer Price Index or relevant construction cost indices. This ensures that the estimates reflect the present value of the project costs, even though the timing of future funding may be uncertain. These updated figures are published in the Unfunded Project listing in Appendix A.

PROJECT STATUS

A project status is provided on all project pages and may contain high-level estimated completion dates of major project milestones, project phases, and/or the entire project. A project status may be written at various stages of the budget development process and, therefore, may contain dates that have passed by the time this document is published. Estimated completion dates are typically only provided for one-time projects that can be closed out once all phases of the project are complete. The construction of a building or a defined stretch of road are examples of one-time projects.

Estimated completion dates for ongoing projects are not provided because they are "category" projects. Ongoing and/or category projects are projects that contain numerous projects of the same type all represented as one, such as sidewalk replacements, asphalt overlay, and electric cable replacements.

PROJECT CATEGORIES

Capital projects are presented in one of the following eleven major project categories:

- **Airport Projects** – Maintain the Airport, improve safety, and comply with Federal Aviation Administration (FAA) standards and regulations.
- **Electric Projects** – Construct or maintain electric utility infrastructure and facilities.
- **Innovation and Technology (IT) Projects** – IT design, security, network management, and technology implementation.
- **Municipal Buildings and Facilities Projects** – General municipal projects and projects not otherwise included in other sections of the CIP, including the new construction of buildings such as police and fire stations, libraries, or major repairs, additions, and alterations of existing assets.
- **Parks, Recreation, & Community Services Projects** – Construct, maintain, and upgrade parks, game courts and fields, community centers, and recreational buildings.
- **Public Parking Projects** – Construct new parking facilities and improve existing facilities.
- **Railroad-Related Projects** – Projects related to railroad grades, crossings, quiet zone improvements, grade separations, and all other projects that are railroad-related.
- **Sewer Projects** – Projects designed to increase system capacity for new users, replace aging or obsolete systems, and meet new regulatory requirements.
- **Storm Drain Projects** – Projects that either eliminate a nuisance flow or provide additional flood protection.
- **Transportation Projects** – Extend and widen streets, street resurfacing, construction of curbs, gutters, center medians, bikeways and pedestrian facilities, right-of-way acquisition, and traffic signal improvements.
- **Water Projects** – Construct or maintain water utility infrastructure and facilities.

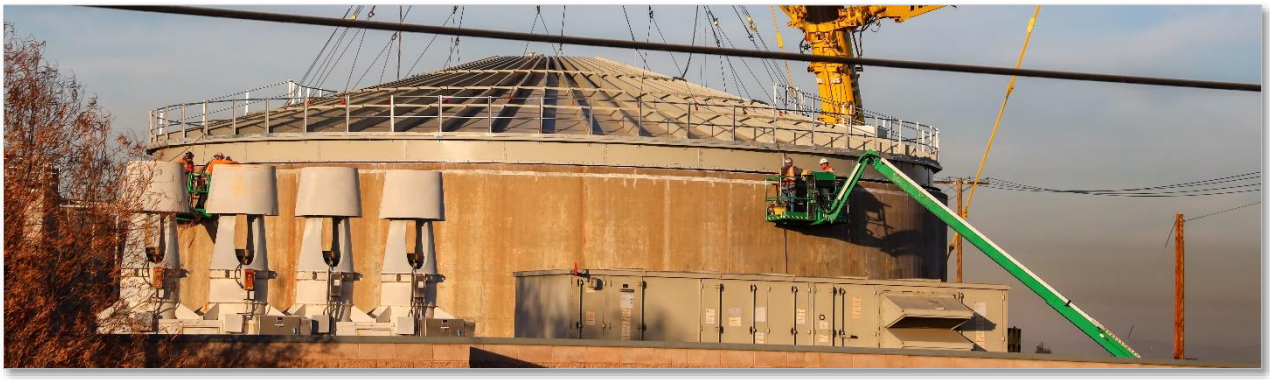

Waste Digester Topper

This Page Intentionally Left Blank

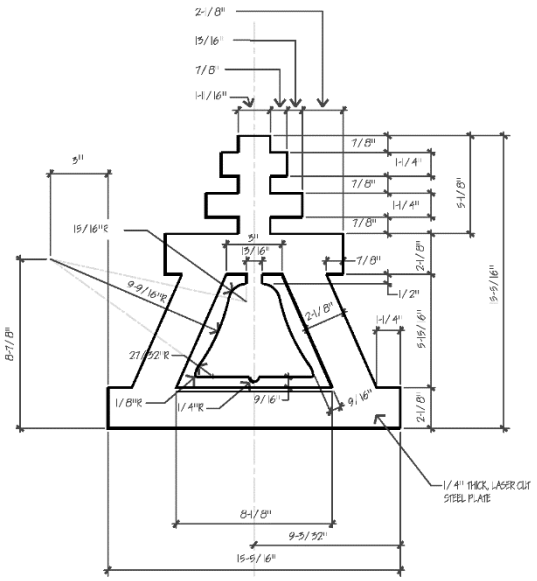



FINANCIAL OVERVIEW

CITY OF RIVERSIDE

OVERVIEW

The Five-Year Capital Improvement Program for Fiscal Years 2026/27 through 2030/31 includes the appropriation of $167.1 million in FY 2026/27, $161.2 million in FY 2027/28 and $467.2 million in planned capital projects for the remaining three years. The CIP currently has approximately $763.4 million in previously appropriated projects that will be continued for a total of nearly $1.6 billion for active and planned projects through FY 2030/31.

Funding for capital projects comes from a variety of funding sources including Measure Z, utility rates, development impact fees, transportation funds, grants, reimbursement agreements, and long-term financing which are restricted for the purposes for which they are budgeted and generally cannot be used for ongoing City operations.

The following is a summary of the Sources and Uses of Funding for the first two years of the plan:

SOURCES	FY 2026/27	FY 2027/28
230 - Special Gas Tax	$ 14,781,232	$ 13,812,623
410 - Storm Drain	100,000	100,000
420 - Measure Z Capital Projects	12,300,000	11,300,000
432 - Measure A Capital Outlay	13,562,300	10,572,800
510 - Electric	79,656,035	75,594,192
520 - Water	45,265,585	37,504,135
550 - Sewer	200,000	10,000,000
570 - Public Parking	1,193,381	2,300,000
TOTAL SOURCES	**$ 167,058,533**	**$ 161,183,750**

FY 2026/27

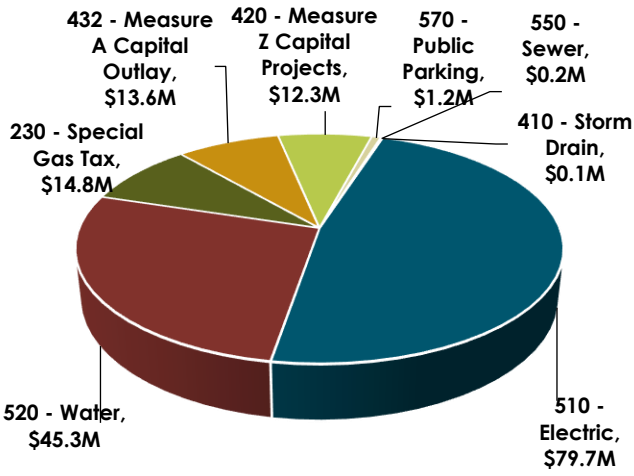

FY 2027/28

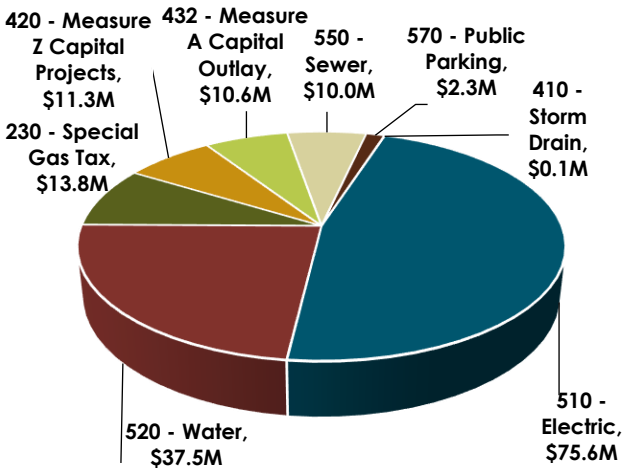

USES	FY 2026/27	FY 2027/28
Electric Utility	$ 79,656,035	$ 75,594,192
Municipal Buildings and Facilities	1,500,000	1,500,000
Parks, Recreation & Community Services	2,000,000	1,500,000
Public Parking	1,183,334	2,300,000
Railroad-Related	827,300	847,800
Sewer	200,000	10,000,000
Storm Drain	2,004,210	565,000
Transportation	34,422,069	31,372,623
Water Utility	45,265,585	37,504,135
Total Uses	**$ 167,058,533**	**$ 161,183,750**

FY 2026/27

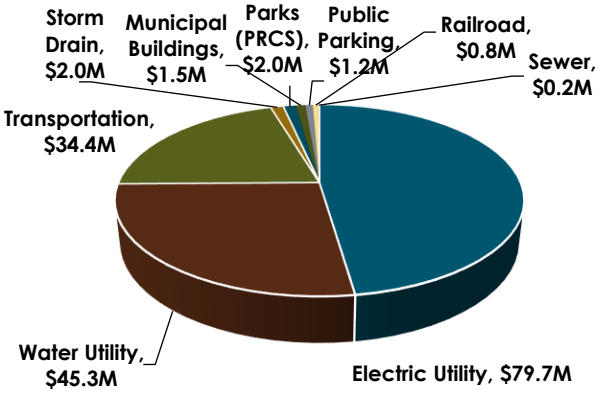

FY 2027/28

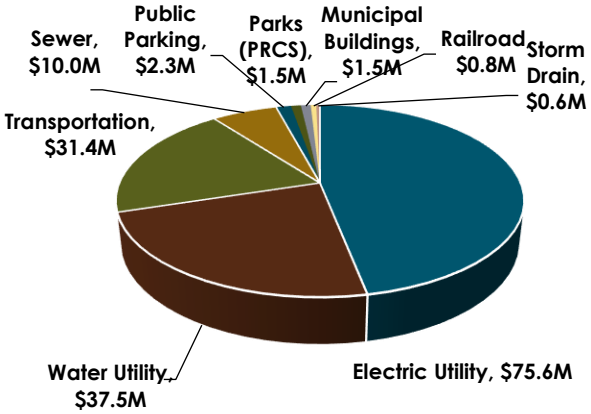



Citywide Park Improvements Project (ARPA Funded)
Harrison Park Playground Reopening

FIVE-YEAR PLAN SUMMARY SCHEDULES

FUNDED PROJECTS BY DEPARTMENT

DEPARTMENT	Adopted FY 2026/27	Adopted FY 2027/28	Projected FY 2028/29	Projected FY 2029/30	Projected FY 2030/31	Department Total
General Services	$ 1,500,000	$ 1,500,000	$ 1,000,000	$ 1,000,000	$ 1,500,000	$ 6,500,000
Parks, Recreation, and Community Services	2,000,000	1,500,000	1,500,000	1,500,000	1,500,000	8,000,000
Public Utilities-Electric	79,656,035	75,594,192	74,287,965	86,935,557	75,208,238	391,681,987
Public Utilities-Water	45,265,585	37,504,135	41,402,100	37,999,639	34,443,907	196,615,366
Public Works	38,636,913	45,085,423	39,288,352	35,677,503	33,975,328	192,663,519
Total Funded Projects	**$ 167,058,533**	**$ 161,183,750**	**$157,478,417**	**$ 163,112,699**	**$ 146,627,473**	**$ 795,460,872**

FUNDED PROJECTS BY MAJOR CATEGORY

CATEGORY	Adopted FY 2026/27	Adopted FY 2027/28	Projected FY 2028/29	Projected FY 2029/30	Projected FY 2030/31	Category Total
Electric	$ 79,656,035	$ 75,594,192	$ 74,287,965	$ 86,935,557	$ 75,208,238	$ 391,681,987
Municipal Buildings and Facilities	1,500,000	1,500,000	1,000,000	1,000,000	1,500,000	6,500,000
Parks, Recreation & Community Services	2,000,000	1,500,000	1,500,000	1,500,000	1,500,000	8,000,000
Public Parking	1,183,334	2,300,000	-	-	-	3,483,334
Railroad-Related	827,300	847,800	-	-	-	1,675,100
Sewer	200,000	10,000,000	10,000,000	7,000,000	5,000,000	32,200,000
Storm Drain	2,004,210	565,000	150,000	150,000	150,000	3,019,210
Transportation	34,422,069	31,372,623	29,138,352	28,527,503	28,825,328	152,285,875
Water	45,265,585	37,504,135	41,402,100	37,999,639	34,443,907	196,615,366
Total Funded Projects	**$ 167,058,533**	**$ 161,183,750**	**$157,478,417**	**$ 163,112,699**	**$ 146,627,473**	**$ 795,460,872**

FUNDED PROJECTS BY FUND

FUND	Adopted FY 2026/27	Adopted FY 2027/28	Projected FY 2028/29	Projected FY 2029/30	Projected FY 2030/31	Fund Total
Electric	$ 79,656,035	$ 75,594,192	$ 74,287,965	$ 86,935,557	$ 75,208,238	$ 391,681,987
Special Gas Tax	14,781,232	13,812,623	13,563,352	13,852,503	14,150,328	70,160,038
Measure A	13,562,300	10,572,800	7,825,000	6,125,000	6,125,000	44,210,100
Measure Z Capital	12,300,000	11,300,000	10,300,000	11,100,000	11,600,000	56,600,000
Public Parking	1,193,381	2,300,000	-	-	-	3,493,381
Sewer	200,000	10,000,000	10,000,000	7,000,000	5,000,000	32,200,000
Storm Drain DIF	100,000	100,000	100,000	100,000	100,000	500,000
Water	45,265,585	37,504,135	41,402,100	37,999,639	34,443,907	196,615,366
Total Funded Projects	**$ 167,058,533**	**$ 161,183,750**	**$157,478,417**	**$ 163,112,699**	**$ 146,627,473**	**$ 795,460,872**

FUNDED PROJECTS BY WARD

The following map identifies the location of all active, single-location, projects in the CIP. Projects that are located throughout multiple wards of the City (e.g., Minor Streets Rehabilitation Program) are not marked.

CITYWIDE MAP OF FUNDED PROJECTS

(excludes citywide projects)

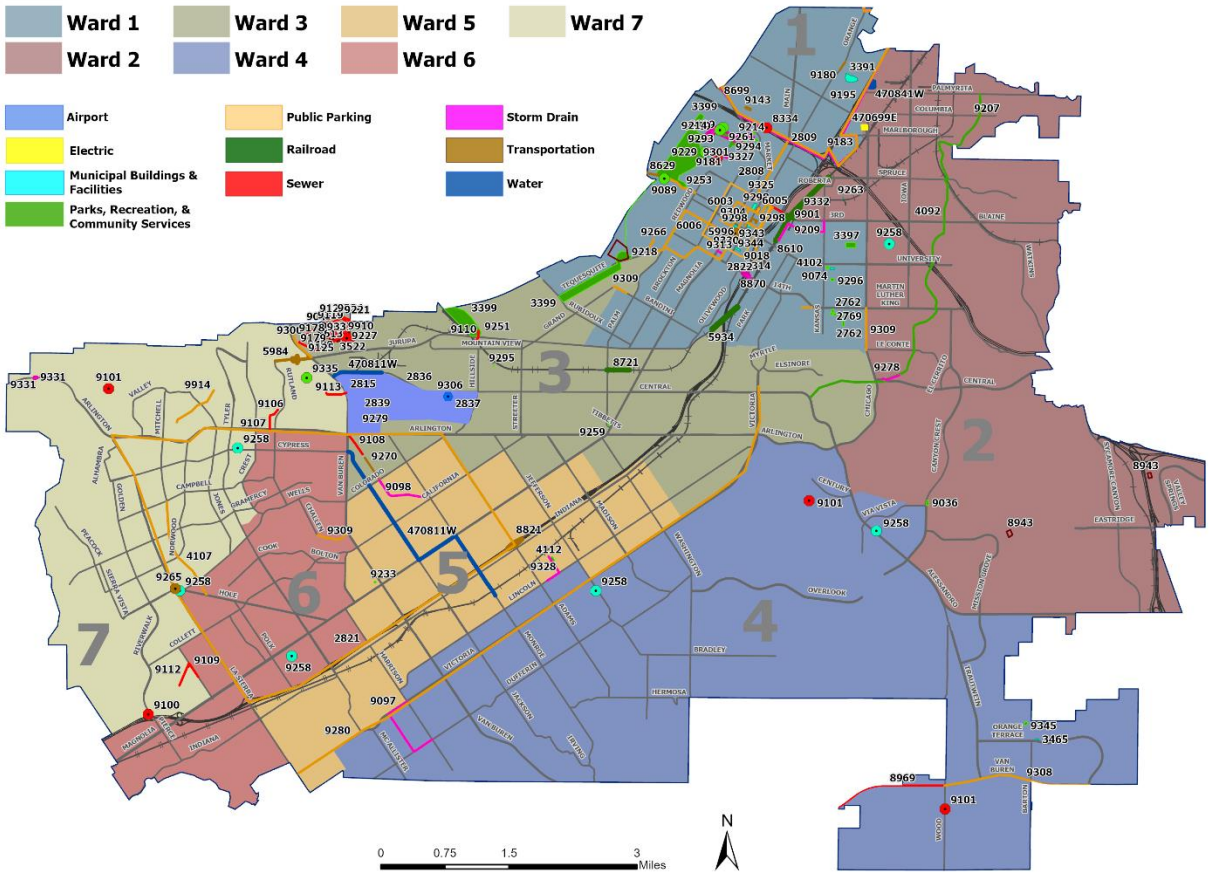

Note: This map includes all active and new capital projects. Ongoing and citywide projects are not included on the map. To view additional information and detailed maps, please visit the City's Budget Transparency Portal at https://Riverside.OpenBook.Questica.com.

Distribution by Ward

WARD	FIVE-YEAR TOTAL
Ward 1	$ 18,327,717
Ward 2	837,550
Ward 3	2,252,500
Ward 4	2,500,000
Ward 5	3,082,500
Ward 6	-
Ward 7	8,700,000
All Wards	759,760,605
Total	**$ 795,460,872**

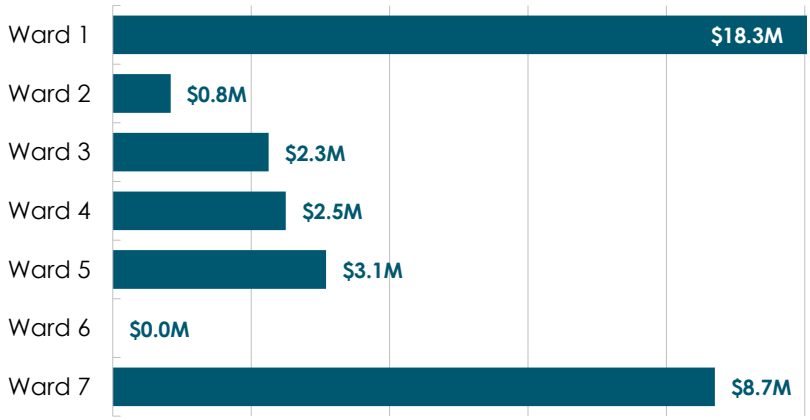

FUNDING SOURCES

Funding for projects is determined on a case-by-case basis and the City employs a combination of approaches to fund capital projects. For many small improvement projects, funds are appropriated from cash on hand. Large-scale capital projects are funded through a variety of funding sources, including long-term financing, user fees, proceeds from bond issues, grants, assessments, impact fees, and certificates of participation (COPs). Since the City's various departments are budgeted within numerous funds with each having multiple revenue streams, departments are responsible for managing the revenue and expenditure budgets of their projects.

ALTERNATIVE FUNDING SOURCES

Due to budget constraints in the General Fund, departments routinely seek alternative funding sources to fund their projects. Various funding sources such as grants, revenues from other agencies, and revenues restricted for such specific purposes are explored and used before unrestricted City revenues. When funding is lacking for priority projects, a request for funds from Measure Z, the City's transactions and use tax, may be considered; requests are presented to the Budget Engagement Commission for deliberation followed by a request for approval by the City Council. To date, Measure Z funding has been used for capital facility maintenance, construction of the new main library, renovation of the main museum, street improvements, parks improvements, and Innovation & Technology (IT) projects.

MAJOR FUNDING SOURCES FOR CAPITAL PROJECTS

Measure Z

On November 8, 2016, Riverside voters approved Measure Z, a general transaction and use tax of 1%, to help pay for critical unfunded City programs and services. Measure Z revenues are anticipated to total $83.6 million and $86.0 million in FY 2026/27 and FY 2027/28, respectively. Of this amount, $12.3 million is earmarked for capital projects in FY 2026/27 and $11.3 million in FY 2027/28. A total of $33.0 million in capital spending funded by Measure Z is projected for fiscal years 2028/29 through 2030/31.

Measure Z activities are tracked in two separate funds: Measure Z Operating (Fund 110) and Measure Z Capital (Fund 420). When capital projects are approved, the necessary funding is transferred from the Operating Fund to the Capital Fund. Over the next five years, planned allocations include $39.1 million for pavement rehabilitation, $8.0 million for park deferred maintenance, $6.5 million for city building deferred maintenance, and $3.0 million for sidewalk repairs.

Gas Tax

The state of California imposes per-gallon excise taxes on gasoline and diesel fuel, sales taxes on gasoline and diesel fuel, and registration taxes on motor vehicles with allocations dedicated to transportation purposes. These allocations flow through the Highway Users Tax Account (HUTA), the familiar gasoline tax revenues that have been in place for decades, and the Road Maintenance and Rehabilitation Account (RMRA) which allocates much of the revenue from the Road Repair and Accountability Act of 2017 (SB-1) to local agencies such as the City of Riverside.

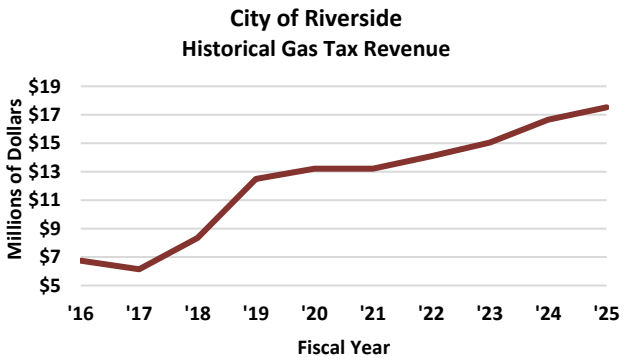

Revenue collected as part of SB-1, which took effect on November 1, 2017, includes an additional 12-cent per gallon increase to the gasoline tax, an additional 20-cent per gallon increase to diesel fuel excise tax (half going to the state Trade Corridor Enhancement Account (TCEA) and half to the RMRA), and an additional vehicle registration tax based on the value of the motor vehicle (effective January

1, 2018). As of July 1, 2020, an additional $100 vehicle registration tax on zero emissions vehicles went into effect. These revenue sources are adjusted annually for inflation by the State of California.

Gas Tax continues to be the primary source of revenue for many transportation projects. Revenue estimates for FY 2026/27 are $18.0 million, which is 5% higher than FY 2025/26 estimates of $17.2 million. The higher forecast is related to an increased demand for gasoline and gasoline-related products.

Measure A

Voters approved a half-cent sales tax in Riverside County for transportation in 1988. Each year, the Riverside County Transportation Commission (RCTC) allocates funds to local agencies to be used on specific capital projects pre-approved by RCTC. Measure A funds are restricted for use on transportation projects such as major highways, commuter rail, local streets and roads. The City's Measure A revenue estimates are based on RCTC's Measure A Program Allocation projection report issued each year.

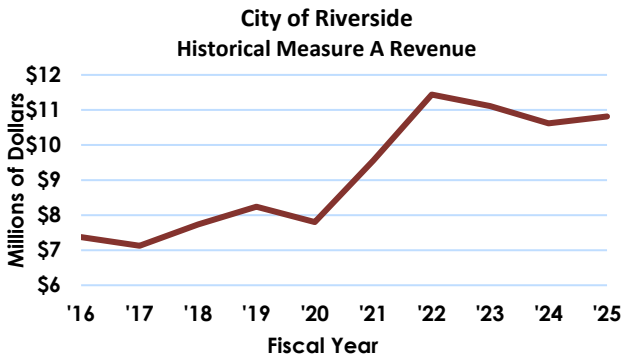

Grants

The City aggressively pursues grants to fund capital projects. Grants are vital to fund projects that have no alternative funding source. Some of the more notable grant funding recently applied for or awarded to the City for capital projects include:

- In FY 2025/26, the Public Works Department was awarded $1,283,142 in TDA Article 3 (SB 821) Bicycle and Pedestrian Facilities Program grant funds for the Van Buren Class II Bike Lanes and Chicago Bike Lanes and Sidewalk projects.
- In FY 2025/26, the Public Works Department was awarded $225,621 for the Fiscal Year 2025/26 Illegal Disposal Sites Abatement Grant Program for the Illegal Disposal Sites Abatement project.
- The Parks, Recreation, and Community Services Department has been awarded a $6,000,000 grant from the California Coastal Conservancy to renovate Martha McLean Anza Narrows Park to replace and relocate the demolished old restroom building, add a playground and water play arroyo, and provide other park improvements.
- The Parks, Recreation, and Community Services Department was awarded a $2,500,000 federal Community Project Funding grant to renovate the Armory Building at Fairmount Park, which is currently not open to the community. The City will also be contributing funds to create a new pickleball complex behind the Armory Building, activating an underutilized area at Fairmount Park.

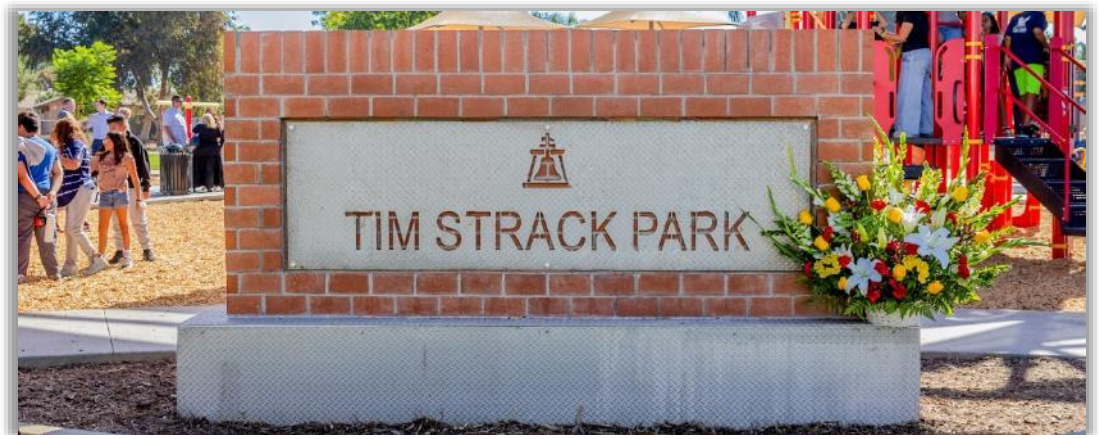

Tim Strack Park Grand Opening

Debt

The City issues debt to support the capital improvement program to distribute the cost of major capital improvement projects over the life of the assets. This ensures generational equity by connecting the cost of the assets to the generations of rate payers/taxpayers that will benefit from them. The following table outlines the current debt issued to support the Capital Improvement Program.

CAPITAL IMPROVEMENT PROGRAM SUPPORTING DEBT

ISSUANCE	CIP PROJECTS	Issuance Amount Designated for CIP[2]
2025A RPFA Revenue Bonds	Museum Project and General Fund CIP	$ 45,000,000
2024 JPM Capital Lease	Water Utility Vehicles	4,814,000
2022A Water Revenue Bonds	Water Infrastructure	63,000,000
2024A Electric Revenue Bonds	Electric Infrastructure	156,000,000
Totals		**$ 268,814,000**

UNFUNDED CAPITAL IMPROVEMENT PROJECTS

The City has identified $1.9 billion in needed projects that currently remain unfunded. Each budget cycle, City departments review the estimated project cost and adjust the unfunded amount as necessary. The list is updated as funding becomes available and as new projects are identified. A complete list of unfunded projects is available in *Appendix A: Schedule of Unfunded Capital Projects*.

UNFUNDED PROJECTS BY DEPARTMENT

DEPARTMENT	Estimated Project Cost	Unfunded Amount
City Manager's Office	$ 12,648,000	10,648,000
General Services	354,998,040	341,169,516
Innovation and Technology	28,234,900	26,264,537
Parks, Recreation, and Community Services	676,078,225	668,031,192
Public Utilities - Electric	39,500,000	39,500,000
Public Utilities - Water	220,295,881	216,573,847
Public Works	680,094,320	577,910,942
Totals	**$ 2,011,849,366**	**$ 1,880,098,034**

[2] A portion of the City's bonds have been issued to refinance previous debt. The figures in this column represent new funds at time of issuance allocated specifically for current capital projects.

CAPITAL IMPROVEMENT PROJECTS BY FUND

	Adopted FY 2026/27	Adopted FY 2027/28	Projected FY 2028/29	Projected FY 2029/30	Projected FY 2030/31	Five-Year Total
230 – GAS TAX						
Arlington Ave Storm Drain	$ 300,000	$ -	$ -	$ -	$ -	$ 300,000
CDBG Street Improvements - Matching Funds	150,000	150,000	150,000	150,000	150,000	750,000
Curb & Gutter Repairs	200,000	200,000	200,000	200,000	200,000	1,000,000
Fairmount Park Storm Drain	492,583	-	-	-	-	492,583
Lincoln Street Storm Drain	415,000	415,000	-	-	-	830,000
Minor Street Preservation	500,000	500,000	500,000	500,000	500,000	2,500,000
Minor Street Rehabilitation	1,500,000	1,500,000	1,500,000	1,500,000	1,500,000	7,500,000
Miscellaneous Bridge Repair	50,000	50,000	50,000	50,000	50,000	250,000
Miscellaneous Storm Drain Construction	50,000	50,000	50,000	50,000	50,000	250,000
Miscellaneous Street Construction	700,000	615,000	500,000	500,000	500,000	2,815,000
Miscellaneous Traffic Projects	75,000	75,000	75,000	75,000	75,000	375,000
Pedestrian Ramps	300,000	300,000	300,000	300,000	300,000	1,500,000
RMRA Rehabilitation & Traffic Improvements	9,412,022	9,357,623	9,638,352	9,927,503	10,225,328	48,560,828
Sidewalk Repair Program	300,000	300,000	300,000	300,000	300,000	1,500,000
Sidewalk/Trail Construction	300,000	300,000	300,000	300,000	300,000	1,500,000
Thirteenth Street Storm Drain	36,627	-	-	-	-	36,627
Total Gas Tax	**$ 14,781,232**	**$ 13,812,623**	**$ 13,563,352**	**$ 13,852,503**	**$ 14,150,328**	**$ 70,160,038**
410 – STORM DRAIN DIF						
Miscellaneous Storm Drain Construction	$ 100,000	$ 100,000	$ 100,000	$ 100,000	$ 100,000	$ 500,000
Total Storm Drain DIF	**$ 100,000**	**$ 100,000**	**$ 100,000**	**$ 100,000**	**$ 100,000**	**$ 500,000**
420 – MEASURE Z CAPITAL						
City Buildings Deferred Maintenance	$ 1,500,000	$ 1,500,000	$ 1,000,000	$ 1,000,000	$ 1,500,000	$ 6,500,000
Parks Deferred Maintenance	2,000,000	1,500,000	1,500,000	1,500,000	1,500,000	8,000,000
Pavement Rehabilitation & Improvements	8,200,000	7,700,000	7,200,000	8,000,000	8,000,000	39,100,000
Sidewalk Repair Program	600,000	600,000	600,000	600,000	600,000	3,000,000
Total Measure Z Capital	**$ 12,300,000**	**$ 11,300,000**	**$ 10,300,000**	**$ 11,100,000**	**$ 11,600,000**	**$ 56,600,000**
432 – MEASURE A						
Arterial Interconnect Maintenance & Replacement	$ 40,000	$ 40,000	$ 40,000	$ 40,000	$ 40,000	$ 200,000
BNSF Quiet Zone - Mission Inn to Marlborough Ave	327,300	347,800	-	-	-	675,100
BNSF/Third Street Grade Separation	500,000	500,000	-	-	-	1,000,000
Controller Assembly Replacement	70,000	70,000	70,000	70,000	70,000	350,000
LED Signal Lens Replacements	20,000	20,000	20,000	20,000	20,000	100,000
Major Streets Rehabilitation	5,075,000	5,575,000	6,075,000	5,275,000	5,275,000	27,275,000
Market Street Bridge Replacement over the Santa Ana River	2,200,000	-	-	-	-	2,200,000

CAPITAL IMPROVEMENT PROJECTS BY FUND

	Adopted FY 2026/27	Adopted FY 2027/28	Projected FY 2028/29	Projected FY 2029/30	Projected FY 2030/31	Five-Year Total
Miscellaneous Signal Revisions	125,000	125,000	125,000	125,000	125,000	625,000
Mission Boulevard Bridge Replacement at Santa Ana River	-	1,300,000	900,000	-	-	2,200,000
New Traffic Signal Installations	500,000	500,000	500,000	500,000	500,000	2,500,000
Sidewalk Repair Program	4,000,000	2,000,000	-	-	-	6,000,000
Thirteenth Street Storm Drain	610,000	-	-	-	-	610,000
Traffic Detection Replacement Program	25,000	25,000	25,000	25,000	25,000	125,000
Traffic Management Center	50,000	50,000	50,000	50,000	50,000	250,000
Traffic Signal Communication Equipment	10,000	10,000	10,000	10,000	10,000	50,000
Traffic Signal Preemption Device Replacement	10,000	10,000	10,000	10,000	10,000	50,000
Total Measure A	**$ 13,562,300**	**$ 10,572,800**	**$ 7,825,000**	**$ 6,125,000**	**$ 6,125,000**	**$ 44,210,100**
510 - ELECTRIC						
Advanced Distribution Management System	$ 300,000	$ 300,000	$ 300,000	$ 300,000	$ 400,000	$ 1,600,000
Advanced Metering Infrastructure	3,843,621	3,861,894	1,962,021	2,017,939	-	11,685,475
Cable Replacement	8,166,364	8,730,603	8,730,603	8,730,604	8,979,425	43,337,599
Citywide Communications	1,300,000	1,300,000	1,300,000	1,300,000	1,300,000	6,500,000
Customer Information System (CIS) Upgrade	-	-	-	8,600,000	8,600,000	17,200,000
Distribution Automation	685,000	685,000	685,000	685,000	885,000	3,625,000
Distribution Line Extensions	6,596,582	5,901,071	6,036,187	6,074,978	6,248,161	30,856,979
General Order 165 Upgrades/Line Rebuilds/Relocation - Overhead	3,781,585	3,781,585	3,781,585	3,781,585	3,889,360	19,015,700
General Order 165 Upgrades/Line Rebuilds/Relocation - Underground	1,500,000	1,700,000	1,700,000	1,700,000	1,900,000	8,500,000
Generating Station	13,150,000	6,600,000	7,350,000	11,200,000	350,000	38,650,000
Land Mobile Radio	-	-	365,672	376,094	741,020	1,482,786
Line Rebuilds	6,357,922	6,437,424	6,437,424	6,437,424	6,538,240	32,208,434
Major 4-12 kV Conversion	5,099,092	5,778,628	5,778,628	5,778,628	5,943,319	28,378,295
Major Feeders	250,000	300,000	300,000	300,000	300,000	1,450,000
Major Overhead / Underground Conversions	200,000	300,000	300,000	300,000	300,000	1,400,000
Major Streetlight Projects	794,773	994,773	994,773	994,773	994,773	4,773,865
Major Transmission Line Projects	300,000	400,000	400,000	400,000	400,000	1,900,000
Meters	500,000	500,000	500,000	500,000	500,000	2,500,000
Mobile Applications	-	-	-	-	641,020	641,020
Neighborhood Streetlight Retrofit	1,480,938	1,480,938	1,480,938	1,480,938	1,523,145	7,446,897
Network Communication System	1,324,472	1,362,220	1,288,960	1,325,695	-	5,301,347
Operational Technology Governance	382,108	395,848	322,555	334,597	-	1,435,108
Outage Management System	-	-	776,178	798,300	821,051	2,395,529

CAPITAL IMPROVEMENT PROJECTS BY FUND	Adopted FY 2026/27	Adopted FY 2027/28	Projected FY 2028/29	Projected FY 2029/30	Projected FY 2030/31	Five-Year Total
Services	400,000	400,000	400,000	400,000	400,000	2,000,000
Southern California Edison (SCE) Condemnation Costs	400,000	400,000	400,000	400,000	400,000	2,000,000
Street Lighting	794,772	994,772	994,772	994,772	994,772	4,773,860
Substation Bus & Upgrades	4,505,011	4,505,011	4,505,011	4,505,011	4,633,404	22,653,448
Substation Transformer Addition	9,777,407	10,730,969	9,368,749	9,368,748	9,635,759	48,881,632
Supervisory Control and Data Acquisition (SCADA)	600,000	600,000	600,000	600,000	600,000	3,000,000
System Substation Modifications	851,987	601,439	601,439	601,439	618,580	3,274,884
Transformers	5,752,165	5,970,907	5,970,907	5,970,907	5,970,907	29,635,793
Work, Asset, & Inventory Management Systems	562,236	581,110	656,563	678,125	700,302	3,178,336
Total Electric	**$ 79,656,035**	**$ 75,594,192**	**$ 74,287,965**	**$ 86,935,557**	**$ 75,208,238**	**$391,681,987**
520 - WATER						
Digital Modernization Upgrade	$ 821,173	$ -	$ -	$ -	$ -	$ 821,173
Distribution Automation/Reliability	662,236	-	-	-	-	662,236
Distribution System Facilities Replacements	3,038,000	2,838,000	2,872,242	3,334,668	4,017,343	16,100,253
Facility Rehabilitation Program	4,062,236	6,325,164	2,739,446	2,861,330	4,314,584	20,302,760
Main Replacements Program	11,986,054	11,941,980	16,276,830	14,343,845	14,928,798	69,477,507
Meters	1,378,612	1,326,436	1,500,000	2,000,000	1,500,000	7,705,048
Operational Technology Governance	250,000	250,000	250,000	250,000	250,000	1,250,000
Potable/Irrigation Well Replacements	5,000,000	1,654,430	5,000,000	5,000,000	5,000,000	21,654,430
Pump Station Replacements	300,000	300,000	300,000	300,000	300,000	1,500,000
Recycled Water Facilities - Riverside Habitat Parks and Water Project	4,505,000	-	-	-	-	4,505,000
SCADA Upgrade & System Automation	1,523,143	-	-	-	-	1,523,143
Seven Oaks Dam Conservation - Enhanced Recharge	1,000,000	1,100,000	-	-	-	2,100,000
System Expansion	2,287,000	2,287,000	2,092,500	887,743	913,043	8,467,286
Transmission Mains	8,427,131	9,481,125	10,346,082	8,997,053	3,195,139	40,446,530
Water Stock	25,000	-	25,000	25,000	25,000	100,000
Total Water	**$ 45,265,585**	**$ 37,504,135**	**$ 41,402,100**	**$ 37,999,639**	**$ 34,443,907**	**$196,615,366**
550 – SEWER						
Dexter Wastewater	$ -	$ 2,500,000	$ -	$ -	$ -	$ 2,500,000
Fairgrounds Wastewater	-	3,207,576	-	-	-	3,207,576
Pierce Pump Street Station Rehabilitation	-	-	1,300,000	2,300,000	4,100,000	7,700,000
Priority Pipeline Assessment & Repair	-	-	-	2,000,000	-	2,000,000
Sewer Pipe Replacement - Arlington Valley Channel	-	-	-	-	700,000	700,000
Water Quality Control Plant - Master Plan Update	-	92,424	-	-	-	92,424

CAPITAL IMPROVEMENT PROJECTS BY FUND	Adopted FY 2026/27	Adopted FY 2027/28	Projected FY 2028/29	Projected FY 2029/30	Projected FY 2030/31	Five-Year Total
Water Quality Control Plant - Plant II Sludge Pumps I & II Rehabilitation	-	600,000	-	-	-	600,000
Water Quality Control Plant - Security Upgrades Phase III	200,000	200,000	200,000	200,000	200,000	1,000,000
Water Quality Control Plant - Upgrade Flow Meters to Electromagnetic Meters	-	3,400,000	6,000,000	-	-	9,400,000
Western, Martin Luther King, & Garden Hill Lift Station Rehabilitation	-	-	2,500,000	2,500,000	-	5,000,000
Total Sewer	**$ 200,000**	**$ 10,000,000**	**$ 10,000,000**	**$ 7,000,000**	**$ 5,000,000**	**$ 32,200,000**
570 – PUBLIC PARKING						
On-Street Space Monitoring System	$ 200,000	$ -	$ -	$ -	$ -	$ 200,000
Parking Garage - Guidance, Lighting, Camera System	833,334	-	-	-	-	833,334
Parking Garage #7 - Structural Maintenance	-	500,000	-	-	-	500,000
Parking String Lighting	10,047	-	-	-	-	10,047
Replace IPS Pay Stations	-	1,800,000	-	-	-	1,800,000
Uninterrupted Power Supply Backup System	150,000	-	-	-	-	150,000
Total Public Parking	**$ 1,193,381**	**$ 2,300,000**	**$ -**	**$ -**	**$ -**	**$ 3,493,381**
TOTAL ALL FUNDS	**$167,058,533**	**$161,183,750**	**$157,478,417**	**$163,112,699**	**$146,627,473**	**$795,460,872**

CAPITAL IMPROVEMENT PROJECTS BY CATEGORY

	Adopted FY 2026/27	Adopted FY 2027/28	Projected FY 2028/29	Projected FY 2029/30	Projected FY 2030/31	Five-Year Total
ELECTRIC						
Advanced Distribution Management System	$ 300,000	$ 300,000	$ 300,000	$ 300,000	$ 400,000	$ 1,600,000
Advanced Metering Infrastructure	3,843,621	3,861,894	1,962,021	2,017,939	-	11,685,475
Cable Replacement	8,166,364	8,730,603	8,730,603	8,730,604	8,979,425	43,337,599
Citywide Communications	1,300,000	1,300,000	1,300,000	1,300,000	1,300,000	6,500,000
Customer Information System (CIS) Upgrade	-	-	-	8,600,000	8,600,000	17,200,000
Distribution Automation	685,000	685,000	685,000	685,000	885,000	3,625,000
Distribution Line Extensions	6,596,582	5,901,071	6,036,187	6,074,978	6,248,161	30,856,979
General Order 165 Upgrades/Line Rebuilds/Relocation - Overhead	3,781,585	3,781,585	3,781,585	3,781,585	3,889,360	19,015,700
General Order 165 Upgrades/Line Rebuilds/Relocation - Underground	1,500,000	1,700,000	1,700,000	1,700,000	1,900,000	8,500,000
Generating Station	13,150,000	6,600,000	7,350,000	11,200,000	350,000	38,650,000
Land Mobile Radio	-	-	365,672	376,094	741,020	1,482,786
Line Rebuilds	6,357,922	6,437,424	6,437,424	6,437,424	6,538,240	32,208,434
Major 4-12 kV Conversion	5,099,092	5,778,628	5,778,628	5,778,628	5,943,319	28,378,295
Major Feeders	250,000	300,000	300,000	300,000	300,000	1,450,000
Major Overhead / Underground Conversions	200,000	300,000	300,000	300,000	300,000	1,400,000
Major Streetlight Projects	794,773	994,773	994,773	994,773	994,773	4,773,865
Major Transmission Line Projects	300,000	400,000	400,000	400,000	400,000	1,900,000
Meters	500,000	500,000	500,000	500,000	500,000	2,500,000
Mobile Applications	-	-	-	-	641,020	641,020
Neighborhood Streetlight Retrofit	1,480,938	1,480,938	1,480,938	1,480,938	1,523,145	7,446,897
Network Communication System	1,324,472	1,362,220	1,288,960	1,325,695	-	5,301,347
Operational Technology Governance	382,108	395,848	322,555	334,597	-	1,435,108
Outage Management System	-	-	776,178	798,300	821,051	2,395,529
Services	400,000	400,000	400,000	400,000	400,000	2,000,000
Southern California Edison (SCE) Condemnation Costs	400,000	400,000	400,000	400,000	400,000	2,000,000
Street Lighting	794,772	994,772	994,772	994,772	994,772	4,773,860
Substation Bus & Upgrades	4,505,011	4,505,011	4,505,011	4,505,011	4,633,404	22,653,448
Substation Transformer Addition	9,777,407	10,730,969	9,368,749	9,368,748	9,635,759	48,881,632
Supervisory Control and Data Acquisition (SCADA)	600,000	600,000	600,000	600,000	600,000	3,000,000
System Substation Modifications	851,987	601,439	601,439	601,439	618,580	3,274,884
Transformers	5,752,165	5,970,907	5,970,907	5,970,907	5,970,907	29,635,793
Work, Asset, & Inventory Management Systems	562,236	581,110	656,563	678,125	700,302	3,178,336
Total Electric	**$ 79,656,035**	**$ 75,594,192**	**$ 74,287,965**	**$ 86,935,557**	**$ 75,208,238**	**$391,681,987**

CAPITAL IMPROVEMENT PROJECTS BY CATEGORY

	Adopted FY 2026/27	Adopted FY 2027/28	Projected FY 2028/29	Projected FY 2029/30	Projected FY 2030/31	Five-Year Total
MUNICIPAL BUILDINGS AND FACILITIES						
City Buildings Deferred Maintenance	$ 1,500,000	$ 1,500,000	$ 1,000,000	$ 1,000,000	$ 1,500,000	$ 6,500,000
Total Municipal Buildings and Facilities	**$ 1,500,000**	**$ 1,500,000**	**$ 1,000,000**	**$ 1,000,000**	**$ 1,500,000**	**$ 6,500,000**
PARKS, RECREATION, AND COMMUNITY SERVICES						
Parks Deferred Maintenance	$ 2,000,000	$ 1,500,000	$ 1,500,000	$ 1,500,000	$ 1,500,000	$ 8,000,000
Total Parks, Recreation, and Community Services	**$ 2,000,000**	**$ 1,500,000**	**$ 1,500,000**	**$ 1,500,000**	**$ 1,500,000**	**$ 8,000,000**
PUBLIC PARKING						
On-Street Space Monitoring System	$ 200,000	$ -	$ -	$ -	$ -	$ 200,000
Parking Garage - Guidance, Lighting, Camera System	833,334	-	-	-	-	833,334
Parking Garage #7 - Structural Maintenance	-	500,000	-	-	-	500,000
Replace IPS Pay Stations	-	1,800,000	-	-	-	1,800,000
Uninterrupted Power Supply Backup System	150,000	-	-	-	-	150,000
Total Public Parking	**$ 1,183,334**	**$ 2,300,000**	**$ -**	**$ -**	**$ -**	**$ 3,483,334**
RAILROAD-RELATED						
BNSF Quiet Zone - Mission Inn to Marlborough Ave	$ 327,300	$ 347,800	$ -	$ -	$ -	$ 675,100
BNSF/Third Street Grade Separation	500,000	500,000	-	-	-	1,000,000
Total Railroad-Related	**$ 827,300**	**$ 847,800**	**$ -**	**$ -**	**$ -**	**$ 1,675,100**
SEWER						
Dexter Wastewater	$ -	$ 2,500,000	$ -	$ -	$ -	$ 2,500,000
Fairgrounds Wastewater	-	3,207,576	-	-	-	3,207,576
Pierce Pump Street Station Rehabilitation	-	-	1,300,000	2,300,000	4,100,000	7,700,000
Priority Pipeline Assessment & Repair	-	-	-	2,000,000	-	2,000,000
Sewer Pipe Replacement - Arlington Valley Channel	-	-	-	-	700,000	700,000
Water Quality Control Plant - Master Plan Update	-	92,424	-	-	-	92,424
Water Quality Control Plant - Plant II Sludge Pumps I & II Rehabilitation	-	600,000	-	-	-	600,000
Water Quality Control Plant - Security Upgrades Phase III	200,000	200,000	200,000	200,000	200,000	1,000,000
Water Quality Control Plant - Upgrade Flow Meters to Electromagnetic Meters	-	3,400,000	6,000,000	-	-	9,400,000
Western, Martin Luther King, & Garden Hill Lift Station Rehabilitation	-	-	2,500,000	2,500,000	-	5,000,000
Total Sewer	**$ 200,000**	**$ 10,000,000**	**$ 10,000,000**	**$ 7,000,000**	**$ 5,000,000**	**$ 32,200,000**

CAPITAL IMPROVEMENT PROJECTS BY CATEGORY

	Adopted FY 2026/27	Adopted FY 2027/28	Projected FY 2028/29	Projected FY 2029/30	Projected FY 2030/31	Five-Year Total
STORM DRAIN						
Arlington Ave Storm Drain	$ 300,000	$ -	$ -	$ -	$ -	$ 300,000
Fairmount Park Storm Drain	492,583	-	-	-	-	492,583
Lincoln Street Storm Drain	415,000	415,000	-	-	-	830,000
Miscellaneous Storm Drain Construction	150,000	150,000	150,000	150,000	150,000	750,000
Thirteenth Street Storm Drain	646,627	-	-	-	-	646,627
Total Storm Drain	**$ 2,004,210**	**$ 565,000**	**$ 150,000**	**$ 150,000**	**$ 150,000**	**$ 3,019,210**
TRANSPORTATION						
Arterial Interconnect Maintenance & Replacement	$ 40,000	$ 40,000	$ 40,000	$ 40,000	$ 40,000	$ 200,000
CDBG Street Improvements - Matching Funds	150,000	150,000	150,000	150,000	150,000	750,000
Controller Assembly Replacement	70,000	70,000	70,000	70,000	70,000	350,000
Curb & Gutter Repairs	200,000	200,000	200,000	200,000	200,000	1,000,000
LED Signal Lens Replacements	20,000	20,000	20,000	20,000	20,000	100,000
Major Streets Rehabilitation	5,075,000	5,575,000	6,075,000	5,275,000	5,275,000	27,275,000
Market Street Bridge Replacement over the Santa Ana River	2,200,000	-	-	-	-	2,200,000
Minor Street Preservation	500,000	500,000	500,000	500,000	500,000	2,500,000
Minor Street Rehabilitation	1,500,000	1,500,000	1,500,000	1,500,000	1,500,000	7,500,000
Miscellaneous Bridge Repair	50,000	50,000	50,000	50,000	50,000	250,000
Miscellaneous Signal Revisions	125,000	125,000	125,000	125,000	125,000	625,000
Miscellaneous Street Construction	700,000	615,000	500,000	500,000	500,000	2,815,000
Miscellaneous Traffic Projects	75,000	75,000	75,000	75,000	75,000	375,000
Mission Boulevard Bridge Replacement at Santa Ana River	-	1,300,000	900,000	-	-	2,200,000
New Traffic Signal Installations	500,000	500,000	500,000	500,000	500,000	2,500,000
Parking String Lighting	10,047	-	-	-	-	10,047
Pavement Rehabilitation & Improvements	8,200,000	7,700,000	7,200,000	8,000,000	8,000,000	39,100,000
Pedestrian Ramps	300,000	300,000	300,000	300,000	300,000	1,500,000
RMRA Rehabilitation & Traffic Improvements	9,412,022	9,357,623	9,638,352	9,927,503	10,225,328	48,560,828
Sidewalk Repair Program	4,900,000	2,900,000	900,000	900,000	900,000	10,500,000
Sidewalk/Trail Construction	300,000	300,000	300,000	300,000	300,000	1,500,000
Traffic Detection Replacement Program	25,000	25,000	25,000	25,000	25,000	125,000
Traffic Management Center	50,000	50,000	50,000	50,000	50,000	250,000
Traffic Signal Communication Equipment	10,000	10,000	10,000	10,000	10,000	50,000
Traffic Signal Preemption Device Replacement	10,000	10,000	10,000	10,000	10,000	50,000
Total Transportation	**$ 34,422,069**	**$ 31,372,623**	**$ 29,138,352**	**$ 28,527,503**	**$ 28,825,328**	**$ 152,285,875**

CAPITAL IMPROVEMENT PROJECTS BY CATEGORY

	Adopted FY 2026/27	Adopted FY 2027/28	Projected FY 2028/29	Projected FY 2029/30	Projected FY 2030/31	Five-Year Total
WATER						
Digital Modernization Upgrade	$ 821,173	$ -	$ -	$ -	$ -	$ 821,173
Distribution Automation/Reliability	662,236	-	-	-	-	662,236
Distribution System Facilities Replacements	3,038,000	2,838,000	2,872,242	3,334,668	4,017,343	16,100,253
Facility Rehabilitation Program	4,062,236	6,325,164	2,739,446	2,861,330	4,314,584	20,302,760
Main Replacements Program	11,986,054	11,941,980	16,276,830	14,343,845	14,928,798	69,477,507
Meters	1,378,612	1,326,436	1,500,000	2,000,000	1,500,000	7,705,048
Operational Technology Governance	250,000	250,000	250,000	250,000	250,000	1,250,000
Potable/Irrigation Well Replacements	5,000,000	1,654,430	5,000,000	5,000,000	5,000,000	21,654,430
Pump Station Replacements	300,000	300,000	300,000	300,000	300,000	1,500,000
Recycled Water Facilities - Riverside Habitat Parks and Water Project	4,505,000	-	-	-	-	4,505,000
SCADA Upgrade & System Automation	1,523,143	-	-	-	-	1,523,143
Seven Oaks Dam Conservation - Enhanced Recharge	1,000,000	1,100,000	-	-	-	2,100,000
System Expansion	2,287,000	2,287,000	2,092,500	887,743	913,043	8,467,286
Transmission Mains	8,427,131	9,481,125	10,346,082	8,997,053	3,195,139	40,446,530
Water Stock	25,000	-	25,000	25,000	25,000	100,000
Total Water	**$ 45,265,585**	**$ 37,504,135**	**$ 41,402,100**	**$ 37,999,639**	**$ 34,443,907**	**$196,615,366**
TOTAL ALL CATEGORIES	**$167,058,533**	**$161,183,750**	**$157,478,417**	**$163,112,699**	**$146,627,473**	**$795,460,872**

REVENUE SUMMARY BY FUND[3]

	Adopted FY 2026/27	Adopted FY 2027/28	Projected FY 2028/29	Projected FY 2029/30	Projected FY 2030/31
GENERAL FUNDS					
420 - Measure Z Capital	$ 12,300,000	$ 11,300,000	$ 10,300,000	$ 11,100,000	$ 11,600,000
Total General Funds	**$ 12,300,000**	**$ 11,300,000**	**$ 10,300,000**	**$ 11,100,000**	**$ 11,600,000**
TRANSPORTATION FUNDS					
230 - Gas Tax	$ 18,545,900	$ 18,988,388	$ 19,442,589	$ 19,905,066	$ 20,498,408
432 - Measure A	11,123,000	11,328,000	11,538,000	11,752,000	11,970,040
433 - Transportation DIF	760,000	760,000	760,000	760,000	760,000
Total Transportation Funds	**$ 30,428,900**	**$ 31,076,388**	**$ 31,740,589**	**$ 32,417,066**	**$ 33,228,448**
GRANT FUNDS					
215 - Grants and Restricted Programs	$ 2,682,703	$ 2,779,064	$ 2,811,059	$ 2,836,441	$ 2,864,455
Total Grant Funds	**$ 2,682,703**	**$ 2,779,064**	**$ 2,811,059**	**$ 2,836,441**	**$ 2,864,455**
ENTERPRISE FUNDS					
510 - Electric[4]	$ 563,072,183	$ 563,218,893	$ 611,514,478	$ 584,194,618	$ 584,778,118
520 - Water[4]	159,265,308	154,488,340	157,290,102	150,413,008	159,011,397
530 - Airport	2,380,675	2,446,537	2,514,375	2,584,250	2,656,217
540 - Refuse	40,029,481	42,297,332	44,153,963	45,857,544	47,629,351
550 - Sewer	74,256,685	74,983,400	75,675,113	76,415,455	77,163,325
560 - Special Transit	6,815,905	7,193,467	7,248,900	7,286,631	7,381,484
570 - Public Parking	11,929,649	12,079,592	12,233,754	12,392,257	12,555,238
Total Enterprise Funds	**$857,749,886**	**$856,707,561**	**$910,630,685**	**$879,143,763**	**$891,175,130**
OTHER FUNDS					
240 - Air Quality Management District	$ 478,455	$ 483,240	$ 488,073	$ 492,954	$ 497,883
260 - NPDES Storm Drain	1,522,257	1,565,054	1,581,785	1,596,229	1,604,524
410 - Storm Drain DIF	211,780	213,397	215,032	216,682	218,349
411 - Special Capital Improvement	3,090,630	3,095,142	3,055,578	3,054,444	3,090,219
413 - Regional Park Special Capital Improvement	485,000	485,000	485,000	485,000	485,000
Total Other Funds	**$ 5,788,122**	**$ 5,841,833**	**$ 5,825,468**	**$ 5,845,309**	**$ 5,895,975**
TOTAL REVENUE SOURCES	**$908,949,611**	**$907,704,846**	**$961,307,801**	**$931,342,579**	**$944,764,008**

[3] This schedule includes estimated revenues for funds typically used as a source for capital improvement projects or is planned to fund a capital project in this five-year plan. Note that not all revenues are unrestricted for capital expenditures.

[4] Estimated bond proceeds are included FY 2026-2031 Electric and Water Fund revenue estimates.



AIRPORT

CITY OF RIVERSIDE

PROJECT LOCATION MAP

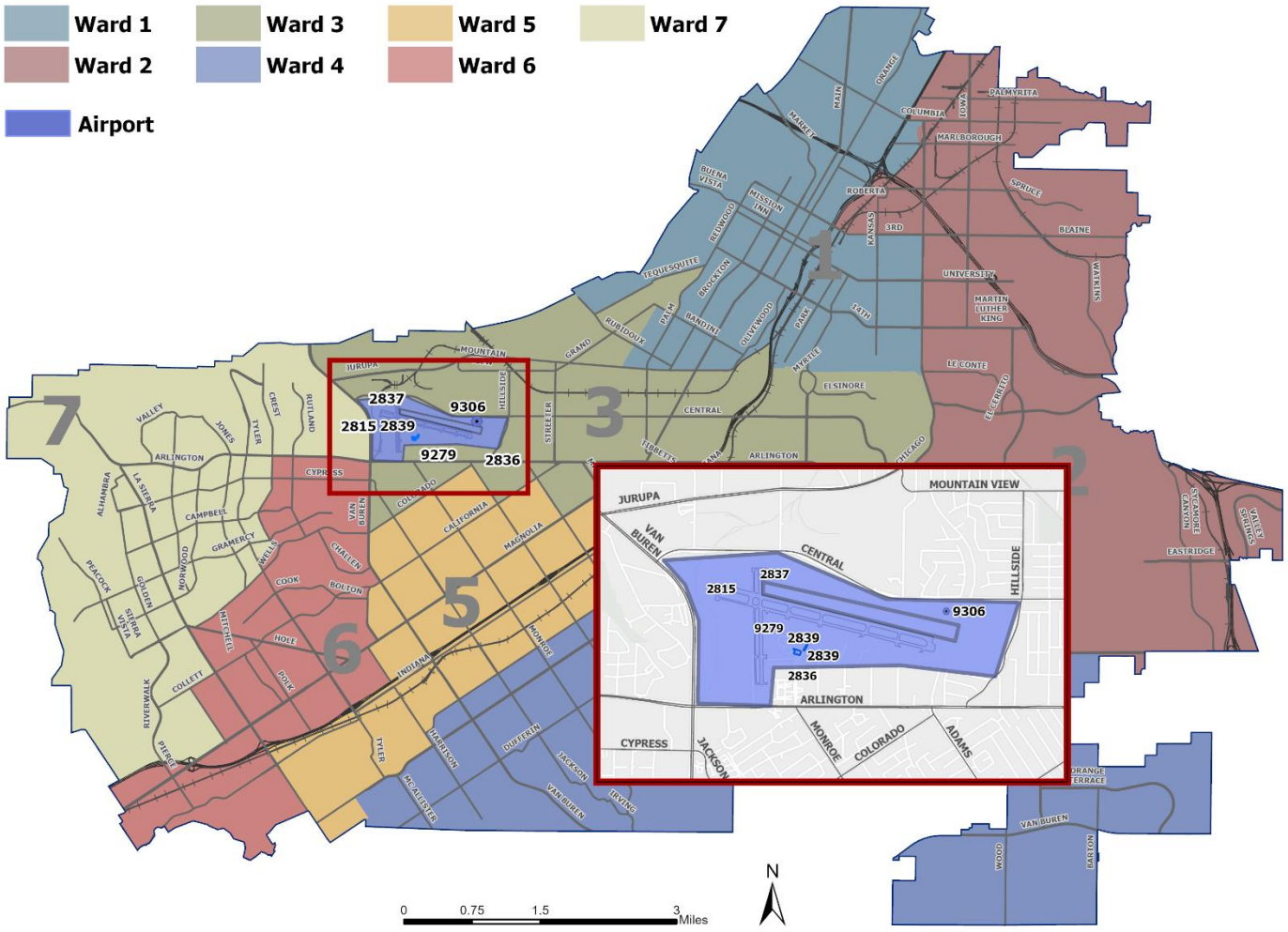

Note: This map includes all active and new capital projects. Ongoing and citywide projects are not included on the map. To view additional information and detailed maps, please visit the City's Budget Transparency Portal at https://Riverside.OpenBook.Questica.com.



This Page Intentionally Left Blank

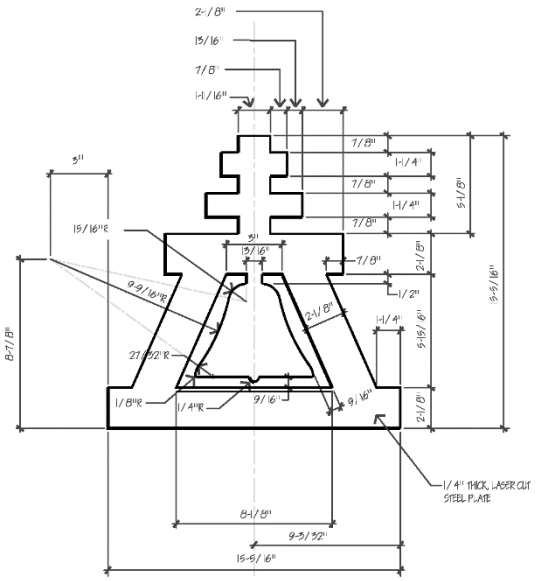

AIRPORT MASTER PLAN

PRIORITIZATION CATEGORIES

- ☒ Risk to Health, Safety and Environment
- ☒ Regulatory or Mandated Requirements
- ☒ Asset Condition, Annual Recurring Costs, and Asset Longevity
- ☒ Community Investment and Economic Prosperity
- ☒ Level and Quality of Service
- ☒ Sustainability and Conservation
- ☒ Funding Availability
- ☐ Project Readiness
- ☐ Multiple Category Benefit and Bundling Opportunities

NEW OR EXISTING

- ☐ New Infrastructure or Facility
- ☒ Existing Infrastructure or Facility



PROJECT NUMBER 9306 **COUNCIL WARD** 3
PROJECT CATEGORY Airport
PROJECT LOCATION 6951 Flight Road

PROJECT DESCRIPTION
This project funds the creation of an updated Airport Master Plan for the Riverside Airport (RAL), located at 6951 Flight Road. The Federal Aviation Administration (FAA) recommends updating these long-term planning documents every seven to ten years; the Airport's last master plan was completed in 2010. This updated plan will provide a clear vision to guide development for the next ten to twenty years. It will identify future capital needs, coordinate environmental reviews and approvals, and define specific land uses for all airport property to enhance safety, efficiency, and revenue generation, ensuring the airport meets future community and aviation demands.

PROJECT STATUS
This project is in the planning and analysis phase. Consultants are gathering airport data and forecasting aviation demand to inform the new master plan. The project is on schedule for completion in Spring 2027.

OPERATING BUDGET IMPACT
This project is a planning study and has no direct impact on the operating budget. Future capital projects identified by this plan will have their operating impacts detailed when they are individually proposed for funding.

PROJECT FUNDING OVERVIEW

Total Project Cost	Prior Years Funding	Five-Year Plan	Remaining Needed
$ 976,531	$ 976,531	$ -	$ -

TWO-YEAR BUDGET AND FIVE-YEAR PLAN

Funding Source	FY 2026/27	FY 2027/28	FY 2028/29	FY 2029/30	FY 2030/31	Total
N/A	$ -	$ -	$ -	$ -	$ -	$ -
Total Funding	**$ -**	**$ -**	**$ -**	**$ -**	**$ -**	**$ -**

AIRPORT PAVEMENT MANAGEMENT STUDY

PRIORITIZATION CATEGORIES

- ☒ Risk to Health, Safety and Environment
- ☐ Regulatory or Mandated Requirements
- ☒ Asset Condition, Annual Recurring Costs, and Asset Longevity
- ☐ Community Investment and Economic Prosperity
- ☐ Level and Quality of Service
- ☐ Sustainability and Conservation
- ☒ Funding Availability
- ☐ Project Readiness
- ☐ Multiple Category Benefit and Bundling Opportunities

NEW OR EXISTING

- ☐ New Infrastructure or Facility
- ☒ Existing Infrastructure or Facility



PROJECT NUMBER 2836 **COUNCIL WARD** 3
PROJECT CATEGORY Airport
PROJECT LOCATION 6951 Flight Road

PROJECT DESCRIPTION
This project funds an Airport Pavement Management Study to assess the condition of all pavements at the Riverside Airport, including runways, taxiways, and aprons. The study will produce a Pavement Condition Index, a critical report required by the Federal Aviation Administration (FAA) to prioritize and fund future rehabilitation projects. This assessment is necessary due to pavement discrepancies noted in recent California Department of Transportation Department of Aeronautics inspections and is essential for maintaining asset condition and ensuring eligibility for federal grants. The resulting management plan will guide capital projects for the next three to five years.

PROJECT STATUS
This project is in the Planning phase. Following the Federal Aviation Administration grant award, a supplemental agreement is being executed with the consultant. The study is anticipated to begin in March 2026 and conclude by March 2027.

OPERATING BUDGET IMPACT
As a planning study, this project will result in a zero-dollar impact to the operating budget. Future capital projects identified by this study will have their operating impacts evaluated when they are proposed.

PROJECT FUNDING OVERVIEW

Total Project Cost	Prior Years Funding	Five-Year Plan	Remaining Needed
$ 110,000	$ 110,000	$ -	$ -

TWO-YEAR BUDGET AND FIVE-YEAR PLAN

Funding Source	FY 2026/27	FY 2027/28	FY 2028/29	FY 2029/30	FY 2030/31	Total
N/A	$ -	$ -	$ -	$ -	$ -	$ -
Total Funding	**$ -**	**$ -**	**$ -**	**$ -**	**$ -**	**$ -**

AIRPORT RUNWAY SAFETY AREA EROSION DESIGN

PRIORITIZATION CATEGORIES

- ☒ Risk to Health, Safety and Environment
- ☒ Regulatory or Mandated Requirements
- ☒ Asset Condition, Annual Recurring Costs, and Asset Longevity
- ☐ Community Investment and Economic Prosperity
- ☐ Level and Quality of Service
- ☐ Sustainability and Conservation
- ☐ Funding Availability
- ☐ Project Readiness
- ☐ Multiple Category Benefit and Bundling Opportunities

NEW OR EXISTING

- ☐ New Infrastructure or Facility
- ☒ Existing Infrastructure or Facility



PROJECT NUMBER 2837 **COUNCIL WARD** 3
PROJECT CATEGORY Airport
PROJECT LOCATION 6951 Flight Road

PROJECT DESCRIPTION
This project is intended to reduce the maintenance of the existing Runway Safety Area (RSA) along the north side of the runway, which erodes during storm events carving into the required 150 feet RSA. The Project area starts at Runway 27 and ends before reaching Runway 16-34. The goal is to solve the significant erosion issues caused by runoff coming from the north parking facility and to safely convey upstream flows coming from an existing culvert under Central Avenue. This project was identified in the Airport Capital Improvement Plan for Riverside Municipal Airport, dated October 23, 2023, prepared by the Airport.

PROJECT STATUS
The FAA grant award was received on August 28, 2025, to fund the design stage. Mead and Hunt will lead the project once a supplemental agreement has been executed. The project is expected to start in February 2026 with an estimated completion date of February 2027.

OPERATING BUDGET IMPACT
Following project completion, there will be no operating budget impact related to the design. The Airport will apply for a new FAA grant to begin construction in 2027 based on the design's findings. Any construction related to the Runway Safety Area Erosion will be a separate FAA grant, expected to be approximately $1,800,000.

PROJECT FUNDING OVERVIEW

Total Project Cost	Prior Years Funding	Five-Year Plan	Remaining Needed
$ 298,280	$ 298,280	$ -	$ -

TWO-YEAR BUDGET AND FIVE-YEAR PLAN

Funding Source	FY 2026/27	FY 2027/28	FY 2028/29	FY 2029/30	FY 2030/31	Total
N/A	$ -	$ -	$ -	$ -	$ -	$ -
Total Funding	**$ -**	**$ -**	**$ -**	**$ -**	**$ -**	**$ -**

AIRPORT TAXIWAY A REHABILITATION

PRIORITIZATION CATEGORIES

- ☐ Risk to Health, Safety and Environment
- ☐ Regulatory or Mandated Requirements
- ☒ Asset Condition, Annual Recurring Costs, and Asset Longevity
- ☐ Community Investment and Economic Prosperity
- ☐ Level and Quality of Service
- ☐ Sustainability and Conservation
- ☒ Funding Availability
- ☒ Project Readiness
- ☒ Multiple Category Benefit and Bundling Opportunities

NEW OR EXISTING

- ☐ New Infrastructure or Facility
- ☒ Existing Infrastructure or Facility



PROJECT NUMBER 2815 **COUNCIL WARD** 3
PROJECT CATEGORY Airport
PROJECT LOCATION 6951 Flight Road

PROJECT DESCRIPTION
This project rehabilitates Taxiway A at the Riverside Airport (RAL) to address deteriorating pavement conditions. The work includes pavement marking removal, crack filling, applying an asphalt pavement surface sealcoat, adding new markings, and modifying existing airfield signs. Proactively maintaining the taxiway surface ensures continued safe aircraft operations and compliance with Federal Aviation Administration (FAA) standards. This project will extend the useful life of the taxiway pavement by an estimated 10 to 15 years, reducing the need for more costly reconstruction in the future.

PROJECT STATUS
This project is in the construction phase. Crews have completed pavement marking removal, crack filling, asphalt pavement surface sealcoat and are currently working to replace the existing airfield signs. The full rehabilitation of Taxiway A is anticipated to be complete by August 2026.

OPERATING BUDGET IMPACT
This project rehabilitates existing infrastructure. Future minor maintenance costs, estimated at $10,000 to $50,000 every 3 to 5 years, will be absorbed into the existing Airport operating budget. There is no net increase in operating costs from this project.

PROJECT FUNDING OVERVIEW

Total Project Cost	Prior Years Funding	Five-Year Plan	Remaining Needed
$ 963,419	$ 963,419	$ -	$ -

TWO-YEAR BUDGET AND FIVE-YEAR PLAN

Funding Source	FY 2026/27	FY 2027/28	FY 2028/29	FY 2029/30	FY 2030/31	Total
N/A	$ -	$ -	$ -	$ -	$ -	$ -
Total Funding	**$ -**	**$ -**	**$ -**	**$ -**	**$ -**	**$ -**

CRITICAL AIRPORT IMPROVEMENTS

PRIORITIZATION CATEGORIES

- ☒ Risk to Health, Safety and Environment
- ☐ Regulatory or Mandated Requirements
- ☒ Asset Condition, Annual Recurring Costs, and Asset Longevity
- ☐ Community Investment and Economic Prosperity
- ☒ Level and Quality of Service
- ☐ Sustainability and Conservation
- ☐ Funding Availability
- ☐ Project Readiness
- ☐ Multiple Category Benefit and Bundling Opportunities

NEW OR EXISTING

- ☐ New Infrastructure or Facility
- ☒ Existing Infrastructure or Facility



PROJECT NUMBER 9279 **COUNCIL WARD** 3
PROJECT CATEGORY Airport
PROJECT LOCATION 6951 Flight Road

PROJECT DESCRIPTION
This project prioritizes roof repairs and/or replacements and restoration work for various buildings and hangars throughout the Airport campus, including the Main Terminal, the FAA Building, the Civil Air Patrol building, and the Airport Operations and Maintenance facility. Associated restoration work will address replacing damaged wood decking, asbestos removal, and rust corrosion.

PROJECT STATUS
Three roof replacement projects have been prioritized, the Main Terminal building, Parflight Hangar building, and Wayport Maintenance West roof. The work is tentatively scheduled to commence in January 2026 with an estimated completion date of December 2027.

OPERATING BUDGET IMPACT
No additional operating budget impact beyond normal maintenance costs is anticipated as this project entails repairs to existing facilities.

PROJECT FUNDING OVERVIEW

Total Project Cost	Prior Years Funding	Five-Year Plan	Remaining Needed
$ 3,720,000	$ 2,000,000	$ -	$ 1,720,000

TWO-YEAR BUDGET AND FIVE-YEAR PLAN

Funding Source	FY 2026/27	FY 2027/28	FY 2028/29	FY 2029/30	FY 2030/31	Total
N/A	$ -	$ -	$ -	$ -	$ -	$ -
Total Funding	**$ -**	**$ -**	**$ -**	**$ -**	**$ -**	**$ -**

This Page Intentionally Left Blank

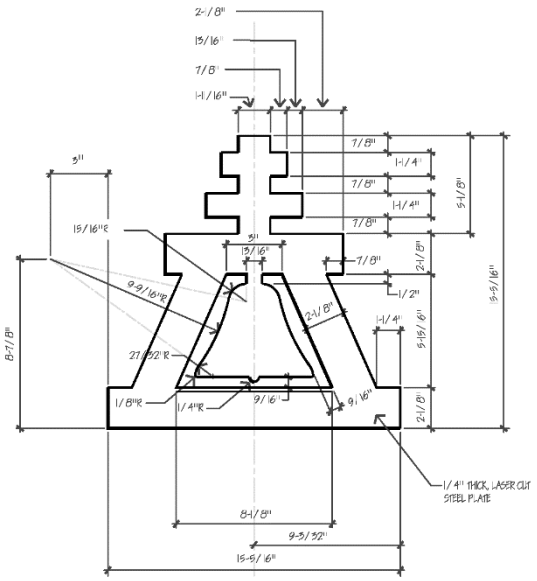



ELECTRIC

CITY OF RIVERSIDE

PROJECT LOCATION MAP

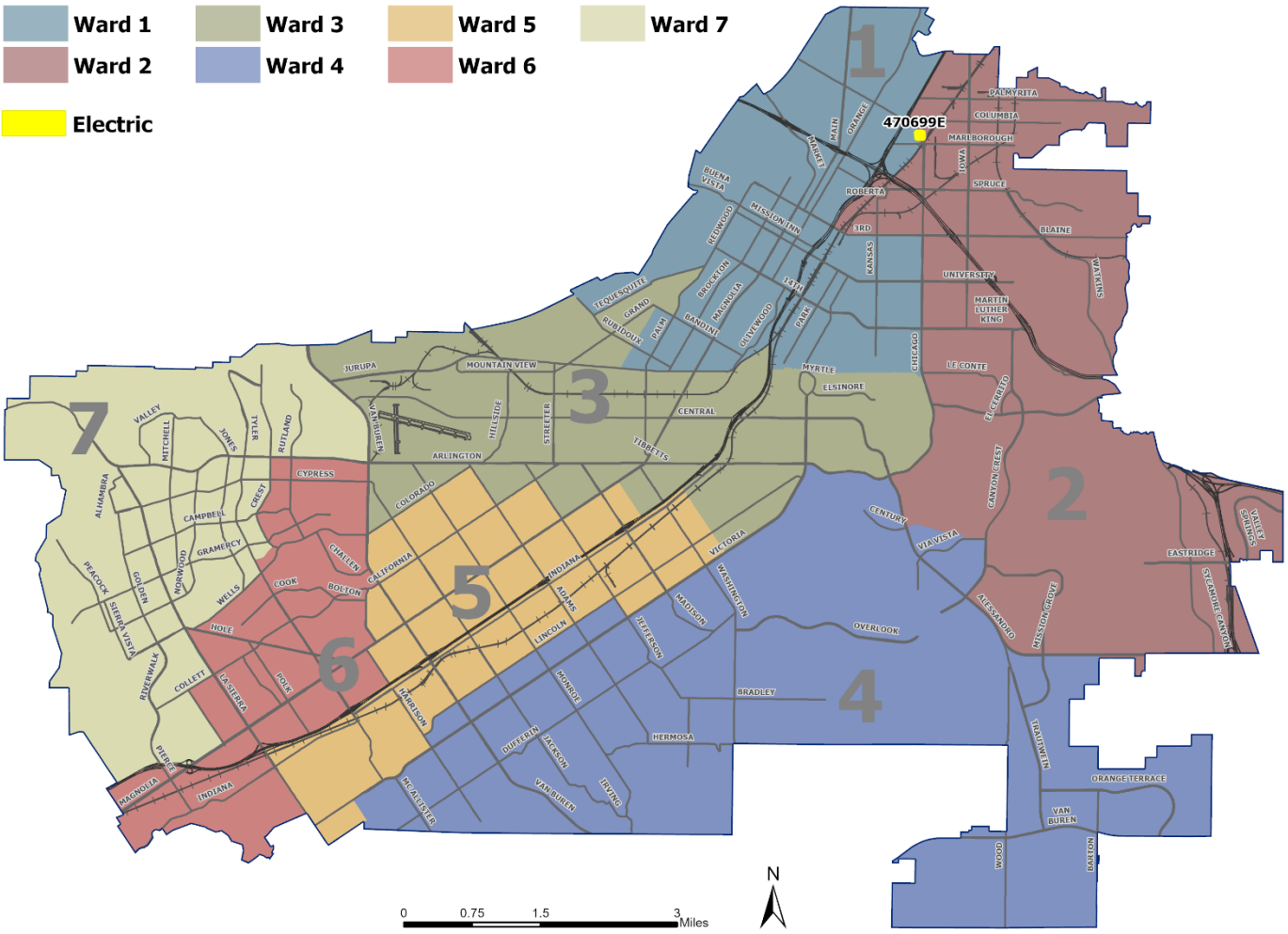

Note: This map includes all active and new capital projects. Ongoing and citywide projects are not included on the map. To view additional information and detailed maps, please visit the City's Budget Transparency Portal at https://Riverside.OpenBook.Questica.com.



This Page Intentionally Left Blank

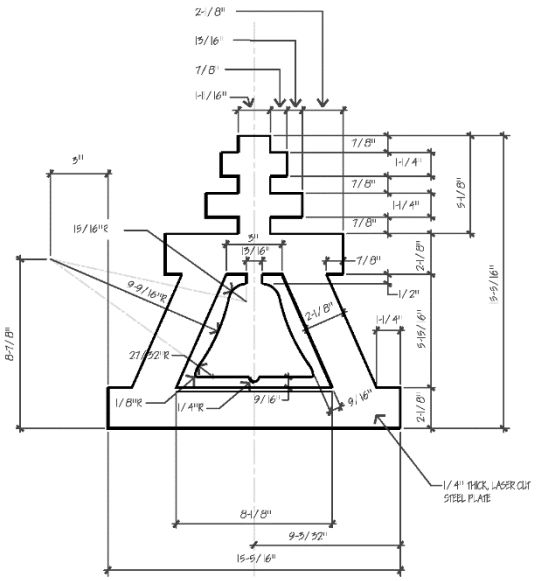

ADVANCED DISTRIBUTION MANAGEMENT SYSTEM

PRIORITIZATION CATEGORIES

- ☐ Risk to Health, Safety and Environment
- ☐ Regulatory or Mandated Requirements
- ☐ Asset Condition, Annual Recurring Costs, and Asset Longevity
- ☐ Community Investment and Economic Prosperity
- ☒ Level and Quality of Service
- ☐ Sustainability and Conservation
- ☐ Funding Availability
- ☒ Project Readiness
- ☒ Multiple Category Benefit and Bundling Opportunities

NEW OR EXISTING

- ☒ New Infrastructure or Facility
- ☐ Existing Infrastructure or Facility



PROJECT NUMBER 470830E
PROJECT CATEGORY Electric Utility
PROJECT LOCATION Citywide
COUNCIL WARD All Wards

PROJECT DESCRIPTION
The Advanced Distribution Management System (ADMS) is a set of systems and technology solutions used to optimize the capability, efficiency, reliability, and security of water and electric delivery systems. For electric delivery systems, ADMS features include voltage optimization (i.e., volt-var optimization and conservation voltage regulation/reduction), fault location, isolation, and restoration (FLISR), outage management, and state estimation. ADMS is a long-term vision for Riverside Public Utilities (RPU). ADMS and the Outage Management System (OMS) will be integrated and will provide additional visibility and efficiencies to the electric system to increase customer reliability.

PROJECT STATUS
The project is anticipated to start in December 2026 with an estimated completion date of Summer 2031.

OPERATING BUDGET IMPACT
Following the ADMS implementation, there will be no significant fiscal impact outside of the annual software license and maintenance costs which will be included in Energy Delivery's operating budgets. Estimated amount of operating budget impacts will be evaluated closer to project completion.

PROJECT FUNDING OVERVIEW

Total Project Cost	Prior Years Funding	Five-Year Plan	Remaining Needed
$ 8,315,056	$ 6,715,056	$ 1,600,000	$ -

TWO-YEAR BUDGET AND FIVE-YEAR PLAN

Funding Source	FY 2026/27	FY 2027/28	FY 2028/29	FY 2029/30	FY 2030/31	Total
510 - Electric Fund	$ 300,000	$ 300,000	$ 300,000	$ 300,000	$ 400,000	$ 1,600,000
Total Funding	**$ 300,000**	**$ 300,000**	**$ 300,000**	**$ 300,000**	**$ 400,000**	**$ 1,600,000**

ADVANCED METERING INFRASTRUCTURE

PRIORITIZATION CATEGORIES

- ☐ Risk to Health, Safety and Environment
- ☐ Regulatory or Mandated Requirements
- ☒ Asset Condition, Annual Recurring Costs, and Asset Longevity
- ☐ Community Investment and Economic Prosperity
- ☒ Level and Quality of Service
- ☐ Sustainability and Conservation
- ☐ Funding Availability
- ☐ Project Readiness
- ☒ Multiple Category Benefit and Bundling Opportunities

NEW OR EXISTING

- ☒ New Infrastructure or Facility
- ☒ Existing Infrastructure or Facility

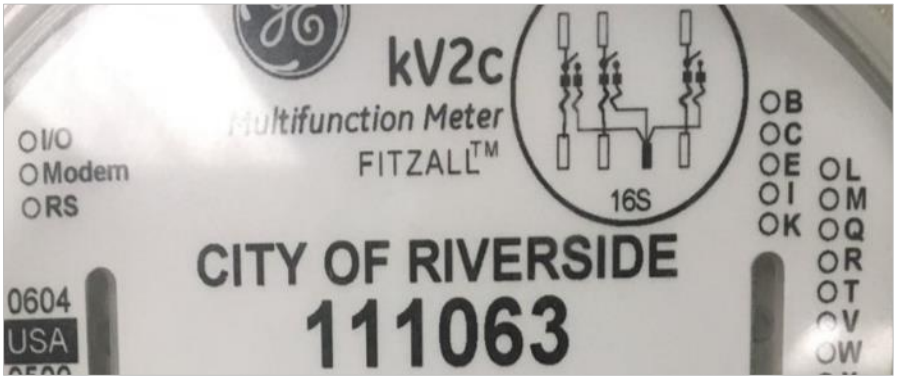

PROJECT NUMBER 470823E
PROJECT CATEGORY Electric Utility
PROJECT LOCATION Citywide
COUNCIL WARD All Wards

PROJECT DESCRIPTION
This system automation project for the Advanced Metering Infrastructure (AMI) and Meter Data Management System will integrate AMI data and support customer-facing applications and web integration of the Customer Integration System. The AMI delivers automated meter reading resulting in more efficient consumption management and enhanced customer service.

PROJECT STATUS
The system automation project began in FY 2019/20. The system and integration portion of the project was completed in 2020. As of 2025, approximately 55,000 AMI meters have been installed. AMI meter installations will continue until all electric meters have been replaced, currently estimated in December 2029.

OPERATING BUDGET IMPACT
The operating budget includes ongoing annual software license and maintenance costs of approximately $200,000 per year.

PROJECT FUNDING OVERVIEW

Total Project Cost	Prior Years Funding	Five-Year Plan	Remaining Needed
$ 37,925,151	$ 26,239,676	$ 11,685,475	$ -

TWO-YEAR BUDGET AND FIVE-YEAR PLAN

Funding Source	FY 2026/27	FY 2027/28	FY 2028/29	FY 2029/30	FY 2030/31	Total
510 - Electric Fund	$ 3,843,621	$ 3,861,894	$ 1,962,021	$ 2,017,939	$ -	$ 11,685,475
Total Funding	**$ 3,843,621**	**$ 3,861,894**	**$ 1,962,021**	**$ 2,017,939**	**$ -**	**$ 11,685,475**

CABLE REPLACEMENT

PRIORITIZATION CATEGORIES

- ☐ Risk to Health, Safety and Environment
- ☐ Regulatory or Mandated Requirements
- ☒ Asset Condition, Annual Recurring Costs, and Asset Longevity
- ☐ Community Investment and Economic Prosperity
- ☒ Level and Quality of Service
- ☐ Sustainability and Conservation
- ☐ Funding Availability
- ☐ Project Readiness
- ☒ Multiple Category Benefit and Bundling Opportunities

NEW OR EXISTING

- ☒ New Infrastructure or Facility
- ☒ Existing Infrastructure or Facility



PROJECT NUMBER 470635E
PROJECT CATEGORY Electric Utility
PROJECT LOCATION Citywide
COUNCIL WARD All Wards

PROJECT DESCRIPTION
The Cable Replacement Program ensures the proactive replacement of the aging electric distribution cable infrastructure throughout the City to ensure reliability to customers.

PROJECT STATUS
The ongoing replacement of underground cable is prioritized for replacement based upon outage analysis, as well as the age and obsolescence of existing equipment.

OPERATING BUDGET IMPACT
The project replaces existing and/or adds new infrastructure to the electric system and will not require additional operating and maintenance costs.

PROJECT FUNDING OVERVIEW

Total Project Cost	Prior Years Funding	Five-Year Plan	Remaining Needed
Ongoing	$ 43,727,703	$ 43,337,599	Ongoing

TWO-YEAR BUDGET AND FIVE-YEAR PLAN

Funding Source	FY 2026/27	FY 2027/28	FY 2028/29	FY 2029/30	FY 2030/31	Total
510 - Electric Fund	$ 8,166,364	$ 8,730,603	$ 8,730,603	$ 8,730,604	$ 8,979,425	$ 43,337,599
Total Funding	**$ 8,166,364**	**$ 8,730,603**	**$ 8,730,603**	**$ 8,730,604**	**$ 8,979,425**	**$ 43,337,599**

CABLE REPLACEMENT - PUBLIC WORKS STREET REHABILITATION

PRIORITIZATION CATEGORIES

- ☐ Risk to Health, Safety and Environment
- ☐ Regulatory or Mandated Requirements
- ☒ Asset Condition, Annual Recurring Costs, and Asset Longevity
- ☐ Community Investment and Economic Prosperity
- ☒ Level and Quality of Service
- ☐ Sustainability and Conservation
- ☐ Funding Availability
- ☐ Project Readiness
- ☒ Multiple Category Benefit and Bundling Opportunities

NEW OR EXISTING

- ☒ New Infrastructure or Facility
- ☒ Existing Infrastructure or Facility



PROJECT NUMBER 470636E
PROJECT CATEGORY Electric Utility
PROJECT LOCATION Citywide
COUNCIL WARD All Wards

PROJECT DESCRIPTION
Replaces aging electric distribution cable with high potential for failure in coordination with Public Works Street rehabilitation areas.

PROJECT STATUS
The ongoing replacement of underground cable is prioritized based upon the schedule of Public Works street projects. Currently, no funding is budgeted based on the priorities of street projects, however this will be updated as the fiscal year progresses, and project needs come forward.

OPERATING BUDGET IMPACT
The project replaces existing and/or adds new infrastructure to the electric system and will not require additional operating and maintenance costs.

PROJECT FUNDING OVERVIEW

Total Project Cost	Prior Years Funding	Five-Year Plan	Remaining Needed
Ongoing	$ 19	$ -	Ongoing

TWO-YEAR BUDGET AND FIVE-YEAR PLAN

Funding Source	FY 2026/27	FY 2027/28	FY 2028/29	FY 2029/30	FY 2030/31	Total
N/A	$ -	$ -	$ -	$ -	$ -	$ -
Total Funding	**$ -**	**$ -**	**$ -**	**$ -**	**$ -**	**$ -**

CAPACITORS - REGULATORS

PRIORITIZATION CATEGORIES

- ☐ Risk to Health, Safety and Environment
- ☐ Regulatory or Mandated Requirements
- ☒ Asset Condition, Annual Recurring Costs, and Asset Longevity
- ☐ Community Investment and Economic Prosperity
- ☒ Level and Quality of Service
- ☐ Sustainability and Conservation
- ☐ Funding Availability
- ☐ Project Readiness
- ☒ Multiple Category Benefit and Bundling Opportunities

NEW OR EXISTING

- ☒ New Infrastructure or Facility
- ☐ Existing Infrastructure or Facility



PROJECT NUMBER 470612E
PROJECT CATEGORY Electric Utility
PROJECT LOCATION Citywide
COUNCIL WARD All Wards

PROJECT DESCRIPTION
Includes the purchase and installation of new capacitors and regulator devices to maintain electric power quality to Riverside customers. Locations are prioritized based on a comprehensive analysis of power quality modeling and system parameters. The design of these equipment installations complements existing facilities and considers overall area electrical requirements.

PROJECT STATUS
Ongoing purchase and installation of distribution system capacitors and regulators, which contributes to fulfilling the City's obligation to serve electric load requirements within the City service area.

OPERATING BUDGET IMPACT
The project replaces existing and/or adds new infrastructure to the electric system and will not require additional operating and maintenance costs.

PROJECT FUNDING OVERVIEW

Total Project Cost	Prior Years Funding	Five-Year Plan	Remaining Needed
Ongoing	$ 509,191	$ -	Ongoing

TWO-YEAR BUDGET AND FIVE-YEAR PLAN

Funding Source	FY 2026/27	FY 2027/28	FY 2028/29	FY 2029/30	FY 2030/31	Total
N/A	$ -	$ -	$ -	$ -	$ -	$ -
Total Funding	**$ -**	**$ -**	**$ -**	**$ -**	**$ -**	**$ -**

CITYWIDE COMMUNICATIONS

PRIORITIZATION CATEGORIES

- ☐ Risk to Health, Safety and Environment
- ☐ Regulatory or Mandated Requirements
- ☒ Asset Condition, Annual Recurring Costs, and Asset Longevity
- ☐ Community Investment and Economic Prosperity
- ☒ Level and Quality of Service
- ☐ Sustainability and Conservation
- ☐ Funding Availability
- ☐ Project Readiness
- ☒ Multiple Category Benefit and Bundling Opportunities

NEW OR EXISTING

- ☒ New Infrastructure or Facility
- ☒ Existing Infrastructure or Facility



PROJECT NUMBER 470664E
PROJECT CATEGORY Electric Utility
PROJECT LOCATION Citywide
COUNCIL WARD All Wards

PROJECT DESCRIPTION
The Citywide Communications project provides for design and installation of fiber optic extensions between electric facilities and fiber network service points. Individual projects include additions that complement existing facilities and improve overall fiber optic system operation. This project also includes cyber-security upgrades of critical network equipment.

PROJECT STATUS
This is an ongoing project for the continuous installation and upgrade of communication equipment which contributes to fulfilling the City's obligation to serve electric load requirements within the City service territory.

OPERATING BUDGET IMPACT
This project replaces existing and/or adds new infrastructure to the electric system and will not require additional operating and maintenance costs.

PROJECT FUNDING OVERVIEW

Total Project Cost	Prior Years Funding	Five-Year Plan	Remaining Needed
Ongoing	$ 30,158,590	$ 6,500,000	Ongoing

TWO-YEAR BUDGET AND FIVE-YEAR PLAN

Funding Source	FY 2026/27	FY 2027/28	FY 2028/29	FY 2029/30	FY 2030/31	Total
510 - Electric Fund	$ 1,300,000	$ 1,300,000	$ 1,300,000	$ 1,300,000	$ 1,300,000	$ 6,500,000
Total Funding	**$ 1,300,000**	**$ 1,300,000**	**$ 1,300,000**	**$ 1,300,000**	**$ 1,300,000**	**$ 6,500,000**

CUSTOMER INFORMATION SYSTEM (CIS) UPGRADE

PRIORITIZATION CATEGORIES

- ☐ Risk to Health, Safety and Environment
- ☐ Regulatory or Mandated Requirements
- ☒ Asset Condition, Annual Recurring Costs, and Asset Longevity
- ☐ Community Investment and Economic Prosperity
- ☒ Level and Quality of Service
- ☐ Sustainability and Conservation
- ☐ Funding Availability
- ☐ Project Readiness
- ☒ Multiple Category Benefit and Bundling Opportunities

NEW OR EXISTING

- ☒ New Infrastructure or Facility
- ☐ Existing Infrastructure or Facility



PROJECT NUMBER 470694E
PROJECT CATEGORY Electric Utility
PROJECT LOCATION Citywide
COUNCIL WARD All Wards

PROJECT DESCRIPTION
The Customer Information System (CIS) is an enterprise software application that is integrated with other enterprise systems to manage and perform the Meter to Cash Process. The CIS system is the system of records for all Utility customers' related data needed to bill and manage customers inquires. The CIS system generates bills for approximately $600 million in annual utility revenues. This project will upgrade the CIS application, the customer facing web portal, and any related databases to ensure improved operations of the billing and customer service system. In addition, the Utility Work Order Asset Management (UWAM) is a critical enterprise system used by all of RPU along with many other City departments. As a system it provides work order tracking, cost allocation tracking, asset management, time keeping, among many other critical needs. UWAM also interfaces with other enterprise systems.

PROJECT STATUS
The CIS Project has an expected start date of July 2030 and completion date of July 2032. The UWAM Project is in the planning phase with an expected completion date of July 2029.

OPERATING BUDGET IMPACT
Additional ongoing annual software license and maintenance costs of approximately $100,000 will be included in the budget starting in the fiscal year after project completion.

PROJECT FUNDING OVERVIEW

Total Project Cost	Prior Years Funding	Five-Year Plan	Remaining Needed
$ 37,823,980	$ 20,623,980	$ 17,200,000	$ -

TWO-YEAR BUDGET AND FIVE-YEAR PLAN

Funding Source	FY 2026/27	FY 2027/28	FY 2028/29	FY 2029/30	FY 2030/31	Total
510 - Electric Fund	$ -	$ -	$ -	$ 8,600,000	$ 8,600,000	$ 17,200,000
Total Funding	**$ -**	**$ -**	**$ -**	**$ 8,600,000**	**$ 8,600,000**	**$ 17,200,000**

DARK FIBER

PRIORITIZATION CATEGORIES

- ☐ Risk to Health, Safety and Environment
- ☐ Regulatory or Mandated Requirements
- ☐ Asset Condition, Annual Recurring Costs, and Asset Longevity
- ☒ Community Investment and Economic Prosperity
- ☒ Level and Quality of Service
- ☐ Sustainability and Conservation
- ☐ Funding Availability
- ☐ Project Readiness
- ☒ Multiple Category Benefit and Bundling Opportunities

NEW OR EXISTING

- ☒ New Infrastructure or Facility
- ☐ Existing Infrastructure or Facility



PROJECT NUMBER 470698E
PROJECT CATEGORY Electric Utility
PROJECT LOCATION Citywide
COUNCIL WARD All Wards

PROJECT DESCRIPTION
Project includes optical fiber infrastructure for telecommunications companies, wireless operators, enterprise networks, data centers and others with critical, high-capacity needs.

PROJECT STATUS
This is an ongoing project providing optical fiber infrastructure to various customers with critical high-capacity needs.

OPERATING BUDGET IMPACT
This project replaces existing and/or adds new infrastructure to the electric system and will not require additional operating and maintenance costs.

PROJECT FUNDING OVERVIEW

Total Project Cost	Prior Years Funding	Five-Year Plan	Remaining Needed
Ongoing	$ 1,293,972	$ -	Ongoing

TWO-YEAR BUDGET AND FIVE-YEAR PLAN

Funding Source	FY 2026/27	FY 2027/28	FY 2028/29	FY 2029/30	FY 2030/31	Total
N/A	$ -	$ -	$ -	$ -	$ -	$ -
Total Funding	**$ -**	**$ -**	**$ -**	**$ -**	**$ -**	**$ -**

DISTRIBUTION AUTOMATION

PRIORITIZATION CATEGORIES

- ☐ Risk to Health, Safety and Environment
- ☐ Regulatory or Mandated Requirements
- ☒ Asset Condition, Annual Recurring Costs, and Asset Longevity
- ☐ Community Investment and Economic Prosperity
- ☒ Level and Quality of Service
- ☐ Sustainability and Conservation
- ☐ Funding Availability
- ☐ Project Readiness
- ☒ Multiple Category Benefit and Bundling Opportunities

NEW OR EXISTING

- ☒ New Infrastructure or Facility
- ☐ Existing Infrastructure or Facility



PROJECT NUMBER 470655E
PROJECT CATEGORY Electric Utility
PROJECT LOCATION Citywide
COUNCIL WARD All Wards

PROJECT DESCRIPTION
Phase I of the Distribution Automation Project begins with the design and installation of remote sensing devices and remotely controlled equipment on the electric grid. This new technology equipment remotely monitors the electric system and reports information immediately to the electric grid control center. Remotely controlled equipment reduces personnel costs and improves response times to system disturbances for increased reliability.

PROJECT STATUS
This ongoing project requires the purchase and installation of equipment for remote monitoring of the electric distribution system which contributes to fulfilling our obligation to serve electric load requirements within the City's service territory.

OPERATING BUDGET IMPACT
This project replaces existing and/or adds new infrastructure to the electric system and will not require additional operating and maintenance costs.

PROJECT FUNDING OVERVIEW

Total Project Cost	Prior Years Funding	Five-Year Plan	Remaining Needed
Ongoing	$ 5,093,723	$ 3,625,000	Ongoing

TWO-YEAR BUDGET AND FIVE-YEAR PLAN

Funding Source	FY 2026/27	FY 2027/28	FY 2028/29	FY 2029/30	FY 2030/31	Total
510 - Electric Fund	$ 685,000	$ 685,000	$ 685,000	$ 685,000	$ 885,000	$ 3,625,000
Total Funding	**$ 685,000**	**$ 685,000**	**$ 685,000**	**$ 685,000**	**$ 885,000**	**$ 3,625,000**

DISTRIBUTION LINE EXTENSIONS

PRIORITIZATION CATEGORIES

- ☐ Risk to Health, Safety and Environment
- ☐ Regulatory or Mandated Requirements
- ☒ Asset Condition, Annual Recurring Costs, and Asset Longevity
- ☐ Community Investment and Economic Prosperity
- ☒ Level and Quality of Service
- ☐ Sustainability and Conservation
- ☐ Funding Availability
- ☐ Project Readiness
- ☒ Multiple Category Benefit and Bundling Opportunities

NEW OR EXISTING

- ☒ New Infrastructure or Facility
- ☒ Existing Infrastructure or Facility



PROJECT NUMBER 470601E
PROJECT CATEGORY Electric Utility
PROJECT LOCATION Citywide
COUNCIL WARD All Wards

PROJECT DESCRIPTION
The Distribution Line Extension project includes the installation and extension of primary overhead and underground distribution lines to serve new residential, commercial, and industrial customers, as well as existing customer upgrades; installation and extension of primary overhead and underground distribution lines to serve new Electric Vehicle charging stations; and design of line extensions which complements existing facilities and considers overall area electrical load requirements.

PROJECT STATUS
This is an ongoing project to install new primary distribution lines which contributes to fulfilling the City's obligation to serve electric load requirements within the City's service territory.

OPERATING BUDGET IMPACT
This project replaces existing and/or adds new infrastructure to the electric system and will not require additional operating and maintenance costs.

PROJECT FUNDING OVERVIEW

Total Project Cost	Prior Years Funding	Five-Year Plan	Remaining Needed
Ongoing	$ 102,762,450	$ 30,856,979	Ongoing

TWO-YEAR BUDGET AND FIVE-YEAR PLAN

Funding Source	FY 2026/27	FY 2027/28	FY 2028/29	FY 2029/30	FY 2030/31	Total
510 - Electric Fund	$ 6,596,582	$ 5,901,071	$ 6,036,187	$ 6,074,978	$ 6,248,161	$ 30,856,979
Total Funding	**$ 6,596,582**	**$ 5,901,071**	**$ 6,036,187**	**$ 6,074,978**	**$ 6,248,161**	**$ 30,856,979**

ENTERPRISE OPERATION DATA MANAGEMENT SYSTEM

PRIORITIZATION CATEGORIES

- ☐ Risk to Health, Safety and Environment
- ☐ Regulatory or Mandated Requirements
- ☐ Asset Condition, Annual Recurring Costs, and Asset Longevity
- ☒ Community Investment and Economic Prosperity
- ☒ Level and Quality of Service
- ☐ Sustainability and Conservation
- ☒ Funding Availability
- ☒ Project Readiness
- ☒ Multiple Category Benefit and Bundling Opportunities

NEW OR EXISTING

- ☒ New Infrastructure or Facility
- ☐ Existing Infrastructure or Facility

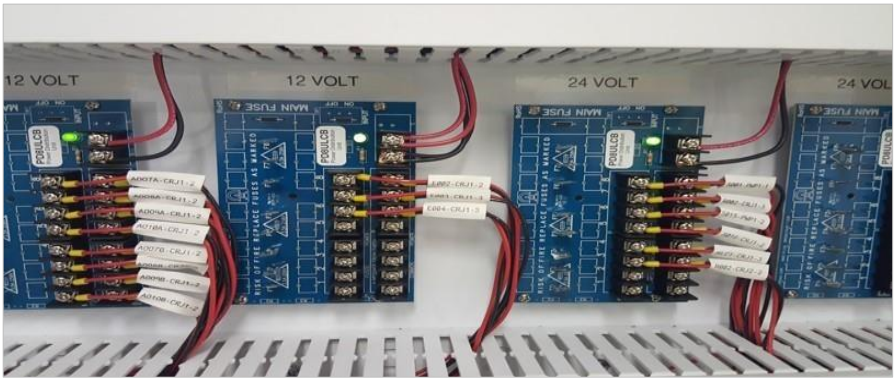

PROJECT NUMBER 470822E
PROJECT CATEGORY Electric Utility
PROJECT LOCATION Citywide
COUNCIL WARD All Wards

PROJECT DESCRIPTION
The new Operation Data Management System receives data from electric delivery and generation system instrumentation and data communication, storage, and analysis systems. The data will support advanced monitoring and control systems to improve the operational efficiency and capability of the electric delivery systems.

PROJECT STATUS
This project is ongoing. Implementation of the ODMS software was completed in 2019. Capital budget includes future costs for system upgrades and enhancements.

OPERATING BUDGET IMPACT
The Electric Fund's operating budget includes ongoing annual software license and maintenance costs of approximately $300,000/year.

PROJECT FUNDING OVERVIEW

Total Project Cost	Prior Years Funding	Five-Year Plan	Remaining Needed
Ongoing	$ 4,631,012	$ -	Ongoing

TWO-YEAR BUDGET AND FIVE-YEAR PLAN

Funding Source	FY 2026/27	FY 2027/28	FY 2028/29	FY 2029/30	FY 2030/31	Total
N/A	$ -	$ -	$ -	$ -	$ -	$ -
Total Funding	**$ -**	**$ -**	**$ -**	**$ -**	**$ -**	**$ -**

GENERAL ORDER 165 UPGRADES/LINE REBUILDS/RELOCATION - OVERHEAD

PRIORITIZATION CATEGORIES

- ☒ Risk to Health, Safety and Environment
- ☐ Regulatory or Mandated Requirements
- ☒ Asset Condition, Annual Recurring Costs, and Asset Longevity
- ☐ Community Investment and Economic Prosperity
- ☒ Level and Quality of Service
- ☐ Sustainability and Conservation
- ☐ Funding Availability
- ☐ Project Readiness
- ☒ Multiple Category Benefit and Bundling Opportunities

NEW OR EXISTING

- ☒ New Infrastructure or Facility
- ☒ Existing Infrastructure or Facility



PROJECT NUMBER 470623E
PROJECT CATEGORY Electric Utility
PROJECT LOCATION Citywide
COUNCIL WARD All Wards

PROJECT DESCRIPTION
This project includes the ongoing rehabilitation or replacement of overhead equipment identified as a result of routine facility inspections. It includes pole replacement and infrastructure rehabilitation/replacement. Priorities are established based on condition assessments and relative impact on customers and the system.

PROJECT STATUS
The ongoing replacement and upgrade of overhead facilities are prioritized based upon intrusive inspection.

OPERATING BUDGET IMPACT
This project replaces existing and/or adds new infrastructure to the electric system and will not require additional operating and maintenance costs.

PROJECT FUNDING OVERVIEW

Total Project Cost	Prior Years Funding	Five-Year Plan	Remaining Needed
Ongoing	$ 19,480,812	$ 19,015,700	Ongoing

TWO-YEAR BUDGET AND FIVE-YEAR PLAN

Funding Source	FY 2026/27	FY 2027/28	FY 2028/29	FY 2029/30	FY 2030/31	Total
510 - Electric Fund	$ 3,781,585	$ 3,781,585	$ 3,781,585	$ 3,781,585	$ 3,889,360	$ 19,015,700
Total Funding	**$ 3,781,585**	**$ 3,781,585**	**$ 3,781,585**	**$ 3,781,585**	**$ 3,889,360**	**$ 19,015,700**

GENERAL ORDER 165 UPGRADES/LINE REBUILDS/RELOCATION – UNDERGROUND

PRIORITIZATION CATEGORIES

- ☒ Risk to Health, Safety and Environment
- ☐ Regulatory or Mandated Requirements
- ☒ Asset Condition, Annual Recurring Costs, and Asset Longevity
- ☐ Community Investment and Economic Prosperity
- ☒ Level and Quality of Service
- ☐ Sustainability and Conservation
- ☐ Funding Availability
- ☐ Project Readiness
- ☒ Multiple Category Benefit and Bundling Opportunities

NEW OR EXISTING

- ☒ New Infrastructure or Facility
- ☒ Existing Infrastructure or Facility



PROJECT NUMBER 470624E
PROJECT CATEGORY Electric Utility
PROJECT LOCATION Citywide
COUNCIL WARD All Wards

PROJECT DESCRIPTION
This project includes the rehabilitation or replacement of underground equipment identified because of routine facility inspections. Priorities are established based on condition assessment and relative impact on customers and the system.

PROJECT STATUS
The ongoing replacement and upgrade of underground facilities are prioritized based upon intrusive inspection.

OPERATING BUDGET IMPACT
This project replaces existing and/or adds new infrastructure to the electric system and will not require additional operating and maintenance costs.

PROJECT FUNDING OVERVIEW

Total Project Cost	Prior Years Funding	Five-Year Plan	Remaining Needed
Ongoing	$ 3,883,410	$ 8,500,000	Ongoing

TWO-YEAR BUDGET AND FIVE-YEAR PLAN

Funding Source	FY 2026/27	FY 2027/28	FY 2028/29	FY 2029/30	FY 2030/31	Total
510 - Electric Fund	$ 1,500,000	$ 1,700,000	$ 1,700,000	$ 1,700,000	$ 1,900,000	$ 8,500,000
Total Funding	**$ 1,500,000**	**$ 1,700,000**	**$ 1,700,000**	**$ 1,700,000**	**$ 1,900,000**	**$ 8,500,000**

GENERATING STATION

PRIORITIZATION CATEGORIES

- ☒ Risk to Health, Safety and Environment
- ☐ Regulatory or Mandated Requirements
- ☒ Asset Condition, Annual Recurring Costs, and Asset Longevity
- ☐ Community Investment and Economic Prosperity
- ☒ Level and Quality of Service
- ☐ Sustainability and Conservation
- ☐ Funding Availability
- ☐ Project Readiness
- ☐ Multiple Category Benefit and Bundling Opportunities

NEW OR EXISTING

- ☐ New Infrastructure or Facility
- ☒ Existing Infrastructure or Facility



PROJECT NUMBER 470627E
PROJECT CATEGORY Electric Utility
PROJECT LOCATION Citywide
COUNCIL WARD All Wards

PROJECT DESCRIPTION
This project includes needed power plant facility upgrades and equipment replacements identified during routine annual inspections. Replacement of major components and upgrades are necessary to provide reliable power. Priorities are determined by condition-based assessments and impact to the plant's overall reliability.

PROJECT STATUS
Ongoing replacement and upgrades of plant equipment are based on annual condition assessments.

OPERATING BUDGET IMPACT
This project replaces existing and/or adds new infrastructure to the electric system and will not require additional operating and maintenance costs.

PROJECT FUNDING OVERVIEW

Total Project Cost	Prior Years Funding	Five-Year Plan	Remaining Needed
Ongoing	$ 22,112,981	$ 38,650,000	Ongoing

TWO-YEAR BUDGET AND FIVE-YEAR PLAN

Funding Source	FY 2026/27	FY 2027/28	FY 2028/29	FY 2029/30	FY 2030/31	Total
510 - Electric Fund	$ 13,150,000	$ 6,600,000	$ 7,350,000	$ 11,200,000	$ 350,000	$ 38,650,000
Total Funding	**$ 13,150,000**	**$ 6,600,000**	**$ 7,350,000**	**$ 11,200,000**	**$ 350,000**	**$ 38,650,000**

HUNTER SUBSTATION

PRIORITIZATION CATEGORIES

- ☐ Risk to Health, Safety and Environment
- ☐ Regulatory or Mandated Requirements
- ☒ Asset Condition, Annual Recurring Costs, and Asset Longevity
- ☒ Community Investment and Economic Prosperity
- ☒ Level and Quality of Service
- ☒ Sustainability and Conservation
- ☐ Funding Availability
- ☐ Project Readiness
- ☒ Multiple Category Benefit and Bundling Opportunities

NEW OR EXISTING

- ☒ New Infrastructure or Facility
- ☐ Existing Infrastructure or Facility



PROJECT NUMBER 470699E **COUNCIL WARD** 2
PROJECT CATEGORY Electric Utility
PROJECT LOCATION 1731 Marlborough Avenue

PROJECT DESCRIPTION

The project objective is to replace the existing Hunter Substation, which serves approximately 4,700 customers in the Hunter Industrial Park and Northside communities. This project aims to address the aging infrastructure of the existing Hunter Substation, commissioned in 1960 and now one of the oldest in the Riverside Public Utilities (RPU) electric system. This new facility, boasting advanced technology and increased capacity, will connect to four existing 69kV sub-transmission lines and 20-12kV distribution lines. Additionally, it includes the decommissioning and removal of the existing substation.

The need for this upgrade is underscored by the substation's equipment age, averaging over 40 years, and the risks posed by its outdated 69kV bus structures and configuration. This project is in line with the 2023 Local Hazard Mitigation Plan for the City of Riverside and Riverside County, aiming to enhance electrical service reliability, safety, and efficiency.

PROJECT STATUS

The project has been awarded to a design-built contractor and is currently in the construction phase. The majority of the equipment has been installed. The next phase will include installation of the above-grade structures, followed by wiring and testing. Estimated completion date for the project is December 2027.

OPERATING BUDGET IMPACT

The project replaces existing and/or adds new infrastructure to the electric system and will not require additional operating and maintenance costs.

PROJECT FUNDING OVERVIEW

Total Project Cost	Prior Years Funding	Five-Year Plan	Remaining Needed
$ 62,327,000	$ 62,327,000	$ -	$ -

TWO-YEAR BUDGET AND FIVE-YEAR PLAN

Funding Source	FY 2026/27	FY 2027/28	FY 2028/29	FY 2029/30	FY 2030/31	Total
N/A	$ -	$ -	$ -	$ -	$ -	$ -
Total Funding	**$ -**	**$ -**	**$ -**	**$ -**	**$ -**	**$ -**

LAND MOBILE RADIO

PRIORITIZATION CATEGORIES

- ☒ Risk to Health, Safety and Environment
- ☐ Regulatory or Mandated Requirements
- ☐ Asset Condition, Annual Recurring Costs, and Asset Longevity
- ☒ Community Investment and Economic Prosperity
- ☒ Level and Quality of Service
- ☐ Sustainability and Conservation
- ☒ Funding Availability
- ☒ Project Readiness
- ☒ Multiple Category Benefit and Bundling Opportunities

NEW OR EXISTING

- ☒ New Infrastructure or Facility
- ☐ Existing Infrastructure or Facility

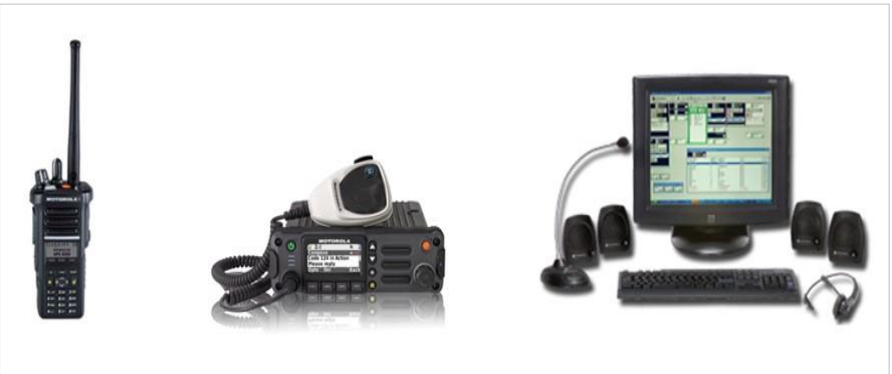

PROJECT NUMBER 470827E
PROJECT CATEGORY Electric Utility
PROJECT LOCATION Citywide
COUNCIL WARD All Wards

PROJECT DESCRIPTION
Land Mobile Radio (LMR) is a wireless communications system intended for use by terrestrial users in vehicles (mobiles) or on foot (portables). The new system capitalizes on digital technology known as frequency division multiple access. The LMR system supplies new antennas to provide citywide coverage; provides a new dispatcher console; coexists with the current analog LMR system; supports narrow channels; enables modes of operation for both analog and digital modulations as well as allows for multiple talk groups; and supports private calling for increased safety in the field.

PROJECT STATUS
Phase I of the installation and integration of the new system is complete. The project will shift into the second phase to sustain the land-mobile radio system Citywide and is due to be completed in Summer of 2031. Capital budget includes future costs for system upgrades and enhancements.

OPERATING BUDGET IMPACT
Following the second phase of completion, there will be no significant fiscal impact outside of the annual software license and maintenance costs which will be included in Energy Delivery operating budget. Estimated amount of operating budget impacts will be evaluated closer to project completion.

PROJECT FUNDING OVERVIEW

Total Project Cost	Prior Years Funding	Five-Year Plan	Remaining Needed
$ 4,925,179	$ 3,442,393	$ 1,482,786	$ -

TWO-YEAR BUDGET AND FIVE-YEAR PLAN

Funding Source	FY 2026/27	FY 2027/28	FY 2028/29	FY 2029/30	FY 2030/31	Total
510 - Electric Fund	$ -	$ -	$ 365,672	$ 376,094	$ 741,020	$ 1,482,786
Total Funding	**$ -**	**$ -**	**$ 365,672**	**$ 376,094**	**$ 741,020**	**$ 1,482,786**

LINE REBUILDS

PRIORITIZATION CATEGORIES

- ☒ Risk to Health, Safety and Environment
- ☐ Regulatory or Mandated Requirements
- ☒ Asset Condition, Annual Recurring Costs, and Asset Longevity
- ☐ Community Investment and Economic Prosperity
- ☒ Level and Quality of Service
- ☐ Sustainability and Conservation
- ☐ Funding Availability
- ☐ Project Readiness
- ☒ Multiple Category Benefit and Bundling Opportunities

NEW OR EXISTING

- ☒ New Infrastructure or Facility
- ☒ Existing Infrastructure or Facility



PROJECT NUMBER 470603E
PROJECT CATEGORY Electric Utility
PROJECT LOCATION Citywide
COUNCIL WARD All Wards

PROJECT DESCRIPTION
Line Rebuilds replace aging and end-of-life distribution line equipment and reconfiguration of overhead and underground distribution lines. The project includes the replacement of older oil-filled underground switches. These projects reduce hazardous materials, add system flexibility, and support electric reliability goals.

PROJECT STATUS
The ongoing analysis and system need gauge the prioritization and replacement of primary distribution lines, which continue to fulfill our obligation to serve electric load requirements within the city service territory.

OPERATING BUDGET IMPACT
This project replaces existing and/or adds new infrastructure to the electric system and will not require additional operating and maintenance costs.

PROJECT FUNDING OVERVIEW

Total Project Cost	Prior Years Funding	Five-Year Plan	Remaining Needed
Ongoing	$ 39,614,698	$ 32,208,434	Ongoing

TWO-YEAR BUDGET AND FIVE-YEAR PLAN

Funding Source	FY 2026/27	FY 2027/28	FY 2028/29	FY 2029/30	FY 2030/31	Total
510 - Electric Fund	$ 6,357,922	$ 6,437,424	$ 6,437,424	$ 6,437,424	$ 6,538,240	$ 32,208,434
Total Funding	**$ 6,357,922**	**$ 6,437,424**	**$ 6,437,424**	**$ 6,437,424**	**$ 6,538,240**	**$ 32,208,434**

MAJOR 4-12 KV CONVERSION

PRIORITIZATION CATEGORIES

- ☐ Risk to Health, Safety and Environment
- ☐ Regulatory or Mandated Requirements
- ☒ Asset Condition, Annual Recurring Costs, and Asset Longevity
- ☐ Community Investment and Economic Prosperity
- ☒ Level and Quality of Service
- ☐ Sustainability and Conservation
- ☐ Funding Availability
- ☐ Project Readiness
- ☒ Multiple Category Benefit and Bundling Opportunities

NEW OR EXISTING

- ☒ New Infrastructure or Facility
- ☒ Existing Infrastructure or Facility



PROJECT NUMBER 470644E
PROJECT CATEGORY Electric Utility
PROJECT LOCATION Citywide
COUNCIL WARD All Wards

PROJECT DESCRIPTION
This project continues the upgrades of aging and obsolete lower voltage electric distribution facilities (4kV) to higher distribution voltage (12kV). Projects are currently in the Magnolia and Plaza service areas. These conversions are optimized to improve system capacity and efficiency.

PROJECT STATUS
The ongoing replacement of 4kV distribution facilities are prioritized based upon outage analysis as well as age and obsolescence of existing equipment to continue to provide electric reliability to customers.

OPERATING BUDGET IMPACT
This project replaces existing and/or adds new infrastructure to the electric system and will not require additional operating and maintenance costs.

PROJECT FUNDING OVERVIEW

Total Project Cost	Prior Years Funding	Five-Year Plan	Remaining Needed
Ongoing	$46,524,152	$ 28,378,295	Ongoing

TWO-YEAR BUDGET AND FIVE-YEAR PLAN

Funding Source	FY 2026/27	FY 2027/28	FY 2028/29	FY 2029/30	FY 2030/31	Total
510 - Electric Fund	$ 5,099,092	$ 5,778,628	$ 5,778,628	$ 5,778,628	$ 5,943,319	$ 28,378,295
Total Funding	**$ 5,099,092**	**$ 5,778,628**	**$ 5,778,628**	**$ 5,778,628**	**$ 5,943,319**	**$ 28,378,295**

MAJOR FEEDERS

PRIORITIZATION CATEGORIES

- ☐ Risk to Health, Safety and Environment
- ☐ Regulatory or Mandated Requirements
- ☒ Asset Condition, Annual Recurring Costs, and Asset Longevity
- ☐ Community Investment and Economic Prosperity
- ☒ Level and Quality of Service
- ☐ Sustainability and Conservation
- ☐ Funding Availability
- ☐ Project Readiness
- ☒ Multiple Category Benefit and Bundling Opportunities

NEW OR EXISTING

- ☒ New Infrastructure or Facility
- ☒ Existing Infrastructure or Facility



PROJECT NUMBER 470633E
PROJECT CATEGORY Electric Utility
PROJECT LOCATION Citywide
COUNCIL WARD All Wards

PROJECT DESCRIPTION
This project constructs major overhead and underground feeders for electric capacity in various locations throughout the City. These feeders are associated with substation transformer additions and extensions to areas of major load increases. Designs complement existing facilities and improve overall system operations.

PROJECT STATUS
The ongoing installation of new primary feeder lines contribute to fulfilling the City's obligation to serve electric load requirements within the City's service territory.

OPERATING BUDGET IMPACT
This project replaces existing and/or adds new infrastructure to the electric system and will not require additional operating and maintenance costs.

PROJECT FUNDING OVERVIEW

Total Project Cost	Prior Years Funding	Five-Year Plan	Remaining Needed
Ongoing	$ 26,715,460	$ 1,450,000	Ongoing

TWO-YEAR BUDGET AND FIVE-YEAR PLAN

Funding Source	FY 2026/27	FY 2027/28	FY 2028/29	FY 2029/30	FY 2030/31	Total
510 - Electric Fund	$ 250,000	$ 300,000	$ 300,000	$ 300,000	$ 300,000	$ 1,450,000
Total Funding	**$ 250,000**	**$ 300,000**	**$ 300,000**	**$ 300,000**	**$ 300,000**	**$ 1,450,000**

MAJOR OVERHEAD / UNDERGROUND CONVERSIONS

PRIORITIZATION CATEGORIES

- ☐ Risk to Health, Safety and Environment
- ☐ Regulatory or Mandated Requirements
- ☒ Asset Condition, Annual Recurring Costs, and Asset Longevity
- ☐ Community Investment and Economic Prosperity
- ☒ Level and Quality of Service
- ☐ Sustainability and Conservation
- ☐ Funding Availability
- ☐ Project Readiness
- ☒ Multiple Category Benefit and Bundling Opportunities

NEW OR EXISTING

- ☒ New Infrastructure or Facility
- ☐ Existing Infrastructure or Facility



PROJECT NUMBER 470619E
PROJECT CATEGORY Electric Utility
PROJECT LOCATION Citywide
COUNCIL WARD All Wards

PROJECT DESCRIPTION
These potential conversions optimize opportunities to place various overhead facilities underground on a limited basis as a part of other projects. Electric facilities are evaluated for improvements to capacity, configuration, and integration with surrounding facilities during design.

PROJECT STATUS
The ongoing relocation and upgrade of facilities is driven by Public Works street projects which contribute to fulfilling the City's obligation to serve electric load requirements within the City's service territory.

OPERATING BUDGET IMPACT
This project replaces existing and/or adds new infrastructure to the electric system and will not require additional operating and maintenance costs.

PROJECT FUNDING OVERVIEW

Total Project Cost	Prior Years Funding	Five-Year Plan	Remaining Needed
Ongoing	$ 35,765,502	$ 1,400,000	Ongoing

TWO-YEAR BUDGET AND FIVE-YEAR PLAN

Funding Source	FY 2026/27	FY 2027/28	FY 2028/29	FY 2029/30	FY 2030/31	Total
510 - Electric Fund	$ 200,000	$ 300,000	$ 300,000	$ 300,000	$ 300,000	$ 1,400,000
Total Funding	**$ 200,000**	**$ 300,000**	**$ 300,000**	**$ 300,000**	**$ 300,000**	**$ 1,400,000**

MAJOR STREETLIGHT PROJECTS

PRIORITIZATION CATEGORIES

- ☒ Risk to Health, Safety and Environment
- ☐ Regulatory or Mandated Requirements
- ☐ Asset Condition, Annual Recurring Costs, and Asset Longevity
- ☐ Community Investment and Economic Prosperity
- ☒ Level and Quality of Service
- ☐ Sustainability and Conservation
- ☐ Funding Availability
- ☐ Project Readiness
- ☒ Multiple Category Benefit and Bundling Opportunities

NEW OR EXISTING

- ☒ New Infrastructure or Facility
- ☐ Existing Infrastructure or Facility



PROJECT NUMBER 470637E
PROJECT CATEGORY Electric Utility
PROJECT LOCATION Citywide
COUNCIL WARD All Wards

PROJECT DESCRIPTION
Major Streetlight Projects relocate and optimize streetlights for road widening projects and as a part of other projects. Project priorities are primarily driven by Public Works schedules and include citywide light emitting diode (LED) streetlight retrofit.

PROJECT STATUS
The ongoing relocation and upgrade of streetlight facilities is primarily driven by Public Works street projects which contribute to fulfilling the City's obligation to serve electric load requirements within the City's service territory.

OPERATING BUDGET IMPACT
This project replaces existing and/or adds new infrastructure to the electric system and will not require additional operating and maintenance costs.

PROJECT FUNDING OVERVIEW

Total Project Cost	Prior Years Funding	Five-Year Plan	Remaining Needed
Ongoing	$ 27,837,726	$ 4,773,865	Ongoing

TWO-YEAR BUDGET AND FIVE-YEAR PLAN

Funding Source	FY 2026/27	FY 2027/28	FY 2028/29	FY 2029/30	FY 2030/31	Total
510 - Electric Fund	$ 794,773	$ 994,773	$ 994,773	$ 994,773	$ 994,773	$ 4,773,865
Total Funding	**$ 794,773**	**$ 994,773**	**$ 994,773**	**$ 994,773**	**$ 994,773**	**$ 4,773,865**

MAJOR TRACT DISTRIBUTION

PRIORITIZATION CATEGORIES

- ☐ Risk to Health, Safety and Environment
- ☐ Regulatory or Mandated Requirements
- ☒ Asset Condition, Annual Recurring Costs, and Asset Longevity
- ☐ Community Investment and Economic Prosperity
- ☒ Level and Quality of Service
- ☐ Sustainability and Conservation
- ☐ Funding Availability
- ☐ Project Readiness
- ☒ Multiple Category Benefit and Bundling Opportunities

NEW OR EXISTING

- ☒ New Infrastructure or Facility
- ☐ Existing Infrastructure or Facility



PROJECT NUMBER 470626E
PROJECT CATEGORY Electric Utility
PROJECT LOCATION Citywide
COUNCIL WARD All Wards

PROJECT DESCRIPTION
Construct electric distribution feeders within new residential and commercial tract developments. Additions are designed to supply new customers. These extensions are designed to complement existing facilities and improve overall system operation.

PROJECT STATUS
Ongoing installation of new primary distribution lines within major tract developments which contributes to fulfilling our obligation to serve electric load requirements within the city service area.

OPERATING BUDGET IMPACT
This project replaces existing and/or adds new infrastructure to the electric system and will not require additional operating and maintenance costs.

PROJECT FUNDING OVERVIEW

Total Project Cost	Prior Years Funding	Five-Year Plan	Remaining Needed
Ongoing	$ 18,017,021	$ -	Ongoing

TWO-YEAR BUDGET AND FIVE-YEAR PLAN

Funding Source	FY 2026/27	FY 2027/28	FY 2028/29	FY 2029/30	FY 2030/31	Total
N/A	$ -	$ -	$ -	$ -	$ -	$ -
Total Funding	**$ -**	**$ -**	**$ -**	**$ -**	**$ -**	**$ -**

MAJOR TRANSMISSION LINE PROJECTS

PRIORITIZATION CATEGORIES

- ☐ Risk to Health, Safety and Environment
- ☐ Regulatory or Mandated Requirements
- ☒ Asset Condition, Annual Recurring Costs, and Asset Longevity
- ☐ Community Investment and Economic Prosperity
- ☒ Level and Quality of Service
- ☐ Sustainability and Conservation
- ☐ Funding Availability
- ☐ Project Readiness
- ☒ Multiple Category Benefit and Bundling Opportunities

NEW OR EXISTING

- ☒ New Infrastructure or Facility
- ☒ Existing Infrastructure or Facility



PROJECT NUMBER 470620E
PROJECT CATEGORY Electric Utility
PROJECT LOCATION Citywide
COUNCIL WARD All Wards

PROJECT DESCRIPTION
Major Transmission Line Projects include modifications and relocations of 69kV transmission lines associated with substation power transformer additions. Transmission facilities are evaluated for improvements and system efficiencies during the design of all projects. Parallel facilities on the same route are also considered for improvement to reduce the life cycle cost.

PROJECT STATUS
The ongoing relocation and upgrade of transmission line facilities is driven by substation power transformer additions that contribute to fulfilling the City's obligation to serve electric load requirements within the City's service territory.

OPERATING BUDGET IMPACT
This project replaces existing and/or adds new infrastructure to the electric system and will not require additional operating and maintenance costs.

PROJECT FUNDING OVERVIEW

Total Project Cost	Prior Years Funding	Five-Year Plan	Remaining Needed
Ongoing	$ 2,613,737	$ 1,900,000	Ongoing

TWO-YEAR BUDGET AND FIVE-YEAR PLAN

Funding Source	FY 2026/27	FY 2027/28	FY 2028/29	FY 2029/30	FY 2030/31	Total
510 - Electric Fund	$ 300,000	$ 400,000	$ 400,000	$ 400,000	$ 400,000	$ 1,900,000
Total Funding	**$ 300,000**	**$ 400,000**	**$ 400,000**	**$ 400,000**	**$ 400,000**	**$ 1,900,000**

METERS

PRIORITIZATION CATEGORIES

- ☐ Risk to Health, Safety and Environment
- ☐ Regulatory or Mandated Requirements
- ☒ Asset Condition, Annual Recurring Costs, and Asset Longevity
- ☐ Community Investment and Economic Prosperity
- ☒ Level and Quality of Service
- ☐ Sustainability and Conservation
- ☐ Funding Availability
- ☐ Project Readiness
- ☒ Multiple Category Benefit and Bundling Opportunities

NEW OR EXISTING

- ☒ New Infrastructure or Facility
- ☒ Existing Infrastructure or Facility



PROJECT NUMBER 470613E
PROJECT CATEGORY Electric Utility
PROJECT LOCATION Citywide
COUNCIL WARD All Wards

PROJECT DESCRIPTION
The Meter Project includes the purchase and installation of meter equipment for new residential, commercial, and industrial services. This also includes the purchase and installation of meters to replace existing meters that are inoperable or damaged.

PROJECT STATUS
Meters are upgraded to current standards when serviced, inspected, or replaced. The ongoing purchase and installation of meter equipment contributes to fulfilling accuracy in customer consumption and our obligation to serve electric load requirements within the City's service territory.

OPERATING BUDGET IMPACT
This project replaces existing and/or adds new infrastructure to the electric system and will not require additional operating and maintenance costs.

PROJECT FUNDING OVERVIEW

Total Project Cost	Prior Years Funding	Five-Year Plan	Remaining Needed
Ongoing	$ 12,554,290	$ 2,500,000	Ongoing

TWO-YEAR BUDGET AND FIVE-YEAR PLAN

Funding Source	FY 2026/27	FY 2027/28	FY 2028/29	FY 2029/30	FY 2030/31	Total
510 - Electric Fund	$ 500,000	$ 500,000	$ 500,000	$ 500,000	$ 500,000	$ 2,500,000
Total Funding	**$ 500,000**	**$ 500,000**	**$ 500,000**	**$ 500,000**	**$ 500,000**	**$ 2,500,000**

MOBILE APPLICATIONS

PRIORITIZATION CATEGORIES

- ☒ Risk to Health, Safety and Environment
- ☐ Regulatory or Mandated Requirements
- ☐ Asset Condition, Annual Recurring Costs, and Asset Longevity
- ☒ Community Investment and Economic Prosperity
- ☒ Level and Quality of Service
- ☐ Sustainability and Conservation
- ☒ Funding Availability
- ☒ Project Readiness
- ☒ Multiple Category Benefit and Bundling Opportunities

NEW OR EXISTING

- ☒ New Infrastructure or Facility
- ☐ Existing Infrastructure or Facility



PROJECT NUMBER 470831E
PROJECT CATEGORY Electric Utility
PROJECT LOCATION Citywide
COUNCIL WARD All Wards

PROJECT DESCRIPTION
Mobile Apps increase operational efficiency and safety by providing real-time information to field personnel when and where they need it; ensure system configuration and status is always known by the personnel operating the system; reduce the need for paper-based maps, plans, and work orders; reduce the as built record-keeping effort; and enable field operation personnel to share real-time information with system operators and engineers.

PROJECT STATUS
This project is currently on hold with an estimated completion date of Summer 2031.

OPERATING BUDGET IMPACT
Following the completion of the project, there will be no significant fiscal impact outside of the annual software license and maintenance costs which will be included in Electric's operating budgets. Estimated amount of operating budget impacts will be evaluated closer to project completion.

PROJECT FUNDING OVERVIEW

Total Project Cost	Prior Years Funding	Five-Year Plan	Remaining Needed
$ 2,717,870	$ 2,076,850	$ 641,020	$ -

TWO-YEAR BUDGET AND FIVE-YEAR PLAN

Funding Source	FY 2026/27	FY 2027/28	FY 2028/29	FY 2029/30	FY 2030/31	Total
510 - Electric Fund	$ -	$ -	$ -	$ -	$ 641,020	$ 641,020
Total Funding	**$ -**	**$ -**	**$ -**	**$ -**	**$ 641,020**	**$ 641,020**

NEIGHBORHOOD STREETLIGHT RETROFIT

PRIORITIZATION CATEGORIES

- ☒ Risk to Health, Safety and Environment
- ☐ Regulatory or Mandated Requirements
- ☐ Asset Condition, Annual Recurring Costs, and Asset Longevity
- ☐ Community Investment and Economic Prosperity
- ☒ Level and Quality of Service
- ☐ Sustainability and Conservation
- ☐ Funding Availability
- ☐ Project Readiness
- ☒ Multiple Category Benefit and Bundling Opportunities

NEW OR EXISTING

- ☒ New Infrastructure or Facility
- ☒ Existing Infrastructure or Facility



PROJECT NUMBER 470638E
PROJECT CATEGORY Electric Utility
PROJECT LOCATION Citywide
COUNCIL WARD All Wards

PROJECT DESCRIPTION
The Neighborhood Streetlight Retrofit continues the installation of new concrete streetlight standards, light fixtures, and power feeds in the greater Wood Streets area. Standards and fixtures are replicas of the 90-year-old historical streetlight system. New fixtures are light-emitting diode (LED) lights for increased energy efficiency.

PROJECT STATUS
The project includes ongoing installation and modernization of streetlight facilities in designated areas.

OPERATING BUDGET IMPACT
This project replaces existing and/or adds new infrastructure to the electric system and will not require additional operating and maintenance costs.

PROJECT FUNDING OVERVIEW

Total Project Cost	Prior Years Funding	Five-Year Plan	Remaining Needed
Ongoing	$ 16,112,120	$ 7,446,897	Ongoing

TWO-YEAR BUDGET AND FIVE-YEAR PLAN

Funding Source	FY 2026/27	FY 2027/28	FY 2028/29	FY 2029/30	FY 2030/31	Total
510 - Electric Fund	$ 1,480,938	$ 1,480,938	$ 1,480,938	$ 1,480,938	$ 1,523,145	$ 7,446,897
Total Funding	**$ 1,480,938**	**$ 1,480,938**	**$ 1,480,938**	**$ 1,480,938**	**$ 1,523,145**	**$ 7,446,897**

NETWORK COMMUNICATION SYSTEM

PRIORITIZATION CATEGORIES

- ☐ Risk to Health, Safety and Environment
- ☐ Regulatory or Mandated Requirements
- ☐ Asset Condition, Annual Recurring Costs, and Asset Longevity
- ☒ Community Investment and Economic Prosperity
- ☒ Level and Quality of Service
- ☐ Sustainability and Conservation
- ☒ Funding Availability
- ☒ Project Readiness
- ☒ Multiple Category Benefit and Bundling Opportunities

NEW OR EXISTING

- ☒ New Infrastructure or Facility
- ☐ Existing Infrastructure or Facility



PROJECT NUMBER 470826E
PROJECT CATEGORY Electric Utility
PROJECT LOCATION Citywide
COUNCIL WARD All Wards

PROJECT DESCRIPTION
The Network Communications Systems Project will upgrade and create redundancies in the communication network to improve the communication backbone and improve system functionality, efficiency, reliability, and cybersecurity. The expected life cycle for these upgrades is about 15 to 20 years.

PROJECT STATUS
The project is in its final phases. There will be continued analysis throughout the upgrade to ensure all redundances needed for the Network Communications Systems are included in this project through Summer 2030.

OPERATING BUDGET IMPACT
Following the completion of the project, there will be no significant fiscal impact outside of the annual software license and maintenance costs which will be included in Electric's operating budgets. Estimated amount of operating budget impacts will be evaluated closer to project completion.

PROJECT FUNDING OVERVIEW

Total Project Cost	Prior Years Funding	Five-Year Plan	Remaining Needed
$ 10,134,533	$ 4,833,186	$ 5,301,347	$ -

TWO-YEAR BUDGET AND FIVE-YEAR PLAN

Funding Source	FY 2026/27	FY 2027/28	FY 2028/29	FY 2029/30	FY 2030/31	Total
510 - Electric Fund	$ 1,324,472	$ 1,362,220	$ 1,288,960	$ 1,325,695	$ -	$ 5,301,347
Total Funding	**$ 1,324,472**	**$ 1,362,220**	**$ 1,288,960**	**$ 1,325,695**	**$ -**	**$ 5,301,347**

OPERATIONAL TECHNOLOGY GOVERNANCE

PRIORITIZATION CATEGORIES

- ☐ Risk to Health, Safety and Environment
- ☐ Regulatory or Mandated Requirements
- ☐ Asset Condition, Annual Recurring Costs, and Asset Longevity
- ☒ Community Investment and Economic Prosperity
- ☒ Level and Quality of Service
- ☐ Sustainability and Conservation
- ☒ Funding Availability
- ☒ Project Readiness
- ☒ Multiple Category Benefit and Bundling Opportunities

NEW OR EXISTING

- ☐ New Infrastructure or Facility
- ☒ Existing Infrastructure or Facility



PROJECT NUMBER 470824E
PROJECT CATEGORY Electric Utility
PROJECT LOCATION Citywide
COUNCIL WARD All Wards

PROJECT DESCRIPTION
The Operational Technology Governance project includes planning, management, internal controls, and cyber and physical security improvements, as well as planning and implementation of a Security Risk Management Program which includes policies, tools required to monitor irregular activities on the network, and endpoint devices to facilitate proactive response to malicious activities or security-related performance issues.

PROJECT STATUS
Equipment and software solutions for cyber and physical security issues are identified through new biannual assessments. This project is being done in conjunction with RPU/Water for a better coordinated and more efficient implementation process.

OPERATING BUDGET IMPACT
This project updates existing software solutions and will not require additional operating and maintenance costs.

PROJECT FUNDING OVERVIEW

Total Project Cost	Prior Years Funding	Five-Year Plan	Remaining Needed
Ongoing	$ 3,373,209	$ 1,435,108	Ongoing

TWO-YEAR BUDGET AND FIVE-YEAR PLAN

Funding Source	FY 2026/27	FY 2027/28	FY 2028/29	FY 2029/30	FY 2030/31	Total
510 - Electric Fund	$ 382,108	$ 395,848	$ 322,555	$ 334,597	$ -	$ 1,435,108
Total Funding	**$ 382,108**	**$ 395,848**	**$ 322,555**	**$ 334,597**	**$ -**	**$ 1,435,108**

OUTAGE MANAGEMENT SYSTEM

PRIORITIZATION CATEGORIES

- ☐ Risk to Health, Safety and Environment
- ☐ Regulatory or Mandated Requirements
- ☐ Asset Condition, Annual Recurring Costs, and Asset Longevity
- ☐ Community Investment and Economic Prosperity
- ☒ Level and Quality of Service
- ☐ Sustainability and Conservation
- ☐ Funding Availability
- ☒ Project Readiness
- ☒ Multiple Category Benefit and Bundling Opportunities

NEW OR EXISTING

- ☒ New Infrastructure or Facility
- ☐ Existing Infrastructure or Facility



PROJECT NUMBER 470829E
PROJECT CATEGORY Electric Utility
PROJECT LOCATION Citywide
COUNCIL WARD All Wards

PROJECT DESCRIPTION
The Outage Management System (OMS) will provide a technology solution and system that enhances operational efficiency, improves productivity and reliability, and increases customer engagement and satisfaction. This system provides real-time visibility to the electric grid and systems, which will reduce the time it takes dispatches and troubleshooters to locate outages and causes. OMS will integrate with the Advanced Distribution Management System (ADMS) to gain additional efficiencies on the electric system to increase reliability.

PROJECT STATUS
The project is currently on hold pending the completion of GIS updates which is anticipated to be completed in the first quarter of 2027. After that completion, the estimated completion date for the OMS is Summer 2031.

OPERATING BUDGET IMPACT
Following the OMS implementation, there will be no significant fiscal impact outside of the annual software license and maintenance costs which will be included in Energy Delivery's operating budgets. Estimated amount of operating budget impacts will be evaluated closer to project completion.

PROJECT FUNDING OVERVIEW

Total Project Cost	Prior Years Funding	Five-Year Plan	Remaining Needed
$ 5,057,482	$ 2,661,953	$ 2,395,529	$ -

TWO-YEAR BUDGET AND FIVE-YEAR PLAN

Funding Source	FY 2026/27	FY 2027/28	FY 2028/29	FY 2029/30	FY 2030/31	Total
510 - Electric Fund	$ -	$ -	$ 776,178	$ 798,300	$ 821,051	$ 2,395,529
Total Funding	**$ -**	**$ -**	**$ 776,178**	**$ 798,300**	**$ 821,051**	**$ 2,395,529**

RIVERSIDE TRANSMISSION RELIABILITY PROJECT (RTRP)

PRIORITIZATION CATEGORIES

- ☐ Risk to Health, Safety and Environment
- ☐ Regulatory or Mandated Requirements
- ☒ Asset Condition, Annual Recurring Costs, and Asset Longevity
- ☐ Community Investment and Economic Prosperity
- ☒ Level and Quality of Service
- ☐ Sustainability and Conservation
- ☐ Funding Availability
- ☐ Project Readiness
- ☒ Multiple Category Benefit and Bundling Opportunities

NEW OR EXISTING

- ☒ New Infrastructure or Facility
- ☐ Existing Infrastructure or Facility



PROJECT NUMBER 470685E
PROJECT CATEGORY Electric Utility
PROJECT LOCATION Citywide
COUNCIL WARD All Wards

PROJECT DESCRIPTION
RTRP is a joint project with Southern California Edison (SCE) to address the electrical capacity and reliability needs of the City.

PROJECT STATUS
The project consists of multiple phases, with some currently under construction and others still in the design stage. A substantial amount of equipment has been ordered and is now in manufacturing, and a contract has been awarded for grading of the Wilderness Substation. The estimated completion date is Summer 2031.

OPERATING BUDGET IMPACT
Operating budget impacts will be evaluated closer to project completion.

PROJECT FUNDING OVERVIEW

Total Project Cost	Prior Years Funding*	Five-Year Plan	Remaining Needed
$ 228,647,449	$ 228,647,449	$ -	$ -

TWO-YEAR BUDGET AND FIVE-YEAR PLAN

Funding Source	FY 2026/27	FY 2027/28	FY 2028/29	FY 2029/30	FY 2030/31	Total
N/A	$ -	$ -	$ -	$ -	$ -	$ -
Total Funding	**$ -**	**$ -**	**$ -**	**$ -**	**$ -**	**$ -**

** The total life to date budget amount includes capitalized interest.*

SERVICES

PRIORITIZATION CATEGORIES

- ☐ Risk to Health, Safety and Environment
- ☐ Regulatory or Mandated Requirements
- ☒ Asset Condition, Annual Recurring Costs, and Asset Longevity
- ☐ Community Investment and Economic Prosperity
- ☒ Level and Quality of Service
- ☐ Sustainability and Conservation
- ☐ Funding Availability
- ☐ Project Readiness
- ☒ Multiple Category Benefit and Bundling Opportunities

NEW OR EXISTING

- ☒ New Infrastructure or Facility
- ☒ Existing Infrastructure or Facility



PROJECT NUMBER 470615E
PROJECT CATEGORY Electric Utility
PROJECT LOCATION Citywide
COUNCIL WARD All Wards

PROJECT DESCRIPTION
This project includes the ongoing installation of new services to residential, commercial, and industrial customers. Additionally, it includes upgraded services to existing customers with increased electrical requirements. Service designs complement existing facilities and consider overall area electrical load requirements.

PROJECT STATUS
This is an ongoing project for the purchase of electric service equipment, which contributes to fulfilling the City's obligation to serve electric load requirements within the City's service territory.

OPERATING BUDGET IMPACT
This project replaces existing and/or adds new infrastructure to the electric system and will not require additional operating and maintenance costs.

PROJECT FUNDING OVERVIEW

Total Project Cost	Prior Years Funding	Five-Year Plan	Remaining Needed
Ongoing	$ 12,088,159	$ 2,000,000	Ongoing

TWO-YEAR BUDGET AND FIVE-YEAR PLAN

Funding Source	FY 2026/27	FY 2027/28	FY 2028/29	FY 2029/30	FY 2030/31	Total
510 - Electric Fund	$ 400,000	$ 400,000	$ 400,000	$ 400,000	$ 400,000	$ 2,000,000
Total Funding	**$ 400,000**	**$ 400,000**	**$ 400,000**	**$ 400,000**	**$ 400,000**	**$ 2,000,000**

SOUTHERN CALIFORNIA EDISON (SCE) CONDEMNATION COSTS

PRIORITIZATION CATEGORIES

- ☐ Risk to Health, Safety and Environment
- ☐ Regulatory or Mandated Requirements
- ☐ Asset Condition, Annual Recurring Costs, and Asset Longevity
- ☒ Community Investment and Economic Prosperity
- ☐ Level and Quality of Service
- ☐ Sustainability and Conservation
- ☐ Funding Availability
- ☐ Project Readiness
- ☐ Multiple Category Benefit and Bundling Opportunities

NEW OR EXISTING

- ☐ New Infrastructure or Facility
- ☒ Existing Infrastructure or Facility



PROJECT NUMBER 470634E
PROJECT CATEGORY Electric Utility
PROJECT LOCATION Citywide
COUNCIL WARD All Wards

PROJECT DESCRIPTION
This project involves the coordination and condemnation of existing Southern California Edison (SCE) facilities in areas previously annexed to the City limits. This project includes the acquisition of existing electric facilities, easements, and associated legal costs.

PROJECT STATUS
This is an ongoing project to purchase electric facilities and easement rights in annexed areas of the city formerly served by SCE.

OPERATING BUDGET IMPACT
This project purchases electric facilities and easement rights in annexed areas of the city formerly served by SCE and will not require additional operating and maintenance costs.

PROJECT FUNDING OVERVIEW

Total Project Cost	Prior Years Funding	Five-Year Plan	Remaining Needed
Ongoing	$ 2,111,980	$ 2,000,000	Ongoing

TWO-YEAR BUDGET AND FIVE-YEAR PLAN

Funding Source	FY 2026/27	FY 2027/28	FY 2028/29	FY 2029/30	FY 2030/31	Total
510 - Electric Fund	$ 400,000	$ 400,000	$ 400,000	$ 400,000	$ 400,000	$ 2,000,000
Total Funding	**$ 400,000**	**$ 400,000**	**$ 400,000**	**$ 400,000**	**$ 400,000**	**$ 2,000,000**

STREET LIGHTING

PRIORITIZATION CATEGORIES

- ☒ Risk to Health, Safety and Environment
- ☐ Regulatory or Mandated Requirements
- ☒ Asset Condition, Annual Recurring Costs, and Asset Longevity
- ☐ Community Investment and Economic Prosperity
- ☒ Level and Quality of Service
- ☐ Sustainability and Conservation
- ☐ Funding Availability
- ☐ Project Readiness
- ☒ Multiple Category Benefit and Bundling Opportunities

NEW OR EXISTING

- ☒ New Infrastructure or Facility
- ☒ Existing Infrastructure or Facility



PROJECT NUMBER 470607E
PROJECT CATEGORY Electric Utility
PROJECT LOCATION Citywide
COUNCIL WARD All Wards

PROJECT DESCRIPTION
This project includes the installation of equipment for minor system needs, excluding major streetlight projects. Project designs complement existing facilities and consider overall area lighting needs and current design standards.

PROJECT STATUS
This is the ongoing installation of minor streetlight needs, which contributes to fulfilling the City's obligation to meet lighting standards and contribute to safe environments within the City's service territory.

OPERATING BUDGET IMPACT
This project replaces existing and/or adds new infrastructure to the electric system and will not require additional operating and maintenance costs.

PROJECT FUNDING OVERVIEW

Total Project Cost	Prior Years Funding	Five-Year Plan	Remaining Needed
Ongoing	$ 8,444,867	$ 4,773,860	Ongoing

TWO-YEAR BUDGET AND FIVE-YEAR PLAN

Funding Source	FY 2026/27	FY 2027/28	FY 2028/29	FY 2029/30	FY 2030/31	Total
510 - Electric Fund	$ 794,772	$ 994,772	$ 994,772	$ 994,772	$ 994,772	$ 4,773,860
Total Funding	**$ 794,772**	**$ 994,772**	**$ 994,772**	**$ 994,772**	**$ 994,772**	**$ 4,773,860**

SUBSTATION BUS & UPGRADES

PRIORITIZATION CATEGORIES

- ☐ Risk to Health, Safety and Environment
- ☐ Regulatory or Mandated Requirements
- ☒ Asset Condition, Annual Recurring Costs, and Asset Longevity
- ☐ Community Investment and Economic Prosperity
- ☒ Level and Quality of Service
- ☐ Sustainability and Conservation
- ☐ Funding Availability
- ☐ Project Readiness
- ☒ Multiple Category Benefit and Bundling Opportunities

NEW OR EXISTING

- ☒ New Infrastructure or Facility
- ☒ Existing Infrastructure or Facility



PROJECT NUMBER 470616E
PROJECT CATEGORY Electric Utility
PROJECT LOCATION Citywide
COUNCIL WARD All Wards

PROJECT DESCRIPTION
The Substation Bus & Upgrades project replaces aging equipment and installs additional equipment necessary to improve the operability and safety of these neighborhood power centers (substations). This includes system protection, monitoring, automation systems for energized electrical components, perimeter walls, property improvements, the addition of new substations, and expansion of existing substations.

PROJECT STATUS
The ongoing replacement and addition of major substation equipment is prioritized based upon system load growth as well as age and obsolescence of existing equipment.

OPERATING BUDGET IMPACT
This project replaces existing and/or adds new infrastructure to the electric system and will not require additional operating and maintenance costs.

PROJECT FUNDING OVERVIEW

Total Project Cost	Prior Years Funding	Five-Year Plan	Remaining Needed
Ongoing	$ 77,361,036	$ 22,653,448	Ongoing

TWO-YEAR BUDGET AND FIVE-YEAR PLAN

Funding Source	FY 2026/27	FY 2027/28	FY 2028/29	FY 2029/30	FY 2030/31	Total
510 - Electric Fund	$ 4,505,011	$ 4,505,011	$ 4,505,011	$ 4,505,011	$ 4,633,404	$ 22,653,448
Total Funding	**$ 4,505,011**	**$ 4,505,011**	**$ 4,505,011**	**$ 4,505,011**	**$ 4,633,404**	**$ 22,653,448**

SUBSTATION INNOVATION

PRIORITIZATION CATEGORIES

- ☐ Risk to Health, Safety and Environment
- ☐ Regulatory or Mandated Requirements
- ☐ Asset Condition, Annual Recurring Costs, and Asset Longevity
- ☐ Community Investment and Economic Prosperity
- ☒ Level and Quality of Service
- ☐ Sustainability and Conservation
- ☐ Funding Availability
- ☒ Project Readiness
- ☒ Multiple Category Benefit and Bundling Opportunities

NEW OR EXISTING

- ☒ New Infrastructure or Facility
- ☐ Existing Infrastructure or Facility

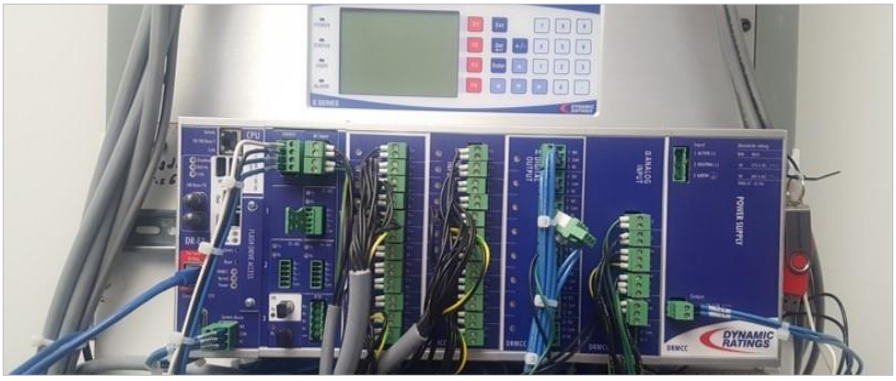

PROJECT NUMBER 470614E
PROJECT CATEGORY Electric Utility
PROJECT LOCATION Citywide
COUNCIL WARD All Wards

PROJECT DESCRIPTION
This project includes the purchase and installation of advanced substation protection and control devices, enhanced communication and monitoring systems, autonomous equipment operation, and secure remote access and control.

PROJECT STATUS
This is an ongoing project which contributes to fulfilling the City's obligation to serve electric load requirements within the City's service area.

OPERATING BUDGET IMPACT
This project replaces existing and/or adds new infrastructure to the electric system and will not require additional operating and maintenance costs.

PROJECT FUNDING OVERVIEW

Total Project Cost	Prior Years Funding	Five-Year Plan	Remaining Needed
Ongoing	$ 10,890	$ -	Ongoing

TWO-YEAR BUDGET AND FIVE-YEAR PLAN

Funding Source	FY 2026/27	FY 2027/28	FY 2028/29	FY 2029/30	FY 2030/31	Total
N/A	$ -	$ -	$ -	$ -	$ -	$ -
Total Funding	**$ -**	**$ -**	**$ -**	**$ -**	**$ -**	**$ -**

SUBSTATION TRANSFORMER ADDITION

PRIORITIZATION CATEGORIES

- ☐ Risk to Health, Safety and Environment
- ☐ Regulatory or Mandated Requirements
- ☒ Asset Condition, Annual Recurring Costs, and Asset Longevity
- ☐ Community Investment and Economic Prosperity
- ☒ Level and Quality of Service
- ☐ Sustainability and Conservation
- ☐ Funding Availability
- ☐ Project Readiness
- ☒ Multiple Category Benefit and Bundling Opportunities

NEW OR EXISTING

- ☒ New Infrastructure or Facility
- ☒ Existing Infrastructure or Facility



PROJECT NUMBER 470632E
PROJECT CATEGORY Electric Utility
PROJECT LOCATION Citywide
COUNCIL WARD All Wards

PROJECT DESCRIPTION
The Substation Transformer Additions include the need to install new substation power transformers and associated equipment to support upgrades necessitated by load growth and modernization. This project also includes proactive replacement of the oldest power transformers based on condition rating. The design of transformer additions complements existing facilities and improves overall system operation.

PROJECT STATUS
The ongoing replacement and addition of substation transformers is prioritized based upon system load growth as well as age and obsolescence of existing equipment.

OPERATING BUDGET IMPACT
This project replaces existing and/or adds new infrastructure to the electric system and will not require additional operating and maintenance costs.

PROJECT FUNDING OVERVIEW

Total Project Cost	Prior Years Funding	Five-Year Plan	Remaining Needed
Ongoing	$ 81,914,224	$ 48,881,632	Ongoing

TWO-YEAR BUDGET AND FIVE-YEAR PLAN

Funding Source	FY 2026/27	FY 2027/28	FY 2028/29	FY 2029/30	FY 2030/31	Total
510 - Electric Fund	$ 9,777,407	$ 10,730,969	$ 9,368,749	$ 9,368,748	$ 9,635,759	$ 48,881,632
Total Funding	**$ 9,777,407**	**$ 10,730,969**	**$ 9,368,749**	**$ 9,368,748**	**$ 9,635,759**	**$ 48,881,632**

SUPERVISORY CONTROL AND DATA ACQUISITION (SCADA)

PRIORITIZATION CATEGORIES

- ☒ Risk to Health, Safety and Environment
- ☐ Regulatory or Mandated Requirements
- ☐ Asset Condition, Annual Recurring Costs, and Asset Longevity
- ☐ Community Investment and Economic Prosperity
- ☒ Level and Quality of Service
- ☐ Sustainability and Conservation
- ☐ Funding Availability
- ☐ Project Readiness
- ☒ Multiple Category Benefit and Bundling Opportunities

NEW OR EXISTING

- ☒ New Infrastructure or Facility
- ☒ Existing Infrastructure or Facility

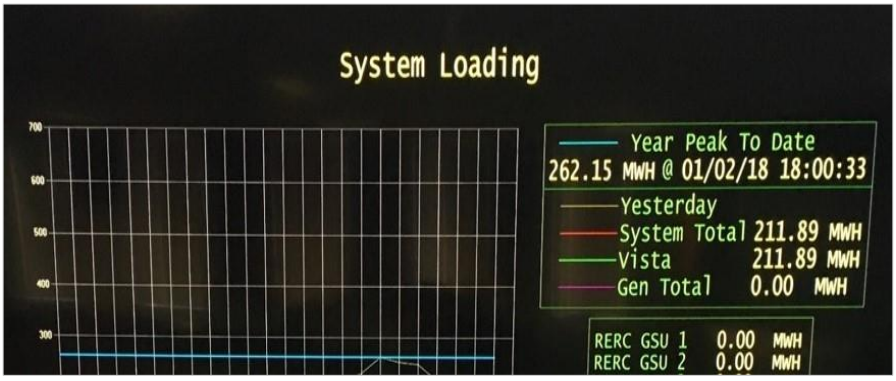

PROJECT NUMBER 470672E
PROJECT CATEGORY Electric Utility
PROJECT LOCATION Citywide
COUNCIL WARD All Wards

PROJECT DESCRIPTION
The Supervisory Control and Data Acquisition (SCADA) system provides for the necessary upgrades to the electronic system which monitors and controls the operation of the electric transmission and distribution grid 24 hours a day, 365 days a year. This includes physical security upgrades required for regulatory compliance as part of system improvements, as well as hardware and network upgrades as part of advanced technology improvements.

PROJECT STATUS
The ongoing installation and upgrade of SCADA monitoring and control equipment and technology is necessary to this critical system for the electric system and contributes to fulfilling the City's obligation to serve electric load requirements within the City's service territory.

OPERATING BUDGET IMPACT
This project replaces existing and/or adds new infrastructure to the electric system and will not require additional operating and maintenance costs.

PROJECT FUNDING OVERVIEW

Total Project Cost	Prior Years Funding	Five-Year Plan	Remaining Needed
Ongoing	$ 11,298,949	$ 3,000,000	Ongoing

TWO-YEAR BUDGET AND FIVE-YEAR PLAN

Funding Source	FY 2026/27	FY 2027/28	FY 2028/29	FY 2029/30	FY 2030/31	Total
510 - Electric Fund	$ 600,000	$ 600,000	$ 600,000	$ 600,000	$ 600,000	$ 3,000,000
Total Funding	**$ 600,000**	**$ 600,000**	**$ 600,000**	**$ 600,000**	**$ 600,000**	**$ 3,000,000**

SYSTEM SUBSTATION MODIFICATIONS

PRIORITIZATION CATEGORIES

- ☐ Risk to Health, Safety and Environment
- ☐ Regulatory or Mandated Requirements
- ☒ Asset Condition, Annual Recurring Costs, and Asset Longevity
- ☐ Community Investment and Economic Prosperity
- ☒ Level and Quality of Service
- ☐ Sustainability and Conservation
- ☐ Funding Availability
- ☐ Project Readiness
- ☒ Multiple Category Benefit and Bundling Opportunities

NEW OR EXISTING

- ☒ New Infrastructure or Facility
- ☒ Existing Infrastructure or Facility



PROJECT NUMBER 470608E
PROJECT CATEGORY Electric Utility
PROJECT LOCATION Citywide
COUNCIL WARD All Wards

PROJECT DESCRIPTION
The System Substation Modifications projects include modifications, replacements, and improvements of substation equipment and protection devices for minor system needs. This includes the design of substation components and complements existing facilities and improves overall system operation.

PROJECT STATUS
The ongoing replacement and minor modifications to substation equipment contributes to fulfilling the City's obligation to serve electric load requirements within the City's service territory.

OPERATING BUDGET IMPACT
This project replaces existing and/or adds new infrastructure to the electric system and will not require additional operating and maintenance costs.

PROJECT FUNDING OVERVIEW

Total Project Cost	Prior Years Funding	Five-Year Plan	Remaining Needed
Ongoing	$ 5,185,609	$ 3,274,884	Ongoing

TWO-YEAR BUDGET AND FIVE-YEAR PLAN

Funding Source	FY 2026/27	FY 2027/28	FY 2028/29	FY 2029/30	FY 2030/31	Total
510 - Electric Fund	$ 851,987	$ 601,439	$ 601,439	$ 601,439	$ 618,580	$ 3,274,884
Total Funding	**$ 851,987**	**$ 601,439**	**$ 601,439**	**$ 601,439**	**$ 618,580**	**$ 3,274,884**

TRANSFORMERS

PRIORITIZATION CATEGORIES

- ☐ Risk to Health, Safety and Environment
- ☐ Regulatory or Mandated Requirements
- ☒ Asset Condition, Annual Recurring Costs, and Asset Longevity
- ☐ Community Investment and Economic Prosperity
- ☒ Level and Quality of Service
- ☐ Sustainability and Conservation
- ☐ Funding Availability
- ☐ Project Readiness
- ☒ Multiple Category Benefit and Bundling Opportunities

NEW OR EXISTING

- ☒ New Infrastructure or Facility
- ☒ Existing Infrastructure or Facility



PROJECT NUMBER 470611E
PROJECT CATEGORY Electric Utility
PROJECT LOCATION Citywide
COUNCIL WARD All Wards

PROJECT DESCRIPTION
This Transformer Project enables the purchase of transformers for new residential, commercial, and industrial services as well as customer load additions. It also includes the purchase and installation of transformers to replace existing transformers found to be inoperable or damaged.

PROJECT STATUS
The ongoing purchase of distribution transformers is based on system need, reliability and outage response, which contributes to fulfilling the City's obligation to serve electric load requirements within the City's service territory. Analysis of overall area load requirements is considered prior to upgrading or replacing transformers.

OPERATING BUDGET IMPACT
This project replaces existing and/or adds new infrastructure to the electric system and will not require additional operating and maintenance costs.

PROJECT FUNDING OVERVIEW

Total Project Cost	Prior Years Funding	Five-Year Plan	Remaining Needed
Ongoing	$ 67,853,561	$ 29,635,793	Ongoing

TWO-YEAR BUDGET AND FIVE-YEAR PLAN

Funding Source	FY 2026/27	FY 2027/28	FY 2028/29	FY 2029/30	FY 2030/31	Total
510 - Electric Fund	$ 5,752,165	$ 5,970,907	$ 5,970,907	$ 5,970,907	$ 5,970,907	$ 29,635,793
Total Funding	**$ 5,752,165**	**$ 5,970,907**	**$ 5,970,907**	**$ 5,970,907**	**$ 5,970,907**	**$ 29,635,793**

WORK, ASSET, & INVENTORY MANAGEMENT SYSTEMS

PRIORITIZATION CATEGORIES

- ☐ Risk to Health, Safety and Environment
- ☐ Regulatory or Mandated Requirements
- ☐ Asset Condition, Annual Recurring Costs, and Asset Longevity
- ☒ Community Investment and Economic Prosperity
- ☒ Level and Quality of Service
- ☐ Sustainability and Conservation
- ☒ Funding Availability
- ☒ Project Readiness
- ☒ Multiple Category Benefit and Bundling Opportunities

NEW OR EXISTING

- ☒ New Infrastructure or Facility
- ☐ Existing Infrastructure or Facility



PROJECT NUMBER 470825E
PROJECT CATEGORY Electric Utility
PROJECT LOCATION Citywide
COUNCIL WARD All Wards

PROJECT DESCRIPTION
This is an ongoing project that encompasses an upgrade of the Work, Asset and Inventory Management System (WIS). The WIS is important not only for controlling and minimizing stock materials on-hand but for its hand-off of materials through the work management system and assigning the cost of materials to assets in the asset management system. The WIS is an integral part of the workflows and information needed by the Work Management System and Asset Management System. The system supports management of the Utility's field infrastructure assets (e.g., pipes, pumps, valves, connections, etc.) and includes field work orders, asset costs, and utilization.

PROJECT STATUS
Business requirements have been assembled, and the information is currently being utilized to draft an RFP.

OPERATING BUDGET IMPACT
This is an ongoing project. Additional ongoing annual software license and maintenance costs will be included in Innovation and Technology operating budgets which will be charged back to RPU starting in the fiscal year after project completion.

PROJECT FUNDING OVERVIEW

Total Project Cost	Prior Years Funding	Five-Year Plan	Remaining Needed
Ongoing	$ 4,891,709	$ 3,178,336	Ongoing

TWO-YEAR BUDGET AND FIVE-YEAR PLAN

Funding Source	FY 2026/27	FY 2027/28	FY 2028/29	FY 2029/30	FY 2030/31	Total
510 - Electric Fund	$ 562,236	$ 581,110	$ 656,563	$ 678,125	$ 700,302	$ 3,178,336
Total Funding	**$ 562,236**	**$ 581,110**	**$ 656,563**	**$ 678,125**	**$ 700,302**	**$ 3,178,336**



INNOVATION AND TECHNOLOGY

CITY OF RIVERSIDE

PROJECT LOCATION MAP

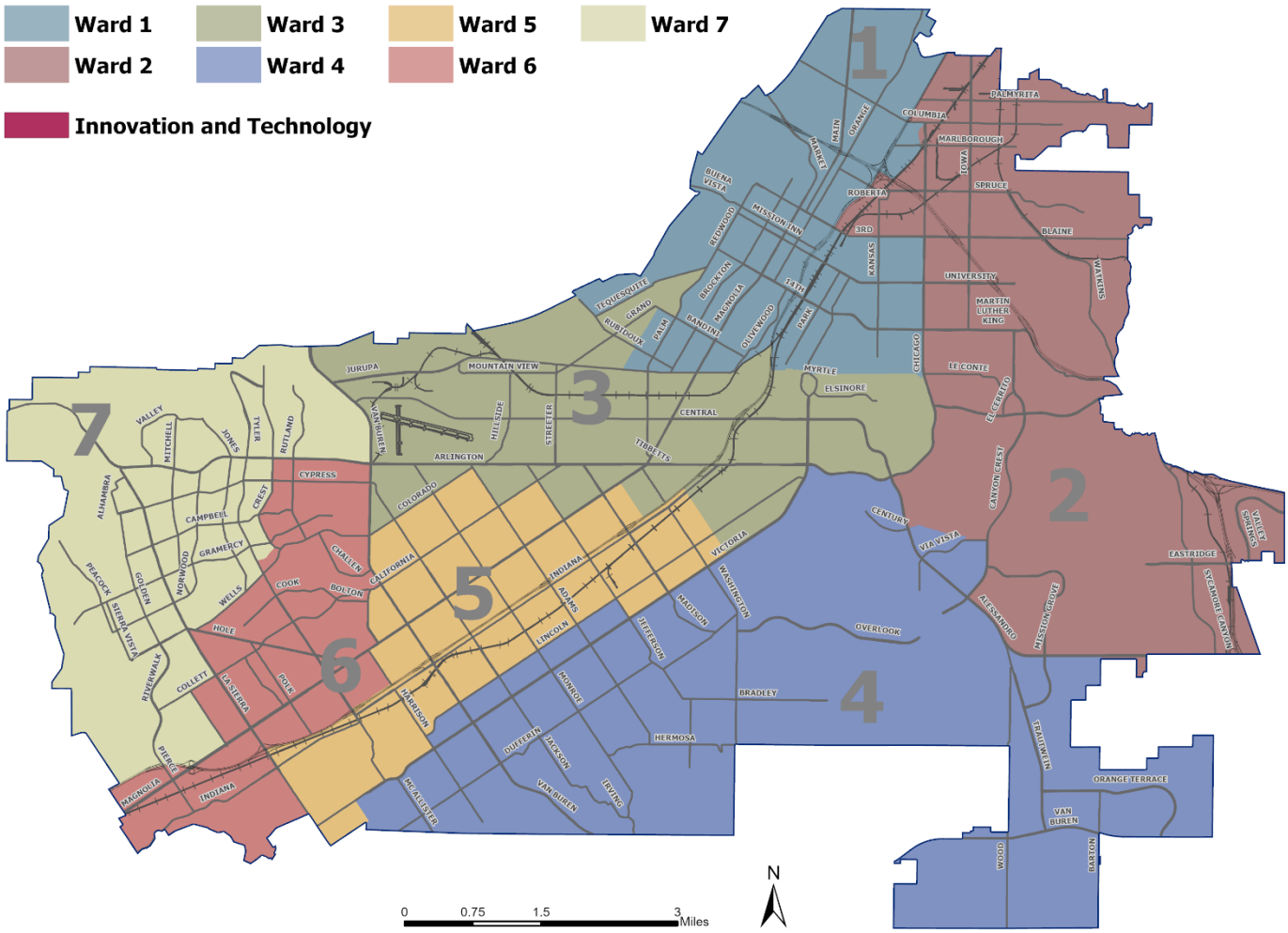

Note: This map includes all active and new capital projects. Ongoing and citywide projects are not included on the map. To view additional information and detailed maps, please visit the City's Budget Transparency Portal at https://Riverside.OpenBook.Questica.com.



This Page Intentionally Left Blank

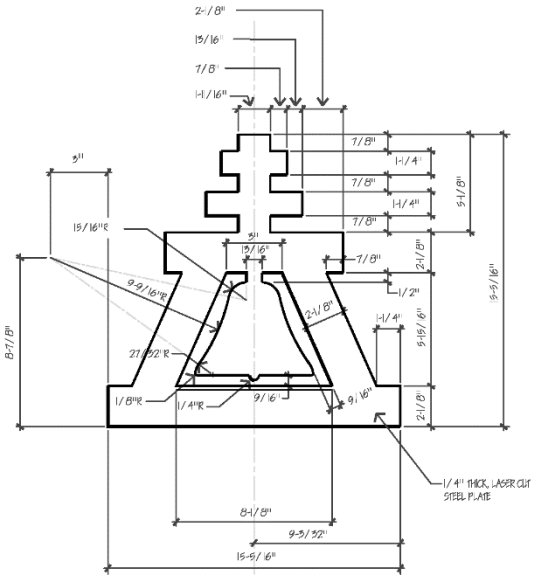

ENTERPRISE APPLICATION MODERNIZATION

PRIORITIZATION CATEGORIES

- ☐ Risk to Health, Safety and Environment
- ☐ Regulatory or Mandated Requirements
- ☒ Asset Condition, Annual Recurring Costs, and Asset Longevity
- ☐ Community Investment and Economic Prosperity
- ☒ Level and Quality of Service
- ☐ Sustainability and Conservation
- ☐ Funding Availability
- ☐ Project Readiness
- ☒ Multiple Category Benefit and Bundling Opportunities

NEW OR EXISTING

- ☐ New Infrastructure or Facility
- ☒ Existing Infrastructure or Facility



PROJECT NUMBER 9231 **COUNCIL WARD** All Wards
PROJECT CATEGORY Innovation & Technology
PROJECT LOCATION Citywide

PROJECT DESCRIPTION
This project seeks to upgrade, replace, and/or consolidate three of the City's major enterprise applications; the financial system, work order/asset management system, and customer information and billing system. They provide general ledger, job ledger, accounts payable, accounts receivable, budgeting, purchasing, human resources management, benefits management, timecard, payroll functions, asset management, service request and work order assignment, time and materials capture, inventory functions, customer account and billing functions citywide. These systems have approximately 1,800 users. The systems provide public online services, mobile, field, GIS capabilities, and possible consolidation to avoid duplicate data entry.

PROJECT STATUS
A request for proposals (RFP) was published in January 2024 seeking an outside consultant to analyze current systems for consolidation, conduct a gap assessment to reduce duplicate data entry, introduce public-facing self-service and mobile capabilities. A consultant has been selected to begin the system evaluation process. The estimated completion date for the project is Summer 2030.

OPERATING BUDGET IMPACT
Current software annual maintenance fees for existing systems would be utilized to offset new software annual maintenance fees. The total operating impact is unknown at this time but will be revisited as cost estimates are evaluated.

PROJECT FUNDING OVERVIEW

Total Project Cost	Prior Years Funding	Five-Year Plan	Remaining Needed
$ 25,000,000	$ 1,970,363	$ -	$ 23,029,637

TWO-YEAR BUDGET AND FIVE-YEAR PLAN

Funding Source	FY 2026/27	FY 2027/28	FY 2028/29	FY 2029/30	FY 2030/31	Total
N/A	$ -	$ -	$ -	$ -	$ -	$ -
Total Funding	**$ -**	**$ -**	**$ -**	**$ -**	**$ -**	**$ -**

This Page Intentionally Left Blank

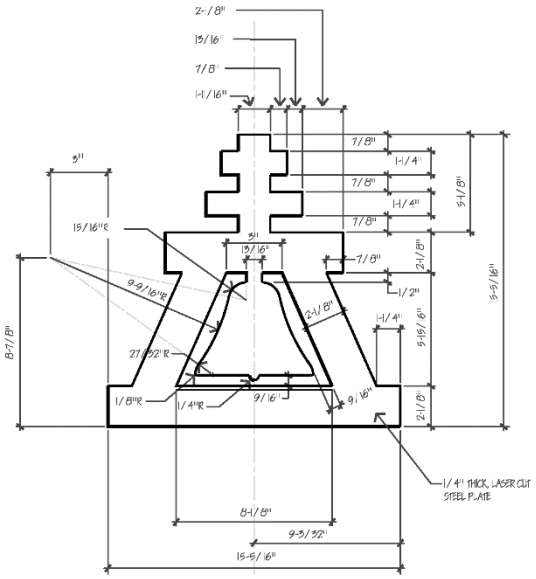



MUNICIPAL BUILDINGS AND FACILITIES

CITY OF RIVERSIDE

PROJECT LOCATION MAP

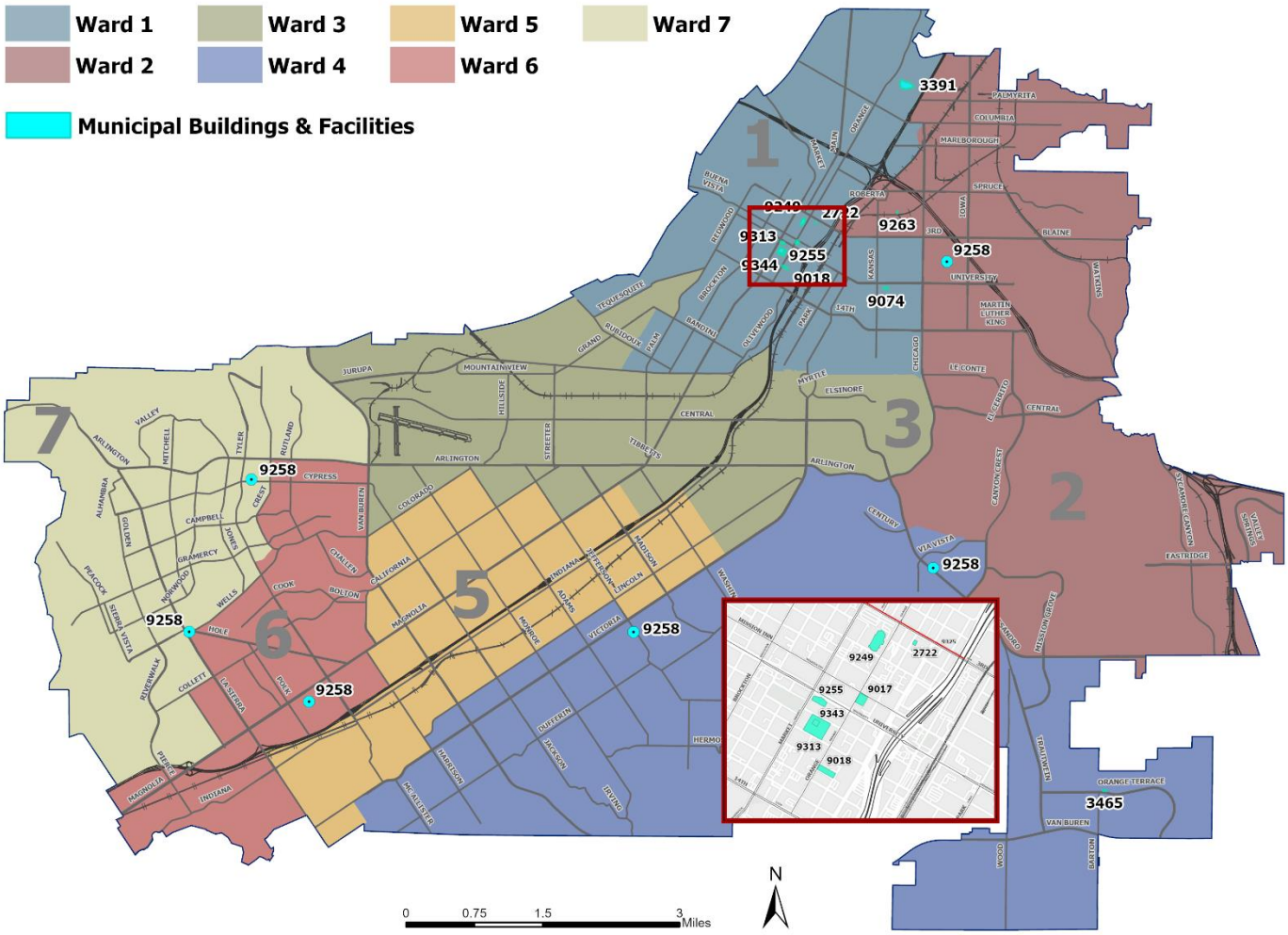

Note: This map includes all active and new capital projects. Ongoing and citywide projects are not included on the map. To view additional information and detailed maps, please visit the City's Budget Transparency Portal at https://Riverside.OpenBook.Questica.com.



This Page Intentionally Left Blank

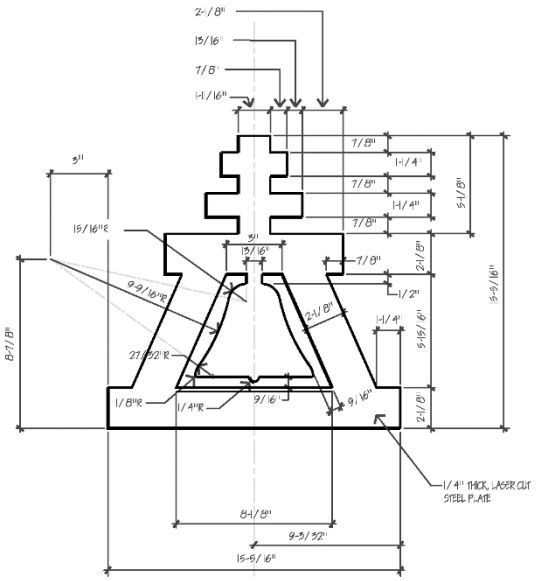

ANALOG SIMULCAST COMMUNICATION SYSTEM

PRIORITIZATION CATEGORIES

- ☒ Risk to Health, Safety and Environment
- ☐ Regulatory or Mandated Requirements
- ☒ Asset Condition, Annual Recurring Costs, and Asset Longevity
- ☐ Community Investment and Economic Prosperity
- ☐ Level and Quality of Service
- ☐ Sustainability and Conservation
- ☒ Funding Availability
- ☒ Project Readiness
- ☒ Multiple Category Benefit and Bundling Opportunities

NEW OR EXISTING

- ☐ New Infrastructure or Facility
- ☒ Existing Infrastructure or Facility



PROJECT NUMBER 9250 **COUNCIL WARD** All Wards
PROJECT CATEGORY Municipal Buildings & Facilities
PROJECT LOCATION Citywide

PROJECT DESCRIPTION
This project is to upgrade and install new analog radio equipment for emergency services in existing transmitting locations throughout the City. The current system is at the end of its useful life and requires replacement so that there will be no lapse in coverage for emergency services throughout the City.

PROJECT STATUS
The project is underway with an estimated completion date of July 2026.

OPERATING BUDGET IMPACT
This is a replacement of existing equipment and will not have any additional budgetary impact.

PROJECT FUNDING OVERVIEW

Total Project Cost	Prior Years Funding	Five-Year Plan	Remaining Needed
$ 1,566,441	$ 1,566,441	$ -	$ -

TWO-YEAR BUDGET AND FIVE-YEAR PLAN

Funding Source	FY 2026/27	FY 2027/28	FY 2028/29	FY 2029/30	FY 2030/31	Total
N/A	$ -	$ -	$ -	$ -	$ -	$ -
Total Funding	**$ -**	**$ -**	**$ -**	**$ -**	**$ -**	**$ -**

CITY ATTORNEY'S OFFICE RENOVATIONS

PRIORITIZATION CATEGORIES

- ☐ Risk to Health, Safety and Environment
- ☐ Regulatory or Mandated Requirements
- ☒ Asset Condition, Annual Recurring Costs, and Asset Longevity
- ☐ Community Investment and Economic Prosperity
- ☐ Level and Quality of Service
- ☐ Sustainability and Conservation
- ☒ Funding Availability
- ☐ Project Readiness
- ☒ Multiple Category Benefit and Bundling Opportunities

NEW OR EXISTING

- ☐ New Infrastructure or Facility
- ☒ Existing Infrastructure or Facility



PROJECT NUMBER 9255 **COUNCIL WARD** 1
PROJECT CATEGORY Municipal Buildings & Facilities
PROJECT LOCATION Mission Square Plaza, 3750 University Ave

PROJECT DESCRIPTION
This project is for the office-wide renovation and modernization of the City Attorney's Office. This project involves transforming the existing office library into a multi-purpose room, transforming the existing copy room into a trial preparation room, and transforming the existing conference room into an office space. In addition, the project addresses critical infrastructure needs, including making necessary repairs throughout the office to address safety hazards and modernizing the work environment to upgrade/modify existing workspaces to ensure safe, adequate, and appropriate facilities to meet the current operational needs of the office.

PROJECT STATUS
Construction is complete and the project is estimated to finish administrative close out phase by August 2026.

OPERATING BUDGET IMPACT
This project is for the replacement of existing fixtures, flooring, and furnishings and should not impact the operating budget as it is an update to the current facility.

PROJECT FUNDING OVERVIEW

Total Project Cost	Prior Years Funding	Five-Year Plan	Remaining Needed
$ 650,000	$ 650,000	$ -	$ -

TWO-YEAR BUDGET AND FIVE-YEAR PLAN

Funding Source	FY 2026/27	FY 2027/28	FY 2028/29	FY 2029/30	FY 2030/31	Total
N/A	$ -	$ -	$ -	$ -	$ -	$ -
Total Funding	**$ -**	**$ -**	**$ -**	**$ -**	**$ -**	**$ -**

CITY BUILDINGS DEFERRED MAINTENANCE

PRIORITIZATION CATEGORIES

- ☒ Risk to Health, Safety and Environment
- ☐ Regulatory or Mandated Requirements
- ☒ Asset Condition, Annual Recurring Costs, and Asset Longevity
- ☐ Community Investment and Economic Prosperity
- ☐ Level and Quality of Service
- ☐ Sustainability and Conservation
- ☒ Funding Availability
- ☒ Project Readiness
- ☒ Multiple Category Benefit and Bundling Opportunities

NEW OR EXISTING

- ☐ New Infrastructure or Facility
- ☒ Existing Infrastructure or Facility



PROJECT NUMBER 9019 **COUNCIL WARD** All Wards
PROJECT CATEGORY Municipal Buildings & Facilities
PROJECT LOCATION Citywide

PROJECT DESCRIPTION
This project maintains the City's existing core government facilities, such as libraries, fire and police stations, museum, and City Hall. Projects include minor capital work that is needed to maintain a safe and acceptable condition such as roof replacements and repairs, HVAC system replacements, parking lot overlays and rehabilitation, room remodels, floor replacements, etc.

PROJECT STATUS
This is an ongoing maintenance project. Work is prioritized annually based on facility condition assessments and safety needs. Current activities focus on roof and heating, ventilation, and air conditioning system replacements at various city facilities.

OPERATING BUDGET IMPACT
There is no operating impact as a result of rehabilitating existing infrastructure; the repairs will not require additional operational or maintenance costs.

PROJECT FUNDING OVERVIEW

Total Project Cost	Prior Years Funding	Five-Year Plan	Remaining Needed
Ongoing	$ 10,621,959	$ 6,500,000	Ongoing

TWO-YEAR BUDGET AND FIVE-YEAR PLAN

Funding Source	FY 2026/27	FY 2027/28	FY 2028/29	FY 2029/30	FY 2030/31	Total
420 - Measure Z Capital	$ 1,500,000	$ 1,500,000	$ 1,000,000	$ 1,000,000	$ 1,500,000	$ 6,500,000
Total Funding	**$ 1,500,000**	**$ 1,500,000**	**$ 1,000,000**	**$ 1,000,000**	**$ 1,500,000**	**$ 6,500,000**

CITY HALL BASEMENT FLOOD DAMAGES

PRIORITIZATION CATEGORIES

- ☒ Risk to Health, Safety and Environment
- ☐ Regulatory or Mandated Requirements
- ☐ Asset Condition, Annual Recurring Costs, and Asset Longevity
- ☐ Community Investment and Economic Prosperity
- ☐ Level and Quality of Service
- ☐ Sustainability and Conservation
- ☐ Funding Availability
- ☐ Project Readiness
- ☐ Multiple Category Benefit and Bundling Opportunities

NEW OR EXISTING

- ☐ New Infrastructure or Facility
- ☒ Existing Infrastructure or Facility

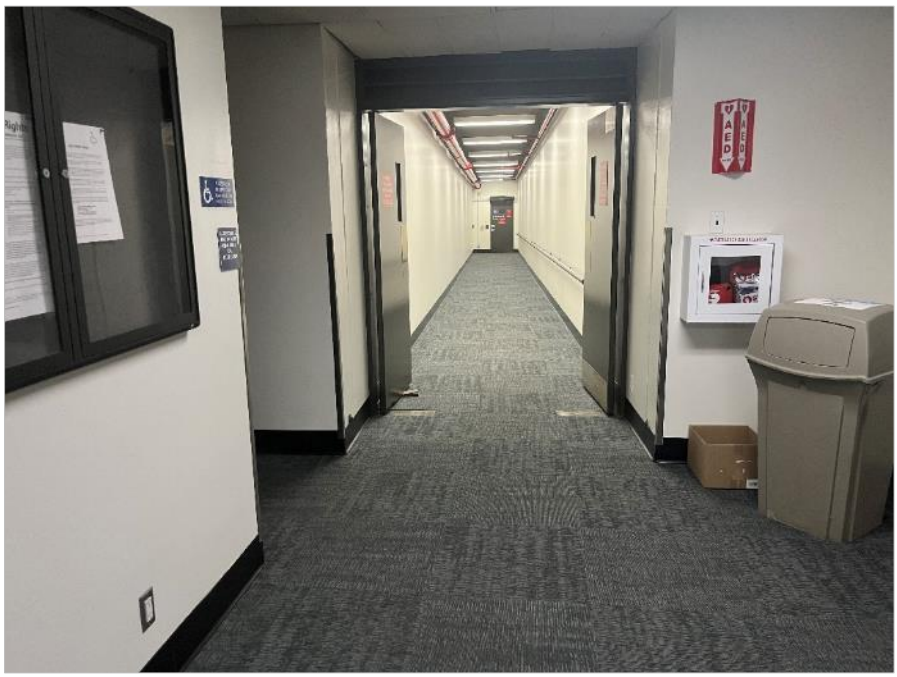

PROJECT NUMBER 9344 **COUNCIL WARD** 1
PROJECT CATEGORY Municipal Buildings & Facilities
PROJECT LOCATION 3900 Main St.

PROJECT DESCRIPTION
This project addresses damages in the City Hall Basement due to a recent flood. The repairs in the basement are being performed through a contract for emergency and non-emergency restoration services that was approved by City Council on June 27, 2023.

PROJECT STATUS
Physical work is 100% complete. The project is currently in the administrative closeout phase and the issuance of the final vendor payment to officially close the project is anticipated by August 2026.

OPERATING BUDGET IMPACT
There is no anticipated increase to the operating budget, as any ongoing maintenance costs will be absorbed within existing budget.

PROJECT FUNDING OVERVIEW

Total Project Cost	Prior Years Funding	Five-Year Plan	Remaining Needed
$ 500,000	$ 500,000	$ -	-

TWO-YEAR BUDGET AND FIVE-YEAR PLAN

Funding Source	FY 2026/27	FY 2027/28	FY 2028/29	FY 2029/30	FY 2030/31	Total
N/A	$ -	$ -	$ -	$ -	$ -	$ -
Total Funding	**$ -**	**$ -**	**$ -**	**$ -**	**$ -**	**$ -**

CITY HALL ELEVATOR MODERNIZATION

PRIORITIZATION CATEGORIES

- ☒ Risk to Health, Safety and Environment
- ☒ Regulatory or Mandated Requirements
- ☒ Asset Condition, Annual Recurring Costs, and Asset Longevity
- ☐ Community Investment and Economic Prosperity
- ☒ Level and Quality of Service
- ☐ Sustainability and Conservation
- ☒ Funding Availability
- ☒ Project Readiness
- ☒ Multiple Category Benefit and Bundling Opportunities

NEW OR EXISTING

- ☐ New Infrastructure or Facility
- ☒ Existing Infrastructure or Facility



PROJECT NUMBER 9313 **COUNCIL WARD** 1
PROJECT CATEGORY Municipal Buildings & Facilities
PROJECT LOCATION 3900 Main Street

PROJECT DESCRIPTION
This project provides for the complete modernization of the three, 50-year-old geared traction elevators at Riverside City Hall. The scope includes replacing the elevator control systems, hoist machines, door operation, and all associated car and hall fixtures. This essential upgrade is required due to the increasing age and failure rate of the current equipment. The project will significantly improve the safety, reliability, performance, and long-term ADA compliance of the elevators, ensuring efficient and secure access for the public and City staff.

PROJECT STATUS
The project is in the design phase, with modernization requirements under development. Construction is anticipated to begin in January 2027 with an estimated completion date in Winter 2027.

OPERATING BUDGET IMPACT
This project is a rehabilitation of existing core infrastructure. The modernization is expected to increase energy efficiency and reduce the frequency and cost of maintenance repairs. There is no anticipated increase to the operating budget, as any ongoing maintenance costs will be absorbed within existing funding.

PROJECT FUNDING OVERVIEW

Total Project Cost	Prior Years Funding	Five-Year Plan	Remaining Needed
$ 1,583,364	$ 1,583,364	$ -	$ -

TWO-YEAR BUDGET AND FIVE-YEAR PLAN

Funding Source	FY 2026/27	FY 2027/28	FY 2028/29	FY 2029/30	FY 2030/31	Total
N/A	$ -	$ -	$ -	$ -	$ -	$ -
Total Funding	**$ -**	**$ -**	**$ -**	**$ -**	**$ -**	**$ -**

CITY HALL LOBBY RENOVATION

PRIORITIZATION CATEGORIES

- ☐ Risk to Health, Safety and Environment
- ☐ Regulatory or Mandated Requirements
- ☐ Asset Condition, Annual Recurring Costs, and Asset Longevity
- ☐ Community Investment and Economic Prosperity
- ☒ Level and Quality of Service
- ☐ Sustainability and Conservation
- ☐ Funding Availability
- ☐ Project Readiness
- ☐ Multiple Category Benefit and Bundling Opportunities

NEW OR EXISTING

- ☐ New Infrastructure or Facility
- ☒ Existing Infrastructure or Facility



PROJECT NUMBER 9343 **COUNCIL WARD** 1
PROJECT CATEGORY Municipal Buildings & Facilities
PROJECT LOCATION 3900 Main Street

PROJECT DESCRIPTION
This project provides for a comprehensive renovation of the City Hall lobby. The project will renovate the lobby to provide new office space for the City Clerk's Office to relocate to the main floor, add a grab-and-go style food service area, and relocate the concierge desk to a more central location adjacent to the elevators. Relocating the City Clerk's Office will enable easier public access for election and passport services. Relocating the concierge desk will help improve the efficiency of foot traffic in the lobby and enable City staff and City Hall security to more effectively assist visitors. The project will also provide new furnishings and lighting improvements throughout the lobby area. Renovation of the lobby will provide a more active use of the space and refresh the lobby area.

PROJECT STATUS
A Request for Proposal (RFP) was closed on January 21, 2026. Construction is anticipated to begin in Fall 2026 with estimated completion date of Fall 2027.

OPERATING BUDGET IMPACT
Operating impacts are currently unknown. As the project gets nearer to completion the City will evaluate the impacts.

PROJECT FUNDING OVERVIEW			
Total Project Cost	Prior Years Funding	Five-Year Plan	Remaining Needed
$ 2,280,177	$ 2,280,177	$ -	$ -

TWO-YEAR BUDGET AND FIVE-YEAR PLAN						
Funding Source	FY 2026/27	FY 2027/28	FY 2028/29	FY 2029/30	FY 2030/31	Total
N/A	$ -	$ -	$ -	$ -	$ -	$ -
Total Funding	**$ -**	**$ -**	**$ -**	**$ -**	**$ -**	**$ -**

CONVENTION CENTER CHILLER

PRIORITIZATION CATEGORIES

- ☒ Risk to Health, Safety and Environment
- ☐ Regulatory or Mandated Requirements
- ☒ Asset Condition, Annual Recurring Costs, and Asset Longevity
- ☐ Community Investment and Economic Prosperity
- ☐ Level and Quality of Service
- ☒ Sustainability and Conservation
- ☒ Funding Availability
- ☒ Project Readiness
- ☒ Multiple Category Benefit and Bundling Opportunities

NEW OR EXISTING

- ☐ New Infrastructure or Facility
- ☒ Existing Infrastructure or Facility



PROJECT NUMBER 9249 **COUNCIL WARD** 1
PROJECT CATEGORY Municipal Buildings & Facilities
PROJECT LOCATION 3637 5th Street

PROJECT DESCRIPTION
This project is for the replacement of one Daikin Water-Cooled Chiller for the Riverside Convention Center. Installation will be performed in-house by General Services staff. There are two chillers at the Convention Center, however, one chiller has been inoperable since 2017 and unable to be repaired, resulting in excessive wear and tear on the second chiller, with no backup chiller in the event of equipment failure. As the Convention Center cannot be without proper ventilation or the ability to cool all spaces within the facility to maintain a safe and comfortable environment for revenue generating meetings and events, the Convention Center has been renting a temporary back-up chiller, pending replacement of the inoperable chiller.

PROJECT STATUS
Construction is in progress with project completion estimated by August 2026.

OPERATING BUDGET IMPACT
As this is a replacement for existing equipment, there is no expected additional operating impact from the completion of this project. Upon completion, this project will eliminate the rental cost of a temporary back-up chiller.

PROJECT FUNDING OVERVIEW

Total Project Cost	Prior Years Funding	Five-Year Plan	Remaining Needed
$ 600,000	$ 600,000	$ -	$ -

TWO-YEAR BUDGET AND FIVE-YEAR PLAN

Funding Source	FY 2026/27	FY 2027/28	FY 2028/29	FY 2029/30	FY 2030/31	Total
N/A	$ -	$ -	$ -	$ -	$ -	$ -
Total Funding	**$ -**	**$ -**	**$ -**	**$ -**	**$ -**	**$ -**

EASTSIDE LIBRARY

PRIORITIZATION CATEGORIES

- ☐ Risk to Health, Safety and Environment
- ☐ Regulatory or Mandated Requirements
- ☐ Asset Condition, Annual Recurring Costs, and Asset Longevity
- ☒ Community Investment and Economic Prosperity
- ☐ Level and Quality of Service
- ☐ Sustainability and Conservation
- ☐ Funding Availability
- ☐ Project Readiness
- ☐ Multiple Category Benefit and Bundling Opportunities

NEW OR EXISTING

- ☒ New Infrastructure or Facility
- ☐ Existing Infrastructure or Facility

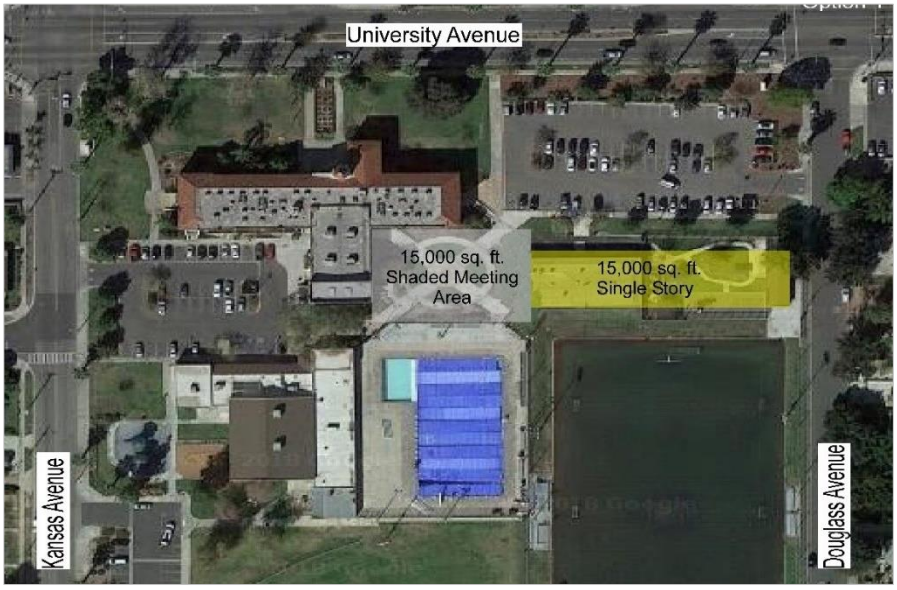

PROJECT NUMBER 9074 **COUNCIL WARD** 1
PROJECT CATEGORY Municipal Buildings & Facilities
PROJECT LOCATION 2060 University Avenue

PROJECT DESCRIPTION
The Jesus S. Duran Eastside Library, the third busiest library in the City, delivers service to the community in a 10,816 square-foot leased facility. The proposed Eastside Library facility is a single-story building of approximately 15,000 square feet with an outdoor 15,000 square foot shaded meeting area, located at Bobby Bonds Park.

PROJECT STATUS
The project has progressed into the construction phase, marked by contractor mobilization, site preparation, and the start of vertical construction in accordance with approved plans and specifications. Project is estimated to be complete in Winter 2028.

OPERATING BUDGET IMPACT
This is a replacement for an existing facility and all existing budgets for personnel and maintenance will be utilized in the new facility. There is no anticipation of any additional operating impact.

PROJECT FUNDING OVERVIEW

Total Project Cost	Prior Years Funding	Five-Year Plan	Remaining Needed
$ 21,579,105	$ 21,579,105	$ -	$ -

TWO-YEAR BUDGET AND FIVE-YEAR PLAN

Funding Source	FY 2026/27	FY 2027/28	FY 2028/29	FY 2029/30	FY 2030/31	Total
N/A	$ -	$ -	$ -	$ -	$ -	$ -
Total Funding	**$ -**	**$ -**	**$ -**	**$ -**	**$ -**	**$ -**

GENERATOR REPLACEMENT/REPAIRS

PRIORITIZATION CATEGORIES

- ☒ Risk to Health, Safety and Environment
- ☐ Regulatory or Mandated Requirements
- ☒ Asset Condition, Annual Recurring Costs, and Asset Longevity
- ☐ Community Investment and Economic Prosperity
- ☐ Level and Quality of Service
- ☐ Sustainability and Conservation
- ☒ Funding Availability
- ☒ Project Readiness
- ☒ Multiple Category Benefit and Bundling Opportunities

NEW OR EXISTING

- ☐ New Infrastructure or Facility
- ☒ Existing Infrastructure or Facility



PROJECT NUMBER 9258 **COUNCIL WARD** 2,4,6,7
PROJECT CATEGORY Municipal Buildings & Facilities
PROJECT LOCATION Various

PROJECT DESCRIPTION
This project is for the replacement of outdated generators, transfer switches, ancillary equipment, and electrical components. This project will remove and replace any structural components and finishes and install factory weatherproof housings to protect the new equipment. The replacements will take place at Fire Stations 4, 7, 8, 9, and 10. The generator at the Magnolia Police Station will be refurbished to bring it up to proper working order.

PROJECT STATUS
The design phase is completed with installation scheduled in Summer 2026.

OPERATING BUDGET IMPACT
This is a replacement of existing equipment and will not require any additional maintenance or operating costs.

PROJECT FUNDING OVERVIEW

Total Project Cost	Prior Years Funding	Five-Year Plan	Remaining Needed
$ 1,750,000	$ 1,750,000	$ -	$ -

TWO-YEAR BUDGET AND FIVE-YEAR PLAN

Funding Source	FY 2026/27	FY 2027/28	FY 2028/29	FY 2029/30	FY 2030/31	Total
N/A	$ -	$ -	$ -	$ -	$ -	$ -
Total Funding	**$ -**	**$ -**	**$ -**	**$ -**	**$ -**	**$ -**

HARADA HOUSE AND INTERPRETIVE CENTER

PRIORITIZATION CATEGORIES

- ☐ Risk to Health, Safety and Environment
- ☐ Regulatory or Mandated Requirements
- ☒ Asset Condition, Annual Recurring Costs, and Asset Longevity
- ☐ Community Investment and Economic Prosperity
- ☒ Level and Quality of Service
- ☒ Sustainability and Conservation
- ☒ Funding Availability
- ☐ Project Readiness
- ☒ Multiple Category Benefit and Bundling Opportunities

NEW OR EXISTING

- ☒ New Infrastructure or Facility
- ☒ Existing Infrastructure or Facility



PROJECT NUMBER 2722 **COUNCIL WARD** 1
PROJECT CATEGORY Municipal Buildings & Facilities
PROJECT LOCATION 3356 & 3342 Lemon Street

PROJECT DESCRIPTION
This project is for the rehabilitation of two historic structures, The Harada House and the adjacent Robinson House. Built circa 1884, the National Historic Landmark Harada House is a powerful civil rights landmark in California. Harada House needs significant work to stabilize and preserve the structure so it can be opened to the public for guided tours. Harada House Interpretive Center - The structure formerly known as Robinson House is adjacent to Harada House and will serve as an interpretive center for the National Landmark Harada House, offering exhibitions and public programs. The existing house and garage are structurally unsound and will be demolished and reconstructed on this site.

PROJECT STATUS
The project is currently in the design phase. Construction completion is estimated to be in Summer 2028.

OPERATING BUDGET IMPACT
Upon project completion, the Museum Department budget will need to factor in ongoing operating costs including utilities, landscaping maintenance, and security. In addition, there will be programming costs. Museum staff researched utility costs for operating historic sites and developed an estimated cost per square foot for utilities and maintenance. The estimated cost of maintenance and utilities is $6,052 for Harada House and $4,147 for the Interpretive Center. Because this project will not be completed for at least two years, updated estimates will need to factor in variations in inflation.

PROJECT FUNDING OVERVIEW

Total Project Cost	Prior Years Funding	Five-Year Plan	Remaining Needed
$ 7,890,028	$ 7,550,000	$ -	$ 340,028

TWO-YEAR BUDGET AND FIVE-YEAR PLAN

Funding Source	FY 2026/27	FY 2027/28	FY 2028/29	FY 2029/30	FY 2030/31	Total
N/A	$ -	$ -	$ -	$ -	$ -	$ -
Total Funding	**$ -**	**$ -**	**$ -**	**$ -**	**$ -**	**$ -**

MUSEUM EXPANSION & REHABILITATION

PRIORITIZATION CATEGORIES

- ☐ Risk to Health, Safety and Environment
- ☐ Regulatory or Mandated Requirements
- ☒ Asset Condition, Annual Recurring Costs, and Asset Longevity
- ☒ Community Investment and Economic Prosperity
- ☒ Level and Quality of Service
- ☒ Sustainability and Conservation
- ☒ Funding Availability
- ☐ Project Readiness
- ☒ Multiple Category Benefit and Bundling Opportunities

NEW OR EXISTING

- ☐ New Infrastructure or Facility
- ☒ Existing Infrastructure or Facility



PROJECT NUMBER 9017 **COUNCIL WARD** 1
PROJECT CATEGORY Municipal Buildings & Facilities
PROJECT LOCATION 3580 Mission Inn Avenue

PROJECT DESCRIPTION
This project provides for the comprehensive rehabilitation and expansion of the historic Museum of Riverside to approximately 32,000 sq ft. A two-story addition on the back of the building will replace multiple later additions. The project will also include new galleries with high standards of environmental and security controls as well as flexible-use galleries in the historic structure. The new renovation will bring the Museum into the twenty-first century and provide visitors with a modern museum experience where they will learn about the cultural and natural history of Riverside and the region.

PROJECT STATUS
The project has progressed into the construction phase, marked by contractor mobilization, site preparation, and the start of vertical construction in accordance with approved plans and specifications. The project is expected to be completed by Winter 2026.

OPERATING BUDGET IMPACT
The estimated annual maintenance and utility cost is $79,530, adjusted for future CPI. Costs will be updated as needed and included in the budget after project completion.

PROJECT FUNDING OVERVIEW

Total Project Cost	Prior Years Funding	Five-Year Plan	Remaining Needed
$ 42,000,000	$ 42,000,000	$ -	$ -

TWO-YEAR BUDGET AND FIVE-YEAR PLAN

Funding Source	FY 2026/27	FY 2027/28	FY 2028/29	FY 2029/30	FY 2030/31	Total
N/A	$ -	$ -	$ -	$ -	$ -	$ -
Total Funding	**$ -**	**$ -**	**$ -**	**$ -**	**$ -**	**$ -**

NORTHSIDE AGRICULTURAL INNOVATION CENTER PHASE I

PRIORITIZATION CATEGORIES

- ☐ Risk to Health, Safety and Environment
- ☐ Regulatory or Mandated Requirements
- ☐ Asset Condition, Annual Recurring Costs, and Asset Longevity
- ☒ Community Investment and Economic Prosperity
- ☒ Level and Quality of Service
- ☐ Sustainability and Conservation
- ☒ Funding Availability
- ☒ Project Readiness
- ☒ Multiple Category Benefit and Bundling Opportunities

NEW OR EXISTING

- ☒ New Infrastructure or Facility
- ☐ Existing Infrastructure or Facility



PROJECT NUMBER 3391 **COUNCIL WARD** 1
PROJECT CATEGORY Municipal Buildings & Facilities
PROJECT LOCATION 895 & 900 Clark Street

PROJECT DESCRIPTION
This project will develop Phase I of the Northside Agricultural Innovation Center (NAIC), an 8.8-acre initiative providing land resources and facilities to support regional workforce development, innovation, entrepreneurship, and tech-enabled business creation in modern, sustainable agriculture and food production. Located at 895 and 900 Clark Street in Riverside, the project will offer agriculture-themed experiential workshops, training programs, and business incubation opportunities. Planned amenities include a trail system, community garden, farmer training facilities, and a co-work learning center.

PROJECT STATUS
The project is currently in Phase 1 with site acquisition completed. Phase 1 includes walking trails, tree plantings, a community garden, workshop and training facilities, and water and electric utility infrastructure. With groundbreaking held March 5, 2025, Phase 1 is estimated to complete in late 2026.

OPERATING BUDGET IMPACT
Once the facility is open to the public, there will be ongoing costs including staffing, building maintenance, and other day-to-day operational costs. These costs are currently unfunded.

PROJECT FUNDING OVERVIEW

Total Project Cost	Prior Years Funding	Five-Year Plan	Remaining Needed
$ 13,079,141	$ 6,278,524	$ -	$ 6,800,617

TWO-YEAR BUDGET AND FIVE-YEAR PLAN

Funding Source	FY 2026/27	FY 2027/28	FY 2028/29	FY 2029/30	FY 2030/31	Total
N/A	$ -	$ -	$ -	$ -	$ -	$ -
Total Funding	**$ -**	**$ -**	**$ -**	**$ -**	**$ -**	**$ -**

ORANGE TERRACE LIBRARY HVAC

PRIORITIZATION CATEGORIES

- ☒ Risk to Health, Safety and Environment
- ☐ Regulatory or Mandated Requirements
- ☐ Asset Condition, Annual Recurring Costs, and Asset Longevity
- ☐ Community Investment and Economic Prosperity
- ☐ Level and Quality of Service
- ☒ Sustainability and Conservation
- ☒ Funding Availability
- ☐ Project Readiness
- ☒ Multiple Category Benefit and Bundling Opportunities

NEW OR EXISTING

- ☐ New Infrastructure or Facility
- ☒ Existing Infrastructure or Facility



PROJECT NUMBER 3465 **COUNCIL WARD** 4
PROJECT CATEGORY Municipal Buildings & Facilities
PROJECT LOCATION 20010 Orange Terrace Parkway

PROJECT DESCRIPTION
This project is for repairing and replacing portions of the library's heating, ventilation, and air conditioning (HVAC) systems. The project will evaluate the operational condition of the entire HVAC system and determine what is needed for replacement and/or repair. Potential areas that will require replacement or repairs are compressors, condenser units, electrical wiring and switches, and other environmental needs in order to bring the system into regulatory compliance with all pollution regulations.

PROJECT STATUS
The project is estimated to be completed by the end of Fall 2026.

OPERATING BUDGET IMPACT
As this is a replacement for existing infrastructure, there is no additional operating impact.

PROJECT FUNDING OVERVIEW

Total Project Cost	Prior Years Funding	Five-Year Plan	Remaining Needed
$ 27,500	$ 27,500	$ -	$ -

TWO-YEAR BUDGET AND FIVE-YEAR PLAN

Funding Source	FY 2026/27	FY 2027/28	FY 2028/29	FY 2029/30	FY 2030/31	Total
N/A	$ -	$ -	$ -	$ -	$ -	$ -
Total Funding	**$ -**	**$ -**	**$ -**	**$ -**	**$ -**	**$ -**

POLICE HEADQUARTERS

PRIORITIZATION CATEGORIES

- ☒ Risk to Health, Safety and Environment
- ☐ Regulatory or Mandated Requirements
- ☐ Asset Condition, Annual Recurring Costs, and Asset Longevity
- ☐ Community Investment and Economic Prosperity
- ☒ Level and Quality of Service
- ☐ Sustainability and Conservation
- ☐ Funding Availability
- ☐ Project Readiness
- ☒ Multiple Category Benefit and Bundling Opportunities

NEW OR EXISTING

- ☒ New Infrastructure or Facility
- ☐ Existing Infrastructure or Facility



PROJECT NUMBER 9018 **COUNCIL WARD** 1
PROJECT CATEGORY Municipal Buildings & Facilities
PROJECT LOCATION 4102 Orange Street

PROJECT DESCRIPTION
The Police Headquarters project will be a state-of-the-art facility designed to meet the administrative needs of the Riverside Police Department. The design will be adaptive to meet future needs and may include a community center, Emergency Operations Center expansion, joint police and fire training facility, physical agility training center, and secured parking for special operational equipment. The new building will have an estimated service life of 50-60 years.

PROJECT STATUS
Project is in the Design Development phase for the Downtown Police Administration Building, advancing the project into detailed multidisciplinary coordination, including architectural, structural, and MEP systems refinement. A bid is expected to be completed in Fall 2026 with an estimated completion date of December 2028. A bid is expected to be completed in Fall 2026 with an estimated completion date of December 2028.

OPERATING BUDGET IMPACT
The operating impacts of a new facility will be estimated after a design is selected.

PROJECT FUNDING OVERVIEW

Total Project Cost	Prior Years Funding	Five-Year Plan	Remaining Needed
$ 62,000,000	$ 62,000,00	$ -	$ -

TWO-YEAR BUDGET AND FIVE-YEAR PLAN

Funding Source	FY 2026/27	FY 2027/28	FY 2028/29	FY 2029/30	FY 2030/31	Total
N/A	$ -	$ -	$ -	$ -	$ -	$ -
Total Funding	**$ -**	**$ -**	**$ -**	**$ -**	**$ -**	**$ -**

RIVERSIDE ACCESS CENTER REHABILITATION

PRIORITIZATION CATEGORIES

- ☐ Risk to Health, Safety and Environment
- ☐ Regulatory or Mandated Requirements
- ☒ Asset Condition, Annual Recurring Costs, and Asset Longevity
- ☐ Community Investment and Economic Prosperity
- ☒ Level and Quality of Service
- ☐ Sustainability and Conservation
- ☐ Funding Availability
- ☒ Project Readiness
- ☒ Multiple Category Benefit and Bundling Opportunities

NEW OR EXISTING

- ☐ New Infrastructure or Facility
- ☒ Existing Infrastructure or Facility



PROJECT NUMBER 9263 **COUNCIL WARD** 2
PROJECT CATEGORY Municipal Buildings & Facilities
PROJECT LOCATION 2800 Hulen Place

PROJECT DESCRIPTION
The Access Center is a Design/Build renovation of the interior of the facility and provides improved security for clients upon entering the facility and a secured access point between the clients and Access Center staff. It would provide private interview rooms for clients and a conference room for staff. Renovated restrooms, drop ceiling in the staff area for privacy, new breakroom for staff, upgraded HVAC systems, new flooring, roof repairs, and additional storage. Additional improvements will be evaluated based on budget and additional needs identified.

PROJECT STATUS
Construction is in progress with an anticipated completion of Winter 2026.

OPERATING BUDGET IMPACT
This is the rehabilitation of an existing facility, so no additional budget impacts are anticipated.

PROJECT FUNDING OVERVIEW

Total Project Cost	Prior Years Funding	Five-Year Plan	Remaining Needed
$ 1,639,850	$ 1,639,850	$ -	$ -

TWO-YEAR BUDGET AND FIVE-YEAR PLAN

Funding Source	FY 2026/27	FY 2027/28	FY 2028/29	FY 2029/30	FY 2030/31	Total
N/A	$ -	$ -	$ -	$ -	$ -	$ -
Total Funding	**$ -**	**$ -**	**$ -**	**$ -**	**$ -**	**$ -**

This Page Intentionally Left Blank

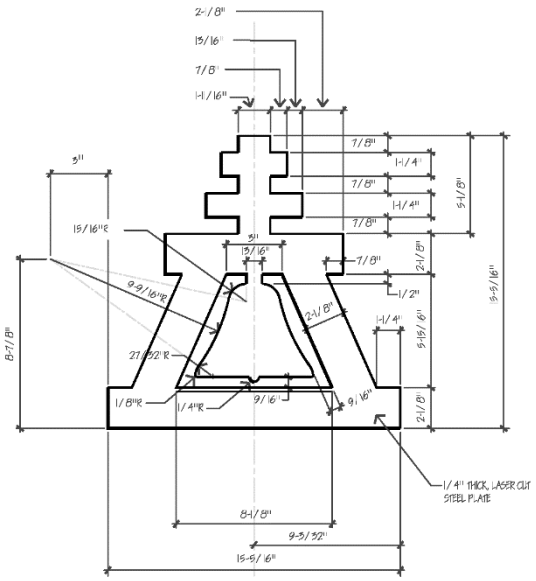



PARKS, RECREATION & COMMUNITY SERVICES

CITY OF RIVERSIDE

PROJECT LOCATION MAP

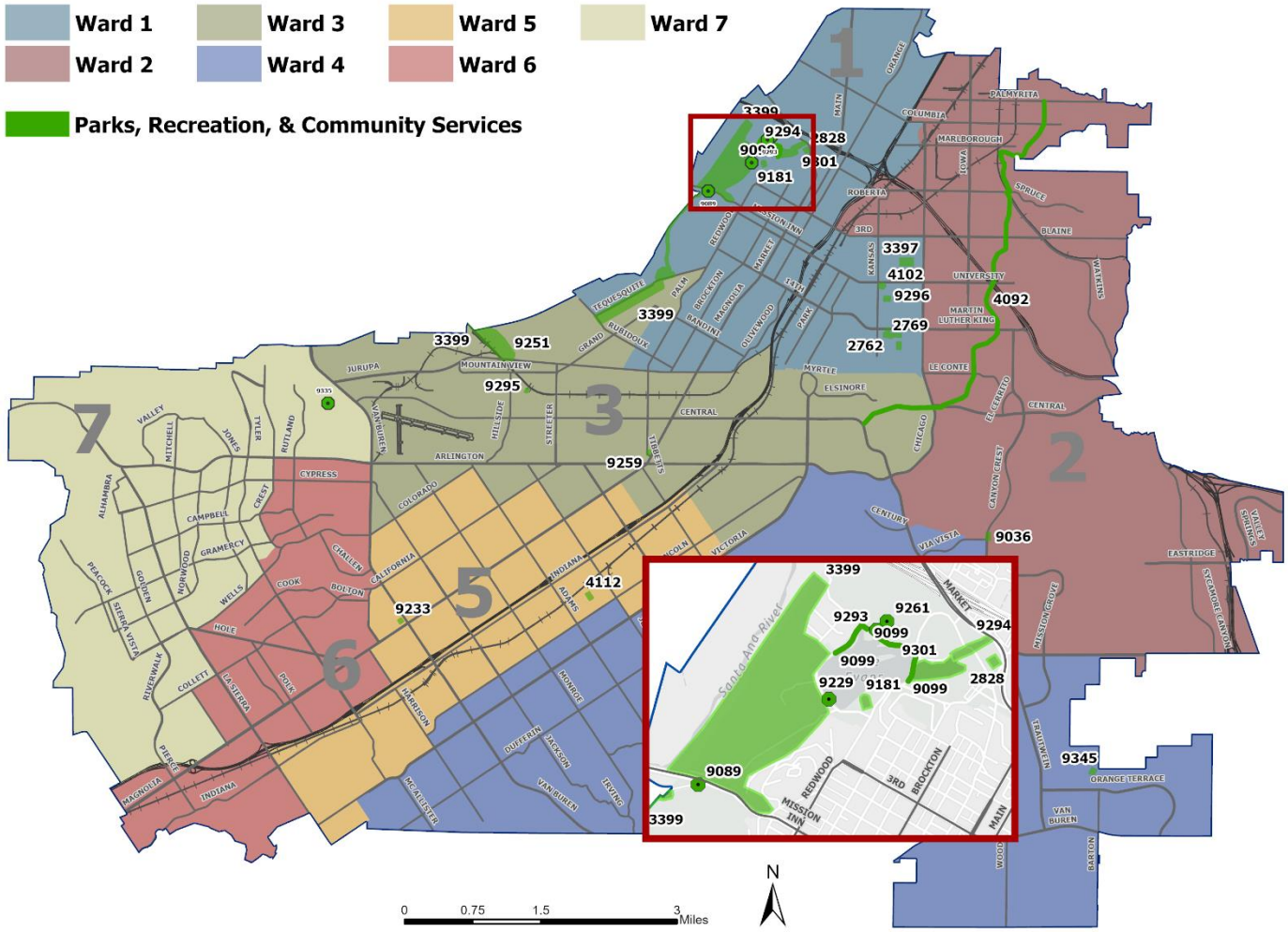

Note: This map includes all active and new capital projects. Ongoing and citywide projects are not included on the map. To view additional information and detailed maps, please visit the City's Budget Transparency Portal at https://Riverside.OpenBook.Questica.com.



This Page Intentionally Left Blank

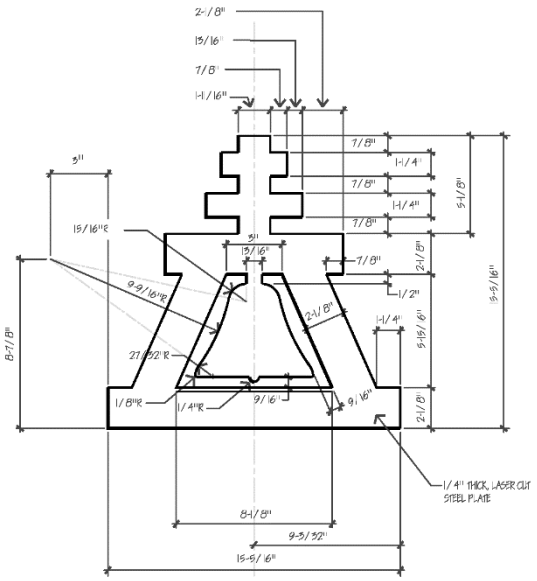

ARLINGTON PARK SITE IMPROVEMENTS

PRIORITIZATION CATEGORIES

- ☒ Risk to Health, Safety and Environment
- ☒ Regulatory or Mandated Requirements
- ☒ Asset Condition, Annual Recurring Costs, and Asset Longevity
- ☒ Community Investment and Economic Prosperity
- ☒ Level and Quality of Service
- ☒ Sustainability and Conservation
- ☒ Funding Availability
- ☒ Project Readiness
- ☐ Multiple Category Benefit and Bundling Opportunities

NEW OR EXISTING

- ☐ New Infrastructure or Facility
- ☒ Existing Infrastructure or Facility



PROJECT NUMBER 9233 **COUNCIL WARD** 5
PROJECT CATEGORY Parks, Recreation & Community Services
PROJECT LOCATION Arlington Park, 3860 Van Buren Boulevard

PROJECT DESCRIPTION
This project will add site improvements in support of the Bourns Family Youth Innovation Center including renovation of existing adjacent tennis courts with new fencing, dedicated pickleball courts, picnic area improvements, lighting improvements, concrete paving, ADA access improvements, updated furnishings, minor grading and drainage improvements, as well as modifications to irrigation and planting.

PROJECT STATUS
Construction is in progress and anticipated to be completed in Summer 2026.

OPERATING BUDGET IMPACT
The existing site is currently being maintained and the improvements will not increase those costs.

PROJECT FUNDING OVERVIEW

Total Project Cost	Prior Years Funding*	Five-Year Plan	Remaining Needed
$ 2,570,532	$ 2,570,532	$ -	$ -

TWO-YEAR BUDGET AND FIVE-YEAR PLAN

Funding Source	FY 2026/27	FY 2027/28	FY 2028/29	FY 2029/30	FY 2030/31	Total
N/A	$ -	$ -	$ -	$ -	$ -	$ -
Total Funding	**$ -**	**$ -**	**$ -**	**$ -**	**$ -**	**$ -**

**Prior year funding was transferred from the Bourns Family Youth Innovation Center project balances and includes 2007 RDA Bond Proceeds.*

BOBBY BONDS SKATE PARK

PRIORITIZATION CATEGORIES

- ☒ Risk to Health, Safety and Environment
- ☒ Regulatory or Mandated Requirements
- ☒ Asset Condition, Annual Recurring Costs, and Asset Longevity
- ☒ Community Investment and Economic Prosperity
- ☒ Level and Quality of Service
- ☐ Sustainability and Conservation
- ☒ Funding Availability
- ☐ Project Readiness
- ☐ Multiple Category Benefit and Bundling Opportunities

NEW OR EXISTING

- ☐ New Infrastructure or Facility
- ☒ Existing Infrastructure or Facility



PROJECT NUMBER 9296 **COUNCIL WARD** 1
PROJECT CATEGORY Parks, Recreation & Community Services
PROJECT LOCATION Bobby Bonds Park, 2060 University Avenue

PROJECT DESCRIPTION
This project will revitalize the 24,000-square-foot skate park at Bobby Bonds Park through a full replacement of the existing facility, which has significantly deteriorated due to years of heavy use and exposure to the elements. The new skate park will be thoughtfully designed with input from the skating community to prioritize safety, long-term durability, and an improved user experience. Once complete, it will provide a vibrant, modern space where skaters of all ages and skill levels can gather, practice, and enjoy the sport in a welcoming and high-quality environment.

PROJECT STATUS
The design-build contract was awarded in 2025 and design work is underway. Construction is planned to start in Spring 2026 with an estimated completion date of early 2027.

OPERATING BUDGET IMPACT
As a full replacement of an existing facility, this project will not add new operating costs. All maintenance will be absorbed by the current Parks operating budget. The use of modern, durable materials is expected to reduce long-term repair needs and costs.

PROJECT FUNDING OVERVIEW

Total Project Cost	Prior Years Funding	Five-Year Plan	Remaining Needed
$ 500,000	$ 500,000	$ -	$ -

TWO-YEAR BUDGET AND FIVE-YEAR PLAN

Funding Source	FY 2026/27	FY 2027/28	FY 2028/29	FY 2029/30	FY 2030/31	Total
N/A	$ -	$ -	$ -	$ -	$ -	$ -
Total Funding	**$ -**	**$ -**	**$ -**	**$ -**	**$ -**	**$ -**

BORDWELL PARK GYMNASIUM

PRIORITIZATION CATEGORIES

- ☐ Risk to Health, Safety and Environment
- ☐ Regulatory or Mandated Requirements
- ☐ Asset Condition, Annual Recurring Costs, and Asset Longevity
- ☒ Community Investment and Economic Prosperity
- ☒ Level and Quality of Service
- ☐ Sustainability and Conservation
- ☒ Funding Availability
- ☒ Project Readiness
- ☐ Multiple Category Benefit and Bundling Opportunities

NEW OR EXISTING

- ☒ New Infrastructure or Facility
- ☐ Existing Infrastructure or Facility



PROJECT NUMBER 2769 **COUNCIL WARD** 1
PROJECT CATEGORY Parks, Recreation & Community Services
PROJECT LOCATION Bordwell Park, 2008 Martin Luther King Boulevard

PROJECT DESCRIPTION
This project is for the design and construction of a gymnasium at Bordwell Park. The gym would be designed with conservation in mind to be as environmentally friendly and energy efficient as possible. It would also encourage and provide access to physical fitness & health exercise equipment to any/all park users.

PROJECT STATUS
Design is completed. Construction is expected to start Summer 2026 and completion is planned for July 2027.

OPERATING BUDGET IMPACT
Approximately $55,000 in operating costs will be incurred annually upon completion of the gymnasium. Major ongoing costs include utilities, janitorial services, maintenance, and property insurance. Operating impacts will be adjusted as the project gets nearer to completion to adjust for inflationary increases.

PROJECT FUNDING OVERVIEW

Total Project Cost	Prior Years Funding	Five-Year Plan	Remaining Needed
$ 9,000,020	$ 9,000,020	$ -	$ -

TWO-YEAR BUDGET AND FIVE-YEAR PLAN

Funding Source	FY 2026/27	FY 2027/28	FY 2028/29	FY 2029/30	FY 2030/31	Total
N/A	$ -	$ -	$ -	$ -	$ -	$ -
Total Funding	**$ -**	**$ -**	**$ -**	**$ -**	**$ -**	**$ -**

BORDWELL PARK SLURRY/STRIPE PARKING LOTS

PRIORITIZATION CATEGORIES

- ☒ Risk to Health, Safety and Environment
- ☒ Regulatory or Mandated Requirements
- ☒ Asset Condition, Annual Recurring Costs, and Asset Longevity
- ☒ Community Investment and Economic Prosperity
- ☒ Level and Quality of Service
- ☐ Sustainability and Conservation
- ☒ Funding Availability
- ☒ Project Readiness
- ☒ Multiple Category Benefit and Bundling Opportunities

NEW OR EXISTING

- ☐ New Infrastructure or Facility
- ☒ Existing Infrastructure or Facility



PROJECT NUMBER 2762 **COUNCIL WARD** 1
PROJECT CATEGORY Parks, Recreation & Community Services
PROJECT LOCATION Bordwell Park, 2008 Martin Luther King Boulevard

PROJECT DESCRIPTION
This project will update and refurbish the parking lots at Bordwell Park by adding a new slurry seal coating and new striping. This will enhance facilities, provide additional safety and security by removing accessibility barriers and tripping hazards, and increase the visibility of parking spaces, loading zones, and traffic flow.

PROJECT STATUS
Construction has been completed; project is in the administrative closeout phase. The project is expected to be completed in Summer 2026.

OPERATING BUDGET IMPACT
The existing parking lot is currently maintained. The refurbishment of the parking lot is not anticipated to increase routine maintenance costs.

PROJECT FUNDING OVERVIEW

Total Project Cost	Prior Years Funding	Five-Year Plan	Remaining Needed
$ 167,500	$ 167,500	$ -	-

TWO-YEAR BUDGET AND FIVE-YEAR PLAN

Funding Source	FY 2026/27	FY 2027/28	FY 2028/29	FY 2029/30	FY 2030/31	Total
N/A	$ -	$ -	$ -	$ -	$ -	$ -
Total Funding	**$ -**	**$ -**	**$ -**	**$ -**	**$ -**	**$ -**

CESAR CHAVEZ ART CENTER

PRIORITIZATION CATEGORIES

- ☒ Risk to Health, Safety and Environment
- ☒ Regulatory or Mandated Requirements
- ☒ Asset Condition, Annual Recurring Costs, and Asset Longevity
- ☒ Community Investment and Economic Prosperity
- ☒ Level and Quality of Service
- ☒ Sustainability and Conservation
- ☒ Funding Availability
- ☐ Project Readiness
- ☐ Multiple Category Benefit and Bundling Opportunities

NEW OR EXISTING

- ☐ New Infrastructure or Facility
- ☒ Existing Infrastructure or Facility



PROJECT NUMBER 4102 **COUNCIL WARD** 1
PROJECT CATEGORY Parks, Recreation & Community Services
PROJECT LOCATION 2060 University Avenue

PROJECT DESCRIPTION
This project involves renovating the 45,000-square-foot Cesar Chavez Community Center into an Academy for the Arts Community Center. Improvements will include the installation of LED lighting, sound barriers, electrical upgrades, Wi-Fi hot spots, a Bluetooth audio system, and additional storage.

PROJECT STATUS
The General Services Department is partnering with PRCSD on this project. Project is in construction phase, marked by contractor mobilization, site preparation, and the start of vertical construction in accordance with approved plans and specifications. Anticipated completion date is late 2026.

OPERATING BUDGET IMPACT
The Community Center is an existing City facility and as such is already being maintained. Operating costs are not anticipated to change significantly due to this project.

PROJECT FUNDING OVERVIEW

Total Project Cost	Prior Years Funding	Five-Year Plan	Remaining Needed
$ 25,000,000	$ 25,000,000	$ -	$ -

TWO-YEAR BUDGET AND FIVE-YEAR PLAN

Funding Source	FY 2026/27	FY 2027/28	FY 2028/29	FY 2029/30	FY 2030/31	Total
N/A	$ -	$ -	$ -	$ -	$ -	$ -
Total Funding	**$ -**	**$ -**	**$ -**	**$ -**	**$ -**	**$ -**

CITYWIDE PARK IMPROVEMENTS

PRIORITIZATION CATEGORIES

- ☒ Risk to Health, Safety and Environment
- ☒ Regulatory or Mandated Requirements
- ☒ Asset Condition, Annual Recurring Costs, and Asset Longevity
- ☒ Community Investment and Economic Prosperity
- ☒ Level and Quality of Service
- ☐ Sustainability and Conservation
- ☒ Funding Availability
- ☒ Project Readiness
- ☒ Multiple Category Benefit and Bundling Opportunities

NEW OR EXISTING

- ☐ New Infrastructure or Facility
- ☒ Existing Infrastructure or Facility



PROJECT NUMBER 2795 **COUNCIL WARD** All Wards
PROJECT CATEGORY Parks, Recreation & Community Services
PROJECT LOCATION Citywide

PROJECT DESCRIPTION
The Citywide Park Improvements project prioritizes park projects that address safety concerns, compliance, and public health improvements. These priority deferred maintenance items include, but are not limited to, playground replacements, playground surfacing replacements, HVAC replacements, parking lot renovations, and flooring renovations distributed equitably throughout all wards. The project is funded by a combination of American Rescue Plan Act (ARPA) grant funds and General Fund.

PROJECT STATUS
Work at all but three playgrounds has been completed. The last three are in construction and planned for completion in Summer 2026.

OPERATING BUDGET IMPACT
This project replaces or repairs existing park infrastructure and will not require additional operating and maintenance costs.

PROJECT FUNDING OVERVIEW

Total Project Cost	Prior Years Funding	Five-Year Plan	Remaining Needed
$ 9,992,441	$ 9,992,441	$ -	$ -

TWO-YEAR BUDGET AND FIVE-YEAR PLAN

Funding Source	FY 2026/27	FY 2027/28	FY 2028/29	FY 2029/30	FY 2030/31	Total
N/A	$ -	$ -	$ -	$ -	$ -	$ -
Total Funding	**$ -**	**$ -**	**$ -**	**$ -**	**$ -**	**$ -**

FAIRMOUNT PARK ARMORY CONVERSION

PRIORITIZATION CATEGORIES

- ☒ Risk to Health, Safety and Environment
- ☒ Regulatory or Mandated Requirements
- ☒ Asset Condition, Annual Recurring Costs, and Asset Longevity
- ☒ Community Investment and Economic Prosperity
- ☒ Level and Quality of Service
- ☒ Sustainability and Conservation
- ☒ Funding Availability
- ☒ Project Readiness
- ☒ Multiple Category Benefit and Bundling Opportunities

NEW OR EXISTING

- ☐ New Infrastructure or Facility
- ☒ Existing Infrastructure or Facility



PROJECT NUMBER 2828 **COUNCIL WARD** 1
PROJECT CATEGORY Parks, Recreation & Community Services
PROJECT LOCATION Fairmount Park, 2601 Fairmount Boulevard

PROJECT DESCRIPTION
This project will facilitate the transformation of the historic 12,000-square-foot National Guard Armory in Fairmount Park into a vibrant, multi-use arts and recreation community asset. A $2.5 million federal grant will be used for environmental cleanup of potential soil contamination, building stabilization, and renovations to bring the 1959 structure up to current code. The project's purpose is to rejuvenate a key entrance to downtown, improve quality of life, and increase access to cultural and park activities for residents, particularly those in surrounding low- and moderate-income neighborhoods, as part of the "Put the River Back in Riverside" initiative.

PROJECT STATUS
This project is in the Procurement phase. Following a Request for Proposals, the City is selecting a design-build firm and negotiating with operators for the restaurant and courts. Design is planned to begin in Summer 2026, with completion estimated for late 2028.

OPERATING BUDGET IMPACT
Operating costs for the brewery, restaurant, and pickleball courts are expected to be fully covered by concessionaire lease agreements. The City will continue to fund exterior grounds maintenance from the existing park budget. The operating costs of this project are anticipated to be cost-neutral.

PROJECT FUNDING OVERVIEW

Total Project Cost	Prior Years Funding	Five-Year Plan	Remaining Needed
$ 2,500,000	$ 2,500,000	$ -	$ -

TWO-YEAR BUDGET AND FIVE-YEAR PLAN

Funding Source	FY 2026/27	FY 2027/28	FY 2028/29	FY 2029/30	FY 2030/31	Total
N/A	$ -	$ -	$ -	$ -	$ -	$ -
Total Funding	**$ -**	**$ -**	**$ -**	**$ -**	**$ -**	**$ -**

FAIRMOUNT PARK GOLF CART BARN

PRIORITIZATION CATEGORIES

- ☒ Risk to Health, Safety and Environment
- ☐ Regulatory or Mandated Requirements
- ☐ Asset Condition, Annual Recurring Costs, and Asset Longevity
- ☐ Community Investment and Economic Prosperity
- ☒ Level and Quality of Service
- ☐ Sustainability and Conservation
- ☒ Funding Availability
- ☐ Project Readiness
- ☒ Multiple Category Benefit and Bundling Opportunities

NEW OR EXISTING

- ☒ New Infrastructure or Facility
- ☐ Existing Infrastructure or Facility



PROJECT NUMBER 9261 **COUNCIL WARD** 1
PROJECT CATEGORY Parks, Recreation & Community Services
PROJECT LOCATION Fairmount Park, 2601 Fairmount Boulevard

PROJECT DESCRIPTION
This project will construct a prefabricated storage barn to house approximately 35 golf carts at Fairmount Park Golf Course. The barn will be equipped with charging stations to recharge the golf carts while in storage, and security cameras will be installed to prevent vandalism and theft.

PROJECT STATUS
Plans are in permit plan check. Construction is anticipated to begin in Spring 2026 and be completed by Summer 2026.

OPERATING BUDGET IMPACT
There will be an increase in electric costs due to additional charging stations and lighting. In addition, security cameras will require a monthly monitoring fee of approximately $80/month.

PROJECT FUNDING OVERVIEW

Total Project Cost	Prior Years Funding	Five-Year Plan	Remaining Needed
$ 175,000	$ 175,000	$ -	$ -

TWO-YEAR BUDGET AND FIVE-YEAR PLAN

Funding Source	FY 2026/27	FY 2027/28	FY 2028/29	FY 2029/30	FY 2030/31	Total
N/A	$ -	$ -	$ -	$ -	$ -	$ -
Total Funding	**$ -**	**$ -**	**$ -**	**$ -**	**$ -**	**$ -**

FAIRMOUNT PARK LAKE DREDGING

PRIORITIZATION CATEGORIES

- ☒ Risk to Health, Safety and Environment
- ☒ Regulatory or Mandated Requirements
- ☒ Asset Condition, Annual Recurring Costs, and Asset Longevity
- ☒ Community Investment and Economic Prosperity
- ☒ Level and Quality of Service
- ☐ Sustainability and Conservation
- ☐ Funding Availability
- ☐ Project Readiness
- ☒ Multiple Category Benefit and Bundling Opportunities

NEW OR EXISTING

- ☐ New Infrastructure or Facility
- ☒ Existing Infrastructure or Facility



PROJECT NUMBER 9301 **COUNCIL WARD** 1
PROJECT CATEGORY Parks, Recreation & Community Services
PROJECT LOCATION Fairmount Park, 2601 Fairmount Boulevard

PROJECT DESCRIPTION
Lake Dredging (20,000 cubic yards) every 5 years within Fairmount Park to improve water quality, restore aquatic habitats, and enhance the overall health and appearance of the lake. This process involves removing accumulated sediment and debris from the lakebed, which over time can reduce water depth, increase flooding risk, and negatively impact wildlife. Once completed, the dredging will support a more sustainable ecosystem, provide better recreational opportunities, and help maintain the lake as a valuable natural resource for the community.

PROJECT STATUS
The dredging work is complete. Disposition of the sediment that was removed will be completed in late 2026.

OPERATING BUDGET IMPACT
Existing park and lake are already maintained. No operating cost changes anticipated for this work.

PROJECT FUNDING OVERVIEW

Total Project Cost	Prior Years Funding	Five-Year Plan	Remaining Needed
$ 1,138,750	$ 1,138,750	$ -	$ -

TWO-YEAR BUDGET AND FIVE-YEAR PLAN

Funding Source	FY 2026/27	FY 2027/28	FY 2028/29	FY 2029/30	FY 2030/31	Total
N/A	$ -	$ -	$ -	$ -	$ -	$ -
Total Funding	**$ -**	**$ -**	**$ -**	**$ -**	**$ -**	**$ -**

FAIRMOUNT PARK LAKE EVANS LAKESHORE ACCESS

PRIORITIZATION CATEGORIES

- ☒ Risk to Health, Safety and Environment
- ☐ Regulatory or Mandated Requirements
- ☐ Asset Condition, Annual Recurring Costs, and Asset Longevity
- ☒ Community Investment and Economic Prosperity
- ☒ Level and Quality of Service
- ☐ Sustainability and Conservation
- ☒ Funding Availability
- ☒ Project Readiness
- ☒ Multiple Category Benefit and Bundling Opportunities

NEW OR EXISTING

- ☒ New Infrastructure or Facility
- ☐ Existing Infrastructure or Facility



PROJECT NUMBER 9099 **COUNCIL WARD** 1
PROJECT CATEGORY Parks, Recreation & Community Services
PROJECT LOCATION 2601 Fairmount Boulevard

PROJECT DESCRIPTION

The project will improve walkways along Lake Evans shore, including minor grading, drainage, foundation piles, lighting, and furnishing improvements. The project will be composed of three phases as follows:

Phase I - Design and construction of an Americans with Disabilities Act (ADA) accessible pedestrian walkway along Dexter Drive from the American Legion (Post 79) to the Isaak Walton Building.

Phase II - Design and construction of an ADA-accessible pedestrian walkway along Dexter Drive from approximately the Isaak Walton Building to the Redwood Drive Bridge.

Phase III - Design and construction of an ADA-accessible pedestrian walkway and decking/railing expansion along the Redwood Drive Bridge.

PROJECT STATUS

Phase I design is complete. There is currently no funding for Phases II and III. This project is on hold until after the Fairmount Park Master Plan is completed and adopted, and until full funding is secured.

OPERATING BUDGET IMPACT

The addition of the Lakeshore Pedestrian Access will not impact the operating budget. The site is currently developed, and the improvements will not create additional operating impact.

PROJECT FUNDING OVERVIEW

Total Project Cost	Prior Years Funding	Five-Year Plan	Remaining Needed
$ 950,000	$ 475,000	$ -	$ 475,000

TWO-YEAR BUDGET AND FIVE-YEAR PLAN

Funding Source	FY 2026/27	FY 2027/28	FY 2028/29	FY 2029/30	FY 2030/31	Total
N/A	$ -	$ -	$ -	$ -	$ -	$ -
Total Funding	**$ -**	**$ -**	**$ -**	**$ -**	**$ -**	**$ -**

FAIRMOUNT PARK LAKE EVANS WEIR BOX REPAIR

PRIORITIZATION CATEGORIES

- ☐ Risk to Health, Safety and Environment
- ☐ Regulatory or Mandated Requirements
- ☒ Asset Condition, Annual Recurring Costs, and Asset Longevity
- ☒ Community Investment and Economic Prosperity
- ☒ Level and Quality of Service
- ☐ Sustainability and Conservation
- ☐ Funding Availability
- ☐ Project Readiness
- ☒ Multiple Category Benefit and Bundling Opportunities

NEW OR EXISTING

- ☐ New Infrastructure or Facility
- ☒ Existing Infrastructure or Facility



PROJECT NUMBER 9229 **COUNCIL WARD** 1
PROJECT CATEGORY Parks, Recreation & Community Services
PROJECT LOCATION Fairmount Park, 2601 Fairmount Boulevard

PROJECT DESCRIPTION
This project involves the repair and replacement of the inoperable Weir Dam at Lake Evans. The dam, which consists of a metal slide gate operable by a turn wheel, currently has a damaged turn-wheel stem that prevents the gate from being opened. Additionally, overgrown tree roots obstruct access. The project also addresses the blockage of Fairmount Park's storm drain outlet by sediment, which causes flooding during rain events. Clearing the outlet will restore water flow and eliminate flooding.

PROJECT STATUS
The weir box repair is complete. Construction is expected to be completed by Summer 2027.

OPERATING BUDGET IMPACT
The existing site is currently maintained. The weir box and storm drain repair are not anticipated to significantly alter routine maintenance costs.

PROJECT FUNDING OVERVIEW

Total Project Cost	Prior Years Funding	Five-Year Plan	Remaining Needed
$ 1,111,243	$ 1,111,243	$ -	$ -

TWO-YEAR BUDGET AND FIVE-YEAR PLAN

Funding Source	FY 2026/27	FY 2027/28	FY 2028/29	FY 2029/30	FY 2030/31	Total
N/A	$ -	$ -	$ -	$ -	$ -	$ -
Total Funding	**$ -**	**$ -**	**$ -**	**$ -**	**$ -**	**$ -**

FAIRMOUNT PARK MASTER PLAN

PRIORITIZATION CATEGORIES

- ☐ Risk to Health, Safety and Environment
- ☐ Regulatory or Mandated Requirements
- ☒ Asset Condition, Annual Recurring Costs, and Asset Longevity
- ☒ Community Investment and Economic Prosperity
- ☒ Level and Quality of Service
- ☒ Sustainability and Conservation
- ☐ Funding Availability
- ☐ Project Readiness
- ☐ Multiple Category Benefit and Bundling Opportunities

NEW OR EXISTING

- ☒ New Infrastructure or Facility
- ☐ Existing Infrastructure or Facility



PROJECT NUMBER 9293 **COUNCIL WARD** 1
PROJECT CATEGORY Parks, Recreation & Community Services
PROJECT LOCATION Fairmount Park, 2601 Fairmount Boulevard

PROJECT DESCRIPTION
This project funds the development of a Park Master Plan for the 200+-acre Fairmount Park. The plan will establish a long-range vision and implementation strategy for future park improvements, shaped by extensive community input. It will address key areas including landscape enhancements, circulation, recreational amenities, environmental sustainability, and the preservation of historical features. The resulting document will serve as a guiding framework for the next 15-20 years, ensuring the park continues to meet the evolving needs of the community and remains a premier cultural and recreational destination.

PROJECT STATUS
This project is a planning document. The document has been drafted and is available for public review and comment. The master plan is scheduled for completion in Summer 2026.

OPERATING BUDGET IMPACT
No additional operating budget impact is anticipated. This project is for the development of a master plan only. Future projects identified in the plan will have their operating budget impacts assessed individually.

PROJECT FUNDING OVERVIEW

Total Project Cost	Prior Years Funding	Five-Year Plan	Remaining Needed
$ 310,200	$ 310,200	$ -	$ -

TWO-YEAR BUDGET AND FIVE-YEAR PLAN

Funding Source	FY 2026/27	FY 2027/28	FY 2028/29	FY 2029/30	FY 2030/31	Total
N/A	$ -	$ -	$ -	$ -	$ -	$ -
Total Funding	**$ -**	**$ -**	**$ -**	**$ -**	**$ -**	**$ -**

FAIRMOUNT PARK ROSE GARDEN IMPROVEMENTS

PRIORITIZATION CATEGORIES

- ☐ Risk to Health, Safety and Environment
- ☐ Regulatory or Mandated Requirements
- ☒ Asset Condition, Annual Recurring Costs, and Asset Longevity
- ☒ Community Investment and Economic Prosperity
- ☒ Level and Quality of Service
- ☐ Sustainability and Conservation
- ☐ Funding Availability
- ☐ Project Readiness
- ☒ Multiple Category Benefit and Bundling Opportunities

NEW OR EXISTING

- ☐ New Infrastructure or Facility
- ☒ Existing Infrastructure or Facility



PROJECT NUMBER 9181 **COUNCIL WARD** 1
PROJECT CATEGORY Parks, Recreation & Community Services
PROJECT LOCATION Fairmount Park, 2601 Fairmount Boulevard

PROJECT DESCRIPTION
This project will refurbish and enhance existing facilities, expand accessibility for disabled users, and provide water conservation improvements by removing turf, installing water-efficient drip irrigation, and installing a smart controller to substantially reduce water consumption. The project will be composed of two phases as follows:

Phase I - ADA and gazebo improvements, including turf replacement with ADA decomposed granite walking paths.

Phase II - Landscape and irrigation water conservation improvements including grading, drainage, planting, upgraded controller and drip irrigation, and furnishing improvements.

PROJECT STATUS
The project is underway and completion is anticipated by Summer 2026.

OPERATING BUDGET IMPACT
The renovation of the rose garden will not impact the operating budget. The site is currently developed, and the improvements will not increase costs.

PROJECT FUNDING OVERVIEW			
Total Project Cost	Prior Years Funding	Five-Year Plan	Remaining Needed
$ 650,000	$ 650,000	$ -	$ -

TWO-YEAR BUDGET AND FIVE-YEAR PLAN						
Funding Source	FY 2026/27	FY 2027/28	FY 2028/29	FY 2029/30	FY 2030/31	Total
N/A	$ -	$ -	$ -	$ -	$ -	$ -
Total Funding	**$ -**	**$ -**	**$ -**	**$ -**	**$ -**	**$ -**

FAIRMOUNT PARK UNIVERSITY WASH RENOVATION

PRIORITIZATION CATEGORIES

- ☐ Risk to Health, Safety and Environment
- ☐ Regulatory or Mandated Requirements
- ☒ Asset Condition, Annual Recurring Costs, and Asset Longevity
- ☒ Community Investment and Economic Prosperity
- ☒ Level and Quality of Service
- ☐ Sustainability and Conservation
- ☐ Funding Availability
- ☐ Project Readiness
- ☒ Multiple Category Benefit and Bundling Opportunities

NEW OR EXISTING

- ☐ New Infrastructure or Facility
- ☒ Existing Infrastructure or Facility



PROJECT NUMBER 9294 **COUNCIL WARD** 1
PROJECT CATEGORY Parks, Recreation & Community Services
PROJECT LOCATION 2601 Fairmount Boulevard

PROJECT DESCRIPTION
The project involves the re-engineering of the 900-foot downstream section of University Wash, beginning at Market Street. The improvements will restore the channel's stormwater capacity, enhance functionality and aesthetics, mitigate flooding, reduce sedimentation in the Fairmount Park lake system, and improve overall safety.

PROJECT STATUS
The project is in the Design phase. Design and engineering are underway and scheduled for completion in 2026, with regulatory permitting to follow. Construction is planned to begin in 2027, with project completion estimated for late 2028.

OPERATING BUDGET IMPACT
Maintenance costs are expected to increase by $25,000 per year to maintain the Wash and $1,500,000 every 3-5 years to dredge the lakes. Any dredging identified after the project's completion will be their own projects with separate funding at that time.

PROJECT FUNDING OVERVIEW

Total Project Cost	Prior Years Funding	Five-Year Plan	Remaining Needed
$ 5,625,000	$ 2,000,000	$ -	$ 3,625,000

TWO-YEAR BUDGET AND FIVE-YEAR PLAN

Funding Source	FY 2026/27	FY 2027/28	FY 2028/29	FY 2029/30	FY 2030/31	Total
N/A	$ -	$ -	$ -	$ -	$ -	$ -
Total Funding	**$ -**	**$ -**	**$ -**	**$ -**	**$ -**	**$ -**

GAGE CANAL TRAIL IMPROVEMENTS

PRIORITIZATION CATEGORIES

- ☐ Risk to Health, Safety and Environment
- ☐ Regulatory or Mandated Requirements
- ☐ Asset Condition, Annual Recurring Costs, and Asset Longevity
- ☒ Community Investment and Economic Prosperity
- ☒ Level and Quality of Service
- ☐ Sustainability and Conservation
- ☐ Funding Availability
- ☐ Project Readiness
- ☐ Multiple Category Benefit and Bundling Opportunities

NEW OR EXISTING

- ☒ New Infrastructure or Facility
- ☒ Existing Infrastructure or Facility



PROJECT NUMBER 4092 **COUNCIL WARD** 2, 3
PROJECT CATEGORY Parks, Recreation & Community Services
PROJECT LOCATION Citywide

PROJECT DESCRIPTION

Phase I of the project includes the development of approximately 2.0 miles of the Gage Canal for recreational trail use as well as commuters using active transportation modes such as bicycles, skates, and scooters. The trail will have solar lighting and trees will line the corridor to provide shade and to sequester carbon for greenhouse gas reduction benefits. Other support amenities include seating, bike racks, map boards, and signs. Interpretive material will be included on the map boards to highlight the historic nature of the Gage Canal and its role in the citrus industry in the Inland Empire Region.

PROJECT STATUS

Bids for Phase I construction were received in December 2022, but the costs exceeded the Urban Greening Program grant funds, necessitating a bid rejection. A second grant from the Recreational Trails Program has been awarded, and the agreement is being processed through state and federal grantors. The updated bid documents are being prepared for bidding in the first quarter of 2026. Estimated completion is Summer 2027.

OPERATING BUDGET IMPACT

Although improvements are designed to minimize maintenance demands, there will be additional operating budget needs. Public Works will maintain the Asphaltic Concrete (AC) paving path with in-house crews at an annual cost of $5,000 for materials to patch and repair the trail. Landscape operational costs are anticipated to be approximately $85,000 per year. Collaboration with the University of California, Riverside (UCR) and non-profits to collect trash is planned to reduce long-term operational costs.

PROJECT FUNDING OVERVIEW

Total Project Cost	Prior Years Funding	Five-Year Plan	Remaining Needed
$ 5,308,509	$ 5,308,509	$ -	$ -

TWO-YEAR BUDGET AND FIVE-YEAR PLAN

Funding Source	FY 2026/27	FY 2027/28	FY 2028/29	FY 2029/30	FY 2030/31	Total
N/A	$ -	$ -	$ -	$ -	$ -	$ -
Total Funding	**$ -**	**$ -**	**$ -**	**$ -**	**$ -**	**$ -**

HOLE LAKE MASTER PLAN

PRIORITIZATION CATEGORIES

- ☐ Risk to Health, Safety and Environment
- ☐ Regulatory or Mandated Requirements
- ☐ Asset Condition, Annual Recurring Costs, and Asset Longevity
- ☒ Community Investment and Economic Prosperity
- ☒ Level and Quality of Service
- ☐ Sustainability and Conservation
- ☐ Funding Availability
- ☐ Project Readiness
- ☐ Multiple Category Benefit and Bundling Opportunities

NEW OR EXISTING

- ☒ New Infrastructure or Facility
- ☐ Existing Infrastructure or Facility



PROJECT NUMBER 9335 **COUNCIL WARD** 7
PROJECT CATEGORY Parks, Recreation & Community Services
PROJECT LOCATION Hole Lake

PROJECT DESCRIPTION
This project funds the development of a Park Master Plan for the 61 acre Hole Lake site. The plan will establish a long-range vision and implementation strategy for future improvements. The City will hire a design team to evaluate opportunities and constraints for the site, and to work with the community to develop a plan for the site that meets the community's recreational needs.

PROJECT STATUS
A Request for Proposals is being prepared for public solicitation to hire a consultant team to prepare the Hole Lake Park Master Plan. Completion of the plan is anticipated to be in early 2028.

OPERATING BUDGET IMPACT
This project is a planning study and has no direct impact on the operating budget. Future capital projects identified by this plan will have their operating impacts detailed when they are individually proposed for funding.

PROJECT FUNDING OVERVIEW

Total Project Cost	Prior Years Funding	Five-Year Plan	Remaining Needed
$ 300,000	$ 300,000	$ -	$ -

TWO-YEAR BUDGET AND FIVE-YEAR PLAN

Funding Source	FY 2026/27	FY 2027/28	FY 2028/29	FY 2029/30	FY 2030/31	Total
N/A	$ -	$ -	$ -	$ -	$ -	$ -
Total Funding	**$ -**	**$ -**	**$ -**	**$ -**	**$ -**	**$ -**

MARCY LIBRARY OFFICE RENOVATIONS

PRIORITIZATION CATEGORIES

- ☐ Risk to Health, Safety and Environment
- ☐ Regulatory or Mandated Requirements
- ☒ Asset Condition, Annual Recurring Costs, and Asset Longevity
- ☐ Community Investment and Economic Prosperity
- ☒ Level and Quality of Service
- ☐ Sustainability and Conservation
- ☒ Funding Availability
- ☒ Project Readiness
- ☐ Multiple Category Benefit and Bundling Opportunities

NEW OR EXISTING

- ☐ New Infrastructure or Facility
- ☒ Existing Infrastructure or Facility



PROJECT NUMBER 9259 **COUNCIL WARD** 3
PROJECT CATEGORY Parks, Recreation & Community Services
PROJECT LOCATION 6927 Magnolia Avenue

PROJECT DESCRIPTION
This project involves reconfiguring and renovating the existing Parks and Recreation offices on the second floor of the Marcy Library to create modern and upgraded office space and cubicles for additional staff.

PROJECT STATUS
Construction of the office renovations has been completed. The project is in the administrative closeout phase with completion expected in December 2026.

OPERATING BUDGET IMPACT
The second floor is currently maintained, and the renovations are not expected to increase routine maintenance costs.

PROJECT FUNDING OVERVIEW

Total Project Cost	Prior Years Funding	Five-Year Plan	Remaining Needed
$ 75,000	$ 75,000	$ -	$ -

TWO-YEAR BUDGET AND FIVE-YEAR PLAN

Funding Source	FY 2026/27	FY 2027/28	FY 2028/29	FY 2029/30	FY 2030/31	Total
N/A	$ -	$ -	$ -	$ -	$ -	$ -
Total Funding	**$ -**	**$ -**	**$ -**	**$ -**	**$ -**	**$ -**

MARTHA MCLEAN PARK VEHICULAR ACCESS BARRIERS

PRIORITIZATION CATEGORIES

- ☒ Risk to Health, Safety and Environment
- ☒ Regulatory or Mandated Requirements
- ☒ Asset Condition, Annual Recurring Costs, and Asset Longevity
- ☒ Community Investment and Economic Prosperity
- ☒ Level and Quality of Service
- ☐ Sustainability and Conservation
- ☒ Funding Availability
- ☒ Project Readiness
- ☒ Multiple Category Benefit and Bundling Opportunities

NEW OR EXISTING

- ☐ New Infrastructure or Facility
- ☒ Existing Infrastructure or Facility



PROJECT NUMBER 9251 **COUNCIL WARD** 3
PROJECT CATEGORY Parks, Recreation & Community Services
PROJECT LOCATION Martha McLean Park, 5759 Jurupa Avenue

PROJECT DESCRIPTION
The project will improve security by restricting vehicle access to the park with the installation of vehicular access gates. These gates will prevent unauthorized vehicles from entering or leaving the park, and also restrict access to the Santa Ana River Trail system that borders the park.

PROJECT STATUS
Construction of the gates has been completed. The project is in the administrative closeout phase with completion expected in Summer 2026.

OPERATING BUDGET IMPACT
The vehicular access gates are not anticipated to significantly alter routine maintenance costs or impact the operating budget.

PROJECT FUNDING OVERVIEW

Total Project Cost	Prior Years Funding	Five-Year Plan	Remaining Needed
$ 290,000	$ 290,000	$ -	$ -

TWO-YEAR BUDGET AND FIVE-YEAR PLAN

Funding Source	FY 2026/27	FY 2027/28	FY 2028/29	FY 2029/30	FY 2030/31	Total
N/A	$ -	$ -	$ -	$ -	$ -	$ -
Total Funding	**$ -**	**$ -**	**$ -**	**$ -**	**$ -**	**$ -**

MOUNT RUBIDOUX TRAIL LANDSCAPE IMPROVEMENTS

PRIORITIZATION CATEGORIES

- ☐ Risk to Health, Safety and Environment
- ☐ Regulatory or Mandated Requirements
- ☒ Asset Condition, Annual Recurring Costs, and Asset Longevity
- ☒ Community Investment and Economic Prosperity
- ☒ Level and Quality of Service
- ☐ Sustainability and Conservation
- ☒ Funding Availability
- ☐ Project Readiness
- ☐ Multiple Category Benefit and Bundling Opportunities

NEW OR EXISTING

- ☐ New Infrastructure or Facility
- ☒ Existing Infrastructure or Facility



PROJECT NUMBER 9089 **COUNCIL WARD** 1
PROJECT CATEGORY Parks, Recreation & Community Services
PROJECT LOCATION Mount Rubidoux Park, 4706 Mount Rubidoux Drive

PROJECT DESCRIPTION
The project will consist of installing native plants behind a rock retaining wall at the base of the trail on the Carlson Park-side. The project will provide additional erosion control and beautification to an existing City amenity.

PROJECT STATUS
The project is currently in the planning phase, but is not fully funded, therefore there is no construction start date.

OPERATING BUDGET IMPACT
The existing site is currently maintained. The additional plants are not anticipated to significantly alter routine maintenance costs.

PROJECT FUNDING OVERVIEW

Total Project Cost	Prior Years Funding	Five-Year Plan	Remaining Needed
$ 300,000	$ 135,960	$ -	$ 164,040

TWO-YEAR BUDGET AND FIVE-YEAR PLAN

Funding Source	FY 2026/27	FY 2027/28	FY 2028/29	FY 2029/30	FY 2030/31	Total
N/A	$ -	$ -	$ -	$ -	$ -	$ -
Total Funding	**$ -**	**$ -**	**$ -**	**$ -**	**$ -**	**$ -**

NICHOLS PARK PLAYGROUND

PRIORITIZATION CATEGORIES

- ☒ Risk to Health, Safety and Environment
- ☐ Regulatory or Mandated Requirements
- ☒ Asset Condition, Annual Recurring Costs, and Asset Longevity
- ☒ Community Investment and Economic Prosperity
- ☒ Level and Quality of Service
- ☐ Sustainability and Conservation
- ☒ Funding Availability
- ☒ Project Readiness
- ☐ Multiple Category Benefit and Bundling Opportunities

NEW OR EXISTING

- ☒ New Infrastructure or Facility
- ☐ Existing Infrastructure or Facility



PROJECT NUMBER 9295 **COUNCIL WARD** 3
PROJECT CATEGORY Parks, Recreation & Community Services
PROJECT LOCATION Nichols Park, 555 Dewey Avenue

PROJECT DESCRIPTION
This project is to replace the existing playground and safety surfacing with new, and design and installation of new shade structures over the playgrounds at Nichols Park. The primary purpose is to improve sun safety for children and families, extending the usability of the playground during warmer months and enhancing the overall park experience and quality of life. The new assets have an estimated service life of about 7-10 years for the safety surfacing, 20 years for the playground equipment and shade structure, though the shade fabric may need to be replaced within 10-15 years.

PROJECT STATUS
Construction is underway and completion is planned for December 2026.

OPERATING BUDGET IMPACT
This project replaces an existing asset. The new shade structures are durable and require minimal maintenance, resulting in no net increase to the operating budget. All future upkeep will be absorbed by the existing Parks Division maintenance budget. Approximately $150,000 will be needed to replace the shade fabric in about 10-15 years.

PROJECT FUNDING OVERVIEW

Total Project Cost	Prior Years Funding	Five-Year Plan	Remaining Needed
$ 256,297	$ 256,297	$ -	$ -

TWO-YEAR BUDGET AND FIVE-YEAR PLAN

Funding Source	FY 2026/27	FY 2027/28	FY 2028/29	FY 2029/30	FY 2030/31	Total
N/A	$ -	$ -	$ -	$ -	$ -	$ -
Total Funding	**$ -**	**$ -**	**$ -**	**$ -**	**$ -**	**$ -**

ORANGE TERRACE PARK LOWER PLAYGROUND AND SHADE STRUCTURE

PRIORITIZATION CATEGORIES

- ☐ Risk to Health, Safety and Environment
- ☐ Regulatory or Mandated Requirements
- ☐ Asset Condition, Annual Recurring Costs, and Asset Longevity
- ☒ Community Investment and Economic Prosperity
- ☒ Level and Quality of Service
- ☐ Sustainability and Conservation
- ☐ Funding Availability
- ☐ Project Readiness
- ☒ Multiple Category Benefit and Bundling Opportunities

NEW OR EXISTING

- ☐ New Infrastructure or Facility
- ☒ Existing Infrastructure or Facility



PROJECT NUMBER 9345 **COUNCIL WARD** 4
PROJECT CATEGORY Parks, Recreation & Community Services
PROJECT LOCATION Orange Terrace Park

PROJECT DESCRIPTION
This project will replace the outdated equipment and worn poured in place rubber safety surfacing at the 8,000 square foot lower playground at Orange Terrace Park. Shade canopies will be integrated into the new playground structure to provide greater comfort to users during hot summers. The playground equipment is anticipated to last 20+ years, but the safety surfacing will need to be replaced approximately every seven to ten years.

PROJECT STATUS
Bid documents are being prepared for this project. The project will be publicly bid in Spring 2026. Construction is anticipated to start in Fall 2026, and completion is estimated for early 2027.

OPERATING BUDGET IMPACT
There is no anticipated increase in operating budget impact because this project replaces existing infrastructure that is already being maintained.

PROJECT FUNDING OVERVIEW

Total Project Cost	Prior Years Funding	Five-Year Plan	Remaining Needed
$ 500,000	$ 500,000	$ -	$ -

TWO-YEAR BUDGET AND FIVE-YEAR PLAN

Funding Source	FY 2026/27	FY 2027/28	FY 2028/29	FY 2029/30	FY 2030/31	Total
N/A	$ -	$ -	$ -	$ -	$ -	$ -
Total Funding	**$ -**	**$ -**	**$ -**	**$ -**	**$ -**	**$ -**

PARKS DEFERRED MAINTENANCE

PRIORITIZATION CATEGORIES

- ☒ Risk to Health, Safety and Environment
- ☒ Regulatory or Mandated Requirements
- ☒ Asset Condition, Annual Recurring Costs, and Asset Longevity
- ☒ Community Investment and Economic Prosperity
- ☒ Level and Quality of Service
- ☒ Sustainability and Conservation
- ☐ Funding Availability
- ☒ Project Readiness
- ☒ Multiple Category Benefit and Bundling Opportunities

NEW OR EXISTING

- ☐ New Infrastructure or Facility
- ☒ Existing Infrastructure or Facility



PROJECT NUMBER 2807 **COUNCIL WARD** All
PROJECT CATEGORY Parks, Recreation & Community Services
PROJECT LOCATION Citywide

PROJECT DESCRIPTION
This project addresses critical maintenance needs within our parks to enhance their overall quality and functionality for continued public enjoyment. Key areas of focus include but are not limited to, replacing outdated playgrounds and surfacing materials, ensuring heating, ventilation, and air conditioning (HVAC) systems are operational, renovating parking lots, rehabilitating public pools, and repairing or replacing park lighting and fencing.

PROJECT STATUS
This is an ongoing project to identify, prioritize, and carry out park maintenance needs. Projects are reviewed annually on an as-needed basis in order to rehabilitate the most at-need facilities.

OPERATING BUDGET IMPACT
There is no operating impact as a result of rehabilitating existing infrastructure; the repairs will not require additional operational or maintenance costs.

PROJECT FUNDING OVERVIEW

Total Project Cost	Prior Years Funding	Five-Year Plan	Remaining Needed
Ongoing	$ 4,213,414	$ 8,000,000	Ongoing

TWO-YEAR BUDGET AND FIVE-YEAR PLAN

Funding Source	FY 2026/27	FY 2027/28	FY 2028/29	FY 2029/30	FY 2030/31	Total
420 - Measure Z Capital	$ 2,000,000	$ 1,500,000	$ 1,500,000	$ 1,500,000	$ 1,500,000	$ 8,000,000
Total Funding	**$ 2,000,000**	**$ 1,500,000**	**$ 1,500,000**	**$ 1,500,000**	**$ 1,500,000**	**$ 8,000,000**

PATTERSON PARK RENOVATION

PRIORITIZATION CATEGORIES

- ☐ Risk to Health, Safety and Environment
- ☒ Regulatory or Mandated Requirements
- ☒ Asset Condition, Annual Recurring Costs, and Asset Longevity
- ☒ Community Investment and Economic Prosperity
- ☒ Level and Quality of Service
- ☒ Sustainability and Conservation
- ☒ Funding Availability
- ☒ Project Readiness
- ☒ Multiple Category Benefit and Bundling Opportunities

NEW OR EXISTING

- ☒ New Infrastructure or Facility
- ☒ Existing Infrastructure or Facility



PROJECT NUMBER 3397 **COUNCIL WARD** 1
PROJECT CATEGORY Parks, Recreation & Community Services
PROJECT LOCATION Patterson Park, 1846 W Linden Street

PROJECT DESCRIPTION
This project provides a comprehensive renovation of Patterson Park to replace aging infrastructure and expand recreational amenities. The renovation creates new multi-use sports fields, an ADA accessible basketball court, a splash pad with a water-conserving recirculating pump system, shaded playground, six-node fitness circuit, plaza with stage, and a promenade. Key infrastructure upgrades consist of a new restroom and storage building, pathway lighting, a perimeter wall, and a renovated parking lot. The project improves quality of life by providing safe and diverse outdoor activities for residents. The new improvements are meant to serve the community for the next 20-30 years, but this depends on the community's changing needs over time. Specific park improvements and components may need replacement sooner to address safety, code compliance, and outdated infrastructure.

PROJECT STATUS
Construction is underway and completion is planned for Fall 2026.

OPERATING BUDGET IMPACT
New amenities will increase annual operating costs. The new splash pad adds an estimated $6,000 per year for maintenance and utilities. This increase will be partially offset by savings from new energy-efficient LED lighting and drip irrigation systems.

PROJECT FUNDING OVERVIEW

Total Project Cost	Prior Years Funding	Five-Year Plan	Remaining Needed
$ 9,780,937	$ 9,780,937	$ -	$ -

TWO-YEAR BUDGET AND FIVE-YEAR PLAN

Funding Source	FY 2026/27	FY 2027/28	FY 2028/29	FY 2029/30	FY 2030/31	Total
N/A	$ -	$ -	$ -	$ -	$ -	$ -
Total Funding	**$ -**	**$ -**	**$ -**	**$ -**	**$ -**	**$ -**

RIVER DISTRICT FEASIBILITY STUDY

PRIORITIZATION CATEGORIES

- ☐ Risk to Health, Safety and Environment
- ☐ Regulatory or Mandated Requirements
- ☐ Asset Condition, Annual Recurring Costs, and Asset Longevity
- ☒ Community Investment and Economic Prosperity
- ☒ Level and Quality of Service
- ☒ Sustainability and Conservation
- ☒ Funding Availability
- ☐ Project Readiness
- ☐ Multiple Category Benefit and Bundling Opportunities

NEW OR EXISTING

- ☒ New Infrastructure or Facility
- ☐ Existing Infrastructure or Facility



PROJECT NUMBER 3490 **COUNCIL WARD** All Wards
PROJECT CATEGORY Parks, Recreation & Community Services
PROJECT LOCATION Citywide

PROJECT DESCRIPTION

This project funds the River District Feasibility Study, a comprehensive analysis for creating a vibrant public realm along the Santa Ana River. This project aims to address the underutilization of the Santa Ana River that flows along the northern edge of Riverside. Many residents are unaware of the river, lack easy access to it, and feel unsafe near it. The project aims to reconnect the community with the river by establishing the River District public realm. The River District will be designed with environmental and fiscal sustainability in mind, fostering a closer relationship between the city and its namesake waterway. The study evaluates potential recreational amenities, public access points, environmental restoration opportunities, and strategies for ensuring long-term fiscal sustainability.

PROJECT STATUS

The study has been completed, and a draft of the final document has been presented to the community for comments. The project is planned for completion in Summer 2026.

OPERATING BUDGET IMPACT

This project is a feasibility study for planning purposes. The project does not create a new physical asset. There is no direct impact to the operating budget. Future River District physical improvements and assets will be listed as individual capital improvement projects and operating impacts will be noted at that time.

PROJECT FUNDING OVERVIEW

Total Project Cost	Prior Years Funding	Five-Year Plan	Remaining Needed
$ 200,000	$ 200,000	$ -	$ -

TWO-YEAR BUDGET AND FIVE-YEAR PLAN

Funding Source	FY 2026/27	FY 2027/28	FY 2028/29	FY 2029/30	FY 2030/31	Total
N/A	$ -	$ -	$ -	$ -	$ -	$ -
Total Funding	**$ -**	**$ -**	**$ -**	**$ -**	**$ -**	**$ -**

SANTA ANA RIVER GATEWAY PARKS MASTER PLAN

PRIORITIZATION CATEGORIES

- ☒ Risk to Health, Safety and Environment
- ☐ Regulatory or Mandated Requirements
- ☐ Asset Condition, Annual Recurring Costs, and Asset Longevity
- ☒ Community Investment and Economic Prosperity
- ☒ Level and Quality of Service
- ☒ Sustainability and Conservation
- ☐ Funding Availability
- ☐ Project Readiness
- ☐ Multiple Category Benefit and Bundling Opportunities

NEW OR EXISTING

- ☒ New Infrastructure or Facility
- ☒ Existing Infrastructure or Facility



PROJECT NUMBER 3399 **COUNCIL WARD** 1, 3
PROJECT CATEGORY Parks, Recreation & Community Services
PROJECT LOCATION Santa Ana River

PROJECT DESCRIPTION
The Santa Ana River Gateway Parks Master Plan (Plan) project includes both the development of a master plan and the acquisition of property. The preparation of the Plan includes inventory and analysis documentation needed for environmental review, construction cost estimates, projected maintenance and operation costs, and conceptual design and grading plans, all for nine park and trail project sites along 4.7 miles of the Santa Ana River Parkway, from Fairmount Park to the Jurupa Ave Trailhead. The property acquisition is for four acres at 5200 Tequesquite Avenue.

PROJECT STATUS
The master plan for the greenway between Carlson Park and Rubidoux Boulevard has been completed. California Environmental Quality Act (CEQA) will be finalized in early 2026 and the Master Plan will be taken to City Council for adoption. The Master Plan is a precursor to future projects, which will be contingent upon the attainment of future grant funding. The project is anticipated to be complete in December 2026.

OPERATING BUDGET IMPACT
The development of the Santa Ana River Gateway Parks Master Plan will not impact the operating budget. The newly acquired 4-acre property will require miscellaneous maintenance costs such as weed abatement estimated to cost approximately $5,000/year.

PROJECT FUNDING OVERVIEW

Total Project Cost	Prior Years Funding	Five-Year Plan	Remaining Needed
$ 2,881,500	$ 2,881,500	$ -	$ -

TWO-YEAR BUDGET AND FIVE-YEAR PLAN

Funding Source	FY 2026/27	FY 2027/28	FY 2028/29	FY 2029/30	FY 2030/31	Total
N/A	$ -	$ -	$ -	$ -	$ -	$ -
Total Funding	**$ -**	**$ -**	**$ -**	**$ -**	**$ -**	**$ -**

SPECIAL TRANSPORTATION ZERO EMISSION INFRASTRUCTURE

PRIORITIZATION CATEGORIES

- ☐ Risk to Health, Safety and Environment
- ☒ Regulatory or Mandated Requirements
- ☐ Asset Condition, Annual Recurring Costs, and Asset Longevity
- ☐ Community Investment and Economic Prosperity
- ☐ Level and Quality of Service
- ☒ Sustainability and Conservation
- ☐ Funding Availability
- ☐ Project Readiness
- ☐ Multiple Category Benefit and Bundling Opportunities

NEW OR EXISTING

- ☒ New Infrastructure or Facility
- ☐ Existing Infrastructure or Facility



PROJECT NUMBER 4112 **COUNCIL WARD** 5
PROJECT CATEGORY Parks, Recreation & Community Services
PROJECT LOCATION City of Riverside Corporation Yard, 8095 Lincoln Avenue

PROJECT DESCRIPTION
This project will construct zero-emission fueling infrastructure at the Corporation Yard to support Riverside Connect's transition to a fully zero-emission paratransit fleet. Work includes installation of battery-electric charging infrastructure and hydrogen fueling infrastructure to accommodate a mixed fleet of zero-emission vehicles. The infrastructure will support various vehicle types as they become available. This project is required to comply with California's Innovative Clean Transit Regulation mandating 100% zero-emission transit fleets by 2040. These improvements will reduce carbon emissions, improve air quality and ensure reliable, sustainable transit service for seniors and persons with disabilities.

PROJECT STATUS
The project is in the planning and design phase. Construction is scheduled to begin in 2026 and is anticipated to be complete by December 2030 to support the agency's zero-emission fleet transition.

OPERATING BUDGET IMPACT
Following the installation of the zero-emission infrastructure, there will be no significant fiscal impact outside of annual equipment maintenance, which is absorbed in Special Transportation's operating budget.

PROJECT FUNDING OVERVIEW

Total Project Cost	Prior Years Funding	Five-Year Plan	Remaining Needed
$ 7,500,000	$ 5,392,073	$ -	$ 2,107,927

TWO-YEAR BUDGET AND FIVE-YEAR PLAN

Funding Source	FY 2026/27	FY 2027/28	FY 2028/29	FY 2029/30	FY 2030/31	Total
N/A	$ -	$ -	$ -	$ -	$ -	$ -
Total Funding	**$ -**	**$ -**	**$ -**	**$ -**	**$ -**	**$ -**

SYCAMORE CANYON WILDNERNESS PARK TRAILHEAD

PRIORITIZATION CATEGORIES

- ☐ Risk to Health, Safety and Environment
- ☐ Regulatory or Mandated Requirements
- ☐ Asset Condition, Annual Recurring Costs, and Asset Longevity
- ☒ Community Investment and Economic Prosperity
- ☒ Level and Quality of Service
- ☐ Sustainability and Conservation
- ☒ Funding Availability
- ☐ Project Readiness
- ☐ Multiple Category Benefit and Bundling Opportunities

NEW OR EXISTING

- ☒ New Infrastructure or Facility
- ☐ Existing Infrastructure or Facility



PROJECT NUMBER 9036 **COUNCIL WARD** 2
PROJECT CATEGORY Parks, Recreation & Community Services
PROJECT LOCATION Sycamore Canyon Wilderness Park, 400 Central Avenue

PROJECT DESCRIPTION
The project includes design, California Environmental Quality Act (CEQA) compliance, and construction of a permeable parking area along with trailhead support amenities on the west side of Sycamore Canyon Wilderness Park. The project has partial funding provided by SoCal Gas for a new domestic water service. The project will provide additional parking and access to trails and amenities within Sycamore Canyon Wilderness Park.

PROJECT STATUS
The Parks division is currently gathering site information to prepare a conceptual design, which is to be completed by the fourth quarter of 2026. The conceptual design will then be used to support grant applications to fund design development, California Environmental Quality Act compliance, and construction. The project's completion is currently estimated in December 2028, but is contingent upon the successful acquisition of grant funding.

OPERATING BUDGET IMPACT
While the existing site will need to be maintained, the improvements are not anticipated to add significantly to routine maintenance costs. Additional refuse costs are anticipated for trash pickup and will be absorbed in the existing operating budget.

PROJECT FUNDING OVERVIEW

Total Project Cost	Prior Years Funding	Five-Year Plan	Remaining Needed
$ 1,500,000	$ 44,000	$ -	$ 1,456,000

TWO-YEAR BUDGET AND FIVE-YEAR PLAN

Funding Source	FY 2026/27	FY 2027/28	FY 2028/29	FY 2029/30	FY 2030/31	Total
N/A	$ -	$ -	$ -	$ -	$ -	$ -
Total Funding	**$ -**	**$ -**	**$ -**	**$ -**	**$ -**	**$ -**

This Page Intentionally Left Blank

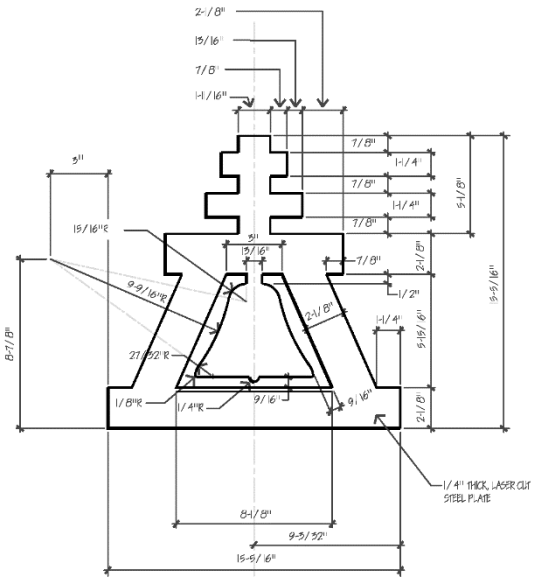



PUBLIC PARKING

CITY OF RIVERSIDE

PROJECT LOCATION MAP

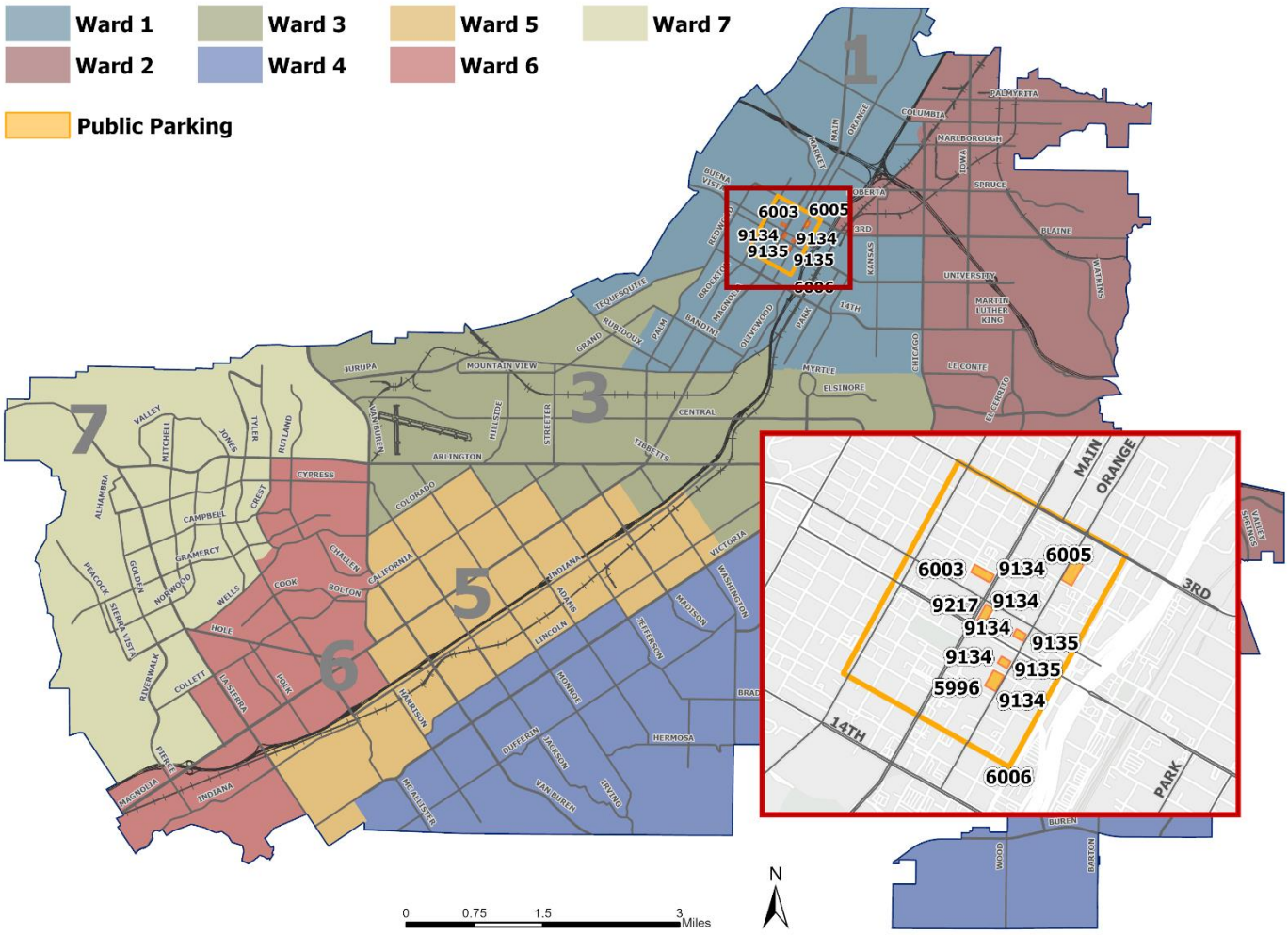

Note: This map includes all active and new capital projects. Ongoing and citywide projects are not included on the map. To view additional information and detailed maps, please visit the City's Budget Transparency Portal at https://Riverside.OpenBook.Questica.com.



This Page Intentionally Left Blank

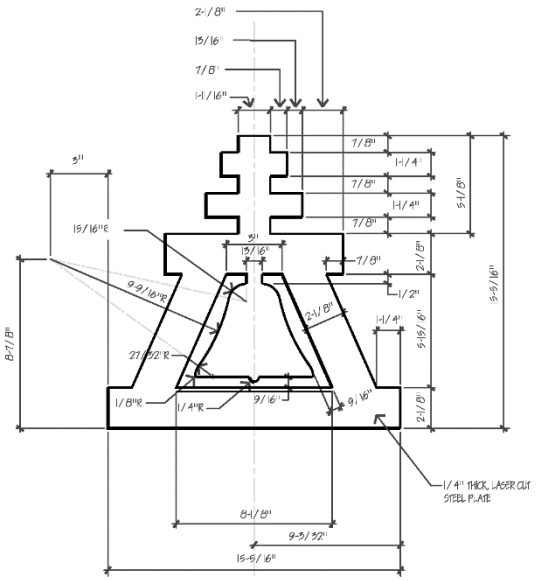

DOWNTOWN PARKING GARAGE #8

PRIORITIZATION CATEGORIES

- ☐ Risk to Health, Safety and Environment
- ☐ Regulatory or Mandated Requirements
- ☐ Asset Condition, Annual Recurring Costs, and Asset Longevity
- ☒ Community Investment and Economic Prosperity
- ☒ Level and Quality of Service
- ☐ Sustainability and Conservation
- ☐ Funding Availability
- ☐ Project Readiness
- ☒ Multiple Category Benefit and Bundling Opportunities

NEW OR EXISTING

- ☒ New Infrastructure or Facility
- ☐ Existing Infrastructure or Facility



PROJECT NUMBER 6005 **COUNCIL WARD** 1
PROJECT CATEGORY Public Parking
PROJECT LOCATION 3460 Orange Street

PROJECT DESCRIPTION
This project is for the construction of Parking Garage 8. The facility is envisioned to have up to 1,100 stalls and will be located at the northeast corner of Orange Street and 5th Street, which currently is the site of Parking Lot 52. The garage will align with the City's objectives for Downtown growth along with the City's sustainability objectives.

PROJECT STATUS
The project is in design phase and will move forward to the next phase once sufficient funding is identified and secured. Currently construction isn't expected to begin until Summer 2027 with completion by Summer 2029.

OPERATING BUDGET IMPACT
The operating budget will be increased to address the ongoing maintenance of equipment, facility, and staffing. The additional costs will be quantified nearer to completion and incorporated into the operating budget of the Parking Fund.

PROJECT FUNDING OVERVIEW

Total Project Cost	Prior Years Funding	Five-Year Plan	Remaining Needed
$ 40,000,000	$ 100,000	$ -	$ 39,900,000

TWO-YEAR BUDGET AND FIVE-YEAR PLAN

Funding Source	FY 2026/27	FY 2027/28	FY 2028/29	FY 2029/30	FY 2030/31	Total
N/A	$ -	$ -	$ -	$ -	$ -	$ -
Total Funding	**$ -**	**$ -**	**$ -**	**$ -**	**$ -**	**$ -**

ON-STREET SPACE MONITORING SYSTEM

PRIORITIZATION CATEGORIES

- ☐ Risk to Health, Safety and Environment
- ☐ Regulatory or Mandated Requirements
- ☐ Asset Condition, Annual Recurring Costs, and Asset Longevity
- ☒ Community Investment and Economic Prosperity
- ☒ Level and Quality of Service
- ☐ Sustainability and Conservation
- ☐ Funding Availability
- ☐ Project Readiness
- ☒ Multiple Category Benefit and Bundling Opportunities

NEW OR EXISTING

- ☐ New Infrastructure or Facility
- ☒ Existing Infrastructure or Facility



PROJECT NUMBER 6001
PROJECT CATEGORY Public Parking
PROJECT LOCATION Various
COUNCIL WARD 1

PROJECT DESCRIPTION
This project includes the purchase and installation of on-street space monitoring sensors to enhance the downtown parking experience. It will provide real-time wayfinding through digital signs and a mobile app displaying available on-street parking spaces. The system will help residents, visitors, and businesses quickly locate available parking, reducing congestion and frustration. By delivering accurate, up-to-date parking availability information, this project will improve the downtown experience, optimize traffic flow, and support local businesses.

PROJECT STATUS
The project has already been approved through a Sourcewell contract. Installation is set to begin in Fall 2026 with completion expected by Summer 2027.

OPERATING BUDGET IMPACT
The space monitoring system will eventually cover 2,500 on-street and off-street parking lot spaces. Operational costs associated with software support and maintenance are $80 annually per device. Once all the 2,500 spaces are installed and monitored the annual operating expenses will be $200,000.

PROJECT FUNDING OVERVIEW

Total Project Cost	Prior Years Funding	Five-Year Plan	Remaining Needed
$ 900,000	$ 450,000	$ 200,000	$ 250,000

TWO-YEAR BUDGET AND FIVE-YEAR PLAN

Funding Source	FY 2026/27	FY 2027/28	FY 2028/29	FY 2029/30	FY 2030/31	Total
570 - Public Parking Fund	$ 200,000	$ -	$ -	$ -	$ -	$ 200,000
Total Funding	**$ 200,000**	**$ -**	**$ -**	**$ -**	**$ -**	**$ 200,000**

PARKING GARAGE – GUIDANCE, LIGHTING, CAMERA SYSTEM

PRIORITIZATION CATEGORIES

- ☒ Risk to Health, Safety and Environment
- ☐ Regulatory or Mandated Requirements
- ☒ Asset Condition, Annual Recurring Costs, and Asset Longevity
- ☒ Community Investment and Economic Prosperity
- ☒ Level and Quality of Service
- ☒ Sustainability and Conservation
- ☐ Funding Availability
- ☐ Project Readiness
- ☒ Multiple Category Benefit and Bundling Opportunities

NEW OR EXISTING

- ☐ New Infrastructure or Facility
- ☒ Existing Infrastructure or Facility



PROJECT NUMBER 9134 **COUNCIL WARD** 1
PROJECT CATEGORY Public Parking
PROJECT LOCATION 3743, 3851, & 3901 Orange Street; 3732 & 3601 Market Street

PROJECT DESCRIPTION
This project provides for the purchase and installation of a comprehensive technology upgrade across five downtown facilities: Parking Garages 1, 2, 3, 6, and 7. The project includes a new parking guidance and wayfinding system to direct drivers to available spaces, upgraded energy-efficient LED lighting to improve visibility, and a modern security camera system to enhance public safety. The integrated system will improve the customer experience by reducing search times and congestion, while the improved lighting and camera surveillance will deter criminal activity and increase safety for all patrons.

PROJECT STATUS
This project is going to start off with a pilot program. Lighting upgrades are ongoing as needed and the guidance system design will begin after the pilot program is evaluated in Garage 6. Overall project completion is estimated for Summer 2029.

OPERATING BUDGET IMPACT
The project is not anticipated to have an impact on the operating budget. This infrastructure improvement should increase efficiencies, thus not requiring additional budgetary support.

PROJECT FUNDING OVERVIEW

Total Project Cost	Prior Years Funding	Five-Year Plan	Remaining Needed
$ 1,673,334	$ 500,166	$ 833,334	$ 339,834

TWO-YEAR BUDGET AND FIVE-YEAR PLAN

Funding Source	FY 2026/27	FY 2027/28	FY 2028/29	FY 2029/30	FY 2030/31	Total
570 - Public Parking Fund	$ 833,334	$ -	$ -	$ -	$ -	$ 833,334
Total Funding	**$ 833,334**	**$ -**	**$ -**	**$ -**	**$ -**	**$ 833,334**

PARKING GARAGE #1 & #2 - STRUCTURAL MAINTENANCE

PRIORITIZATION CATEGORIES

- ☒ Risk to Health, Safety and Environment
- ☒ Regulatory or Mandated Requirements
- ☒ Asset Condition, Annual Recurring Costs, and Asset Longevity
- ☒ Community Investment and Economic Prosperity
- ☒ Level and Quality of Service
- ☐ Sustainability and Conservation
- ☐ Funding Availability
- ☐ Project Readiness
- ☒ Multiple Category Benefit and Bundling Opportunities

NEW OR EXISTING

- ☐ New Infrastructure or Facility
- ☒ Existing Infrastructure or Facility



PROJECT NUMBER 9135 **COUNCIL WARD** 1
PROJECT CATEGORY Public Parking
PROJECT LOCATION 3743 & 3851 Orange Street

PROJECT DESCRIPTION
This project entails comprehensive structural maintenance for Garages 1 and 2 aiming to address long-standing deferred maintenance issues. By implementing the necessary repairs and upgrades across these key structures, will enhance safety, extend the lifespan of the garages, and ensure a reliable infrastructure for the community.

PROJECT STATUS
This project is in the Planning phase. Staff is preparing a Request for Proposal for structural engineering services. Construction is anticipated to begin in Summer 2026, with project completion to be determined once the vendor is selected.

OPERATING BUDGET IMPACT
This project is a rehabilitation of existing facilities and will not require additional operation and maintenance costs. By addressing deferred maintenance, it may reduce future reactive repair expenses.

PROJECT FUNDING OVERVIEW

Total Project Cost	Prior Years Funding	Five-Year Plan	Remaining Needed
$ 1,200,000	$ 1,200,000	$ -	$ -

TWO-YEAR BUDGET AND FIVE-YEAR PLAN

Funding Source	FY 2026/27	FY 2027/28	FY 2028/29	FY 2029/30	FY 2030/31	Total
N/A	$ -	$ -	$ -	$ -	$ -	$ -
Total Funding	**$ -**	**$ -**	**$ -**	**$ -**	**$ -**	**$ -**

PARKING GARAGE #3 - STRUCTURAL MAINTENANCE

PRIORITIZATION CATEGORIES

- ☒ Risk to Health, Safety and Environment
- ☐ Regulatory or Mandated Requirements
- ☒ Asset Condition, Annual Recurring Costs, and Asset Longevity
- ☒ Community Investment and Economic Prosperity
- ☒ Level and Quality of Service
- ☐ Sustainability and Conservation
- ☐ Funding Availability
- ☐ Project Readiness
- ☒ Multiple Category Benefit and Bundling Opportunities

NEW OR EXISTING

- ☐ New Infrastructure or Facility
- ☒ Existing Infrastructure or Facility

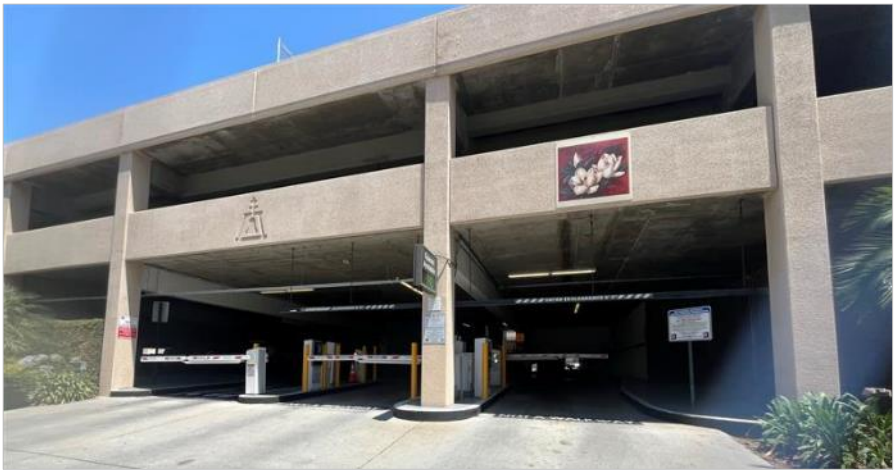

PROJECT NUMBER 9217 **COUNCIL WARD** 1
PROJECT CATEGORY Public Parking
PROJECT LOCATION 3732 Market Street

PROJECT DESCRIPTION
This project provides for comprehensive structural maintenance and repairs at Parking Garage 3, located at 3732 Market Street. The scope of work is based on a structural assessment and will address deferred maintenance items. These necessary repairs will correct structural deficiencies, ensure the garage's integrity, and enhance public safety for all users.

PROJECT STATUS
Staff is currently preparing a structural engineering Request for Proposal. Construction is anticipated to begin in Summer 2026, with an estimated completion in Summer 2027.

OPERATING BUDGET IMPACT
This project is a rehabilitation of existing facilities and will not require additional operation and maintenance costs. Addressing deferred maintenance now avoids higher emergency repair costs in the future.

PROJECT FUNDING OVERVIEW

Total Project Cost	Prior Years Funding	Five-Year Plan	Remaining Needed
$ 300,000	$ 144,960	$ -	$ 155,040

TWO-YEAR BUDGET AND FIVE-YEAR PLAN

Funding Source	FY 2026/27	FY 2027/28	FY 2028/29	FY 2029/30	FY 2030/31	Total
N/A	$ -	$ -	$ -	$ -	$ -	$ -
Total Funding	**$ -**	**$ -**	**$ -**	**$ -**	**$ -**	**$ -**

PARKING GARAGE #7 - STRUCTURAL MAINTENANCE

PRIORITIZATION CATEGORIES

- ☒ Risk to Health, Safety and Environment
- ☐ Regulatory or Mandated Requirements
- ☒ Asset Condition, Annual Recurring Costs, and Asset Longevity
- ☐ Community Investment and Economic Prosperity
- ☒ Level and Quality of Service
- ☐ Sustainability and Conservation
- ☐ Funding Availability
- ☐ Project Readiness
- ☒ Multiple Category Benefit and Bundling Opportunities

NEW OR EXISTING

- ☐ New Infrastructure or Facility
- ☒ Existing Infrastructure or Facility



PROJECT NUMBER 6003 **COUNCIL WARD** 1
PROJECT CATEGORY Public Parking
PROJECT LOCATION 3601 Market Street

PROJECT DESCRIPTION
This project funds comprehensive structural maintenance for Parking Garage #7, located at 3601 Market Street. The work is necessary to address deferred maintenance, ensure public safety, and maintain the facility's structural integrity.

PROJECT STATUS
Structural engineering will begin in Summer 2026, but structural repairs will not begin until Summer 2027 and the project will conclude in Summer 2028.

OPERATING BUDGET IMPACT
As these are repairs to existing infrastructure, they will not require additional operational or maintenance costs.

PROJECT FUNDING OVERVIEW

Total Project Cost	Prior Years Funding	Five-Year Plan	Remaining Needed
$ 525,000	$ 25,000	$ 500,000	$ -

TWO-YEAR BUDGET AND FIVE-YEAR PLAN

Funding Source	FY 2026/27	FY 2027/28	FY 2028/29	FY 2029/30	FY 2030/31	Total
570 - Public Parking Fund	$ -	$ 500,000	$ -	$ -	$ -	$ 500,000
Total Funding	**$ -**	**$ 500,000**	**$ -**	**$ -**	**$ -**	**$ 500,000**

REPAVING & RESTRIPING PARKING LOTS

PRIORITIZATION CATEGORIES

- ☐ Risk to Health, Safety and Environment
- ☐ Regulatory or Mandated Requirements
- ☐ Asset Condition, Annual Recurring Costs, and Asset Longevity
- ☒ Community Investment and Economic Prosperity
- ☒ Level and Quality of Service
- ☐ Sustainability and Conservation
- ☐ Funding Availability
- ☐ Project Readiness
- ☒ Multiple Category Benefit and Bundling Opportunities

NEW OR EXISTING

- ☐ New Infrastructure or Facility
- ☒ Existing Infrastructure or Facility



PROJECT NUMBER 5999
PROJECT CATEGORY Public Parking
PROJECT LOCATION Various
COUNCIL WARD 1

PROJECT DESCRIPTION
This project involves repaving and restriping the public parking lots in downtown to address normal wear and tear. The project will contribute to the overall beautification and appeal of downtown Riverside, making it a more inviting destination for visitors and residents alike.

PROJECT STATUS
Construction will begin in Spring 2026, and the project is expected to be completed by Summer 2026.

OPERATING BUDGET IMPACT
While the initial investment will cover resurfacing and restriping activities, routine resurfacing costs of approximately $50,000 a year will be required.

PROJECT FUNDING OVERVIEW

Total Project Cost	Prior Years Funding	Five-Year Plan	Remaining Needed
$ 730,502	$ 730,502	$ -	$ -

TWO-YEAR BUDGET AND FIVE-YEAR PLAN

Funding Source	FY 2026/27	FY 2027/28	FY 2028/29	FY 2029/30	FY 2030/31	Total
N/A	$ -	$ -	$ -	$ -	$ -	$ -
Total Funding	**$ -**	**$ -**	**$ -**	**$ -**	**$ -**	**$ -**

REPLACE IPS PAY STATIONS

PRIORITIZATION CATEGORIES

- ☐ Risk to Health, Safety and Environment
- ☐ Regulatory or Mandated Requirements
- ☐ Asset Condition, Annual Recurring Costs, and Asset Longevity
- ☒ Community Investment and Economic Prosperity
- ☒ Level and Quality of Service
- ☐ Sustainability and Conservation
- ☐ Funding Availability
- ☐ Project Readiness
- ☐ Multiple Category Benefit and Bundling Opportunities

NEW OR EXISTING

- ☐ New Infrastructure or Facility
- ☒ Existing Infrastructure or Facility



PROJECT NUMBER 6006
PROJECT CATEGORY Public Parking
PROJECT LOCATION Ward 1
COUNCIL WARD 1

PROJECT DESCRIPTION
The City will replace the existing IPS pay stations in downtown Riverside. The current pay stations are outdated, labor-intensive to maintain, and are no longer supported by the manufacturer. The pay stations also require ongoing staff resources for maintenance as well as cash and coin collection. While the pay stations provide an option for community members who prefer to pay with cash, coins, or credit cards rather than using a mobile application, industry trends indicate that cash and coin usage is declining rapidly, while credit cards, mobile wallets, and app-based payment platforms continue to increase.
Replacing the current system will allow the City to modernize its parking payment infrastructure and implement technology that aligns with current industry practices.

PROJECT STATUS
The project RFP will be published Winter 2027, awarded by Summer 2028, and installation completed by Winter 2028.

OPERATING BUDGET IMPACT
Upon completion, the support, maintenance, and operational fees for the new IPS pay stations are currently estimated at $10,000 annually and are included in the Parking operating budget. The full scope of operational impacts will be known upon the finalization of the bidding process.

PROJECT FUNDING OVERVIEW

Total Project Cost	Prior Years Funding	Five-Year Plan	Remaining Needed
$ 1,800,000	$ -	$ 1,800,000	$ -

TWO-YEAR BUDGET AND FIVE-YEAR PLAN

Funding Source	FY 2026/27	FY 2027/28	FY 2028/29	FY 2029/30	FY 2030/31	Total
570 - Public Parking Fund	$ -	$ 1,800,000	$ -	$ -	$ -	$ 1,800,000
Total Funding	**$ -**	**$ 1,800,000**	**$ -**	**$ -**	**$ -**	**$ 1,800,000**

UNINTERRUPTED POWER SUPPLY BACKUP SYSTEM

PRIORITIZATION CATEGORIES

- ☒ Risk to Health, Safety and Environment
- ☐ Regulatory or Mandated Requirements
- ☐ Asset Condition, Annual Recurring Costs, and Asset Longevity
- ☒ Community Investment and Economic Prosperity
- ☒ Level and Quality of Service
- ☐ Sustainability and Conservation
- ☐ Funding Availability
- ☐ Project Readiness
- ☒ Multiple Category Benefit and Bundling Opportunities

NEW OR EXISTING

- ☐ New Infrastructure or Facility
- ☒ Existing Infrastructure or Facility

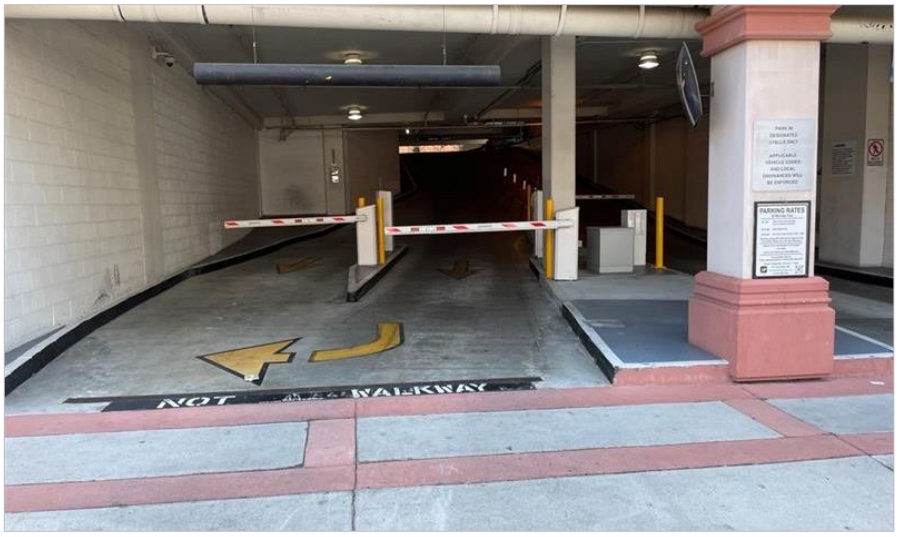

PROJECT NUMBER 5996 **COUNCIL WARD** 1
PROJECT CATEGORY Public Parking
PROJECT LOCATION 3901 Orange Street

PROJECT DESCRIPTION
This project will replace the Uninterrupted Power Supply (UPS) backup system at Garage 6 to ensure continued operation of critical emergency lighting during power outages. The new UPS system will provide reliable backup power for essential lighting, including exit signs and emergency lights, enhancing safety and ensuring visibility during emergencies. This upgrade will improve system dependability and support compliance with emergency lighting requirements.

PROJECT STATUS
The project will commence in Spring 2027 and anticipated to complete by Summer 2027.

OPERATING BUDGET IMPACT
The annual maintenance expense will be built into the existing operations budget and will not additionally impact the operating budget.

PROJECT FUNDING OVERVIEW

Total Project Cost	Prior Years Funding	Five-Year Plan	Remaining Needed
$ 250,000	$ 100,000	$ 150,000	$ -

TWO-YEAR BUDGET AND FIVE-YEAR PLAN

Funding Source	FY 2026/27	FY 2027/28	FY 2028/29	FY 2029/30	FY 2030/31	Total
570 - Public Parking Fund	$ 150,000	$ -	$ -	$ -	$ -	$ 150,000
Total Funding	**$ 150,000**	**$ -**	**$ -**	**$ -**	**$ -**	**$ 150,000**

This Page Intentionally Left Blank

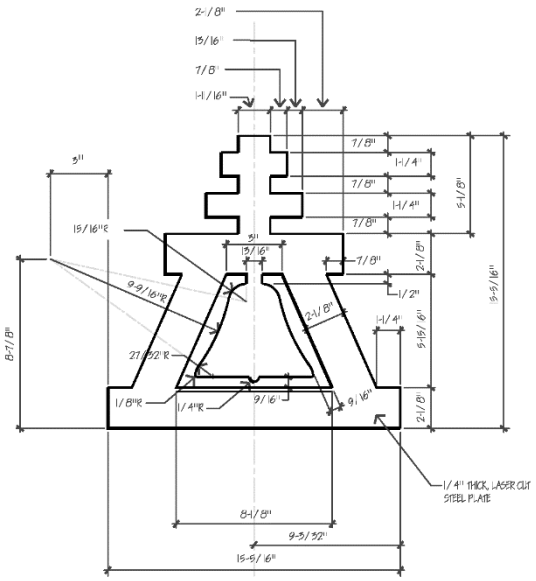



RAILROAD RELATED

CITY OF RIVERSIDE

PROJECT LOCATION MAP

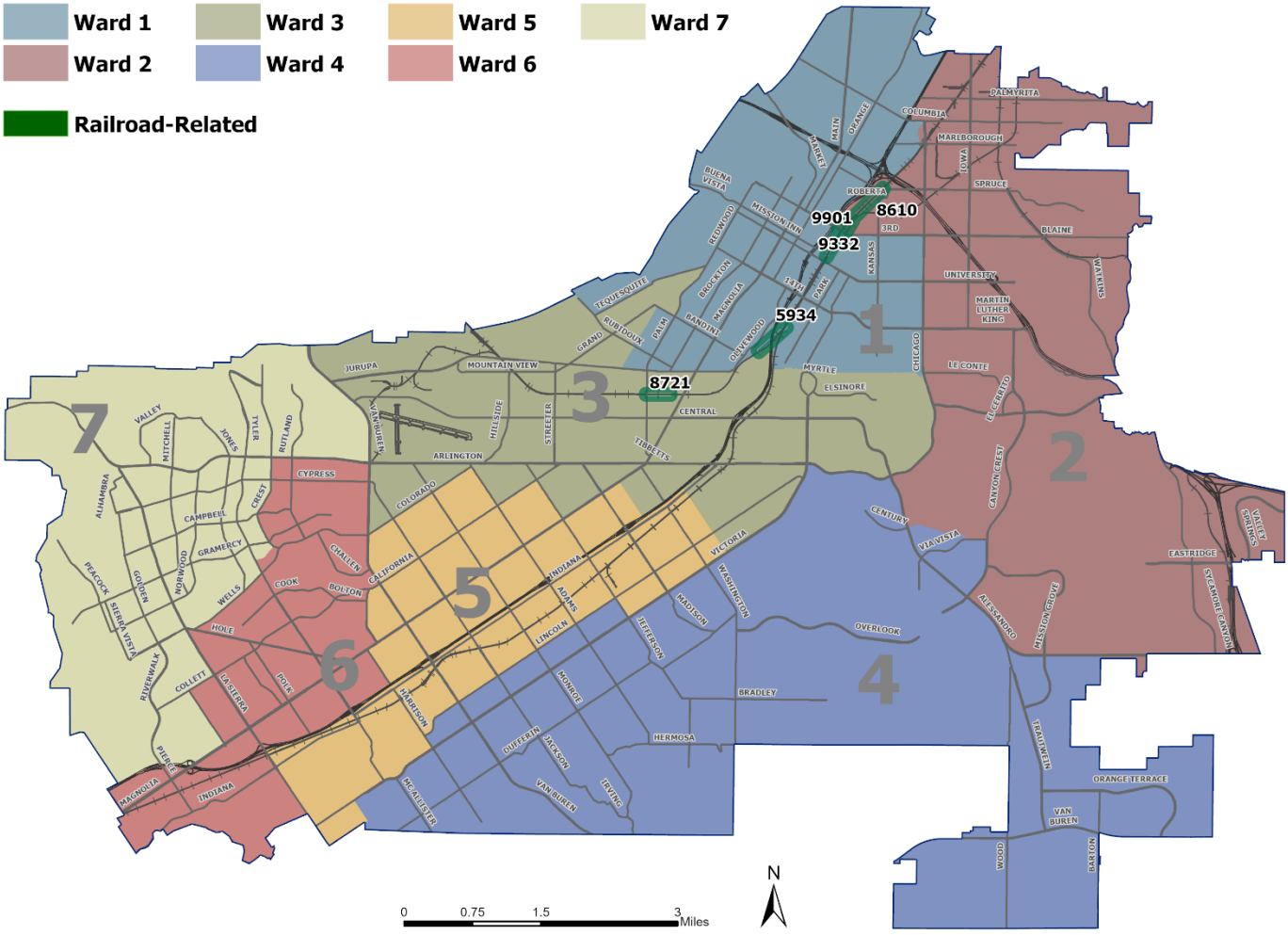

Note: This map includes all active and new capital projects. Ongoing and citywide projects are not included on the map. To view additional information and detailed maps, please visit the City's Budget Transparency Portal at https://Riverside.OpenBook.Questica.com.



This Page Intentionally Left Blank

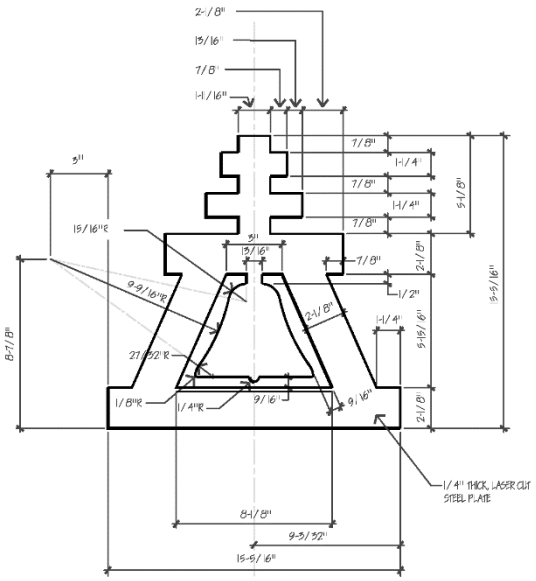

BNSF QUIET ZONE - MISSION INN TO MARLBOROUGH AVE

PRIORITIZATION CATEGORIES

- ☒ Risk to Health, Safety and Environment
- ☐ Regulatory or Mandated Requirements
- ☐ Asset Condition, Annual Recurring Costs, and Asset Longevity
- ☐ Community Investment and Economic Prosperity
- ☒ Level and Quality of Service
- ☐ Sustainability and Conservation
- ☐ Funding Availability
- ☐ Project Readiness
- ☒ Multiple Category Benefit and Bundling Opportunities

NEW OR EXISTING

- ☒ New Infrastructure or Facility
- ☒ Existing Infrastructure or Facility



PROJECT NUMBER 8610 **COUNCIL WARD** 1, 2
PROJECT CATEGORY Railroad-Related
PROJECT LOCATION BNSF Highway-Rail Crossing Mission Inn to Marlborough

PROJECT DESCRIPTION
This project will eliminate the routine sounding of train horns along the Burlington Northern Santa Fe (BNSF) Railway corridor between Mission Inn Avenue and Marlborough Ave by establishing a Quiet Zone in accordance with the Federal Railroad Administration's (FRA) Final Rule. The project provides for the construction of additional safety improvements consisting of a new concrete curb, gutter, and sidewalk, tactile strips, directional fencing, warning signs, and grade crossing warning devices at four highway-rail/grade crossings.

PROJECT STATUS
The project is in the preliminary engineering phase. Construction is expected to be completed in Winter 2027.

OPERATING BUDGET IMPACT
Upon completion, this project will have an annual maintenance cost of approximately $50,000 per year that will be paid to BNSF for maintenance costs.

PROJECT FUNDING OVERVIEW

Total Project Cost	Prior Years Funding	Five-Year Plan	Remaining Needed
$ 4,163,000	$ 663,000	$ 675,100	$ 2,824,900

TWO-YEAR BUDGET AND FIVE-YEAR PLAN

Funding Source	FY 2026/27	FY 2027/28	FY 2028/29	FY 2029/30	FY 2030/31	Total
432 - Measure A	$ 327,300	$ 347,800	$ -	$ -	$ -	$ 675,100
Total Funding	**$ 327,300**	**$ 347,800**	**$ -**	**$ -**	**$ -**	**$ 675,100**

BNSF/THIRD STREET GRADE SEPARATION

PRIORITIZATION CATEGORIES

- ☒ Risk to Health, Safety and Environment
- ☐ Regulatory or Mandated Requirements
- ☐ Asset Condition, Annual Recurring Costs, and Asset Longevity
- ☐ Community Investment and Economic Prosperity
- ☒ Level and Quality of Service
- ☐ Sustainability and Conservation
- ☐ Funding Availability
- ☐ Project Readiness
- ☒ Multiple Category Benefit and Bundling Opportunities

NEW OR EXISTING

- ☐ New Infrastructure or Facility
- ☒ Existing Infrastructure or Facility



PROJECT NUMBER 9901 **COUNCIL WARD** 1, 2
PROJECT CATEGORY Railroad-Related
PROJECT LOCATION Third Street at the BNSF crossing between Lime Street & Park Avenue

PROJECT DESCRIPTION
This location is along the Burlington Northern Santa Fe Railroad (BNSF) and the project will reduce traffic congestion by eliminating the at-grade street intersection with the existing railroad lines. The construction of a grade separation will allow for an uninterrupted flow of vehicular traffic either above or below the railroad lines. Work includes the construction of an underpass for Third Street and the BNSF railroad tracks, construction of temporary shoofly tracks, grading, retaining walls, and a multi-track concrete bridge structure to provide a four-lane roadway beneath the tracks.

PROJECT STATUS
The project is in the Right-of-Way phase. Construction is anticipated to start Summer 2026 and completed Winter 2028.

OPERATING BUDGET IMPACT
There are no operating budget impacts anticipated once this project is complete.

PROJECT FUNDING OVERVIEW

Total Project Cost	Prior Years Funding	Five-Year Plan	Remaining Needed
$ 105,000,000	$ 71,061,207	$ 1,000,000	$ 32,938,793

TWO-YEAR BUDGET AND FIVE-YEAR PLAN

Funding Source	FY 2026/27	FY 2027/28	FY 2028/29	FY 2029/30	FY 2030/31	Total
432 - Measure A	$ 500,000	$ 500,000	$ -	$ -	$ -	$ 1,000,000
Total Funding	**$ 500,000**	**$ 500,000**	**$ -**	**$ -**	**$ -**	**$ 1,000,000**

BNSF/UP QUIET ZONE - PANORAMA & CRIDGE

PRIORITIZATION CATEGORIES

- ☒ Risk to Health, Safety and Environment
- ☐ Regulatory or Mandated Requirements
- ☐ Asset Condition, Annual Recurring Costs, and Asset Longevity
- ☐ Community Investment and Economic Prosperity
- ☒ Level and Quality of Service
- ☐ Sustainability and Conservation
- ☒ Funding Availability
- ☒ Project Readiness
- ☒ Multiple Category Benefit and Bundling Opportunities

NEW OR EXISTING

- ☒ New Infrastructure or Facility
- ☒ Existing Infrastructure or Facility



PROJECT NUMBER 5934 **COUNCIL WARD** 1,3
PROJECT CATEGORY Railroad-Related
PROJECT LOCATION Panorama Road and Cridge Street Highway-Rail crossings

PROJECT DESCRIPTION

This project will eliminate the routine sounding of train horns by establishing Quiet Zones in accordance with the Federal Railroad Administration's (FRA) Final Rule. The Quiet Zones will be along the Union Pacific (UP) Railroad corridor at Panorama Road and the Burlington Northern Santa Fe (BNSF) Railway corridor at Cridge Street. The project provides for the construction of additional safety improvements consisting of a new concrete curb, gutter and sidewalk, tactile strips, directional fencing, warning signs, and grade crossing warning devices at the Panorama Road and Cridge Street highway-rail grade crossings.

PROJECT STATUS

The Quiet Zone Panorama project was completed November 2024. The Cridge Street phase is complete and in administrative close out phase and anticipated to be completed Summer 2026.

OPERATING BUDGET IMPACT

Upon project completion, there will be an annual maintenance cost of approximately $50,000 per year per crossing required for UP and BNSF to maintain the crossings.

PROJECT FUNDING OVERVIEW

Total Project Cost	Prior Years Funding	Five-Year Plan	Remaining Needed
$ 9,238,733	$ 9,238,733	$ -	$ -

TWO-YEAR BUDGET AND FIVE-YEAR PLAN

Funding Source	FY 2026/27	FY 2027/28	FY 2028/29	FY 2029/30	FY 2030/31	Total
N/A	$ -	$ -	$ -	$ -	$ -	$ -
Total Funding	**$ -**	**$ -**	**$ -**	**$ -**	**$ -**	**$ -**

THIRD STREET BUILDING DEMO

PRIORITIZATION CATEGORIES

- ☒ Risk to Health, Safety and Environment
- ☐ Regulatory or Mandated Requirements
- ☐ Asset Condition, Annual Recurring Costs, and Asset Longevity
- ☒ Community Investment and Economic Prosperity
- ☒ Level and Quality of Service
- ☐ Sustainability and Conservation
- ☐ Funding Availability
- ☒ Project Readiness
- ☒ Multiple Category Benefit and Bundling Opportunities

NEW OR EXISTING

- ☐ New Infrastructure or Facility
- ☒ Existing Infrastructure or Facility



PROJECT NUMBER 9332 **COUNCIL WARD** 2
PROJECT CATEGORY Railroad-Related
PROJECT LOCATION 2665 & 2675 Third Street

PROJECT DESCRIPTION
This is a city-acquired property that is required to be demolished due to a homeless encampment in the building to satisfy public safety requirements. This project will perform a comprehensive site preparation, including environmental abatement and the demolition of an existing structure near the BNSF railroad line. The project further entails site grading, dust mitigation, and the installation of a new chain-link perimeter fence.

PROJECT STATUS
The project is underway with completion of the project currently anticipated for Winter 2028.

OPERATING BUDGET IMPACT
There are no operating budget impacts anticipated once this project is complete.

PROJECT FUNDING OVERVIEW			
Total Project Cost	Prior Years Funding	Five-Year Plan	Remaining Needed
$ 490,000	$ 490,000	$ -	$ -

TWO-YEAR BUDGET AND FIVE-YEAR PLAN						
Funding Source	FY 2026/27	FY 2027/28	FY 2028/29	FY 2029/30	FY 2030/31	Total
N/A	$ -	$ -	$ -	$ -	$ -	$ -
Total Funding	**$ -**	**$ -**	**$ -**	**$ -**	**$ -**	**$ -**

UP QUIET ZONE - BROCKTON & PALM

PRIORITIZATION CATEGORIES

- ☒ Risk to Health, Safety and Environment
- ☐ Regulatory or Mandated Requirements
- ☐ Asset Condition, Annual Recurring Costs, and Asset Longevity
- ☐ Community Investment and Economic Prosperity
- ☒ Level and Quality of Service
- ☐ Sustainability and Conservation
- ☐ Funding Availability
- ☐ Project Readiness
- ☒ Multiple Category Benefit and Bundling Opportunities

NEW OR EXISTING

- ☒ New Infrastructure or Facility
- ☒ Existing Infrastructure or Facility



PROJECT NUMBER 8721 **COUNCIL WARD** 3
PROJECT CATEGORY Railroad-Related
PROJECT LOCATION Brockton Avenue & Palm Avenue Highway-Rail grade crossings

PROJECT DESCRIPTION
This project will eliminate the routine sounding of train horns along the Union Pacific (UP) Railroad corridor at Brockton Avenue and Palm Avenue by establishing a Quiet Zone in accordance with the Federal Railroad Administration's (FRA) Final Rule. The project provides for the construction of additional safety improvements consisting of a new concrete curb, gutter, and sidewalk, raised center medians, tactile strips, warning signs, and grade crossing warning devices at Brockton Avenue and Palm Avenue highway-rail grade crossings.

PROJECT STATUS
The project is underway with an estimated completion date of Winter 2026.

OPERATING BUDGET IMPACT
Upon completion, this project will have an annual maintenance cost of approximately $50,000 per year that will be paid to UP for maintenance costs.

PROJECT FUNDING OVERVIEW

Total Project Cost	Prior Years Funding	Five-Year Plan	Remaining Needed
$ 4,288,100	$ 4,288,100	$ -	$ -

TWO-YEAR BUDGET AND FIVE-YEAR PLAN

Funding Source	FY 2026/27	FY 2027/28	FY 2028/29	FY 2029/30	FY 2030/31	Total
N/A	$ -	$ -	$ -	$ -	$ -	$ -
Total Funding	**$ -**	**$ -**	**$ -**	**$ -**	**$ -**	**$ -**

This Page Intentionally Left Blank

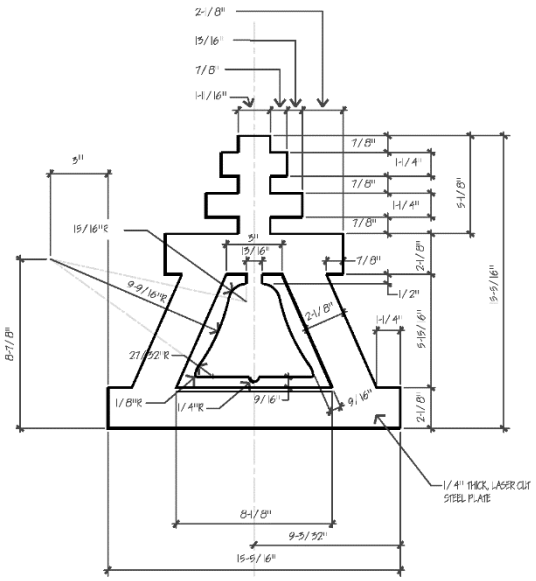



SEWER

CITY OF RIVERSIDE

PROJECT LOCATION MAP

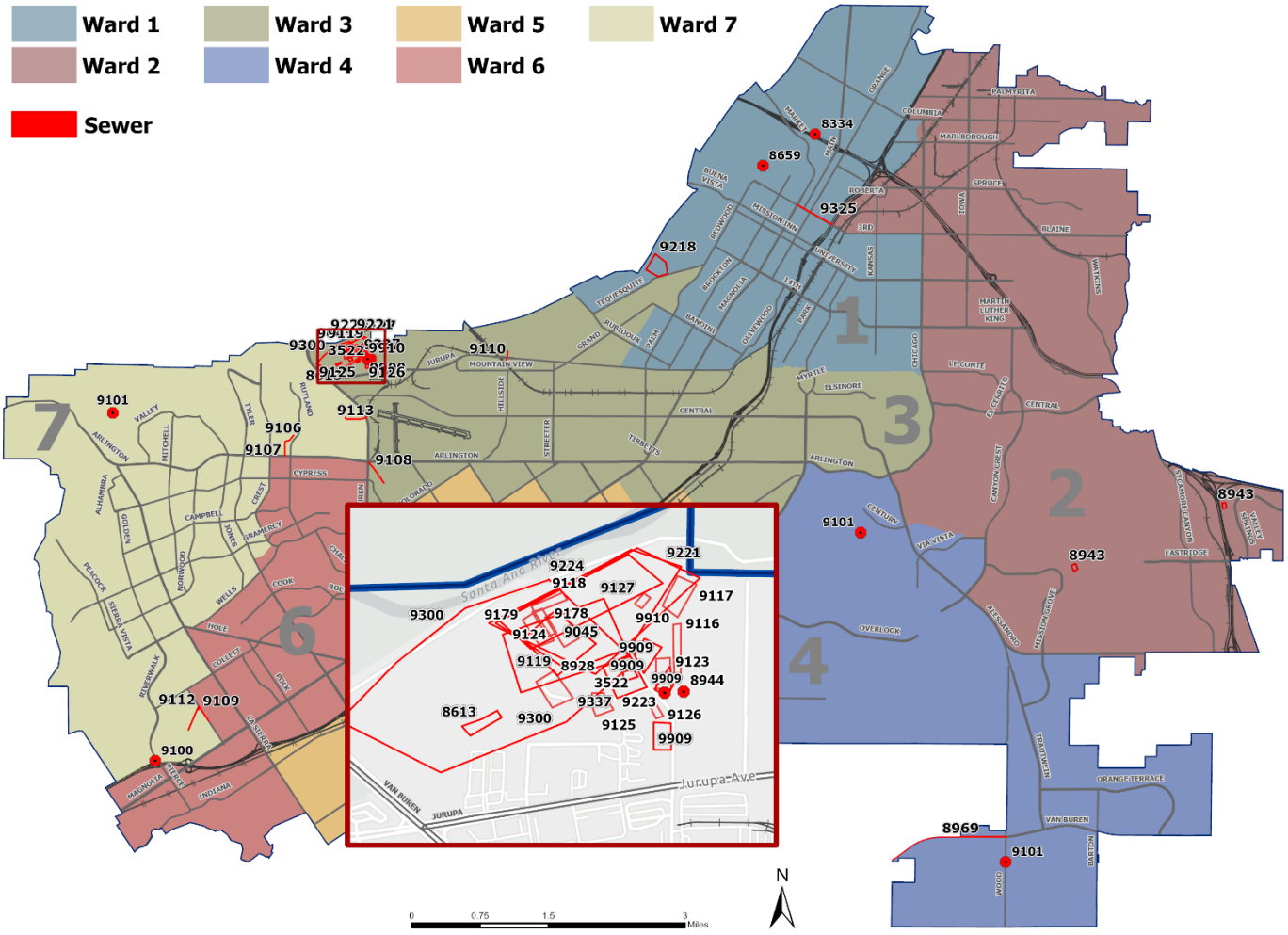

Note: This map includes all active and new capital projects. Ongoing and citywide projects are not included on the map. To view additional information and detailed maps, please visit the City's Budget Transparency Portal at https://Riverside.OpenBook.Questica.com.



This Page Intentionally Left Blank

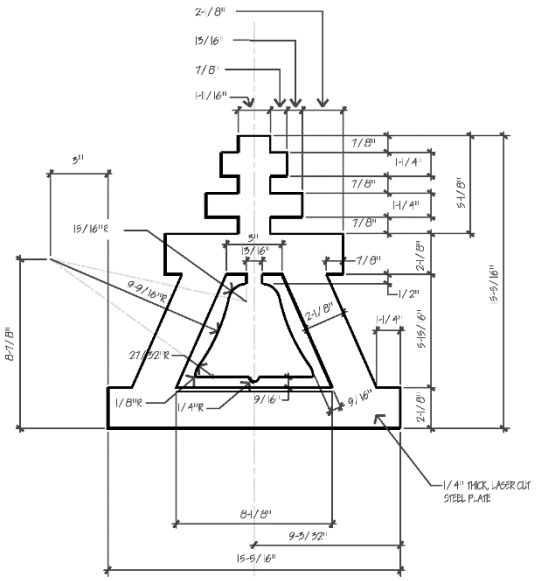

BIOSOLIDS HANDLING REHABILITATION

PRIORITIZATION CATEGORIES

- ☒ Risk to Health, Safety and Environment
- ☒ Regulatory or Mandated Requirements
- ☐ Asset Condition, Annual Recurring Costs, and Asset Longevity
- ☐ Community Investment and Economic Prosperity
- ☐ Level and Quality of Service
- ☐ Sustainability and Conservation
- ☐ Funding Availability
- ☐ Project Readiness
- ☒ Multiple Category Benefit and Bundling Opportunities

NEW OR EXISTING

- ☐ New Infrastructure or Facility
- ☒ Existing Infrastructure or Facility



PROJECT NUMBER 8928 **COUNCIL WARD** 3
PROJECT CATEGORY Sewer
PROJECT LOCATION 5950 Acorn Street

PROJECT DESCRIPTION
The Biosolids Handling Rehabilitation project is currently in the installation planning phase with the new centrifuge received and staff working on the scope of installation. Upcoming activities include advertising for bids to remove existing belt presses, replace electrical wiring, modify the centrifuge well and concrete footing, install polymer pumps, set up the new centrifuge, and replace one control panel. The new equipment is expected to have a service life of 10–15 years, providing a redundant backup system and increased sludge handling capacity.

PROJECT STATUS
This Project is under the scoping phase for the installation of the new centrifuge, control panels, polymer pumps, electrical installation, and removal of the existing belt press. Once the scope is ready, special provisions will be prepared, advertise for bids, then construction/installation. The project is estimated to be completed by the end of 2026.

OPERATING BUDGET IMPACT
This is a rehabilitation of existing infrastructure and will not require additional operational or maintenance costs.

PROJECT FUNDING OVERVIEW

Total Project Cost	Prior Years Funding	Five-Year Plan	Remaining Needed
$ 1,851,112	$ 1,851,112	$ -	$ -

TWO-YEAR BUDGET AND FIVE-YEAR PLAN

Funding Source	FY 2026/27	FY 2027/28	FY 2028/29	FY 2029/30	FY 2030/31	Total
N/A	$ -	$ -	$ -	$ -	$ -	$ -
Total Funding	**$ -**	**$ -**	**$ -**	**$ -**	**$ -**	**$ -**

DEXTER WASTEWATER

PRIORITIZATION CATEGORIES

- ☒ Risk to Health, Safety and Environment
- ☐ Regulatory or Mandated Requirements
- ☐ Asset Condition, Annual Recurring Costs, and Asset Longevity
- ☐ Community Investment and Economic Prosperity
- ☐ Level and Quality of Service
- ☐ Sustainability and Conservation
- ☐ Funding Availability
- ☐ Project Readiness
- ☐ Multiple Category Benefit and Bundling Opportunities

NEW OR EXISTING

- ☐ New Infrastructure or Facility
- ☒ Existing Infrastructure or Facility



PROJECT NUMBER 8659 **COUNCIL WARD** 1
PROJECT CATEGORY Sewer
PROJECT LOCATION 2981 Dexter Drive

PROJECT DESCRIPTION
This project proposes to replace and upgrade the Dexter sewer pump station located at 2981 Dexter Drive. The lift station serves approximately 45 single-residential homes located next to Lake Evans.

PROJECT STATUS
The project is currently in the design phase. Construction is expected to start in Fall 2026 with an anticipated completion date of Winter 2027.

OPERATING BUDGET IMPACT
This is a rehabilitation of existing infrastructure and will not require additional operational or maintenance costs.

PROJECT FUNDING OVERVIEW

Total Project Cost	Prior Years Funding	Five-Year Plan	Remaining Needed
$ 3.765,407	$ 1,265,407	$ 2,500,000	$ -

TWO-YEAR BUDGET AND FIVE-YEAR PLAN

Funding Source	FY 2026/27	FY 2027/28	FY 2028/29	FY 2029/30	FY 2030/31	Total
550 - Sewer Fund	$ -	$ 2,500,000	$ -	$ -	$ -	$ 2,500,000
Total Funding	**$ -**	**$ 2,500,000**	**$ -**	**$ -**	**$ -**	**$ 2,500,000**

FAIRGROUNDS WASTEWATER

PRIORITIZATION CATEGORIES

- ☒ Risk to Health, Safety and Environment
- ☐ Regulatory or Mandated Requirements
- ☐ Asset Condition, Annual Recurring Costs, and Asset Longevity
- ☐ Community Investment and Economic Prosperity
- ☐ Level and Quality of Service
- ☐ Sustainability and Conservation
- ☐ Funding Availability
- ☐ Project Readiness
- ☐ Multiple Category Benefit and Bundling Opportunities

NEW OR EXISTING

- ☒ New Infrastructure or Facility
- ☒ Existing Infrastructure or Facility



PROJECT NUMBER 8334 **COUNCIL WARD** 1
PROJECT CATEGORY Sewer
PROJECT LOCATION 3991 Fairgrounds Street

PROJECT DESCRIPTION
This sewer lift station serves the industrial and residential areas located at the northwest quadrant of the SR-60 and SR-215 interchange. This project proposes to replace and upgrade the Fairgrounds sewer lift station located at 3991 Fairgrounds Street.

PROJECT STATUS
The project is currently in the Design Phase with expected completion by the end of December 2026.

OPERATING BUDGET IMPACT
This is a rehabilitation of existing infrastructure and will not require additional operational or maintenance costs.

PROJECT FUNDING OVERVIEW

Total Project Cost	Prior Years Funding	Five-Year Plan	Remaining Needed
$ 4,476,251	$ 1,268,675	$ 3,207,576	$ -

TWO-YEAR BUDGET AND FIVE-YEAR PLAN

Funding Source	FY 2026/27	FY 2027/28	FY 2028/29	FY 2029/30	FY 2030/31	Total
550 - Sewer Fund	$ -	$ 3,207,576	$ -	$ -	$ -	$ 3,207,576
Total Funding	**$ -**	**$ 3,207,576**	**$ -**	**$ -**	**$ -**	**$ 3,207,576**

FEEDSTOCK RECEPTION STATION

PRIORITIZATION CATEGORIES

- ☐ Risk to Health, Safety and Environment
- ☐ Regulatory or Mandated Requirements
- ☐ Asset Condition, Annual Recurring Costs, and Asset Longevity
- ☒ Community Investment and Economic Prosperity
- ☐ Level and Quality of Service
- ☒ Sustainability and Conservation
- ☐ Funding Availability
- ☐ Project Readiness
- ☒ Multiple Category Benefit and Bundling Opportunities

NEW OR EXISTING

- ☐ New Infrastructure or Facility
- ☒ Existing Infrastructure or Facility

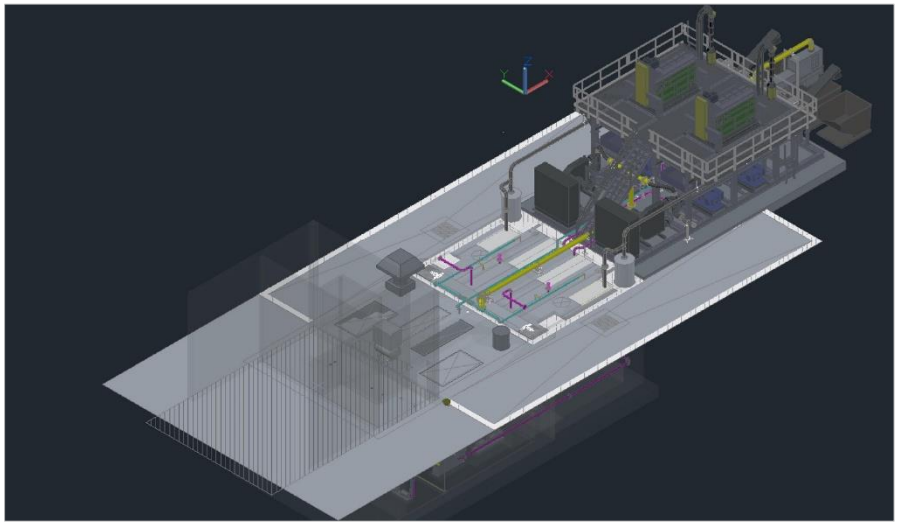

PROJECT NUMBER 3522 **COUNCIL WARD** All Wards
PROJECT CATEGORY Sewer
PROJECT LOCATION 5950 Acorn Street, Water Quality Control Plant

PROJECT DESCRIPTION
This project upgrades the feedstock reception station at the Regional Water Quality Control Plant (RWQCP) to accept food waste and organic feedstock. Improvements include equipment, electrical, instrumentation, piping, storage, and treatment upgrades. A proprietary Organics Polishing System (OPS) will remove contaminants and produce organic slurry for anaerobic digestion to generate Renewable Natural Gas (RNG). The RNG will be used to produce electricity at the RWQCP via Fuel cell and also get injected into SoCal Gas pipeline grid. This project enhances waste processing, reduces landfill waste, and supports the City's sustainability goals.

PROJECT STATUS
Construction and installation activities started December 2025. Expected completion is Summer 2026.

OPERATING BUDGET IMPACT
There is no anticipated impact to the City's operating budget. The operations and maintenance of the completed facility will be managed by a third-party partner, Anaergia Technologies, LLC, under a partnership agreement.

PROJECT FUNDING OVERVIEW

Total Project Cost	Prior Years Funding	Five-Year Plan	Remaining Needed
$ 10,000,000	$ 10,000,000	$ -	$ -

TWO-YEAR BUDGET AND FIVE-YEAR PLAN

Funding Source	FY 2026/27	FY 2027/28	FY 2028/29	FY 2029/30	FY 2030/31	Total
N/A	$ -	$ -	$ -	$ -	$ -	$ -
Total Funding	**$ -**	**$ -**	**$ -**	**$ -**	**$ -**	**$ -**

PIERCE PUMP STREET STATION REHABILITATION

PRIORITIZATION CATEGORIES

- ☒ Risk to Health, Safety and Environment
- ☒ Regulatory or Mandated Requirements
- ☐ Asset Condition, Annual Recurring Costs, and Asset Longevity
- ☒ Community Investment and Economic Prosperity
- ☒ Level and Quality of Service
- ☒ Sustainability and Conservation
- ☐ Funding Availability
- ☐ Project Readiness
- ☒ Multiple Category Benefit and Bundling Opportunities

NEW OR EXISTING

- ☐ New Infrastructure or Facility
- ☒ Existing Infrastructure or Facility



PROJECT NUMBER 9100 **COUNCIL WARD** 7
PROJECT CATEGORY Sewer
PROJECT LOCATION Pierce Street & 91 Freeway

PROJECT DESCRIPTION
The Pierce Pump Street Station Rehabilitation project at the Riverside Water Quality Control Plant involves the replacement of the sewer pump station, including pumps, motors, control systems, and six valves, to address equipment that has exceeded its useful service life. The existing station posed risks of sanitary sewer overflows and service disruptions. The new components are expected to have a service life of 20 years with proper maintenance, providing long-term reliability and improved operational safety for the plant.

PROJECT STATUS
The construction contract was awarded to fix 6 existing valves in Fall 2024. Additional rehabilitations are still needed and in planning stages with construction completion estimated in December 2028.

OPERATING BUDGET IMPACT
This is a rehabilitation of existing infrastructure and will not require additional operational or maintenance costs.

PROJECT FUNDING OVERVIEW

Total Project Cost	Prior Years Funding	Five-Year Plan	Remaining Needed
$ 9,695,163	$ 1,995,163	$ 7,700,000	$ -

TWO-YEAR BUDGET AND FIVE-YEAR PLAN

Funding Source	FY 2026/27	FY 2027/28	FY 2028/29	FY 2029/30	FY 2030/31	Total
550 - Sewer Fund	$ -	$ -	$ 1,300,000	$ 2,300,000	$ 4,100,000	$ 7,700,000
Total Funding	**$ -**	**$ -**	**$ 1,300,000**	**$ 2,300,000**	**$ 4,100,000**	**$ 7,700,000**

PRIORITY PIPELINE ASSESSMENT & REPAIR

PRIORITIZATION CATEGORIES

- ☒ Risk to Health, Safety and Environment
- ☒ Regulatory or Mandated Requirements
- ☒ Asset Condition, Annual Recurring Costs, and Asset Longevity
- ☒ Community Investment and Economic Prosperity
- ☒ Level and Quality of Service
- ☒ Sustainability and Conservation
- ☐ Funding Availability
- ☐ Project Readiness
- ☒ Multiple Category Benefit and Bundling Opportunities

NEW OR EXISTING

- ☐ New Infrastructure or Facility
- ☒ Existing Infrastructure or Facility



PROJECT NUMBER 9115
PROJECT CATEGORY Sewer
PROJECT LOCATION Citywide

COUNCIL WARD All Wards

PROJECT DESCRIPTION
This project concentrates on collecting videos and assessing the condition of sewer pipes that are older than 50 years within the City's service boundary. The project will also repair, rehabilitate, or replace aging sewer infrastructure - pipelines, manholes, and sewer residential laterals.

PROJECT STATUS
This project is ongoing. Management will evaluate the needs of the sewer system on an annual basis and prioritize their replacements and/or repairs.

OPERATING BUDGET IMPACT
This is a rehabilitation of existing infrastructure and will not require additional operational or maintenance costs.

PROJECT FUNDING OVERVIEW

Total Project Cost	Prior Years Funding	Five-Year Plan	Remaining Needed
Ongoing	$ 9,835,437	$ 2,000,000	Ongoing

TWO-YEAR BUDGET AND FIVE-YEAR PLAN

Funding Source	FY 2026/27	FY 2027/28	FY 2028/29	FY 2029/30	FY 2030/31	Total
550 - Sewer Fund	$ -	$ -	$ -	$ 2,000,000	$ -	$ 2,000,000
Total Funding	**$ -**	**$ -**	**$ -**	**$ 2,000,000**	**$ -**	**$ 2,000,000**

SEWER MAIN REPLACEMENT - KMART LOT

PRIORITIZATION CATEGORIES

- ☒ Risk to Health, Safety and Environment
- ☒ Regulatory or Mandated Requirements
- ☐ Asset Condition, Annual Recurring Costs, and Asset Longevity
- ☒ Community Investment and Economic Prosperity
- ☒ Level and Quality of Service
- ☒ Sustainability and Conservation
- ☐ Funding Availability
- ☐ Project Readiness
- ☒ Multiple Category Benefit and Bundling Opportunities

NEW OR EXISTING

- ☐ New Infrastructure or Facility
- ☒ Existing Infrastructure or Facility



PROJECT NUMBER 9108 **COUNCIL WARD** 3
PROJECT CATEGORY Sewer
PROJECT LOCATION Monticello Avenue; from Pembroke Avenue to Arlington Avenue

PROJECT DESCRIPTION
This project proposes to replace approximately 1,530 feet of an existing 12-inch diameter sewer pipeline with an 18-inch diameter pipeline, in order to expand capacity to the surrounding community.

PROJECT STATUS
The design is completed with an estimated completion date of Summer 2028.

OPERATING BUDGET IMPACT
This is a rehabilitation of existing infrastructure and will not require additional operational or maintenance costs.

PROJECT FUNDING OVERVIEW

Total Project Cost	Prior Years Funding	Five-Year Plan	Remaining Needed
$ 850,000	$ 85,000	$ -	$ 765,000

TWO-YEAR BUDGET AND FIVE-YEAR PLAN

Funding Source	FY 2026/27	FY 2027/28	FY 2028/29	FY 2029/30	FY 2030/31	Total
N/A	$ -	$ -	$ -	$ -	$ -	$ -
Total Funding	**$ -**	**$ -**	**$ -**	**$ -**	**$ -**	**$ -**

SEWER MAIN REPLACEMENT - RUTLAND AVENUE

PRIORITIZATION CATEGORIES

- ☒ Risk to Health, Safety and Environment
- ☒ Regulatory or Mandated Requirements
- ☐ Asset Condition, Annual Recurring Costs, and Asset Longevity
- ☒ Community Investment and Economic Prosperity
- ☒ Level and Quality of Service
- ☒ Sustainability and Conservation
- ☐ Funding Availability
- ☐ Project Readiness
- ☒ Multiple Category Benefit and Bundling Opportunities

NEW OR EXISTING

- ☐ New Infrastructure or Facility
- ☒ Existing Infrastructure or Facility



PROJECT NUMBER 9106 **COUNCIL WARD** 7
PROJECT CATEGORY Sewer
PROJECT LOCATION West of Rutland Avenue from Penny Drive to Bruce Avenue

PROJECT DESCRIPTION
This project proposes to replace approximately 650 feet of an existing 15-inch diameter sewer pipeline with an 18-inch diameter pipeline, in order to expand the capacity for the surrounding community.

PROJECT STATUS
The project has completed the Design Phase and has an estimated completion date of Summer 2028.

OPERATING BUDGET IMPACT
This is a rehabilitation of existing infrastructure and will not require additional operational or maintenance costs.

PROJECT FUNDING OVERVIEW

Total Project Cost	Prior Years Funding	Five-Year Plan	Remaining Needed
$ 400,000	$ 40,000	$ -	$ 360,000

TWO-YEAR BUDGET AND FIVE-YEAR PLAN

Funding Source	FY 2026/27	FY 2027/28	FY 2028/29	FY 2029/30	FY 2030/31	Total
N/A	$ -	$ -	$ -	$ -	$ -	$ -
Total Funding	**$ -**	**$ -**	**$ -**	**$ -**	**$ -**	**$ -**

SEWER MAIN REPLACEMENT - SANTA ANA RIVER TRAIL

PRIORITIZATION CATEGORIES

- ☒ Risk to Health, Safety and Environment
- ☒ Regulatory or Mandated Requirements
- ☐ Asset Condition, Annual Recurring Costs, and Asset Longevity
- ☒ Community Investment and Economic Prosperity
- ☒ Level and Quality of Service
- ☒ Sustainability and Conservation
- ☐ Funding Availability
- ☐ Project Readiness
- ☒ Multiple Category Benefit and Bundling Opportunities

NEW OR EXISTING

- ☐ New Infrastructure or Facility
- ☒ Existing Infrastructure or Facility



PROJECT NUMBER 9110 **COUNCIL WARD** 3
PROJECT CATEGORY Sewer
PROJECT LOCATION North of Mountain View Avenue to Santa Ana River Trail

PROJECT DESCRIPTION
This project proposes to replace approximately 770 feet of an existing 24-inch diameter sewer pipeline with a 27-inch diameter pipeline in order to expand the capacity of the surrounding community.

PROJECT STATUS
The project is anticipated to start design in Winter 2027 with the project expected to be completed in Winter 2030.

OPERATING BUDGET IMPACT
This is a rehabilitation of existing infrastructure and will not require additional operational or maintenance costs.

PROJECT FUNDING OVERVIEW

Total Project Cost	Prior Years Funding	Five-Year Plan	Remaining Needed
$ 750,000	$ 75,000	$ -	$ 675,000

TWO-YEAR BUDGET AND FIVE-YEAR PLAN

Funding Source	FY 2026/27	FY 2027/28	FY 2028/29	FY 2029/30	FY 2030/31	Total
N/A	$ -	$ -	$ -	$ -	$ -	$ -
Total Funding	**$ -**	**$ -**	**$ -**	**$ -**	**$ -**	**$ -**

SEWER MAIN REPLACEMENT - WEST RUTLAND AVENUE

PRIORITIZATION CATEGORIES

- ☒ Risk to Health, Safety and Environment
- ☒ Regulatory or Mandated Requirements
- ☐ Asset Condition, Annual Recurring Costs, and Asset Longevity
- ☒ Community Investment and Economic Prosperity
- ☒ Level and Quality of Service
- ☒ Sustainability and Conservation
- ☐ Funding Availability
- ☐ Project Readiness
- ☒ Multiple Category Benefit and Bundling Opportunities

NEW OR EXISTING

- ☐ New Infrastructure or Facility
- ☒ Existing Infrastructure or Facility



PROJECT NUMBER 9107 **COUNCIL WARD** 7
PROJECT CATEGORY Sewer
PROJECT LOCATION West of Rutland Avenue from Arlington Avenue to Penny Drive

PROJECT DESCRIPTION
This project proposes to replace approximately 790 feet of an existing 15-inch diameter sewer pipeline with a 21-inch diameter pipeline to expand capacity to the surrounding community. This project is needed to mitigate and reduce the risk of sewer overflow during peak flow conditions.

PROJECT STATUS
The project has an anticipated completion date of Summer 2028.

OPERATING BUDGET IMPACT
This is a rehabilitation of existing infrastructure and will not require additional operational or maintenance costs.

PROJECT FUNDING OVERVIEW			
Total Project Cost	Prior Years Funding	Five-Year Plan	Remaining Needed
$ 600,000	$ 60,000	$ -	$ 540,000

TWO-YEAR BUDGET AND FIVE-YEAR PLAN						
Funding Source	FY 2026/27	FY 2027/28	FY 2028/29	FY 2029/30	FY 2030/31	Total
N/A	$ -	$ -	$ -	$ -	$ -	$ -
Total Funding	**$ -**	**$ -**	**$ -**	**$ -**	**$ -**	**$ -**

SEWER PIPE REPLACEMENT – ARLINGTON VALLEY CHANNEL

PRIORITIZATION CATEGORIES

- ☒ Risk to Health, Safety and Environment
- ☒ Regulatory or Mandated Requirements
- ☐ Asset Condition, Annual Recurring Costs, and Asset Longevity
- ☒ Community Investment and Economic Prosperity
- ☒ Level and Quality of Service
- ☒ Sustainability and Conservation
- ☐ Funding Availability
- ☐ Project Readiness
- ☒ Multiple Category Benefit and Bundling Opportunities

NEW OR EXISTING

- ☐ New Infrastructure or Facility
- ☒ Existing Infrastructure or Facility



PROJECT NUMBER 9112 **COUNCIL WARD** 7
PROJECT CATEGORY Sewer
PROJECT LOCATION Arlington Valley Channel between Golden Ave and Waterwell Court

PROJECT DESCRIPTION
This project proposes to replace approximately 2,430 feet of an existing 27-inch diameter sewer pipeline with a 33-inch diameter pipeline to expand capacity. This project is needed to mitigate and reduce the risk of sewer overflow during peak flow conditions.

PROJECT STATUS
The project is anticipated to start Summer 2027 with the project expected to be completed in Winter 2030. However, re-evaluation is needed to determine if additional capacity is still warranted as popularity of low flow plumbing equipment has alter flow patterns.

OPERATING BUDGET IMPACT
This is a rehabilitation of existing infrastructure and will not require additional operational or maintenance costs.

PROJECT FUNDING OVERVIEW

Total Project Cost	Prior Years Funding	Five-Year Plan	Remaining Needed
$ 3,000,000	$ -	$ 700,000	$ 2,300,000

TWO-YEAR BUDGET AND FIVE-YEAR PLAN

Funding Source	FY 2026/27	FY 2027/28	FY 2028/29	FY 2029/30	FY 2030/31	Total
550 - Sewer Fund	$ -	$ -	$ -	$ -	$ 700,000	$ 700,000
Total Funding	**$ -**	**$ -**	**$ -**	**$ -**	**$ 700,000**	**$ 700,000**

SEWER PIPE REPLACEMENT - GOLDEN AVENUE

PRIORITIZATION CATEGORIES

- ☒ Risk to Health, Safety and Environment
- ☒ Regulatory or Mandated Requirements
- ☐ Asset Condition, Annual Recurring Costs, and Asset Longevity
- ☒ Community Investment and Economic Prosperity
- ☒ Level and Quality of Service
- ☒ Sustainability and Conservation
- ☐ Funding Availability
- ☐ Project Readiness
- ☒ Multiple Category Benefit and Bundling Opportunities

NEW OR EXISTING

- ☐ New Infrastructure or Facility
- ☒ Existing Infrastructure or Facility



PROJECT NUMBER 9109 **COUNCIL WARD** 6, 7
PROJECT CATEGORY Sewer
PROJECT LOCATION Golden Avenue between Cochran and Arlington Valley Channel

PROJECT DESCRIPTION
This project proposes to replace approximately 970 feet of an existing 12-inch diameter sewer pipeline with an 18-inch diameter pipeline to expand capacity to the surrounding community. This project is intended to mitigate and reduce the risk of sewer overflow during peak flow conditions.

PROJECT STATUS
The project has completed the Design Phase with the project expected to complete Winter 2028.

OPERATING BUDGET IMPACT
This is a rehabilitation of existing infrastructure and will not require additional operational or maintenance costs.

PROJECT FUNDING OVERVIEW

Total Project Cost	Prior Years Funding	Five-Year Plan	Remaining Needed
$ 600,000	$ 60,000	$ -	$ 540,000

TWO-YEAR BUDGET AND FIVE-YEAR PLAN

Funding Source	FY 2026/27	FY 2027/28	FY 2028/29	FY 2029/30	FY 2030/31	Total
N/A	$ -	$ -	$ -	$ -	$ -	$ -
Total Funding	**$ -**	**$ -**	**$ -**	**$ -**	**$ -**	**$ -**

SEWER PIPE REPLACEMENT - MORRIS STREET

PRIORITIZATION CATEGORIES

- ☒ Risk to Health, Safety and Environment
- ☒ Regulatory or Mandated Requirements
- ☐ Asset Condition, Annual Recurring Costs, and Asset Longevity
- ☒ Community Investment and Economic Prosperity
- ☒ Level and Quality of Service
- ☒ Sustainability and Conservation
- ☐ Funding Availability
- ☐ Project Readiness
- ☒ Multiple Category Benefit and Bundling Opportunities

NEW OR EXISTING

- ☐ New Infrastructure or Facility
- ☒ Existing Infrastructure or Facility



PROJECT NUMBER 9113 **COUNCIL WARD** 7
PROJECT CATEGORY Sewer
PROJECT LOCATION Along Morris Street; from Van Buren Boulevard to Doolittle Avenue

PROJECT DESCRIPTION
This project proposes to replace approximately 1,490 feet of an existing 33-inch diameter sewer pipeline with a 42-inch diameter pipeline in order to expand capacity. This project is needed to mitigate and reduce the risk of sewer overflow during peak flow conditions.

PROJECT STATUS
Project design is completed and project is expected to be completed in Winter 2030.

OPERATING BUDGET IMPACT
This is a rehabilitation of existing infrastructure and will not impact operating budget. However, re-evaluation is needed to determine if more capacity is still needed as popularity of low flow plumbing has altered flow patterns.

PROJECT FUNDING OVERVIEW

Total Project Cost	Prior Years Funding	Five-Year Plan	Remaining Needed
$ 2,000,000	$ 200,000	$ -	$ 1,800,000

TWO-YEAR BUDGET AND FIVE-YEAR PLAN

Funding Source	FY 2026/27	FY 2027/28	FY 2028/29	FY 2029/30	FY 2030/31	Total
N/A	$ -	$ -	$ -	$ -	$ -	$ -
Total Funding	**$ -**	**$ -**	**$ -**	**$ -**	**$ -**	**$ -**

TEQUESQUITE LANDFILL BLOWER PROJECT

PRIORITIZATION CATEGORIES

- ☒ Risk to Health, Safety and Environment
- ☒ Regulatory or Mandated Requirements
- ☒ Asset Condition, Annual Recurring Costs, and Asset Longevity
- ☐ Community Investment and Economic Prosperity
- ☐ Level and Quality of Service
- ☒ Sustainability and Conservation
- ☒ Funding Availability
- ☐ Project Readiness
- ☐ Multiple Category Benefit and Bundling Opportunities

NEW OR EXISTING

- ☐ New Infrastructure or Facility
- ☒ Existing Infrastructure or Facility



PROJECT NUMBER 9218 **COUNCIL WARD** All Wards
PROJECT CATEGORY Sewer
PROJECT LOCATION 6253 Tequesquite Avenue

PROJECT DESCRIPTION

The Tequesquite Landfill Blower Project will replace three existing vane-type compressors, which are at the end of their useful life, with two high-efficiency blowers that are better suited for the landfill's current gas conditions. Replacement is necessary to maintain regulatory compliance and ensure public safety. Since the treatment plant no longer utilizes landfill gas and the gas is now burned off through a flare station, blowers are more appropriate. This project will improve system reliability, reduce operational and energy costs, and improve environmental conditions in sensitive areas by reducing noise. With proper maintenance, the new blowers are expected to have an estimated service life of approximately 20 years.

PROJECT STATUS

Construction contract was awarded on 12/9/2025. Construction is anticipated to commence in Spring 2027 with completion estimated in Summer 2027. This is due to long lead items that take more than 30 weeks to secure.

OPERATING BUDGET IMPACT

This is a rehabilitation of existing infrastructure and will not require additional operational or maintenance costs. Operation and maintenance cost will decrease due to new high efficiency motors for blowers.

PROJECT FUNDING OVERVIEW

Total Project Cost	Prior Years Funding	Five-Year Plan	Remaining Needed
$ 1,510,000	$ 1,510,000	$ -	$ -

TWO-YEAR BUDGET AND FIVE-YEAR PLAN

Funding Source	FY 2026/27	FY 2027/28	FY 2028/29	FY 2029/30	FY 2030/31	Total
N/A	$ -	$ -	$ -	$ -	$ -	$ -
Total Funding	**$ -**	**$ -**	**$ -**	**$ -**	**$ -**	**$ -**

TERTIARY SYSTEM REHABILITATION - PHASE I

PRIORITIZATION CATEGORIES

- ☒ Risk to Health, Safety and Environment
- ☒ Regulatory or Mandated Requirements
- ☒ Asset Condition, Annual Recurring Costs, and Asset Longevity
- ☒ Community Investment and Economic Prosperity
- ☐ Level and Quality of Service
- ☒ Sustainability and Conservation
- ☐ Funding Availability
- ☐ Project Readiness
- ☒ Multiple Category Benefit and Bundling Opportunities

NEW OR EXISTING

- ☐ New Infrastructure or Facility
- ☒ Existing Infrastructure or Facility



PROJECT NUMBER 8613 **COUNCIL WARD** All Wards
PROJECT CATEGORY Sewer
PROJECT LOCATION 5950 Acorn Street, Water Quality Control Plant

PROJECT DESCRIPTION
This project involves the rehabilitation of the tertiary filtration system, which is nearing the end of its useful life. The scope includes replacing troughs, conducting inspections, preparing a Tertiary Preliminary Design Report, and upgrading the filtration media beds to cloth filters. These improvements will enhance the system's efficiency and ensure continued reliable operation.

PROJECT STATUS
The Tertiary System Rehabilitation – Phase I project at the Riverside Water Quality Control Plant is currently in the planning phase but is temporarily on hold while the City seeks the necessary financial resources to move the project forward. Current efforts are focused on identifying and securing potential funding sources that will support the rehabilitation work and allow the project to proceed into design and construction. Once funding is secured, the project is anticipated to require approximately seven years to complete, with a tentative estimated completion around 2032. This timeline reflects the full project lifecycle, including planning, design, bidding, and construction activities needed to successfully rehabilitate the tertiary treatment system and ensure continued reliable plant operations.

OPERATING BUDGET IMPACT
This is a rehabilitation of existing infrastructure and will not require additional operational or maintenance costs.

PROJECT FUNDING OVERVIEW

Total Project Cost	Prior Years Funding	Five-Year Plan	Remaining Needed
$ 985,804	$ 985,804	$ -	$ -

TWO-YEAR BUDGET AND FIVE-YEAR PLAN

Funding Source	FY 2026/27	FY 2027/28	FY 2028/29	FY 2029/30	FY 2030/31	Total
N/A	$ -	$ -	$ -	$ -	$ -	$ -
Total Funding	**$ -**	**$ -**	**$ -**	**$ -**	**$ -**	**$ -**

THIRD STREET SEWER IMPROVEMENT

PRIORITIZATION CATEGORIES

- ☒ Risk to Health, Safety and Environment
- ☐ Regulatory or Mandated Requirements
- ☐ Asset Condition, Annual Recurring Costs, and Asset Longevity
- ☐ Community Investment and Economic Prosperity
- ☐ Level and Quality of Service
- ☐ Sustainability and Conservation
- ☐ Funding Availability
- ☐ Project Readiness
- ☐ Multiple Category Benefit and Bundling Opportunities

NEW OR EXISTING

- ☐ New Infrastructure or Facility
- ☒ Existing Infrastructure or Facility



PROJECT NUMBER 9325 **COUNCIL WARD** 1
PROJECT CATEGORY Sewer
PROJECT LOCATION Third Street from Vine Street to Market Street

PROJECT DESCRIPTION
The Third Street Sewer Improvement project involves the replacement of existing sewer pipes along Third Street from Vine Street to Market Street using polyvinyl chloride (PVC) piping. The project is needed to increase pipe capacity to accommodate additional diverted sewer flow from the Third Street Grade Separation, addressing aging infrastructure and reducing risks of sanitary sewer overflows, service disruptions, and public health impacts. The new sewer main is designed for a service life of approximately 100 years with proper maintenance, providing a long-term, reliable investment in the City's wastewater infrastructure.

PROJECT STATUS
Project is currently being advertised for bids with anticipated construction to commence in Spring 2026 and an estimated completion date of Fall 2026.

OPERATING BUDGET IMPACT
This is a replacement of existing infrastructure and will not require additional operational or maintenance costs.

PROJECT FUNDING OVERVIEW

Total Project Cost	Prior Years Funding	Five-Year Plan	Remaining Needed
$ 2,500,000	$ 2,500,000	$ -	$ -

TWO-YEAR BUDGET AND FIVE-YEAR PLAN

Funding Source	FY 2026/27	FY 2027/28	FY 2028/29	FY 2029/30	FY 2030/31	Total
N/A	$ -	$ -	$ -	$ -	$ -	$ -
Total Funding	**$ -**	**$ -**	**$ -**	**$ -**	**$ -**	**$ -**

WASTEWATER LIFT STATIONS

PRIORITIZATION CATEGORIES

- ☒ Risk to Health, Safety and Environment
- ☒ Regulatory or Mandated Requirements
- ☐ Asset Condition, Annual Recurring Costs, and Asset Longevity
- ☒ Community Investment and Economic Prosperity
- ☒ Level and Quality of Service
- ☐ Sustainability and Conservation
- ☒ Funding Availability
- ☒ Project Readiness
- ☒ Multiple Category Benefit and Bundling Opportunities

NEW OR EXISTING

- ☐ New Infrastructure or Facility
- ☒ Existing Infrastructure or Facility



PROJECT NUMBER 8943
PROJECT CATEGORY Sewer
PROJECT LOCATION Various
COUNCIL WARD 2

PROJECT DESCRIPTION
This project will replace and rehabilitate parts of various wastewater lift stations. It will include the replacement of dilapidated mechanical parts, upgrade of electrical parts, pump control, and communication systems; and install electrical components to connect to emergency generator power. The project includes the replacement and upgrading of the Western Lift Station and the Garden Hills Lift Station.

PROJECT STATUS
The design of the replacement stations is anticipated to complete in Spring 2026 with construction anticipated to complete in Winter 2026.

OPERATING BUDGET IMPACT
This is a rehabilitation of existing infrastructure and will not require additional operational or maintenance costs.

PROJECT FUNDING OVERVIEW

Total Project Cost	Prior Years Funding	Five-Year Plan	Remaining Needed
$ 2,000,000	$ 534,629	$ -	$ 1,465,371

TWO-YEAR BUDGET AND FIVE-YEAR PLAN

Funding Source	FY 2026/27	FY 2027/28	FY 2028/29	FY 2029/30	FY 2030/31	Total
N/A	$ -	$ -	$ -	$ -	$ -	$ -
Total Funding	**$ -**	**$ -**	**$ -**	**$ -**	**$ -**	**$ -**

WATER QUALITY CONTROL PLANT - 3D GIS ASSET MANAGEMENT

PRIORITIZATION CATEGORIES

- ☐ Risk to Health, Safety and Environment
- ☐ Regulatory or Mandated Requirements
- ☒ Asset Condition, Annual Recurring Costs, and Asset Longevity
- ☒ Community Investment and Economic Prosperity
- ☒ Level and Quality of Service
- ☒ Sustainability and Conservation
- ☐ Funding Availability
- ☐ Project Readiness
- ☒ Multiple Category Benefit and Bundling Opportunities

NEW OR EXISTING

- ☐ New Infrastructure or Facility
- ☒ Existing Infrastructure or Facility

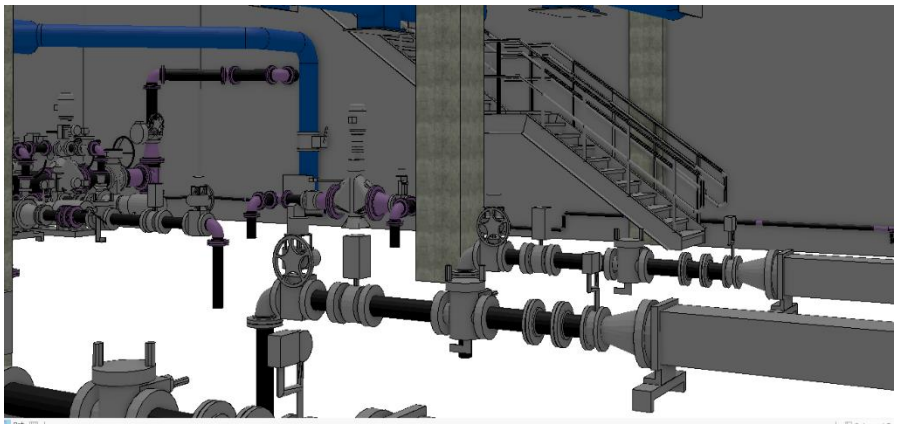

PROJECT NUMBER 9223 **COUNCIL WARD** All Wards
PROJECT CATEGORY Sewer
PROJECT LOCATION 5950 Acorn Street, Water Quality Control Plant

PROJECT DESCRIPTION

This project is for the phasing out and replacing an asset management software suite. Operation and maintenance staff at the Riverside Water Quality Control Plant (RWQCP) use two asset management software programs (UWAM by Oracle and ActiveManuals). Utilities Work and Asset Management (UWAM) by Oracle is a main software program that everyone in the City of Riverside uses. UWAM provides inventory tracking and scheduling maintenance for all equipment at the RWQCP. ActiveManuals was installed in 2014 for operations and maintenance. However, ActiveManual has minimal functionality and does not communicate well with the UWAM database. ActiveManuals will need to be replaced by a highly interactive 3D user interface that will be compatible with the City of Riverside UWAM's database.

PROJECT STATUS

The project is currently in the planning phase, with activities focused on collecting data, inventorying equipment, and accurately pinpointing the locations of equipment and buildings within the plant. The purpose of this project is to support the replacement of existing compressors that are reaching the end of their useful life, which is critical for regulatory compliance and public safety. The project is expected to be rolled out over several years and targeted for full implementation by Summer 2032.

OPERATING BUDGET IMPACT

This is a rehabilitation of existing infrastructure and will not require additional operational or maintenance costs.

PROJECT FUNDING OVERVIEW			
Total Project Cost	Prior Years Funding	Five-Year Plan	Remaining Needed
$ 850,000	$ 100,000	$ -	$ 750,000

TWO-YEAR BUDGET AND FIVE-YEAR PLAN						
Funding Source	FY 2026/27	FY 2027/28	FY 2028/29	FY 2029/30	FY 2030/31	Total
N/A	$ -	$ -	$ -	$ -	$ -	$ -
Total Funding	**$ -**	**$ -**	**$ -**	**$ -**	**$ -**	**$ -**

WATER QUALITY CONTROL PLANT - ACTIVATED TREATMENT TRAIN REHABILITATION

PRIORITIZATION CATEGORIES

- ☒ Risk to Health, Safety and Environment
- ☒ Regulatory or Mandated Requirements
- ☐ Asset Condition, Annual Recurring Costs, and Asset Longevity
- ☐ Community Investment and Economic Prosperity
- ☐ Level and Quality of Service
- ☐ Sustainability and Conservation
- ☐ Funding Availability
- ☐ Project Readiness
- ☒ Multiple Category Benefit and Bundling Opportunities

NEW OR EXISTING

- ☐ New Infrastructure or Facility
- ☒ Existing Infrastructure or Facility



PROJECT NUMBER 9118 **COUNCIL WARD** All Wards
PROJECT CATEGORY Sewer
PROJECT LOCATION 5950 Acorn Street, Water Quality Control Plant

PROJECT DESCRIPTION
The Water Quality Control Plant – Activated Treatment Train Rehabilitation project is designed to restore, upgrade, and optimize the activated sludge process for biological nutrient removal, enhancing efficiency, increasing capacity, and prolonging the life of aging infrastructure. The project will rehabilitate key components of the activated treatment train, improving system reliability, meeting regulatory standards, and extending the process's useful life. The rehabilitated components are expected to have a service life of approximately 20 years with proper maintenance, ensuring long-term operational value and supporting sustainable wastewater treatment operations for the city.

PROJECT STATUS
The project design will begin in Fall 2027 and construction will begin in Summer 2032.

OPERATING BUDGET IMPACT
This is a rehabilitation of existing infrastructure and will not require additional operational or maintenance costs.

PROJECT FUNDING OVERVIEW

Total Project Cost	Prior Years Funding	Five-Year Plan	Remaining Needed
$ 5,989,200	$ 550,000	$ -	$ 5,439,200

TWO-YEAR BUDGET AND FIVE-YEAR PLAN

Funding Source	FY 2026/27	FY 2027/28	FY 2028/29	FY 2029/30	FY 2030/31	Total
N/A	$ -	$ -	$ -	$ -	$ -	$ -
Total Funding	**$ -**	**$ -**	**$ -**	**$ -**	**$ -**	**$ -**

WATER QUALITY CONTROL PLANT - BIOSOLIDS EQUIPMENT AND PIPING REHAB

PRIORITIZATION CATEGORIES

- ☒ Risk to Health, Safety and Environment
- ☒ Regulatory or Mandated Requirements
- ☐ Asset Condition, Annual Recurring Costs, and Asset Longevity
- ☐ Community Investment and Economic Prosperity
- ☐ Level and Quality of Service
- ☐ Sustainability and Conservation
- ☐ Funding Availability
- ☐ Project Readiness
- ☒ Multiple Category Benefit and Bundling Opportunities

NEW OR EXISTING

- ☐ New Infrastructure or Facility
- ☒ Existing Infrastructure or Facility



PROJECT NUMBER 9178 **COUNCIL WARD** All Wards
PROJECT CATEGORY Sewer
PROJECT LOCATION 5950 Acorn Street, Water Quality Control Plant

PROJECT DESCRIPTION
This project will replace the main dewatering centrifuge and install larger diameter piping to the sludge silos to expand plant capacity. The equipment is over twenty years old and near the end of its useful life.

PROJECT STATUS
A new centrifuge, together with new control panels, pumps, and piping system were purchased and will be delivered to the site in January 2026. Installation is anticipated in Summer 2026.

OPERATING BUDGET IMPACT
This is a rehabilitation of existing infrastructure and will not require additional operational or maintenance costs.

PROJECT FUNDING OVERVIEW

Total Project Cost	Prior Years Funding	Five-Year Plan	Remaining Needed
$ 4,046,010	$ 4,046,010	$ -	$ -

TWO-YEAR BUDGET AND FIVE-YEAR PLAN

Funding Source	FY 2026/27	FY 2027/28	FY 2028/29	FY 2029/30	FY 2030/31	Total
N/A	$ -	$ -	$ -	$ -	$ -	$ -
Total Funding	**$ -**	**$ -**	**$ -**	**$ -**	**$ -**	**$ -**

WATER QUALITY CONTROL PLANT – BUTTERFLY VALVE REPLACEMENT

PRIORITIZATION CATEGORIES

- ☒ Risk to Health, Safety and Environment
- ☐ Regulatory or Mandated Requirements
- ☒ Asset Condition, Annual Recurring Costs, and Asset Longevity
- ☐ Community Investment and Economic Prosperity
- ☐ Level and Quality of Service
- ☐ Sustainability and Conservation
- ☐ Funding Availability
- ☐ Project Readiness
- ☒ Multiple Category Benefit and Bundling Opportunities

NEW OR EXISTING

- ☐ New Infrastructure or Facility
- ☒ Existing Infrastructure or Facility

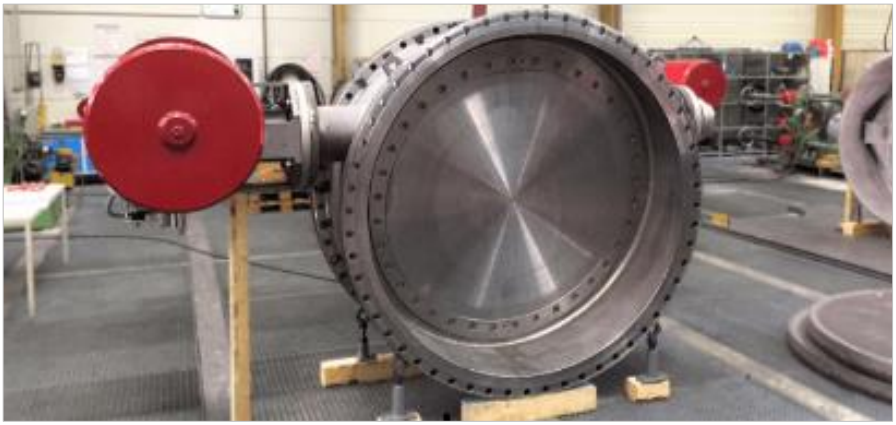

PROJECT NUMBER 9337 **COUNCIL WARD** 3
PROJECT CATEGORY Sewer
PROJECT LOCATION 5950 Acorn Street, Water Quality Control Plant

PROJECT DESCRIPTION
The existing 66-inch butterfly valve, originally installed in 1990, has reached the end of its useful life after more than 30 years of service. Its deteriorated condition limits the ability to properly control or isolate the discharge pipeline, preventing safe maintenance and calibration of downstream flowmeters required for accurate compliance reporting. This project consists of the procurement and replacement of one (1) 66-inch Pratt Flange 150B Butterfly Valve (BFV) and associated appurtenances at the Riverside Water Quality Control Plant (RWQCP). The project ensures compatibility with existing system infrastructure and supports continued operation of flow regulation and measurement equipment essential to plant performance and regulatory compliance.

PROJECT STATUS
This project is expected to start in Summer 2027 and estimated to complete in Fall 2027.

OPERATING BUDGET IMPACT
This purchase is a one-time capital expenditure and will not have a significant impact on the operating budget. Ongoing operational costs will remain consistent with current levels and will be absorbed within the existing Public Works Wastewater Division operating budget.

PROJECT FUNDING OVERVIEW

Total Project Cost	Prior Years Funding	Five-Year Plan	Remaining Needed
$ 400,000	$ 400,000	$ -	$ -

TWO-YEAR BUDGET AND FIVE-YEAR PLAN

Funding Source	FY 2026/27	FY 2027/28	FY 2028/29	FY 2029/30	FY 2030/31	Total
N/A	$ -	$ -	$ -	$ -	$ -	$ -
Total Funding	**$ -**	**$ -**	**$ -**	**$ -**	**$ -**	**$ -**

WATER QUALITY CONTROL PLANT - CHLORINE CONTACT BASIN REHABILITATION

PRIORITIZATION CATEGORIES

- ☒ Risk to Health, Safety and Environment
- ☒ Regulatory or Mandated Requirements
- ☐ Asset Condition, Annual Recurring Costs, and Asset Longevity
- ☒ Community Investment and Economic Prosperity
- ☒ Level and Quality of Service
- ☒ Sustainability and Conservation
- ☐ Funding Availability
- ☐ Project Readiness
- ☒ Multiple Category Benefit and Bundling Opportunities

NEW OR EXISTING

- ☐ New Infrastructure or Facility
- ☒ Existing Infrastructure or Facility



PROJECT NUMBER 9179 **COUNCIL WARD** All Wards
PROJECT CATEGORY Sewer
PROJECT LOCATION 5950 Acorn Street, Water Quality Control Plant

PROJECT DESCRIPTION
This project will convert chloramine disinfection to free chlorine disinfection. The modifications are in relation to meeting the discharge requirements established by the Water Resources Control Board Division of Drinking Water for alternative disinfection technology for compliance with the California State law.

PROJECT STATUS
The construction of this project is completed, pending approval from the State for operating on lower chlorine dosage. Site visit from the State is anticipated in Summer 2026 where approval would be granted.

OPERATING BUDGET IMPACT
This is a rehabilitation of existing infrastructure and will not require additional operational or maintenance costs.

PROJECT FUNDING OVERVIEW

Total Project Cost	Prior Years Funding	Five-Year Plan	Remaining Needed
$ 2,114,878	$ 2,114,878	$ -	$ -

TWO-YEAR BUDGET AND FIVE-YEAR PLAN

Funding Source	FY 2026/27	FY 2027/28	FY 2028/29	FY 2029/30	FY 2030/31	Total
N/A	$ -	$ -	$ -	$ -	$ -	$ -
Total Funding	**$ -**	**$ -**	**$ -**	**$ -**	**$ -**	**$ -**

WATER QUALITY CONTROL PLANT - DIGESTER NO. V REHABILITATION

PRIORITIZATION CATEGORIES

- ☐ Risk to Health, Safety and Environment
- ☐ Regulatory or Mandated Requirements
- ☐ Asset Condition, Annual Recurring Costs, and Asset Longevity
- ☒ Community Investment and Economic Prosperity
- ☐ Level and Quality of Service
- ☒ Sustainability and Conservation
- ☐ Funding Availability
- ☐ Project Readiness
- ☒ Multiple Category Benefit and Bundling Opportunities

NEW OR EXISTING

- ☐ New Infrastructure or Facility
- ☒ Existing Infrastructure or Facility



PROJECT NUMBER 9124 **COUNCIL WARD** All Wards
PROJECT CATEGORY Sewer
PROJECT LOCATION 5950 Acorn Street, Water Quality Control Plant

PROJECT DESCRIPTION
This project rehabilitates the currently unused Digester No. V at the Water Quality Control Plant. The project will allow the digester to be rehabilitated to treat food waste and organic matter for regulatory food waste regulations. The project will also address regulatory compliance and City sustainability efforts.

PROJECT STATUS
Public-Private-Partnership (P3) Entity Anaergia was approved by Council on 12/19/2023. Scope of work and cost will be available in Spring 2024 with construction anticipated to commence in Summer 2024. This project is anticipated to be completed in Summer 2026.

OPERATING BUDGET IMPACT
This is a rehabilitation of existing infrastructure and will not require additional operational or maintenance costs.

PROJECT FUNDING OVERVIEW

Total Project Cost	Prior Years Funding	Five-Year Plan	Remaining Needed
$ 11,434,200	$ 11,434,200	$ -	$ -

TWO-YEAR BUDGET AND FIVE-YEAR PLAN

Funding Source	FY 2026/27	FY 2027/28	FY 2028/29	FY 2029/30	FY 2030/31	Total
N/A	$ -	$ -	$ -	$ -	$ -	$ -
Total Funding	**$ -**	**$ -**	**$ -**	**$ -**	**$ -**	**$ -**

WATER QUALITY CONTROL PLANT - GAS LINE REPAIR

PRIORITIZATION CATEGORIES

- ☒ Risk to Health, Safety and Environment
- ☐ Regulatory or Mandated Requirements
- ☒ Asset Condition, Annual Recurring Costs, and Asset Longevity
- ☒ Community Investment and Economic Prosperity
- ☒ Level and Quality of Service
- ☐ Sustainability and Conservation
- ☒ Funding Availability
- ☒ Project Readiness
- ☒ Multiple Category Benefit and Bundling Opportunities

NEW OR EXISTING

- ☐ New Infrastructure or Facility
- ☒ Existing Infrastructure or Facility



PROJECT NUMBER 9300 **COUNCIL WARD** 3
PROJECT CATEGORY Sewer
PROJECT LOCATION 5950 Acorn Street, Water Quality Control Plant

PROJECT DESCRIPTION
This project repairs the gas line system at the Riverside Water Quality Control Plant. Work includes locating and abandoning a portion of the existing, failing gas pipe, installing new isolation gas valves, and installing new gas lines. This project is necessary to address a history of multiple gas leaks, enhancing the safety, reliability, and capacity of the gas system. The new system will minimize future disruptions and ensure the continued, safe operation of the plant, which serves the entire City.

PROJECT STATUS
Project is under construction with anticipated completion in Fall 2026.

OPERATING BUDGET IMPACT
This is a rehabilitation of existing infrastructure and will not require additional operational costs.

PROJECT FUNDING OVERVIEW

Total Project Cost	Prior Years Funding	Five-Year Plan	Remaining Needed
$ 185,000	$ 185,000	$ -	$ -

TWO-YEAR BUDGET AND FIVE-YEAR PLAN

Funding Source	FY 2026/27	FY 2027/28	FY 2028/29	FY 2029/30	FY 2030/31	Total
N/A	$ -	$ -	$ -	$ -	$ -	$ -
Total Funding	**$ -**	**$ -**	**$ -**	**$ -**	**$ -**	**$ -**

WATER QUALITY CONTROL PLANT - HEADWORKS AREA REHABILITATION

PRIORITIZATION CATEGORIES

- ☒ Risk to Health, Safety and Environment
- ☒ Regulatory or Mandated Requirements
- ☐ Asset Condition, Annual Recurring Costs, and Asset Longevity
- ☐ Community Investment and Economic Prosperity
- ☐ Level and Quality of Service
- ☐ Sustainability and Conservation
- ☐ Funding Availability
- ☐ Project Readiness
- ☒ Multiple Category Benefit and Bundling Opportunities

NEW OR EXISTING

- ☐ New Infrastructure or Facility
- ☒ Existing Infrastructure or Facility



PROJECT NUMBER 9117 **COUNCIL WARD** All Wards
PROJECT CATEGORY Sewer
PROJECT LOCATION 5950 Acorn Street, Water Quality Control Plant

PROJECT DESCRIPTION
The current Headworks area at the Water Quality Control Plant (WQCP) was constructed in 1999 and consists of a screening room, blower room, electrical room, grit chambers, and grit pumping room. The Headworks area has not received a major mechanical rehabilitation since its construction and there are varying levels of deterioration for the mechanical components within this process area. The grit chambers and grit pumping room underwent a condition assessment in 2017. The findings recommended the replacement of mechanical equipment.

PROJECT STATUS
The Water Quality Control Plant – Headworks Area Rehabilitation project is currently in the planning phase, with activities focused on scoping and preliminary planning. The design phase is anticipated to begin in Fall 2027 and construction is scheduled to begin in Spring 2030. The project is estimated for completion by Fall 2032.

OPERATING BUDGET IMPACT
This is a rehabilitation of existing infrastructure and will not require additional operational or maintenance costs.

PROJECT FUNDING OVERVIEW			
Total Project Cost	Prior Years Funding	Five-Year Plan	Remaining Needed
$ 12,642,600	$ 3,295,785	$ -	$ 9,346,815

TWO-YEAR BUDGET AND FIVE-YEAR PLAN						
Funding Source	FY 2026/27	FY 2027/28	FY 2028/29	FY 2029/30	FY 2030/31	Total
N/A	$ -	$ -	$ -	$ -	$ -	$ -
Total Funding	**$ -**	**$ -**	**$ -**	**$ -**	**$ -**	**$ -**

WATER QUALITY CONTROL PLANT - MASTER PLAN UPDATE

PRIORITIZATION CATEGORIES

- ☒ Risk to Health, Safety and Environment
- ☒ Regulatory or Mandated Requirements
- ☒ Asset Condition, Annual Recurring Costs, and Asset Longevity
- ☒ Community Investment and Economic Prosperity
- ☒ Level and Quality of Service
- ☒ Sustainability and Conservation
- ☐ Funding Availability
- ☐ Project Readiness
- ☒ Multiple Category Benefit and Bundling Opportunities

NEW OR EXISTING

- ☒ New Infrastructure or Facility
- ☒ Existing Infrastructure or Facility

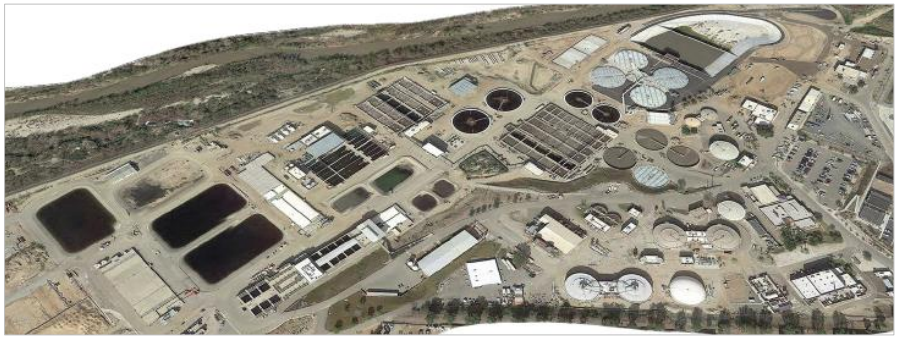

PROJECT NUMBER 8944 **COUNCIL WARD** All Wards
PROJECT CATEGORY Sewer
PROJECT LOCATION 5950 Acorn Street, Water Quality Control Plant

PROJECT DESCRIPTION
The Public Works Department maintains an Integrated Master Plan for Wastewater Collection and Treatment Facilities (Wastewater Master Plan) that provides a comprehensive review and evaluation of the City's wastewater systems. Based on the findings of the evaluation, the Wastewater Master Plan recommends improvements and financing alternatives to ensure regulatory compliance; aging infrastructure is repaired and/or replaced; continued reliable and cost-effective wastewater service is provided to customers; and the City's General Plan is supported for planned growth of the community.

PROJECT STATUS
The Financial Plan and User Rate Fees are being reviewed and updated to reflect the current annual expenditure and revenue. Estimated completion date is Summer 2027.

OPERATING BUDGET IMPACT
There are no maintenance costs associated with this project as this is an update to the Master Plan.

PROJECT FUNDING OVERVIEW

Total Project Cost	Prior Years Funding	Five-Year Plan	Remaining Needed
$ 3,083,778	$ 2,991,354	$ 92,424	$ -

TWO-YEAR BUDGET AND FIVE-YEAR PLAN

Funding Source	FY 2026/27	FY 2027/28	FY 2028/29	FY 2029/30	FY 2030/31	Total
550 - Sewer Fund	$ -	$ 92,424	$ -	$ -	$ -	$ 92,424
Total Funding	**$ -**	**$ 92,424**	**$ -**	**$ -**	**$ -**	**$ 92,424**

WATER QUALITY CONTROL PLANT - PLANT II ACTIVATED SLUDGE REHABILITATION

PRIORITIZATION CATEGORIES

- ☒ Risk to Health, Safety and Environment
- ☒ Regulatory or Mandated Requirements
- ☒ Asset Condition, Annual Recurring Costs, and Asset Longevity
- ☒ Community Investment and Economic Prosperity
- ☐ Level and Quality of Service
- ☒ Sustainability and Conservation
- ☐ Funding Availability
- ☐ Project Readiness
- ☒ Multiple Category Benefit and Bundling Opportunities

NEW OR EXISTING

- ☐ New Infrastructure or Facility
- ☒ Existing Infrastructure or Facility



PROJECT NUMBER 9045 **COUNCIL WARD** All Wards
PROJECT CATEGORY Sewer
PROJECT LOCATION 5950 Acorn Street, Water Quality Control Plant

PROJECT DESCRIPTION
The project will provide upgrades to restore, optimize, and increase the capacity of the activated sludge process for biological nutrient removal. The work will improve reliability, extend the system's useful life, and the new equipment is expected to last 20 years with proper maintenance.

PROJECT STATUS
Infrastructures to facilitate the rehabilitation of the activated sludge in plant II are completed. Design for this project is slated to commence in Summer 2026 with construction completion in December 2028.

OPERATING BUDGET IMPACT
This is a rehabilitation of existing infrastructure and will not require additional operational or maintenance costs.

PROJECT FUNDING OVERVIEW

Total Project Cost	Prior Years Funding	Five-Year Plan	Remaining Needed
$ 650,500	$ 650,500	$ -	$ -

TWO-YEAR BUDGET AND FIVE-YEAR PLAN

Funding Source	FY 2026/27	FY 2027/28	FY 2028/29	FY 2029/30	FY 2030/31	Total
N/A	$ -	$ -	$ -	$ -	$ -	$ -
Total Funding	**$ -**	**$ -**	**$ -**	**$ -**	**$ -**	**$ -**

WATER QUALITY CONTROL PLANT - PLANT II SLUDGE PUMPS I & II REHABILITATION

PRIORITIZATION CATEGORIES

- ☒ Risk to Health, Safety and Environment
- ☒ Regulatory or Mandated Requirements
- ☒ Asset Condition, Annual Recurring Costs, and Asset Longevity
- ☒ Community Investment and Economic Prosperity
- ☐ Level and Quality of Service
- ☒ Sustainability and Conservation
- ☐ Funding Availability
- ☐ Project Readiness
- ☒ Multiple Category Benefit and Bundling Opportunities

NEW OR EXISTING

- ☐ New Infrastructure or Facility
- ☒ Existing Infrastructure or Facility



PROJECT NUMBER 9119 **COUNCIL WARD** All Wards
PROJECT CATEGORY Sewer
PROJECT LOCATION 5950 Acorn Street, Water Quality Control Plant

PROJECT DESCRIPTION
This project is for the rehabilitation of the following plant equipment: valves, pumps, variable-speed motors, electrical and instrumentation panels, ventilation systems, and lighting mandated per National Pollutant Discharge Elimination System (NPDES) Permit authorized by the Clean Water Act.

PROJECT STATUS
The design is scheduled to begin Summer 2026 and construction is expected to begin in late Fall 2032.

OPERATING BUDGET IMPACT
This is a rehabilitation of existing infrastructure and will not require additional operational or maintenance costs.

PROJECT FUNDING OVERVIEW

Total Project Cost	Prior Years Funding	Five-Year Plan	Remaining Needed
$ 2,625,700	$ 250,000	$ 600,000	$ 1,775,700

TWO-YEAR BUDGET AND FIVE-YEAR PLAN

Funding Source	FY 2026/27	FY 2027/28	FY 2028/29	FY 2029/30	FY 2030/31	Total
550 - Sewer Fund	$ -	$ 600,000	$ -	$ -	$ -	$ 600,000
Total Funding	**$ -**	**$ 600,000**	**$ -**	**$ -**	**$ -**	**$ 600,000**

WATER QUALITY CONTROL PLANT - RENEWABLE NATURAL GAS INTERCONNECTION FACILITY

PRIORITIZATION CATEGORIES

- ☐ Risk to Health, Safety and Environment
- ☐ Regulatory or Mandated Requirements
- ☐ Asset Condition, Annual Recurring Costs, and Asset Longevity
- ☒ Community Investment and Economic Prosperity
- ☐ Level and Quality of Service
- ☒ Sustainability and Conservation
- ☐ Funding Availability
- ☐ Project Readiness
- ☒ Multiple Category Benefit and Bundling Opportunities

NEW OR EXISTING

- ☒ New Infrastructure or Facility
- ☐ Existing Infrastructure or Facility



PROJECT NUMBER 9125 **COUNCIL WARD** All Wards
PROJECT CATEGORY Sewer
PROJECT LOCATION 5950 Acorn Street, Water Quality Control Plant

PROJECT DESCRIPTION
This project is for the installation of digester gas clean-up equipment and piping to an injection point to the Southern California Gas Company Natural Gas transmission main. Bio-methane will be converted to natural gas and injected into the Southern California Gas Company natural gas transmission main.

PROJECT STATUS
Interconnection design by SoCal Gas is 90% completed as of December 2025, with an estimated completion date by Winter 2026.

OPERATING BUDGET IMPACT
No operating impact as this will not require maintenance costs once construction is completed.

PROJECT FUNDING OVERVIEW

Total Project Cost	Prior Years Funding	Five-Year Plan	Remaining Needed
$ 2,050,000	$ 2,050,000	$ -	$ -

TWO-YEAR BUDGET AND FIVE-YEAR PLAN

Funding Source	FY 2026/27	FY 2027/28	FY 2028/29	FY 2029/30	FY 2030/31	Total
N/A	$ -	$ -	$ -	$ -	$ -	$ -
Total Funding	**$ -**	**$ -**	**$ -**	**$ -**	**$ -**	**$ -**

WATER QUALITY CONTROL PLANT - SCADA INFRASTRUCTURE REPLACEMENT

PRIORITIZATION CATEGORIES

- ☒ Risk to Health, Safety and Environment
- ☒ Regulatory or Mandated Requirements
- ☒ Asset Condition, Annual Recurring Costs, and Asset Longevity
- ☐ Community Investment and Economic Prosperity
- ☐ Level and Quality of Service
- ☒ Sustainability and Conservation
- ☐ Funding Availability
- ☐ Project Readiness
- ☒ Multiple Category Benefit and Bundling Opportunities

NEW OR EXISTING

- ☐ New Infrastructure or Facility
- ☒ Existing Infrastructure or Facility

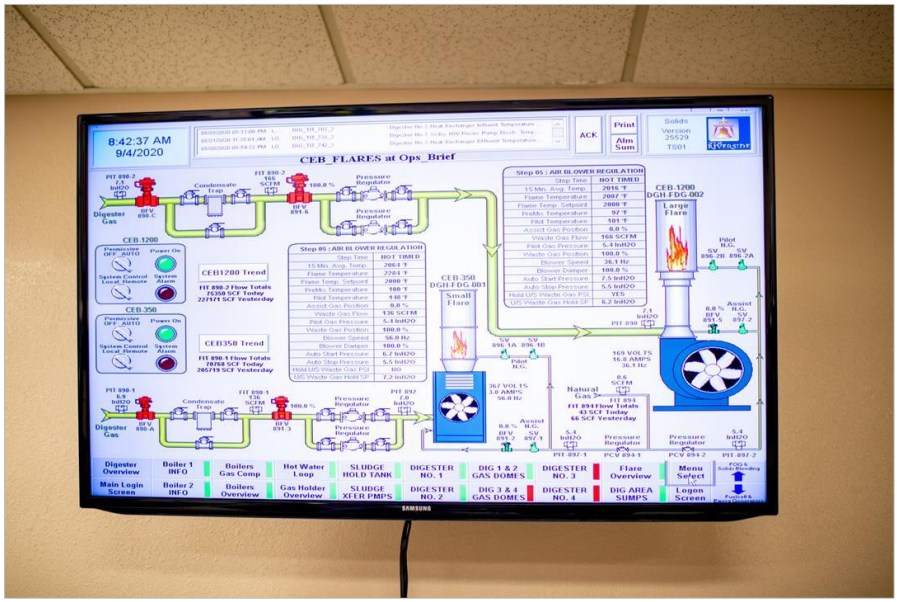

PROJECT NUMBER 9127 **COUNCIL WARD** All Wards
PROJECT CATEGORY Sewer
PROJECT LOCATION 5950 Acorn Street, Water Quality Control Plant

PROJECT DESCRIPTION
This project is to replace the current Supervisory Control and Data Acquisition (SCADA) system which is at the end of its useful life. The SCADA system is a control system architecture comprised of computers, networked data communications, and graphical user interfaces (GUI) for high-level process supervisory management, while also comprising other peripheral devices like programmable logic controllers (PLC). The SCADA system is used to monitor and control equipment within the plant and outside sewer lift stations throughout the City.

PROJECT STATUS
A scoping study has been prepared to prioritize and layout the capital cost and timeline of the implementation phase. Phase II will continue the installation of any non-critical upgrades to be completed in Fall 2030.

OPERATING BUDGET IMPACT
This is a rehabilitation of existing infrastructure and will not require additional operational or maintenance costs.

PROJECT FUNDING OVERVIEW			
Total Project Cost	Prior Years Funding	Five-Year Plan	Remaining Needed
$ 1,200,000	$ 250,000	$ -	$ 950,000

TWO-YEAR BUDGET AND FIVE-YEAR PLAN						
Funding Source	FY 2026/27	FY 2027/28	FY 2028/29	FY 2029/30	FY 2030/31	Total
N/A	$ -	$ -	$ -	$ -	$ -	$ -
Total Funding	**$ -**	**$ -**	**$ -**	**$ -**	**$ -**	**$ -**

WATER QUALITY CONTROL PLANT - SECURITY UPGRADES PHASE III

PRIORITIZATION CATEGORIES

- ☒ Risk to Health, Safety and Environment
- ☐ Regulatory or Mandated Requirements
- ☒ Asset Condition, Annual Recurring Costs, and Asset Longevity
- ☒ Community Investment and Economic Prosperity
- ☒ Level and Quality of Service
- ☒ Sustainability and Conservation
- ☐ Funding Availability
- ☐ Project Readiness
- ☒ Multiple Category Benefit and Bundling Opportunities

NEW OR EXISTING

- ☐ New Infrastructure or Facility
- ☒ Existing Infrastructure or Facility

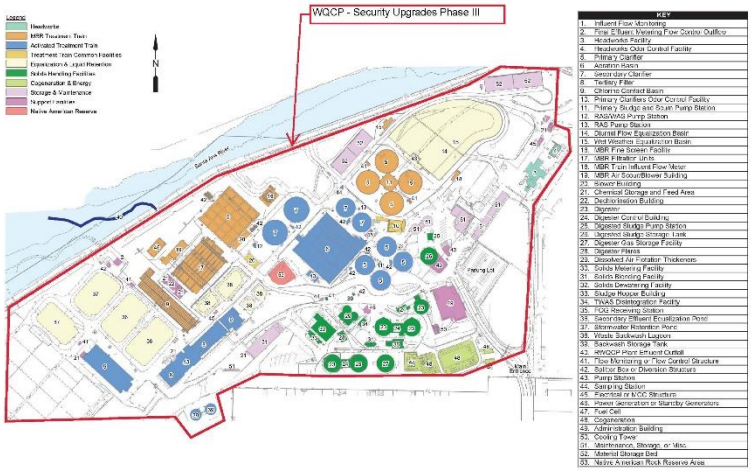

PROJECT NUMBER 9221 **COUNCIL WARD** All Wards
PROJECT CATEGORY Sewer
PROJECT LOCATION 5950 Acorn Street, Water Quality Control Plant

PROJECT DESCRIPTION
This project will install the high-priority recommendation of the Water Quality Control Plant (WQCP) Security Assessment Study. Recommendations included: additional surveillance cameras, mast pole lighting, perimeter lighting along the west boundary fence line, network servers and digital storage, existing video software upgrades, alarms, motion detectors, fencing and a new door locking system within all buildings in the Plant.

PROJECT STATUS
The project is on hold pending funding availability with design estimated to start Spring 2027. Currently, the RWQCP is using a temporary surveillance system on an interim basis.

OPERATING BUDGET IMPACT
This is a rehabilitation of existing infrastructure and will not require additional operational or maintenance costs.

PROJECT FUNDING OVERVIEW			
Total Project Cost	**Prior Years Funding**	**Five-Year Plan**	**Remaining Needed**
$ 3,000,000	**$ 732,409**	**$ 1,000,000**	**$ 1,267,591**

TWO-YEAR BUDGET AND FIVE-YEAR PLAN						
Funding Source	**FY 2026/27**	**FY 2027/28**	**FY 2028/29**	**FY 2029/30**	**FY 2030/31**	**Total**
550 - Sewer Fund	$ 200,000	$ 200,000	$ 200,000	$ 200,000	$ 200,000	$ 1,000,000
Total Funding	**$ 200,000**	**$ 200,000**	**$ 200,000**	**$ 200,000**	**$ 200,000**	**$ 1,000,000**

WATER QUALITY CONTROL PLANT - SOLAR SHADE STRUCTURES

PRIORITIZATION CATEGORIES

- ☐ Risk to Health, Safety and Environment
- ☐ Regulatory or Mandated Requirements
- ☐ Asset Condition, Annual Recurring Costs, and Asset Longevity
- ☒ Community Investment and Economic Prosperity
- ☐ Level and Quality of Service
- ☒ Sustainability and Conservation
- ☒ Funding Availability
- ☐ Project Readiness
- ☐ Multiple Category Benefit and Bundling Opportunities

NEW OR EXISTING

- ☒ New Infrastructure or Facility
- ☐ Existing Infrastructure or Facility

PROJECT LAYOUT



PROJECT NUMBER 9909 **COUNCIL WARD** 3
PROJECT CATEGORY Sewer
PROJECT LOCATION 5950 Acorn Street, Water Quality Control Plant

PROJECT DESCRIPTION
The Solar Panel Carport Project at the Riverside Water Quality Control Plant is intended to generate clean, renewable energy while reducing the City's greenhouse gas carbon footprint and lowering monthly electricity costs. The proposed system is expected to generate approximately 1 gigawatt-hour (GWh) of power annually and will be installed over roughly 100 parking spaces through a solar panel carport structure. In addition to producing renewable energy, the system will provide covered parking while supporting the City's long-term sustainability goals. The solar panel system is anticipated to have an estimated service life of approximately 20 years, demonstrating strong long-term value and return on investment for the city.

PROJECT STATUS
The project is currently in the procurement phase, with staff actively identifying and securing potential financial funding sources to support the project prior to moving forward with construction. The overall project timeline is expected to progress through four primary milestones: procurement, design, bidding, and construction, which together will guide the project from its current planning stage through final installation and operation. Estimated completion date for the project is December 2026.

OPERATING BUDGET IMPACT
This project is not anticipated to require additional operational or maintenance costs.

PROJECT FUNDING OVERVIEW

Total Project Cost	Prior Years Funding	Five-Year Plan	Remaining Needed
$ 7,192,266	$ 7,192,266	$ -	$ -

TWO-YEAR BUDGET AND FIVE-YEAR PLAN

Funding Source	FY 2026/27	FY 2027/28	FY 2028/29	FY 2029/30	FY 2030/31	Total
N/A	$ -	$ -	$ -	$ -	$ -	$ -
Total Funding	**$ -**	**$ -**	**$ -**	**$ -**	**$ -**	**$ -**

WATER QUALITY CONTROL PLANT - STORAGE SHEDS - JURUPA

PRIORITIZATION CATEGORIES

- ☒ Risk to Health, Safety and Environment
- ☒ Regulatory or Mandated Requirements
- ☒ Asset Condition, Annual Recurring Costs, and Asset Longevity
- ☒ Community Investment and Economic Prosperity
- ☒ Level and Quality of Service
- ☒ Sustainability and Conservation
- ☒ Funding Availability
- ☒ Project Readiness
- ☐ Multiple Category Benefit and Bundling Opportunities

NEW OR EXISTING

- ☒ New Infrastructure or Facility
- ☐ Existing Infrastructure or Facility



PROJECT NUMBER 9910 **COUNCIL WARD** All Wards
PROJECT CATEGORY Sewer
PROJECT LOCATION 5950 Acorn Street, Water Quality Control Plant

PROJECT DESCRIPTION
This project provides for the design and construction of one new storage building at the Riverside Water Quality Control Plant. The facility will be a prefabricated metal building constructed on a concrete foundation, providing a durable and cost-effective solution. It will offer secure, weather-protected storage for critical spare parts, specialized equipment, and essential materials. This protects assets from environmental exposure, improves inventory management, and ensures materials are readily available for routine maintenance and emergency repairs, improving maintenance response times and supporting overall plant reliability and operational efficiency. The anticipated service life of the new storage building is a minimum of 20 years.

PROJECT STATUS
This project is on hold pending funding availability. Estimated completion date is Winter 2028.

OPERATING BUDGET IMPACT
Upon completion, there will be no impact to the operating budget.

PROJECT FUNDING OVERVIEW

Total Project Cost	Prior Years Funding	Five-Year Plan	Remaining Needed
$ 2,000,000	$ 2,397	$ -	$ 1,997,603

TWO-YEAR BUDGET AND FIVE-YEAR PLAN

Funding Source	FY 2026/27	FY 2027/28	FY 2028/29	FY 2029/30	FY 2030/31	Total
N/A	$ -	$ -	$ -	$ -	$ -	$ -
Total Funding	**$ -**	**$ -**	**$ -**	**$ -**	**$ -**	**$ -**

WATER QUALITY CONTROL PLANT - SWITCHGEAR REPLACEMENT

PRIORITIZATION CATEGORIES

- ☒ Risk to Health, Safety and Environment
- ☒ Regulatory or Mandated Requirements
- ☐ Asset Condition, Annual Recurring Costs, and Asset Longevity
- ☐ Community Investment and Economic Prosperity
- ☐ Level and Quality of Service
- ☐ Sustainability and Conservation
- ☐ Funding Availability
- ☐ Project Readiness
- ☒ Multiple Category Benefit and Bundling Opportunities

NEW OR EXISTING

- ☐ New Infrastructure or Facility
- ☒ Existing Infrastructure or Facility



PROJECT NUMBER 9126 **COUNCIL WARD** All Wards
PROJECT CATEGORY Sewer
PROJECT LOCATION 5950 Acorn Street, Water Quality Control Plant

PROJECT DESCRIPTION
This project involves the planning and design for the physical replacement of the plant's existing switchgear, which functions as a key communication and control component within the facility's power structure. The existing equipment is past its service life, has become increasingly unreliable, and presents a potential risk to plant operations. Replacing the switchgear will improve the reliability and stability of power services and ensure safe and efficient electrical distribution throughout the facility. The new switchgear will serve as the primary communication tool within the electrical system, supporting the overall power structure and ensuring proper coordination of electrical components. With proper maintenance, the new equipment is expected to have an estimated service life of approximately 25 years, providing long-term reliability and value while supporting continued plant operations.

PROJECT STATUS
The assessment study is completed. Design is underway with anticipated completion in Spring 2028.

OPERATING BUDGET IMPACT
This is a rehabilitation of existing infrastructure and will not require additional operational or maintenance costs.

PROJECT FUNDING OVERVIEW			
Total Project Cost	Prior Years Funding	Five-Year Plan	Remaining Needed
$ 1,200,000	$ 500,000	$ -	$ 700,000

TWO-YEAR BUDGET AND FIVE-YEAR PLAN						
Funding Source	FY 2026/27	FY 2027/28	FY 2028/29	FY 2029/30	FY 2030/31	Total
N/A	$ -	$ -	$ -	$ -	$ -	$ -
Total Funding	**$ -**	**$ -**	**$ -**	**$ -**	**$ -**	**$ -**

WATER QUALITY CONTROL PLANT - UPGRADE FLOW METERS TO ELECTROMAGENTIC METERS

PRIORITIZATION CATEGORIES

- ☐ Risk to Health, Safety and Environment
- ☒ Regulatory or Mandated Requirements
- ☐ Asset Condition, Annual Recurring Costs, and Asset Longevity
- ☒ Community Investment and Economic Prosperity
- ☐ Level and Quality of Service
- ☒ Sustainability and Conservation
- ☐ Funding Availability
- ☐ Project Readiness
- ☒ Multiple Category Benefit and Bundling Opportunities

NEW OR EXISTING

- ☒ New Infrastructure or Facility
- ☒ Existing Infrastructure or Facility



PROJECT NUMBER 9116 **COUNCIL WARD** All Wards
PROJECT CATEGORY Sewer
PROJECT LOCATION 5950 Acorn Street, Water Quality Control Plant

PROJECT DESCRIPTION
This project is for the replacement of Flo-Dar flowmeters in the Acorn, Arlanza, and Santa Ana sewer lines with three electromagnetic flowmeters. A 16-inch diameter mag meter will be installed in the Acorn sewer line; a 36-inch diameter mag meter will be installed in the Arlanza sewer line, and a 36-inch mag meter will be installed in the Santa Ana sewer line.

PROJECT STATUS
Design is completed. Pending additional funding for construction as cost has increased. Estimated completion date is Winter 2027.

OPERATING BUDGET IMPACT
There will be no operating impact as this project will require minimal upkeep and will be absorbed into the current maintenance budget.

PROJECT FUNDING OVERVIEW

Total Project Cost	Prior Years Funding	Five-Year Plan	Remaining Needed
$ 14,580,838	$ 5,180,838	$ 9,400,000	$ -

TWO-YEAR BUDGET AND FIVE-YEAR PLAN

Funding Source	FY 2026/27	FY 2027/28	FY 2028/29	FY 2029/30	FY 2030/31	Total
550 - Sewer Fund	$ -	$ 3,400,000	$ 6,000,000	$ -	$ -	$ 9,400,000
Total Funding	**$ -**	**$ 3,400,000**	**$ 6,000,000**	**$ -**	**$ -**	**$ 9,400,000**

WATER QUALITY CONTROL PLANT - WAREHOUSE BUILDING REPLACEMENT

PRIORITIZATION CATEGORIES

- ☒ Risk to Health, Safety and Environment
- ☐ Regulatory or Mandated Requirements
- ☒ Asset Condition, Annual Recurring Costs, and Asset Longevity
- ☒ Community Investment and Economic Prosperity
- ☒ Level and Quality of Service
- ☒ Sustainability and Conservation
- ☐ Funding Availability
- ☐ Project Readiness
- ☒ Multiple Category Benefit and Bundling Opportunities

NEW OR EXISTING

- ☒ New Infrastructure or Facility
- ☐ Existing Infrastructure or Facility



PROJECT NUMBER 9123 **COUNCIL WARD** All Wards
PROJECT CATEGORY Sewer
PROJECT LOCATION 5950 Acorn Street, Water Quality Control Plant

PROJECT DESCRIPTION
This project is for Warehouse and Storage Building Replacement. Currently, the Water Quality Control Plant (WQCP) is using two old concrete digesters that were built in the 1940s that were converted to a warehouse more than thirty years ago. Also, there exists no storage cover to protect the WQCP and Collection System portable pumps, generators, equipment, and materials, and they are susceptible to outside elements. The WQCP and Collections Section will need a combined warehouse and storage facility.

PROJECT STATUS
The project is currently in the Planning phase, with activities focused on planning and scoping the project requirements. At this time, efforts are also directed toward securing the necessary funding to allow the project to move forward. Once funding is secured, the project is expected to follow four primary milestones: procurement, design, bid, and construction. The estimated project completion timeline will depend on funding availability; however, the project is anticipated to be completed within the standard project delivery timeframe after funding is approved and secured.

OPERATING BUDGET IMPACT
There will be no operating impact as this project will require minimal upkeep and will be absorbed into the current maintenance budget.

PROJECT FUNDING OVERVIEW

Total Project Cost	Prior Years Funding	Five-Year Plan	Remaining Needed
$ 1,650,000	$ 100,000	$ -	$ 1,550,000

TWO-YEAR BUDGET AND FIVE-YEAR PLAN

Funding Source	FY 2026/27	FY 2027/28	FY 2028/29	FY 2029/30	FY 2030/31	Total
N/A	$ -	$ -	$ -	$ -	$ -	$ -
Total Funding	**$ -**	**$ -**	**$ -**	**$ -**	**$ -**	**$ -**

WATER QUALITY CONTROL PLANT - WI-FI PHASE III

PRIORITIZATION CATEGORIES

- ☐ Risk to Health, Safety and Environment
- ☐ Regulatory or Mandated Requirements
- ☒ Asset Condition, Annual Recurring Costs, and Asset Longevity
- ☒ Community Investment and Economic Prosperity
- ☒ Level and Quality of Service
- ☒ Sustainability and Conservation
- ☐ Funding Availability
- ☐ Project Readiness
- ☒ Multiple Category Benefit and Bundling Opportunities

NEW OR EXISTING

- ☐ New Infrastructure or Facility
- ☒ Existing Infrastructure or Facility



PROJECT NUMBER 9224 **COUNCIL WARD** All Wards
PROJECT CATEGORY Sewer
PROJECT LOCATION 5950 Acorn Street, Water Quality Control Plant

PROJECT DESCRIPTION
Currently, Wi-Fi is only supplied to the interior of the Plant administration buildings. Phase III will combine Wi-Fi Phase II which will cover all of the open areas and process buildings within the Plant. Included in the equipment will be Access Points, fiber and CAT6 communication cabling, switches, and power units. This project will support staff at the Plant and will lead into the 3D GIS Asset Management Project.

PROJECT STATUS
This project is on hold pending funding availability with design estimated to begin Spring 2027.

OPERATING BUDGET IMPACT
This is a rehabilitation of existing infrastructure and will not require additional operational or maintenance costs.

PROJECT FUNDING OVERVIEW

Total Project Cost	Prior Years Funding	Five-Year Plan	Remaining Needed
$ 1,620,000	$ 220,000	$ -	$ 1,400,000

TWO-YEAR BUDGET AND FIVE-YEAR PLAN

Funding Source	FY 2026/27	FY 2027/28	FY 2028/29	FY 2029/30	FY 2030/31	Total
N/A	$ -	$ -	$ -	$ -	$ -	$ -
Total Funding	**$ -**	**$ -**	**$ -**	**$ -**	**$ -**	**$ -**

WESTERN, MARTIN LUTHER KING, & GARDEN HILL LIFT STATION REHABILITATION

PRIORITIZATION CATEGORIES

- ☒ Risk to Health, Safety and Environment
- ☐ Regulatory or Mandated Requirements
- ☐ Asset Condition, Annual Recurring Costs, and Asset Longevity
- ☒ Community Investment and Economic Prosperity
- ☒ Level and Quality of Service
- ☐ Sustainability and Conservation
- ☐ Funding Availability
- ☐ Project Readiness
- ☒ Multiple Category Benefit and Bundling Opportunities

NEW OR EXISTING

- ☐ New Infrastructure or Facility
- ☒ Existing Infrastructure or Facility



PROJECT NUMBER 9101
PROJECT CATEGORY Sewer
PROJECT LOCATION Multiple
COUNCIL WARD 4, 7

PROJECT DESCRIPTION
The Western, and Garden Hill Lift Station Rehabilitation project involves the replacement of three sewer lift stations at the Water Quality Control Plant to address aging infrastructure that has exceeded its useful service life. The project scope includes the design and installation of entirely new stations, replacing all major components to ensure reliable operation. The new lift stations are expected to have a service life of approximately 20 years with proper maintenance, providing long-term value. This work is critical for regulatory compliance, reducing the risk of sanitary sewer overflows, and protecting public health and the environment by maintaining safe and efficient wastewater collection and conveyance.
The Martin Luther King sewer Lift Station will be abandoned at the end of 2026 due to a new sewer system being constructed.

PROJECT STATUS
Design started in 2024, with construction to start in Fall 2027. The project is expected to be completed by Fall 2028.

OPERATING BUDGET IMPACT
This is a rehabilitation of existing infrastructure and will not require additional operational or maintenance costs.

PROJECT FUNDING OVERVIEW

Total Project Cost	Prior Years Funding	Five-Year Plan	Remaining Needed
$ 7,000,000	$ 2,000,000	$ 5,000,000	$ -

TWO-YEAR BUDGET AND FIVE-YEAR PLAN

Funding Source	FY 2026/27	FY 2027/28	FY 2028/29	FY 2029/30	FY 2030/31	Total
550 - Sewer Fund	$ -	$ -	$ 2,500,000	$ 2,500,000	$ -	$ 5,000,000
Total Funding	**$ -**	**$ -**	**$ 2,500,000**	**$ 2,500,000**	**$ -**	**$ 5,000,000**

WOODCREST SEWER CONSTRUCTION - PHASE I

PRIORITIZATION CATEGORIES

- ☒ Risk to Health, Safety and Environment
- ☐ Regulatory or Mandated Requirements
- ☐ Asset Condition, Annual Recurring Costs, and Asset Longevity
- ☒ Community Investment and Economic Prosperity
- ☐ Level and Quality of Service
- ☒ Sustainability and Conservation
- ☐ Funding Availability
- ☐ Project Readiness
- ☒ Multiple Category Benefit and Bundling Opportunities

NEW OR EXISTING

- ☒ New Infrastructure or Facility
- ☒ Existing Infrastructure or Facility



PROJECT NUMBER 8969 **COUNCIL WARD** 4
PROJECT CATEGORY Sewer
PROJECT LOCATION Van Buren Boulevard from King Avenue to Wood Road

PROJECT DESCRIPTION
This project will construct of a new public sewer conveyance system designed to improve wastewater collection and transport capacity, including installation of approximately 2 miles of gravity sewer pipeline and 2 miles of double force main pipelines, plus the construction of a new sewer lift station to support the movement of wastewater through the system. The project will construct pipelines using polyvinyl chloride (PVC) piping due to its durability, corrosion resistance, and suitability for wastewater infrastructure. The new pipelines are designed with an expected service life of roughly 100 years, while the lift station is anticipated to have a service life of about 20 years with proper maintenance and equipment replacement cycles. This project is necessary to strengthen the reliability and efficiency of the City's sewer infrastructure, support long-term system capacity needs, and ensure continued compliance with regulatory requirements.

PROJECT STATUS
This project is currently under construction. The estimated completion date is December 2026.

OPERATING BUDGET IMPACT
Once the project is completed, the maintenance will be part of the Collection group's regularly scheduled cleaning tasks but will not add additional operating impacts.

PROJECT FUNDING OVERVIEW

Total Project Cost	Prior Years Funding	Five-Year Plan	Remaining Needed
$ 23,908,617	$ 23,908,617	$ -	$ -

TWO-YEAR BUDGET AND FIVE-YEAR PLAN

Funding Source	FY 2026/27	FY 2027/28	FY 2028/29	FY 2029/30	FY 2030/31	Total
N/A	$ -	$ -	$ -	$ -	$ -	$ -
Total Funding	**$ -**	**$ -**	**$ -**	**$ -**	**$ -**	**$ -**

This Page Intentionally Left Blank

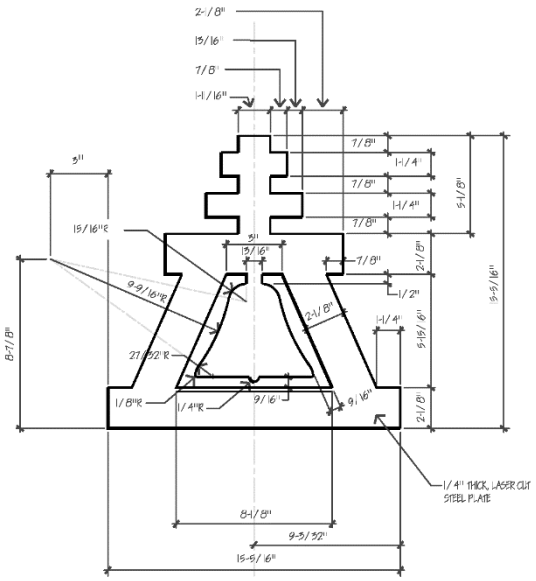



STORM DRAIN

CITY OF RIVERSIDE

PROJECT LOCATION MAP

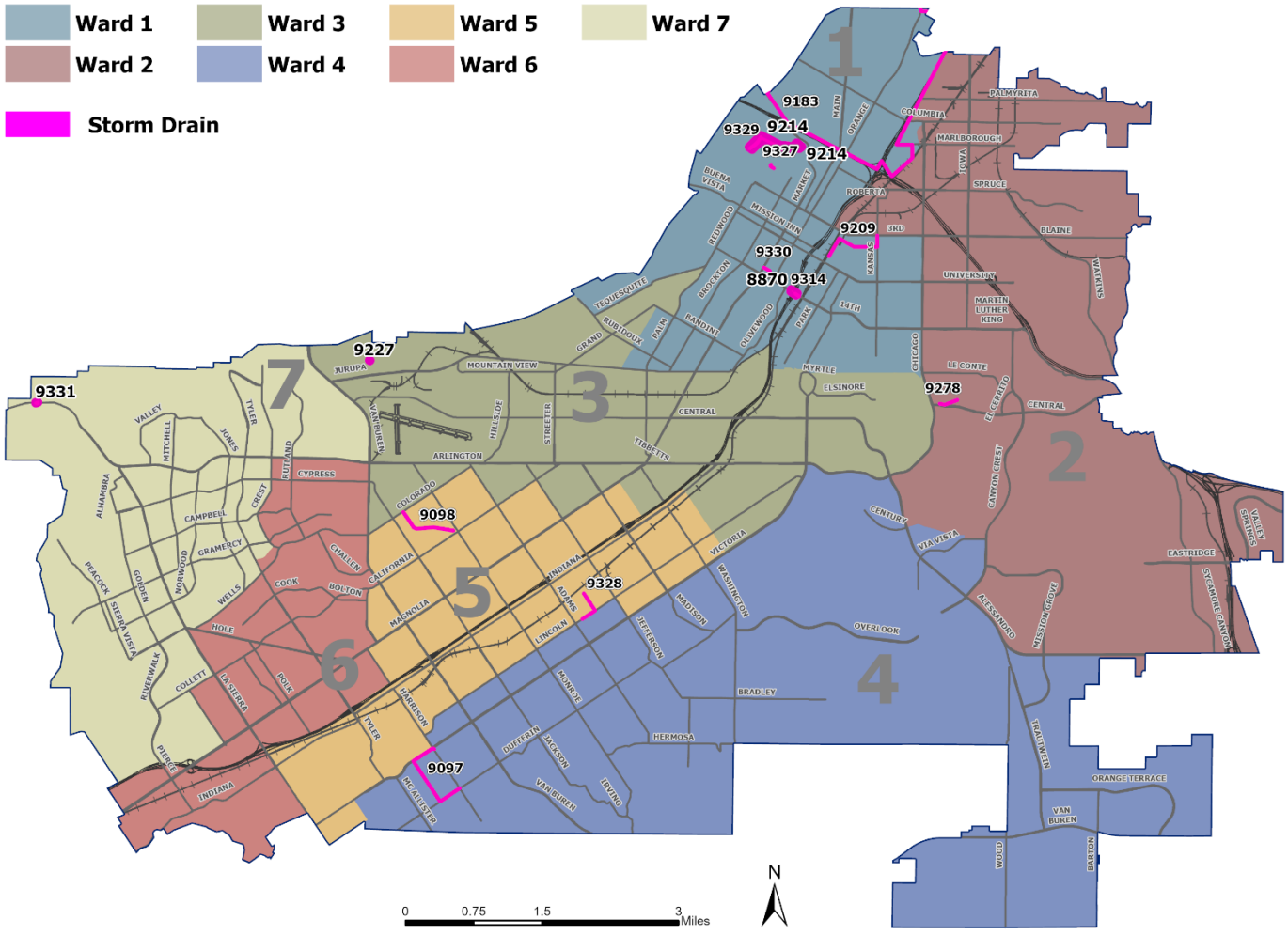

Note: This map includes all active and new capital projects. Ongoing and citywide projects are not included on the map. To view additional information and detailed maps, please visit the City's Budget Transparency Portal at https://Riverside.OpenBook.Questica.com.



This Page Intentionally Left Blank

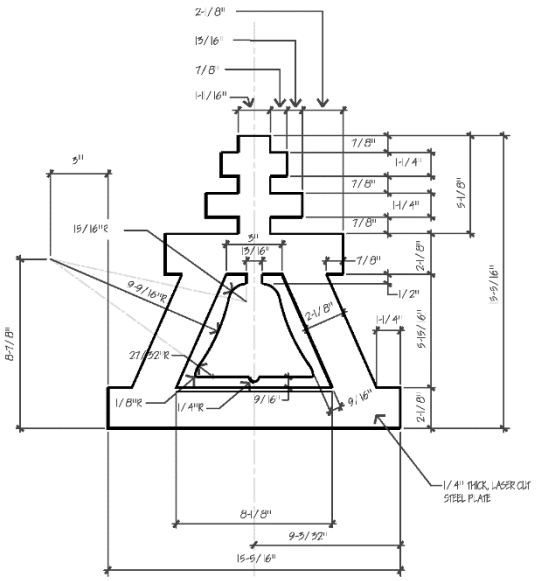

14TH STREET UNDERPASS STORM DRAIN

PRIORITIZATION CATEGORIES

- ☒ Risk to Health, Safety and Environment
- ☐ Regulatory or Mandated Requirements
- ☐ Asset Condition, Annual Recurring Costs, and Asset Longevity
- ☐ Community Investment and Economic Prosperity
- ☒ Level and Quality of Service
- ☒ Sustainability and Conservation
- ☐ Funding Availability
- ☐ Project Readiness
- ☒ Multiple Category Benefit and Bundling Opportunities

NEW OR EXISTING

- ☐ New Infrastructure or Facility
- ☒ Existing Infrastructure or Facility



PROJECT NUMBER 8870 **COUNCIL WARD** 1
PROJECT CATEGORY Storm Drain
PROJECT LOCATION 14th Street and Vine Street

PROJECT DESCRIPTION
This project proposes to modify the existing 14th Street underpass storm drain pump station and install an emergency portable pump in order to assist with the main pump system to alleviate stormwater inundation at the underpass during a storm event. The work includes the addition of a retaining wall, concrete flat work, driveway, curb, gutter, and underground piping. This project is needed to provide alleviation of flooding at the 14th street underpass, thus allowing traffic and emergency responses to use 14th street instead of diverting traffic around the area.

PROJECT STATUS
On August 19, 2025, the City Council accepted the 2025 Local Transportation Climate Adaptation Program (LTCAP) Cycle 2 grant, in the amount of $1,215,000, for the environmental and engineering design phases of the 14th Street Underpass Storm Water Pump Station Replacement. Currently, the project is on hold for design until the grant fund allows to release RFP for the design phase. Anticipated completion date is Summer 2026.

OPERATING BUDGET IMPACT
This is a rehabilitation of existing infrastructure and will not require additional operational or maintenance costs.

PROJECT FUNDING OVERVIEW			
Total Project Cost	Prior Years Funding	Five-Year Plan	Remaining Needed
$ 689,561	$ 339,955	$ -	$ 349,606

TWO-YEAR BUDGET AND FIVE-YEAR PLAN						
Funding Source	FY 2026/27	FY 2027/28	FY 2028/29	FY 2029/30	FY 2030/31	Total
N/A	$ -	$ -	$ -	$ -	$ -	$ -
Total Funding	**$ -**	**$ -**	**$ -**	**$ -**	**$ -**	**$ -**

ARLINGTON AVE STORM DRAIN PROJECT

PRIORITIZATION CATEGORIES

- ☒ Risk to Health, Safety and Environment
- ☐ Regulatory or Mandated Requirements
- ☐ Asset Condition, Annual Recurring Costs, and Asset Longevity
- ☒ Community Investment and Economic Prosperity
- ☒ Level and Quality of Service
- ☒ Sustainability and Conservation
- ☐ Funding Availability
- ☐ Project Readiness
- ☒ Multiple Category Benefit and Bundling Opportunities

NEW OR EXISTING

- ☐ New Infrastructure or Facility
- ☒ Existing Infrastructure or Facility



PROJECT NUMBER 9331 **COUNCIL WARD** 7
PROJECT CATEGORY Storm Drain
PROJECT LOCATION Arlington Ave Cross of Crestlawn Memorial Park Rd

PROJECT DESCRIPTION
This project involves the urgent repair and replacement of a broken storm drain line that is currently causing significant localized flooding. Engineering assessments have identified multiple damaged sections of the pipe that compromise the system's structural integrity and hydraulic capacity. Notably, the outlet portion of the line is currently buried, completely obstructing water flow and exacerbating flood risks to adjacent properties and public rights-of-way. By restoring the drainage path and replacing the failed pipe segments, this project directly mitigates the Risk to Health, Safety and Environment. These improvements are critical to restoring the City's basic level of service for stormwater management.

PROJECT STATUS
Project is currently in design phase and pending survey cost. Estimated completion date is Spring 2027.

OPERATING BUDGET IMPACT
This project will not have any operating budget impact.

PROJECT FUNDING OVERVIEW

Total Project Cost	Prior Years Funding	Five-Year Plan	Remaining Needed
$ 350,000	$ 50,000	$ -	$ -

TWO-YEAR BUDGET AND FIVE-YEAR PLAN

Funding Source	FY 2026/27	FY 2027/28	FY 2028/29	FY 2029/30	FY 2030/31	Total
230 - Special Gas Tax	$ 300,000	$ -	$ -	$ -	$ -	$ -
Total Funding	**$ 300,000**	**$ -**	**$ -**	**$ -**	**$ -**	**$ -**

CHICAGO & CENTRAL SLOPE REPAIR

PRIORITIZATION CATEGORIES

- ☒ Risk to Health, Safety and Environment
- ☐ Regulatory or Mandated Requirements
- ☒ Asset Condition, Annual Recurring Costs, and Asset Longevity
- ☒ Community Investment and Economic Prosperity
- ☒ Level and Quality of Service
- ☐ Sustainability and Conservation
- ☐ Funding Availability
- ☐ Project Readiness
- ☐ Multiple Category Benefit and Bundling Opportunities

NEW OR EXISTING

- ☒ New Infrastructure or Facility
- ☐ Existing Infrastructure or Facility



PROJECT NUMBER 9278 **COUNCIL WARD** 2
PROJECT CATEGORY Storm Drain
PROJECT LOCATION Central Avenue near the intersection of Chicago Avenue

PROJECT DESCRIPTION
This project will address erosion along Central Avenue near the intersection of Chicago Avenue by resolving drainage issues above the slope. The erosion was caused by the limited capacity of the inlet drain, which became overwhelmed during heavy rainfall, leading to water overflow, localized slope erosion, and mud accumulation on the sidewalk and roadway. Planned improvements include construction of approximately 300 linear feet of concrete channel, as well as slope restoration to prevent future erosion and maintain roadway safety.

PROJECT STATUS
The design phase was completed in January 2026. The project is currently moving into the procurement and bidding phase. Construction is anticipated to begin in Spring 2026, with final completion by Summer 2026.

OPERATING BUDGET IMPACT
There are no operating budget impacts expected once the project is complete. Any maintenance will be absorbed in the current budget.

PROJECT FUNDING OVERVIEW

Total Project Cost	Prior Years Funding	Five-Year Plan	Remaining Needed
$ 651,388	$ 651,388	$ -	$ -

TWO-YEAR BUDGET AND FIVE-YEAR PLAN

Funding Source	FY 2026/27	FY 2027/28	FY 2028/29	FY 2029/30	FY 2030/31	Total
N/A	$ -	$ -	$ -	$ -	$ -	$ -
Total Funding	**$ -**	**$ -**	**$ -**	**$ -**	**$ -**	**$ -**

FAIRMOUNT PARK STORM DRAIN

PRIORITIZATION CATEGORIES

- ☒ Risk to Health, Safety and Environment
- ☐ Regulatory or Mandated Requirements
- ☒ Asset Condition, Annual Recurring Costs, and Asset Longevity
- ☒ Community Investment and Economic Prosperity
- ☒ Level and Quality of Service
- ☐ Sustainability and Conservation
- ☐ Funding Availability
- ☐ Project Readiness
- ☐ Multiple Category Benefit and Bundling Opportunities

NEW OR EXISTING

- ☒ New Infrastructure or Facility
- ☒ Existing Infrastructure or Facility



PROJECT NUMBER 9329 **COUNCIL WARD** 1
PROJECT CATEGORY Storm Drain
PROJECT LOCATION Dexter Drive to Bowling Green Drive

PROJECT DESCRIPTION
This project involves the rehabilitation of an existing storm drain line within Fairmount Park to restore its hydraulic capacity and structural integrity. Currently, significant sediment accumulation is impacting the original design intent of the pipe, reducing its ability to manage stormwater runoff effectively. To address these deficiencies, the project will install a specialized lining within the existing reinforced concrete pipe (RCP). This "trenchless" rehabilitation method extends the useful life of the asset while minimizing surface disruption to the park's recreational areas and landscaping. These improvements ensure the drainage system functions as intended and reduces the Risk to Health, Safety and Environment.

PROJECT STATUS
The project design phase has been completed, and the bid was opened on 10/9/2025. City Council is set to award the project to the winning contractor on 12/16/2025 council date. Project is anticipated to begin in Spring 2026 and is estimated to reach final completion in Summer 2026.

OPERATING BUDGET IMPACT
Project does not anticipate additional operating and maintenance cost. Any additional operating cost will be absorbed in the existing budget.

PROJECT FUNDING OVERVIEW

Total Project Cost	Prior Years Funding	Five-Year Plan	Remaining Needed
$ 682,000	$ 189,417	$ 492,583	$ -

TWO-YEAR BUDGET AND FIVE-YEAR PLAN

Funding Source	FY 2026/27	FY 2027/28	FY 2028/29	FY 2029/30	FY 2030/31	Total
230 - Special Gas Tax	$ 492,583	$ -	$ -	$ -	$ -	$ 492,583
Total Funding	**$ 492,583**	**$ -**	**$ -**	**$ -**	**$ -**	**$ 492,583**

FAIRMOUNT PARK STORM DRAIN REHABILITATION

PRIORITIZATION CATEGORIES

- ☒ Risk to Health, Safety and Environment
- ☐ Regulatory or Mandated Requirements
- ☐ Asset Condition, Annual Recurring Costs, and Asset Longevity
- ☐ Community Investment and Economic Prosperity
- ☐ Level and Quality of Service
- ☒ Sustainability and Conservation
- ☐ Funding Availability
- ☐ Project Readiness
- ☒ Multiple Category Benefit and Bundling Opportunities

NEW OR EXISTING

- ☐ New Infrastructure or Facility
- ☒ Existing Infrastructure or Facility



PROJECT NUMBER 9214 **COUNCIL WARD** 1
PROJECT CATEGORY Storm Drain
PROJECT LOCATION 2601 Fairmount Boulevard

PROJECT DESCRIPTION
This project will allow the lining of 36" diameter ring connector pipe, including heavy cleaning of the drainage pipe. The project will increase the carrying capacity of the pipe and will also strengthen the structure of the pipe without replacing the new pipe.

PROJECT STATUS
The project is scheduled to go before the City Council on 12/6/2025 for construction, with completion anticipated in Winter 2026.

OPERATING BUDGET IMPACT
This is a rehabilitation of existing infrastructure and will not require additional operational or maintenance costs.

PROJECT FUNDING OVERVIEW

Total Project Cost	Prior Years Funding	Five-Year Plan	Remaining Needed
$ 500,000	$ 500,000	$ -	$ -

TWO-YEAR BUDGET AND FIVE-YEAR PLAN

Funding Source	FY 2026/27	FY 2027/28	FY 2028/29	FY 2029/30	FY 2030/31	Total
N/A	$ -	$ -	$ -	$ -	$ -	$ -
Total Funding	**$ -**	**$ -**	**$ -**	**$ -**	**$ -**	**$ -**

FOURTEENTH STREET UNDERPASS PUMP STATION PROJECT

PRIORITIZATION CATEGORIES

- ☒ Risk to Health, Safety and Environment
- ☐ Regulatory or Mandated Requirements
- ☐ Asset Condition, Annual Recurring Costs, and Asset Longevity
- ☒ Community Investment and Economic Prosperity
- ☒ Level and Quality of Service
- ☒ Sustainability and Conservation
- ☐ Funding Availability
- ☐ Project Readiness
- ☒ Multiple Category Benefit and Bundling Opportunities

NEW OR EXISTING

- ☒ New Infrastructure or Facility
- ☒ Existing Infrastructure or Facility



PROJECT NUMBER 9314 **COUNCIL WARD** 1
PROJECT CATEGORY Storm Drain
PROJECT LOCATION Fourteenth Street at 91 Freeway Underpass

PROJECT DESCRIPTION
This project involves the installation of a new pump station at the 14th Street underpass to mitigate flooding concerns during significant rain events. The scope includes the demolition of the existing, obsolete pump station and the construction of a modern replacement designed to handle a 100-year storm event. These improvements are critical for maintaining safe passage for vehicles and pedestrians while minimizing the Risk to Health, Safety and Environment associated with roadway inundation. By addressing an infrastructure deficit identified in community safety plans, the project enhances the overall reliability of the City's drainage system and protects adjacent property from flood damage.

PROJECT STATUS
The City has secured design funding and is hiring a consultant. Design is tentatively set to begin in Winter 2026. While construction funding is still being pursued, project completion is estimated for December 2030.

OPERATING BUDGET IMPACT
Operating budget impacts will be evaluated closer to project completion.

PROJECT FUNDING OVERVIEW			
Total Project Cost	Prior Years Funding	Five-Year Plan	Remaining Needed
$ 349,606	$ 349,606	$ -	$ -

TWO-YEAR BUDGET AND FIVE-YEAR PLAN						
Funding Source	FY 2026/27	FY 2027/28	FY 2028/29	FY 2029/30	FY 2030/31	Total
N/A	$ -	$ -	$ -	$ -	$ -	$ -
Total Funding	**$ -**	**$ -**	**$ -**	**$ -**	**$ -**	**$ -**

HOUGHTON AVENUE STORM DRAIN IMPROVEMENTS

PRIORITIZATION CATEGORIES

- ☒ Risk to Health, Safety and Environment
- ☐ Regulatory or Mandated Requirements
- ☐ Asset Condition, Annual Recurring Costs, and Asset Longevity
- ☒ Community Investment and Economic Prosperity
- ☒ Level and Quality of Service
- ☒ Sustainability and Conservation
- ☐ Funding Availability
- ☐ Project Readiness
- ☒ Multiple Category Benefit and Bundling Opportunities

NEW OR EXISTING

- ☒ New Infrastructure or Facility
- ☐ Existing Infrastructure or Facility



PROJECT NUMBER 9327 **COUNCIL WARD** 1
PROJECT CATEGORY Storm Drain
PROJECT LOCATION Houghton Avenue and Pine Street

PROJECT DESCRIPTION
This project involves the rehabilitation of an existing storm drain line within Fairmount Park to restore its hydraulic capacity and structural integrity. Currently, significant sediment accumulation is impacting the original design intent of the pipe, reducing its ability to manage stormwater runoff effectively. To address these deficiencies, the project will install a specialized lining within the existing reinforced concrete pipe (RCP). This "trenchless" rehabilitation method extends the useful life of the asset while minimizing surface disruption to the park's recreational areas and landscaping. These improvements ensure the drainage system functions as intended and reduces the Risk to Health, Safety and Environment.

PROJECT STATUS
Design is complete and the bid opened on 9/18/2025. Council awarded the contract on 12/2/2025. The project is ready construction to begin in Spring 2026 with final completion and pump removal estimated for Summer 2026.

OPERATING BUDGET IMPACT
Project does not anticipate additional operating and maintenance cost. Any additional operating cost will be absorbed in the existing budget.

PROJECT FUNDING OVERVIEW

Total Project Cost	Prior Years Funding	Five-Year Plan	Remaining Needed
$ 315,000	$ 315,000	$ -	$ -

TWO-YEAR BUDGET AND FIVE-YEAR PLAN

Funding Source	FY 2026/27	FY 2027/28	FY 2028/29	FY 2029/30	FY 2030/31	Total
N/A	$ -	$ -	$ -	$ -	$ -	$ -
Total Funding	**$ -**	**$ -**	**$ -**	**$ -**	**$ -**	**$ -**

LINCOLN STREET STORM DRAIN PROJECT

PRIORITIZATION CATEGORIES

- ☒ Risk to Health, Safety and Environment
- ☐ Regulatory or Mandated Requirements
- ☐ Asset Condition, Annual Recurring Costs, and Asset Longevity
- ☒ Community Investment and Economic Prosperity
- ☒ Level and Quality of Service
- ☒ Sustainability and Conservation
- ☐ Funding Availability
- ☐ Project Readiness
- ☒ Multiple Category Benefit and Bundling Opportunities

NEW OR EXISTING

- ☒ New Infrastructure or Facility
- ☒ Existing Infrastructure or Facility



PROJECT NUMBER 9328 **COUNCIL WARD** 5
PROJECT CATEGORY Storm Drain
PROJECT LOCATION Intersection of St. Lawrence Street and Lincoln Avenue

PROJECT DESCRIPTION
This project focuses on the installation and rehabilitation of critical storm drain infrastructure to address areas with inadequate drainage capacity. Localized flooding has become a significant concern in these underserved locations, and new infrastructure—including reinforced concrete pipes and catch basins—is being developed to minimize flood risks to property and public safety. By providing additional flood protection and eliminating nuisance flows, the project directly addresses the Risk to Health, Safety and Environment prioritization category. These improvements ensure the City's drainage system meets modern level-of-service standards and enhances regional resiliency against large rain events.

PROJECT STATUS
The project is currently pending design survey information to proceed with design. The cost estimate for the project will then be generated. Project design is tentatively anticipated to begin in Summer 2026 and is estimated to reach final completion in Winter 2028.

OPERATING BUDGET IMPACT
Operating budget impacts will be evaluated closer to project completion.

PROJECT FUNDING OVERVIEW

Total Project Cost	Prior Years Funding	Five-Year Plan	Remaining Needed
$ 900,000	$ 70,000	$ 830,000	$ -

TWO-YEAR BUDGET AND FIVE-YEAR PLAN

Funding Source	FY 2026/27	FY 2027/28	FY 2028/29	FY 2029/30	FY 2030/31	Total
230 - Special Gas Tax	$ 415,000	$ 415,000	$ -	$ -	$ -	$ 830,000
Total Funding	**$ 415,000**	**$ 415,000**	**$ -**	**$ -**	**$ -**	**$ 830,000**

MASTER DRAINAGE PLAN – LINE D STORM DRAIN

PRIORITIZATION CATEGORIES

- ☒ Risk to Health, Safety and Environment
- ☐ Regulatory or Mandated Requirements
- ☒ Asset Condition, Annual Recurring Costs, and Asset Longevity
- ☒ Community Investment and Economic Prosperity
- ☐ Level and Quality of Service
- ☒ Sustainability and Conservation
- ☐ Funding Availability
- ☐ Project Readiness
- ☒ Multiple Category Benefit and Bundling Opportunities

NEW OR EXISTING

- ☒ New Infrastructure or Facility
- ☐ Existing Infrastructure or Facility



PROJECT NUMBER 9209 **COUNCIL WARD** 1
PROJECT CATEGORY Storm Drain
PROJECT LOCATION Intersection of Mission Inn Avenue/Commerce Street to Intersection 3rd Street/Kansas Avenue

PROJECT DESCRIPTION
This project will construct approximately 4,150 linear feet of new 60" and 78" storm drainpipes from the intersection of 3rd Street and Kansas Streets to 4th Street, and west on 4th Street to Commerce Street and south on Commerce Street to Mission Inn Avenue.

PROJECT STATUS
On October 21, 2025, the project was awarded by the City Council. Construction is anticipated to begin in Winter 2025 with a project completion date of Summer 2027.

OPERATING BUDGET IMPACT
Due to the size of the storm drainpipes, this will fall under the maintenance of the Riverside County Flood Control and will not impact the City's budget.

PROJECT FUNDING OVERVIEW

Total Project Cost	Prior Years Funding	Five-Year Plan	Remaining Needed
$ 8,669,056	$ 8,669,056	$ -	$ -

TWO-YEAR BUDGET AND FIVE-YEAR PLAN

Funding Source	FY 2026/27	FY 2027/28	FY 2028/29	FY 2029/30	FY 2030/31	Total
N/A	$ -	$ -	$ -	$ -	$ -	$ -
Total Funding	**$ -**	**$ -**	**$ -**	**$ -**	**$ -**	**$ -**

MASTER DRAINAGE PLAN – LINE E1 STORM DRAIN

PRIORITIZATION CATEGORIES

- ☐ Risk to Health, Safety and Environment
- ☐ Regulatory or Mandated Requirements
- ☐ Asset Condition, Annual Recurring Costs, and Asset Longevity
- ☐ Community Investment and Economic Prosperity
- ☒ Level and Quality of Service
- ☒ Sustainability and Conservation
- ☐ Funding Availability
- ☐ Project Readiness
- ☒ Multiple Category Benefit and Bundling Opportunities

NEW OR EXISTING

- ☒ New Infrastructure or Facility
- ☐ Existing Infrastructure or Facility



PROJECT NUMBER 9097 **COUNCIL WARD** 4
PROJECT CATEGORY Storm Drain
PROJECT LOCATION John Street from Dufferin Avenue to Victoria Avenue

PROJECT DESCRIPTION
This project will construct approximately 4,200 linear feet of new storm drainpipes between John Street and Harrison Street on Dufferin Avenue, heading west to John Street. The line would then head north on John Street to Victoria Avenue, then head east to connect to the existing City storm drain. The Reinforced concrete pipe diameter size varies from 18-inches to 78-inches.

PROJECT STATUS
The project is currently moving forward through in-house design by City staff. A pothole contractor has been hired and the project is expected to be completed Winter 2028.

OPERATING BUDGET IMPACT
There will be some costs associated with maintenance that will be shared with Riverside County. As the project nears construction in 2027, the City will quantify the cost to service these storm drains. Any costs shared with Riverside County will impact the budget in 2028/29.

PROJECT FUNDING OVERVIEW

Total Project Cost	Prior Years Funding	Five-Year Plan	Remaining Needed
$ 5,485,573	$ 5,485,573	$ -	$ -

TWO-YEAR BUDGET AND FIVE-YEAR PLAN

Funding Source	FY 2026/27	FY 2027/28	FY 2028/29	FY 2029/30	FY 2030/31	Total
N/A	$ -	$ -	$ -	$ -	$ -	$ -
Total Funding	**$ -**	**$ -**	**$ -**	**$ -**	**$ -**	**$ -**

MASTER DRAINAGE PLAN - MONROE CHANNEL STAGE 5 STORM DRAIN

PRIORITIZATION CATEGORIES

- ☒ Risk to Health, Safety and Environment
- ☐ Regulatory or Mandated Requirements
- ☐ Asset Condition, Annual Recurring Costs, and Asset Longevity
- ☒ Community Investment and Economic Prosperity
- ☐ Level and Quality of Service
- ☒ Sustainability and Conservation
- ☐ Funding Availability
- ☐ Project Readiness
- ☒ Multiple Category Benefit and Bundling Opportunities

NEW OR EXISTING

- ☒ New Infrastructure or Facility
- ☐ Existing Infrastructure or Facility



PROJECT NUMBER 9098 **COUNCIL WARD** 5
PROJECT CATEGORY Storm Drain
PROJECT LOCATION Monticello Avenue from California Avenue to Colorado Avenue

PROJECT DESCRIPTION
The project will remove approximately 3,400 linear feet of the existing concrete-lined channel along Monticello Avenue between California Avenue and Colorado Avenue and replace it with an underground concrete box. The project will install new planting, drip irrigation, and a decorative pathway over the storm drain box as a separate City project.

PROJECT STATUS
The project is moving forward with the removal of the existing concrete-lined channel along Monticello Avenue between California Avenue and Colorado Avenue and replace it with an underground concrete box. The Consultant has been hired and is currently under the design phase with the project estimated to be completed in Winter 2028.

OPERATING BUDGET IMPACT
All funding is provided by Riverside County Flood Control District. There is no operating impact as the project, once completed, will be maintained by the Riverside County Flood Control.

PROJECT FUNDING OVERVIEW

Total Project Cost	Prior Years Funding	Five-Year Plan	Remaining Needed
$ 13,800,195	$ 13,800,195	$ -	$ -

TWO-YEAR BUDGET AND FIVE-YEAR PLAN

Funding Source	FY 2026/27	FY 2027/28	FY 2028/29	FY 2029/30	FY 2030/31	Total
N/A	$ -	$ -	$ -	$ -	$ -	$ -
Total Funding	**$ -**	**$ -**	**$ -**	**$ -**	**$ -**	**$ -**

MISCELLANEOUS STORM DRAIN CONSTRUCTION

PRIORITIZATION CATEGORIES

- ☒ Risk to Health, Safety and Environment
- ☒ Regulatory or Mandated Requirements
- ☒ Asset Condition, Annual Recurring Costs, and Asset Longevity
- ☐ Community Investment and Economic Prosperity
- ☒ Level and Quality of Service
- ☒ Sustainability and Conservation
- ☒ Funding Availability
- ☒ Project Readiness
- ☒ Multiple Category Benefit and Bundling Opportunities

NEW OR EXISTING

- ☒ New Infrastructure or Facility
- ☒ Existing Infrastructure or Facility



PROJECT NUMBER 7001
PROJECT CATEGORY Storm Drain
PROJECT LOCATION Citywide
COUNCIL WARD All Wards

PROJECT DESCRIPTION
This project allocates essential funding for City staff to address ad-hoc drainage issues, emergency repairs, and unforeseen infrastructure concerns that arise throughout the fiscal year. By maintaining a dedicated resource for immediate response, the City can quickly mitigate localized flooding, manage emergency storm drain failures, and repair compromised pipe segments before they escalate. These proactive and reactive improvements are vital for preventing street sinkholes and roadway sub-base damage, ensuring the structural integrity of the transportation network. Additionally, the project enhances the pedestrian environment by eliminating standing water and ensuring efficient drainage across all public facilities. This program directly addresses the Risk to Health, Safety and Environment and maintains the City's basic level of service.

PROJECT STATUS
This is an ongoing annual construction and repair project. Requests are evaluated and prioritized on a continuous basis to ensure a timely response to flooding and drainage issues as they are identified by staff or via citizen service requests.

OPERATING BUDGET IMPACT
This is a rehabilitation of existing infrastructure and will not require additional operational or maintenance costs.

PROJECT FUNDING OVERVIEW

Total Project Cost	Prior Years Funding	Five-Year Plan	Remaining Needed
Ongoing	$ 2,098,894	$ 750,000	Ongoing

TWO-YEAR BUDGET AND FIVE-YEAR PLAN

Funding Source	FY 2026/27	FY 2027/28	FY 2028/29	FY 2029/30	FY 2030/31	Total
230 - Special Gas Tax	$ 50,000	$ 50,000	$ 50,000	$ 50,000	$ 50,000	$ 250,000
410 - Storm Drain	100,000	100,000	100,000	100,000	100,000	500,000
Total Funding	**$ 150,000**	**$ 150,000**	**$ 150,000**	**$ 150,000**	**$ 150,000**	**$ 750,000**

NORTHSIDE MASTER DRAINAGE STUDY

PRIORITIZATION CATEGORIES

- ☐ Risk to Health, Safety and Environment
- ☒ Regulatory or Mandated Requirements
- ☐ Asset Condition, Annual Recurring Costs, and Asset Longevity
- ☒ Community Investment and Economic Prosperity
- ☐ Level and Quality of Service
- ☒ Sustainability and Conservation
- ☐ Funding Availability
- ☐ Project Readiness
- ☒ Multiple Category Benefit and Bundling Opportunities

NEW OR EXISTING

- ☒ New Infrastructure or Facility
- ☐ Existing Infrastructure or Facility

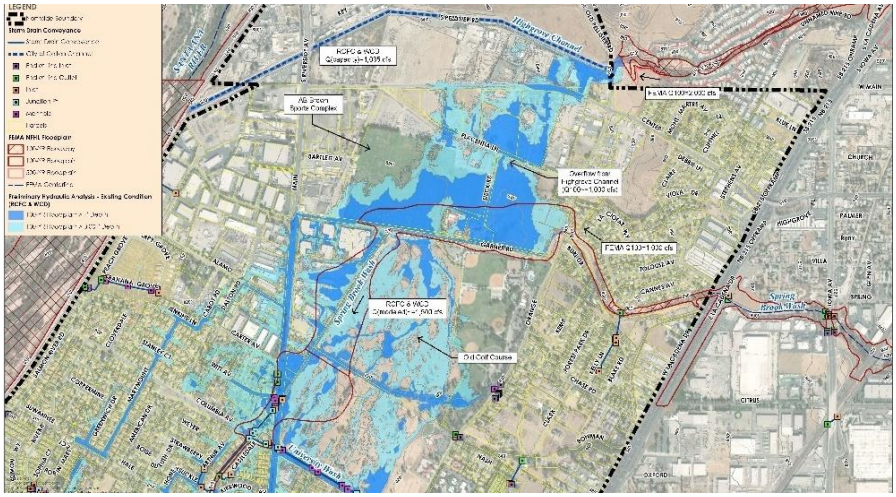

PROJECT NUMBER 9183 **COUNCIL WARD** 1
PROJECT CATEGORY Storm Drain
PROJECT LOCATION Area of Northside Specific Plan – 1,700 acres

PROJECT DESCRIPTION
The Northside Specific Plan (NSP) Area covers approximately 1,700 acres of land within the jurisdictional boundaries of the City of Riverside, the City of Colton, and the County of Riverside. The Plan includes a Hydrology Study and associated funding to hire a consultant to develop a "Northside Master Drainage Plan" (NMDP) and investigate and evaluate drainage issues discovered during the Northside Specific Plan Environmental Impact Report (EIR) process and identify economically feasible capital improvements to provide appropriate flood protection to the area.

PROJECT STATUS
The consultant has completed 50% of the study. However, they have revisited the study due to a new project within the area. The study is expected to be completed by Winter 2026.

OPERATING BUDGET IMPACT
This project is a study of the area and will not have any operating budget impact.

PROJECT FUNDING OVERVIEW

Total Project Cost	Prior Years Funding	Five-Year Plan	Remaining Needed
$ 363,530	$ 363,530	$ -	$ -

TWO-YEAR BUDGET AND FIVE-YEAR PLAN

Funding Source	FY 2026/27	FY 2027/28	FY 2028/29	FY 2029/30	FY 2030/31	Total
N/A	$ -	$ -	$ -	$ -	$ -	$ -
Total Funding	**$ -**	**$ -**	**$ -**	**$ -**	**$ -**	**$ -**

STORM DRAIN FIELD OFFICE

PRIORITIZATION CATEGORIES

- ☐ Risk to Health, Safety and Environment
- ☐ Regulatory or Mandated Requirements
- ☒ Asset Condition, Annual Recurring Costs, and Asset Longevity
- ☐ Community Investment and Economic Prosperity
- ☐ Level and Quality of Service
- ☒ Sustainability and Conservation
- ☐ Funding Availability
- ☐ Project Readiness
- ☒ Multiple Category Benefit and Bundling Opportunities

NEW OR EXISTING

- ☒ New Infrastructure or Facility
- ☒ Existing Infrastructure or Facility



PROJECT NUMBER 9227 **COUNCIL WARD** 3
PROJECT CATEGORY Storm Drain
PROJECT LOCATION 5950 Acorn Street, Water Quality Control Plant

PROJECT DESCRIPTION

The City of Riverside Public Works Department maintains a storm drain system consisting of over 5,000 catch basins and 190 miles of pipe. The section responsible for this maintenance has relocated to the Riverside Water Quality Control Plant (RWQCP) located at 5950 Acorn Street Riverside CA 92504. The Public Works Department is seeking to construct a modular structure for field crews to meet, plan, and coordinate maintenance activities. The structure proposed is a permanent 24' x 60' modular structure to be located at a designated area of the RWQCP. In 2012, this area was cleared, compacted, and utilities installed to accommodate construction trailers for a multi-year construction project. One 60 x 60 permanent modular structure remains, and this 24 x 60 permanent modular structure would be built next to it.

PROJECT STATUS

All of the required drawings have been completed. The next step is to submit the project for plan check at the City and State levels since it is a modular building. Once the plan has been approved, construction can begin. The estimated completion date for the construction is Fall 2026.

OPERATING BUDGET IMPACT

There will not be any additional operating or maintenance charges once the project is complete. The team is going from one building to another building within the RWQCP.

PROJECT FUNDING OVERVIEW			
Total Project Cost	Prior Years Funding	Five-Year Plan	Remaining Needed
$ 811,674	$ 811,674	$ -	$ -

TWO-YEAR BUDGET AND FIVE-YEAR PLAN						
Funding Source	FY 2026/27	FY 2027/28	FY 2028/29	FY 2029/30	FY 2030/31	Total
N/A	$ -	$ -	$ -	$ -	$ -	$ -
Total Funding	**$ -**	**$ -**	**$ -**	**$ -**	**$ -**	**$ -**

THIRTEENTH STREET STORM DRAIN

PRIORITIZATION CATEGORIES

- ☒ Risk to Health, Safety and Environment
- ☐ Regulatory or Mandated Requirements
- ☐ Asset Condition, Annual Recurring Costs, and Asset Longevity
- ☐ Community Investment and Economic Prosperity
- ☒ Level and Quality of Service
- ☒ Sustainability and Conservation
- ☐ Funding Availability
- ☐ Project Readiness
- ☐ Multiple Category Benefit and Bundling Opportunities

NEW OR EXISTING

- ☐ New Infrastructure or Facility
- ☒ Existing Infrastructure or Facility



PROJECT NUMBER 9330 **COUNCIL WARD** 1
PROJECT CATEGORY Storm Drain
PROJECT LOCATION Thirteenth Street between Market Street and Main Street

PROJECT DESCRIPTION
This project involves the urgent repair of existing storm drain infrastructure to address multiple failed pipe segments. These structural failures have significantly restricted hydraulic capacity, leading to recurring water backups and localized flooding within City streets during rain events. The scope of work includes the replacement or structural lining of the damaged sections to restore proper flow and prevent further deterioration of the roadway sub-base. By correcting these failures, the project mitigates the Risk to Health, Safety and Environment and prevents hazardous standing water on public thoroughfares. This project is essential for maintaining the City's asset condition and restoring the drainage system to its original design intent.

PROJECT STATUS
The project is underway with an estimated completion date of December 2028.

OPERATING BUDGET IMPACT
Maintenance and operations will be absorbed in the current Public Works maintenance budget.

PROJECT FUNDING OVERVIEW

Total Project Cost	Prior Years Funding	Five-Year Plan	Remaining Needed
$ 860,000	$ 213,373	$ 646,627	$ -

TWO-YEAR BUDGET AND FIVE-YEAR PLAN

Funding Source	FY 2026/27	FY 2027/28	FY 2028/29	FY 2029/30	FY 2030/31	Total
230 - Special Gas Tax	$ 36,627	$ -	$ -	$ -	$ -	$ 36,627
432 - Measure A	610,000	-	-	-	-	610,000
Total Funding	**$ 646,627**	**$ -**	**$ -**	**$ -**	**$ -**	**$ 646,627**

This Page Intentionally Left Blank

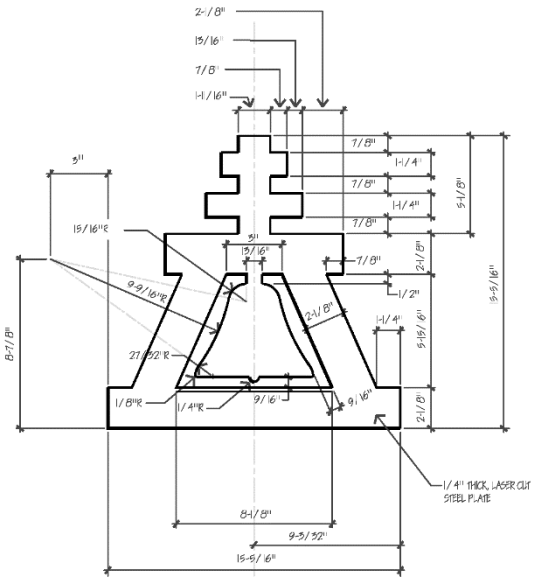



TRANSPORTATION

PROJECT LOCATION MAP

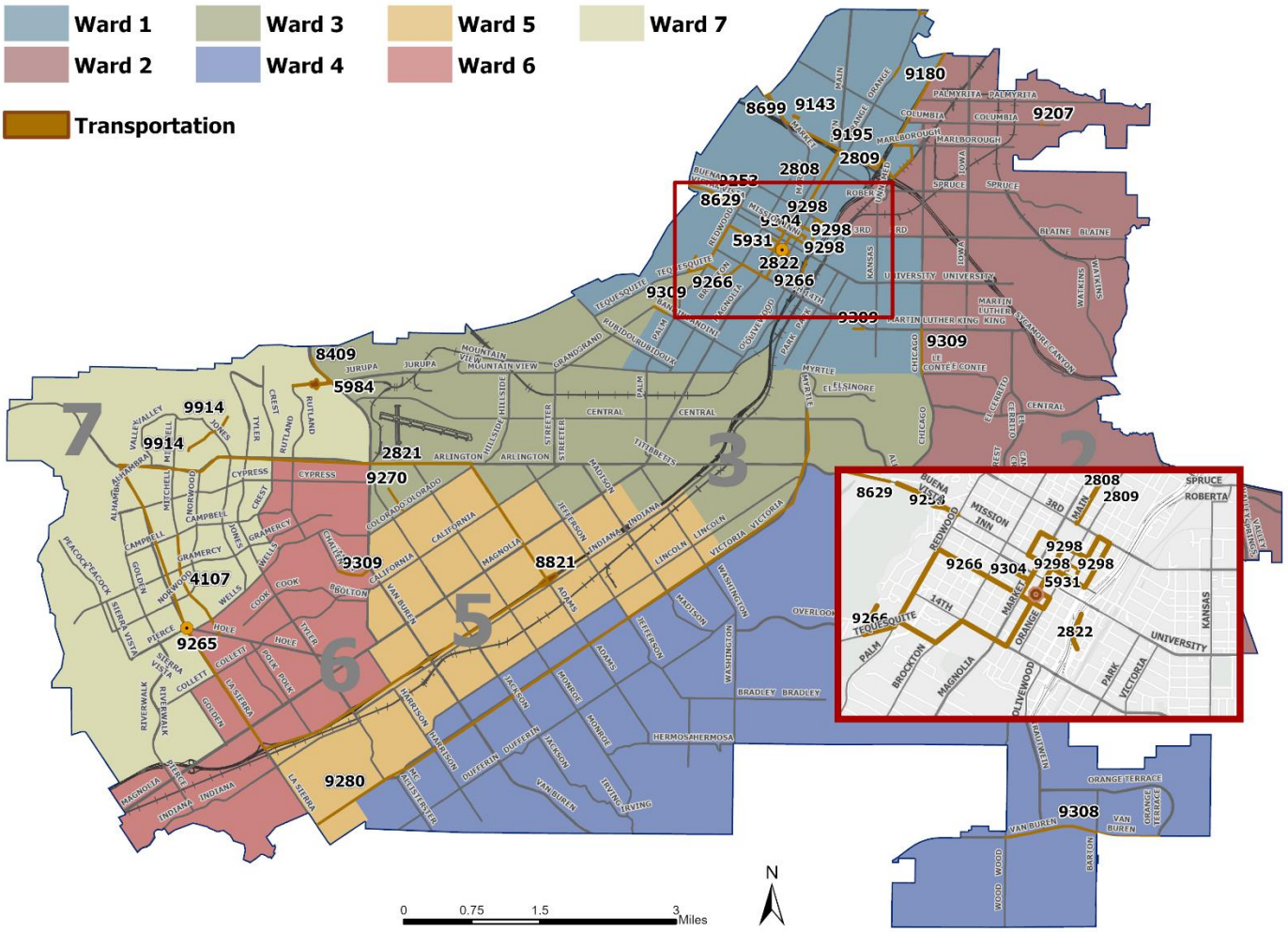

Note: This map includes all active and new capital projects. Ongoing and citywide projects are not included on the map. To view additional information and detailed maps, please visit the City's Budget Transparency Portal at https://Riverside.OpenBook.Questica.com.



This Page Intentionally Left Blank

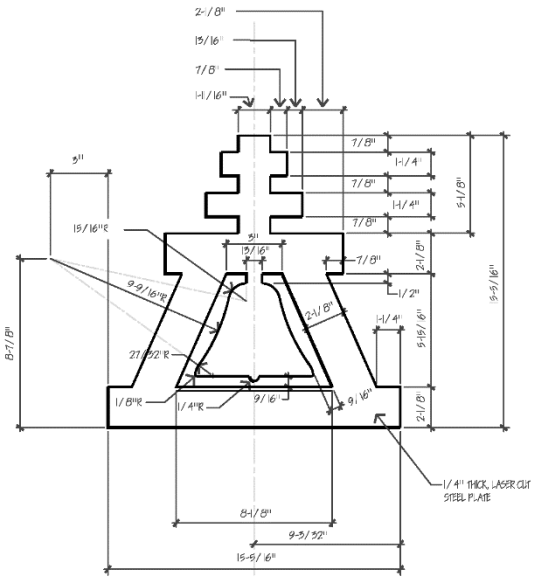

ADAMS STREET/STATE ROUTE 91 INTERCHANGE IMPROVEMENTS

PRIORITIZATION CATEGORIES

- ☒ Risk to Health, Safety and Environment
- ☐ Regulatory or Mandated Requirements
- ☐ Asset Condition, Annual Recurring Costs, and Asset Longevity
- ☐ Community Investment and Economic Prosperity
- ☒ Level and Quality of Service
- ☐ Sustainability and Conservation
- ☒ Funding Availability
- ☒ Project Readiness
- ☒ Multiple Category Benefit and Bundling Opportunities

NEW OR EXISTING

- ☒ New Infrastructure or Facility
- ☒ Existing Infrastructure or Facility



PROJECT NUMBER 8821 **COUNCIL WARD** 5
PROJECT CATEGORY Transportation
PROJECT LOCATION Adams Street at State Route 91

PROJECT DESCRIPTION
This project is needed to resolve traffic congestion on City streets surrounding the interchange as well as State Route (SR) 91 on/off ramps. This project includes the reconfiguration of the Adams Street interchange at SR-91.

PROJECT STATUS
The project is in the Project Approval and Environmental Document phase to prepare technical studies in compliance with the National Environmental Policy Act (NEPA) for the one-build and one no-build alternative. Caltrans will review and approve the NEPA studies, reports, and documents. The Project Approval and Environmental Document phase is anticipated to be completed in Spring 2026. Estimated completion date for the project is late 2035.

OPERATING BUDGET IMPACT
There are no additional operating impacts anticipated with the completion of this project.

PROJECT FUNDING OVERVIEW

Total Project Cost	Prior Years Funding	Five-Year Plan	Remaining Needed
$ 129,000,000	$ 6,900,000	$ -	$ 122,100,000

TWO-YEAR BUDGET AND FIVE-YEAR PLAN

Funding Source	FY 2026/27	FY 2027/28	FY 2028/29	FY 2029/30	FY 2030/31	Total
N/A	$ -	$ -	$ -	$ -	$ -	$ -
Total Funding	**$ -**	**$ -**	**$ -**	**$ -**	**$ -**	**$ -**

ARTERIAL INTERCONNECT MAINTENANCE & REPLACEMENT

PRIORITIZATION CATEGORIES

- ☒ Risk to Health, Safety and Environment
- ☐ Regulatory or Mandated Requirements
- ☐ Asset Condition, Annual Recurring Costs, and Asset Longevity
- ☐ Community Investment and Economic Prosperity
- ☒ Level and Quality of Service
- ☐ Sustainability and Conservation
- ☒ Funding Availability
- ☒ Project Readiness
- ☒ Multiple Category Benefit and Bundling Opportunities

NEW OR EXISTING

- ☐ New Infrastructure or Facility
- ☒ Existing Infrastructure or Facility

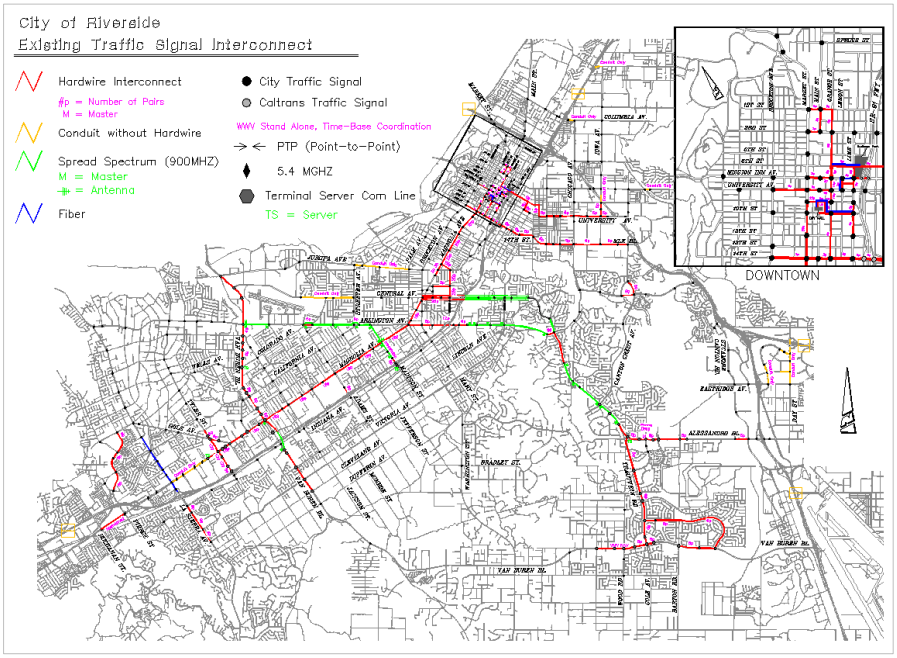

PROJECT NUMBER 5862
PROJECT CATEGORY Transportation
PROJECT LOCATION Citywide
COUNCIL WARD All Wards

PROJECT DESCRIPTION
This project is for the replacement of traffic signal interconnect cabling, modems, and other related equipment used to facilitate communication between traffic signals and the Traffic Management Center (TMC). This project is used to provide interconnections at new locations and establish communications with the TMC. The City has approximately 150 traffic signals making use of traditional arterial interconnect to communicate with the TMC. Interconnect is used along major roadways such as Magnolia Avenue, Tyler Street, La Sierra Avenue, Victoria Avenue, Van Buren Boulevard, Alessandro Boulevard, Central Avenue, Fourteenth Street, and University Avenue, along with locations on intersecting roadways.

PROJECT STATUS
This is an ongoing project for the replacement of traffic signal interconnect components and will be used on an as-needed basis upon inspection.

OPERATING BUDGET IMPACT
This is a rehabilitation of existing infrastructure and will not require additional operational or maintenance costs.

PROJECT FUNDING OVERVIEW

Total Project Cost	Prior Years Funding	Five-Year Plan	Remaining Needed
Ongoing	$ 654,384	$ 200,000	Ongoing

TWO-YEAR BUDGET AND FIVE-YEAR PLAN

Funding Source	FY 2026/27	FY 2027/28	FY 2028/29	FY 2029/30	FY 2030/31	Total
432 - Measure A	$ 40,000	$ 40,000	$ 40,000	$ 40,000	$ 40,000	$ 200,000
Total Funding	**$ 40,000**	**$ 40,000**	**$ 40,000**	**$ 40,000**	**$ 40,000**	**$ 200,000**

BATTERY BACKUP SYSTEM INSTALLATION

PRIORITIZATION CATEGORIES

- ☒ Risk to Health, Safety and Environment
- ☒ Regulatory or Mandated Requirements
- ☐ Asset Condition, Annual Recurring Costs, and Asset Longevity
- ☒ Community Investment and Economic Prosperity
- ☒ Level and Quality of Service
- ☐ Sustainability and Conservation
- ☐ Funding Availability
- ☐ Project Readiness
- ☒ Multiple Category Benefit and Bundling Opportunities

NEW OR EXISTING

- ☐ New Infrastructure or Facility
- ☒ Existing Infrastructure or Facility



PROJECT NUMBER 9136
PROJECT CATEGORY Transportation
PROJECT LOCATION Citywide
COUNCIL WARD All Wards

PROJECT DESCRIPTION
The traffic signals have battery systems that allow for continued usage throughout any power outage. These battery systems have an expected useful life of four to five years. This project is to replace 100 critically located traffic signal backup systems and batteries. Signals along most major arterials have battery backups. This feature reduces the need to dispatch on-call staff for brief outages and can help maintain traffic flow during an incident where power has been lost and evacuations are necessary.

PROJECT STATUS
Construction for this project is expected to begin in Summer 2027 with an estimated completion date of Summer 2030.

OPERATING BUDGET IMPACT
There will be an operating impact once this project is completed. The estimated annual cost of maintenance for the system is $10,000. However, as the project gets closer to completion a more detailed analysis will be done.

PROJECT FUNDING OVERVIEW

Total Project Cost	Prior Years Funding	Five-Year Plan	Remaining Needed
$ 600,000	$ 600,000	$ -	$ -

TWO-YEAR BUDGET AND FIVE-YEAR PLAN

Funding Source	FY 2026/27	FY 2027/28	FY 2028/29	FY 2029/30	FY 2030/31	Total
N/A	$ -	$ -	$ -	$ -	$ -	$ -
Total Funding	**$ -**	**$ -**	**$ -**	**$ -**	**$ -**	**$ -**

CDBG STREET IMPROVEMENTS - MATCHING FUNDS

PRIORITIZATION CATEGORIES

- ☒ Risk to Health, Safety and Environment
- ☒ Regulatory or Mandated Requirements
- ☒ Asset Condition, Annual Recurring Costs, and Asset Longevity
- ☐ Community Investment and Economic Prosperity
- ☒ Level and Quality of Service
- ☐ Sustainability and Conservation
- ☒ Funding Availability
- ☒ Project Readiness
- ☒ Multiple Category Benefit and Bundling Opportunities

NEW OR EXISTING

- ☒ New Infrastructure or Facility
- ☒ Existing Infrastructure or Facility



PROJECT NUMBER 8888
PROJECT CATEGORY Transportation
PROJECT LOCATION Citywide
COUNCIL WARD All Wards

PROJECT DESCRIPTION
This project provides matching funds for various systematic street improvement projects awarded to Public Works under the CDBG program including construction of asphalt resurfacing; construction of pedestrian ramps with detectable warning surfaces to provide improved pedestrian access to sidewalks, and construction of new sidewalks to provide improved pedestrian access and circulation.

PROJECT STATUS
This is an ongoing project to support sidewalk improvements funded by the Community Development Block Grant (CDBG). Work is prioritized based on supporting community needs to improve sidewalks, street pavement, and ADA pedestrian access in income qualified areas.

OPERATING BUDGET IMPACT
There are no operating impacts associated with this project.

PROJECT FUNDING OVERVIEW

Total Project Cost	Prior Years Funding	Five-Year Plan	Remaining Needed
Ongoing	$ 2,318,797	$ 750,000	Ongoing

TWO-YEAR BUDGET AND FIVE-YEAR PLAN

Funding Source	FY 2026/27	FY 2027/28	FY 2028/29	FY 2029/30	FY 2030/31	Total
230 - Gas Tax	$ 150,000	$ 150,000	$ 150,000	$ 150,000	$ 150,000	$ 750,000
Total Funding	**$ 150,000**	**$ 150,000**	**$ 150,000**	**$ 150,000**	**$ 150,000**	**$ 750,000**

CHICAGO BIKE LANES & SIDEWALKS

PRIORITIZATION CATEGORIES

- ☒ Risk to Health, Safety and Environment
- ☐ Regulatory or Mandated Requirements
- ☐ Asset Condition, Annual Recurring Costs, and Asset Longevity
- ☒ Community Investment and Economic Prosperity
- ☒ Level and Quality of Service
- ☒ Sustainability and Conservation
- ☒ Funding Availability
- ☒ Project Readiness
- ☒ Multiple Category Benefit and Bundling Opportunities

NEW OR EXISTING

- ☐ New Infrastructure or Facility
- ☒ Existing Infrastructure or Facility



PROJECT NUMBER 9309 **COUNCIL WARD** 1,2,3,5,6
PROJECT CATEGORY Transportation
PROJECT LOCATION Various Locations

PROJECT DESCRIPTION
This project constructs multiple bicycle and pedestrian improvements to enhance safety and connectivity. The project includes four components: 1) Installation of a Class II bike lane on northbound Chicago Avenue between Le Conte Drive and Martin Luther King Boulevard. 2) Construction of new concrete sidewalk on the east side of the intersection of Van Buren Boulevard and Challen Avenue. 3) Construction of new concrete sidewalk on the south side of Bandini Avenue between Grand Avenue and Kendall Street. 4) Construction of new concrete sidewalk on the south side of Pennsylvania Avenue between Sedgwick Avenue and 2340 Pennsylvania Avenue.

PROJECT STATUS
The project is in the planning and design phase following the City Council's acceptance of the TDA Article 3/SB 821 grant on July 1, 2025. The construction is anticipated to begin in Summer 2027 and estimated project completion is Summer 2028.

OPERATING BUDGET IMPACT
This project is not anticipated to have a significant operating budget impact. This project will add new assets (sidewalks) and bike lane markings, resulting in a slight increase in maintenance costs. These costs, for services like sweeping, weed abatement, and eventual re-stripping, will be absorbed by the existing Public Works operating budget.

PROJECT FUNDING OVERVIEW

Total Project Cost	Prior Years Funding	Five-Year Plan	Remaining Needed
$1,124,915	$ 1,124,915	$ -	$ -

TWO-YEAR BUDGET AND FIVE-YEAR PLAN

Funding Source	FY 2026/27	FY 2027/28	FY 2028/29	FY 2029/30	FY 2030/31	Total
N/A	$ -	$ -	$ -	$ -	$ -	$ -
Total Funding	**$ -**	**$ -**	**$ -**	**$ -**	**$ -**	**$ -**

CITYWIDE ITS MASTER PLAN

PRIORITIZATION CATEGORIES

- ☒ Risk to Health, Safety and Environment
- ☐ Regulatory or Mandated Requirements
- ☒ Asset Condition, Annual Recurring Costs, and Asset Longevity
- ☐ Community Investment and Economic Prosperity
- ☒ Level and Quality of Service
- ☒ Sustainability and Conservation
- ☒ Funding Availability
- ☒ Project Readiness
- ☒ Multiple Category Benefit and Bundling Opportunities

NEW OR EXISTING

- ☐ New Infrastructure or Facility
- ☒ Existing Infrastructure or Facility



PROJECT NUMBER 2823
PROJECT CATEGORY Transportation
PROJECT LOCATION Citywide
COUNCIL WARD All Wards

PROJECT DESCRIPTION
This project funds the development of a citywide Intelligent Transportation System (ITS) Master Plan. The plan will create a comprehensive technology and deployment strategy for the City's traffic signal system network. The goal is to identify upgrades and signal coordination operations that will improve traffic flow efficiency, reduce roadway congestion, and provide motorists with real-time information on road conditions, aligning with the national Safer Roads initiative.

PROJECT STATUS
This is a new planning project funded by the Safe Streets For All grant accepted in February 2025. The City will now begin the procurement process to hire a consultant. The master plan is expected to begin in Fall 2025 and be completed Fall of 2030.

OPERATING BUDGET IMPACT
This project is a planning study and is not anticipated to have a significant operating budget impact.

PROJECT FUNDING OVERVIEW

Total Project Cost	Prior Years Funding	Five-Year Plan	Remaining Needed
$ 300,000	$ 300,000	$ -	$ -

TWO-YEAR BUDGET AND FIVE-YEAR PLAN

Funding Source	FY 2026/27	FY 2027/28	FY 2028/29	FY 2029/30	FY 2030/31	Total
N/A	$ -	$ -	$ -	$ -	$ -	$ -
Total Funding	**$ -**	**$ -**	**$ -**	**$ -**	**$ -**	**$ -**

CITYWIDE PEDESTRIAN AND BIKE INFRASTRUCTURE

PRIORITIZATION CATEGORIES

- ☒ Risk to Health, Safety and Environment
- ☐ Regulatory or Mandated Requirements
- ☐ Asset Condition, Annual Recurring Costs, and Asset Longevity
- ☒ Community Investment and Economic Prosperity
- ☐ Level and Quality of Service
- ☒ Sustainability and Conservation
- ☐ Funding Availability
- ☐ Project Readiness
- ☒ Multiple Category Benefit and Bundling Opportunities

NEW OR EXISTING

- ☒ New Infrastructure or Facility
- ☐ Existing Infrastructure or Facility



PROJECT NUMBER 9915
PROJECT CATEGORY Transportation
PROJECT LOCATION Citywide
COUNCIL WARD All Wards

PROJECT DESCRIPTION
The Riverside Citywide Pedestrian & Bicycle Improvements Project proposes to install High-Visibility Crosswalks, accessible pedestrian signal systems, Green Bike Lane Striping, Rectangular Rapid Flashing Beacons (RRFBs), LED Stop Signs, & signage/striping upgrades at twenty-four prioritized intersection locations as identified in the Local Roadway Safety Plan, Riverside PACT Plan & public requests. The project benefits include improved connectivity, enhanced safety & mobility, and encourages a more active lifestyle via walking & biking.

PROJECT STATUS
A bid has been accepted for this project with an estimated completion date of Summer 2026.

OPERATING BUDGET IMPACT
Once the project is complete, there will be ongoing maintenance costs for installed components. The Traffic Signal division will absorb the costs in their maintenance account.

PROJECT FUNDING OVERVIEW			
Total Project Cost	Prior Years Funding	Five-Year Plan	Remaining Needed
$ 1,343,775	$ 1,343,775	$ -	$ -

TWO-YEAR BUDGET AND FIVE-YEAR PLAN						
Funding Source	FY 2026/27	FY 2027/28	FY 2028/29	FY 2029/30	FY 2030/31	Total
N/A	$ -	$ -	$ -	$ -	$ -	$ -
Total Funding	**$ -**	**$ -**	**$ -**	**$ -**	**$ -**	**$ -**

CIVIL RIGHTS WALK IMPROVEMENTS

PRIORITIZATION CATEGORIES

- ☒ Risk to Health, Safety and Environment
- ☐ Regulatory or Mandated Requirements
- ☐ Asset Condition, Annual Recurring Costs, and Asset Longevity
- ☒ Community Investment and Economic Prosperity
- ☒ Level and Quality of Service
- ☒ Sustainability and Conservation
- ☐ Funding Availability
- ☐ Project Readiness
- ☒ Multiple Category Benefit and Bundling Opportunities

NEW OR EXISTING

- ☒ New Infrastructure or Facility
- ☐ Existing Infrastructure or Facility



PROJECT NUMBER 9266
COUNCIL WARD 1
PROJECT CATEGORY Transportation
PROJECT LOCATION Various

PROJECT DESCRIPTION
The purpose of this project is to construct pedestrian sidewalk, ramp, signal, and wayfinding improvements to establish a Civil Rights Walk path in the City of Riverside Downtown area.

PROJECT STATUS
The supplemental grant funds were accepted in December 2023. The project is currently in the engineering phase and completion is anticipated in Summer 2026.

OPERATING BUDGET IMPACT
There will be no significant operating impact. Maintenance and operations will be absorbed in the current Public Works maintenance budget.

PROJECT FUNDING OVERVIEW

Total Project Cost	Prior Years Funding	Five-Year Plan	Remaining Needed
$ 3,216,000	$ 3,216,000	$ 0	$ -

TWO-YEAR BUDGET AND FIVE-YEAR PLAN

Funding Source	FY 2026/27	FY 2027/28	FY 2028/29	FY 2029/30	FY 2030/31	Total
N/A	$ -	$ -	$ -	$ -	$ -	$ -
Total Funding	**$ -**	**$ -**	**$ -**	**$ -**	**$ -**	**$ -**

CONTROLLER ASSEMBLY REPLACEMENT

PRIORITIZATION CATEGORIES

- ☒ Risk to Health, Safety and Environment
- ☒ Regulatory or Mandated Requirements
- ☒ Asset Condition, Annual Recurring Costs, and Asset Longevity
- ☐ Community Investment and Economic Prosperity
- ☒ Level and Quality of Service
- ☐ Sustainability and Conservation
- ☒ Funding Availability
- ☒ Project Readiness
- ☒ Multiple Category Benefit and Bundling Opportunities

NEW OR EXISTING

- ☐ New Infrastructure or Facility
- ☒ Existing Infrastructure or Facility



PROJECT NUMBER 5183
PROJECT CATEGORY Transportation
PROJECT LOCATION Citywide
COUNCIL WARD All Wards

PROJECT DESCRIPTION
This project is for the replacement of traffic controller boxes at various intersections throughout the City. Traffic signal controllers are electronic boxes that control the coordination of traffic signals. The most frequent need for replacement of these boxes is when the signal cabinet has been struck by a vehicle or a hardware failure occurs.

PROJECT STATUS
This is an ongoing project for the replacement of traffic signal cabinets based on an annual assessment and evaluation of failures and/or replacements from vehicular accidents.

OPERATING BUDGET IMPACT
This is a rehabilitation of existing infrastructure and will not require additional operational or maintenance costs.

PROJECT FUNDING OVERVIEW

Total Project Cost	Prior Years Funding	Five-Year Plan	Remaining Needed
Ongoing	$ 1,170,137	$ 350,000	Ongoing

TWO-YEAR BUDGET AND FIVE-YEAR PLAN

Funding Source	FY 2026/27	FY 2027/28	FY 2028/29	FY 2029/30	FY 2030/31	Total
432 - Measure A	$ 70,000	$ 70,000	$ 70,000	$ 70,000	$ 70,000	$ 350,000
Total Funding	**$ 70,000**	**$ 70,000**	**$ 70,000**	**$ 70,000**	**$ 70,000**	**$ 350,000**

CROSSING & MINOR SIGN IMPROVEMENTS

PRIORITIZATION CATEGORIES

- ☒ Risk to Health, Safety and Environment
- ☒ Regulatory or Mandated Requirements
- ☐ Asset Condition, Annual Recurring Costs, and Asset Longevity
- ☒ Community Investment and Economic Prosperity
- ☒ Level and Quality of Service
- ☐ Sustainability and Conservation
- ☐ Funding Availability
- ☐ Project Readiness
- ☒ Multiple Category Benefit and Bundling Opportunities

NEW OR EXISTING

- ☒ New Infrastructure or Facility
- ☐ Existing Infrastructure or Facility



PROJECT NUMBER 9207 **COUNCIL WARD** 2
PROJECT CATEGORY Transportation
PROJECT LOCATION Mid-Block Crossing along Columbia Avenue at Northgate Street (East-side)

PROJECT DESCRIPTION
The Columbia Mid-Block Crossing Improvements will construct a High-Intensity Activated Crosswalk (HAWK) signal to provide the connection for pedestrians & trail users between northerly and southerly segments of the Gage Canal trail. The mid-block crossing will include appropriate signage, striping, and signal improvements that are compliant with local design standards. The project also includes minor signage improvements at the Marlborough Avenue and Spruce Street Gage Canal crossings which are compliant with local design standards.

PROJECT STATUS
The additional pending Recreational Trails Program (RTP) grant requested a full Environmental Review with additional studies, and Council approved to increase the contingency so the consultant can do the additional studies. We expect this to take up to an additional 12 months before we can go back out to bid for construction. The project is expected to be completed in Spring 2027.

OPERATING BUDGET IMPACT
There will be no significant operating impact. Maintenance and operations will be absorbed in the current Public Works maintenance budget.

PROJECT FUNDING OVERVIEW			
Total Project Cost	Prior Years Funding	Five-Year Plan	Remaining Needed
$210,000	$ 210,000	$ -	-

TWO-YEAR BUDGET AND FIVE-YEAR PLAN						
Funding Source	FY 2026/27	FY 2027/28	FY 2028/29	FY 2029/30	FY 2030/31	Total
N/A	$ -	$ -	$ -	$ -	$ -	$ -
Total Funding	**$ -**	**$ -**	**$ -**	**$ -**	**$ -**	**$ -**

CURB & GUTTER REPAIRS

PRIORITIZATION CATEGORIES

- ☒ Risk to Health, Safety and Environment
- ☐ Regulatory or Mandated Requirements
- ☐ Asset Condition, Annual Recurring Costs, and Asset Longevity
- ☐ Community Investment and Economic Prosperity
- ☒ Level and Quality of Service
- ☐ Sustainability and Conservation
- ☒ Funding Availability
- ☒ Project Readiness
- ☒ Multiple Category Benefit and Bundling Opportunities

NEW OR EXISTING

- ☐ New Infrastructure or Facility
- ☒ Existing Infrastructure or Facility



PROJECT NUMBER 8883
PROJECT CATEGORY Transportation
PROJECT LOCATION Citywide
COUNCIL WARD All Wards

PROJECT DESCRIPTION
This project provides for the repair of concrete curbs and gutters throughout the City. The project will remove and reconstruct curbs and gutters that are damaged and/or uplifted, mostly from tree roots.

PROJECT STATUS
This is an ongoing project to repair curbs and gutters throughout the City identified per inspection on an as-needed basis.

OPERATING BUDGET IMPACT
This is a rehabilitation of existing infrastructure and will not require additional operational or maintenance costs.

PROJECT FUNDING OVERVIEW

Total Project Cost	Prior Years Funding	Five-Year Plan	Remaining Needed
Ongoing	$ 2,263,506	$ 1,000,000	Ongoing

TWO-YEAR BUDGET AND FIVE-YEAR PLAN

Funding Source	FY 2026/27	FY 2027/28	FY 2028/29	FY 2029/30	FY 2030/31	Total
230 - Gas Tax	$ 200,000	$ 200,000	$ 200,000	$ 200,000	$ 200,000	$ 1,000,000
Total Funding	**$ 200,000**	**$ 200,000**	**$ 200,000**	**$ 200,000**	**$ 200,000**	**$ 1,000,000**

FIVE POINTS INTERSECTION IMPROVEMENTS

PRIORITIZATION CATEGORIES

- ☒ Risk to Health, Safety and Environment
- ☐ Regulatory or Mandated Requirements
- ☐ Asset Condition, Annual Recurring Costs, and Asset Longevity
- ☒ Community Investment and Economic Prosperity
- ☒ Level and Quality of Service
- ☐ Sustainability and Conservation
- ☐ Funding Availability
- ☐ Project Readiness
- ☒ Multiple Category Benefit and Bundling Opportunities

NEW OR EXISTING

- ☒ New Infrastructure or Facility
- ☐ Existing Infrastructure or Facility



PROJECT NUMBER 9265 **COUNCIL WARD** 6, 7
PROJECT CATEGORY Transportation
PROJECT LOCATION La Sierra/Hole/Bushnell intersection; Wells Ave from Doane to Tyler & Doane

PROJECT DESCRIPTION
The purpose of this project is to upgrade crosswalks at the Five Points intersection including in-pavement lighting, construct a 9,000 square-foot pedestrian plaza with removable bollards, and construct 1.5 miles of sidewalk.

PROJECT STATUS
The project is in progress with an estimated completion date of early 2028.

OPERATING BUDGET IMPACT
There are no additional operating impacts as this is a rehabilitation of existing infrastructure.

PROJECT FUNDING OVERVIEW			
Total Project Cost	Prior Years Funding	Five-Year Plan	Remaining Needed
$ 7,416,000	$ 2,025,000	$ -	$ 5,391,000

TWO-YEAR BUDGET AND FIVE-YEAR PLAN						
Funding Source	FY 2026/27	FY 2027/28	FY 2028/29	FY 2029/30	FY 2030/31	Total
N/A	$ -	$ -	$ -	$ -	$ -	$ -
Total Funding	**$ -**	**$ -**	**$ -**	**$ -**	**$ -**	**$ -**

JURUPA AVENUE EXTENSION

PRIORITIZATION CATEGORIES

- ☐ Risk to Health, Safety and Environment
- ☒ Regulatory or Mandated Requirements
- ☐ Asset Condition, Annual Recurring Costs, and Asset Longevity
- ☐ Community Investment and Economic Prosperity
- ☐ Level and Quality of Service
- ☒ Sustainability and Conservation
- ☒ Funding Availability
- ☒ Project Readiness
- ☒ Multiple Category Benefit and Bundling Opportunities

NEW OR EXISTING

- ☐ New Infrastructure or Facility
- ☒ Existing Infrastructure or Facility



PROJECT NUMBER 5984 **COUNCIL WARD** 7
PROJECT CATEGORY Transportation
PROJECT LOCATION Jurupa Avenue from Van Buren Boulevard to Rutland Avenue

PROJECT DESCRIPTION
This project included the construction of the Jurupa Avenue Extension as a four-lane divided arterial between Van Buren Boulevard to 610 feet westerly, and a two-lane roadway across the former Hole Lake culvert to Rutland Avenue, with curb, gutter, and sidewalk, landscaped median, and parkways, bike lanes, streetlights, underground electrical facilities, and potable and reclaimed water lines. The project will also provide habitat mitigation services as required for the completion of the Jurupa Avenue Extension project completed in 2012. The services agreement will terminate when the restoration improvements have been installed and established, and the endowment paid to the Riverside-Corona Resource Conservation District (RCRCD) for perpetual maintenance.

PROJECT STATUS
The construction portion of this project is complete. However, in September 2015, the City and RCRCD entered into a services agreement for habitat mitigation services. RCRCD is responsible for restoring the habitat areas impacted by the completion of the project, as well as preserving the restored areas in perpetuity. The project was delayed due to an influx of homeless encampments. The agreement amendment is currently being routed through the City for approval. The mitigation is projected to be complete by Summer 2027.

OPERATING BUDGET IMPACT
This is a rehabilitation of existing infrastructure and will not require additional operational or maintenance costs.

PROJECT FUNDING OVERVIEW

Total Project Cost	Prior Years Funding	Five-Year Plan	Remaining Needed
$ 11,164,773	$ 11,164,773	$ -	$ -

TWO-YEAR BUDGET AND FIVE-YEAR PLAN

Funding Source	FY 2026/27	FY 2027/28	FY 2028/29	FY 2029/30	FY 2030/31	Total
N/A	$ -	$ -	$ -	$ -	$ -	$ -
Total Funding	**$ -**	**$ -**	**$ -**	**$ -**	**$ -**	**$ -**

LED SIGNAL LENS REPLACEMENTS

PRIORITIZATION CATEGORIES

- ☒ Risk to Health, Safety and Environment
- ☐ Regulatory or Mandated Requirements
- ☒ Asset Condition, Annual Recurring Costs, and Asset Longevity
- ☐ Community Investment and Economic Prosperity
- ☒ Level and Quality of Service
- ☐ Sustainability and Conservation
- ☒ Funding Availability
- ☒ Project Readiness
- ☒ Multiple Category Benefit and Bundling Opportunities

NEW OR EXISTING

- ☐ New Infrastructure or Facility
- ☒ Existing Infrastructure or Facility



PROJECT NUMBER 8619
PROJECT CATEGORY Transportation
PROJECT LOCATION Citywide
COUNCIL WARD All Wards

PROJECT DESCRIPTION
This is an ongoing project to perform regular retrofit of the 400 traffic signals to ensure that the LED signal lenses are in working order as a component of the Traffic Management System.

PROJECT STATUS
This is an ongoing maintenance project with activity occurring citywide throughout the year. LED lenses are replaced as they are identified for service during routine inspections or upon physical failure.

OPERATING BUDGET IMPACT
This is a rehabilitation of existing infrastructure and will not require additional operational or maintenance costs.

PROJECT FUNDING OVERVIEW

Total Project Cost	Prior Years Funding	Five-Year Plan	Remaining Needed
Ongoing	$ 200,000	$ 100,000	Ongoing

TWO-YEAR BUDGET AND FIVE-YEAR PLAN

Funding Source	FY 2026/27	FY 2027/28	FY 2028/29	FY 2029/30	FY 2030/31	Total
432 - Measure A	$ 20,000	$ 20,000	$ 20,000	$ 20,000	$ 20,000	$ 100,000
Total Funding	**$ 20,000**	**$ 20,000**	**$ 20,000**	**$ 20,000**	**$ 20,000**	**$ 100,000**

MAJOR STREETS REHABILITATION

PRIORITIZATION CATEGORIES

- ☒ Risk to Health, Safety and Environment
- ☒ Regulatory or Mandated Requirements
- ☐ Asset Condition, Annual Recurring Costs, and Asset Longevity
- ☐ Community Investment and Economic Prosperity
- ☒ Level and Quality of Service
- ☐ Sustainability and Conservation
- ☒ Funding Availability
- ☒ Project Readiness
- ☒ Multiple Category Benefit and Bundling Opportunities

NEW OR EXISTING

- ☐ New Infrastructure or Facility
- ☒ Existing Infrastructure or Facility



PROJECT NUMBER 8880
PROJECT CATEGORY Transportation
PROJECT LOCATION Citywide
COUNCIL WARD All Wards

PROJECT DESCRIPTION
This project provides for the systematic resurfacing (asphalt overlay) of all arterial streets throughout the City at prescribed intervals. These intervals vary depending on the age of the street and traffic volume. The project also includes the removal and replacement of non-compliant pedestrian ramps and damaged curbs, gutters, cross-gutters, driveways, and sidewalks adjacent to the street to provide proper drainage and ADA compliance.

PROJECT STATUS
This is an ongoing project with activity occurring throughout the year. Locations are prioritized based on the Pavement Condition and resurfacing schedules are coordinated on an as needed basis.

OPERATING BUDGET IMPACT
This is a rehabilitation of existing infrastructure and will not require additional operational or maintenance costs.

PROJECT FUNDING OVERVIEW

Total Project Cost	Prior Years Funding	Five-Year Plan	Remaining Needed
Ongoing	$ 20,759,590	$ 27,275,000	Ongoing

TWO-YEAR BUDGET AND FIVE-YEAR PLAN

Funding Source	FY 2026/27	FY 2027/28	FY 2028/29	FY 2029/30	FY 2030/31	Total
432 - Measure A	$ 5,075,000	$ 5,575,000	$ 6,075,000	$ 5,275,000	$ 5,275,000	$ 27,275,000
Total Funding	**$ 5,075,000**	**$ 5,575,000**	**$ 6,075,000**	**$ 5,275,000**	**$ 5,275,000**	**$ 27,275,000**

MARKET STREET BRIDGE REPLACEMENT OVER THE SANTA ANA RIVER

PRIORITIZATION CATEGORIES

- ☒ Risk to Health, Safety and Environment
- ☐ Regulatory or Mandated Requirements
- ☒ Asset Condition, Annual Recurring Costs, and Asset Longevity
- ☐ Community Investment and Economic Prosperity
- ☒ Level and Quality of Service
- ☐ Sustainability and Conservation
- ☒ Funding Availability
- ☒ Project Readiness
- ☒ Multiple Category Benefit and Bundling Opportunities

NEW OR EXISTING

- ☒ New Infrastructure or Facility
- ☒ Existing Infrastructure or Facility



PROJECT NUMBER 8699 **COUNCIL WARD** 1
PROJECT CATEGORY Transportation
PROJECT LOCATION Market Street Bridge over the Santa Ana River

PROJECT DESCRIPTION
This project is for the replacement of the Market Street Bridge. The existing Market Street Bridge over the Santa Ana River is an important transportation link between the Cities of Riverside and Jurupa Valley. This 12-span steel plate girder bridge is 1,195 feet long and was constructed in 1953. It will be replaced with a new 4-lane bridge including standard shoulders and a dedicated multi-purpose pedestrian lane.
The County of Riverside is taking the lead on this project and the City of Riverside will only be responsible for providing its fair share contribution to Riverside County to satisfy the local match requirements.

PROJECT STATUS
The project is managed by Riverside County. The Highway Bridge Program is having funding issues. Construction is anticipated to be completed in December 2028 but could be delayed further due to these funding issues.

OPERATING BUDGET IMPACT
This is a rehabilitation of existing infrastructure and will not require additional operational or maintenance costs.

PROJECT FUNDING OVERVIEW

Total Project Cost	Prior Years Funding	Five-Year Plan	Remaining Needed
$ 3,506,000	$ 1,306,000	$ 2,200,000	$ -

TWO-YEAR BUDGET AND FIVE-YEAR PLAN

Funding Source	FY 2026/27	FY 2027/28	FY 2028/29	FY 2029/30	FY 2030/31	Total
432 - Measure A	$ 2,200,000	$ -	$ -	$ -	$ -	$ 2,200,000
Total Funding	**$ 2,200,000**	**$ -**	**$ -**	**$ -**	**$ -**	**$ 2,200,000**

MARKETPLACE PED/BIKE BRIDGE MASTER PLAN

PRIORITIZATION CATEGORIES

- ☒ Risk to Health, Safety and Environment
- ☐ Regulatory or Mandated Requirements
- ☐ Asset Condition, Annual Recurring Costs, and Asset Longevity
- ☒ Community Investment and Economic Prosperity
- ☒ Level and Quality of Service
- ☒ Sustainability and Conservation
- ☒ Funding Availability
- ☒ Project Readiness
- ☒ Multiple Category Benefit and Bundling Opportunities

NEW OR EXISTING

- ☐ New Infrastructure or Facility
- ☒ Existing Infrastructure or Facility

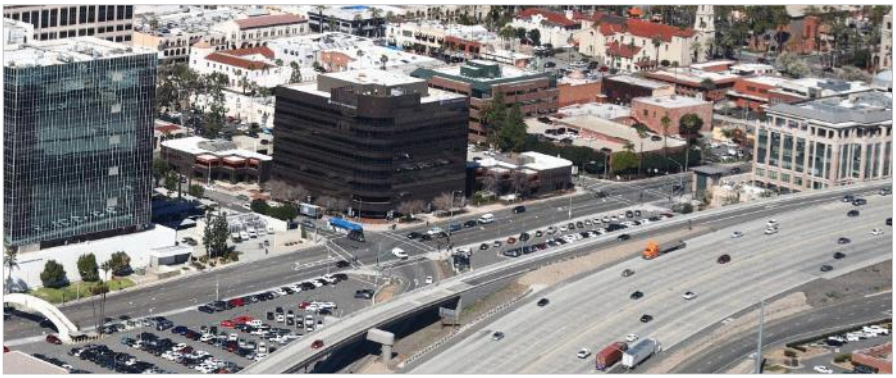

PROJECT NUMBER 2822 **COUNCIL WARD** 1
PROJECT CATEGORY Transportation
PROJECT LOCATION SR-91 Freeway in the Marketplace District

PROJECT DESCRIPTION
This project will fund a Master Plan Study for a potential pedestrian and bicycle bridge over the SR-91 Freeway in the Marketplace District. The study will conduct extensive public outreach and examine engineering feasibility and opportunities for connecting the downtown area with the Vine Street mobility hub. This study is consistent with the goals of the Riverside Marketplace District Vision Plan.

PROJECT STATUS
This is a new planning project funded by a Safe Streets For All grant accepted in February 2025. The City will now begin the procurement process to hire a consultant. The master plan study is expected to commence Fall 2026 and be completed Fall 2030.

OPERATING BUDGET IMPACT
This project is a planning study and is not anticipated to have a significant operating budget impact.

PROJECT FUNDING OVERVIEW

Total Project Cost	Prior Years Funding	Five-Year Plan	Remaining Needed
$ 700,000	$ 700,000	$ -	$ -

TWO-YEAR BUDGET AND FIVE-YEAR PLAN

Funding Source	FY 2026/27	FY 2027/28	FY 2028/29	FY 2029/30	FY 2030/31	Total
N/A	$ -	$ -	$ -	$ -	$ -	$ -
Total Funding	**$ -**	**$ -**	**$ -**	**$ -**	**$ -**	**$ -**

MINOR STREET PRESERVATION

PRIORITIZATION CATEGORIES

- ☒ Risk to Health, Safety and Environment
- ☐ Regulatory or Mandated Requirements
- ☒ Asset Condition, Annual Recurring Costs, and Asset Longevity
- ☐ Community Investment and Economic Prosperity
- ☒ Level and Quality of Service
- ☐ Sustainability and Conservation
- ☒ Funding Availability
- ☒ Project Readiness
- ☒ Multiple Category Benefit and Bundling Opportunities

NEW OR EXISTING

- ☐ New Infrastructure or Facility
- ☒ Existing Infrastructure or Facility



PROJECT NUMBER 8894
PROJECT CATEGORY Transportation
PROJECT LOCATION Citywide
COUNCIL WARD All Wards

PROJECT DESCRIPTION
This program provides for the asphalt concrete pavement preservation and resurfacing of minor streets throughout the City. This program will use a slurry seal and/or other preservation methods as determined appropriate to accomplish this goal. The systematic preservation of asphalt concrete streets at regular intervals prolongs the service life of roadway pavement sections and significantly reduces the long-term reconstruction cost.

PROJECT STATUS
This is an ongoing project to preserve and resurface minor streets throughout the City. An annual budget is allocated to this project and streets are evaluated and selected based on pavement condition and needs.

OPERATING BUDGET IMPACT
This is a rehabilitation of existing infrastructure and will not require additional operational or maintenance costs.

PROJECT FUNDING OVERVIEW

Total Project Cost	Prior Years Funding	Five-Year Plan	Remaining Needed
Ongoing	$ 6,574,971	$ 2,500,000	Ongoing

TWO-YEAR BUDGET AND FIVE-YEAR PLAN

Funding Source	FY 2026/27	FY 2027/28	FY 2028/29	FY 2029/30	FY 2030/31	Total
230 - Gas Tax	$ 500,000	$ 500,000	$ 500,000	$ 500,000	$ 500,000	$ 2,500,000
Total Funding	**$ 500,000**	**$ 500,000**	**$ 500,000**	**$ 500,000**	**$ 500,000**	**$ 2,500,000**

MINOR STREET REHABILITATION

PRIORITIZATION CATEGORIES

- ☒ Risk to Health, Safety and Environment
- ☐ Regulatory or Mandated Requirements
- ☐ Asset Condition, Annual Recurring Costs, and Asset Longevity
- ☐ Community Investment and Economic Prosperity
- ☒ Level and Quality of Service
- ☐ Sustainability and Conservation
- ☒ Funding Availability
- ☒ Project Readiness
- ☒ Multiple Category Benefit and Bundling Opportunities

NEW OR EXISTING

- ☐ New Infrastructure or Facility
- ☒ Existing Infrastructure or Facility



PROJECT NUMBER 8884
PROJECT CATEGORY Transportation
PROJECT LOCATION Citywide
COUNCIL WARD All Wards

PROJECT DESCRIPTION
This program provides the asphalt concrete pavement rehabilitation of minor streets throughout the City. This program also includes the removal and reconstruction of non-compliant pedestrian ramps and repair of curbs, gutters, driveways, and sidewalks adjacent to the street to provide proper drainage, Americans with Disabilities Act (ADA) compliance, and better ride quality.

PROJECT STATUS
This is an ongoing maintenance project with activity occurring throughout the year. Necessary repairs and specific project locations are determined annually based on the pavement condition.

OPERATING BUDGET IMPACT
This is a rehabilitation of existing infrastructure and will not require additional operational or maintenance costs.

PROJECT FUNDING OVERVIEW

Total Project Cost	Prior Years Funding	Five-Year Plan	Remaining Needed
Ongoing	$ 25,377,190	$ 7,500,000	Ongoing

TWO-YEAR BUDGET AND FIVE-YEAR PLAN

Funding Source	FY 2026/27	FY 2027/28	FY 2028/29	FY 2029/30	FY 2030/31	Total
230 - Gas Tax	$ 1,500,000	$ 1,500,000	$ 1,500,000	$ 1,500,000	$ 1,500,000	$ 7,500,000
Total Funding	**$ 1,500,000**	**$ 1,500,000**	**$ 1,500,000**	**$ 1,500,000**	**$ 1,500,000**	**$ 7,500,000**

MISCELLANEOUS BRIDGE REPAIR

PRIORITIZATION CATEGORIES

- ☒ Risk to Health, Safety and Environment
- ☐ Regulatory or Mandated Requirements
- ☐ Asset Condition, Annual Recurring Costs, and Asset Longevity
- ☐ Community Investment and Economic Prosperity
- ☐ Level and Quality of Service
- ☐ Sustainability and Conservation
- ☐ Funding Availability
- ☐ Project Readiness
- ☐ Multiple Category Benefit and Bundling Opportunities

NEW OR EXISTING

- ☐ New Infrastructure or Facility
- ☒ Existing Infrastructure or Facility



PROJECT NUMBER 8973
PROJECT CATEGORY Transportation
PROJECT LOCATION Citywide
COUNCIL WARD All Wards

PROJECT DESCRIPTION
This project funds the structural analysis of existing bridges and overpasses within the City limits to ensure the continued safety of the transportation network. The study will evaluate the integrity of various overpasses and underpasses, providing specific recommendations for necessary rehabilitation or repairs. By identifying structural deficiencies and potential failure points early, the project minimizes the Risk to Health, Safety and Environment associated with aging infrastructure. These improvements aim to restore the structural reliability of City bridges, extend the useful life of these critical capital assets, and avoid significant future costs associated with delayed maintenance. This proactive assessment is vital for maintaining the City's basic level of service.

PROJECT STATUS
This is an ongoing project. Structural evaluations are conducted annually to update the bridge repair priority list. Repair activities are scheduled throughout the year as funding and technical resources permit.

OPERATING BUDGET IMPACT
This is a rehabilitation of existing infrastructure and will not require additional operational or maintenance costs.

PROJECT FUNDING OVERVIEW

Total Project Cost	Prior Years Funding	Five-Year Plan	Remaining Needed
Ongoing	$ 250,000	$ 250,000	Ongoing

TWO-YEAR BUDGET AND FIVE-YEAR PLAN

Funding Source	FY 2026/27	FY 2027/28	FY 2028/29	FY 2029/30	FY 2030/31	Total
230 - Gas Tax	$ 50,000	$ 50,000	$ 50,000	$ 50,000	$ 50,000	$ 250,000
Total Funding	**$ 50,000**	**$ 50,000**	**$ 50,000**	**$ 50,000**	**$ 50,000**	**$ 250,000**

MISCELLANEOUS SIGNAL REVISIONS

PRIORITIZATION CATEGORIES

- ☒ Risk to Health, Safety and Environment
- ☐ Regulatory or Mandated Requirements
- ☒ Asset Condition, Annual Recurring Costs, and Asset Longevity
- ☐ Community Investment and Economic Prosperity
- ☒ Level and Quality of Service
- ☐ Sustainability and Conservation
- ☒ Funding Availability
- ☒ Project Readiness
- ☒ Multiple Category Benefit and Bundling Opportunities

NEW OR EXISTING

- ☐ New Infrastructure or Facility
- ☒ Existing Infrastructure or Facility

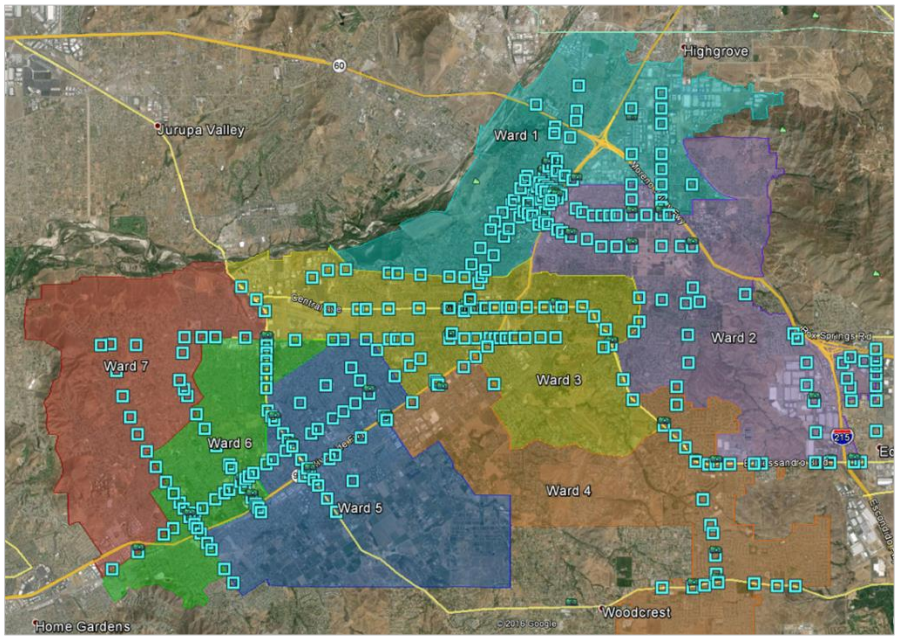

PROJECT NUMBER 5861
PROJECT CATEGORY Transportation
PROJECT LOCATION Citywide
COUNCIL WARD All Wards

PROJECT DESCRIPTION
This is a recurring project to complete traffic signal modifications, rewire aging conductors, and upgrade signals throughout the City that assist with the flow of traffic. The program is also used to replace aging conductors to ensure continuity of service at traffic signals. Such enhancements and replacements help to reduce delays and emissions, maintain safety, and improve the quality of life for our residents.

PROJECT STATUS
This is an ongoing project used year-round to install enhancements to signalized intersections to improve vehicular and pedestrian mobility as identified on an as-needed basis.

OPERATING BUDGET IMPACT
This is a rehabilitation of existing infrastructure and will not require additional operational or maintenance costs.

PROJECT FUNDING OVERVIEW

Total Project Cost	Prior Years Funding	Five-Year Plan	Remaining Needed
Ongoing	$ 2,492,513	$ 625,000	Ongoing

TWO-YEAR BUDGET AND FIVE-YEAR PLAN

Funding Source	FY 2026/27	FY 2027/28	FY 2028/29	FY 2029/30	FY 2030/31	Total
432 - Measure A	$ 125,000	$ 125,000	$ 125,000	$ 125,000	$ 125,000	$ 625,000
Total Funding	**$ 125,000**	**$ 125,000**	**$ 125,000**	**$ 125,000**	**$ 125,000**	**$ 625,000**

MISCELLANEOUS STREET CONSTRUCTION

PRIORITIZATION CATEGORIES

- ☒ Risk to Health, Safety and Environment
- ☒ Regulatory or Mandated Requirements
- ☒ Asset Condition, Annual Recurring Costs, and Asset Longevity
- ☐ Community Investment and Economic Prosperity
- ☒ Level and Quality of Service
- ☐ Sustainability and Conservation
- ☒ Funding Availability
- ☒ Project Readiness
- ☒ Multiple Category Benefit and Bundling Opportunities

NEW OR EXISTING

- ☐ New Infrastructure or Facility
- ☒ Existing Infrastructure or Facility



PROJECT NUMBER 5070
PROJECT CATEGORY Transportation
PROJECT LOCATION Citywide
COUNCIL WARD All Wards

PROJECT DESCRIPTION
City funds are allocated for work on various projects, issues, and concerns that present themselves during the year. These projects include the removal and replacement of non-compliant pedestrian ramps as well as damaged curbs, gutters, cross-gutters, driveways, and sidewalks adjacent to the street to provide proper drainage and remain in compliance with the Americans with Disabilities Act (ADA).

PROJECT STATUS
This is an ongoing maintenance project used year-round to replace pedestrian ramps, curbs, gutters, cross-gutters, driveways, and sidewalks that are evaluated and repaired or replaced on an as-needed basis.

OPERATING BUDGET IMPACT
This is a rehabilitation of existing infrastructure and will not require additional operational or maintenance costs.

PROJECT FUNDING OVERVIEW

Total Project Cost	Prior Years Funding	Five-Year Plan	Remaining Needed
Ongoing	$ 5,319,121	$ 2,815,000	Ongoing

TWO-YEAR BUDGET AND FIVE-YEAR PLAN

Funding Source	FY 2026/27	FY 2027/28	FY 2028/29	FY 2029/30	FY 2030/31	Total
230 - Gas Tax	$ 700,000	$ 615,000	$ 500,000	$ 500,000	$ 500,000	$ 2,815,000
Total Funding	**$ 700,000**	**$ 615,000**	**$ 500,000**	**$ 500,000**	**$ 500,000**	**$ 2,815,000**

MISCELLANEOUS TRAFFIC PROJECTS

PRIORITIZATION CATEGORIES

- ☒ Risk to Health, Safety and Environment
- ☐ Regulatory or Mandated Requirements
- ☐ Asset Condition, Annual Recurring Costs, and Asset Longevity
- ☐ Community Investment and Economic Prosperity
- ☒ Level and Quality of Service
- ☐ Sustainability and Conservation
- ☒ Funding Availability
- ☒ Project Readiness
- ☒ Multiple Category Benefit and Bundling Opportunities

NEW OR EXISTING

- ☐ New Infrastructure or Facility
- ☒ Existing Infrastructure or Facility



PROJECT NUMBER 8832
PROJECT CATEGORY Transportation
PROJECT LOCATION Citywide
COUNCIL WARD All Wards

PROJECT DESCRIPTION
This project encompasses a variety of traffic improvements across Riverside: including the installation of signing and striping improvements for improved safety and traffic flow; refreshing faded striping; replacing damaged signs; modifying parking restrictions; repairing damaged guard rails; adjusting median noses; installing roadside and overhead signs to facilitate access to Riverside landmarks and attractions. All the above are a means to make neighborhood traffic improvements more responsive to resident requests.

PROJECT STATUS
This is an ongoing project to make roadway improvements throughout the City. The Traffic Division will continue to deploy similar solutions Citywide to enhance safety and operations.

OPERATING BUDGET IMPACT
This is a rehabilitation of existing infrastructure and will not require additional operational or maintenance costs.

PROJECT FUNDING OVERVIEW

Total Project Cost	Prior Years Funding	Five-Year Plan	Remaining Needed
Ongoing	$ 455,438	$ 375,000	Ongoing

TWO-YEAR BUDGET AND FIVE-YEAR PLAN

Funding Source	FY 2026/27	FY 2027/28	FY 2028/29	FY 2029/30	FY 2030/31	Total
230 - Gas Tax	$ 75,000	$ 75,000	$ 75,000	$ 75,000	$ 75,000	$ 375,000
Total Funding	**$ 75,000**	**$ 75,000**	**$ 75,000**	**$ 75,000**	**$ 75,000**	**$ 375,000**

MISSION BOULEVARD BRIDGE REPLACEMENT AT SANTA ANA RIVER

PRIORITIZATION CATEGORIES

- ☒ Risk to Health, Safety and Environment
- ☐ Regulatory or Mandated Requirements
- ☒ Asset Condition, Annual Recurring Costs, and Asset Longevity
- ☐ Community Investment and Economic Prosperity
- ☒ Level and Quality of Service
- ☐ Sustainability and Conservation
- ☒ Funding Availability
- ☒ Project Readiness
- ☒ Multiple Category Benefit and Bundling Opportunities

NEW OR EXISTING

- ☐ New Infrastructure or Facility
- ☒ Existing Infrastructure or Facility



PROJECT NUMBER 8629 **COUNCIL WARD** 1
PROJECT CATEGORY Transportation
PROJECT LOCATION Mission Boulevard Bridge over the Santa Ana River

PROJECT DESCRIPTION
This project provides for the reconstruction of the Mission Bridge spanning over 1,100 feet across the Santa Ana River between the cities of Riverside and Jurupa Valley. The new bridge will be constructed along the same alignment as the existing bridge but will be wider than the existing bridge allowing for bike lanes and a sidewalk for pedestrian use. The County of Riverside is taking the lead on this project and the City of Riverside will only be responsible to provide its fair share contribution to Riverside County to satisfy the local match requirements.

PROJECT STATUS
The project is managed by Riverside County. Construction began in Spring 2026 and expected to be completed in Winter 2029.

OPERATING BUDGET IMPACT
This is a rehabilitation of existing infrastructure and will not require additional operational or maintenance costs.

PROJECT FUNDING OVERVIEW			
Total Project Cost	Prior Years Funding	Five-Year Plan	Remaining Needed
$ 5,600,000	$ 3,400,000	$ 2,200,000	$ -

TWO-YEAR BUDGET AND FIVE-YEAR PLAN						
Funding Source	FY 2026/27	FY 2027/28	FY 2028/29	FY 2029/30	FY 2030/31	Total
432 - Measure A	$ -	$ 1,300,000	$ 900,000	$ -	$ -	$ 2,200,000
Total Funding	**$ -**	**$ 1,300,000**	**$ 900,000**	**$ -**	**$ -**	**$ 2,200,000**

MITCHELL AVENUE SIDEPATH PROJECT

PRIORITIZATION CATEGORIES

- ☒ Risk to Health, Safety and Environment
- ☐ Regulatory or Mandated Requirements
- ☐ Asset Condition, Annual Recurring Costs, and Asset Longevity
- ☒ Community Investment and Economic Prosperity
- ☐ Level and Quality of Service
- ☒ Sustainability and Conservation
- ☐ Funding Availability
- ☐ Project Readiness
- ☒ Multiple Category Benefit and Bundling Opportunities

NEW OR EXISTING

- ☐ New Infrastructure or Facility
- ☒ Existing Infrastructure or Facility



PROJECT NUMBER 4107 **COUNCIL WARD** 6, 7
PROJECT CATEGORY Transportation
PROJECT LOCATION Mitchell Avenue Trail between Campbell Avenue and Hole Avenue

PROJECT DESCRIPTION
This project will close the gap between two existing segments of a Class I side-path along Mitchell Avenue in the La Sierra and La Sierra Acres neighborhoods. It will add 0.94 miles of new Class I decomposed granite side-path along the west side of Mitchell Avenue, connecting the existing segments into a 1.97-mile continuous path from Arlington Avenue to Hole Avenue. This improvement will enhance connectivity, providing better access to parks, schools, and community amenities.

PROJECT STATUS
Construction is expected to commence in Summer 2026 with an anticipated completion date of late 2027.

OPERATING BUDGET IMPACT
The project will have minimal operating impacts and will be absorbed in the department's maintenance budget.

PROJECT FUNDING OVERVIEW

Total Project Cost	Prior Years Funding	Five-Year Plan	Remaining Needed
$ 7,465,000	$ 3,802,173	$ -	$ 3,662,827

TWO-YEAR BUDGET AND FIVE-YEAR PLAN

Funding Source	FY 2026/27	FY 2027/28	FY 2028/29	FY 2029/30	FY 2030/31	Total
N/A	$ -	$ -	$ -	$ -	$ -	$ -
Total Funding	**$ -**	**$ -**	**$ -**	**$ -**	**$ -**	**$ -**

MONTICELLO LANDSCAPE MAINTENANCE & FENCE

PRIORITIZATION CATEGORIES

- ☐ Risk to Health, Safety and Environment
- ☐ Regulatory or Mandated Requirements
- ☒ Asset Condition, Annual Recurring Costs, and Asset Longevity
- ☐ Community Investment and Economic Prosperity
- ☐ Level and Quality of Service
- ☒ Sustainability and Conservation
- ☒ Funding Availability
- ☒ Project Readiness
- ☒ Multiple Category Benefit and Bundling Opportunities

NEW OR EXISTING

- ☐ New Infrastructure or Facility
- ☒ Existing Infrastructure or Facility



PROJECT NUMBER 9270 **COUNCIL WARD** 3,5
PROJECT CATEGORY Transportation
PROJECT LOCATION Monticello Avenue from Colorado Avenue to Concord Avenue

PROJECT DESCRIPTION
This project will renovate the median on Monticello Avenue between Colorado Avenue and Concord Avenue. Work includes removing existing turf (turf scarification), grading the soil, and installing new, water-efficient landscaping and mulch. The project will also replace 1,600 linear feet of chain link fence. These improvements will enhance neighborhood aesthetics, replace aging assets, and significantly reduce water consumption, supporting the City's conservation goals.

PROJECT STATUS
This project is a component of a larger construction contract (Bid No. 8046) awarded on May 6, 2025. Work is scheduled to begin in Fall 2025 and is anticipated to be complete by Summer 2026.

OPERATING BUDGET IMPACT
This project will create significant annual water savings by replacing turf with water-efficient landscaping. This will result in a net decrease to the operating budget, as the water savings are anticipated to outweigh the new landscape maintenance costs.

PROJECT FUNDING OVERVIEW

Total Project Cost	Prior Years Funding	Five-Year Plan	Remaining Needed
$ 280,000	$ 280,000	$ -	$ -

TWO-YEAR BUDGET AND FIVE-YEAR PLAN

Funding Source	FY 2026/27	FY 2027/28	FY 2028/29	FY 2029/30	FY 2030/31	Total
N/A	$ -	$ -	$ -	$ -	$ -	$ -
Total Funding	**$ -**	**$ -**	**$ -**	**$ -**	**$ -**	**$ -**

NEW TRAFFIC SIGNAL INSTALLATIONS

PRIORITIZATION CATEGORIES

- ☒ Risk to Health, Safety and Environment
- ☐ Regulatory or Mandated Requirements
- ☒ Asset Condition, Annual Recurring Costs, and Asset Longevity
- ☐ Community Investment and Economic Prosperity
- ☒ Level and Quality of Service
- ☐ Sustainability and Conservation
- ☒ Funding Availability
- ☒ Project Readiness
- ☒ Multiple Category Benefit and Bundling Opportunities

NEW OR EXISTING

- ☒ New Infrastructure or Facility
- ☐ Existing Infrastructure or Facility



PROJECT NUMBER 8341
PROJECT CATEGORY Transportation
PROJECT LOCATION Citywide
COUNCIL WARD All Wards

PROJECT DESCRIPTION
The City of Riverside Traffic Division maintains a priority list for the installation of new traffic signals. Traffic signals are an important safety and efficiency improvement at intersections with sight distance challenges or significant motorist and pedestrian demand.

PROJECT STATUS
This is an ongoing project. Locations are selected from the Traffic Signal Priority List as funding becomes available. Individual signal installations typically move from design to completion throughout the fiscal year.

OPERATING BUDGET IMPACT
The operating budget impact of a new traffic signal is approximately $3,000 per year for each signal. The goal is to provide maintenance on 10-15 signals per year or approximately $30,000 - $50,000 per year.

PROJECT FUNDING OVERVIEW

Total Project Cost	Prior Years Funding	Five-Year Plan	Remaining Needed
Ongoing	$ 1,717,598	$ 2,500,000	Ongoing

TWO-YEAR BUDGET AND FIVE-YEAR PLAN

Funding Source	FY 2026/27	FY 2027/28	FY 2028/29	FY 2029/30	FY 2030/31	Total
432 - Measure A	$ 500,000	$ 500,000	$ 500,000	$ 500,000	$ 500,000	$ 2,500,000
Total Funding	**$ 500,000**	**$ 500,000**	**$ 500,000**	**$ 500,000**	**$ 500,000**	**$ 2,500,000**

NORTHSIDE TRAFFIC MITIGATION FEE

PRIORITIZATION CATEGORIES

- ☐ Risk to Health, Safety and Environment
- ☐ Regulatory or Mandated Requirements
- ☒ Asset Condition, Annual Recurring Costs, and Asset Longevity
- ☒ Community Investment and Economic Prosperity
- ☐ Level and Quality of Service
- ☒ Sustainability and Conservation
- ☐ Funding Availability
- ☐ Project Readiness
- ☒ Multiple Category Benefit and Bundling Opportunities

NEW OR EXISTING

- ☒ New Infrastructure or Facility
- ☐ Existing Infrastructure or Facility

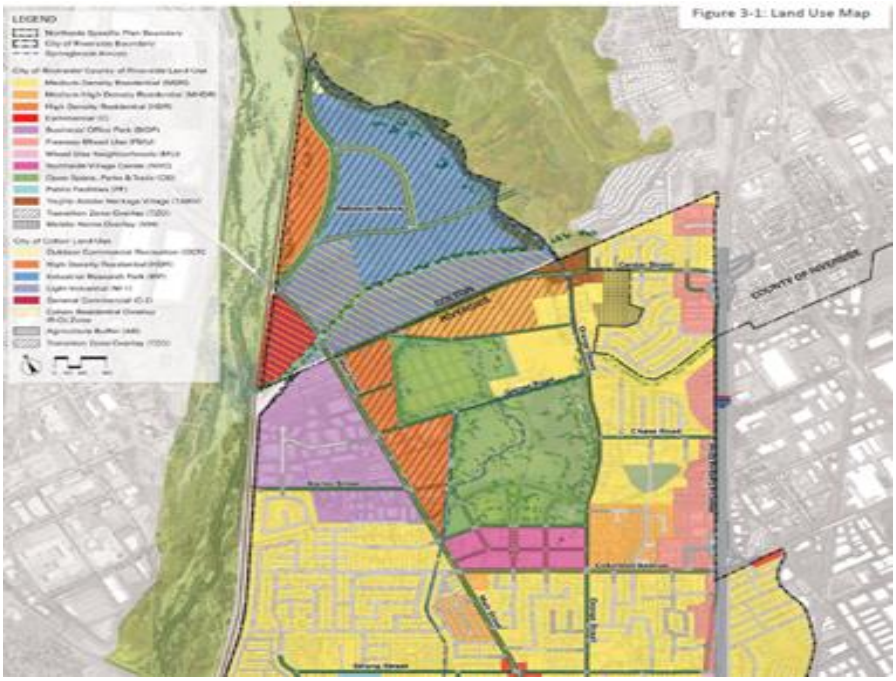

PROJECT NUMBER 9195 **COUNCIL WARD** All Wards
PROJECT CATEGORY Transportation
PROJECT LOCATION Various Areas near Colton and County of Riverside Territory

PROJECT DESCRIPTION
This project funds a detailed Traffic Mitigation Fee Program Analysis to support the Northside Specific Plan (NSP). Following the Program Environmental Impact Report (PEIR) for the NSP, which identified significant transportation impacts due to increased density, this study will determine fair-share development fees for future projects. These fees will fund necessary roadway, paving, and intersection improvements required to mitigate traffic impacts within the NSP area. The study ensures that new developments contribute proportionally to the infrastructure they utilize, maintaining the City's level of service.

PROJECT STATUS
This project is in the planning phase. There is currently no construction timeline for the resulting infrastructure. The administrative process to initiate a Request for Proposals (RFP) is scheduled to begin in Summer 2028.

OPERATING BUDGET IMPACT
The project or the account will collect a fair share of funds through the mitigation bank program. There will be no future operating impacts.

PROJECT FUNDING OVERVIEW			
Total Project Cost	Prior Years Funding	Five-Year Plan	Remaining Needed
$ 100,000	$ 100,000	$ -	$ -

TWO-YEAR BUDGET AND FIVE-YEAR PLAN						
Funding Source	FY 2026/27	FY 2027/28	FY 2028/29	FY 2029/30	FY 2030/31	Total
N/A	$ -	$ -	$ -	$ -	$ -	$ -
Total Funding	**$ -**	**$ -**	**$ -**	**$ -**	**$ -**	**$ -**

ORANGE STREET WIDENING IMPROVEMENT PROJECT

PRIORITIZATION CATEGORIES

- ☒ Risk to Health, Safety and Environment
- ☐ Regulatory or Mandated Requirements
- ☒ Asset Condition, Annual Recurring Costs, and Asset Longevity
- ☒ Community Investment and Economic Prosperity
- ☐ Level and Quality of Service
- ☒ Sustainability and Conservation
- ☐ Funding Availability
- ☐ Project Readiness
- ☒ Multiple Category Benefit and Bundling Opportunities

NEW OR EXISTING

- ☒ New Infrastructure or Facility
- ☐ Existing Infrastructure or Facility



PROJECT NUMBER 9180 **COUNCIL WARD** 1
PROJECT CATEGORY Transportation
PROJECT LOCATION Orange Street from Chase Road to Nash Street

PROJECT DESCRIPTION
This project will construct approximately 1,550 linear feet of curb and gutter and rehabilitate the asphalt concrete pavement on Orange Street from Chase Road to Nash Street. Additional work includes repairing the existing driveway and precast reinforced box culverts within the project limits. These specific drainage and roadway improvements are necessary to minimize historical flooding and improve the overall reliability of the infrastructure system.

PROJECT STATUS
Project design has not started. Construction is expected to begin in Fall 2026 with an estimated completion date of Summer 2029. Staff is currently preparing the scope for the initial design phase.

OPERATING BUDGET IMPACT
This is a rehabilitation of existing infrastructure and will not require additional operational or maintenance costs.

PROJECT FUNDING OVERVIEW

Total Project Cost	Prior Years Funding	Five-Year Plan	Remaining Needed
$ 830,000	$ 830,000	$ -	$ -

TWO-YEAR BUDGET AND FIVE-YEAR PLAN

Funding Source	FY 2026/27	FY 2027/28	FY 2028/29	FY 2029/30	FY 2030/31	Total
N/A	$ -	$ -	$ -	$ -	$ -	$ -
Total Funding	**$ -**	**$ -**	**$ -**	**$ -**	**$ -**	**$ -**

PARKING STRING LIGHTING

PRIORITIZATION CATEGORIES

- ☒ Risk to Health, Safety and Environment
- ☐ Regulatory or Mandated Requirements
- ☐ Asset Condition, Annual Recurring Costs, and Asset Longevity
- ☒ Community Investment and Economic Prosperity
- ☒ Level and Quality of Service
- ☐ Sustainability and Conservation
- ☒ Funding Availability
- ☒ Project Readiness
- ☒ Multiple Category Benefit and Bundling Opportunities

NEW OR EXISTING

- ☒ New Infrastructure or Facility
- ☐ Existing Infrastructure or Facility



PROJECT NUMBER 9298
PROJECT CATEGORY Transportation
PROJECT LOCATION Various
COUNCIL WARD 1

PROJECT DESCRIPTION
This project installs new decorative, energy-efficient LED string lighting systems to enhance public safety and improve the aesthetic appeal of the downtown core. The lighting will be installed over metered parking spaces in three key locations: Main Street (between Fifth and Sixth Streets), Fifth Street (between Main and Orange Streets), and the Cheech Marin Center for Chicano Art & Culture parking lot. The scope includes constructing foundation poles and installing the lighting fixtures, which have an expected service life of 15-20 years. This investment supports local businesses by creating a more inviting atmosphere for residents and visitors.

PROJECT STATUS
The project is currently in the pre-construction phase, having been executed as part of the larger Bid 8046 contract awarded by City Council on May 6, 2025. Construction is anticipated to begin Winter 2025 and is estimated to reach final completion Fall 2026.

OPERATING BUDGET IMPACT
There will be no significant operating impact. Maintenance and operations will be absorbed in the current Public Works maintenance budget.

PROJECT FUNDING OVERVIEW

Total Project Cost	Prior Years Funding	Five-Year Plan	Remaining Needed
$ 861,951	$ 851,904	$ 10,047	-

TWO-YEAR BUDGET AND FIVE-YEAR PLAN

Funding Source	FY 2026/27	FY 2027/28	FY 2028/29	FY 2029/30	FY 2030/31	Total
570 - Public Parking	$ 10,047	$ -	$ -	$ -	$ -	$ 10,047
Total Funding	**$ 10,047**	**$ -**	**$ -**	**$ -**	**$ -**	**$ 10,047**

PAVEMENT REHABILITATION & IMPROVEMENTS

PRIORITIZATION CATEGORIES

- ☒ Risk to Health, Safety and Environment
- ☒ Regulatory or Mandated Requirements
- ☐ Asset Condition, Annual Recurring Costs, and Asset Longevity
- ☐ Community Investment and Economic Prosperity
- ☒ Level and Quality of Service
- ☐ Sustainability and Conservation
- ☒ Funding Availability
- ☒ Project Readiness
- ☒ Multiple Category Benefit and Bundling Opportunities

NEW OR EXISTING

- ☒ New Infrastructure or Facility
- ☒ Existing Infrastructure or Facility



PROJECT NUMBER 9027
PROJECT CATEGORY Transportation
PROJECT LOCATION Citywide
COUNCIL WARD All Wards

PROJECT DESCRIPTION
This program provides the asphalt concrete pavement rehabilitation of arterial and minor streets throughout the City. This program also includes the removal and reconstruction of non-compliant pedestrian ramps and repair of curbs, gutters, driveways, and sidewalks adjacent to the street to provide proper drainage, Americans with Disabilities Act (ADA) compliance, and better ride quality. Other improvements will include pedestrian improvements, including a new sidewalk and minor widening when required.

PROJECT STATUS
This is an ongoing project to complete pavement rehabilitation of arterial and minor streets throughout the City on an as-needed basis. The funding has been approved and set aside.

OPERATING BUDGET IMPACT
This is a rehabilitation of existing infrastructure and will not require additional operational or maintenance costs.

PROJECT FUNDING OVERVIEW

Total Project Cost	Prior Years Funding	Five-Year Plan	Remaining Needed
Ongoing	$ 71,864,226	$ 39,100,000	Ongoing

TWO-YEAR BUDGET AND FIVE-YEAR PLAN

Funding Source	FY 2026/27	FY 2027/28	FY 2028/29	FY 2029/30	FY 2030/31	Total
420 - Measure Z Capital	$ 8,200,000	$ 7,700,000	$ 7,200,000	$ 8,000,000	$ 8,000,000	$ 39,100,000
Total Funding	**$ 8,200,000**	**$ 7,700,000**	**$ 7,200,000**	**$ 8,000,000**	**$ 8,000,000**	**$ 39,100,000**

PEDESTRIAN RAMPS

PRIORITIZATION CATEGORIES

- ☒ Risk to Health, Safety and Environment
- ☒ Regulatory or Mandated Requirements
- ☒ Asset Condition, Annual Recurring Costs, and Asset Longevity
- ☐ Community Investment and Economic Prosperity
- ☒ Level and Quality of Service
- ☐ Sustainability and Conservation
- ☒ Funding Availability
- ☒ Project Readiness
- ☒ Multiple Category Benefit and Bundling Opportunities

NEW OR EXISTING

- ☐ New Infrastructure or Facility
- ☒ Existing Infrastructure or Facility



PROJECT NUMBER 8887
PROJECT CATEGORY Transportation
PROJECT LOCATION Citywide
COUNCIL WARD All Wards

PROJECT DESCRIPTION
This project provides for the construction of new pedestrian ramps and detectable warning surfaces along arterial and collector streets to provide improved pedestrian access to sidewalks.

PROJECT STATUS
This is an ongoing project to construct pedestrian ramps and detectable warning surfaces. Needs are evaluated on an annual basis and projects are executed based on those ranked needs.

OPERATING BUDGET IMPACT
This is a rehabilitation of existing infrastructure and will not require additional operational or maintenance costs.

PROJECT FUNDING OVERVIEW

Total Project Cost	Prior Years Funding	Five-Year Plan	Remaining Needed
Ongoing	$ 3,452,350	$ 1,500,000	Ongoing

TWO-YEAR BUDGET AND FIVE-YEAR PLAN

Funding Source	FY 2026/27	FY 2027/28	FY 2028/29	FY 2029/30	FY 2030/31	Total
230 - Gas Tax	$ 300,000	$ 300,000	$ 300,000	$ 300,000	$ 300,000	$ 1,500,000
Total Funding	**$ 300,000**	**$ 300,000**	**$ 300,000**	**$ 300,000**	**$ 300,000**	**$ 1,500,000**

RIVERSIDE NEIGHBORHOOD SAFETY

PRIORITIZATION CATEGORIES

- ☒ Risk to Health, Safety and Environment
- ☐ Regulatory or Mandated Requirements
- ☒ Asset Condition, Annual Recurring Costs, and Asset Longevity
- ☒ Community Investment and Economic Prosperity
- ☒ Level and Quality of Service
- ☒ Sustainability and Conservation
- ☒ Funding Availability
- ☒ Project Readiness
- ☒ Multiple Category Benefit and Bundling Opportunities

NEW OR EXISTING

- ☐ New Infrastructure or Facility
- ☒ Existing Infrastructure or Facility



PROJECT NUMBER 2821
PROJECT CATEGORY Transportation
PROJECT LOCATION Citywide
COUNCIL WARD 5,6

PROJECT DESCRIPTION
This project provides comprehensive safety improvements for vulnerable road users within the area bounded by Arlington Avenue, Adams Street, La Sierra Avenue, and the SR-91 Freeway. Improvements include 16.2 miles of new bike paths, buffered lanes, and routes; safety enhancements at 85 signalized and 8 unsignalized intersections, including new high-visibility crosswalks, ADA ramps, and audible pedestrian buttons; 0.6 miles of new sidewalks; and 0.9 miles of traffic calming treatments. This project addresses high-risk areas in a disadvantaged community to decrease traffic collisions, encourage active transportation, and boost connectivity to local schools, parks, and employment centers.

PROJECT STATUS
This project is in the planning and design phase following the acceptance of a Safe Streets For All grant in February 2025. Design and public outreach will occur through 2026, with construction expected to begin in 2027. The estimated completion for all improvements is Fall 2030.

OPERATING BUDGET IMPACT
This project is not anticipated to have a significant operating budget impact.

PROJECT FUNDING OVERVIEW			
Total Project Cost	Prior Years Funding	Five-Year Plan	Remaining Needed
$ 8,310,000	$ 8,310,000	$ -	$ -

TWO-YEAR BUDGET AND FIVE-YEAR PLAN						
Funding Source	FY 2026/27	FY 2027/28	FY 2028/29	FY 2029/30	FY 2030/31	Total
N/A	$ -	$ -	$ -	$ -	$ -	$ -
Total Funding	**$ -**	**$ -**	**$ -**	**$ -**	**$ -**	**$ -**

RIVERSIDE SAFE ROUTES TO SCHOOL PLAN

PRIORITIZATION CATEGORIES

- ☒ Risk to Health, Safety and Environment
- ☐ Regulatory or Mandated Requirements
- ☐ Asset Condition, Annual Recurring Costs, and Asset Longevity
- ☒ Community Investment and Economic Prosperity
- ☐ Level and Quality of Service
- ☒ Sustainability and Conservation
- ☐ Funding Availability
- ☒ Project Readiness
- ☒ Multiple Category Benefit and Bundling Opportunities

NEW OR EXISTING

- ☒ New Infrastructure or Facility
- ☒ Existing Infrastructure or Facility

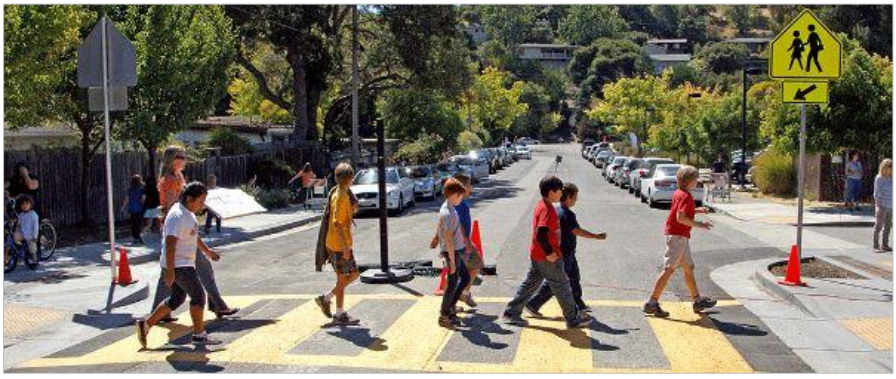

PROJECT NUMBER 4106
PROJECT CATEGORY Transportation
PROJECT LOCATION Citywide
COUNCIL WARD All Wards

PROJECT DESCRIPTION
The purpose of this project is to develop Individualized Pedestrian & Bike Safety Action Plans & Safe Routes To School Reports for each of the fifty (50) K-8 public schools citywide.

PROJECT STATUS
The consultant contract has been awarded and the project is in progress. The estimated project completion is Summer 2026.

OPERATING BUDGET IMPACT
Upon completion of the project, there are no ongoing operating impacts as this is a plan-only project and not a construction project.

PROJECT FUNDING OVERVIEW

Total Project Cost	Prior Years Funding	Five-Year Plan	Remaining Needed
$ 868,993	$ 868,993	$ -	$ -

TWO-YEAR BUDGET AND FIVE-YEAR PLAN

Funding Source	FY 2026/27	FY 2027/28	FY 2028/29	FY 2029/30	FY 2030/31	Total
N/A	$ -	$ -	$ -	$ -	$ -	$ -
Total Funding	**$ -**	**$ -**	**$ -**	**$ -**	**$ -**	**$ -**

RMRA REHABILITATION & TRAFFIC IMPROVEMENTS

PRIORITIZATION CATEGORIES

- ☒ Risk to Health, Safety and Environment
- ☒ Regulatory or Mandated Requirements
- ☒ Asset Condition, Annual Recurring Costs, and Asset Longevity
- ☒ Community Investment and Economic Prosperity
- ☒ Level and Quality of Service
- ☒ Sustainability and Conservation
- ☒ Funding Availability
- ☐ Project Readiness
- ☒ Multiple Category Benefit and Bundling Opportunities

NEW OR EXISTING

- ☐ New Infrastructure or Facility
- ☒ Existing Infrastructure or Facility



PROJECT NUMBER 9151
PROJECT CATEGORY Transportation
PROJECT LOCATION Citywide
COUNCIL WARD All Wards

PROJECT DESCRIPTION
This project provides supplemental funding for the maintenance and improvement of the City's transportation and drainage infrastructure. Key focus areas include road rehabilitation, safety projects, and railroad grade separations to enhance regional mobility. The project also supports traffic control devices, transit facilities, and "Complete Street" components designed for pedestrians and bicyclists, such as ADA-compliant ramps and bike lanes. Additionally, funding is directed toward critical drainage and stormwater projects to minimize localized flooding. By leveraging supplemental revenue, the City can address infrastructure deficits across multiple categories and ensure the long-term reliability of its assets.

PROJECT STATUS
This is an ongoing project funded by Gas Tax dollars. It is executed throughout the year and evaluated on an annual basis. Projects are ranked by greatest need and cycled through as funds become available.

OPERATING BUDGET IMPACT
This is a rehabilitation of existing infrastructure and will not require additional operational or maintenance costs.

PROJECT FUNDING OVERVIEW

Total Project Cost	Prior Years Funding	Five-Year Plan	Remaining Needed
Ongoing	$ 37,087,318	$ 48,560,828	Ongoing

TWO-YEAR BUDGET AND FIVE-YEAR PLAN

Funding Source	FY 2026/27	FY 2027/28	FY 2028/29	FY 2029/30	FY 2030/31	Total
230 - Gas Tax	$ 9,412,022	$ 9,357,623	$ 9,638,352	$ 9,927,503	$ 10,225,328	$ 48,560,828
Total Funding	**$ 9,412,022**	**$ 9,357,623**	**$ 9,638,352**	**$ 9,927,503**	**$ 10,225,328**	**$ 48,560,828**

SIDEWALK FRONTING PATRICIA BEATTY

PRIORITIZATION CATEGORIES

- ☒ Risk to Health, Safety and Environment
- ☐ Regulatory or Mandated Requirements
- ☒ Asset Condition, Annual Recurring Costs, and Asset Longevity
- ☒ Community Investment and Economic Prosperity
- ☒ Level and Quality of Service
- ☒ Sustainability and Conservation
- ☐ Funding Availability
- ☐ Project Readiness
- ☒ Multiple Category Benefit and Bundling Opportunities

NEW OR EXISTING

- ☒ New Infrastructure or Facility
- ☐ Existing Infrastructure or Facility



PROJECT NUMBER 9143 **COUNCIL WARD** 1
PROJECT CATEGORY Transportation
PROJECT LOCATION Southerly frontage of Patricia Beatty Elementary School

PROJECT DESCRIPTION
The project will install an approximately 210-foot section of sidewalk and a small retaining wall to provide a walkway for parents and students near Patricia Beatty Elementary School. The project will additionally install a rectangular rapid flashing beacon-lighted pedestrian sign that connects to Patricia Beatty's Easterly walkway. The project is intended to provide a safer walking option for students exiting Patricia Beatty Elementary School.

PROJECT STATUS
The project is part of a larger sidewalk project. Construction is in progress and estimated completion is Summer 2026.

OPERATING BUDGET IMPACT
There will be no significant operating impact. Maintenance and operations will be absorbed in the current Public Works maintenance budget.

PROJECT FUNDING OVERVIEW

Total Project Cost	Prior Years Funding	Five-Year Plan	Remaining Needed
$ 188,636	$ 188,636	$ -	$ -

TWO-YEAR BUDGET AND FIVE-YEAR PLAN

Funding Source	FY 2026/27	FY 2027/28	FY 2028/29	FY 2029/30	FY 2030/31	Total
N/A	$ -	$ -	$ -	$ -	$ -	$ -
Total Funding	**$ -**	**$ -**	**$ -**	**$ -**	**$ -**	**$ -**

SIDEWALK REPAIR PROGRAM

PRIORITIZATION CATEGORIES

- ☒ Risk to Health, Safety and Environment
- ☒ Regulatory or Mandated Requirements
- ☐ Asset Condition, Annual Recurring Costs, and Asset Longevity
- ☐ Community Investment and Economic Prosperity
- ☒ Level and Quality of Service
- ☐ Sustainability and Conservation
- ☒ Funding Availability
- ☒ Project Readiness
- ☒ Multiple Category Benefit and Bundling Opportunities

NEW OR EXISTING

- ☐ New Infrastructure or Facility
- ☒ Existing Infrastructure or Facility



PROJECT NUMBER 8886
PROJECT CATEGORY Transportation
PROJECT LOCATION Citywide
COUNCIL WARD All Wards

PROJECT DESCRIPTION
This program provides the repair of concrete sidewalks throughout the City. The program will remove and reconstruct sidewalks that are damaged and/or uplifted, mostly from tree roots.

PROJECT STATUS
This is an ongoing project to repair sidewalks throughout the City and projects are evaluated annually on an as-needed basis.

OPERATING BUDGET IMPACT
This is a rehabilitation of existing infrastructure and will not require additional operational or maintenance costs.

PROJECT FUNDING OVERVIEW

Total Project Cost	Prior Years Funding	Five-Year Plan	Remaining Needed
Ongoing	$ 5,872,235	$ 10,500,000	Ongoing

TWO-YEAR BUDGET AND FIVE-YEAR PLAN

Funding Source	FY 2026/27	FY 2027/28	FY 2028/29	FY 2029/30	FY 2030/31	Total
230 - Gas Tax	$ 300,000	$ 300,000	$ 300,000	$ 300,000	$ 300,000	$ 1,500,000
420 - Measure Z Capital	600,000	600,000	600,000	600,000	600,000	3,000,000
432 - Measure A	4,000,000	2,000,000	-	-	-	6,000,000
Total Funding	**$ 4,900,000**	**$ 2,900,000**	**$ 900,000**	**$ 900,000**	**$ 900,000**	**$ 10,500,000**

SIDEWALK/TRAIL CONSTRUCTION

PRIORITIZATION CATEGORIES

- ☒ Risk to Health, Safety and Environment
- ☒ Regulatory or Mandated Requirements
- ☐ Asset Condition, Annual Recurring Costs, and Asset Longevity
- ☐ Community Investment and Economic Prosperity
- ☒ Level and Quality of Service
- ☐ Sustainability and Conservation
- ☒ Funding Availability
- ☒ Project Readiness
- ☒ Multiple Category Benefit and Bundling Opportunities

NEW OR EXISTING

- ☐ New Infrastructure or Facility
- ☒ Existing Infrastructure or Facility



PROJECT NUMBER 8885
PROJECT CATEGORY Transportation
PROJECT LOCATION Citywide
COUNCIL WARD All Wards

PROJECT DESCRIPTION
This project provides for the construction of concrete sidewalks and trails to provide improved pedestrian access and circulation throughout the City. The construction of new sidewalks or trails reduces the risk of potential injury to pedestrians.

PROJECT STATUS
This is an ongoing project to construct a sidewalk and trails. Projects are evaluated annually and are constructed on an as-needed basis.

OPERATING BUDGET IMPACT
This is a rehabilitation of existing infrastructure and will not require additional operational or maintenance costs.

PROJECT FUNDING OVERVIEW

Total Project Cost	Prior Years Funding	Five-Year Plan	Remaining Needed
Ongoing	$ 1,727,631	$ 1,500,000	Ongoing

TWO-YEAR BUDGET AND FIVE-YEAR PLAN

Funding Source	FY 2026/27	FY 2027/28	FY 2028/29	FY 2029/30	FY 2030/31	Total
230 - Gas Tax	$ 300,000	$ 300,000	$ 300,000	$ 300,000	$ 300,000	$ 1,500,000
Total Funding	**$ 300,000**	**$ 300,000**	**$ 300,000**	**$ 300,000**	**$ 300,000**	**$ 1,500,000**

SOUTH MAIN COMPLETE STREETS

PRIORITIZATION CATEGORIES

- ☒ Risk to Health, Safety and Environment
- ☐ Regulatory or Mandated Requirements
- ☐ Asset Condition, Annual Recurring Costs, and Asset Longevity
- ☒ Community Investment and Economic Prosperity
- ☒ Level and Quality of Service
- ☒ Sustainability and Conservation
- ☐ Funding Availability
- ☐ Project Readiness
- ☐ Multiple Category Benefit and Bundling Opportunities

NEW OR EXISTING

- ☒ New Infrastructure or Facility
- ☒ Existing Infrastructure or Facility

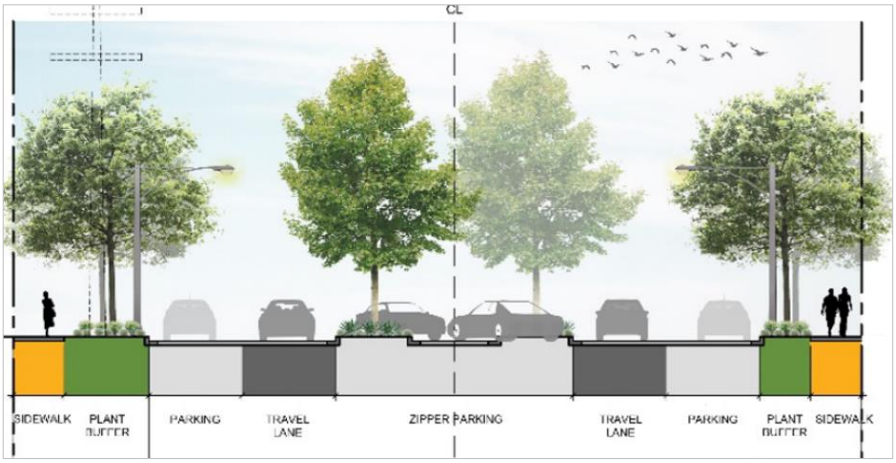

PROJECT NUMBER 2808 **COUNCIL WARD** 1
PROJECT CATEGORY Transportation
PROJECT LOCATION Main Street from SR-60 to Third Street

PROJECT DESCRIPTION
This project will implement a road diet along Main Street from the 60 Freeway to Third Street, reducing travel lanes from four to two to improve safety and accommodate other transportation modes by reallocating roadway space for pedestrians, bicyclists, and enhanced traffic flow. Improvements include zipper parking, new concrete sidewalks, pedestrian ramps, speed feedback signs, rectangular rapid flashing beacons, planters, and diagonal median parking. The project also includes a bundled component, which integrates multiple smaller safety-related improvements to enhance pedestrian and traffic safety throughout the corridor. This project aligns with the adopted circulation element of the Northside Specific Plan.

PROJECT STATUS
The grant was approved by City Council on February 6, 2024. Design began in Spring 2025 with construction anticipated to finish in Fall 2027.

OPERATING BUDGET IMPACT
Operating impacts are currently unknown. With construction finishing in Fall 2027, the City will evaluate the impacts and budget accordingly nearer to completion in Fiscal Year 2027/28.

PROJECT FUNDING OVERVIEW

Total Project Cost	Prior Years Funding	Five-Year Plan	Remaining Needed
$13,481,009	$ 13,481,009	$ -	$ -

TWO-YEAR BUDGET AND FIVE-YEAR PLAN

Funding Source	FY 2026/27	FY 2027/28	FY 2028/29	FY 2029/30	FY 2030/31	Total
N/A	$ -	$ -	$ -	$ -	$ -	$ -
Total Funding	**$ -**	**$ -**	**$ -**	**$ -**	**$ -**	**$ -**

SPEED HUMP TRAFFIC CALMING PROGRAM

PRIORITIZATION CATEGORIES

- ☒ Risk to Health, Safety and Environment
- ☐ Regulatory or Mandated Requirements
- ☐ Asset Condition, Annual Recurring Costs, and Asset Longevity
- ☒ Community Investment and Economic Prosperity
- ☒ Level and Quality of Service
- ☐ Sustainability and Conservation
- ☐ Funding Availability
- ☐ Project Readiness
- ☐ Multiple Category Benefit and Bundling Opportunities

NEW OR EXISTING

- ☒ New Infrastructure or Facility
- ☐ Existing Infrastructure or Facility



PROJECT NUMBER 9272 **COUNCIL WARD** All Wards
PROJECT CATEGORY Transportation
PROJECT LOCATION Various Locations

PROJECT DESCRIPTION

This project reinstates speed humps as a secondary traffic calming measure within the Neighborhood Traffic Management Program (NTMP) to enhance residential safety. Installations are targeted for 25 MPH local streets meeting specific criteria, including a minimum volume of 750 daily vehicles and an 85th percentile speed of at least 37 MPH. By addressing areas where 15% of drivers significantly exceed the limit, the project mitigates the Risk to Health, Safety and Environment. Prioritization follows technical data, land use, community support, and collision history to ensure equitable distribution across Wards. These measures provide a direct public benefit by reducing neighborhood speeds and improving the level of service.

PROJECT STATUS

The Speed Hump program is underway with speed humps being installed on Kilarnock Way, Green Orchard & Ramona, and Maude Street. The program is on-going and will continue through FY 25-26.

OPERATING BUDGET IMPACT

There will be no additional operating costs as the speed humps will be absorbed in the street maintenance budget.

PROJECT FUNDING OVERVIEW

Total Project Cost	Prior Years Funding	Five-Year Plan	Remaining Needed
Ongoing	$ 100,000	$ -	$ Ongoing

TWO-YEAR BUDGET AND FIVE-YEAR PLAN

Funding Source	FY 2026/27	FY 2027/28	FY 2028/29	FY 2029/30	FY 2030/31	Total
N/A	$ -	$ -	$ -	$ -	$ -	$ -
Total Funding	**$ -**	**$ -**	**$ -**	**$ -**	**$ -**	**$ -**

SPEED LIMIT REDUCTION PROGRAM

PRIORITIZATION CATEGORIES

- ☒ Risk to Health, Safety and Environment
- ☒ Regulatory or Mandated Requirements
- ☐ Asset Condition, Annual Recurring Costs, and Asset Longevity
- ☒ Community Investment and Economic Prosperity
- ☐ Level and Quality of Service
- ☒ Sustainability and Conservation
- ☐ Funding Availability
- ☐ Project Readiness
- ☒ Multiple Category Benefit and Bundling Opportunities

NEW OR EXISTING

- ☒ New Infrastructure or Facility
- ☐ Existing Infrastructure or Facility



PROJECT NUMBER 2809 **COUNCIL WARD** 1
PROJECT CATEGORY Transportation
PROJECT LOCATION Downtown, along Main Street

PROJECT DESCRIPTION
This project will implement pedestrian and bicycle safety enhancements on Main Street from the State Route 60 Freeway to 3rd Street. Key improvements include a road diet reducing travel lanes to two, the installation of zipper parking, curb extensions, and upgraded sidewalks with Americans with Disabilities Act compliant ramps. Safety features include bike signage, striping, speed feedback signs, and Rectangular Rapid Flashing Beacons. Within a half-mile radius, the project adds high-visibility crosswalks and audible pedestrian push-button systems. These upgrades aim to reduce traffic speeds, improve connectivity between the downtown core and northern neighborhoods, and enhance accessibility for all users.

PROJECT STATUS
The grant was approved by City Council on February 6, 2024. Project entails, traffic studies and preparing construction documents. The design phase began in Spring 2025 and is estimated to finish in Fall 2027.

OPERATING BUDGET IMPACT
This project should not incur any additional operating and maintenance costs to the budget once complete.

PROJECT FUNDING OVERVIEW

Total Project Cost	Prior Years Funding	Five-Year Plan	Remaining Needed
$400,000	$ 400,000	$ -	$ -

TWO-YEAR BUDGET AND FIVE-YEAR PLAN

Funding Source	FY 2026/27	FY 2027/28	FY 2028/29	FY 2029/30	FY 2030/31	Total
N/A	$ -	$ -	$ -	$ -	$ -	$ -
Total Funding	**$ -**	**$ -**	**$ -**	**$ -**	**$ -**	**$ -**

STOVER AVENUE SIDEWALK PROJECT

PRIORITIZATION CATEGORIES

- ☒ Risk to Health, Safety and Environment
- ☐ Regulatory or Mandated Requirements
- ☐ Asset Condition, Annual Recurring Costs, and Asset Longevity
- ☒ Community Investment and Economic Prosperity
- ☒ Level and Quality of Service
- ☐ Sustainability and Conservation
- ☐ Funding Availability
- ☐ Project Readiness
- ☐ Multiple Category Benefit and Bundling Opportunities

NEW OR EXISTING

- ☒ New Infrastructure or Facility
- ☐ Existing Infrastructure or Facility



PROJECT NUMBER 9914 **COUNCIL WARD** 7
PROJECT CATEGORY Transportation
PROJECT LOCATION Stover Ave between Fury Dr and Eagle Rock Dr

PROJECT DESCRIPTION
This project proposes to construct 2,090 linear feet of 6-feet wide ADA compliant sidewalk on one side of Stover Avenue from Fury Drive to Eagle Rock Drive, together with new curb, gutter, and ADA access ramps.

PROJECT STATUS
The project is in the design phase but is temporarily on hold pending approval to modify the street cross-section from the General Plan. Request for Proposal and Construction is pending release of hold.

OPERATING BUDGET IMPACT
This project is not anticipated to have a significant operating budget impact.

PROJECT FUNDING OVERVIEW

Total Project Cost	Prior Years Funding	Five-Year Plan	Remaining Needed
$1,189,000	$ 1,189,000	$ -	$ -

TWO-YEAR BUDGET AND FIVE-YEAR PLAN

Funding Source	FY 2026/27	FY 2027/28	FY 2028/29	FY 2029/30	FY 2030/31	Total
N/A	$ -	$ -	$ -	$ -	$ -	$ -
Total Funding	**$ -**	**$ -**	**$ -**	**$ -**	**$ -**	**$ -**

TRAFFIC DETECTION REPLACEMENT PROGRAM

PRIORITIZATION CATEGORIES

- ☒ Risk to Health, Safety and Environment
- ☒ Regulatory or Mandated Requirements
- ☐ Asset Condition, Annual Recurring Costs, and Asset Longevity
- ☒ Community Investment and Economic Prosperity
- ☒ Level and Quality of Service
- ☒ Sustainability and Conservation
- ☐ Funding Availability
- ☐ Project Readiness
- ☒ Multiple Category Benefit and Bundling Opportunities

NEW OR EXISTING

- ☐ New Infrastructure or Facility
- ☒ Existing Infrastructure or Facility



PROJECT NUMBER 9215
PROJECT CATEGORY Transportation
PROJECT LOCATION Citywide
COUNCIL WARD All Wards

PROJECT DESCRIPTION
This ongoing program replaces faulty or damaged traffic signal detection systems citywide to maintain traffic flow. Signal detection systems are critical for minimizing signal cycle times; when they fail, it removes the efficiencies of the traffic management system, leading to increased congestion. Primary causes of failure include reaching the end of the useful life cycle, damage from construction projects, or internal electronic failure. As equipment breaks down, it creates slower, less effective traffic movement throughout the City. By replacing these systems on an as-needed basis, the project restores operational reliability, reduces public safety risks, and ensures a high quality of service for the traveling public.

PROJECT STATUS
This is an ongoing project. Faulty detection systems are replaced throughout the year as they are identified through routine maintenance inspections, 311 service requests, or reported construction-related damage.

OPERATING BUDGET IMPACT
This is a rehabilitation of existing infrastructure and will not require additional operational or maintenance costs.

PROJECT FUNDING OVERVIEW

Total Project Cost	Prior Years Funding	Five-Year Plan	Remaining Needed
Ongoing	$ 100,000	$ 125,000	Ongoing

TWO-YEAR BUDGET AND FIVE-YEAR PLAN

Funding Source	FY 2026/27	FY 2027/28	FY 2028/29	FY 2029/30	FY 2030/31	Total
432 - Measure A	$ 25,000	$ 25,000	$ 25,000	$ 25,000	$ 25,000	$ 125,000
Total Funding	**$ 25,000**	**$ 25,000**	**$ 25,000**	**$ 25,000**	**$ 25,000**	**$ 125,000**

TRAFFIC MANAGEMENT CENTER

PRIORITIZATION CATEGORIES

- ☒ Risk to Health, Safety and Environment
- ☐ Regulatory or Mandated Requirements
- ☐ Asset Condition, Annual Recurring Costs, and Asset Longevity
- ☐ Community Investment and Economic Prosperity
- ☒ Level and Quality of Service
- ☐ Sustainability and Conservation
- ☒ Funding Availability
- ☒ Project Readiness
- ☒ Multiple Category Benefit and Bundling Opportunities

NEW OR EXISTING

- ☐ New Infrastructure or Facility
- ☒ Existing Infrastructure or Facility



PROJECT NUMBER 5931 **COUNCIL WARD** 1
PROJECT CATEGORY Transportation
PROJECT LOCATION City Hall 4th Floor, all signalized intersections

PROJECT DESCRIPTION
The Traffic Management Center (TMC) serves as the central hub for the City's camera and connected traffic signal infrastructure, managing traffic operations citywide. This project supports the TMC's ability to monitor real-time conditions from a centralized location and remotely adjust signal timing and synchronization plans based on direct observations. The TMC is a critical component in responding to 311 service requests and allows engineering staff to proactively develop timing plans that move traffic efficiently throughout Riverside. These activities improve the level and quality of service by reducing congestion and enhancing vehicular mobility. By optimizing existing signal assets, the project extends the useful life of the City's transportation network.

PROJECT STATUS
This is an ongoing operational project. Monitoring and timing adjustments occur daily in real-time traffic. Staff continuously updates signal coordination plans as new CCTV locations are integrated into the Traffic Management Center.

OPERATING BUDGET IMPACT
This is a rehabilitation of existing infrastructure and will not require additional operational or maintenance costs.

PROJECT FUNDING OVERVIEW			
Total Project Cost	**Prior Years Funding**	**Five-Year Plan**	**Remaining Needed**
Ongoing	**$ 2,192,009**	**$ 250,000**	**Ongoing**

TWO-YEAR BUDGET AND FIVE-YEAR PLAN						
Funding Source	**FY 2026/27**	**FY 2027/28**	**FY 2028/29**	**FY 2029/30**	**FY 2030/31**	**Total**
432 - Measure A	$ 50,000	$ 50,000	$ 50,000	$ 50,000	$ 50,000	$ 250,000
Total Funding	**$ 50,000**	**$ 50,000**	**$ 50,000**	**$ 50,000**	**$ 50,000**	**$ 250,000**

TRAFFIC SIGNAL BACKPLATES, LPI, & MISSION INN BARRIER

PRIORITIZATION CATEGORIES

- ☒ Risk to Health, Safety and Environment
- ☐ Regulatory or Mandated Requirements
- ☐ Asset Condition, Annual Recurring Costs, and Asset Longevity
- ☐ Community Investment and Economic Prosperity
- ☒ Level and Quality of Service
- ☐ Sustainability and Conservation
- ☒ Funding Availability
- ☐ Project Readiness
- ☐ Multiple Category Benefit and Bundling Opportunities

NEW OR EXISTING

- ☒ New Infrastructure or Facility
- ☒ Existing Infrastructure or Facility



PROJECT NUMBER 9253 **COUNCIL WARD** All Wards
PROJECT CATEGORY Transportation
PROJECT LOCATION All signalized intersections & Mission Inn Ave from Redwood Drive to Scout Lane

PROJECT DESCRIPTION
This project has multiple phases: 1) Installation of a raised median barrier and enhanced high friction surface treatment (HFST) surfacing along Mission Inn Avenue between Redwood Drive and Scout Lane to reduce the number of collisions; 2) Installation of retro-reflective signal backplates on all traffic signalized intersection locations citywide; 3) Implementation of Leading Pedestrian Interval (LPI) timing at all signalized crosswalk locations citywide, which increases safety by giving pedestrians and cyclists 3-7 seconds to start their path across the street.

PROJECT STATUS
The project received the official notification for the award of grant funds in July 2023. The design phase began in Spring 2024 and is to be completed by Summer 2027.

OPERATING BUDGET IMPACT
There will be no significant operating impact. Maintenance and operations will be absorbed in the current Public Works maintenance budget.

PROJECT FUNDING OVERVIEW

Total Project Cost	Prior Years Funding	Five-Year Plan	Remaining Needed
$ 9,418,200	$ 9,418,200	$ -	$ -

TWO-YEAR BUDGET AND FIVE-YEAR PLAN

Funding Source	FY 2026/27	FY 2027/28	FY 2028/29	FY 2029/30	FY 2030/31	Total
N/A	$ -	$ -	$ -	$ -	$ -	$ -
Total Funding	**$ -**	**$ -**	**$ -**	**$ -**	**$ -**	**$ -**

TRAFFIC SIGNAL COMMUNICATIONS EQUIPMENT

PRIORITIZATION CATEGORIES

- ☒ Risk to Health, Safety and Environment
- ☒ Regulatory or Mandated Requirements
- ☒ Asset Condition, Annual Recurring Costs, and Asset Longevity
- ☒ Community Investment and Economic Prosperity
- ☒ Level and Quality of Service
- ☒ Sustainability and Conservation
- ☐ Funding Availability
- ☐ Project Readiness
- ☒ Multiple Category Benefit and Bundling Opportunities

NEW OR EXISTING

- ☐ New Infrastructure or Facility
- ☒ Existing Infrastructure or Facility



PROJECT NUMBER 9216
PROJECT CATEGORY Transportation
PROJECT LOCATION Citywide
COUNCIL WARD All Wards

PROJECT DESCRIPTION
This is a recurring project of the Traffic Management Center (TMC) to upgrade or replace traffic signal communications equipment for communication with the City's signalized intersections. These intersections communicate with various types of devices that are electronic and have exposure to weather. They occasionally require replacement due to moisture, heat, or electrical damage. In addition, end of cycle life can cause failure or obsolescence.

PROJECT STATUS
This is an ongoing project used year-round to replace existing and install new communications devices between signals and the Traffic Management Center.

OPERATING BUDGET IMPACT
This is a rehabilitation of existing infrastructure and will not require additional operational or maintenance costs.

PROJECT FUNDING OVERVIEW

Total Project Cost	Prior Years Funding	Five-Year Plan	Remaining Needed
Ongoing	$ 40,000	$ 50,000	Ongoing

TWO-YEAR BUDGET AND FIVE-YEAR PLAN

Funding Source	FY 2026/27	FY 2027/28	FY 2028/29	FY 2029/30	FY 2030/31	Total
432 - Measure A	$ 10,000	$ 10,000	$ 10,000	$ 10,000	$ 10,000	$ 50,000
Total Funding	**$ 10,000**	**$ 10,000**	**$ 10,000**	**$ 10,000**	**$ 10,000**	**$ 50,000**

TRAFFIC SIGNAL POLE REPLACEMENT & RELOCATION

PRIORITIZATION CATEGORIES

- ☒ Risk to Health, Safety and Environment
- ☒ Regulatory or Mandated Requirements
- ☒ Asset Condition, Annual Recurring Costs, and Asset Longevity
- ☒ Community Investment and Economic Prosperity
- ☐ Level and Quality of Service
- ☒ Sustainability and Conservation
- ☐ Funding Availability
- ☐ Project Readiness
- ☒ Multiple Category Benefit and Bundling Opportunities

NEW OR EXISTING

- ☒ New Infrastructure or Facility
- ☐ Existing Infrastructure or Facility



PROJECT NUMBER 9145
PROJECT CATEGORY Transportation
PROJECT LOCATION Citywide
COUNCIL WARD All Wards

PROJECT DESCRIPTION
This project is for the replacement of aging traffic signal poles and foundations, and the relocation and replacement of several poles routinely damaged by large vehicles completing turns. Locations include but are not limited to: Magnolia/Van Buren-Southwest Corner; Harrison/Magnolia-Northeast Corner; Hole/Magnolia-Southwest Corner; Magnolia/Mall-Southwest Corner; Hole/Tyler-Northeast & Southwest Corner; Mall N./Tyler; Mall S./Tyler- Southeast Corner; Magnolia/Tyler-All 4 Corners; Alessandro/San Gorgonio-Northeast corner; Brockton & Ramona. Projects may include replacement of concrete curb ramps to ensure location meets ADA compliance.

PROJECT STATUS
The project is currently in the design phase. Following the completion of the design phase, the project will be sent out to bid to outside contractors. The estimated project completion date is Summer 2027.

OPERATING BUDGET IMPACT
There will be no significant operating impact. Maintenance and operations will be absorbed in the current Public Works maintenance budget.

PROJECT FUNDING OVERVIEW

Total Project Cost	Prior Years Funding	Five-Year Plan	Remaining Needed
$ 750,000	$ 456,000	$ -	$ 294,000

TWO-YEAR BUDGET AND FIVE-YEAR PLAN

Funding Source	FY 2026/27	FY 2027/28	FY 2028/29	FY 2029/30	FY 2030/31	Total
N/A	$ -	$ -	$ -	$ -	$ -	$ -
Total Funding	**$ -**	**$ -**	**$ -**	**$ -**	**$ -**	**$ -**

TRAFFIC SIGNAL PREEMPTION DEVICE REPLACEMENT

PRIORITIZATION CATEGORIES

- ☒ Risk to Health, Safety and Environment
- ☐ Regulatory or Mandated Requirements
- ☐ Asset Condition, Annual Recurring Costs, and Asset Longevity
- ☐ Community Investment and Economic Prosperity
- ☐ Level and Quality of Service
- ☐ Sustainability and Conservation
- ☐ Funding Availability
- ☐ Project Readiness
- ☐ Multiple Category Benefit and Bundling Opportunities

NEW OR EXISTING

- ☐ New Infrastructure or Facility
- ☒ Existing Infrastructure or Facility



PROJECT NUMBER 9146
PROJECT CATEGORY Transportation
PROJECT LOCATION Citywide
COUNCIL WARD All Wards

PROJECT DESCRIPTION
The City's Traffic Signal Maintenance Shop repairs and maintains 'Opticom' emergency vehicle preemption devices at traffic signals. These devices allow both Fire and Ambulance vehicles to receive a green light in their direction of travel. This project will create a budget for the replacement of such devices as they reach the end of their useful service life.

PROJECT STATUS
This is an ongoing maintenance project. The Traffic Signal staff replace failing emergency vehicle preemption devices as they reach the end of their service life. Replacements are prioritized by the length of time they were in service. Work is funded annually.

OPERATING BUDGET IMPACT
This is an ongoing item that will replace existing equipment and will have no impact on the operating budget.

PROJECT FUNDING OVERVIEW

Total Project Cost	Prior Years Funding	Five-Year Plan	Remaining Needed
Ongoing	$ 60,000	$ 50,000	Ongoing

TWO-YEAR BUDGET AND FIVE-YEAR PLAN

Funding Source	FY 2026/27	FY 2027/28	FY 2028/29	FY 2029/30	FY 2030/31	Total
432 - Measure A	$ 10,000	$ 10,000	$ 10,000	$ 10,000	$ 10,000	$ 50,000
Total Funding	**$ 10,000**	**$ 10,000**	**$ 10,000**	**$ 10,000**	**$ 10,000**	**$ 50,000**

VAN BUREN – JURUPA TO SANTA ANA RIVER BRIDGE

PRIORITIZATION CATEGORIES

- ☒ Risk to Health, Safety and Environment
- ☐ Regulatory or Mandated Requirements
- ☒ Asset Condition, Annual Recurring Costs, and Asset Longevity
- ☒ Community Investment and Economic Prosperity
- ☒ Level and Quality of Service
- ☒ Sustainability and Conservation
- ☐ Funding Availability
- ☒ Project Readiness
- ☒ Multiple Category Benefit and Bundling Opportunities

NEW OR EXISTING

- ☐ New Infrastructure or Facility
- ☒ Existing Infrastructure or Facility



PROJECT NUMBER 8409 **COUNCIL WARD** 3,7
PROJECT CATEGORY Transportation
PROJECT LOCATION Van Buren Boulevard and Jurupa Avenue

PROJECT DESCRIPTION
This project will widen the east side of Van Buren Boulevard approximately 300 feet north of Jurupa Avenue to the Santa Ana River Bridge. Work includes the construction of concrete curb, gutter, sidewalk, asphalt pavement, provision of bike lanes, and the installation of streetlights. The Project will also restripe northbound Van Buren Boulevard from south of Jurupa Avenue to the Santa Ana River Bridge.

PROJECT STATUS
The project has been reopened with an estimated completion date of June 2027.

OPERATING BUDGET IMPACT
This is a rehabilitation of existing infrastructure and will not require additional operational or maintenance costs.

PROJECT FUNDING OVERVIEW

Total Project Cost	Prior Years Funding	Five-Year Plan	Remaining Needed
$ 5,224,261	$ 5,224,261	$ -	$ -

TWO-YEAR BUDGET AND FIVE-YEAR PLAN

Funding Source	FY 2026/27	FY 2027/28	FY 2028/29	FY 2029/30	FY 2030/31	Total
N/A	$ -	$ -	$ -	$ -	$ -	$ -
Total Funding	**$ -**	**$ -**	**$ -**	**$ -**	**$ -**	**$ -**

VAN BUREN CLASS II BIKE LANES

PRIORITIZATION CATEGORIES

- ☒ Risk to Health, Safety and Environment
- ☐ Regulatory or Mandated Requirements
- ☐ Asset Condition, Annual Recurring Costs, and Asset Longevity
- ☒ Community Investment and Economic Prosperity
- ☒ Level and Quality of Service
- ☒ Sustainability and Conservation
- ☒ Funding Availability
- ☒ Project Readiness
- ☒ Multiple Category Benefit and Bundling Opportunities

NEW OR EXISTING

- ☐ New Infrastructure or Facility
- ☒ Existing Infrastructure or Facility



PROJECT NUMBER 9308 **COUNCIL WARD** 4
PROJECT CATEGORY Transportation
PROJECT LOCATION Van Buren Boulevard from Wood Road to Orange Terrace Parkway

PROJECT DESCRIPTION
This project will construct Class II buffered bicycle lanes in both directions along Van Buren Boulevard between Wood Road and Orange Terrace Parkway. The buffered lanes will provide a dedicated, separated space for cyclists, enhancing safety by creating more distance from vehicle traffic. This project implements the City's "Complete Streets" approach and directly responds to community requests for safer active transportation options. These improvements will enhance connectivity to nearby schools, parks, and commercial areas, improve public health by encouraging cycling, and reduce greenhouse gas emissions.

PROJECT STATUS
The project is in the planning and design phase following the City Council's acceptance of the TDA Article 3/SB 821 grant on July 1, 2025. The construction is anticipated to begin in 2027 and estimated project completion is Summer 2028.

OPERATING BUDGET IMPACT
This project is not anticipated to have a significant operating budget impact. Future routine maintenance, including sweeping and the eventual re-stripping of the buffered lanes, will be absorbed by the existing Public Works Department operating budget.

PROJECT FUNDING OVERVIEW

Total Project Cost	Prior Years Funding	Five-Year Plan	Remaining Needed
$ 1,470,325	$ 1,470,325	$ -	$ -

TWO-YEAR BUDGET AND FIVE-YEAR PLAN

Funding Source	FY 2026/27	FY 2027/28	FY 2028/29	FY 2029/30	FY 2030/31	Total
N/A	$ -	$ -	$ -	$ -	$ -	$ -
Total Funding	**$ -**	**$ -**	**$ -**	**$ -**	**$ -**	**$ -**

VEHICLE MILES TRAVELED MITIGATION STUDY

PRIORITIZATION CATEGORIES

- ☒ Risk to Health, Safety and Environment
- ☐ Regulatory or Mandated Requirements
- ☐ Asset Condition, Annual Recurring Costs, and Asset Longevity
- ☐ Community Investment and Economic Prosperity
- ☐ Level and Quality of Service
- ☐ Sustainability and Conservation
- ☐ Funding Availability
- ☐ Project Readiness
- ☐ Multiple Category Benefit and Bundling Opportunities

NEW OR EXISTING

- ☒ New Infrastructure or Facility
- ☐ Existing Infrastructure or Facility



PROJECT NUMBER 9206
PROJECT CATEGORY Transportation
PROJECT LOCATION Citywide
COUNCIL WARD All Wards

PROJECT DESCRIPTION

The City of Riverside does not have a mitigation program for projects to participate and contribute their fair share to reducing the project's Vehicle Miles Traveled (VMT) impacts. The City of Riverside seeks to create a VMT fees, bank & mitigation program to help streamline the development process and facilitate project mitigation in City of Riverside. The VMT Mitigation Program will assess and pilot a possible VMT "banking", "fee", or "exchange" framework that would allow developers and institutions whose projects would lead to VMT increases to offset such increase through payment of fees toward, or direct implementation of, projects that will lessen VMT. The development of the VMT Mitigation Program will include public input from local stakeholders and community outreach to gain more insight on the challenges and opportunities associated with the program.

PROJECT STATUS

The consultant was selected on February 8, 2023, and work has started. An Environmental Impact Report may be required for future work so the program is expected to be completed by Summer 2027.

OPERATING BUDGET IMPACT

The project or the account will collect a fair share of funds through the mitigation bank program. There will be no future operating impacts.

PROJECT FUNDING OVERVIEW

Total Project Cost	Prior Years Funding	Five-Year Plan	Remaining Needed
$ 334,550	$ 334,550	$ -	$ -

TWO-YEAR BUDGET AND FIVE-YEAR PLAN

Funding Source	FY 2026/27	FY 2027/28	FY 2028/29	FY 2029/30	FY 2030/31	Total
N/A	$ -	$ -	$ -	$ -	$ -	$ -
Total Funding	**$ -**	**$ -**	**$ -**	**$ -**	**$ -**	**$ -**

VICTORIA AVENUE BEAUTIFICATION

PRIORITIZATION CATEGORIES

- ☐ Risk to Health, Safety and Environment
- ☐ Regulatory or Mandated Requirements
- ☐ Asset Condition, Annual Recurring Costs, and Asset Longevity
- ☒ Community Investment and Economic Prosperity
- ☐ Level and Quality of Service
- ☒ Sustainability and Conservation
- ☐ Funding Availability
- ☐ Project Readiness
- ☐ Multiple Category Benefit and Bundling Opportunities

NEW OR EXISTING

- ☒ New Infrastructure or Facility
- ☐ Existing Infrastructure or Facility



PROJECT NUMBER 9280 **COUNCIL WARD** 3,4,5
PROJECT CATEGORY Transportation
PROJECT LOCATION Along Victoria Ave in Wards 3,4, and 5

PROJECT DESCRIPTION
This project will restore and enhance Victoria Avenue, a historic landmark and popular recreational corridor, through phased improvements over five years. Major upgrades include repairing and upgrading the irrigation system, applying mulch in medians to retain moisture and reduce weeds, increasing the propagation of Ragged Robin roses, and renovating the walking trail. These enhancements will preserve Victoria Avenue's historic character while improving sustainability, accessibility, and overall public enjoyment.

PROJECT STATUS
The project was awarded in June 2024. The project will happen in phases with phase one estimated to start January 2027 and with an estimated completion date of Summer 2027.

OPERATING BUDGET IMPACT
There will be no significant operating impact. Maintenance and operations will be absorbed in the current Public Works maintenance budget.

PROJECT FUNDING OVERVIEW

Total Project Cost	Prior Years Funding	Five-Year Plan	Remaining Needed
$ 2,783,000	$ 775,000	$ -	$ 2,008,000

TWO-YEAR BUDGET AND FIVE-YEAR PLAN

Funding Source	FY 2026/27	FY 2027/28	FY 2028/29	FY 2029/30	FY 2030/31	Total
N/A	$ -	$ -	$ -	$ -	$ -	$ -
Total Funding	**$ -**	**$ -**	**$ -**	**$ -**	**$ -**	**$ -**

WHITTIER PLACE ALLEY FENCING

PRIORITIZATION CATEGORIES

- ☒ Risk to Health, Safety and Environment
- ☐ Regulatory or Mandated Requirements
- ☐ Asset Condition, Annual Recurring Costs, and Asset Longevity
- ☒ Community Investment and Economic Prosperity
- ☒ Level and Quality of Service
- ☒ Sustainability and Conservation
- ☒ Funding Availability
- ☒ Project Readiness
- ☒ Multiple Category Benefit and Bundling Opportunities

NEW OR EXISTING

- ☐ New Infrastructure or Facility
- ☒ Existing Infrastructure or Facility



PROJECT NUMBER 9304 **COUNCIL WARD** 1
PROJECT CATEGORY Transportation
PROJECT LOCATION Whittier Place from Chestnut St to Market St

PROJECT DESCRIPTION
This project enhances public safety and community well-being by restricting unauthorized access to the Whittier Place alley between Chestnut Street and Market Street. The scope includes installing new security fencing and automated gates, supported by a new underground electrical service. To improve pedestrian safety and accessibility, the project will also reconstruct adjacent concrete curbs, sidewalks, pedestrian ramps, and driveways. These improvements are designed to deter crime and prevent illegal dumping in the area, providing a 10 - 15 years service life. The cost of construction will be reimbursed by Riverside Community College District.

PROJECT STATUS
This project is in the Design phase. Staff is finalizing BID 8218 for construction solicitation which will then move forward to City Council review and approval. Construction is anticipated to be completed by Fall 2026.

OPERATING BUDGET IMPACT
Maintenance costs will be shared between the City of Riverside and Riverside Community College District but will not exceed $5,000 per year for the City of Riverside.

PROJECT FUNDING OVERVIEW			
Total Project Cost	Prior Years Funding	Five-Year Plan	Remaining Needed
$300,000	$ 105,000	$ -	$ 195,000

TWO-YEAR BUDGET AND FIVE-YEAR PLAN						
Funding Source	FY 2026/27	FY 2027/28	FY 2028/29	FY 2029/30	FY 2030/31	Total
N/A	$ -	$ -	$ -	$ -	$ -	$ -
Total Funding	**$ -**	**$ -**	**$ -**	**$ -**	**$ -**	**$ -**

This Page Intentionally Left Blank

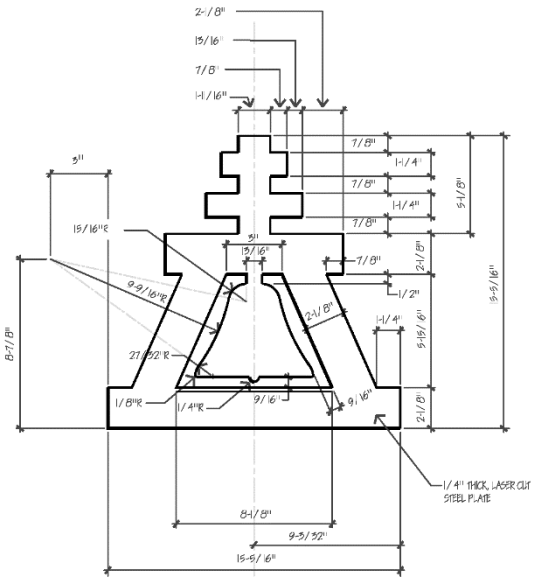



WATER

CITY OF RIVERSIDE

PROJECT LOCATION MAP

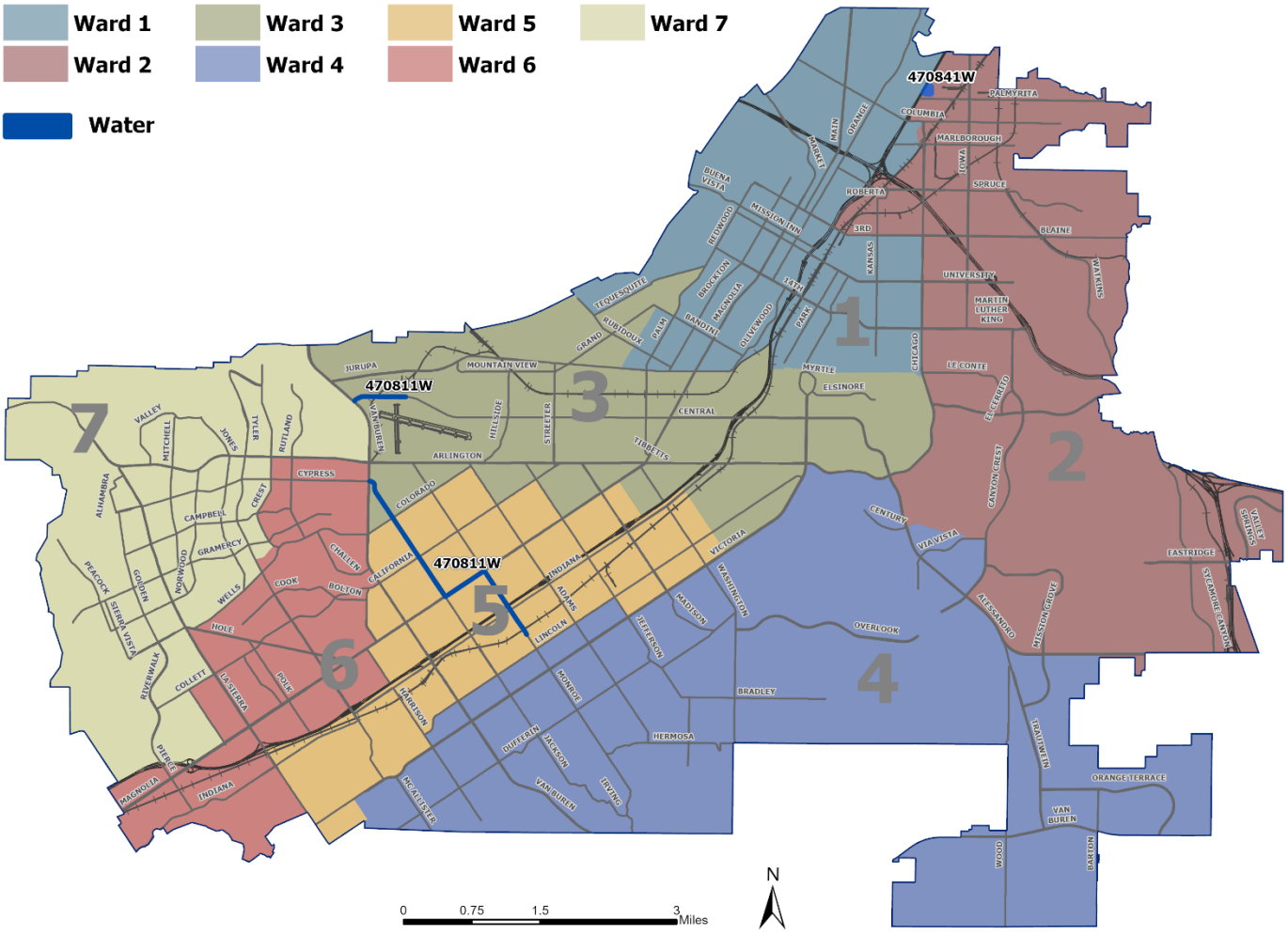

Note: This map includes all active and new capital projects. Ongoing and citywide projects are not included on the map. To view additional information and detailed maps, please visit the City's Budget Transparency Portal at https://Riverside.OpenBook.Questica.com.



This Page Intentionally Left Blank

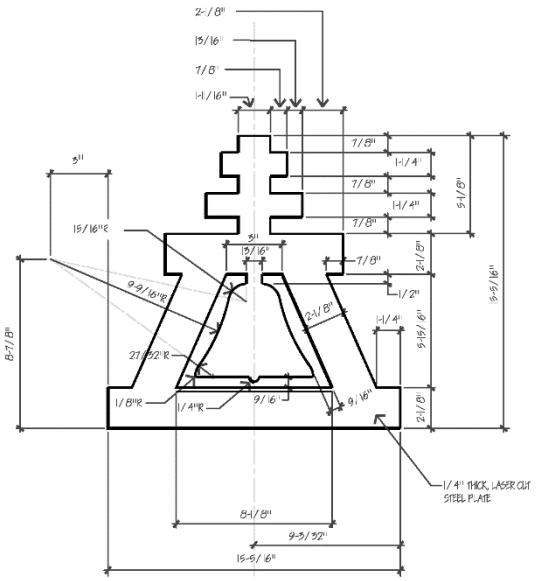

ADVANCED METERING INFRASTRUCTURE

PRIORITIZATION CATEGORIES

- ☐ Risk to Health, Safety and Environment
- ☐ Regulatory or Mandated Requirements
- ☐ Asset Condition, Annual Recurring Costs, and Asset Longevity
- ☒ Community Investment and Economic Prosperity
- ☒ Level and Quality of Service
- ☒ Sustainability and Conservation
- ☐ Funding Availability
- ☐ Project Readiness
- ☒ Multiple Category Benefit and Bundling Opportunities

NEW OR EXISTING

- ☒ New Infrastructure or Facility
- ☒ Existing Infrastructure or Facility



PROJECT NUMBER 470823W
PROJECT CATEGORY Water
PROJECT LOCATION Citywide
COUNCIL WARD All Wards

PROJECT DESCRIPTION
This system automation project for the Advanced Metering Infrastructure (AMI) and Meter Data Management System will integrate AMI data and support customer-facing applications and web integration of the Customer Integration System. The AMI delivers automated meter reading resulting in more efficient consumption management and enhanced customer service.

PROJECT STATUS
This project is on hold pending completion and early implementation of RPU-Electric's AMI project.

OPERATING BUDGET IMPACT
Operating budget impacts will be evaluated closer to project completion.

PROJECT FUNDING OVERVIEW

Total Project Cost	Prior Years Funding	Five-Year Plan	Remaining Needed
$ 7,696,837	$ 7,696,837	$ -	$ -

TWO-YEAR BUDGET AND FIVE-YEAR PLAN

Funding Source	FY 2026/27	FY 2027/28	FY 2028/29	FY 2029/30	FY 2030/31	Total
N/A	$ -	$ -	$ -	$ -	$ -	$ -
Total Funding	**$ -**	**$ -**	**$ -**	**$ -**	**$ -**	**$ -**

DIGITAL MODERNIZATION UPGRADE

PRIORITIZATION CATEGORIES

- ☐ Risk to Health, Safety and Environment
- ☐ Regulatory or Mandated Requirements
- ☐ Asset Condition, Annual Recurring Costs, and Asset Longevity
- ☒ Community Investment and Economic Prosperity
- ☒ Level and Quality of Service
- ☐ Sustainability and Conservation
- ☒ Funding Availability
- ☒ Project Readiness
- ☒ Multiple Category Benefit and Bundling Opportunities

NEW OR EXISTING

- ☒ New Infrastructure or Facility
- ☐ Existing Infrastructure or Facility



PROJECT NUMBER 470825W
PROJECT CATEGORY Water
PROJECT LOCATION Citywide
COUNCIL WARD All Wards

PROJECT DESCRIPTION
The Work, Asset, and Inventory Management System (WIS) is important not only for controlling and minimizing stock materials on hand, but it is important for its hand-off of materials through the work management system and assigning the cost of materials to assets in the asset management system. The WIS is an integral part of the workflows and information needed by the Work Management System and Asset Management System. The system supports management of the Utility's field infrastructure assets (e.g., pipes, pumps, valves, connections, etc.) and includes fieldwork orders, asset costs and utilization.

PROJECT STATUS
The project scope has been defined. An RFP is anticipated to be released next fiscal year.

OPERATING BUDGET IMPACT
Not currently identified; this will be determined once the project starts.

PROJECT FUNDING OVERVIEW

Total Project Cost	Prior Years Funding	Five-Year Plan	Remaining Needed
$ 3,313,970	$ 2,492,797	$ 821,173	$ -

TWO-YEAR BUDGET AND FIVE-YEAR PLAN

Funding Source	FY 2026/27	FY 2027/28	FY 2028/29	FY 2029/30	FY 2030/31	Total
520 - Water Fund	$ 821,173	$ -	$ -	$ -	$ -	$ 821,173
Total Funding	**$ 821,173**	**$ -**	**$ -**	**$ -**	**$ -**	**$ 821,173**

DISTRIBUTION AUTOMATION/RELIABILITY

PRIORITIZATION CATEGORIES

- ☒ Risk to Health, Safety and Environment
- ☐ Regulatory or Mandated Requirements
- ☒ Asset Condition, Annual Recurring Costs, and Asset Longevity
- ☒ Community Investment and Economic Prosperity
- ☒ Level and Quality of Service
- ☐ Sustainability and Conservation
- ☒ Funding Availability
- ☒ Project Readiness
- ☒ Multiple Category Benefit and Bundling Opportunities

NEW OR EXISTING

- ☒ New Infrastructure or Facility
- ☐ Existing Infrastructure or Facility



PROJECT NUMBER 470655W
PROJECT CATEGORY Water
PROJECT LOCATION Citywide
COUNCIL WARD All Wards

PROJECT DESCRIPTION
This program is for the ongoing design and installation of remote sensing devices and remotely controlled equipment on the RPU's water system. This new technology equipment remotely monitors the water system and reports information immediately to the water control center. Remotely-controlled equipment reduces personnel costs and improves response times to system disturbances.

PROJECT STATUS
This program includes ongoing purchase and installation of equipment for remote monitoring of the water production and distribution system.

OPERATING BUDGET IMPACT
This is an ongoing program and will not require additional operating and maintenance costs.

PROJECT FUNDING OVERVIEW

Total Project Cost	Prior Years Funding	Five-Year Plan	Remaining Needed
Ongoing	$ 18,231	$ 662,236	Ongoing

TWO-YEAR BUDGET AND FIVE-YEAR PLAN

Funding Source	FY 2026/27	FY 2027/28	FY 2028/29	FY 2029/30	FY 2030/31	Total
520 – Water Fund	$ 662,236	$ -	$ -	$ -	$ -	$ 662,236
Total Funding	**$ 662,236**	**$ -**	**$ -**	**$ -**	**$ -**	**$ 662,236**

DISTRIBUTION SYSTEM FACILITIES REPLACEMENTS

PRIORITIZATION CATEGORIES

- ☐ Risk to Health, Safety and Environment
- ☐ Regulatory or Mandated Requirements
- ☒ Asset Condition, Annual Recurring Costs, and Asset Longevity
- ☒ Community Investment and Economic Prosperity
- ☒ Level and Quality of Service
- ☐ Sustainability and Conservation
- ☒ Funding Availability
- ☒ Project Readiness
- ☒ Multiple Category Benefit and Bundling Opportunities

NEW OR EXISTING

- ☐ New Infrastructure or Facility
- ☒ Existing Infrastructure or Facility



PROJECT NUMBER 470706W
PROJECT CATEGORY Water
PROJECT LOCATION Citywide
COUNCIL WARD All Wards

PROJECT DESCRIPTION
This ongoing program replaces old and inoperable water appurtenances including customer water services, fire hydrants, valves, air valves, and other unserviceable or damaged appurtenances.

PROJECT STATUS
This program is an ongoing replacement of water appurtenances which supports the Department's Asset Management program.

OPERATING BUDGET IMPACT
This is an ongoing program which replaces existing appurtenances to the water system and will not require additional operating and maintenance costs.

PROJECT FUNDING OVERVIEW

Total Project Cost	Prior Years Funding	Five-Year Plan	Remaining Needed
Ongoing	$ 43,246,558	$ 16,100,253	Ongoing

TWO-YEAR BUDGET AND FIVE-YEAR PLAN

Funding Source	FY 2026/27	FY 2027/28	FY 2028/29	FY 2029/30	FY 2030/31	Total
520 - Water Fund	$ 3,038,000	$ 2,838,000	$ 2,872,242	$ 3,334,668	$ 4,017,343	$ 16,100,253
Total Funding	**$ 3,038,000**	**$ 2,838,000**	**$ 2,872,242**	**$ 3,334,668**	**$ 4,017,343**	**$ 16,100,253**

ENTERPRISE OPERATION DATA MANAGEMENT SYSTEM

PRIORITIZATION CATEGORIES

- ☐ Risk to Health, Safety and Environment
- ☐ Regulatory or Mandated Requirements
- ☐ Asset Condition, Annual Recurring Costs, and Asset Longevity
- ☒ Community Investment and Economic Prosperity
- ☒ Level and Quality of Service
- ☐ Sustainability and Conservation
- ☒ Funding Availability
- ☒ Project Readiness
- ☒ Multiple Category Benefit and Bundling Opportunities

NEW OR EXISTING

- ☒ New Infrastructure or Facility
- ☐ Existing Infrastructure or Facility

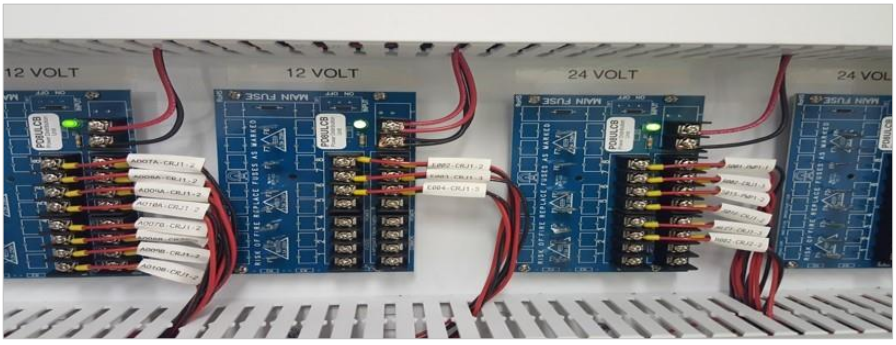

PROJECT NUMBER 470822W
PROJECT CATEGORY Water
PROJECT LOCATION Citywide
COUNCIL WARD All Wards

PROJECT DESCRIPTION
The Operational Data Management System (ODMS) receives data from water delivery and operation systems and data communication, storage, and analysis systems. The data will support advanced monitoring and control systems to improve the operational efficiency and capability of the water delivery system.

PROJECT STATUS
This program is ongoing to provide the most advanced monitoring and control systems aimed at improving the operation efficiency and capacity of the water delivery system.

OPERATING BUDGET IMPACT
The operating budget and five-year plan include ongoing annual software license and maintenance costs of approximately $126,000/year.

PROJECT FUNDING OVERVIEW

Total Project Cost	Prior Years Funding	Five-Year Plan	Remaining Needed
Ongoing	$ 1,351,565	$ -	$ Ongoing

TWO-YEAR BUDGET AND FIVE-YEAR PLAN

Funding Source	FY 2026/27	FY 2027/28	FY 2028/29	FY 2029/30	FY 2030/31	Total
N/A	$ -	$ -	$ -	$ -	$ -	$ -
Total Funding	**$ -**	**$ -**	**$ -**	**$ -**	**$ -**	**$ -**

FACILITY REHABILITATION PROGRAM

PRIORITIZATION CATEGORIES

- ☒ Risk to Health, Safety and Environment
- ☐ Regulatory or Mandated Requirements
- ☒ Asset Condition, Annual Recurring Costs, and Asset Longevity
- ☒ Community Investment and Economic Prosperity
- ☒ Level and Quality of Service
- ☐ Sustainability and Conservation
- ☒ Funding Availability
- ☒ Project Readiness
- ☒ Multiple Category Benefit and Bundling Opportunities

NEW OR EXISTING

- ☐ New Infrastructure or Facility
- ☒ Existing Infrastructure or Facility



PROJECT NUMBER 470803W
PROJECT CATEGORY Water
PROJECT LOCATION Citywide
COUNCIL WARD All Wards

PROJECT DESCRIPTION
This is an ongoing program that involves the rehabilitation of existing water facilities, including pumps, motors, wells, reservoirs, canals, facility automation, site security, and site landscaping. The useful life of pumps and motors can range between 7 to 15 years; wells can be rehabilitated every 7 to 10 years; and reservoirs and canals can last about 50 to 60 years.

PROJECT STATUS
This ongoing rehabilitation/replacement program for existing water facilities is prioritized based on facility condition and supports the Department's Asset Management program.

OPERATING BUDGET IMPACT
This is an ongoing program which rehabilitates and/or replaces existing infrastructure to the water system and will not require additional operating and maintenance costs.

PROJECT FUNDING OVERVIEW

Total Project Cost	Prior Years Funding	Five-Year Plan	Remaining Needed
Ongoing	$ 58,282,102	$ 20,302,760	Ongoing

TWO-YEAR BUDGET AND FIVE-YEAR PLAN

Funding Source	FY 2026/27	FY 2027/28	FY 2028/29	FY 2029/30	FY 2030/31	Total
520 - Water Fund	$ 4,062,236	$ 6,325,164	$ 2,739,446	$ 2,861,330	$ 4,314,584	$ 20,302,760
Total Funding	**$ 4,062,236**	**$ 6,325,164**	**$ 2,739,446**	**$ 2,861,330**	**$ 4,314,584**	**$ 20,302,760**

LAND MOBILE RADIO

PRIORITIZATION CATEGORIES

- ☒ Risk to Health, Safety and Environment
- ☐ Regulatory or Mandated Requirements
- ☐ Asset Condition, Annual Recurring Costs, and Asset Longevity
- ☒ Community Investment and Economic Prosperity
- ☒ Level and Quality of Service
- ☐ Sustainability and Conservation
- ☒ Funding Availability
- ☒ Project Readiness
- ☒ Multiple Category Benefit and Bundling Opportunities

NEW OR EXISTING

- ☒ New Infrastructure or Facility
- ☐ Existing Infrastructure or Facility



PROJECT NUMBER 470827W
PROJECT CATEGORY Water
PROJECT LOCATION Citywide
COUNCIL WARD All Wards

PROJECT DESCRIPTION
The installation and implementation of the Land Mobile Radio (LMR) system will provide a wireless communications system intended for use by terrestrial users in vehicles (mobiles) or on foot (portables). The new system will capitalize on digital technology known as frequency division multiple access (FDMA). The new LMR system will supply new antennas to provide citywide coverage, include a new dispatcher console; coexist with the current analog LMR system; be based on frequency division multiple access technology; support narrow channels; enable trunked modes of operation for both analog and digital modulations; have multiple talk groups; and support private calling for increased safety in the field.

PROJECT STATUS
Phase I of the installation and integration of the new system is complete. The project will shift into the second phase to sustain the land-mobile radio system citywide and is due to be completed in Winter of 2025. This project is being done in conjunction with RPU-Electric for a better coordinated and more efficient implementation process.

OPERATING BUDGET IMPACT
Following the completion of the second phase, there will be no significant fiscal impact outside of the annual software license and maintenance costs which will be included in Water's operating budgets. Estimated amount of operating budget impacts will be evaluated closer to project completion.

PROJECT FUNDING OVERVIEW

Total Project Cost	Prior Years Funding	Five-Year Plan	Remaining Needed
$ 322,240	$ 322,240	$ -	$ -

TWO-YEAR BUDGET AND FIVE-YEAR PLAN

Funding Source	FY 2026/27	FY 2027/28	FY 2028/29	FY 2029/30	FY 2030/31	Total
N/A	$ -	$ -	$ -	$ -	$ -	$ -
Total Funding	**$ -**	**$ -**	**$ -**	**$ -**	**$ -**	**$ -**

MAIN REPLACEMENTS PROGRAM

PRIORITIZATION CATEGORIES

- ☒ Risk to Health, Safety and Environment
- ☐ Regulatory or Mandated Requirements
- ☐ Asset Condition, Annual Recurring Costs, and Asset Longevity
- ☒ Community Investment and Economic Prosperity
- ☒ Level and Quality of Service
- ☐ Sustainability and Conservation
- ☒ Funding Availability
- ☒ Project Readiness
- ☒ Multiple Category Benefit and Bundling Opportunities

NEW OR EXISTING

- ☐ New Infrastructure or Facility
- ☒ Existing Infrastructure or Facility



PROJECT NUMBER 470707W
PROJECT CATEGORY Water
PROJECT LOCATION Citywide
COUNCIL WARD All Wards

PROJECT DESCRIPTION
This is an ongoing program that involves the design and construction of various water distribution mains to replace high-priority leaking and undersized water mains to improve system reliability. The lengths and material of the pipe can vary from steel, ductile iron to high-strength plastic. Although the City has some pipelines that are close to 90 years old, pipelines typically can last about 70 years.

PROJECT STATUS
This program is an ongoing program to replace aged and leaking mains. Construction occurs throughout the year. Prioritization of water main replacements is based on those which have a high probability and consequence of failure.

OPERATING BUDGET IMPACT
This is an ongoing program which replaces existing infrastructure to the water system and will not require additional operating and maintenance costs.

PROJECT FUNDING OVERVIEW

Total Project Cost	Prior Years Funding	Five-Year Plan	Remaining Needed
Ongoing	$ 156,558,631	$ 69,477,507	Ongoing

TWO-YEAR BUDGET AND FIVE-YEAR PLAN

Funding Source	FY 2026/27	FY 2027/28	FY 2028/29	FY 2029/30	FY 2030/31	Total
520 - Water Fund	$ 11,986,054	$ 11,941,980	$ 16,276,830	$ 14,343,845	$ 14,928,798	$ 69,477,507
Total Funding	**$ 11,986,054**	**$ 11,941,980**	**$ 16,276,830**	**$ 14,343,845**	**$ 14,928,798**	**$ 69,477,507**

METERS

PRIORITIZATION CATEGORIES

- ☐ Risk to Health, Safety and Environment
- ☐ Regulatory or Mandated Requirements
- ☒ Asset Condition, Annual Recurring Costs, and Asset Longevity
- ☒ Community Investment and Economic Prosperity
- ☒ Level and Quality of Service
- ☐ Sustainability and Conservation
- ☒ Funding Availability
- ☒ Project Readiness
- ☒ Multiple Category Benefit and Bundling Opportunities

NEW OR EXISTING

- ☐ New Infrastructure or Facility
- ☒ Existing Infrastructure or Facility



PROJECT NUMBER 470702W
PROJECT CATEGORY Water
PROJECT LOCATION Citywide
COUNCIL WARD All Wards

PROJECT DESCRIPTION
This is an ongoing program involving the replacement of approximately 4,000 small meters and the replacement or refurbishment of over 80 large meters per year. New meters are more reliable and have more accurate readings. Meters typically can last about 15-20 years.

PROJECT STATUS
This program is ongoing and prioritizes replacement/refurbishment of older meters.

OPERATING BUDGET IMPACT
This is an ongoing program which replaces existing appurtenances to the water system and will not require additional operating and maintenance costs.

PROJECT FUNDING OVERVIEW

Total Project Cost	Prior Years Funding	Five-Year Plan	Remaining Needed
Ongoing	$ 14,633,915	$ 7,705,048	Ongoing

TWO-YEAR BUDGET AND FIVE-YEAR PLAN

Funding Source	FY 2026/27	FY 2027/28	FY 2028/29	FY 2029/30	FY 2030/31	Total
520 - Water Fund	$ 1,378,612	$ 1,326,436	$ 1,500,000	$ 2,000,000	$ 1,500,000	$ 7,705,048
Total Funding	**$ 1,378,612**	**$ 1,326,436**	**$ 1,500,000**	**$ 2,000,000**	**$ 1,500,000**	**$ 7,705,048**

MOBILE APPLICATIONS

PRIORITIZATION CATEGORIES

- ☒ Risk to Health, Safety and Environment
- ☐ Regulatory or Mandated Requirements
- ☐ Asset Condition, Annual Recurring Costs, and Asset Longevity
- ☒ Community Investment and Economic Prosperity
- ☒ Level and Quality of Service
- ☐ Sustainability and Conservation
- ☒ Funding Availability
- ☒ Project Readiness
- ☒ Multiple Category Benefit and Bundling Opportunities

NEW OR EXISTING

- ☒ New Infrastructure or Facility
- ☐ Existing Infrastructure or Facility



PROJECT NUMBER 470831W
PROJECT CATEGORY Water
PROJECT LOCATION Citywide
COUNCIL WARD All Wards

PROJECT DESCRIPTION
The mobile applications program will increase operational efficiency and safety by providing real-time information to field personnel when and where they need it. It will ensure system configuration and status is always known by the personnel operating the system; reduce the need for paper-based maps, plans, and work orders; reduce the as-built record-keeping effort; and enable field operation personnel to share real-time information with system operators and engineers.

PROJECT STATUS
Implementation of the mobile applications program is currently on hold. This project is being done in conjunction with RPU-Electric for a better coordinated and more efficient implementation process.

OPERATING BUDGET IMPACT
Following the completion of the project, there will be no significant fiscal impact outside of the annual software license and maintenance costs which will be included in Water's operating budgets. Estimated amount of operating budget impacts will be evaluated closer to project completion.

PROJECT FUNDING OVERVIEW

Total Project Cost	Prior Years Funding	Five-Year Plan	Remaining Needed
$ 503,054	$ 503,054	$ -	$ -

TWO-YEAR BUDGET AND FIVE-YEAR PLAN

Funding Source	FY 2026/27	FY 2027/28	FY 2028/29	FY 2029/30	FY 2030/31	Total
N/A	$ -	$ -	$ -	$ -	$ -	$ -
Total Funding	**$ -**	**$ -**	**$ -**	**$ -**	**$ -**	**$ -**

NETWORK COMMUNICATION SYSTEM

PRIORITIZATION CATEGORIES

- ☐ Risk to Health, Safety and Environment
- ☐ Regulatory or Mandated Requirements
- ☐ Asset Condition, Annual Recurring Costs, and Asset Longevity
- ☒ Community Investment and Economic Prosperity
- ☒ Level and Quality of Service
- ☐ Sustainability and Conservation
- ☒ Funding Availability
- ☒ Project Readiness
- ☒ Multiple Category Benefit and Bundling Opportunities

NEW OR EXISTING

- ☒ New Infrastructure or Facility
- ☐ Existing Infrastructure or Facility



PROJECT NUMBER 470826W
COUNCIL WARD All Wards
PROJECT CATEGORY Water
PROJECT LOCATION Citywide

PROJECT DESCRIPTION
The Network Communications Systems Project will upgrade and create redundancies in the communication network to improve the communication backbone and improve system functionality, efficiency, reliability, and cybersecurity. The expected life cycle for these upgrades is about 15 to 20 years.

PROJECT STATUS
The project is completed with post implementation system updates and staff training planned for FY 2026/27.

OPERATING BUDGET IMPACT
The one-year operating budget and five-year plan include ongoing annual software license and maintenance costs.

PROJECT FUNDING OVERVIEW

Total Project Cost	Prior Years Funding	Five-Year Plan	Remaining Needed
$ 2,880,776	$ 2,880,776	$ -	$ -

TWO-YEAR BUDGET AND FIVE-YEAR PLAN

Funding Source	FY 2026/27	FY 2027/28	FY 2028/29	FY 2029/30	FY 2030/31	Total
N/A	$ -	$ -	$ -	$ -	$ -	$ -
Total Funding	**$ -**	**$ -**	**$ -**	**$ -**	**$ -**	**$ -**

OPERATIONAL TECHNOLOGY GOVERNANCE

PRIORITIZATION CATEGORIES

- ☐ Risk to Health, Safety and Environment
- ☐ Regulatory or Mandated Requirements
- ☐ Asset Condition, Annual Recurring Costs, and Asset Longevity
- ☒ Community Investment and Economic Prosperity
- ☒ Level and Quality of Service
- ☐ Sustainability and Conservation
- ☒ Funding Availability
- ☒ Project Readiness
- ☒ Multiple Category Benefit and Bundling Opportunities

NEW OR EXISTING

- ☐ New Infrastructure or Facility
- ☒ Existing Infrastructure or Facility



PROJECT NUMBER 470824W
PROJECT CATEGORY Water
PROJECT LOCATION Citywide
COUNCIL WARD All Wards

PROJECT DESCRIPTION
The Operational Technology Governance project includes planning, management, internal controls, and cyber and physical security improvements, as well as planning and implementation of a Security Risk Management Program. The Security Risk Management Program includes policies; tools required to monitor irregular activities on the network; and endpoint devices to facilitate proactive response to malicious activities or security-related performance issues.

PROJECT STATUS
Equipment and software solutions for cyber and physical security issues are identified and prioritized through new biannual assessments. This project is being done in conjunction with RPU-Electric for a better coordinated and more efficient implementation process.

OPERATING BUDGET IMPACT
This is an ongoing program and will not require additional operating and maintenance costs.

PROJECT FUNDING OVERVIEW

Total Project Cost	Prior Years Funding	Five-Year Plan	Remaining Needed
Ongoing	$ 1,383,971	$ 1,250,000	Ongoing

TWO-YEAR BUDGET AND FIVE-YEAR PLAN

Funding Source	FY 2026/27	FY 2027/28	FY 2028/29	FY 2029/30	FY 2030/31	Total
520 - Water Fund	$ 250,000	$ 250,000	$ 250,000	$ 250,000	$ 250,000	$ 1,250,000
Total Funding	**$ 250,000**	**$ 250,000**	**$ 250,000**	**$ 250,000**	**$ 250,000**	**$ 1,250,000**

POLYFLUOROALKYL SUBSTANCES (PFAS) PALMYRITA TREATMENT PLANT

PRIORITIZATION CATEGORIES

- ☐ Risk to Health, Safety and Environment
- ☒ Regulatory or Mandated Requirements
- ☐ Asset Condition, Annual Recurring Costs, and Asset Longevity
- ☐ Community Investment and Economic Prosperity
- ☐ Level and Quality of Service
- ☐ Sustainability and Conservation
- ☐ Funding Availability
- ☐ Project Readiness
- ☐ Multiple Category Benefit and Bundling Opportunities

NEW OR EXISTING

- ☒ New Infrastructure or Facility
- ☐ Existing Infrastructure or Facility



PROJECT NUMBER 470841W **COUNCIL WARD** 2
PROJECT CATEGORY Water
PROJECT LOCATION 860 East La Cadena

PROJECT DESCRIPTION
The new PFAS Water Treatment Plant will consist of site modifications at RPU's existing Palmyrita Water Treatment Plant to include 22 Ion Exchange vessels, pre-filters, booster pumps, yard piping, electrical equipment, a new 30-inch diameter supply pipeline, and other ancillary components. The work will be mostly confined within the perimeter of the existing treatment plant site located at 860 East La Cadena Drive. However, the 30-inch diameter supply pipeline will be constructed within the public right-of-way of E. La Cadena Drive, generally between Oxford Street and Columbia Avenue.

PROJECT STATUS
This project is underway with an anticipated completion date of Summer 2028.

OPERATING BUDGET IMPACT
Operating impacts are currently unknown. As the project gets nearer to completion the City will evaluate the impacts.

PROJECT FUNDING OVERVIEW

Total Project Cost	Prior Years Funding	Five-Year Plan	Remaining Needed
$ 47,392,485	$ 3,722,034	$ -	$ 43,670,451

TWO-YEAR BUDGET AND FIVE-YEAR PLAN

Funding Source	FY 2026/27	FY 2027/28	FY 2028/29	FY 2029/30	FY 2030/31	Total
N/A	$ -	$ -	$ -	$ -	$ -	$ -
Total Funding	**$ -**	**$ -**	**$ -**	**$ -**	**$ -**	**$ -**

POTABLE/IRRIGATION WELL REPLACEMENTS

PRIORITIZATION CATEGORIES

- ☐ Risk to Health, Safety and Environment
- ☐ Regulatory or Mandated Requirements
- ☒ Asset Condition, Annual Recurring Costs, and Asset Longevity
- ☒ Community Investment and Economic Prosperity
- ☒ Level and Quality of Service
- ☐ Sustainability and Conservation
- ☒ Funding Availability
- ☐ Project Readiness
- ☒ Multiple Category Benefit and Bundling Opportunities

NEW OR EXISTING

- ☒ New Infrastructure or Facility
- ☐ Existing Infrastructure or Facility



PROJECT NUMBER 470833W
PROJECT CATEGORY Water
PROJECT LOCATION Citywide
COUNCIL WARD All Wards

PROJECT DESCRIPTION
The well replacement program is an ongoing program that involves the construction of new and/or replacement potable/irrigation well facilities. The main purpose of this program is to design and construct new wells to replace existing, aged, or under-producing wells in order to meet the demands of the City and RPU customers. Wells are facilities that pump the City's water supply from underground aquifers. Wells typically can last between 70 to 90 years.

PROJECT STATUS
This program is ongoing; well replacements are prioritized based on performance, age, and feedback from Water Operations staff.

OPERATING BUDGET IMPACT
This is an ongoing program which replaces existing and/or adds new infrastructure to the water system and will not require additional operating and maintenance costs.

PROJECT FUNDING OVERVIEW

Total Project Cost	Prior Years Funding	Five-Year Plan	Remaining Needed
Ongoing	$ 15,782,313	$ 21,654,430	Ongoing

TWO-YEAR BUDGET AND FIVE-YEAR PLAN

Funding Source	FY 2026/27	FY 2027/28	FY 2028/29	FY 2029/30	FY 2030/31	Total
520 - Water Fund	$ 5,000,000	$ 1,654,430	$ 5,000,000	$ 5,000,000	$ 5,000,000	$ 21,654,430
Total Funding	**$ 5,000,000**	**$ 1,654,430**	**$ 5,000,000**	**$ 5,000,000**	**$ 5,000,000**	**$ 21,654,430**

PUMP STATION REPLACEMENTS

PRIORITIZATION CATEGORIES

- ☒ Risk to Health, Safety and Environment
- ☐ Regulatory or Mandated Requirements
- ☒ Asset Condition, Annual Recurring Costs, and Asset Longevity
- ☒ Community Investment and Economic Prosperity
- ☒ Level and Quality of Service
- ☐ Sustainability and Conservation
- ☒ Funding Availability
- ☐ Project Readiness
- ☒ Multiple Category Benefit and Bundling Opportunities

NEW OR EXISTING

- ☒ New Infrastructure or Facility
- ☒ Existing Infrastructure or Facility



PROJECT NUMBER 470802W
PROJECT CATEGORY Water
PROJECT LOCATION Citywide
COUNCIL WARD All Wards

PROJECT DESCRIPTION
The pump station replacement program involves designing and constructing pump stations to replace or rehabilitate existing deficient and aged pump stations throughout the water system. This program is designed to replace or rehabilitate existing pump stations that are deficient or aged based on priority. Pump stations are the facilities that deliver water to the different neighborhoods throughout the City. Pumps and motors can typically last about 7 to 15 years; however, the buildings can last as much as 70 to 80 years. Electrical equipment ranges between 5 to 15 years.

PROJECT STATUS
Facilities are prioritized based on ongoing analysis of system needs as well as age and condition of existing equipment.

OPERATING BUDGET IMPACT
This is an ongoing program which replaces existing infrastructure in the water system and will not require additional operating and maintenance costs.

PROJECT FUNDING OVERVIEW

Total Project Cost	Prior Years Funding	Five-Year Plan	Remaining Needed
Ongoing	$ 12,050,392	$ 1,500,000	Ongoing

TWO-YEAR BUDGET AND FIVE-YEAR PLAN

Funding Source	FY 2026/27	FY 2027/28	FY 2028/29	FY 2029/30	FY 2030/31	Total
520 - Water Fund	$ 300,000	$ 300,000	$ 300,000	$ 300,000	$ 300,000	$ 1,500,000
Total Funding	**$ 300,000**	**$ 300,000**	**$ 300,000**	**$ 300,000**	**$ 300,000**	**$ 1,500,000**

RECYCLED WATER FACILITIES - RIVERSIDE HABITAT PARKS AND WATER PROJECT

PRIORITIZATION CATEGORIES

- ☐ Risk to Health, Safety and Environment
- ☐ Regulatory or Mandated Requirements
- ☐ Asset Condition, Annual Recurring Costs, and Asset Longevity
- ☒ Community Investment and Economic Prosperity
- ☒ Level and Quality of Service
- ☒ Sustainability and Conservation
- ☒ Funding Availability
- ☒ Project Readiness
- ☒ Multiple Category Benefit and Bundling Opportunities

NEW OR EXISTING

- ☒ New Infrastructure or Facility
- ☐ Existing Infrastructure or Facility



PROJECT NUMBER 470811W
PROJECT CATEGORY Water
PROJECT LOCATION Various
COUNCIL WARD 3, 5

PROJECT DESCRIPTION
This project provides for the design and construction of necessary facilities to produce and pump recycled water at the City's Regional Water Quality Control Plant, in addition to the on-site recycled water infrastructure and retrofit work to convert customers over to recycled water use. Pipelines typically can last about 70 years.

PROJECT STATUS
Future recycled water system expansion is being planned and coordinated with San Bernardino Valley Municipal Water District on the joint Riverside Habitat Parks and Water Project (West Branch), and funding needs will be programmed into the CIP budget once they've been identified.

OPERATING BUDGET IMPACT
Following the completion of the project, there will be no significant fiscal impact outside of the annual facility maintenance costs which will be included in Water's operating budgets. Estimated amount of operating budget impacts will be evaluated closer to project completion.

PROJECT FUNDING OVERVIEW

Total Project Cost	Prior Years Funding	Five-Year Plan	Remaining Needed
$ 24,606,981	$ 20,101,981	$ 4,505,000	$ -

TWO-YEAR BUDGET AND FIVE-YEAR PLAN

Funding Source	FY 2026/27	FY 2027/28	FY 2028/29	FY 2029/30	FY 2030/31	Total
520 - Water Fund	$ 4,505,000	$ -	$ -	$ -	$ -	$ 4,505,000
Total Funding	**$ 4,505,000**	**$ -**	**$ -**	**$ -**	**$ -**	**$ 4,505,000**

SCADA UPGRADE & SYSTEM AUTOMATION

PRIORITIZATION CATEGORIES

- ☒ Risk to Health, Safety and Environment
- ☐ Regulatory or Mandated Requirements
- ☒ Asset Condition, Annual Recurring Costs, and Asset Longevity
- ☒ Community Investment and Economic Prosperity
- ☒ Level and Quality of Service
- ☐ Sustainability and Conservation
- ☒ Funding Availability
- ☒ Project Readiness
- ☒ Multiple Category Benefit and Bundling Opportunities

NEW OR EXISTING

- ☒ New Infrastructure or Facility
- ☒ Existing Infrastructure or Facility



PROJECT NUMBER 470832W
PROJECT CATEGORY Water
PROJECT LOCATION Citywide
COUNCIL WARD All Wards

PROJECT DESCRIPTION
This project provides for the necessary upgrades to the water system which monitors and controls operation of the water transmission and distribution 24 hours a day, 365 days a year. This includes physical security upgrades required for regulatory compliance as part of system improvements. It also includes hardware and network upgrades as part of advanced technology improvements. The expected life cycle for these upgrades is about 10 to 15 years.

PROJECT STATUS
The project is in progress and expected to be implemented in December 2028.

OPERATING BUDGET IMPACT
Following the completion of the project, there will be no significant fiscal impact outside of the annual software license and maintenance costs which will be included in Water's operating budgets. Estimated amount of operating budget impacts will be evaluated closer to project completion.

PROJECT FUNDING OVERVIEW

Total Project Cost	Prior Years Funding	Five-Year Plan	Remaining Needed
$ 12,071,266	$ 10,548,123	$ 1,523,143	$ -

TWO-YEAR BUDGET AND FIVE-YEAR PLAN

Funding Source	FY 2026/27	FY 2027/28	FY 2028/29	FY 2029/30	FY 2030/31	Total
520 - Water Fund	$ 1,523,143	$ -	$ -	$ -	$ -	$ 1,523,143
Total Funding	**$ 1,523,143**	**$ -**	**$ -**	**$ -**	**$ -**	**$ 1,523,143**

SEVEN OAKS DAM CONSERVATION - ENHANCED RECHARGE

PRIORITIZATION CATEGORIES

- ☐ Risk to Health, Safety and Environment
- ☐ Regulatory or Mandated Requirements
- ☐ Asset Condition, Annual Recurring Costs, and Asset Longevity
- ☒ Community Investment and Economic Prosperity
- ☐ Level and Quality of Service
- ☒ Sustainability and Conservation
- ☒ Funding Availability
- ☒ Project Readiness
- ☒ Multiple Category Benefit and Bundling Opportunities

NEW OR EXISTING

- ☒ New Infrastructure or Facility
- ☐ Existing Infrastructure or Facility



PROJECT NUMBER 470813W **COUNCIL WARD** All Wards
PROJECT CATEGORY Water
PROJECT LOCATION Four miles northeast of Redlands, near Mentone

PROJECT DESCRIPTION
This project is a multi-agency effort that provides for the design and construction of projects to capture and divert local stormwater for groundwater recharge on property owned or controlled by the San Bernardino Valley Water Conservation District to increase available groundwater supplies. This will allow all partners who participate in this project (including Riverside) to have perpetual water extraction rights.

PROJECT STATUS
Due to environmental permitting and other constraints, the Project has been strategically proceeding in a three phased approach. Phase 1A of the Enhanced Recharge Project was completed in 2019. This phase includes intake improvements, a sedimentation basin, and new sections of a pipeline to transport water to Phase 1B facilities. Phase 1B of the Enhanced Recharge Project started in Spring 2023 with a completed date in Winter 2024 and it included 20 new recharge basins, improved flood control structures, and inter-basin conveyance infrastructure. Phase 1C will complete the project by improving the Intake Structure and building debris removal equipment. This phase is expected to begin in fiscal year 2028, pending federal permits (408 and 1602).

OPERATING BUDGET IMPACT
To be determined. Annual maintenance costs are being finalized among the partner agencies in a formal agreement and will be going to each agency for approval.

PROJECT FUNDING OVERVIEW

Total Project Cost	Prior Years Funding	Five-Year Plan	Remaining Needed
$ 25,888,249	$ 23,788,249	$ 2,100,000	$ -

TWO-YEAR BUDGET AND FIVE-YEAR PLAN

Funding Source	FY 2026/27	FY 2027/28	FY 2028/29	FY 2029/30	FY 2030/31	Total
520 - Water Fund	$ 1,000,000	$ 1,100,000	$ -	$ -	$ -	$ 2,100,000
Total Funding	**$ 1,000,000**	**$ 1,100,000**	**$ -**	**$ -**	**$ -**	**$ 2,100,000**

SYSTEM EXPANSION

PRIORITIZATION CATEGORIES

- ☐ Risk to Health, Safety and Environment
- ☐ Regulatory or Mandated Requirements
- ☐ Asset Condition, Annual Recurring Costs, and Asset Longevity
- ☒ Community Investment and Economic Prosperity
- ☒ Level and Quality of Service
- ☐ Sustainability and Conservation
- ☒ Funding Availability
- ☒ Project Readiness
- ☒ Multiple Category Benefit and Bundling Opportunities

NEW OR EXISTING

- ☒ New Infrastructure or Facility
- ☐ Existing Infrastructure or Facility



PROJECT NUMBER 470701W
PROJECT CATEGORY Water
PROJECT LOCATION Citywide
COUNCIL WARD All Wards

PROJECT DESCRIPTION
This program includes designing and constructing new water system infrastructure (water mains, valves, fire hydrants, and services) to serve new residential and commercial developments as needed to support growth within the city service area.

PROJECT STATUS
This program is ongoing yearly and is supported in part by development fees.

OPERATING BUDGET IMPACT
This is an ongoing program which adds new infrastructure to the water system and will not require additional operating and maintenance costs.

PROJECT FUNDING OVERVIEW

Total Project Cost	Prior Years Funding	Five-Year Plan	Remaining Needed
Ongoing	$ 51,127,228	$ 8,467,286	Ongoing

TWO-YEAR BUDGET AND FIVE-YEAR PLAN

Funding Source	FY 2026/27	FY 2027/28	FY 2028/29	FY 2029/30	FY 2030/31	Total
520 - Water Fund	$ 2,287,000	$ 2,287,000	$ 2,092,500	$ 887,743	$ 913,043	$ 8,467,286
Total Funding	**$ 2,287,000**	**$ 2,287,000**	**$ 2,092,500**	**$ 887,743**	**$ 913,043**	**$ 8,467,286**

TRANSMISSION MAINS

PRIORITIZATION CATEGORIES

- ☒ Risk to Health, Safety and Environment
- ☐ Regulatory or Mandated Requirements
- ☒ Asset Condition, Annual Recurring Costs, and Asset Longevity
- ☒ Community Investment and Economic Prosperity
- ☒ Level and Quality of Service
- ☐ Sustainability and Conservation
- ☒ Funding Availability
- ☒ Project Readiness
- ☒ Multiple Category Benefit and Bundling Opportunities

NEW OR EXISTING

- ☐ New Infrastructure or Facility
- ☒ Existing Infrastructure or Facility



PROJECT NUMBER 470735W
PROJECT CATEGORY Water
PROJECT LOCATION Citywide
COUNCIL WARD All Wards

PROJECT DESCRIPTION
This is an ongoing program that involves the design and construction of water transmission mains to replace Techite pipe and aged and undersized existing transmission mains throughout the City's water system to improve system reliability and efficiency.

PROJECT STATUS
This ongoing program currently prioritizes the removal and replacement of Techite transmission mains. The Techite pipe within Magnolia Avenue has been fully replaced over the past 5 years. Techite replacement with Lincoln Avenue has begun.

OPERATING BUDGET IMPACT
This is an ongoing program which replaces existing infrastructure in the water system and will not require additional operating and maintenance costs.

PROJECT FUNDING OVERVIEW

Total Project Cost	Prior Years Funding	Five-Year Plan	Remaining Needed
Ongoing	$ 56,718,928	$ 40,446,530	Ongoing

TWO-YEAR BUDGET AND FIVE-YEAR PLAN

Funding Source	FY 2026/27	FY 2027/28	FY 2028/29	FY 2029/30	FY 2030/31	Total
520 - Water Fund	$ 8,427,131	$ 9,481,125	$ 10,346,082	$ 8,997,053	$ 3,195,139	$ 40,446,530
Total Funding	**$ 8,427,131**	**$ 9,481,125**	**$ 10,346,082**	**$ 8,997,053**	**$ 3,195,139**	**$ 40,446,530**

UPPER SANTA ANA RIVER HABITAT CONSERVATION PLAN

PRIORITIZATION CATEGORIES

- ☐ Risk to Health, Safety and Environment
- ☐ Regulatory or Mandated Requirements
- ☐ Asset Condition, Annual Recurring Costs, and Asset Longevity
- ☒ Community Investment and Economic Prosperity
- ☐ Level and Quality of Service
- ☒ Sustainability and Conservation
- ☐ Funding Availability
- ☐ Project Readiness
- ☒ Multiple Category Benefit and Bundling Opportunities

NEW OR EXISTING

- ☒ New Infrastructure or Facility
- ☐ Existing Infrastructure or Facility



PROJECT NUMBER 470819W
PROJECT CATEGORY Water
PROJECT LOCATION Citywide
COUNCIL WARD All Wards

PROJECT DESCRIPTION
This is an interagency project to mitigate the endangered Santa Ana Sucker along with twelve other covered species to allow for the construction of water supply projects on a regional scale. This project will also create a mitigation bank to be used by each of the thirteen partner agencies, including Riverside.

PROJECT STATUS
This project is in the planning phase. There is a cost-sharing agreement in negotiation with the San Bernardino Valley Municipal Water District as the lead agency, and ongoing coordination to establish a mitigation bank for sensitive wildlife habitat to facilitate the construction of water supply projects.

OPERATING BUDGET IMPACT
This is an ongoing project and will not require additional operating and maintenance costs.

PROJECT FUNDING OVERVIEW

Total Project Cost	Prior Years Funding	Five-Year Plan	Remaining Needed
Ongoing	$ 325,000	$ -	Ongoing

TWO-YEAR BUDGET AND FIVE-YEAR PLAN

Funding Source	FY 2026/27	FY 2027/28	FY 2028/29	FY 2029/30	FY 2030/31	Total
N/A	$ -	$ -	$ -	$ -	$ -	$ -
Total Funding	**$ -**	**$ -**	**$ -**	**$ -**	**$ -**	**$ -**

WATER STOCK

PRIORITIZATION CATEGORIES

- ☐ Risk to Health, Safety and Environment
- ☐ Regulatory or Mandated Requirements
- ☐ Asset Condition, Annual Recurring Costs, and Asset Longevity
- ☒ Community Investment and Economic Prosperity
- ☐ Level and Quality of Service
- ☐ Sustainability and Conservation
- ☒ Funding Availability
- ☐ Project Readiness
- ☒ Multiple Category Benefit and Bundling Opportunities

NEW OR EXISTING

- ☐ New Infrastructure or Facility
- ☒ Existing Infrastructure or Facility



PROJECT NUMBER 470705W
PROJECT CATEGORY Water
PROJECT LOCATION Citywide
COUNCIL WARD All Wards

PROJECT DESCRIPTION
This is an ongoing program that involves the purchase of outstanding shares of the Gage Canal Company and water stock of other mutual water companies as shares become available to provide additional water rights for the City.

PROJECT STATUS
This program is ongoing yearly.

OPERATING BUDGET IMPACT
The purchase of water stock will not require additional operating and maintenance costs.

PROJECT FUNDING OVERVIEW

Total Project Cost	Prior Years Funding	Five-Year Plan	Remaining Needed
Ongoing	$ 1,414,352	$ 100,000	Ongoing

TWO-YEAR BUDGET AND FIVE-YEAR PLAN

Funding Source	FY 2026/27	FY 2027/28	FY 2028/29	FY 2029/30	FY 2030/31	Total
520 - Water Fund	$ 25,000	$ -	$ 25,000	$ 25,000	$ 25,000	$ 100,000
Total Funding	**$ 25,000**	**$ -**	**$ 25,000**	**$ 25,000**	**$ 25,000**	**$ 100,000**

This Page Intentionally Left Blank

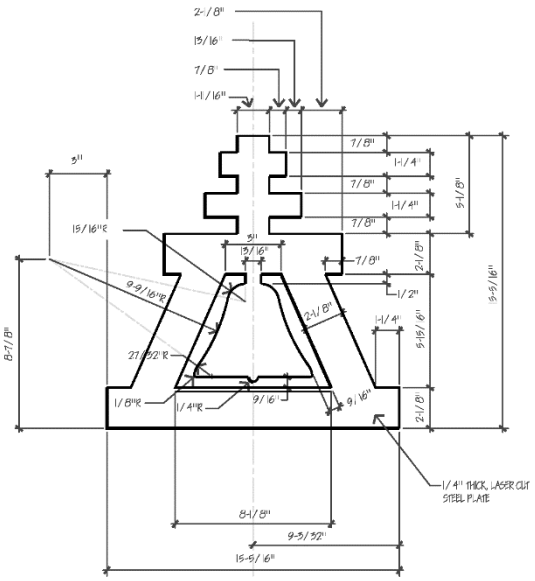



GLOSSARY

CITY OF RIVERSIDE

GLOSSARY OF TERMS

Appropriation
A specific amount of money authorized by the City Council for an approved purpose or individual project.

Bond
A certificate of debt issued by an entity, guaranteeing payment of the original investment, plus interest, by a specified future date.

Budget
An annual financial plan that identifies revenues, types, and levels of services to be provided, and the amount of funds that can be spent.

Budget Calendar
The schedule of key dates or milestones which the City follows in the preparation and adoption of the budget.

Capital Assets
Assets that add to the long-term net worth of the City.

Capital Expenditures
Capital expenditures are related to major construction projects such as roads, buildings, and parks. These expenditures are typically capitalized and depreciated over time.

Capital Improvements
Capital Improvements involve the construction or major repair of municipal buildings and facilities, such as City Hall, libraries, parks, recreational facilities, the museum, storm drains, the airport, streets, the sewer, electric, and water systems, etc.

Capital Improvement Program (CIP)
A multi-year financial plan in which needed improvements to the City's facilities and infrastructure are identified, priced, and prioritized.

Capital Projects
Projects that purchase or construct capital assets. A capital project may encompass the purchase of land and/or the construction of a building or facility, infrastructure improvements, or major purchases of costly items with an extended life span.

Debt Service
The payment of principal and interest on borrowed funds, such as bonds.

Department
An organizational unit comprised of programs or divisions. Examples include the Police Department, Library, and Human Resources Department.

Enterprise Fund
A fund type established to account for the total cost of selected governmental facilities and services that are operated similar to private enterprises.

Expenditure
The actual spending of funds set aside by appropriation for identified goods and services.

Fee
A general term used for any charge levied by the government for providing a service or performing an activity.

Fiscal Year
A twelve-month period of time designated as the budget year. The City of Riverside's Fiscal Year is July 1 to June 30.

Fixed Assets
Resources owned by the City intended for long-term use, such as land, buildings, and machinery.

Fund
A set of inter-related accounts to record revenues and expenditures associated with a specific purpose.

Fund Balance
The amount of financial resources in a given fund. While some fund balances are restricted and non-spendable as defined by the Governmental Accounting Standards Board, other fund balances are "available" and are not restricted to fund existing commitments and are therefore available for any use permitted for the fund.

Funded Capital Projects
Projects for which funding is currently available and identified.

Infrastructure
Facilities that support the daily life and growth of the City, for example, roads, water lines, and sewers.

Operating Budget
The annual appropriation of funds for on-going program costs, which include salaries, benefits, maintenance, operation, and capital outlay items.

Operating Budget Impact
Recurring operating expenditures or savings resulting from the completion of a capital improvement project.

Restricted Non-City Funds
Restricted Non-City Funds are funds requested from non-City sources that have not yet been guaranteed. These funds are project-specific and must be utilized for the project for which they are designated.

Revenues
Funds received from the collection of taxes, fees, permits, licenses, interest, and grants during the fiscal year.

Riverside County Transportation Commission (RCTC)
RCTC is the regional planning organization responsible for the distribution of Federal, State, and Local transportation funds.

Special Revenue Fund
Funds that track the expenditure of revenues received for a specific purpose; the purpose is usually defined by the grantor or provider of the resources.

Unfunded Capital Projects
Projects for which funding is currently unavailable.



APPENDICES

APPENDIX A: SCHEDULE OF UNFUNDED CAPITAL PROJECTS

SCHEDULE OF UNFUNDED CAPITAL PROJECTS			
PRIORITY ORDER	**PROJECTS BY CATEGORY**	**TOTAL ESTIMATED PROJECT COST**	**UNFUNDED AMOUNT**
AIRPORT			
1	Critical Airport Improvements	$ 3,720,000	$ 1,720,000
2	Runway 9 PAPI Replacement Design Phase	195,000	195,000
3	Flight Service Station Building Reconstruction	2,500,000	2,500,000
4	Airport Runway Safety Area Erosion Control Construction	1,800,000	1,800,000
5	Runway 9 PAPI Replacement Construction Phase	333,000	333,000
6	Parking Lot Paving	4,000,000	4,000,000
7	Airport Turf Replacement	100,000	100,000
Total Airport		**$ 12,648,000**	**$ 10,648,000**
ELECTRIC			
1	Battery Energy Storage System Project	$ 4,000,000	$ 4,000,000
2	Springs Substation Bank Addition	17,000,000	17,000,000
3	Northside Area 12kV Circuit Feeders	9,000,000	9,000,000
4	Distribution Automation Reclosers and Automated Switches	4,500,000	4,500,000
5	Third Street Electrical Facilities Relocation	3,500,000	3,500,000
6	Distribution Transformer Load Management System	1,500,000	1,500,000
Total Electric		**$ 39,500,000**	**$ 39,500,000**
INFORMATION AND TECHNOLOGY			
1	Enterprise Application Modernization	$ 25,000,000	$23,029,637
2	Work-Order/Asset Management System Major Upgrade	3,234,900	3,234,900
Total Information and Technology		**$ 28,234,900**	**$ 26,264,537**
MUNICIPAL BUILDING AND FACILITIES			
1	Convention Center Boiler Replacement	$ 172,500	$ 172,500
2	Citywide ADA Facility Assessment - Identified Citywide	500,000	500,000
3	The Box - Roof Repairs	90,563	90,563
4	Lincoln PD Generator Replacement	75,000	75,000
5	Muni Auditorium - Elevator/Lift for ADA Access to Third Floor	383,985	383,985
6	Magnolia Shopping Center - Underground Water Line Replacement	127,995	127,995
7	Harada House and Interpretive Center	7,890,028	340,028
8	City Hall Transfer Switch	300,000	300,000
9	Magnolia Shopping Center - Parking Lot Rehab	1,023,960	1,023,960
10	The Box - HVAC	241,500	241,500
11	Riverside Municipal Auditorium Roof	63,998	63,998
12	Fire Station 3 Roof	178,500	178,500
13	Convention Center Cooling Tower Replacement	72,957	72,957
14	Magnolia Shopping Center - Common Area Repairs	63,998	63,998
15	The Fox - Plumbing	90,563	90,563
16	The Fox - HVAC	120,750	120,750
17	Orange Station Basement Elevator	127,995	127,995

SCHEDULE OF UNFUNDED CAPITAL PROJECTS

PRIORITY ORDER	PROJECTS BY CATEGORY	TOTAL ESTIMATED PROJECT COST	UNFUNDED AMOUNT
18	The Fox - Roof Security	241,500	241,500
19	Lincoln Parking Lot	511,980	511,980
20	Riverside Municipal Auditorium ADA Elevator	127,995	127,995
21	The Box - Exterior Paint	157,500	157,500
22	Corporation Yard Parking Lot Repaving - Phase III	1,449,000	1,449,000
23	Muni Auditorium - Carpet Replacement & Wood Floor Repair	191,993	191,993
24	Museum Storage Collection Facility	23,000,000	23,000,000
25	Fire Station 11, 12, 13 - Apparatus Door Replacement	345,000	345,000
26	Lincoln Security Improvements Cameras & Card Readers	469,442	469,442
27	Riverside Municipal Auditorium Refurbishment	339,187	339,187
28	Convention Center CCTV System	500,000	500,000
29	Convention Center Electronic Access Control System	345,000	345,000
30	Convention Center Weapon Detection System	20,000,000	20,000,000
31	Convention Center Carpet Replacement	408,100	408,100
32	Riverside Municipal Auditorium HVAC	159,994	159,994
33	Riverside Municipal Auditorium Electrical Upgrade	255,990	255,990
34	Box Theater Lobby Carpet	120,750	120,750
35	The Box - Interior Paint	120,750	120,750
36	PD Aviation Roll Up Gates	31,625	31,625
37	Fire Station 10 Replacement	18,000,000	18,000,000
38	Fire Station 4 Replacement	13,800,000	13,800,000
39	Fire Station 8 Replacement	13,800,000	13,800,000
40	Fire Station 7 Replacement	13,800,000	13,800,000
41	Fire Station 3 Replacement	13,800,000	13,800,000
42	Fire Station 2 Replacement	13,800,000	13,800,000
43	Fire Station 9 Kitchen Remodel	120,000	120,000
44	The Fox - Exterior and Interior Paint	900,000	900,000
45	Riverside Municipal Auditorium Rigging/Stage Safety	127,995	127,995
46	Magnolia Station PD Forensic Lab Ventilation	181,125	181,125
47	The Fox - Theater Lighting	120,750	120,750
48	Fox Theater Carpet Replacement	469,315	469,315
49	Magnolia Station Security Cameras	57,500	57,500
50	Rumsey 1 - HVAC System Upgrade and Sprinkler Retrofit	446,775	446,775
51	Rumsey 2 - Fire Panel, HVAC, Compact Shelving, Sprinkler Retrofit	690,000	690,000
52	Convention Center Bollards	28,750	28,750
53	Convention Center Bollards 5th Street Plaza	57,500	57,500
54	Magnolia Station Remedial Work	31,999	31,999
55	PD Aviation Hangar Door	31,625	31,625
56	PD Aviation Bay Flooring	50,600	50,600
57	Riverside Municipal Auditorium Stage Lift	127,995	127,995
58	Fire Station 3 Metal Parking Structure/Cover	238,680	238,680
59	Convention Center Plaza Lighting	63,998	63,998
60	Fire Station 4 Asphalt	60,375	60,375

SCHEDULE OF UNFUNDED CAPITAL PROJECTS

PRIORITY ORDER	PROJECTS BY CATEGORY	TOTAL ESTIMATED PROJECT COST	UNFUNDED AMOUNT
61	Lincoln Above Ground Gas Tank	255,990	255,990
62	Magnolia Station Slurry Employee Parking	95,996	95,996
63	PD Aviation Barb Wire	94,875	94,875
64	PD Aviation Rear Gate Automation	40,250	40,250
65	Lincoln PD TSU Vehicle Canopy	75,000	75,000
66	City Hall - Install Fire Suppression System in Basement (IT System)	301,875	301,875
67	Municipal Auditorium - New Electronic Sign	63,998	63,998
68	Fire EOC Data Center Sprinkler Removal/Security Improvements	643,632	643,632
69	Fire Station 10 - Bath, Kitchen & Rec Room Remodel	198,088	198,088
70	Fire Station 10 - Security Fencing	51,198	51,198
71	Fire Station 12 - Kitchen Remodel	92,000	92,000
72	Fire Station 2 - Battalion Office & Bath Remodel	126,500	126,500
73	Magnolia PD Station Aluminum Cover for Vehicles	57,500	57,500
74	Lincoln Station - Parking Cover	51,198	51,198
75	Fire Station 12 - Carpet/Flooring	31,999	31,999
76	Convention Center Internet Technology	127,995	127,995
77	Fox Pillar Cracks	27,825	27,825
78	Lincoln PD Roll Call RM Extension	603,750	603,750
79	Fox Roof Replacement	450,000	450,000
80	Fire Station 1 Concrete	24,150	24,150
81	Fire Warehouse	7,000,000	7,000,000
82	Aviation PD Hangar Roofing	750,000	750,000
83	City Hall Fourth Floor Shade Structure	300,000	300,000
84	Convention Center Expansion	165,000,000	165,000,000
85	City Hall Fire alarm panel upgrades	1,000,000	1,000,000
86	Cheech Basement Renovation	12,000,000	12,000,000
87	Northside Agricultural Innovation Center Phase I	13,079,141	6,800,617
88	Fire Station 5 Roof Replacement	350,000	350,000
89	Cal Tower Ground Floor Renovations	1,000,000	1,000,000
Total Municipal Buildings and Facilities		**$ 354,998,040**	**$ 341,169,516**
PARKS, RECREATION, AND COMMUNITY SERVICES			
1	Bobby Bonds Pool	$ 2,000,000	$ 2,000,000
2	Special Transportation Zero Emission Infrastructure	7,500,000	2,107,927
3	Goeske Senior Center East Side Restroom Remodel	400,000	400,000
4	Santa Ana River Greenway Phase I - Riverside Gateway	7,420,000	7,420,000
5	Myra Linn Park Redevelopment	8,755,000	8,755,000
6	Victoria Avenue Trail Jefferson to Washington	7,280,000	7,280,000
7	Victoria Avenue Trail Gibson to Jefferson	11,760,000	11,760,000
8	Mitchell Avenue Trail Campbell to Hole	8,960,000	8,960,000
9	Jurupa Avenue Trailhead - Riverside Gateway Improvements	5,880,000	5,880,000
10	Bobby Bonds Park Playground Area Lighting Improvement	56,000	56,000
11	Fairmount Park Lake Evans Water Quality (SolarBee)	98,000	98,000

SCHEDULE OF UNFUNDED CAPITAL PROJECTS

PRIORITY ORDER	PROJECTS BY CATEGORY	TOTAL ESTIMATED PROJECT COST	UNFUNDED AMOUNT
12	Citywide Parking Lot Rehabilitation	721,000	721,000
13	Riverwalk Golden/Schuyler Playground Surfacing	154,000	154,000
14	Sycamore Highlands Park Playground Surface Replacement	56,000	56,000
15	Park System ADA Improvements	66,150,000	66,150,000
16	Mount Rubidoux Park Trails and Firebreak Repair and Modification	665,475	665,475
17	Riverwalk Playground Surfacing	154,000	154,000
18	Fairmount Park Lake Evans Lakeshore Access	950,000	475,000
19	Bordwell Park ADA Walkway	56,000	56,000
20	Bobby Bonds Parks Cesar Chavez Community Center Restroom Renovation	214,000	214,000
21	Don Lorenzi Park ADA Improvements	126,000	126,000
22	Fairmount Park Renovate the Old Bldg. for Bike Rental	56,000	56,000
23	Mount Rubidoux Park Shade Structures	266,000	266,000
24	Nichols Park Improvements	945,000	945,000
25	Villegas Park Community Center Area Roof Replacement	315,000	315,000
26	Loring Park - Riverside Gateway Improvements	4,200,000	4,200,000
27	Arlington Heights Sports Park Wading Pool Filtration System	539,000	539,000
28	Bobby Bonds Park Youth Opportunity Center Roof Skylight Repair	56,000	56,000
29	Bryant Park Tennis Court Lighting	280,000	280,000
30	Citywide Park Land Acquisition	161,000	161,000
31	Citywide Park Land Acquisition II	45,570,000	45,570,000
32	Citywide Automatic Door Locking System	406,000	406,000
33	Citywide Water Conservation Projects	721,000	721,000
34	Collett Park Shade Shelter Wood Lattice Roof Replacements	44,800	44,800
35	Don Derr Park Basketball Court Resurfacing	49,000	49,000
36	Don Jones Park Concession Building Replacement	665,000	665,000
37	Don Lorenzi Park Restroom	665,000	665,000
38	Doty Trust Park Wading Pool	490,000	490,000
39	Fairmount Park Splash Pad Pool Filtration System	490,000	490,000
40	Indian Hill Acquisition	560,000	560,000
41	Islander Park Wading Pool Replacement	560,000	560,000
42	Lincoln Park Basketball Court Improvements	49,000	49,000
43	Orange Terrace Park Wading Pool	476,000	476,000
44	White Park ADA Concrete Replacement	214,000	214,000
45	Bordwell Park Modernize Park Restrooms (Kansas Side)	245,000	245,000
46	Castleview Park Construction of Park	20,000,000	20,000,000
47	Citywide Pool Refurbishment	1,876,000	1,876,000
48	Citywide Community Center Wi-Fi	231,000	231,000
49	Don Jones Park Decomposed Path 450LF	77,000	77,000
50	Don Jones Park Decomposed Path 650LF	115,500	115,500
51	Don Jones Park Fence Adjustment	126,000	126,000
52	Fairmount Park Spoils Area - Invasive Spp. Clearance	126,000	126,000
53	Fairmount Park Wilderness Area Improvements	2,170,000	2,170,000

SCHEDULE OF UNFUNDED CAPITAL PROJECTS

PRIORITY ORDER	PROJECTS BY CATEGORY	TOTAL ESTIMATED PROJECT COST	UNFUNDED AMOUNT
54	Goeske Senor Center Parking Lot Improvements	350,000	350,000
55	Hole Lake Future Park Site	22,000,000	22,000,000
56	Hunt Park Pool Filter Replacements (3 Tanks)	70,000	70,000
57	Hunter Park Playground Shade	112,000	112,000
58	Islander Park Pool Filter Tank Replacement (3 Tanks)	70,000	70,000
59	Martha McLean Design Study	84,000	84,000
60	Rutland Park Par Course Replacement with New Equipment	84,000	84,000
61	Shamel Park Pool Filter Replacement (3 Tanks)	70,000	70,000
62	Low Park Masterplan	7,140,000	7,140,000
63	Arlington Park Shade Structure	165,200	165,200
64	Bergamont Park Playground Shade Sails	126,000	126,000
65	Bobby Bonds Park Cesar Chavez Roof Replacement	490,000	490,000
66	Carlson Park Irrigation	182,000	182,000
67	Collett Park Improvements	168,000	168,000
68	Don Derr Park Restroom & Concession Building Replacement	1,820,000	1,820,000
69	Fairmount Park Boathouse Deck Repairs	224,000	224,000
70	Fairmount Park Golf Course New Netting Along Freeway	434,000	434,000
71	Fairmount Park Golf Course New Net and Posts Along Field Lane	301,000	301,000
72	Fairmount Park Golf Course Net Replacement	98,000	98,000
73	Fairmount Park Lake Evans Spillway Improvements, Erosion Control	224,000	224,000
74	Fairmount Park Road Maintenance on Dexter East Side of Lake	350,000	350,000
75	Fairmount Park Road Maintenance on Other Streets	350,000	350,000
76	Fairmount Park Storm Drain Clearing & Universal Playground Parking Lot	126,000	126,000
77	Goeske Park Senior Center Replace Skylight and Repair Roof	126,000	126,000
78	La Sierra Park Exercise Stations	182,000	182,000
79	Orange Terrace Park Community Center Gym Floor Replacement	301,000	301,000
80	Airport Park	2,170,000	2,170,000
81	Reid Park Basketball Hoop Adjustment System	42,000	42,000
82	Sycamore Canyon Wilderness Park	2,884,000	2,884,000
83	Sycamore Highlands Park Wading Pool	469,000	469,000
84	Taft Park Playground Shade Structure	140,000	140,000
85	Villegas Park Master Plan Phase II Exercise Stations	280,000	280,000
86	Fairmount Park University Wash Renovation	5,625,000	3,625,000
87	Carlson Park - Riverside Gateway Improvements	2,800,000	2,800,000
88	Citywide Trails - MWD Box Springs Feeder Trail Improvements	9,338,000	9,338,000
89	Citywide Trails - Seven Mile Trail Improvements	29,716,050	29,716,050
90	Don Jones Park Exercise Stations	168,000	168,000
91	Don Lorenzi Park Exercise Path	175,000	175,000
92	Doty Trust Park Slope Stabilization at Back Open Space Trail Connections	98,000	98,000
93	Fairmount Park Golf Course Cart Paths Renovation	385,000	385,000
94	Fairmount Park Locomotive Repairs/Painting (Specialty Paint)	154,000	154,000
95	Fairmount Park Landscape and Turf Conversion	182,000	182,000
96	Fairmount Park North Hill (Curb and Gutter, Sidewalk, Trail, Picnic Table)	1,120,000	1,120,000

SCHEDULE OF UNFUNDED CAPITAL PROJECTS

PRIORITY ORDER	PROJECTS BY CATEGORY	TOTAL ESTIMATED PROJECT COST	UNFUNDED AMOUNT
97	Fairmount Park Repair Plaster/Paint Old RR Building	42,000	42,000
98	Islander Park Improvements	5,040,000	5,040,000
99	La Sierra Park Community Center HVAC Replacement	84,000	84,000
100	La Sierra Park Community Center Paint Interior and Exterior	56,000	56,000
101	Lincoln Park Playground Lighting	84,000	84,000
102	Orange Terrace Park Community Center Floor Replacement	154,000	154,000
103	Reid Park Community Center Renovation	1,225,000	1,225,000
104	Swanson Park Small Playground Features	385,000	385,000
105	Andulka Park Drainage and Landscaping Improvements	200,000	200,000
106	Bobby Bonds Park Cesar Chavez Auditorium Acoustics & Sound System	154,000	154,000
107	Bobby Bonds Park Cesar Chavez Auditorium Stage Lighting	112,000	112,000
108	Don Lorenzi Park Fitness Equipment	203,000	203,000
109	Don Lorenzi Park Playgrounds	945,000	945,000
110	Fairmount Park Design and Construct New Visitor Center 2500 SF	742,000	742,000
111	Fairmount Park Court Parking Lot	385,000	385,000
112	Fairmount Park Historic Core Phase III	3,241,000	3,241,000
113	Fairmount Park Golf Course Pitch and Putt Course	1,400,000	1,400,000
114	Fairmount Park Lawn Bowling Building Replacement and Site Improvements	980,000	980,000
115	Fairmount Park Repair Run Off Catch Basin/Water Retention Area	455,000	455,000
116	Goeske Senior Center Improvements	42,000	42,000
117	Golden Star Park	20,000,000	20,000,000
118	Highland Park Community Center and Site Improvements	2,800,000	2,800,000
119	Highland Park Playground Improvements	385,000	385,000
120	Highland Park Walking Path & Area Lighting	420,000	420,000
121	Hole Lake Future Park Site Trail Head Improvements	1,225,000	1,225,000
122	Hunt Park Paint Interior Community Center	42,000	42,000
123	Hunt Park Partition Replacement	49,000	49,000
124	Hunter Park Improvements	112,000	112,000
125	Lincoln Park Fruit Tree Grove Garden Improvements	112,000	112,000
126	Lincoln Park Security Cameras	112,000	112,000
127	Martha McLean Park Replace Existing Restroom	882,000	882,000
128	Mission Ranch Park Design and Construction	18,760,000	18,760,000
129	Mount Vernon Future Park	5,845,000	5,845,000
130	Orange Terrace Park Partition	49,000	49,000
131	Reid Park Clubhouse Improvements	182,000	182,000
132	Reid Park Improvements	42,630,000	42,630,000
133	Ryan Bonaminio Park at Tequesquite Arroyo Splash Pad	798,000	798,000
134	Shamel Park Shamel Pool Building	1,761,200	1,761,200
135	Shamel Park Wading Pool Replacement	616,000	616,000
136	Villegas Park Master Plan Phase II Jogging Path	1,365,000	1,365,000
137	Villegas Park Master Plan Phase II Field Improvements	161,000	161,000
138	Citywide Action Skate Parks	8,680,000	8,680,000

SCHEDULE OF UNFUNDED CAPITAL PROJECTS

PRIORITY ORDER	PROJECTS BY CATEGORY	TOTAL ESTIMATED PROJECT COST	UNFUNDED AMOUNT
139	Fairmount Park Dexter Parking Lot & Lights	735,000	735,000
140	Fairmount Park Fairmount Park Banks Intersection/Pedestrian Access	525,000	525,000
141	Fairmount Park Historic Core Phase I	1,785,000	1,785,000
142	Fairmount Park Fairmount/Historic Core Phase II (Restroom Replacement)	1,050,000	1,050,000
143	Fairmount Park Izaak Walton Kitchen and Restroom Modernization	112,000	112,000
144	Fairmount Park Kitchen Upgrade at the Boathouse	98,000	98,000
145	Fairmount Park Market Street Frontage Improvement - Enhance Entry at Redwood	98,000	98,000
146	Fairmount Park Pedestrian Sidewalk	91,000	91,000
147	Fairmount Park Security Camera System	308,000	308,000
148	Goeske Senior Center Exercise Room Replacement	49,000	49,000
149	Hunt Park Paint Exterior Buildings	126,000	126,000
150	La Sierra Park Community Center Improvements	140,000	140,000
151	Martha McLean Park Riverside Gateway Improvements	13,300,000	13,300,000
152	Mount Rubidoux Park San Andreas Ave. Streetscape and Drainage Improvements	266,000	266,000
153	Mount Vernon Open Space Trail Improvements	2,450,000	2,450,000
154	Reid Park Clubhouse Kitchen Improvements	126,000	126,000
155	Ryan Bonaminio Park at Tequesquite Arroyo Signage	182,000	182,000
156	Swanson Park Improvements	147,000	147,000
157	Villegas Park Master Plan Phase II	126,000	126,000
158	Villegas Park Master Plan Phase II Synthetic Soccer Field Replacement	2,170,000	2,170,000
159	Reid Park Slurry Seal / Striping Parking Lot	385,000	385,000
160	Villegas Park Wading Pool	940,000	940,000
161	Mount Rubidoux Trail Landscape Improvements	300,000	164,040
162	Arlanza Community Garden Improvements	100,000	100,000
163	Challen Park Improvements	2,702,000	2,702,000
164	Fairmount Park Future Quarry Area Improvements	2,170,000	2,170,000
165	Fairmount Park Driving Range Improvements	70,000	70,000
166	Fairmount Park Market Street Frontage Improvement - New Decorative Fencing	147,000	147,000
167	Fairmount Park Riverside Gateway Improvements	74,000,000	74,000,000
168	Goeske Park Senior Center Senior Playground and Fitness Equipment	560,000	560,000
169	Goeske Senior Center Kitchen AC	70,000	70,000
170	Goeske Senior Center New Marquee & LED Motion Sign	126,000	126,000
171	La Sierra Park Picnic Shelter Fencing	126,000	126,000
172	Mountain View Park Camera System	49,000	49,000
173	North Park Stage	147,000	147,000
174	Orange Terrace Park Community Center Kitchen Upgrades	182,000	182,000
175	Tequesquite North - Riverside Gateway Improvements	51,250,000	51,250,000
176	Tequesquite South - Riverside Gateway Improvements	87,500,000	87,500,000
177	Villegas Park Master Plan Phase II Jogging Path	126,000	126,000
178	Riverwalk Dog Park Large Dog Park Renovation	406,000	406,000
179	Lincoln Park Security Lighting LED Upgrade	42,000	42,000
180	Shamel Park Slurry Seal / Striping	196,000	196,000

SCHEDULE OF UNFUNDED CAPITAL PROJECTS

PRIORITY ORDER	PROJECTS BY CATEGORY	TOTAL ESTIMATED PROJECT COST	UNFUNDED AMOUNT
181	Nichols Park Security Lighting LED Upgrade	42,000	42,000
182	Riverwalk Dog Park Lighting Upgrade	42,000	42,000
183	La Sierra Park Security Lighting Upgrade	42,000	42,000
184	Sycamore Canyon Wilderness Park Trailhead	1,500,000	1,456,000
185	Arlington Heights Sports Park	200,000	200,000
186	Arlington Park Challenge Course - Pro 4000 with 40-Yard Dash	595,000	595,000
187	Bordwell Park Challenge Course - Pro 4000 with 40-Yard Dash	525,000	525,000
188	Hunt Park Fencing	147,000	147,000
189	North Park Fence Along Parking Lot to Isolate Park	147,000	147,000
190	Riverwalk Dog Park Agility Course	189,000	189,000
191	Reid Park Facilities Painting	28,000	28,000
192	Reid Park Roof Coating / Repairs	28,000	28,000
193	Reid Park Gym Floor Refurbishment	28,000	28,000
194	Bobby Bonds HVAC Installation	63,000	63,000
195	Bordwell Park Facilities Painting	28,000	28,000
196	Bordwell Park Playground Roll Coat	42,000	42,000
197	Sycamore Highlands Playground Roll Coat	35,000	35,000
198	Nichols Park Roof Coating & Repairs	28,000	28,000
199	Nichols Park Gym Flooring Refurbishment	28,000	28,000
200	Nichols Park Sports Field Lighting	28,000	28,000
201	Don Derr Park Slurry Seal / Striping	126,000	126,000
202	Don Derr Park Sports Field Lighting	56,000	56,000
203	Hunt Park Gym Floor Refurbishment	28,000	28,000
204	Bryant Park Gym Floor Refurbishment	35,000	35,000
205	Bryant Park Facilities Painting	35,000	35,000
206	Bryant Park Switch Gear	49,000	49,000
207	Rutland Park Security Lighting Upgrade	42,000	42,000
208	La Sierra Park Roof Coating / Repairs	28,000	28,000
209	La Sierra Park Gym Floor Refurbishment	28,000	28,000
Total Parks, Recreation, and Community Services		**$ 676,078,225**	**$ 668,031,192**
PUBLIC PARKING			
1	Parking Garage #3 - Structural Maintenance	$ 300,000	$ 155,040
2	Parking Garage #6 - Structural Maintenance	420,000	420,000
3	Paint and Re-Brand Garages	2,100,000	2,100,000
4	On-Street Space Monitoring System	900,000	250,000
5	Parking Garage - Guidance, Lighting, Camera System	1,673,334	339,834
6	Downtown Parking Garage #3 - Feasibility Study	150,000	150,000
7	Downtown Parking Garage #8	40,000,000	39,900,000
8	Downtown Parking Garage #3 - Expansion	48,000,000	48,000,000
Total Public Parking		**$ 93,543,334**	**$ 91,314,874**

SCHEDULE OF UNFUNDED CAPITAL PROJECTS

PRIORITY ORDER	PROJECTS BY CATEGORY	TOTAL ESTIMATED PROJECT COST	UNFUNDED AMOUNT
RAILROAD-RELATED			
1	BNSF/Third Street Grade Separation	$ 105,000,000	$ 32,938,793
2	BNSF Quiet Zone - Mission Inn to Marlborough Ave	4,163,000	2,824,900
3	Phase II Grade Separation Program (Spruce, Jackson and/or Mary)	109,500,000	109,500,000
Total Railroad-Related		**$ 218,663,000**	**$ 145,263,693**
SEWER			
1	Water Quality Control Plant - Headworks Area Rehabilitation	$ 12,642,600	$ 9,346,815
2	Water Quality Control Plant - Headworks and Primary Odor Control Meters	850,000	850,000
3	Wastewater Lift Stations	2,000,000	1,465,371
4	Water Quality Control Plant - Plant II Sludge Pumps I & II Rehabilitation	2,625,700	1,775,700
5	Water Quality Control Plant - Activated Treatment Train Rehabilitation	5,989,200	5,439,200
6	Water Quality Control Plant - Switchgear Replacement	1,200,000	700,000
7	Water Quality Control Plant - SCADA Infrastructure Replacement	1,200,000	950,000
8	Sewer Main Replacement - Santa Ana River Trail	750,000	675,000
9	Sewer Pipe Replacement - Arlington Valley Channel	3,000,000	2,300,000
10	Sewer Pipe Replacement - Morris Street	2,000,000	1,800,000
11	Sewer Main Replacement - Kmart Lot	850,000	765,000
12	Sewer Pipe Replacement - Golden Avenue	600,000	540,000
13	Sewer Pipe Expansion - Greenpoint Avenue	227,000	227,000
14	Sewer Main Replacement - Rutland Avenue	400,000	360,000
15	Sewer Main Replacement - West Rutland Avenue	600,000	540,000
16	Water Quality Control Plant - DAFT Rehabilitation	8,860,000	8,860,000
17	Water Quality Control Plant - Security Upgrades Phase III	3,000,000	1,267,591
18	Water Quality Control Plant - 3D GIS Asset Management	850,000	750,000
19	Water Quality Control Plant - Wi-Fi Phase II	400,000	400,000
20	Water Quality Control Plant - Wi-Fi Phase III	1,620,000	1,400,000
21	Water Quality Control Plant - Warehouse Building Replacement	1,650,000	1,550,000
22	Water Quality Control Plant - Storage Sheds - Jurupa	2,000,000	1,997,603
Total Sewer		**$ 53,314,500**	**$ 43,959,280**
STORM DRAIN			
1	Citywide Storm Drain Repairs	$ 250,000	$ 250,000
2	14th Street Underpass Storm Drain	689,561	349,606
3	Cypress Ave Storm Drain Project	1,250,000	1,250,000
Total Storm Drain		**$ 2,189,561**	**$ 1,849,606**
TRANSPORTATION			
1	Adams Street/State Route 91 Interchange Improvements	$ 129,000,000	$ 122,100,000
2	Mitchell Avenue Sidepath Project	7,465,000	3,662,827
3	Five Points Intersection Improvements	7,416,000	5,391,000
4	Van Buren Widening, Indiana to South City Limit	26,640,352	26,640,352
5	Tyler/State Route 91 Interchange Improvements	75,000,000	75,000,000

SCHEDULE OF UNFUNDED CAPITAL PROJECTS

PRIORITY ORDER	PROJECTS BY CATEGORY	TOTAL ESTIMATED PROJECT COST	UNFUNDED AMOUNT
6	Canyon Crest Widening	8,104,673	5,307,410
7	Arlington Avenue at Chadbourne Avenue Traffic Signal	600,000	600,000
8	14th Street Widening, SR 91 to Martin Luther King	24,000,000	24,000,000
9	Traffic Signal Pole Replacement & Relocation	750,000	294,000
10	Citywide Striping Removal	70,000	70,000
11	Miscellaneous Signal Cabinet Replacement	225,000	225,000
12	Mission Inn Ave at Main St Ped Mall LED Light Strip	100,000	100,000
13	Van Buren at Victoria Signal Pole Replacement	100,000	100,000
14	Arlington Avenue Widening, Adams to Van Buren	1,500,000	1,500,000
15	Arlington Avenue Widening, Victoria to Alessandro	16,600,000	16,600,000
16	Chicago Medians - Le Conte to Martin Luther King	1,800,000	1,800,000
17	Eucalyptus Ave and Georgia St Widening Improvements	375,000	375,000
18	Irving St Widening Across from Hathorne Elementary	200,000	200,000
19	Cole Avenue at Krameria Avenue Traffic Signal	600,000	600,000
20	Pedestrian Mall Lighting Upgrade -10th St. to 5th St.	250,000	250,000
21	Traffic Signal Rewiring	80,000	80,000
22	Traffic Signal Equipment Update	65,000	65,000
23	Traffic Signal Replacement	250,000	250,000
24	Pergola Restoration Project at Various Locations	500,000	500,000
25	Median Fence and Pedestrian Crossing Safety Upgrades	5,664,100	5,664,100
26	Class II Buffered Bike Lanes	348,200	348,200
27	Signal Controller Upgrade	1,597,600	1,597,600
28	Victoria Avenue Beautification	2,783,000	2,008,000
29	Whittier Place Alley Fencing	300,000	195,000
Total Transportation		**$ 312,383,925**	**$ 295,523,489**
WATER			
1	Polyfluoroalkyl Substances Palmyrita Treatment Plant	$ 47,392,485	$ 43,670,451
2	Polyfluoroalkyl Substances JW North Treatment Plant	55,200,000	55,200,000
3	Polyfluoroalkyl Substances Palm Meadows Treatment Plant	15,000,000	15,000,000
4	Additional Well Rehabilitations	3,000,000	3,000,000
5	Reservoir Retrofits/Replacements	12,900,000	12,900,000
6	Transmission Main Replacements	11,800,000	11,800,000
7	Main Replacements	56,003,396	56,003,396
8	Distribution Facilities Replacement	11,500,000	11,500,000
9	Safety Improvements	5,500,000	5,500,000
10	System Expansion	1,000,000	1,000,000
11	Paving Expansion	1,000,000	1,000,000
Total Water		**$ 220,295,881**	**$ 216,573,847**
TOTAL UNFUNDED NEEDS		**$ 2,011,849,366**	**$ 1,880,098,034**

APPENDIX B: CAPITAL FISCAL POLICIES

City of Riverside
MULTI-YEAR CAPITAL PLANNING FISCAL POLICY
Approved by the City Council on March 20, 2018

PURPOSE:

A Capital Plan (Capital Improvement Program) is a multi-year financial plan that lists and describes capital projects a local government plans to undertake, indicates how projects will be funded and projects the effect of the plan on key financial variables.

A Capital Project results in the acquisition or increased value of a capital asset (e.g. land, land improvements, infrastructure and equipment, etc.).

The Government Finance Officers Association (GFOA) recommends that state and local governments prepare and adopt comprehensive, fiscally sustainable, multi-year capital plans. A multi-year capital plan is intended to identify and prioritize expected capital needs based on strategic priorities and operational needs, establish project scope and cost, detail estimated amounts of funding from various sources, and project future operating and maintenance costs.

POLICY:

The City shall adopt a multi-year Capital Plan spanning at least five years in conjunction with the biennial budget and five-year financial planning processes. The Capital Plan should include all of the City's planned capital projects. To qualify as a capital project, the asset or improvement should have: 1) monetary value (cost) of at least $20,000; and 2) useful life of at least 10 years.

The Capital Plan should incorporate the following elements as relevant and appropriate:

a. Assessment of the physical condition of existing capital assets;

b. Economic development projections, strategic plans, comprehensive plans, facility master plans and regional plans, including changes in federal, state, and county policy and regulations;

c. Prioritization of capital needs based on established policy; and

d. Financial strategies and sources of funding: 1) for the acquisition or improvements associated with the project, and 2) for the subsequent annual operation and maintenance costs of the capital asset throughout its life.

City of Riverside
PRIORITIZATION OF CAPITAL IMPROVEMENT PROJECTS FISCAL POLICY

Approved by the City Council on March 20, 2018

PURPOSE:

The Government Finance Officers Association (GFOA) recommends that state and local governments establish an objective process for prioritizing capital improvement projects, to give decision-makers a basis for choosing the most compelling projects for funding and implementation.

POLICY:

The City shall adopt an objective process of prioritizing capital improvement projects to ensure consistency with the General Plan, and in conjunction with the biennial budget process or otherwise as capital funding becomes available, using the following factors:

1. Risk to Health, Safety and Environment:

    a. Avoids or minimizes the risk to health, safety and environment associated with the infrastructure based on condition assessment of the asset, or the lack of an asset, that may include the age, size, material, capacity, and history of failure of the infrastructure; and

    b. Urgency of the project to reduce the potential hazards to the public, property and environment.

2. Regulatory or Mandated Requirements:

    a. By legal mandate or consent decree;

    b. By other regulatory requirements (project specific or programmatic), and

    c. Must comply with court orders and settlements or avoids plausible legal claims.

3. Asset Condition, Annual Recurring Costs and Asset Longevity:

    a. Existing conditions and capacity to meet the basic level of service is deficient;

    b. Avoids potential failure due to substandard conditions;

    c. Improves the overall reliability of the capital asset and infrastructure system;

    d. Major implications of delaying the project such as significant future costs, or negative community impacts;

    e. Extent to which reduces City operations and maintenance expenditures; and

    f. Increases the longevity of the capital asset or extends the useful life of the asset in the long term.

4. Community Investment and Economic Prosperity:

    a. Contributes toward economic development and revitalization efforts;

    b. Reduces or avoids impacts to the community when infrastructure fails;

    c. Benefits under-served communities including those with low income households, low community engagement and low mobility or access to transportation systems; and

    d. Located in a census tract that is deemed eligible for Community Development Block Grant (CDBG) funds.

5. Level and Quality of Service:

    a. Improves existing conditions and capacity to meet the minimum level and quality of services that is deficient;

    b. Addresses an infrastructure or facility deficit identified in a community plan; and

    c. Addresses the need to install new facilities or improve existing facilities to provide access to City services

6. Sustainability and Conservation:

    Improves the health of the community and natural environment through sustainable designs with improved regional air quality and reduced greenhouse gas emission that contributes to climate change.

7. Funding Availability:

    Rank is increased based on assessment of the amount of funding needed to complete the current project phase and the entire project.

8. Project Readiness:

    a. Ready to enter the phase corresponding to the funding proposed;

    b. Delivered most expeditiously shall be preferred; and

    c. Complex environmental issues or known significant legal challenges shall be scored lower than projects without said complications.

9. Multiple Category Benefit and Bundling Opportunities:

    a. Fulfills the prioritization factors described above across multiple scoring categories;

    b. Reduces construction costs by potentially bundling with adjacent projects; and

    c. Provides for partnering or bundling opportunities with other local, state, or federal agencies (e.g. leverages shared resources).

Implementation of this Policy is not intended to release or alter the City's current or future obligations to complete specific capital improvement projects by specified deadlines, as may be imposed by court order, or order of any federal, state or local regulatory agency.

APPENDIX C: PLANNING COMMISSION ACTION ITEMS

CITY OF RIVERSIDE

Planning Commission Memorandum

Community & Economic Development Department **Planning Division**
3900 Main Street, Riverside, CA 92522 | Phone: (951) 826-5371 | **RiversideCA.gov**

PLANNING COMMISSION HEARING DATE: MAY 7, 2026
AGENDA ITEM NO.:4

PROPOSED PROJECT

Case Number	PC-2026-00366 (General Plan Consistency)
Request	Review of the City of Riverside's Capital Improvement Program (CIP) for fiscal year (FY) 2026/27 and 2027/28 for consistency with General Plan 2025.
Applicant	City of Riverside Finance Department
Project Location	Citywide
Wards	Citywide
Staff Planner	Clarissa Manges, Assistant Planner 951-826-5264; cmanges@riversideca.gov

RECOMMENDATIONS

Staff recommends that the Planning Commission:

1. **DETERMINE** that the City of Riverside's Capital Improvement Program for FY 2026/27 and 2027/28 is not subject to the California Environmental Quality Act (CEQA) review pursuant to CEQA Guidelines Section 15061(b)(3) as this action is not considered a "project" as defined by Section 15378(b)(4), and a determination of consistency has no potential to result in a direct or indirect physical change in the environment;
2. **FIND** that the capital improvement projects added for FY 2026/27 and 2027/28 are consistent with the City's General Plan 2025; and
3. **REPORT to the City Council** that the capital improvement projects added for FY 2026/27 and 2027/28 are consistent with the City's General Plan 2025.

BACKGROUND

California Government Code Section 65401 requires that the Planning Commission review the City's Capital Improvement Program (CIP) for the upcoming fiscal year to evaluate conformity with the General Plan and report its findings to the City Council. The City of Riverside Charter and the Riverside Municipal Code also require that the Planning Commission review the City's proposed CIP and report its findings to the City Council. It is anticipated that City Council will consider the FY 2026/27 and 2027/28 budget and CIP in June 2026.

The Planning Commission's determination of General Plan consistency is not an approval or endorsement of the projects. Individual projects will undergo further planning, design and review prior to approval or implementation. The City Council has final discretion in approving, modifying or removing projects from the CIP.

The Planning Commission last reviewed the CIP project list for FY 2025/26 on May 8, 2025, and reported to the City Council that the projects were consistent with the General Plan.

PROPOSAL

Staff is requesting that the Planning Commission review the CIP projects added for FY 2026/27 and 2027/28 and determine that the new projects are consistent with the City's General Plan 2025 (General Plan).

The CIP project list for FY 2026/27 and 2027/28 includes 33 projects not previously reviewed by the Planning Commission for General Plan consistency and 80 projects previously reviewed that are ongoing (Exhibit 1).

PROJECT ANALYSIS

The CIP is updated every fiscal year with some projects carrying over to the next budget period, some projects modified, and some added. The Planning Commission is responsible for reviewing only those CIP projects that have been added or modified.

Exhibit 1 includes a list of all capital improvement projects anticipated for FY 2026/27 and 2027/28 and identifies:

1) Projects previously reviewed by the Planning Commission; and
2) New projects requiring a determination of consistency (detailed project descriptions are included in Exhibit 2).

Staff reviewed the 33 new projects by category to assess consistency with the General Plan and recommend finding that the new projects are consistent with the Objectives and Policies of the General Plan as detailed further below.

OVERARCHING OBJECTIVES AND POLICIES

Land Use

Policy LU-10.2: Review the Capital Improvement Program of the City and local public works projects of other local agencies within the corporate boundaries of Riverside annually for consistency with this General Plan, pursuant to Government Code Sections 65401 et. seq. and Municipal Code Title 19, 19.050.030 (B).

Policy LU-10.3: Time the provision of capital improvements to ensure that all necessary public services and facilities for an area planned for new urban development are in place when development in the area occurs.

The FY 2026/27 and 2027/28 Reference Numbers of each project in Exhibit 2 are identified for each of the specific General Plan Objectives and Policies, organized by Element, with which they are consistent as summarized below.

AIRPORT – PROJECTS 1, 2, 3, AND 4

- **Project 1 – AIRPORT PAVEMENT MANAGEMENT STUDY**
- **Project 2 – AIRPORT RUNWAY SAFETY AREA EROSION DESIGN**
- **Project 3 – AIRPORT TURF REPLACEMENT**
- **Project 4 – AIRPORT MASTER PLAN**

Circulation and Community Mobility

Policy CCM-11.3: Ensure that Riverside Municipal Airport continues to serve general aviation needs.

Land Use
Objective LU-22: Avoid land use/transportation decisions that would adversely impact the long-term viability of the March Air Reserve Base/March Inland Port, Riverside Municipal and Flabob Airports.
Objective LU-23: Enhance and ensure the long-term viability of Riverside Municipal Airport by developing facilities that efficiently serve present and anticipated future needs and encouraging increased business and corporate usage.

Public Safety
Policy PSE-1-Natural Hazards: Reduce the risk to the community from hazards related to geologic conditions, seismic activity, flooding, drought, and structural and wildland fires.
Policy PSE-3-Transportation: Minimize the risk of potential hazards associated with air and ground transportation.

MUNICIPAL BUILDINGS AND FACILITIES – PROJECTS 37, 39, AND 40

- **Project 37 – CITY HALL BASEMENT FLOOD DAMAGES**
- **Project 38 – CITY HALL ELEVATOR MODERNIZATION**
- **Project 39 – CITY HALL LOBBY RENOVATION**

Open Space and Conservation
Policy OS-9.1: Encourage the most energy-efficient design for local government facilities and equipment consistent with reasonable rate of return and the recognition of the environmental benefits from energy conservation.

Public Facilities
Objective PF-10: Meet the varied recreational and service needs of Riverside's diverse population.

Public Safety
Policy PSE-1: Reduce the risk to the community from hazards related to geologic conditions, seismic activity, flooding, drought, and structural and wildland fires

PARKS, RECREATION, AND COMMUNITY SERVICES – PROJECTS 42, 43, 44, 45, 46 AND 47

- **Project 42 – FAIRMOUNT PARK ARMORY CONVERSION**
- **Project 43 – FAIRMOUNT PARK MASTER PLAN**
- **Project 44 – FAIRMOUNT PARK LAKE DREDGING**
- **Project 45 – HOLE LAKE MASTER PLAN**
- **Project 46 – ORANGE TERRACE PARK LOWER PLAYGROUND AND SHADE STRUCTURE**
- **Project 47 – SPECIAL TRANSPORTATION ZERO EMISSION INFRASTRUCTURE**

Air Quality
Policy AQ-2.18: Manage the City's transportation fleet fueling standards to achieve the best alternative fuel fleet mix possible.
Policy AQ-5.3: Continue and expand use of renewable energy resources such as wind, solar, water, landfill gas, and geothermal sources.

Arts & Culture
Objective AC-5: Comprehensively promote and market Riverside's arts and cultural attractions.

Circulation & Community Mobility
Policy CCM-EJ-1.0 Active Transportation: Promote physical activity and active transportation to address negative health outcomes, particularly among environmental justice communities.

Historic Preservation
Policy HP-1.2: The City shall assume its direct responsibility for historic preservation by protecting and maintaining it's publicly owned cultural resources. Such resources may include, but are not limited to, buildings, monuments, landscapes, and right-of-way improvements, such as retaining walls, granite curbs, entry monuments, light standards, street trees, and the scoring, dimensions, and patterns of sidewalks, driveways, curbs and gutters.
Policy HP-6.2: The City shall use financial resources from state, federal and private programs that assist in the identification, designation and preservation of cultural resources.

Land Use and Urban Design
Objective LU-1: Increase the prominence of the Santa Ana River by providing better connections and increased recreational opportunities.
Objective LU-21: Attractively develop the City's major gateways to create a stronger sense of City identity.
Policy LU-28.2: Encourage the rehabilitation or replacement of dilapidated housing units and buildings, discouraging further deterioration. Where necessary, seek to remove unsafe structures.
Policy LU-48.3: Create a sense of arrival at key Downtown gateways, reinforcing the City's natural, cultural and historic characteristics.
Policy LU-75.4: Encourage the timely development of planned parks, schools and libraries.

Open Space and Conservation
Objective OS-7: Turn the Santa Ana River Task Force "Vision" into reality.
Policy OS-7.1: Focus river improvements on the following areas: Fairmount Park and Mt. Rubidoux, Tequesquite Avenue and the Old Landfill, Martha McLean Park, Van Buren Bridge and the Hidden Valley Wildlife Area.
Policy OS-7.7: Explore implementation of the Santa Ana River Task Force's ideas for the five focus areas, such as:

1) Work with private interests to develop a restaurant or coffee bar in Fairmount Park near the river with views of the open water impoundment.
2) Establish trail linkages between Mt. Rubidoux and Fairmount Park and generally improve trails in and around the area.
3) Explore the development of water treatment wetlands that can be used for bird watching and improving water quality inputs adjacent to the river course.
4) Recapture the former glory of Fairmount Park as a recreational area. Provide picnic areas, bathrooms and other attractions such as pony rides and carousels.
5) Improve linkages to other parts of the City via an improved walking/biking trail along Market Street and/or Mission Inn Avenue. Improve signage to direct visitors from other parks and other parts of the City to the parkway.

Policy OS-8.1: Support the development and use of non-polluting, renewable energy sources.
Objective OS-9: Encourage the efficient use of energy resources by the City of Riverside.
Policy OS-9.1: Encourage the most energy-efficient design for local government facilities and equipment consistent with reasonable rate of return and the recognition of the environmental benefits from energy conservation.

Objective OS-10: Preserve the quantity and quality of all water resources throughout Riverside.

Park and Recreation
Objective PR-1: Provide a diverse range of park and recreational facilities that are responsive to the needs of Riverside residents.
Policy PR-EJ-1.0 Parks and Recreation: Distribute recreational facilities equitably throughout Riverside's neighborhoods.
Objective PR-2: Increase access to existing and future parks and expand pedestrian linkages between park and recreational facilities throughout Riverside.
Objective PR-3: Engage Riverside residents and the business community in planning for recreation and service needs.
Policy PR-3.1: Consider the needs of all age groups, abilities, disabilities and special interest groups in park and recreation planning and design.

Public Facilities
Objective PF-10: Meet the varied recreational and service needs of Riverside's diverse population.

Public Safety
Policy PSE-1: Reduce the risk to the community from hazards related to geologic conditions, seismic activity, flooding, drought, and structural and wildland fires

PUBLIC PARKING – PROJECT 51

- **Project 51 – REPLACE IPS PAY STATIONS**

Circulation & Community Mobility Element
Objective CCM-13: Ensure that adequate on- and off-street parking is provided throughout Riverside.

Public Facilities
Objective PF-10: Meet the varied recreational and service needs of Riverside's diverse population.

RAILROAD – PROJECT 54

- **Project 54 – THIRD STREET BUILDING DEMO**

Air Quality
Policy AQ-4.2: Reduce particulate matter from agriculture (e.g., require use of clean non-diesel equipment and particulate traps), construction, demolition, debris hauling, street cleaning, utility maintenance, railroad rights-of-way and off-road vehicles to the extent possible, as provided in SCAQMD Rule 403.

Circulation & Community Mobility
Policy CCM-12.3: Aggressively pursue grade-separated rail crossings to alleviate traffic congestion and associated air quality and noise impacts.

Public Safety
Policy PSE-2 – Hazardous Materials: Minimize the risk of potential hazards associated with management and transport of hazardous materials.

SEWER – PROJECT 66, 67, 68, 69, AND 70

- **Project 66 – WATER QUALITY CONTROL PLANT-GAS LINE REPAIR**

- **Project 67 – THIRD STREET SEWER IMPROVEMENT**
- **Project 68 – WATER QUALITY CONTROL PLANT-BUTTERFLY VALVE REPLACEMENT**
- **Project 69 – WATER QUALITY CONTROL PLANT-SOLAR SHADE STRUCTURES**
- **Project 70 – WATER QUALITY CONTROL PLANT-STORAGE SHEDS-JURUPA**

Air Quality
Policy AQ-5.3: Continue and expand use of renewable energy resources such as wind, solar, water, landfill gas, and geothermal sources.
Policy AQ-5.4: Continue and expand the creation of locally-based solar photovoltaic power stations in Riverside.

Open Space and Conservation
Policy OS-8.1: Support the development and use of non-polluting, renewable energy sources.
Objective OS-9: Encourage the efficient use of energy resources by the City of Riverside.
Policy OS-9.1: Encourage the most energy-efficient design for local government facilities and equipment consistent with reasonable rate of return and the recognition of the environmental benefits from energy conservation.
Objective OS-10: Preserve the quantity and quality of all water resources throughout Riverside.

Public Facilities
Objective PF-3: Maintain sufficient levels of wastewater service throughout the community.
Policy PF-3.3: Pursue improvements and upgrades to the City's wastewater collection facilities consistent with current master plans and the City's Capital Improvement Program.

STORM DRAIN – PROJECTS 72, 73, 74, 75, 76, AND 77

- **Project 72 – FOURTEENTH STREET UNDERPASS PUMP STATION PROJECT**
- **Project 73 – HOUGHTON AVENUE STORM DRAIN IMPROVEMENTS**
- **Project 74 – LINCOLN STREET STORM DRAIN**
- **Project 75 – FAIRMOUNT PARK STORM DRAIN**
- **Project 76 – THIRTEENTH STREET STORM DRAIN**
- **Project 77 – ARLINGTON AVE STORM DRAIN**

Public Facilities
Policy PF-3.4: Continue to investigate and carry out cost-effective methods for reducing stormwater flows into the wastewater system and the Santa Ana River.
Objective PF-4: Provide sufficient levels of storm drainage service to protect the community from flood hazards and minimize the discharge of materials into the storm drain system that are toxic, or which would obstruct flows.
Policy PF-4.1: Continue to fund and undertake storm drain improvement projects as identified in the City of Riverside Capital Improvement Plan.
Policy PF-4.3: Continue to routinely monitor and evaluate the effectiveness of the storm drain system and make adjustments as needed.

Public Safety
Policy PSE-1 – Natural Hazards: Reduce the risk to the community from hazards related to geologic conditions, seismic activity, flooding, drought, and structural and wildland fires.
Policy PSE-3 – Transportation: Minimize the risk of potential hazards associated with air and ground transportation.

TRANSPORTATION – PROJECTS 78, 79, 80, 105, 106, 107, 108, AND 109

- **Project 78 – RIVERSIDE NEIGHBORHOOD SAFETY**
- **Project 79 – MARKETPLACE PED/BIKE BRIDGE MASTER PLAN**
- **Project 80 – CITYWIDE INTELLIGENT TRANSPORTATION SYSTEM MASTER PLAN**
- **Project 105 – MONTICELLO LANDSCAPE MAINTENANCE & FENCE**
- **Project 106 – PARKING STRING LIGHTING**
- **Project 107 – WHITTIER PLACE ALLEY FENCING**
- **Project 108 – VAN BUREN CLASS II BIKE LANES**
- **Project 109 – CHICAGO BIKE LANES & SIDEWALKS**

Air Quality

Policy AQ-1.20: Create the maximum possible opportunities for bicycles as an alternative work transportation mode.
Objective AQ-2: Reduce air pollution by reducing emissions from mobile sources.
Policy AQ-2.15: Manage traffic flow through signal synchronization, while coordinating with and permitting the free flow of mass transit vehicles, as a way to achieve mobility.
Policy AQ-2.22: Monitor traffic and congestion to determine when and where the City needs new transportation facilities to achieve increased mobility efficiency.

Circulation and Community Mobility

Policy CCM-EJ-1.0 – Active Transportation: Promote physical activity and active transportation to address negative health outcomes, particularly among environmental justice communities.
Objective CCM-2: Build and maintain a transportation system that combines a mix of transportation modes and transportation system management techniques, and that is designed to meet the needs of Riverside's residents and businesses, while minimizing the transportation system's impacts on air quality, the environment and adjacent development.
Policy CCM-2.8: Design street improvements considering the effect on aesthetic character and livability of residential neighborhoods, along with traffic engineering criteria.
Policy CCM-2.9: Design all street improvement projects in a comprehensive fashion to include consideration of street trees, pedestrian walkways, bicycle lanes, equestrian pathways, signing, lighting, noise and air quality wherever any of these factors are applicable.
Policy CCM-9.9: Improve and enhance pedestrian connections between Downtown Riverside and the Downtown Metrolink station through use of walkways and the City's Green Line Trolley service.
Objective CCM-10: Provide an extensive and regionally linked public bicycle, pedestrian and equestrian trails system.
Policy CCM-10.3: Provide properly designed pedestrian facilities for the disabled and senior population to ensure their safety and enhanced mobility as users of streets, roads and highways emphasizing "complete streets" principles.
Policy CCM-10.4: Identify and seek to eliminate hazards to safe, efficient bicycle or pedestrian movement citywide.
Policy CCM-10.5: Promote the health benefits of using a bicycle or walking as a means of transportation.
Policy CCM-10.6: Encourage pedestrian travel through the creation of sidewalks and street crossings.

Policy CCM-10.10: Evaluate the needs of bicycle traffic in the planning, design, construction and operation of all roadway projects funded by the City.
Policy CCM-10.12: Encourage bicycling as a commute mode to school, work, etc.

Education
Policy ED-4.6: Work towards providing a bicycle network within Riverside that connects schools, employment centers and residential areas.

Open Space and Conservation
Policy OS-8.10: Support the use of public transportation, bicycling and other alternative transportation modes in order to reduce the consumption of non-renewable energy supplies.

Public Safety
Policy PSE-3 – Transportation: Minimize the risk of potential hazards associated with air and ground transportation.

ENVIRONMENTAL REVIEW

This proposal is not subject to the California Environmental Quality Act (CEQA) review under CEQA Guidelines Section 15061(b)(3) because the consistency review is not a "project", per 15378(b)(4), and because a determination of consistency has no potential to result in a direct or indirect physical change in the environment.

APPEAL INFORMATION

Actions by the City Planning Commission, including any environmental finding, may be appealed to the City Council within ten calendar days after the decision. Appeal filing and processing information may be obtained from the Planning Division, 3rd Floor, City Hall.

EXHIBITS LIST

1. CIP Project Summary List for FY 2026/27 and 2027/28
2. CIP New Project Descriptions

Prepared by: Clarissa Manges, Assistant Planner
Reviewed by: Veronica Hernandez, Senior Planner; and Matthew Taylor, Principal Planner
Approved by: Edgardo Caldera, Acting City Planner
Concurs with: Edward Enriquez, Assistant City Manager/CFO, Treasurer

PC-2026-00366

Planning Commission
May 7, 2026

Capital Improvement Program Planned Projects Summary Fiscal Year 2026/27 and 2027/28		
Ref #	**Funded Projects by Category**	**Reviewed by Planning Commission? (Yes/No)**
	Airport	
1	AIRPORT PAVEMENT MANAGEMENT STUDY	No
2	AIRPORT RUNWAY SAFETY AREA EROSION DESIGN	No
3	AIRPORT TURF REPLACEMENT	No
4	AIRPORT MASTER PLAN	No
	Electric	
5	DISTRIBUTION LINE EXTENSIONS	Yes
6	LINE REBUILDS	Yes
7	STREET LIGHTING	Yes
8	SYSTEM SUBSTATION MODIFICATIONS	Yes
9	TRANSFORMERS	Yes
10	METERS	Yes
11	SERVICES	Yes
12	SUBSTATION BUS & UPGRADES	Yes
13	MAJOR OVERHEAD / UNDERGROUND CONVERSIONS	Yes
14	MAJOR TRANSMISSION LINE PROJECTS	Yes
15	GENERAL ORDER 165 UPGRADES/LINE REBUILDS/RELOCATION - OVERHEAD	Yes
16	GENERAL ORDER 165 UPGRADES/LINE REBUILDS/RELOCATION - UNDERGROUND	Yes
17	GENERATING STATION	Yes
18	SUBSTATION TRANSFORMER ADDITION	Yes
19	MAJOR FEEDERS	Yes
20	SOUTHERN CALIFORNIA EDISON (SCE) CONDEMNATION COSTS	Yes
21	CABLE REPLACEMENT	Yes

22	MAJOR STREETLIGHT PROJECTS	Yes
23	NEIGHBORHOOD STREETLIGHT RETROFIT	Yes
24	MAJOR 4-12 KV CONVERSION	Yes
25	DISTRIBUTION AUTOMATION	Yes
26	CITYWIDE COMMUNICATIONS	Yes
27	SUPERVISORY CONTROL AND DATA ACQUISITION (SCADA)	Yes
28	CUSTOMER INFORMATION SYSTEM (CIS) UPGRADE	Yes
29	ADVANCED METERING INFRASTRUCTURE	Yes
30	OPERATIONAL TECHNOLOGY GOVERNANCE	Yes
31	WORK, ASSET, & INVENTORY MANAGEMENT SYSTEMS	Yes
32	NETWORK COMMUNICATION SYSTEM	Yes
33	LAND MOBILE RADIO	Yes
34	OUTAGE MANAGEMENT SYSTEM	Yes
35	ADVANCED DISTRIBUTION MANAGEMENT SYSTEM	Yes
36	MOBILE APPLICATIONS	Yes
	Municipal Buildings and Facilities	
37	CITY HALL BASEMENT FLOOD DAMAGES	No
38	CITY BUILDINGS DEFERRED MAINTENANCE	Yes
39	CITY HALL ELEVATOR MODERNIZATION	No
40	CITY HALL LOBBY RENOVATION	No
	Parks, Recreation and Community Services	
41	PARKS DEFERRED MAINTENANCE	Yes
42	FAIRMOUNT PARK ARMORY CONVERSION	No
43	FAIRMOUNT PARK MASTER PLAN	No
44	FAIRMOUNT PARK LAKE DREDGING	No
45	HOLE LAKE MASTER PLAN	No
46	ORANGE TERRACE PARK LOWER PLAYGROUND AND SHADE STRUCTURE	No
47	SPECIAL TRANSPORTATION ZERO EMISSION INFRASTRUCTURE	No
	Public Parking	
48	UNINTERRUPTED POWER SUPPLY BACKUP SYSTEM	Yes

PC-2026-00366 Planning Commission
May 7, 2026

49	ON-STREET SPACE MONITORING SYSTEM	Yes
50	PARKING GARAGE #7 - STRUCTURAL MAINTENANCE	Yes
51	REPLACE IPS PAY STATIONS	No
52	PARKING GARAGE - GUIDANCE, LIGHTING, CAMERA SYSTEM	Yes
	Railroad	
53	BNSF QUIET ZONE - MISSION INN TO MARLBOROUGH AVE	Yes
54	THIRD STREET BUILDING DEMO	No
55	BNSF/THIRD STREET GRADE SEPARATION	Yes
	Sewer	
56	FAIRGROUNDS WASTEWATER	Yes
57	DEXTER WASTEWATER	Yes
58	WATER QUALITY CONTROL PLANT – MASTER PLAN UPDATE	Yes
59	PIERCE PUMP STREET STATION REHABILITATION	Yes
60	WESTERN, MARTIN LUTHER KING, & GARDEN HILL LIFT STATION REHABILITATION	Yes
61	SEWER PIPE REPLACEMENT – ARLINGTON VALLEY CHANNEL	Yes
62	PRIORITY PIPELINE ASSESSMENT & REPAIR	Yes
63	WATER QUALITY CONTROL PLANT – URGRADE FLOW METERS TO ELECTROMAGNETIC METERS	Yes
64	WATER QUALITY CONTROL PLANT - PLANT II SLUDGE PUMPS I & II REHABILITATION	Yes
65	WATER QUALITY CONTROL PLANT - SECURITY UPGRADES PHASE III	Yes
66	WATER QUALITY CONTROL PLANT - GAS LINE REPAIR	No
67	THIRD STREET SEWER IMPROVEMENT	No
68	WATER QUALITY CONTROL PLANT - BUTTERFLY VALVE REPLACEMENT	No
69	WATER QUALITY CONTROL PLANT - SOLAR SHADE STRUCTURES	No
70	WATER QUALITY CONTROL PLANT - STORAGE SHEDS - JURUPA	No
	Storm Drain	
71	MISCELLANEOUS STORM DRAIN CONSTRUCTION	Yes
72	FOURTEENTH STREET UNDERPASS PUMP STATION PROJECT	No
73	HOUGHTON AVENUE STORM DRAIN IMPROVEMENTS	No
74	LINCOLN STREET STORM DRAIN	No
75	FAIRMOUNT PARK STORM DRAIN	No
76	THIRTEENTH STREET STORM DRAIN	No

77	ARLINGTON AVE STORM DRAIN	No
	Transportation	
78	RIVERSIDE NEIGHBORHOOD SAFETY	No
79	MARKETPLACE PED/BIKE BRIDGE MASTER PLAN	No
80	CITYWIDE INTELLIGENT TRANSPORTATION SYSTEM MASTER PLAN	No
81	MISCELLANEOUS STREET CONSTRUCTION	Yes
82	CONTROLLER ASSEMBLY REPLACEMENT	Yes
83	MISCELLANEOUS SIGNAL REVISIONS	Yes
84	ARTERIAL INTERCONNECT MAINTENANCE & REPLACEMENT	Yes
85	TRAFFIC MANAGEMENT CENTER	Yes
86	NEW TRAFFIC SIGNAL INSTALLATIONS	Yes
87	LED SIGNAL LENS REPLACEMENTS	Yes
88	MISSION BOULEVARD BRIDGE REPLACEMENT AT SANTA ANA RIVER	Yes
89	MARKET STREET BRIDGE REPLACEMENT OVER THE SANTA ANA RIVER	Yes
90	MISCELLANEOUS TRAFFIC PROJECTS	Yes
91	MAJOR STREETS REHABILITATION	Yes
92	CURB & GUTTER REPAIRS	Yes
93	MINOR STREET REHABILITATION	Yes
94	SIDEWALK/TRAIL CONSTRUCTION	Yes
95	SIDEWALK REPAIR PROGRAM	Yes
96	PEDESTRIAN RAMPS	Yes
97	CDBG STREET IMPROVEMENTS - MATCHING FUNDS	Yes
98	MINOR STREET PRESERVATION	Yes
99	MISCELLANEOUS BRIDGE REPAIR	Yes
100	PAVEMENT REHABILITATION & IMPROVEMENTS	Yes
101	TRAFFIC SIGNAL PREEMPTION DEVICE REPLACEMENT	Yes
102	RMRA REHABILITATION & TRAFFIC IMPROVEMENTS	Yes
103	TRAFFIC DETECTION REPLACEMENT PROGRAM	Yes
104	TRAFFIC SIGNAL COMMUNICATION EQUIPMENT	Yes
105	MONTICELLO LANDSCAPE MAINTENANCE & FENCE	No
106	PARKING STRING LIGHTING	No
107	WHITTIER PLACE ALLEY FENCING	No

PC-2026-00366 Planning Commission
May 7, 2026

108	VAN BUREN CLASS II BIKE LANES	No
109	CHICAGO BIKE LANES & SIDEWALKS	No
	Water	
110	DISTRIBUTION AUTOMATION/RELIABILITY	Yes
111	SYSTEM EXPANSION	Yes
112	METERS	Yes
113	WATER STOCK	Yes
114	DISTRIBUTION SYSTEM FACILITIES REPLACEMENTS	Yes
115	MAIN REPLACEMENTS PROGRAM	Yes
116	TRANSMISSION MAINS	Yes
117	PUMP STATION REPLACEMENTS	Yes
118	FACILITY REHABILITATION PROGRAM	Yes
119	RECYCLED WATER FACILITIES - RIVERSIDE HABITAT PARKS AND WATER PROJECT	Yes
120	SEVEN OAKS DAM CONSERVATION - ENHANCED RECHARGE	Yes
121	OPERATIONAL TECHNOLOGY GOVERNANCE	Yes
122	DIGITAL MODERNIZATION UPGRADE	Yes
123	SCADA UPGRADE & SYSTEM AUTOMATION	Yes
124	POTABLE/IRRIGATION WELL REPLACEMENTS	Yes

APPENDIX D: LIST OF ACRONYMS

Acronym	Definition
ADA	Americans with Disabilities Act
ADMS	Advanced Distribution Management System
AMI	Advanced Metering Infrastructure
ARPA	American Rescue Plan Act
ATP	Active Transportation Program
AUSD	Alvord Unified School District
BEC	Budget Engagement Commission
BNSF	Burlington Northern Santa Fe
CARES	Coronavirus Aid, Relief, and Economic Security (Act)
CDBG	Community Development Block Grant
CEQA	California Environmental Quality Act
CIP	Capital Improvement Program
CIS	Customer Information System
CMAQ	Congestion Mitigation Air Quality
CNG	Compressed Natural Gas
CPCN	Certificate of Public Convenience and Necessity
CPI	Consumer Price Index
CPUC	California Public Utilities Commission
DAFT	Dissolved Air Flotation Thickeners
DIF	Development Impact Fees
EIR	Environmental Impact Report
FAA	Federal Aviation Administration
FDMA	Frequency Division Multiple Access
FEMA	Federal Emergency Management Agency
FLISR	Fault Location, Isolation, and Restoration
FRA	Federal Railroad Administration
GAAP	Generally Accepted Accounting Principles
GIS	Geographic Information System
GUI	Graphical User Interfaces
HAWK	High-intensity Activated Crosswalk
HSIP	Highway Safety Improvement Program
HUTA	Highway Users Tax Account
HVAC	Heating, Ventilation, & Air Conditioning
IT	Innovation & Technology Department
LED	Light Emitting Diode
LMR	Land Mobile Radio
LSRP	Local Roadway Safety Plan
LPI	Leading Pedestrian Interval
MBR	Membrane Bio-Reactor
MDP	Master Drainage Plan
MGD	Million Gallons per Day
MOU	Memorandum of Understanding

Acronym	Definition
NEPA	National Environmental Policy Act
NMDP	Northside Master Drainage Plan
NPDES	National Pollutant Discharge Elimination System
NSP	Northside Specific Plan
ODMS	Operational Data Management System
OMS	Outage Management System
OTS	Office of Traffic Safety
P3	Public-Private-Partnership
PARCS	Parking Access and Revenue Control System
PEIR	Program Environmental Impact Report
PESP	Parking Ecosystem Sustainability Plan
PLC	Programmable Logic Controllers
RAM	Riverside Art Museum
RCRCD	Riverside-Corona Resource Conservation District
RCTC	Riverside County Transportation Commission
RFA	Request for Authorization
RFP	Request for Proposals
RFQ	Request for Quotes
RMRA	Road Maintenance and Rehabilitation Account
ROFA	Runway Object Free Area
RPU	Riverside Public Utilities
RSA	Runway Safety Area
RTRP	Riverside Transmission Reliability Project
RWQCP	Riverside Water Quality Control Plant
SB	Senate Bill (California)
SCADA	Supervisory Control and Data Acquisition
SCAQMD	South Coast Air Quality Management District
SCE	Southern California Edison
SCF	Standard Cubic Feet
SR	State Route
TCEA	Trade Corridor Enhancement Account
TMC	Traffic Management Center
TUMF	Transportation Uniform Mitigation Fee
UCR	University of California, Riverside
UP	Union Pacific Railroad
UWAM	Work Order and Assets Management System
WAS	Waste Activated Sludge
WIS	Work, Asset and Inventory Management System
WQCP	Riverside Water Quality Control Plant
WRCOG	Western Riverside Council of Government
YIC	Youth Innovation Center
YOC	Youth Opportunity Center



INDEXES

This Page Intentionally Left Blank

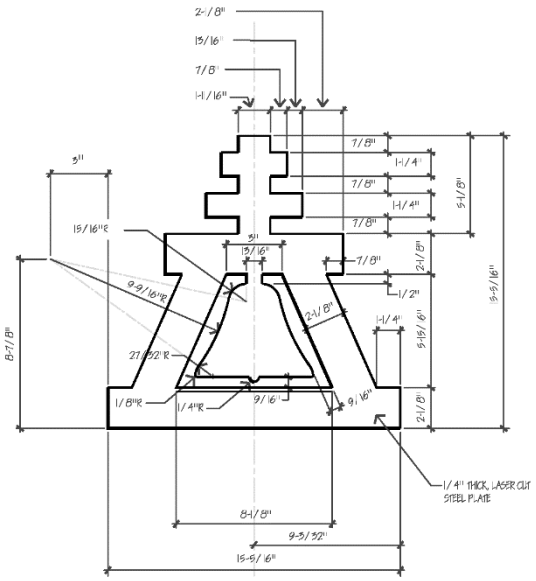

INDEX I – PROJECTS BY DESCRIPTION

1

14th Street Underpass Storm Drain (8870) 197

A

Adams Street/State Route 91 Interchange Improvements (8821) 215
Advanced Distribution Management System (470830E) 41
Advanced Metering Infrastructure (470823E) 42
Advanced Metering Infrastructure (470823W) 271
Airport Master Plan (9306) 33
Airport Pavement Management Study (2836) 34
Airport Runway Safety Area Erosion Design (2837) 35
Airport Taxiway A Rehabilitation (2815) 36
Analog Simulcast Communication System (9250) 87
Arlington Ave Drain Project (9331) 198
Arlington Park Site Improvements (9233) 105
Arterial Interconnect Maintenance & Replacement (5862) 216

B

Battery Backup System Installation (9136) 217
Biosolids Handling Rehabilitation (8928) 155
BNSF Quiet Zone - Mission Inn To Marlborough Ave (8610) 147
BNSF/Third Street Grade Separation (9901) 148
BNSF/UP Quiet Zone - Panorama & Cridge (5934) 149
Bobby Bonds Skate Park (9296) 106
Bordwell Park Gymnasium (2769) 107
Bordwell Park Slurry/Stripe Parking Lots (2762) 108

C

Cable Replacement - Public Works street Rehabilitation (470636E) 44
Cable Replacement (470635E) 43
Capacitors - Regulators (470612E) 45
CDBG Street Improvements - Matching Funds (8888) 218
Cesar Chavez Art Center (4102) 109
Chicago & Central Slope Repair (9278) 199
Chicago Bike Lanes & Sidewalks (9309) 219
City Attorney's Office Renovation (9255) 88
City Buildings Deferred Maintenance (9019) 89
City Hall Basement Flood Damages (9344) 90
City Hall Elevator Modernization (9313) 91
City Hall Lobby Renovation (9343) 92
Citywide Communications (470664E) 46
Citywide ITS Master Plan (2823) 220
Citywide Park Improvements (2795) 110
Citywide Pedestrian and Bike Infrastructure (9915) 221
Civil Rights Walk Improvements (9266) 222
Controller Assembly Replacement (5183) 223
Convention Center Chiler (9249) 93
Critical Airport Improvements (9279) 37

Crossing & Minor Sign Improvements (9207) 224
Curb & Gutter Repairs (8883) 225
Customer Information System (CIS) Upgrade (470694E) 47

D

Dark Fiber (470698E) 48
Dexter Wastewater (8659) 156
DIgital Modernization Upgrade (470825W) 272
Distribution Automation (470655E) 49
Distribution Automation/Reliability (470655W) 273
Distribution Line Extensions (470601E) 50
Distribution System Facilities Replacements (470706W) 274
Downtown Parking Garage #8 (6005) 135

E

Eastside Library (9074) 94
Enterprise Application Modernization (9231) 83
Enterprise Operation Data Management System (470822E) 51
Enterprise Operation Data Management System (470822W) 275

F

Facility Rehabilitation Program (470803W) 276
Fairgrounds Wastewater (8334) 157
Fairmount Park Armory Coversion (2828) 111
Fairmount Park Golf Cart Barn (9261) 112
Fairmount Park Lake Dredging (9301) 113
Fairmount Park Lake Evans Lakeshore Access (9099) 114
Fairmount Park Lake Evans Weir Box Repair (9229) 115
Fairmount Park Master Plan (9293) 116
Fairmount Park Rose Garden Improvements (9181) 117
Fairmount Park Storm Drain (9329) 200
Fairmount Park Storm Drain Rehabilitation (9214) 201
Fairmount Park University Wash Renovation (9294) 118
Feedstock Reception Station (3522) 158
Five Points Intersection Improvements (9265) 226
Fourteenth Street Underpass Pump Station Project (9314) 202

G

Gage Canal Trail Improvements (4092) 119
General Order 165 Upgrades/Line Rebuilds/Relocation - Overhead (470623E) 52
General Order 165 Upgrades/Line Rebuilds/Relocation - Underground (470624E) 53
Generating Station (470627E) 54
Generator Replacement/Repairs (9258) 95

H

Harada House and Interpretive Center (2722) 96
Hole Lake Master Plan (9335) 120
Houghton Avenue Storm Drain Improvements (9327) 203
Hunter Substation (470699E) 55

J

Jurupa Avenue Extension (5984) 227

L

Land Mobile Radio (470827E) 56
Land Mobile Radio (470827W) 277
LED Signal Lens Replacements (8619) 228
Lincoln Street Storm Drain Project (9328) 204
Line Rebuilds (470603E) 57

M

Main Replacements Program (470707W) 278
Major 4-12 kV Conversion (470644E) 58
Major Feeders (470633E) 59
Major Overhead / Underground Conversions (470619E) 60
Major Streetlight Projects (470637E) 61
Major Streets Rehabilitation (8880) 229
Major Tract Distribution (470626E) 62
Major Transmission Line Projects (470620E) 63
Marcy Library Office Renovations (9259) 121
Market Street Bridge Replacement over the Santa Ana River (8699) 230
Marketplace Ped/Bike Bridge Master Plan (2822) 231
Martha McLean Park Vehicular Access Barriers (9251) 122
Master Drainage Plan – Line D Storm Drain (9209) 205
Master Drainage Plan – Line E1 Storm Drain (9097) 206
Master Drainage Plan - Monroe Channel Stage 5 Storm Drain (9098) 207
Meters (470613E) 64
Meters (470702W) 279
Minor Street Preservation (8894) 232
Minor Street Rehabilitation (8884) 233
Miscellaneous bridge Repair (8973) 234
Miscellaneous Signal Revisions (5861) 235
Miscellaneous Storm Drain Construction (7001) 208
Miscellaneous Street Construction (5070) 236
Miscellaneous Traffic Projects (8832) 237
Mission Boulevard Bridge Replacement at Santa Ana River (8629) 238
Mitchell Avenue Sidepath Project (4107) 239
Mobile Applications (470831E) 65
Mobile Applications (470831W) 280
Monticello Landscape Maintenance & Fence (9270) 240
Mount Rubidoux Trail Landscape Improvements (9089) 123
Museum Expansion & Rehabilitation (9017) 97

N

Neighborhood StreetLight Retrofit (470638E) 66
Network Communication System (470826E) 67
Network Communication System (470826W) 281
New Traffic Signal Installations (8341) 241
Nichols Park Playground (9295) 124
Northside Agricultural Innovation Center Phase I (3391) 98
Northside Master Drainage Study (9183) 209
Northside Traffic Mitigation Fee (9195) 242

O

On-Street Space Monitoring System (6001) 136
Operational Technology Governance (470824E) 68
Operational Technology Governance (470824W) 282
Orange Street Widening Improvement Project (9180) 243
Orange Terrace Library HVAC (3465) 99
Orange Terrace Park Lower Playground and Shade Structure (9345) 125
Outage Management System (470829E) 69

P

Parking Garage – Guidance, Lighting, Camera System (9134) 137
Parking Garage #1 & #2 - Structural Maintenance (9135) 138
Parking Garage #3 - Structural Maintenance (9217) 139
Parking Garage #7 - Structural Maintenance (6003) 140
Parking String Lighting (9298) 244
Parks Deferred Maintenance (2807) 126
Patterson Park Renovation (3397) 127
Pavement Rehabilitation & Improvements (9027) 245
Pedestrian Ramps (8887) 246
Pierce Pump Street Station Rehabilitation (9100) 159
Police Headquarters (9018) 100
Polyfluoroalkyl Substances (PFAS) Palmyrita Treatment Plant (470841W) 283
Potable/Irrigation Well Replacements (470833W) 284
Priority Pipeline Assessment & Repair (9115) 160
Pump Station Replacements (470802W) 285

R

Recycled Water Facilities – Riverside Habitat Parks and Water Project (470811W) 286
Repaving & Restriping Parking Lots (5999) 141
Replace IPS Pay Stations (6006) 142
River District Feasibility Study (3490) 128
Riverside Access Center Rehabilitation (9263) 101
Riverside Neighborhood Safety (2821) 247
Riverside Safe Routes To School Plan (4106) 248
Riverside Transmission Reliability Project (RTRP) (470685E) 70
RMRA Rehabilitation & Traffic Improvements (9151) 249

S

Santa Ana River Gateway Parks Master Plan (3399) 129
SCADA Upgrade & System Automation (470832W) 287
Services (470615E) 71
Seven Oaks Dam Conservation - Enhanced Recharge (470813W) 288
Sewer Main Replacement - Kmart Lot (9108) 161
Sewer Main Replacement - Rutland Avenue (9106) 162
Sewer Main Replacement - Santa Ana River Trail (9110) 163
Sewer Main Replacement - West Rutland Avenue (9107) 164
Sewer Pipe Replacement - Arlington Valley Channel (9112) 165
Sewer Pipe Replacement - Golden Avenue (9109) 166
Sewer Pipe Replacement - Morris Street (9113) 167
Sidewalk Fronting Patricia Beatty (9143) 250
Sidewalk Repair Program (8886) 251
Sidewalk/Trail Construction (8885) 252

South Main Complete Streets (2808) 253
Southern California Edison (SCE) Condemnation Costs (470634E) 72
Special Transportation Zero Emission Infrastructure (4112) 130
Speed Hump Traffic Calming Program (9272) 254
Speed Limit Reduction Program (2809) 255
Storm Drain Field Office (9227) 210
Stover Avenue Sidewalk Project (9914) 256
Street Lighting (470607E) 73
Substation Bus & Upgrades (470616E) 74
Substation Innovation (470614E) 75
Substation Transformer Addition (470632E) 76
Supervisory Control and Data Acquisition (SCADA) (470672E) 77
Sycamore Canyon Wilderness Park Trailhead (9036) 131
System Expansion (470701W) 289
System Substation Modifications (470608E) 78

T

Tequesquite Landfill Blower Project (9218) 168
Tertiary System Rehabilitation - Phase I (8613) 169
Third Street Building Demo (9332) 150
Third Street Sewer Improvement (9325) 170
Thirteenth Street Storm Drain (9330) 211
Traffic Detection Replacement Program (9215) 257
Traffic Management Center (5931) 258
Traffic Signal Backplates LPI, & Mission Inn Barrier (9253) 259
Traffic Signal Communication Equipment (9216) 260
Traffic Signal Pole Replacement & Relocation (9145) 261
Traffic Signal Preemption Device Replacement (9146) 262
Transformers (470611E) 79
Transmission Mains (470735W) 290

U

Uninterrupted Power Supply Backup System (5996) 143
UP Quiet Zone - Brockton & Palm (8721) 151
Upper Santa Ana River Habitat Conservation Plan (470819W) 291

V

Van Buren – Jurupa to Santa Ana River Bridge (8409) 263
Van Buren Class II Bike Lanes (9308) 264
Vehicle Miles Traveled Mitigation Study (9206) 265
Victoria Avenue Beautification (9280) 266

W

Wastewater Lift Stations (8943) 171
Water Quality Control Plant - 3D GIS Asset Management (9223) 172
Water Quality Control Plant - Activated Treatment Train Rehabilitation (9118) 173
Water Quality Control Plant - Biosolids Equipment and Piping Rehab (9178) 174
Water Quality Control Plant – Butterfly Valve Replacement (9337) 175
Water Quality Control Plant - Chlorine Contact Basin Rehabilitation (9179) 176
Water Quality Control Plant - Digester No. V Rehabilitation (9124) 177
Water Quality Control Plant - Gas Line Repair (9300) 178
Water Quality Control Plant - Headworks Area Rehabilitation (9117) 179

Water Quality Control Plant - Master Plan Update (8944) 180
Water Quality Control Plant - Plant II Activated Sludge Rehabilitation (9045) 181
Water Quality Control Plant - Plant II Sludge Pumps I & II Rehabilitation (9119) 182
Water Quality Control Plant - Renewable Natural Gas Interconnection Facility (9125) 183
Water Quality Control Plant - SCADA Infrastructure Replacement (9127) 184
Water Quality Control Plant - Security Upgrades Phase III (9221) 185
Water Quality Control Plant - Solar Shade Structures (9909) 186
Water Quality Control Plant - Storage Sheds - Jurupa (9910) 187
Water Quality Control Plant - Switchgear Replacement (9126) 188
Water Quality Control Plant - Upgrade Flow Meters to Electromagnetic Meters (9116) 189
Water Quality Control Plant - Warehouse Building Replacement (9123) 190
Water Quality Control Plant - WI-FI Phase III (9224) 191
Water Stock (470705W) 292
Western, Martin Luther King, & Garden Hill Lift Station Rehabilitation (9101) 192
Whittier Place Alley Fencing (9304) 267
Woodcrest Sewer Construction - Phase I (8969) 193
Work, Asset, & Inventory Management Systems (470825E) 80

INDEX II – PROJECTS BY PROJECT NUMBER

2

2722 - Harada House and Interpretive Center....96
2762 - Bordwell Park Slurry/Stripe Parking Lots....108
2769 - Bordwell Park Gymnasium....107
2795 - Citywide Park Improvements....110
2807 - Parks Deferred Maintenance....126
2808 - South Main Complete Streets Replacement....253
2809 - Speed Limit Reduction Program....255
2815 - Airport Taxiway A Rehabilitiation....36
2821 - Riverside Neighborhood Safety....247
2822 - Marketplace Ped/Bike Bridge Master Plan....231
2823 - Citywide ITS Master Plan....220
2828 - Fairmount Park Armory Conversion....111
2836 - Airport Pavement Management Study....34
2837 - Airport Runway Safety Area Erosion Design....35

3

3391 - Northside Agricultural Innovation Center Phase I....98
3397 - Patterson Park Renovation....127
3399 - Santa Ana River Gateway Parks Master Plan....129
3465 - Orange Terrace Library HVAC....99
3490 - River District Feasibility Study....128
3522 - Feedstock Reception Station....158

4

4092 - Gage Canal Trail Improvements....119
4102 - Cesar Chavez Art Center....109
4106 - Riverside Safe Routes To School Plan....248
4107 - Mitchell Avenue Sidepath Project....239
4112 - Zero Emission Infrastructure....130
470601E - Distribution Line Extensions....50
470603E - Line Rebuilds....57
470607E - Street Lighting....73
470608E - System Substation Modifications....78
470611E - Transformers....79
470612E - Capacitors - Regulators....45
470613E - Meters....64
470614E - Substation Innovation....75
470615E - Services....71
470616E - Substation Bus & Upgrades....74
470619E - Major Overhead / Underground Conversions....60
470620E - Major Transmission Line Projects....63
470623E - General Order 165 Upgrades/Line Rebuilds/Relocation - Overhead....52
470624E - General Order 165 Upgrades/Line Rebuilds/Relocation - Underground....53
470626E - Major Tract Distribution....62
470627E - Generating Station....54
470632E - Substation Transformer Addition....76
470633E - Major Feeders....59

470634E - Southern California Edison (SCE) Condemnation Costs 72
470635E - Cable Replacement 43
470636E - Cable Replacement - Public Works Street Rehabilitation 44
470637E - Major Streetlight Projects 61
470638E - Neighborhood Streetlight Retrofit 66
470644E - Major 4-12 KV Conversion 58
470655E - Distribution Automation 49
470655W - Distribution Automation/Reliability 273
470664E - Citywide Communications 46
470672E - Supervisory Control and Data Acquisition (SCADA) 77
470685E - Riverside Transmission Reliability Project (RTRP) 70
470694E - Customer Information System (CIS) Upgrade 47
470698E - Dark Fiber 48
470699E - Hunter Substation 55
470701W - System Expansion 289
470702W - Meters 279
470705W - Water Stock 292
470706W - Distribution System Facilities Replacements 274
470707W - Main Replacements Program 278
470735W - Transmission Mains 290
470802W - Pump Station Replacements 285
470803W - Facility Rehabilitation Program 276
470811W - Recycled Water Facilities - Riverside Habitat Parks and Water Project 286
470813W - Seven Oaks Dam Conservation - Enhanced Recharge 288
470819W - Upper Santa Ana River Habitat Conservation Plan 291
470822E - Enterprise Operation Data Management System 51
470822W - Enterprise Operation Data Management System 275
470823E - Advanced Metering Infrastructure 42
470823W - Advanced Metering Infrastructure 271
470824E - Operational Technology Governance 68
470824W - Operational Technology Governance 282
470825E - Work, Asset, & Inventory Management Systems 80
470825W – Digital Modernization Upgrade 272
470826E - Network Communication System 67
470826W - Network Communication System 281
470827E - Land Mobile Radio 56
470827W - Land Mobile Radio 277
470829E - Outage Management System 69
470830E - Advanced Distribution Management System 41
470831E - Mobile Applications 65
470831W - Mobile Applications 280
470832W - SCADA Upgrade & System Automation 287
470833W - Potable/Irrigation Well Replacements 284
470841W - Polyfluoroalkyl Substances (PFAS) Palmyrita Treatment Plant 283

5

5070 - Miscellaneous Street Construction 236
5183 - Controller Assembly Replacement 223
5861 - Miscellaneous Signal Revisions 235
5862 - Arterial Interconnect Maintenance & Replacement 216
5931 - Traffic Management Center 258
5934 - BNSF/UP Quiet Zone - Panorama & Cridge 149
5984 - Jurupa Avenue Extension 227
5996 - Uninterrupted Power Supply Backup System 143

5999 - Repaving & Restriping Parking Lots 141

6

6001 - On-Street Space Monitoring System 136
6003 - Parking Garage #7 - Structural Maintenance 140
6005 - Downtown Parking Garage #8 135
6006 - Replace IPS Pay Stations 142

7

7001 - Miscellaneous Storm Drain Construction 208

8

8334 - Fairgrounds Wastewater 157
8341 - New Traffic Signal Installations 241
8409 - Van Buren – Jurupa to Santa Ana River Bridge 263
8610 - BNSF Quiet Zone - Mission Inn to Marlborough Ave 147
8613 - Tertiary System Rehabilitation - Phase I 169
8619 - LED Signal Lens Replacements 228
8629 - Mission Boulevard Bridge Replacement at Santa Ana River 238
8659 - Dexter Wastewater 156
8699 - Market Street Bridge Replacement over the Santa Ana River 230
8721 - UP Quiet Zone - Brockton & Palm 151
8821 - Adams Street/State Route 91 Interchange Improvements 215
8832 - Miscellaneous Traffic Projects 237
8870 - 14th Street Underpass Storm Drain 197
8880 - Major Streets Rehabilitation 229
8883 - Curb & Gutter Repairs 225
8884 - Minor Street Rehabilitation 233
8885 - Sidewalk/Trail Construction 252
8886 - Sidewalk Repair Program 251
8887 - Pedestrian Ramps 246
8888 - CDBG Street Improvements - Matching Funds 218
8894 - Minor Street Preservation 232
8928 - Biosolids Handling Rehabilitation 155
8943 - Wastewater Lift Stations 171
8944 - Water Quality Control Plant - Master Plan Update 180
8969 - Woodcrest Sewer Construction - Phase I 193
8973 - Miscellaneous Bridge Repair 234

9

9017 - Museum Expansion & Rehabilitation 97
9018 - Police Headquarters 100
9019 - City Buildings Deferred Maintenance 89
9027 - Pavement Rehabilitation & Improvements 245
9036 - Sycamore Canyon Wilderness Park Trailhead 131
9045 - Water Quality Control Plant - Plant II Activated Sludge Rehabilitation 181
9074 - Eastside Library 94
9089 - Mount Rubidoux Trail Landscape Improvements 123
9097 - Master Drainage Plan – Line E1 Storm Drain 206
9098 - Master Drainage Plan - Monroe Channel Stage 5 Storm Drain 207
9099 - Fairmount Park Lake Evans Lakeshore Access 114
9100 - Pierce Pump Street Station Rehabilitation 159

9101 - Western, Martin Luther King, & Garden Hill Lift Station Rehabilitation 192
9106 - Sewer Main Replacement - Rutland Avenue 162
9107 - Sewer Main Replacement - West Rutland Avenue 164
9108 - Sewer Main Replacement - Kmart Lot 161
9109 - Sewer Pipe Replacement - Golden Avenue 166
9110 - Sewer Main Replacement - Santa Ana River Trail 163
9112 - Sewer Pipe Replacement – Arlington Valley Channel 165
9113 - Sewer Pipe Replacement - Morris Street 167
9115 - Priority Pipeline Assessment & Repair 160
9116 - Water Quality Control Plant - Upgrade Flow Meters to Electromagnetic Meters 189
9117 - Water Quality Control Plant - Headworks Area Rehabilitation 179
9118 - Water Quality Control Plant - Activated Treatment Train Rehabilitation 173
9119 - Water Quality Control Plant - Plant II Sludge Pumps I & II Rehabilitation 182
9123 - Water Quality Control Plant - Warehouse Building Replacement 190
9124 - Water Quality Control Plant - Digester No. V Rehabilitation 177
9125 - Water Quality Control Plant - Renewable Natural Gas Interconnection Facility 183
9126 - Water Quality Control Plant - Switchgear Replacement 188
9127 - Water Quality Control Plant - SCADA Infrastructure Replacement 184
9134 - Garage LED Lighting Upgrade 137
9135 - Parking Garage #1 & #2 - Structural Maintenance 138
9136 - Battery Backup System Installation 217
9143 - Sidewalk Fronting Patricia Beatty 250
9145 - Traffic Signal Pole Replacement & Relocation 261
9146 - Traffic Signal Preemption Device Replacement 262
9151 - RMRA Rehabilitation & Traffic Improvements 249
9178 - Water Quality Control Plant - Biosolids Equipment and Piping Rehab 174
9179 - Water Quality Control Plant - Chlorine Contact Basin Rehabilitation 176
9180 - Orange Street Widening Improvement Project 243
9181 - Fairmount Park Rose Garden Improvements 117
9183 - Northside Master Drainage Study 209
9195 - Northside Traffic Mitigation Fee 242
9206 - Vehicle Miles Traveled Mitigation Study 265
9207 - Crossing & Minor Sign Improvements 224
9209 - Master Drainage Plan – Line D Storm Drain 205
9214 - Fairmount Park Storm Drain Rehabilitation 201
9215 - Traffic Detection Replacement Program 257
9216 - Traffic Signal Communication Equipment 260
9217 - Parking Garage #3 - Structural Maintenance 139
9218 - Tequesquite Landfill Blower Project 168
9221 - Water Quality Control Plant - Security Upgrades Phase III 185
9223 - Water Quality Control Plant - 3D GIS Asset Management 172
9224 - Water Quality Control Plant - WI-FI Phase III 191
9227 - Storm Drain Field Office 210
9229 - Fairmount Park Lake Evans Weir Box Repair 115
9231 - Enterprise Application Modernization 83
9233 - Arlington Park Site Improvements 105
9249 - Convention Center Chiller 93
9250 - Analog Simulcast Communication System 87
9251 - Martha McLean Park Vehicular Access Barriers 122
9253 - Traffic Signal Backplates, LPI, & Mission Inn Barrier 259
9255 - City Attorney's Office Renovation 88
9258 - Generator Replacement/Repairs 95
9259 - Marcy Library Office Renovations 121
9261 - Fairmount Park Golf Cart Barn 112
9263 - Riverside Access Center Rehabilitation 101

9265 - Five Points Intersection Improvements....226
9266 - Civil Rights Walk Improvements....222
9270 - Monticello Landscape Maintenance & Fence....240
9272 - Speed Hump Traffic Calming Program....254
9278 - Chicago & Central Slope Repair....199
9279 - Critical Airport Improvements....37
9280 - Victoria Avenue Beautification....266
9293 - Fairmount Park Master Plan....116
9294 - Fairmount Park University Wash Renovation....118
9295 - Nichols Park Playground....124
9296 - Bobby Bonds Skate Park....106
9298 - Parking String Lighting....244
9300 - Water Quality Control Plant - Gas Line Repair....178
9301 - Fairmount Park Lake Dredging....113
9304 - Whittier Place Alley Fencing....267
9306 - Airport Master Plan....33
9308 - Van Buren Class II Bike Lanes....264
9309 - Chicago Bike Lanes & Sidewalks....219
9313 - City Hall Elevator Modernization....91
9314 - Fourteenth Street Underpass Pump Station Project....202
9325 - Third Street Sewer Improvement....170
9327 - Houghton Avenue Storm Drain Improvements....203
9328 - Lincoln Street Storm Drain Project....204
9329 - Fairmount Park Storm Drain....200
9330 - Thirteenth Street Storm Drain....211
9331 - Arlington Ave Storm Drain Project....198
9332 - Third Street Building Demo....150
9335 - Hole Lake Master Plan....120
9337 - Water Quality Control Plant - Butterfly Valve Replacement....175
9343 - City Hall Lobby Renovation....92
9344 - City Hall Basement Flood Damages....90
9345 - Orange Terrace Park Lower Playground and Shade Structure....125
9901 - BNSF/Third Street Grade Separation....148
9909 - Water Quality Control Plant - Solar Shade Structures....186
9910 - Water Quality Control Plant - Storage Sheds - Jurupa....187
9914 - Stover Avenue Sidewalk Project....256
9915 - Citywide Pedestrian and Bike Infrastructure....221