APPENDIX III

STANDARD DRAWINGS

INDEX

CWD	TITLE
010-1	Typical Cover Sheet
010-2	Typical Plan Layout
010-3	Typical Plan Detail
015-1	Water Main and Sanitary Sewer Separation, Case 1
015-2	Water Main and Sanitary Sewer Separation, Case 2
015-3	Water Main and Sanitary Sewer Separation, Notes
023-1	Structure Interference Type A, B, or C Encasement
023-2	Structure Interference Encasement Sections
030	Thrust Block Details, Typical
040-1	Typical Pipe Trench, Bedding, Backfill and Pavement Requirements
040-2	Typical Pipe Trench, Bedding, Backfill and Pavement Requirements
220	Typical Split Butt Strap, 8” Through 54” Diameter (150 PSI Design Pressure)
300	Typical Flanged Outlet, 4” Through 20”
320	Typical Flanged Tangent Outlet, 4” Through 12” Diameter
340	Typical Threaded Outlet, 1” Thru 2 ½” Diameter
350	Typical Manway For Large Pipelines
408	6” Hydrant Head Blow-Off, ML&C Steel Bury, 24” Main and Smaller
409	6” Hydrant Head Blow-Off, Di Bury, 24” Main and Smaller
410-A	8” Blow-Off, Below Grade, With Less Than 10’ of Cover
410-B	8” Blow-Off, Below Grade, With More Than 10’ of Cover
411-A	Typical 2” Blow-Off Assembly, For Mains With Less Than 42” Of Cover
411-B	Typical 2” Blow-Off Assembly, For Mains With More Than 42” Of Cover
412	4” Through 10”, Temporary Construction End Caps, For Flushing, Testing & Chlorination
413	12” – 20” DI Temporary Construction End Cap For Flushing, Testing & Chlorination
414	For Steel 16” – 54” CML&C Temporary Construction End Cap for Flushing, Testing, and Chlorination
432	Temporary Water Sampler
433	Water Quality Sampling Station
451	Typical 2” Air Valve Installation
460	Typical 4” Air Valve Installation
462	Typical 6” Air Valve Installation
465	Typical 8” Air Valve Installation
500	Typical Valve Box For Gate Valves
504	Tapping Sleeve And Tapping Valve Detail For Domestic And Fire Services
510	Typical Valve Box For Butterfly Valves
515	Typical Split-Sleeve Liner And Cap For 8” and 10” Valve Box
570	Typical Conduit Support
600	1” Water Service
601	2” Water Service
614	Temporary, Emergency, or Construction Water Service / Backflow Protection
615	4” Thru 12” Above Ground Fire Service
616-1	Backflow Prevention Assembly ¾ - 2-1/2” Above Ground Installation
616-2	Backflow Prevention Assembly Alternative Location Installation
617	Backflow Prevention Assembly 3” & Larger Above Ground Installation
620-1	3”, 4” and 6” Compound Meter Water Service
620-2	Bill Of Materials For 3”, 4” and 6” Compound Meter Water Service
621-1	8” FMCT Water Service
621-2	Bill Of Materials For 8” FMCT Water Service

INDEX

CWD	TITLE
622-1	10” Domestic Water Service
622-2	Bill Of Materials for 10” Compound Water Service
700	Regular and Super Fire Hydrant Detail
800-1	Traffic Vault For 3” Thru 6” Compound Meters
800-2	Traffic Vault For 3” Thru 6” Compound Meters
801-1	Traffic Vault For 8”, 10”, and 12” Compound Meters
801-2	Traffic Vault for 8”, 10”, and 12” Compound Meters
811	Blow-Off Manhole Installation
816	Manhole Detail 48” Max ID Pipe
900-A	4” Dia. Guard Post Installation
900-B	2.5” Dia. Guard Post Installation
922	Test Lead Installation
923	Flange Insulation and Test Lead Installation
924	Joint Bond Details
960-1	Notification Sign Layout
960-2	Notification Sign Installation

0	DRAWN	DATE	CHECK	APPROV.	1	DRAWN	DATE	CHECK	APPROV.	2	DRAWN	DATE	CHECK	APPROV.	3	DRAWN	DATE	CHECK	APPROV.
	MMc	10–'09																	

CITY OF RIVERSIDE PUBLIC UTILITIES STANDARD DRAWING

WATER
DISTRIBUTION & TRANSMISSION
CONSTRUCTION METHODS

TYPICAL COVER SHEET

DATE: OCT 2009

CWD-010-1

REEFER TO: SPECIFICATION 205

APPENDIX I – DESIGN CRITERIA SECTION 3.05 GENERAL NOTES

GENERAL NOTES

1. ALL CONSTRUCTION SHALL BE IN ACCORDANCE WITH THESE PLANS AND IN CONFORMANCE WITH THE CITY OF RIVERSIDE PUBLIC UTILITIES DEPARTMENT, WATER DIVISION, STANDARD SPECIFICATION NO. 205 FOR WATER DISTRIBUTION SYSTEMS, LATEST REVISION; ALL APPLICABLE A.W.W.A. STANDARDS AND SPECIFICATIONS, EXCEPT AS NOTED; AND THE STANDARD SPECIFICATIONS FOR PUBLIC WORKS CONSTRUCTION (GREENBOOK), LATEST ADOPTED EDITION AND AMENDMENTS.
2. ALL WATER MAINS 12 INCH AND UNDER SHALL BE CLASS 350 D.I.P. PER A.W.W.A. C–151. ALL PIPE JOINTS SHALL BE RESTRAINED WITH ROMAC INDUSTRIES, INC. "GRIP RING" GASKETS, U.S. PIPE AND FOUNDRY CO. "FIELD–LOK" GASKETS OR WATER DIVISION APPROVED EQUAL.
3. APPROVAL OF THIS PLAN BY THE WATER DIVISION DOES NOT RELIEVE THE PRIVATE ENGINEER OF THE DESIGN RESPONSIBILITY THEREOF. THE PRIVATE ENGINEER SIGNING THESE PLANS IS RESPONSIBLE FOR ASSURING THE ACCURACY AND ACCEPTABILITY OF THE WORK HEREON. IN THE EVENT OF DISCREPANCIES ARISING DURING CONSTRUCTION, THE PRIVATE ENGINEER SHALL BE RESPONSIBLE FOR DETERMINING AN ACCEPTABLE SOLUTION AND REVISING THE PLANS FOR APPROVAL BY THE CITY.
4. THE DEVELOPER SHALL BE RESPONSIBLE FOR PRESERVING OR RE–ESTABLISHING AND REFERENCING SURVEY MONUMENTS DESTROYED, DISTURBED OR BURIED AS A RESULT OF THE CONSTRUCTION SHOWN HEREON.
5. WATER MAINS SHALL BE LAID TO THE LINE AND GRADE SHOWN ON THE PLAN AND PER CWD–040.
   - A. THE DEVELOPER'S ENGINEER SHALL PROVIDE A CONSTRUCTION OFF–SET LINE AND STATION ALL FITTINGS AND APPURTENANCES. CUT SHEETS SHALL BE PROVIDED FOR PIPELINES ON ALL STREETS.
   - B. MINIMUM DEPTH OF COVER OVER WATER MAINS UNDER 12 INCHES IN DIAMETER SHALL BE 3.0 FEET, UNLESS OTHERWISE NOTED. ALL 12 INCH DIAMETER WATER MAINS SHALL HAVE 4.0 FEET OF COVER.
6. THE EXISTENCE AND LOCATION OF ANY UNDERGROUND UTILITY PIPES, CONDUITS, CABLES OR STRUCTURES SHOWN ON THESE PLANS WERE OBTAINED BY A SEARCH OF AVAILABLE RECORDS. TO THE BEST OF OUR KNOWLEDGE, THERE ARE NO EXISTING UTILITIES EXCEPT AS SHOWN ON THESE PLANS. THE CONTRACTOR IS REQUIRED TO TAKE DUE PRECAUTIONARY MEASURES TO PROTECT THE UTILITY LINES SHOWN, OR ANY OTHER LINES NOT OF RECORD OR NOT SHOWN ON THESE PLANS.
7. PROPOSED ELECTRICAL UNDERGROUND AND STREET LIGHT FACILITIES ARE NOT SHOWN ON THE PLAN. THE CONTRACTOR SHALL COORDINATE INSTALLATION WITH THE DEVELOPER AND PUBLIC UTILITIES DEPARTMENT, ELECTRICAL DIVISION, 951–826–5452, FOR LOCATIONS OF THE PROPOSED ELECTRICAL AND STREET LIGHT FACILITIES.
8. PIPE SHALL BE HANDLED SO AS TO PROTECT PIPE AT ALL TIMES AND SHALL BE CAREFULLY BEDDED TO PROVIDE CONTINUOUS BEARING AND TO PREVENT UNEVEN SETTLEMENT. PIPE SHALL BE PROTECTED AGAINST FLOTATION AT ALL TIMES. OPEN ENDS SHALL BE SEALED AT ALL TIMES WHEN CONSTRUCTION IS NOT IN PROGRESS.
9. UNLESS OTHERWISE APPROVED, WATER MAINS AND SEWER MAINS SHALL NOT CROSS WITH LESS THAN 1.0 FOOT OF VERTICAL CLEARANCE. WATER SERVICE LINES AND SEWER LATERALS SHALL NOT BE IN THE SAME TRENCH. A MINIMUM, HORIZONTAL CLEARANCE OF 10 FEET IS REQUIRED. WATER MAINS SHALL CLEAR ALL HOUSE SEWER LATERALS BY A MINIMUM OF 1.0 FOOT VERTICAL CLEARANCE (PER CWD–015 AND CWD–023).
10. WATER METER BOXES AND FIRE HYDRANTS SHALL BE PLACED AT CURB SITE LOCATIONS. THE CONTRACTOR SHALL ADJUST THE METER BOXES TO SIDEWALK GRADE AFTER THE SIDEWALKS HAVE BEEN POURED. WATER METER BOXES SHALL NOT BE LOCATED IN DRIVEWAYS.
11. A MATERIAL LIST, PER WATER DIVISION SPECIFICATION NO. 205, SECTION 3–11 AND MATERIAL CERTIFICATIONS MUST BE SUBMITTED FOR WATER DIVISION APPROVAL PRIOR TO INSTALLATION.
12. THE CONTRACTOR MAY BEGIN CONSTRUCTION ONLY AFTER A PRECONSTRUCTION MEETING IS HELD WITH THE WATER DIVISION ENGINEERING STAFF. CONTACT WATER CONSTRUCTION INSPECTION AT 951–826–5672, AT LEAST ONE WEEK PRIOR TO THE PLANNED START OF CONSTRUCTION OF THE WATERLINES TO ARRANGE THIS MEETING.
13. THE CONTRACTOR SHALL CALL IN A LOCATION REQUEST TO UNDERGROUND SERVICE ALERT (USA), 1–800–227–2600, TWO WORKING DAYS BEFORE DIGGING. NO STREET OPENING PERMIT WILL BE ISSUED BY THE PUBLIC WORKS DEPARTMENT INVOLVING EXCAVATION FOR UNDERGROUND FACILITIES UNLESS THE APPLICANT HAS BEEN PROVIDED AN INQUIRY IDENTIFICATION NUMBER BY USA. ALL NECESSARY PERMITS SHALL BE TAKEN OUT BY THE CONSTRUCTION CONTRACTOR. A STREET OPENING PERMIT, ISSUED BY THE PUBLIC WORKS DEPARTMENT, OR A RIVERSIDE COUNTY ENCROACHMENT PERMIT, DEPENDING UPON JURISDICTION, IS REQUIRED PRIOR TO THE START OF CONSTRUCTION.
14. THE CONTRACTOR SHALL POTHOLE EXISTING UTILITIES, PRIOR TO CONSTRUCTION, TO DETERMINE THE DEPTH OF COVER. THE WATER MAIN SHALL BE INSTALLED WITH THE REQUIRED VERTICAL CLEARANCE. IF INSUFFICIENT COVER EXISTS, THE CONTRACTOR SHALL CONTACT THE PRIVATE ENGINEER WHO SIGNED THE PLAN TO DETERMINE AN ACCEPTABLE SOLUTION.
15. THE CONTRACTOR SHALL REQUEST WATER DIVISION INSPECTION TWO WORKING DAYS PRIOR TO TRENCHING. PLANS AND SPECIFICATIONS SHALL BE ON–SITE AT ALL TIMES.
16. WATER MAINS SHALL BE SAND BEDDED IN ACCORDANCE WITH CWD–040. NATIVE MATERIAL WITH A SAND EQUIVALENT GREATER THAN 30 WILL BE ALLOWED.
17. THE CONTRACTOR SHALL NOT BACKFILL ANY TRENCHED UNTIL HE HAS OBTAINED AS–BUILT STATIONING ON ALL FITTINGS AND APPURTENANCES. PRESSURE TESTING WILL NOT BE ALLOWED UNTIL AS–BUILTS, SUBMITTED BY THE CONTRACTOR, HAVE BEEN APPROVED BY THE WATER DIVISION.
18. THE CONTRACTOR SHALL BULKHEAD MAINS, PLACE AND COMPACT BACKFILL, TEST, STERILIZE AND PASS BACTERIOLOGICAL TESTING BEFORE ANY TIE–INS ARE MADE TO THE CITY SYSTEM. CITY FORCES WILL MAKE THE FINAL SYSTEM CONNECTIONS FROM THE EXISTING MAIN. NO CONNECTIONS WILL BE MADE UNTIL ALL TESTING IS COMPLETE AND WRITTEN PASSING BACTERIOLOGICAL TEST RESULTS HAVE BEEN SUBMITTED TO THE WATER DIVISION.
   - A. PRESSURE TESTING SHALL BE CONDUCTED AFTER THE TRENCH BACKFILL HAS PASSED THE REQUIRED COMPACTION TESTS. HYDRO TEST PRESSURE SHALL BE 200 PSI FOR TWO HOURS. THE LEAKAGE LIMIT IS 15 GALLONS PER INCH DIAMETER PER MILE, PER 24 HOURS FOR DIP PIPE. NO LEAKAGE IS ALLOWED FOR WELDED STEEL PIPE.
   - B. CHLORINATION SHALL BE PERFORMED PER PART 7, SECTION 700–5 OF SPECIFICATION 205. GAS CHLORINATION WILL NOT BE ALLOWED. AFTER THE MINIMUM CHLORINATION CONTACT TIME, THE CONTRACTOR SHALL DECHLORINATE THE TEST WATER IN ACCORDANCE WITH THE CALIFORNIA REGIONAL WATER QUALITY CONTROL BOARD SANTA ANA REGION ORDER NO. 98–67 AND NATIONAL POLLUTION DISCHARGE ELIMINATION SYSTEMS (NPDES) NO. CAG998001.
   - C. A MINIMUM OF TWO BACTERIOLOGICAL TESTS ARE REQUIRED, PER DAY. APPROXIMATELY ONE SAMPLE SHALL BE TAKEN PER 500 FEET OF MAIN FOR TWO CONSECUTIVE DAYS.
19. REFER TO CITY OF RIVERSIDE PUBLIC WORKS DEPARTMENT DRAWINGS (LIST THE R–, S–, AND D– NUMBERS) FOR PROJECT COORDINATION.
20. BLUE HYDRANT REFLECTORS ARE REQUIRED FOR EACH HYDRANT.
21. ALL CURBS, GUTTERS, SEWER LINES AND STORM DRAIN LINES MUST BE INSTALLED PRIOR TO BEGINNING ANY WATER LINE INSTALLATION.

BENCHMARK:

CONTACT ENGINEERING SURVEYS AND LAND SERVICES DIVISION OF THE PUBLIC WORKS DEPARTMENT, 951–826–5341, FOR THE CITY APPROVED BENCHMARK.

BASIS OF BEARINGS:

PROVIDE THE BASIS OF BEARINGS FOR THE PROJECT.

PROVIDE A VICINITY MAP SHOWING PROJECT LOCATION, NORTH ARROW AND SCALE

PROVIDE AN INDEX MAP AT A SCALE OF 1" = 100' SHOWING PROPOSED IMPROVEMENTS AND PLAN SHEET INDEX (REQUIRED WHEN PLAN HAS 2 OR MORE SHEETS)

BILL OF MATERIALS

#	ITEM	QUANTITY	STD. DWG. REFERENCE
1	8" DIP CLASS 350	4,018 L.F.	CWD–040
2	1" WATER SERVICE ASSEMBLY	10 EA.	CWD–600
3	2" WATER SERVICE ASSEMBLY	1 EA.	CWD–601
4	FIRE HYDRANT ASSEMBLY	7 EA.	CWD–700
5	8"x 8"x 8" TEE	1 EA.	
6	8" – 11 1/4° ELBOW	1 EA.	
7	8" – 22 1/2° ELBOW	1 EA.	
8	8" – 30° ELBOW	1 EA.	
9	8" – 45° ELBOW	2 EA.	
10	8" FIRE SERVICE ASSEMBLY	1 EA.	CWD–615
11	8" TEMPORARY END CAP	1 EA.	CWD–412
12	2" AIR VALVE	1 EA.	CWD–451
13	8" GATE VALVE	2 EA.	CWD–500, 515
14	END CAP WITH 2" BLOW–OFF ASSEMBLY	2 EA.	CWD–411

CITY FORCES INSTALLATIONS

#	ITEM	QUANTITY
20	8"x 8" HOT TAP CONNECTION	1 EA.
21	8" STRAIGHT–IN CONNECTION	2 EA.
22	1" WATER SERVICE ASSEMBLY	10 EA.
23	EXTEND FIRE HYDRANT	1 EA.
24	3/4" DOMESTIC METER SET	10 EA.
25	2" LANDSCAPE METER SET	1 EA.

LEGEND

ITEM	EXISTING	PROPOSED
AIR VALVE		
CHECK VALVE		
CROSS		
DOMESTIC COPPER WATER SERVICE		
DISHED-HEAD		
ELBOW		
END CAP W/BO		
FIRE HYDRANT		
FIRE SERVICE		
MANHOLE W/ MANWAY		
REDUCER		
TAP SLEEVE		
TEE		
TEST LEADS		
TRACT BOUNDARY		
WATER LINE	8" W	
WATER SERVICE		
WATER SERVICE (BY CITY FORCES)	T	
WATER SERVICE (LANDSCAPE)	LS	
WATER VALVE		
CABLE TV	CTV	
ELECTRIC	E	
GAS	6" G	
SEWER	8" S	
STORM DRAIN	18" SD	
TELPHONE	T	

NOTE: SD & SEWER LINES 30" AND LARGER SHALL BE SHOWN WITH 2 LINES. DIMENSIONS SHALL BE SHOWN TO THE PIPE CENTERLINE.

NOTE: THIS SYSTEM SERVED BY _____ ZONE.

UNDERGROUND SERVICE ALERT
CALL TOLL FREE:
1-800
227-2600
TWO WORKING DAYS BEFORE YOU DIG

CITY OF RIVERSIDE
PUBLIC UTILITIES DEPARTMENT
OVERHEAD & UNDERGROUND
APPROVED BY ____ DATE ____

APPROVED BY:
FIRE HYDRANT LOCATION ONLY
RIVERSIDE FIRE DEPARTMENT DIVISION OF FIRE PROTECTION ____ DATE ____

ENGINEERING COMPANY TITLE BLOCK INCLUDE ENGINEER'S SIGNATURE AND STAMP

CITY OF RIVERSIDE
PUBLIC UTILITIES DEPARTMENT
WATER DIVISION
APPROVED BY ____ DATE ____
VOID ONE YEAR FROM THIS DATE

PROJECT NAME
WATER IMPROVEMENT PLANS

PUWXX-XXXX

DRAWING NO.
D5-XXXXXX
SHEET 1 OF X

SCALE: AS SHOWN

CADME PG.:

0	DRAWN	DATE	CHECK	APPROV.	1	DRAWN	DATE	CHECK	APPROV.	2	DRAWN	DATE	CHECK	APPROV.	3	DRAWN	DATE	CHECK	APPROV.
	MMc	10–'09																	

RIVERSIDE PUBLIC UTILITIES STANDARD DRAWING

WATER
DISTRIBUTION & TRANSMISSION
CONSTRUCTION METHODS

TYPICAL PLAN LAYOUT

DATE: OCT 2009

CWD-010-2

CURVE DATA PIPE					
SYM.	Δ	R	T	L	PIPE LENGTH
1	13° 46' 20.9"	1354.15'	163.53'	325.50'	

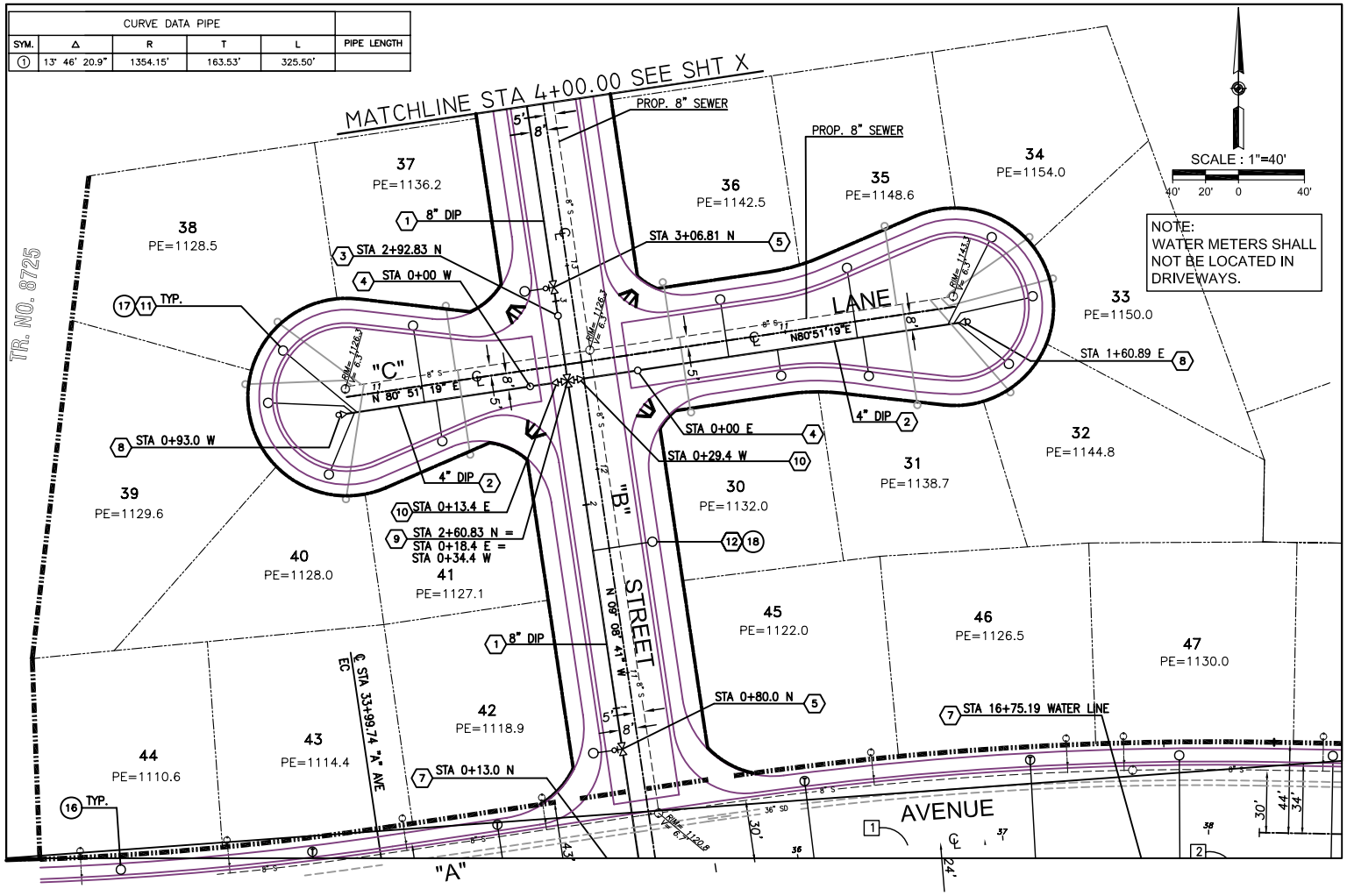

NOTE: THIS SYSTEM SERVED BY _____ ZONE.

UNDERGROUND SERVICE ALERT
CALL TOLL FREE:
1-800
227-2600
TWO WORKING DAYS BEFORE YOU DIG

CITY OF RIVERSIDE
PUBLIC UTILITIES DEPARTMENT
OVERHEAD & UNDERGROUND

APPROVED BY _____ DATE _____

APPROVED BY:
FIRE HYDRANT LOCATION ONLY

RIVERSIDE FIRE DEPARTMENT
DIVISION OF FIRE PROTECTION _____ DATE _____

ENGINEERING COMPANY TITLE
BLOCK INCLUDE ENGINEER'S
SIGNATURE AND STAMP

MARK	REVISIONS	APPR.	DATE

DESIGNED BY _____ DRAWN BY _____ CHECKED BY _____

CITY OF RIVERSIDE
PUBLIC UTILITIES DEPARTMENT
WATER DIVISION

APPROVED BY _____ DATE _____
VOID ONE YEAR FROM THIS DATE

PROJECT NAME
WATER IMPROVEMENT PLANS

SCALE: AS SHOWN

PUWXX-XXXX
DRAWING NO.
D5-XXXXXX
SHEET 1 OF X
CADME PG.:

3	DRAWN	DATE	CHECK	APPROV.	2	DRAWN	DATE	CHECK	APPROV.	1	DRAWN	DATE	CHECK	APPROV.	0	DRAWN WEF	DATE 10-09

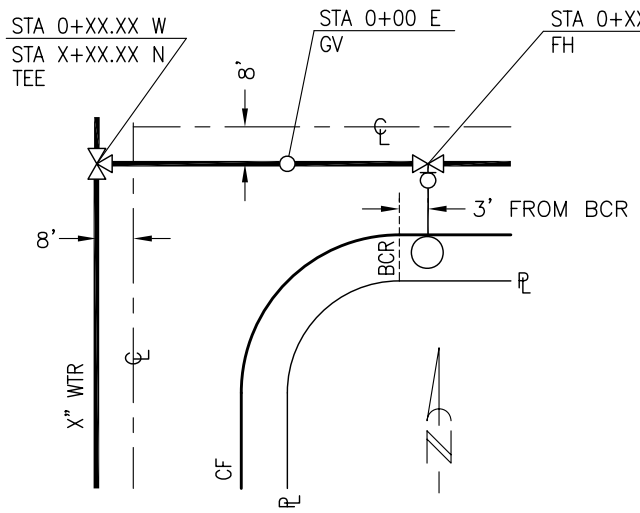

INTERSECTIONS

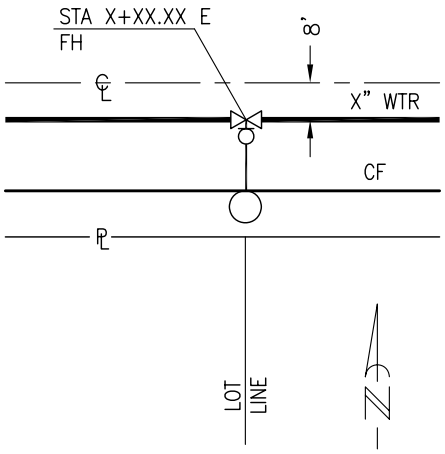

LOT LINES

FIRE HYDRANT LOCATIONS

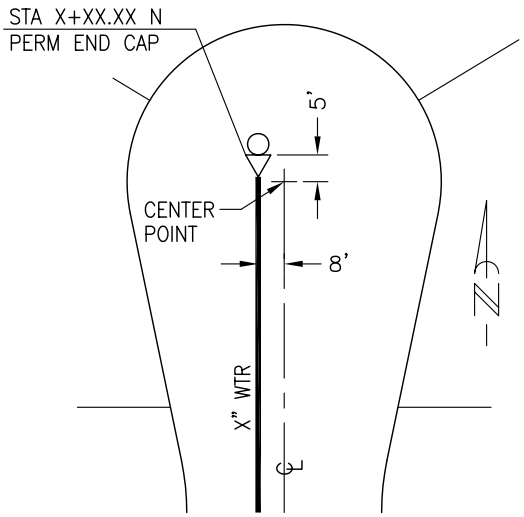

CUL-DE-SAC

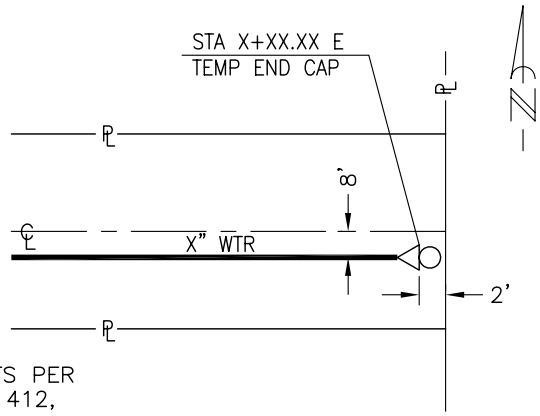

DEAD-END

NOTE:
TYPICAL BLOW-OFFS PER CWD-411A, 411B, 412, OR 413

END OF MAIN

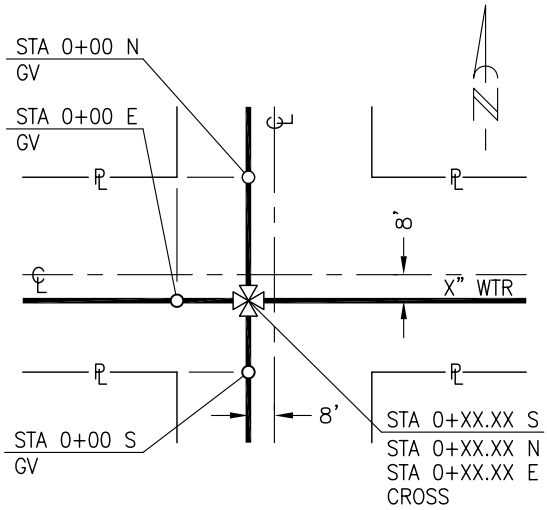

FOUR-WAY

NOTE:
VALVES SHALL BE LOCATED ON THE EXTENSION OF PROPERTY LINES

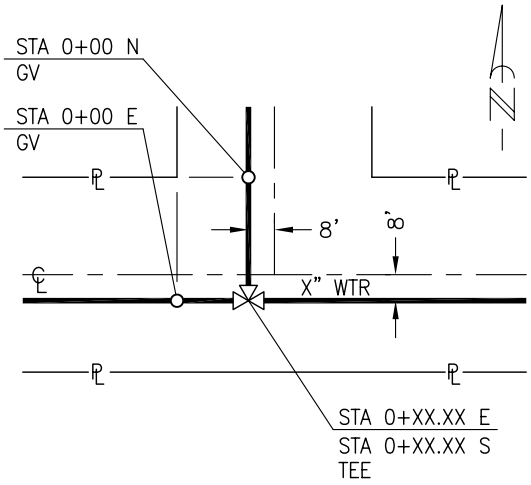

THREE-WAY

VALVE LOCATION

WATER
DISTRIBUTION & TRANSMISSION
CONSTRUCTION METHODS

TYPICAL PLAN DETAIL

CITY OF RIVERSIDE PUBLIC UTILITIES STANDARD DRAWING | DATE: OCT 2009 | CWD-010-3

3	DRAWN	DATE	CHECK	APPROV.	
2	DRAWN	DATE	CHECK	APPROV.	
1	DRAWN	DATE	CHECK	APPROV.	
0	DRAWN WEF	DATE 10-09	CHECK	APPROV.	

INSTALLATION OF NEW SANITARY SEWER

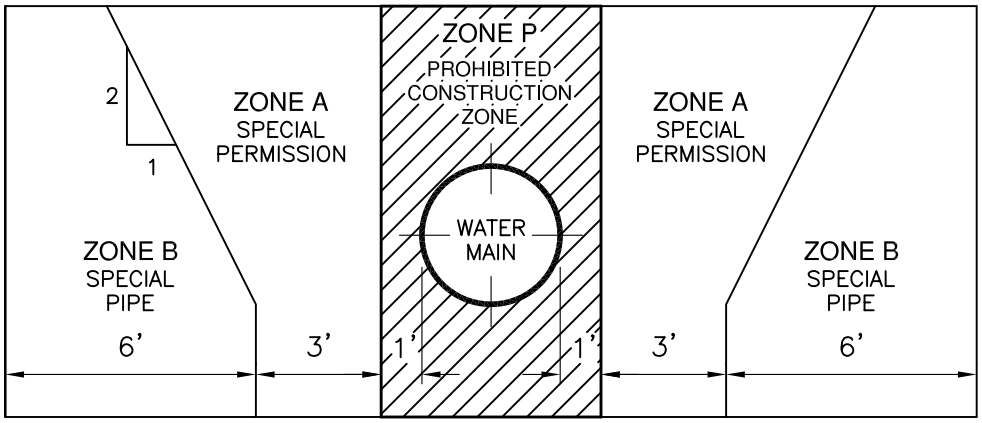

FIGURE 1 - PARALLEL CONSTRUCTION

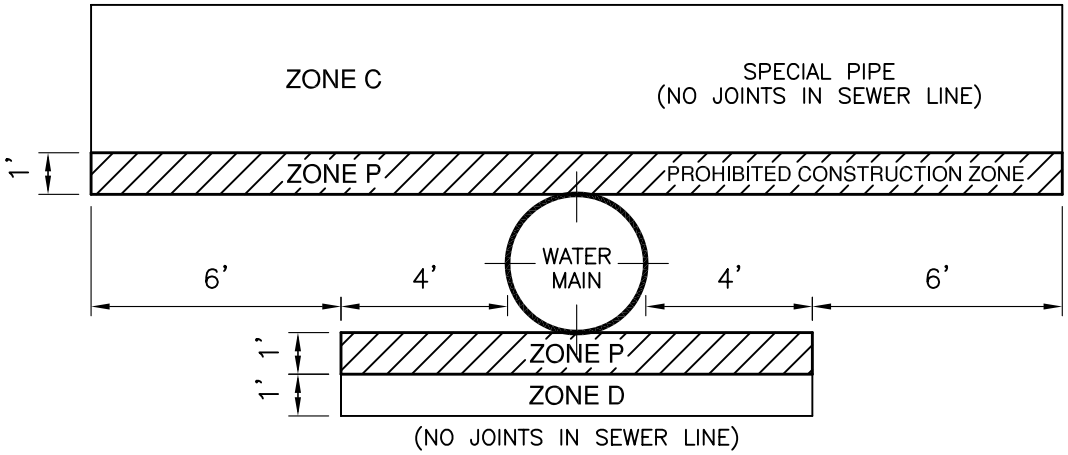

FIGURE 2 - CROSSINGS

MINIMUM SEPARATION REQUIREMENTS FOR WATER MAIN AND SEWER LINE CONSTRUCTION PER SECTION 64630, TITLE 22 (WATER MAIN INSTALLATION, CALIFORNIA ADMINISTRATIVE CODE)

WATER DISTRIBUTION & TRANSMISSION CONSTRUCTION METHODS	WATER MAIN AND SANITARY SEWER SEPARATION CASE 1

RIVERSIDE PUBLIC UTILITIES STANDARD DRAWING	DATE: OCT 2009	CWD-015-1

0	1	2	3
DRAWN WEF	DRAWN	DRAWN	DRAWN
DATE 10-09	DATE	DATE	DATE
CHECK	CHECK	CHECK	CHECK
APPROV.	APPROV.	APPROV.	APPROV.

INSTALLATION OF NEW WATER MAIN

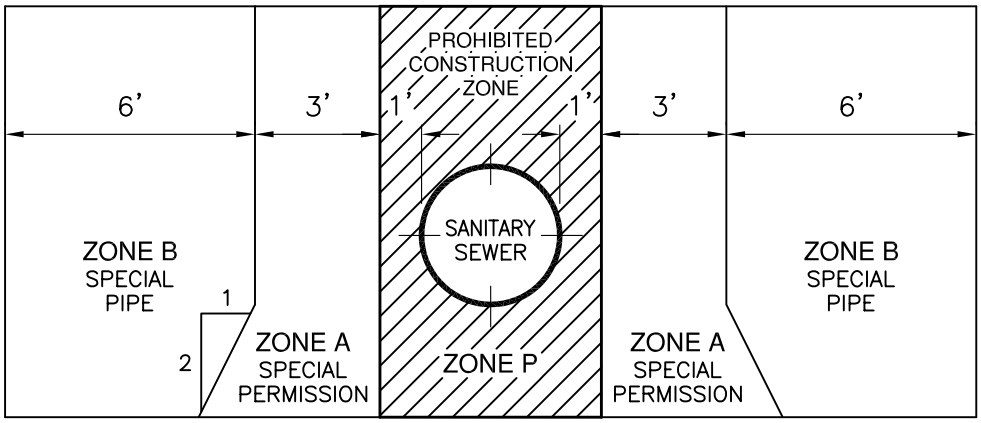

FIGURE 1 - PARALLEL CONSTRUCTION

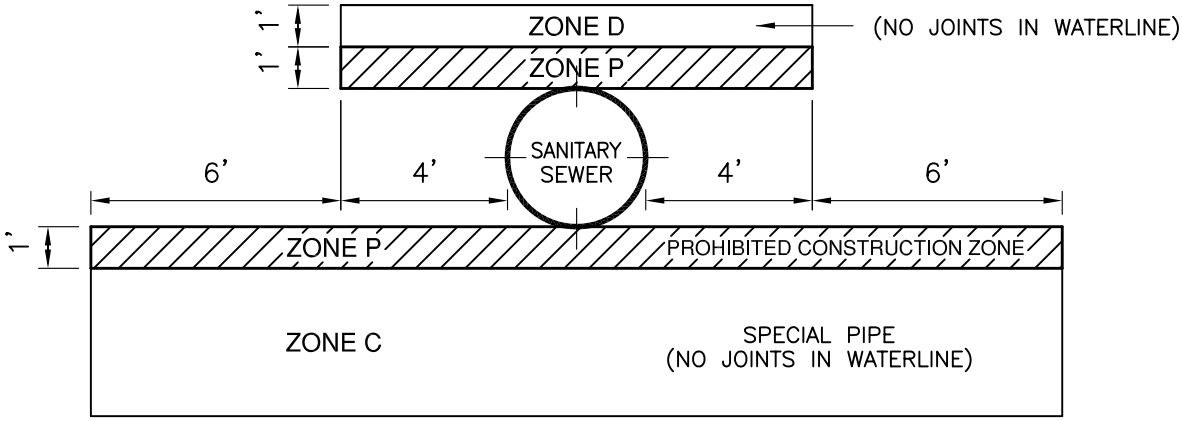

FIGURE 2 - CROSSINGS

NEW WATER MAIN - EXISTING SANITARY SEWERLINE

MINIMUM SEPARATION REQUIREMENTS FOR WATER MAIN AND SEWERLINE CONSTRUCTION PER SECTION 64572 (WATER MAIN SEPARATION, CALIFORNIA WATERWORKS STANDARDS, TITLE 22, CALIFORNIA CODE OF REGULATIONS.)

WATER DISTRIBUTION & TRANSMISSION CONSTRUCTION METHODS	WATER MAIN AND SANITARY SEWER SEPARATION CASE 2	
CITY OF RIVERSIDE PUBLIC UTILITIES STANDARD DRAWING	DATE: OCT 2009	CWD-015-2

0	DRAWN WEF	DATE 10-09	CHECK	APPROV.
1	DRAWN	DATE	CHECK	APPROV.
2	DRAWN	DATE	CHECK	APPROV.
3	DRAWN	DATE	CHECK	APPROV.

NOTES AND DEFINITIONS

1. HEALTH AGENCY -- THE DEPARTMENT OF HEALTH SERVICES. FOR THOSE WATER SYSTEMS SUPPLYING FEWER THAN 200 SERVICE CONNECTIONS, THE LOCAL HEALTH OFFICER SHALL ACT FOR THE DEPARTMENT OF HEALTH SERVICES.

2. WATER SUPPLIER -- "PERSON OPERATING A PUBLIC WATER SYSTEM" OR "SUPPLIER OF WATER" MEANS ANY PERSON WHO OWNS OR OPERATES A PUBLIC WATER SYSTEM.

3. LOW HEAD WATER MAIN -- ANY WATER MAIN WHICH HAS A PRESSURE OF FIVE PSI (POUNDS PER SQUARE INCH) OR LESS AT ANY TIME AT ANY POINT IN THE MAIN.

4. DIMENSIONS ARE FROM THE OUTSIDE OF WATER MAIN TO THE OUTSIDE OF SANITARY SEWER LINE OR MANHOLE.

5. COMPRESSION JOINT -- A PUSH-ON JOINT THAT SEALS BY MEANS OF THE COMPRESSION OF A RUBBER RING OR GASKET BETWEEN THE PIPE AND A BELL OR COUPLING.

6. MECHANICAL JOINTS -- BOLTED JOINTS.

7. RATED WORKING WATER PRESSURE OR PRESSURE CLASS -- A PIPE CLASSIFICATION SYSTEM BASED UPON INTERNAL WORKING PRESSURE OF THE FLUID IN THE PIPE, TYPE OF PIPE MATERIAL, AND THE THICKNESS OF THE PIPE WALL.

8. FUSED JOINT -- THE JOINING OF SECTOINS OF PIPE USING THERMAL OR CHEMICAL BONDING PROCESSES.

9. SLEEVE -- A PROTECTIVE TUBE OF STEEL WITH A WALL THICKNESS OF NOT LESS THAN ONE-FOURTH INCH INTO WHICH A PIPE IS INSERTED.

10. GROUND WATER -- SUBSURFACE WATER FOUND IN THE PART OF THE GROUND THAT IS WHOLLY SATURATED.

11. HOUSE LATERAL -- A SANITARY SEWER CONNECTING THE HOUSE LATERAL DRAIN, BUILDING DRAIN, AND THE MAIN SANITARY SEWERLINE.

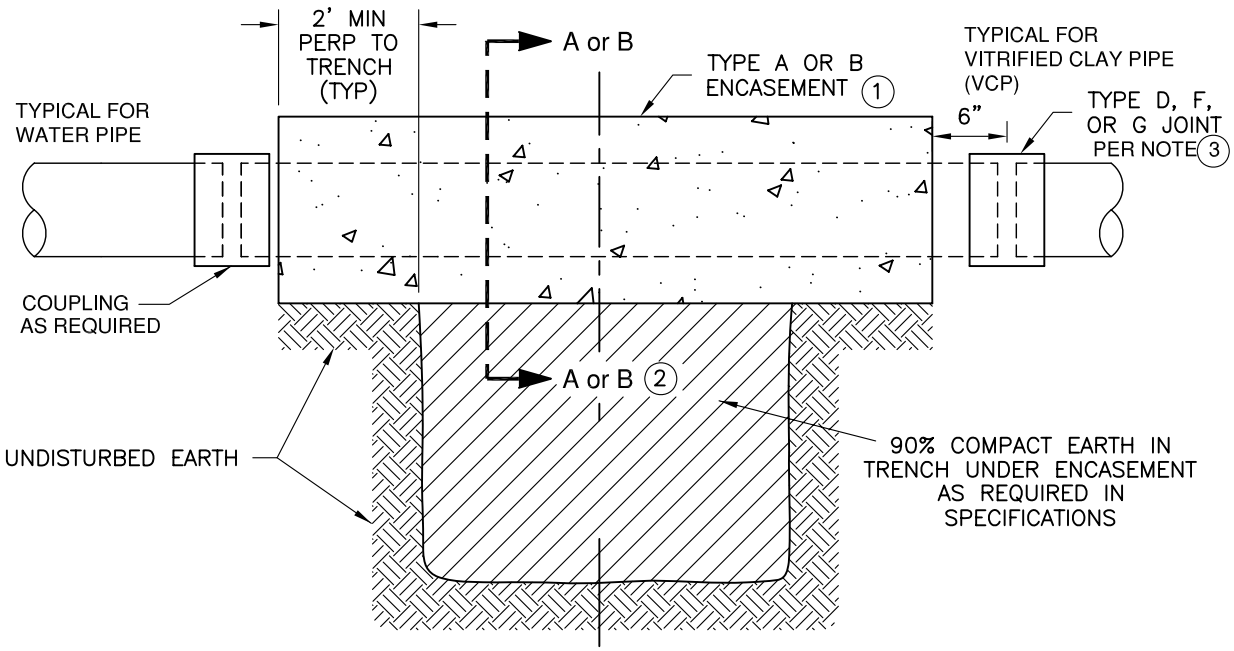

TYPE A OR B ENCASEMENT FOR WATER & SEWER

REQUIRED TO SPAN TRENCH, OR WHERE ENCASEMENT IS NOT POURED ON UNDISTURBED EARTH

NOTE:

1. EXTEND MACHINED PIPE ENDS BEYOND ENCASEMENT
2. SEE CWD-023-2 FOR CROSS-SECTION OF A, B, OR C ENCASEMENT DETAIL
3. PIPE JOINT TYPES AND MATERIALS ARE PER GREEN BOOK SECTION 208

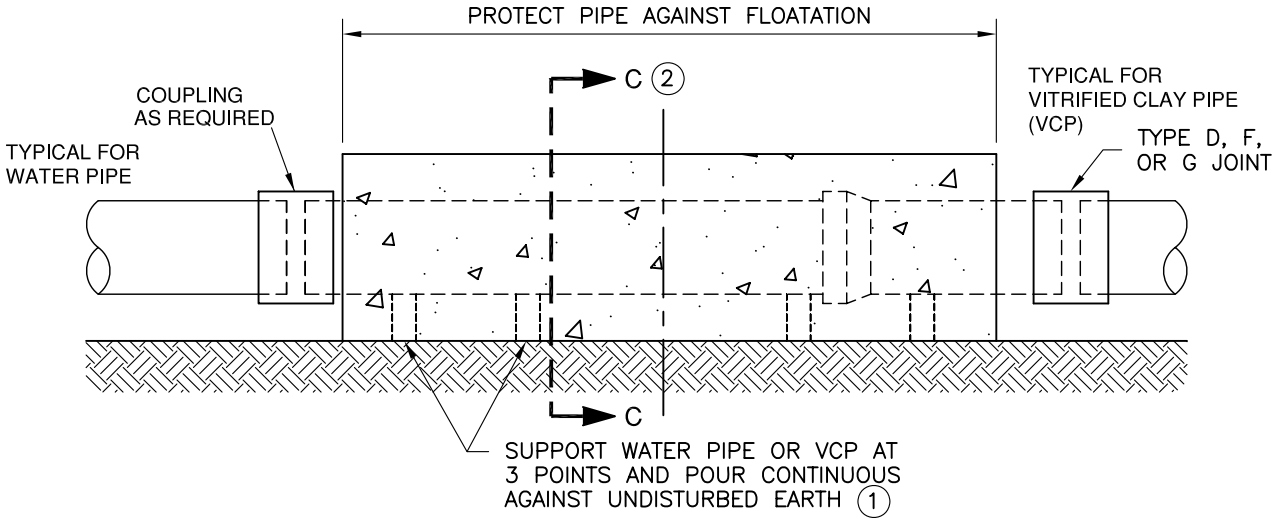

TYPE C ENCASEMENT FOR WATER & SEWER

0	DRAWN WEF	DATE 10-09	CHECK	APPROV.
1	DRAWN	DATE	CHECK	APPROV.
2	DRAWN	DATE	CHECK	APPROV.
3	DRAWN	DATE	CHECK	APPROV.

WATER
DISTRIBUTION & TRANSMISSION
CONSTRUCTION METHODS

STRUCTURE INTERFERENCE TYPE A, B, OR C ENCASEMENT

CITY OF RIVERSIDE PUBLIC UTILITIES STANDARD DRAWING | DATE: OCT 2009 | CWD-023-1

0	1	2	3
DRAWN WEF	DRAWN	DRAWN	DRAWN
DATE 10-09	DATE	DATE	DATE
CHECK	CHECK	CHECK	CHECK
APPROV.	APPROV.	APPROV.	APPROV.

OD = OUTSIDE DIAMETER OF BELL, COLLAR, OR COUPLING.

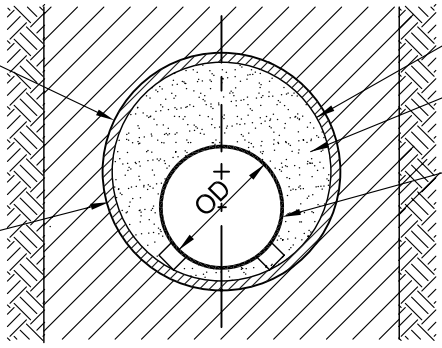

TYPE A - PIPE CASING
SECTION A

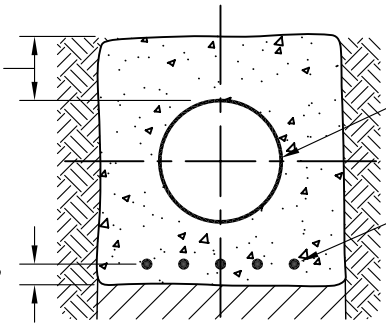

TYPE B - REINFORCED ENCASEMENT
SECTION B

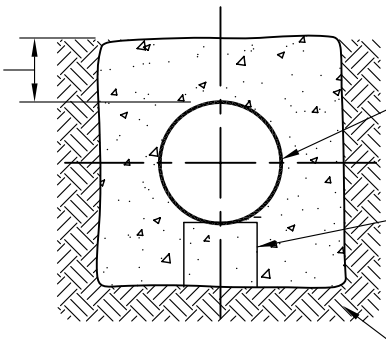

TYPE C - PLAIN ENCASEMENT
SECTION C

GENERAL NOTES

1.) ALL MATERIALS OF CONSTRUCTION SHALL CONFORM TO "STANDARD SPECIFICATIONS FOR PUBLIC WORKS CONSTRUCTION"

WATER DISTRIBUTION & TRANSMISSION CONSTRUCTION METHODS	STRUCTURE INTERFERENCE ENCASEMENT SECTIONS	
CITY OF RIVERSIDE PUBLIC UTILITIES STANDARD DRAWING	DATE: OCT 2009	CWD-023-2

	APPROV.	CHECK	DATE	DRAWN
3				
2				
1				
0			10-09	RGM

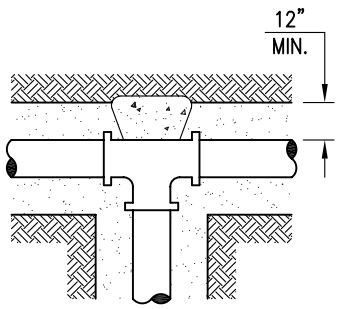

TEE

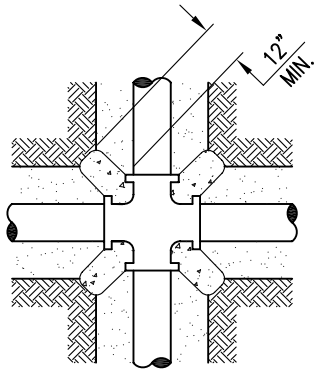

CROSS

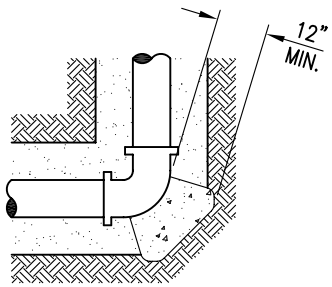

ELL

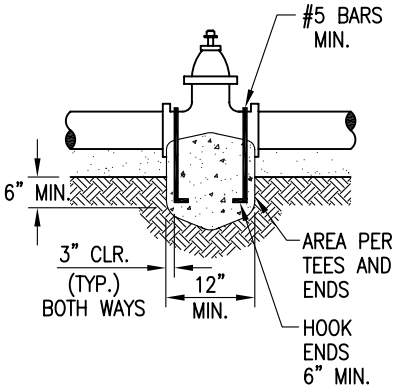

ANCHORAGE OF VALVE

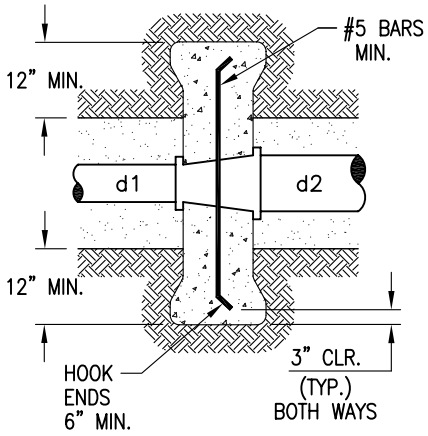

REDUCER

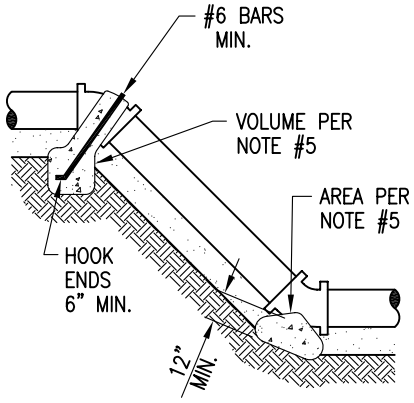

VERTICAL P.I.

GUIDELINE

NOTES:

1.) ALL MATERIALS OF CONSTRUCTION SHALL CONFORM TO "STANDARD SPECIFICATIONS FOR PUBLIC WORKS CONSTRUCTION".

2.) THRUST AND ANCHOR BLOCKS FOR D.I.P. AND M.L.&C. STEEL PIPE SHALL BE OF PCC 450-C-2000 CONCRETE AND SHALL BE POURED AGAINST UNDISTURBED SOIL. CONCRETE SHALL BE KEPT CLEAR OF THE BELL END OF FITTINGS FOR DUCTILE IRON PIPE.

3.) ENGINEERED-APPROVED RESTRAINED JOINTS MAY BE USED IN-LIEU OF THRUST BLOCKS.

4.) ANCHOR BLOCK FOR GATE VALVES SHALL BE KEYED A MINIMUM OF 12 INCHES INTO TRENCH WALL AND 6 INCHES INTO BOTTOM OF TRENCH.

5.) THE ENGINEER OF RECORD SHALL SIZE ALL THRUST BLOCKS ON THE BASIS OF THE SOIL PASSIVE PRESSURE.

WATER DISTRIBUTION & TRANSMISSION CONSTRUCTION METHODS	THRUST BLOCK DETAILS TYPICAL

RIVERSIDE PUBLIC UTILITIES STANDARD DRAWING	DATE: OCT 2009	CWD-030

0	1	2	3
DRAWN KRELL	DRAWN	DRAWN	DRAWN
DATE 10-09	DATE	DATE	DATE
CHECK	CHECK	CHECK	CHECK
APPROV.	APPROV.	APPROV.	APPROV.

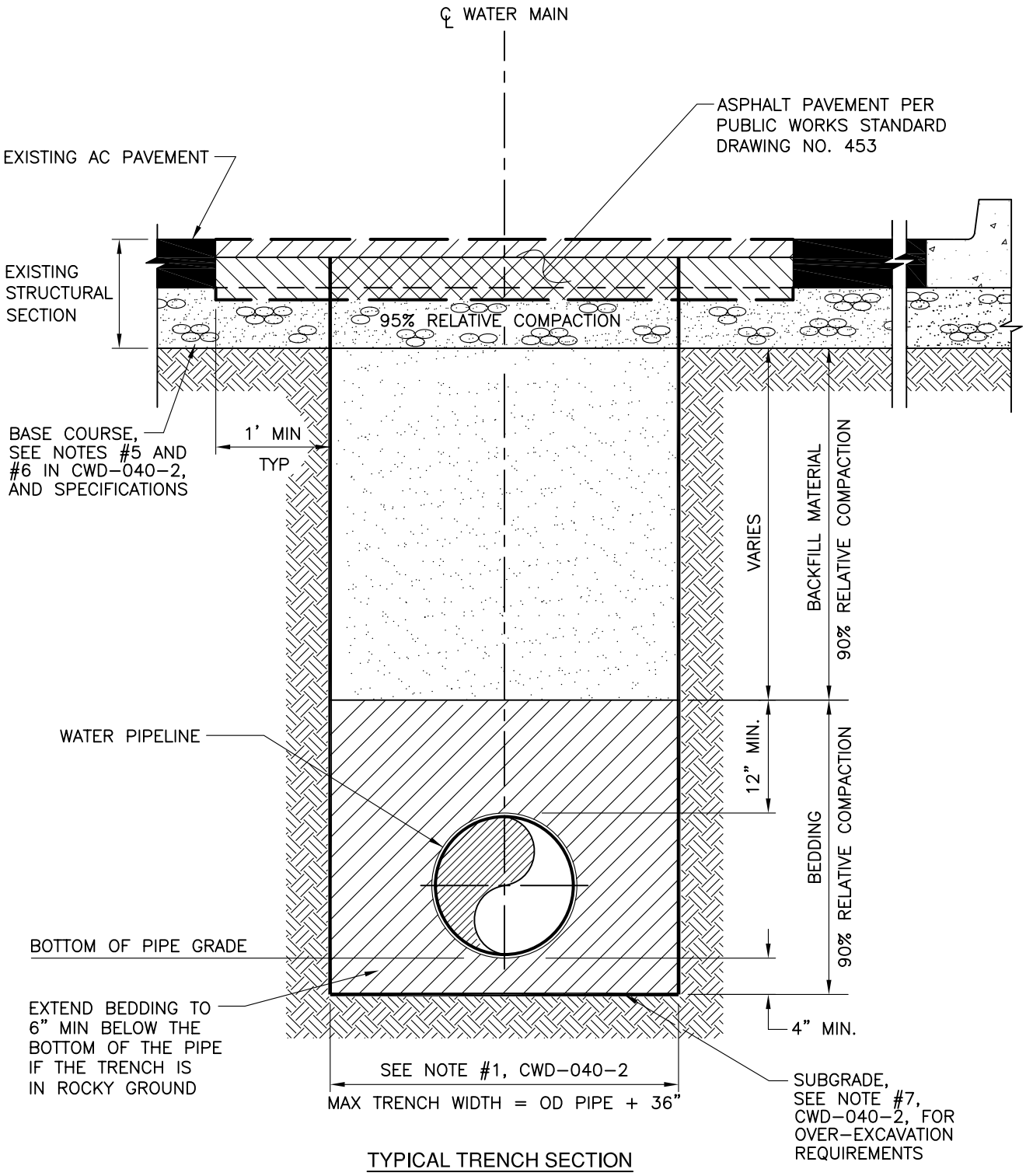

TYPICAL TRENCH SECTION

SEE CWD-040-2 FOR NOTES
PW STANDARD 453 SUPERCEDES INCASE OF ANY VARIANCE

WATER DISTRIBUTION & TRANSMISSION CONSTRUCTION METHODS	TYPICAL PIPE TRENCH, BEDDING, BACKFILL AND PAVEMENT REQUIREMENTS	
CITY OF RIVERSIDE PUBLIC UTILITIES STANDARD DRAWING	DATE: OCT 2009	CWD-040-1

0	1	2	3
DRAWN RGM	DRAWN	DRAWN	DRAWN
DATE 10-09	DATE	DATE	DATE
CHECK	CHECK	CHECK	CHECK
APPROV.	APPROV.	APPROV.	APPROV.

GENERAL NOTES:

1.) MINIMUM TRENCH WIDTH = O.D. + 12" FOR 4" TO 12" NOMINAL DIAMETER PIPE AND O.D. + 18" FOR GREATER THAN 12" NOMINAL DIAMETER PIPE.

2.) THE MATERIAL FOR BEDDING SHALL BE COHESIONLESS SANDY LOAM, SAND, OR SANDY GRAVEL MATERIAL OBTAINED FROM PROJECT EXCAVATION OR FROM APPROVED BORROW AREAS. THE BEDDING MATERIAL SHALL NOT CONTAIN ANY ROCKS OR OTHER MATERIAL DELETERIOUS TO THE PIPE.

3.) SAND BEDDING SHALL BE USED WHEN THE SAND EQUIVALENT OF THE NATIVE MATERIAL IS LESS THAN 30, PER ASTM D2419.

4.) FOR PAVED AND UNPAVED AREAS, THE COMPACTION OF BEDDING AND BACKFILL MATERIALS AND PAVEMENT REPLACEMENT SHALL BE IN ACCORDANCE WITH THE STANDARD SPECIFICATIONS FOR PUBLIC WORKS CONSTRUCTION "GREEN BOOK" LATEST EDITION.

5.) COMPACTED BACKFILL MATERIAL IN THE UNPAVED AREAS SHALL COMPLY WITH THE SAME REQUIREMENTS AS THE BACKFILL MATERIAL COMPACTION IN THE STREETS.

6.) THE BASE COURSE MATERIAL SHALL BE CRUSHED AGGREGATE BASE MATERIAL AS SPECIFIED IN SECTION 200-2 "UNTREATED BASE MATERIALS" OF THE STANDARD SPECIFICATIONS FOR PUBLIC WORKS CONSTRUCTION, LATEST EDITION.

7.) IF THE ENGINEER DETERMINES THAT THE SOIL UPON WHICH THE PIPE IS TO BE PLACED IS UNSTABLE, THE CONTRACTOR SHALL OVER-EXCAVATE THE BOTTOM OF THE TRENCH TO A DEPTH OF 12" OR AS DIRECTED BY THE ENGINEER AND PLACE A LAYER OF CRUSHED ROCK ON THE TRENCH SUBGRADE COMPACTED TO 90% RELATIVE COMPACTION.

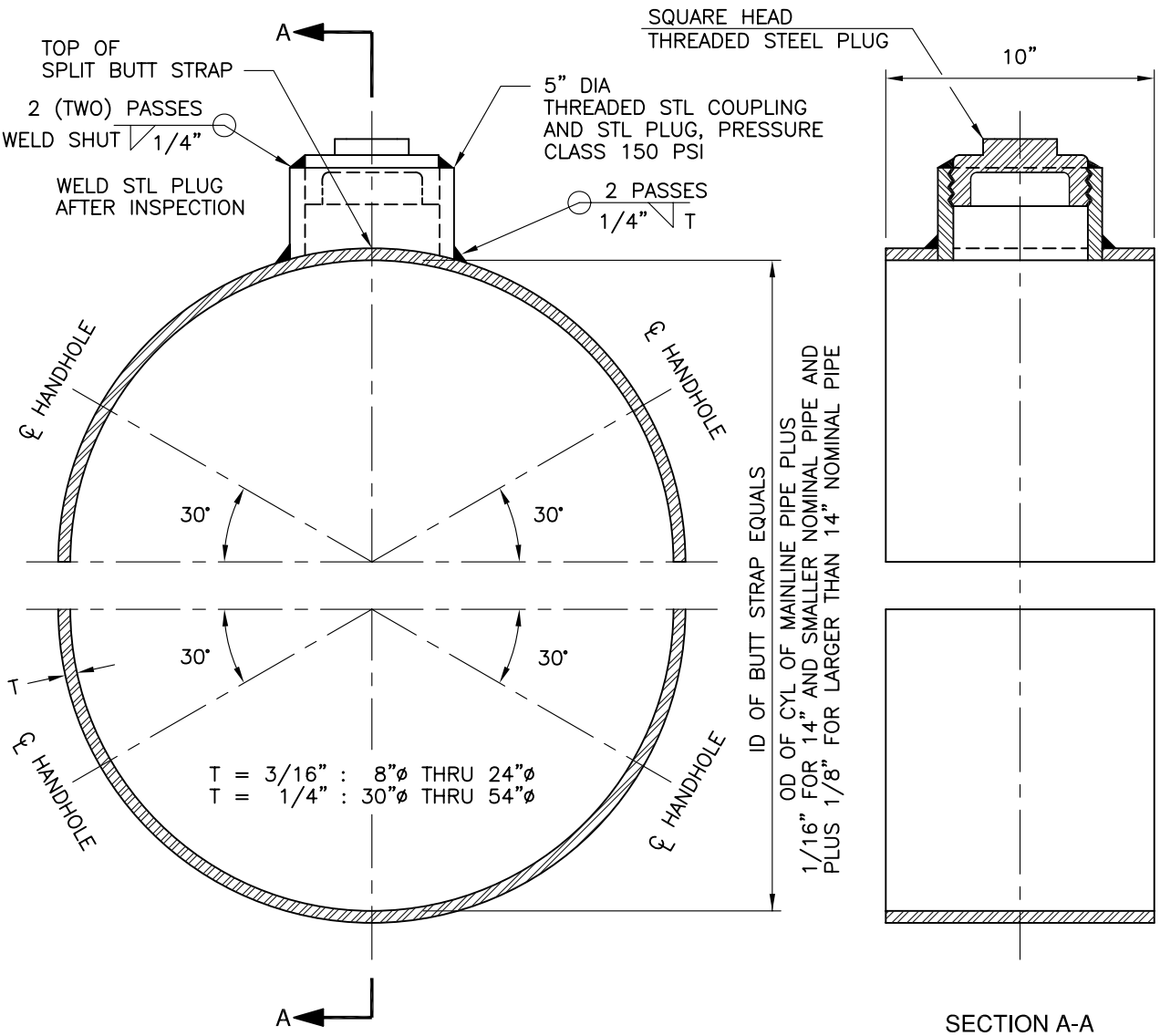

SECTIONAL DETAIL OF SPLIT BUTT STRAP

SECTION A-A

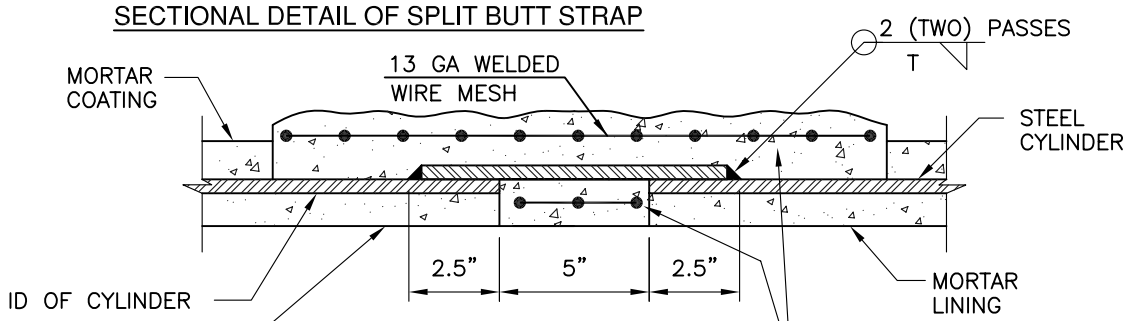

FIELD WELDED CLOSURE

FIELD–APPLY STIFF CLASS C CEMENT MORTAR COATING, PER "STANDARD SPECIFICATIONS FOR PUBLIC WORKS CONSTRUCTION" SEC 201–5 REINFORCED WITH 2" x 4" x 13 GA WELDED WIRE MESH

NOTES: 1.) SHIP IN HALVES AND WELD IN FIELD

2.)

PIPE SIZE	HANDHOLES
8" THROUGH 12"	1
14" THROUGH 18"	2
20" THROUGH 36"	4
42" THROUGH 54"	6

NOTE:

1. AFTER THE ASSEMBLY, ALL BARE METAL TO HAVE SAME COATING APPLIED AS IS ON THE PIPE.
2. ALL WELDS ARE FULL DOUBLE PASS WELDS.

0	DRAWN MMc	DATE 10–'09	CHECK
1	DRAWN	DATE	CHECK	APPROV.
2	DRAWN	DATE	CHECK	APPROV.
3	DRAWN	DATE	CHECK	APPROV.

WATER
DISTRIBUTION & TRANSMISSION
CONSTRUCTION METHODS

TYPICAL SPLIT BUTT STRAP 8" THROUGH 54" DIAMETER (150 PSI DESIGN PRESSURE)

CITY OF RIVERSIDE PUBLIC UTILITIES STANDARD DRAWING | DATE: OCT 2009 | CWD-220

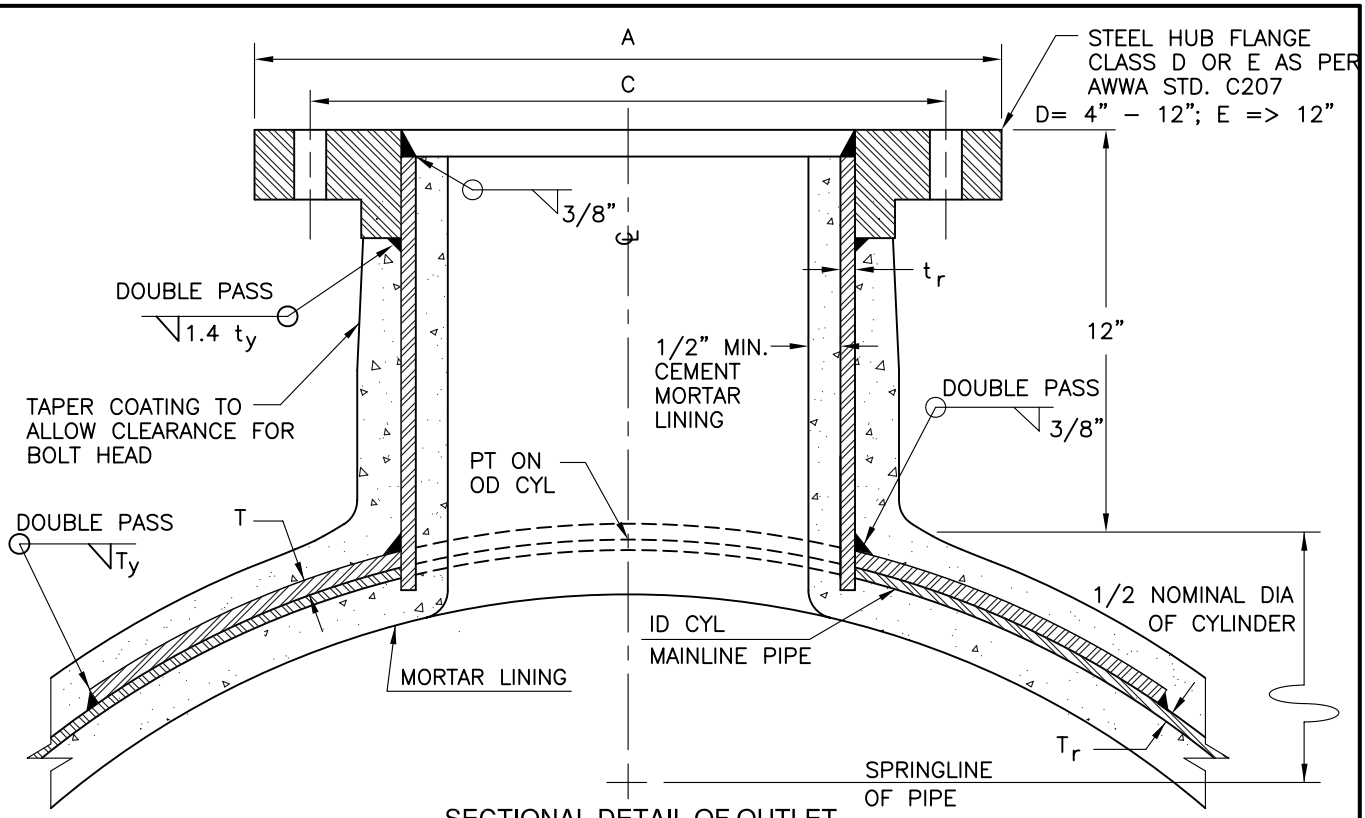

SECTIONAL DETAIL OF OUTLET

NOTE: ALL WELDS ARE FULL DOUBLE PASS WELDS.

NOMINAL OUTLET DIA (in.)	MINIMUM "t_r" (in.)	HUB FLANGE	
		"C" (in.)	A (in.)
4	0.237	7 1/2	9
6	0.280	9 1/2	11
8	0.322	11 3/4	13 1/2
10	0.366	14 1/4	16
12	0.375	17	19
14	0.375	18 3/4	21
16	0.375	21 1/4	23 1/2
18	0.375	22 3/4	25
20	0.375	25	27 1/2

NOTES:

1.) SEE MAINLINE PIPING DRAWING FOR POSITON AND USE OF OUTLET.
2.) STEEL HUB FLANGE CLASS D, OR E AS PER AWWA STD C207– SEE ABOVE.
3.) SEE MAINLINE PIPE DRAWING FOR MINIMUM DESIGN THICKNESS "T_r".
4.) "w" AND "T", REINFORCEMENT PLATE DIMENSIONS FOR OUTLET JOINTS, TO BE DESIGNED PER AWWA M11, OR EQUAL TO MANUFACTRERS REINFORCING GUIDE.
5.) "T_y" = MAINLINE CYLINDER THICKNESS.
6.) "T_r" = REQUIRED MAINLINE CYLINDER THICKNESS.
7.) "t_y" = BRANCH CYLINDER THICKNESS.
8.) "t_r" = REQUIRED BRANCH CYLINDER THICKNESS.

3	DRAWN	DATE	CHECK	APPROV.
2	DRAWN	DATE	CHECK	APPROV.
1	DRAWN	DATE	CHECK	APPROV.
0	DRAWN WEF	DATE 10–09	CHECK	APPROV.

WATER
DISTRIBUTION & TRANSMISSION
CONSTRUCTION METHODS

TYPICAL FLANGED OUTLET 4" THROUGH 20"

CITY OF RIVERSIDE PUBLIC UTILITIES STANDARD DRAWING | DATE: OCT 2009 | CWD-300

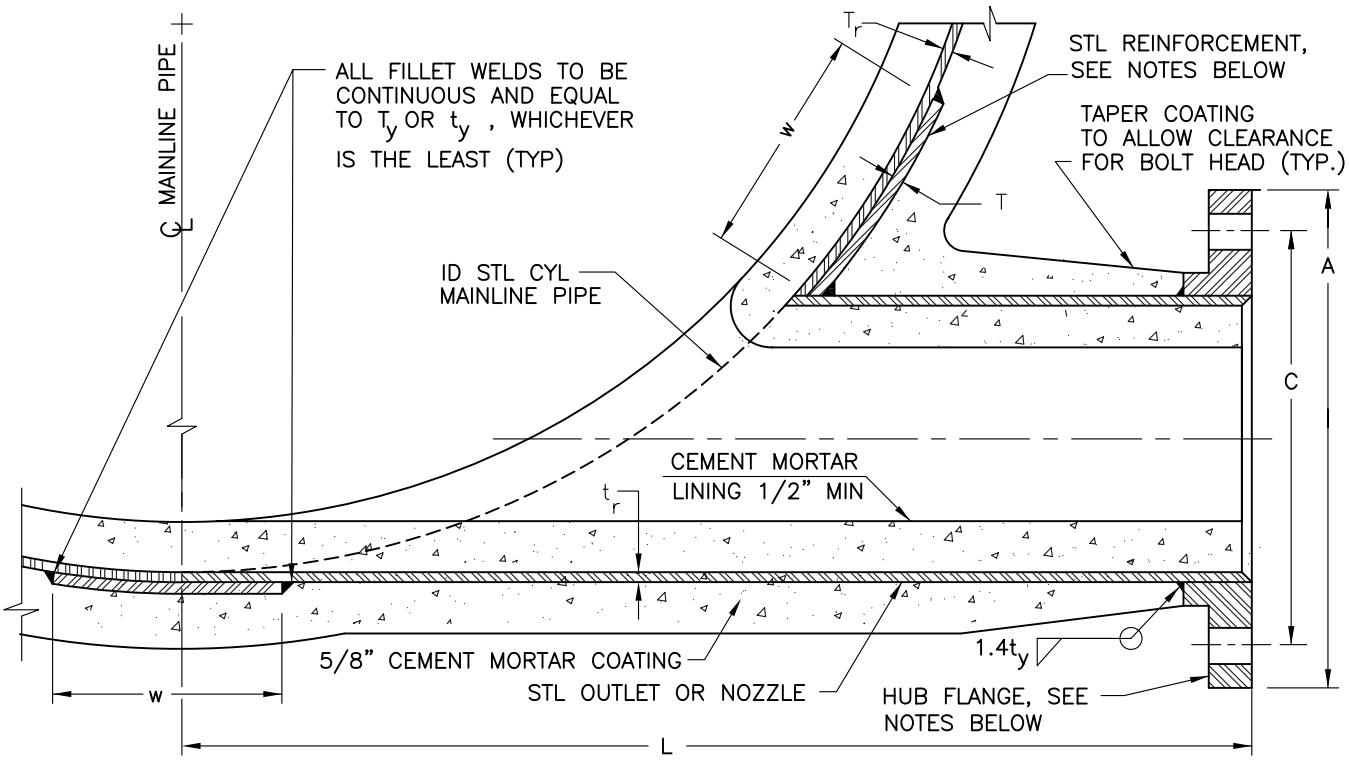

SECTIONAL DETAIL OF OUTLET

NOMINAL OUTLET DIA (in)	MINIMUM "t_r" (in)	HUB FLANGE	
		"C" (in)	"A" (in)
4	0.237	7 1/2	9
6	0.280	9 1/2	11
8	0.322	11 3/4	13 1/2
10	0.366	14 1/4	16
12	0.375	17	19

NOTES:

1.) SEE MAINLINE PIPING DRAWING FOR POSITION AND USE OF OUTLET.

2.) STEEL HUB FLANGE CLASS D AS PER AWWA STD. C207–86.

3.) SEE MAINLINE PIPING DRAWING FOR MINIMUM DESIGN THICKNESS "T_r".

4.) "w" AND "T", REINFORCEMENT PLATE DIMENSIONS FOR OUTLET JOINTS, TO BE DESIGNED PER AWWA MII, 13.3–13.6, OR EQUAL TO MANUFACTURERS REINFORCING GUIDE.

5.) "T_y"= MAINLINE CYLINDER THICKNESS.

6.) "T_r"= REQUIRED MAINLINE CYLINDER THICKNESS.

7.) "t_y"= BRANCH CYLINDER THICKNESS.

8.) "t_r"= REQUIRED BRANCH CYLINDER THICKNESS.

9.) "L" = $\frac{\text{NOMINAL DIA}}{2}$ + 12"

0	DRAWN WEF	DATE 10–09	CHECK	APPROV.
1	DRAWN	DATE	CHECK	APPROV.
2	DRAWN	DATE	CHECK	APPROV.
3	DRAWN	DATE	CHECK	APPROV.

WATER
DISTRIBUTION & TRANSMISSION
CONSTRUCTION METHODS

TYPICAL FLANGED TANGENT OUTLET 4" THROUGH 12" DIAMETER

CITY OF RIVERSIDE PUBLIC UTILITIES STANDARD DRAWING | DATE: OCT 2009 | CWD-320

0	1	2	3
DRAWN WEF	DRAWN	DRAWN	DRAWN
DATE 10-09	DATE	DATE	DATE
CHECK	CHECK	CHECK	CHECK
APPROV.	APPROV.	APPROV.	APPROV.

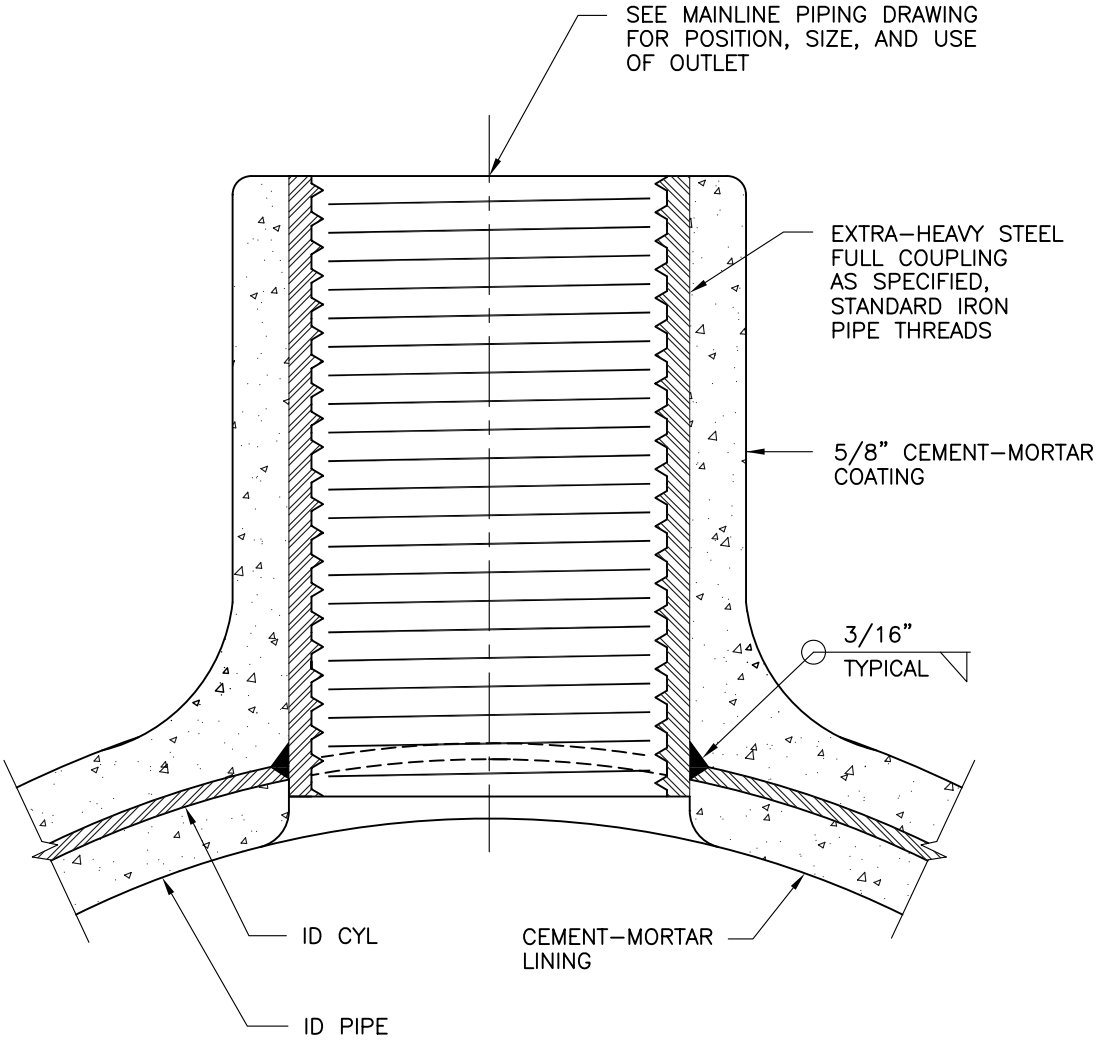

CROSS-SECTION OF OUTLET

WATER
DISTRIBUTION & TRANSMISSION
CONSTRUCTION METHODS

TYPICAL THREADED OUTLET 1" THRU 2 1/2" DIAMETER

CITY OF RIVERSIDE PUBLIC UTILITIES STANDARD DRAWING | DATE: OCT 2009 | CWD-340

0	DRAWN	DATE	CHECK	APPROV.	1	DRAWN	DATE	CHECK	APPROV.	2	DRAWN	DATE	CHECK	APPROV.	3	DRAWN	DATE	CHECK	APPROV.
	WEF	10–09																	

CITY OF RIVERSIDE PUBLIC UTILITIES STANDARD DRAWING

WATER
DISTRIBUTION & TRANSMISSION
CONSTRUCTION METHODS

TYPICAL MANWAY FOR LARGE PIPELINES

DATE: OCT 2009

CWD-350

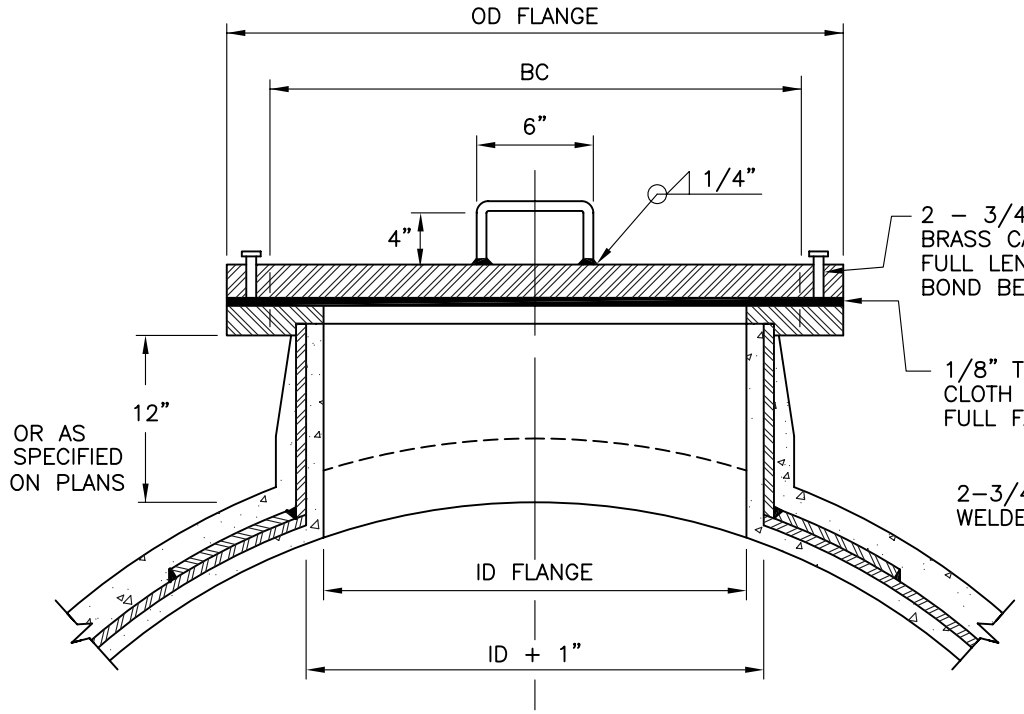

CROSS-SECTION OF MANWAY A-A

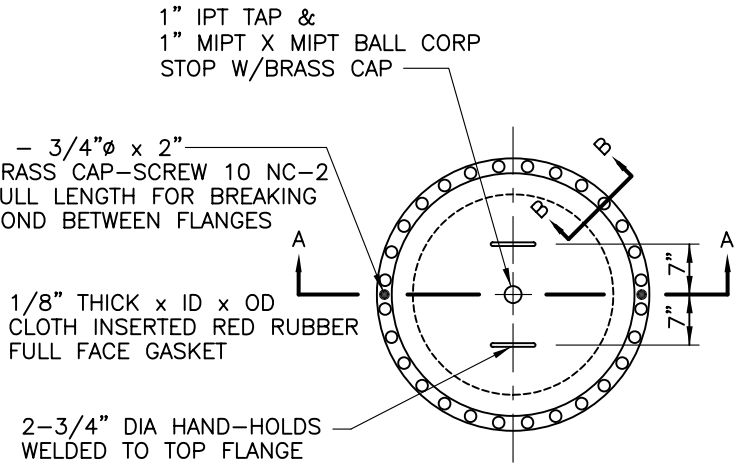

TOP VIEW OF MANWAY LID

NOTES:

1.) PAINT ALL EXPOSED INTERIOR & EXTERIOR METAL SURFACES OF FLANGES, EXCEPT GASKET SURFACE, PER SPECIFICATIONS.

2.) 150 LB. HUB FLANGES SHALL BE USED IF WORKING PRESSURE 175 PSI OR LESS, 300 LB. FLANGES SHALL BE USED IF WORKING PRESSURE OVER 175 PSI.

3.) REINFORCE MANWAY IN ACCORDANCE WITH AWWA M11 OR EQUAL, MANUFACTURER'S REINFORCING GUIDE.

4.) MANWAY STATIONS MAY BE VARIED IN ORDER TO LOCATE THE 24" DIA OPENING @ MIDPOINT IN INDIVIDUAL PIPE LENGTHS THUS PERMITTING THE MANUFACTURE OF A UNIVERSAL PIPE LENGTH.

5.) PAINT UNDERSIDE OF BLIND FLANGE WITH EPOXY PER SPECIFICATIONS.

6.) REINFORCEMENT PLATE DIMENSIONS FOR OUTLET JOINTS, TO BE DESIGNED PER AWWA M11, 13.3 – 13.6, OR EQUAL TO MANUFACTURERS R/F GUIDE.

ID	FLANGE OD	BC	T	BOLT DIA	NO. BOLTS	PIPE SIZE
24"	32"	29 1/2"	1 1/4"	1 1/4"	20	24" TO 30"
30"	38 3/4"	36"	1 3/8"	1 1/4"	28	36" & LARGER

HEX HEAD NUTS AND BOLTS IN ACCORDANCE WITH THE SPECIFICATIONS.

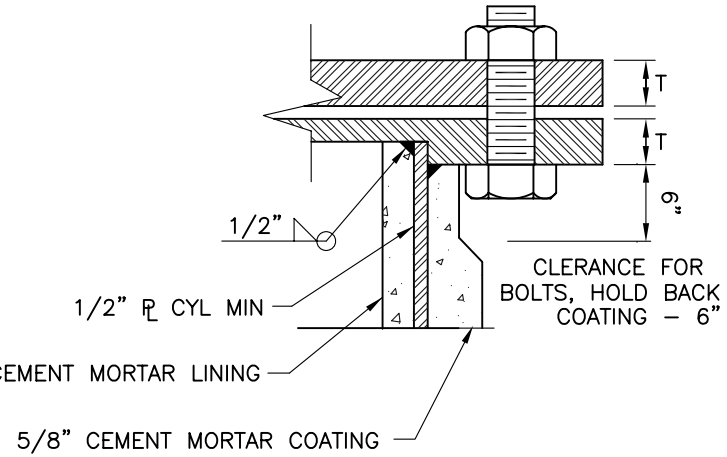

CROSS SECTION OF BOLT ASSEMBLY B-B

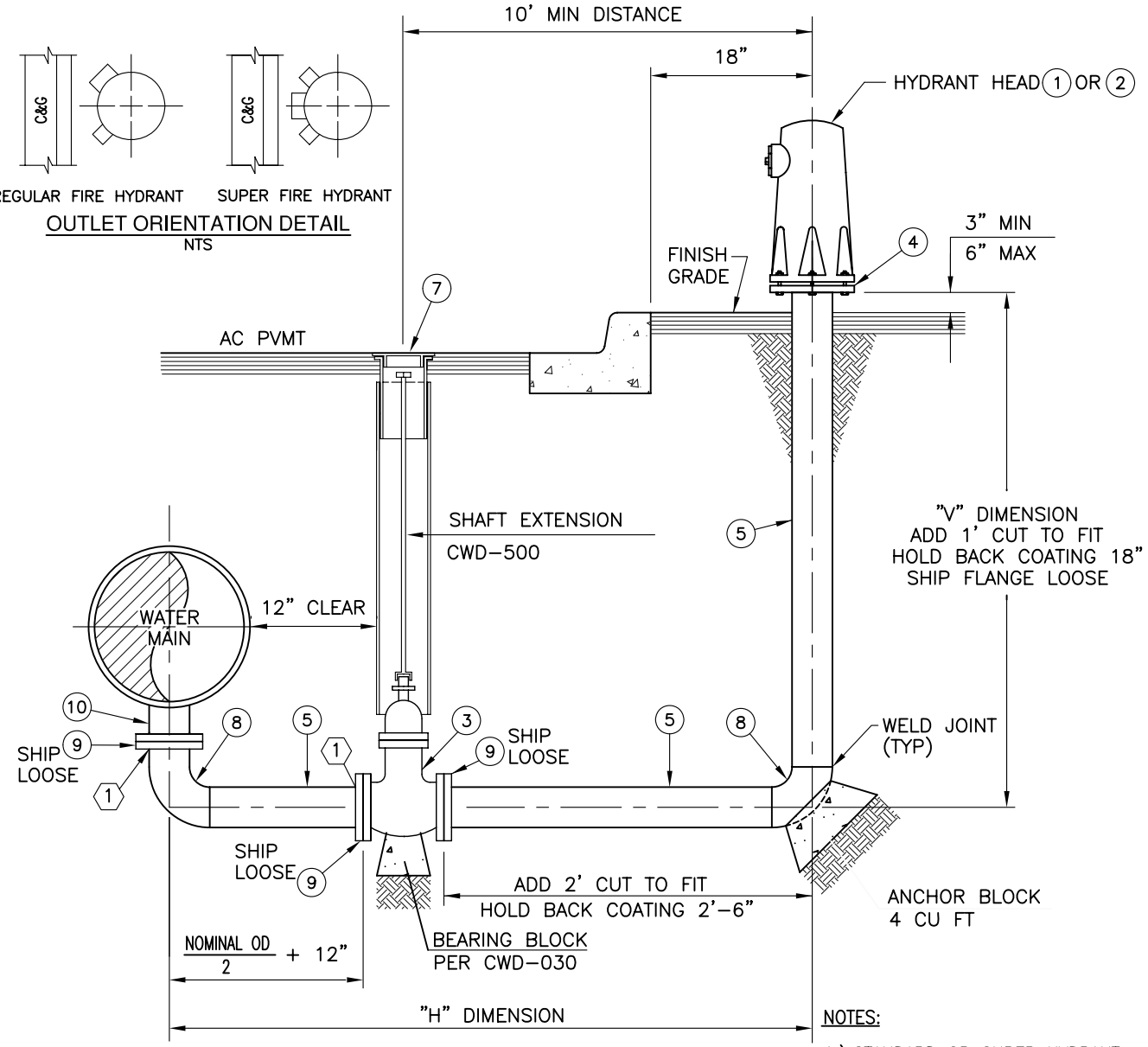

BILL OF MATERIALS– VARIES		
ITEM	QUANTITY	REFERENCE
(1) STANDARD HYDRANT : 1– 2 1/2", 1– 4"	1	CWD–700
(2) SUPER HYDRANT : 2 – 2 1/2", 1 – 4"	1	CWD–700
(3) 6" FLANGED RW GATE VALVE	1	CWD–500
(4) 6" SLIP–ON WELD FLANGE (6–HOLE)	1	
(5) 6" ML&C STEEL PIPE 10 GA, 6 5/8" OD 1/2 CML, 3/4" CMC	1	
(7) 8" GATE BOX CAP, GALV SPLIT–SLEEVE, AND 12 GA STL PIPE	1	CWD–515
(8) 6" 90° ELL	2	
(9) 6" FLANGE	3	
(10) 6" FLANGED OUTLET	1	CWD–300

NOTES:

1.) STANDARD OR SUPER HYDRANT PER PLANS AND SPECIFICATIONS.

2.) BREAK–OFF BOLTS REQUIRED BETWEEN HYDRANT AND FLANGE PER SPECIFICATION.

3.) HYDRANT OUTLETS SHALL FACE STREET.

4.) TOP OF HYDRANT BLOW–OFF TO BE PAINTED BLUE #315–15 BY FULLER O'BRIEN CO. OR DEPARTMENT APPROVED EQUAL.

5.) WELD ALL JOINTS.

6.) "H" AND "V" DIMENSION AS SHOWN ON PLANS

(1) HOLD BACK COATING 6"

3	DRAWN	DATE	CHECK	APPROV.
2	DRAWN	DATE	CHECK	APPROV.
1	DRAWN	DATE	CHECK	APPROV.
0	DRAWN MMc	DATE 10–'09	CHECK	APPROV.

WATER
DISTRIBUTION & TRANSMISSION
CONSTRUCTION METHODS

6" HYDRANT HEAD BLOW-OFF ML&C STEEL BURY 24" MAIN AND SMALLER

CITY OF RIVERSIDE PUBLIC UTILITIES STANDARD DRAWING | DATE: OCT 2009 | CWD-408

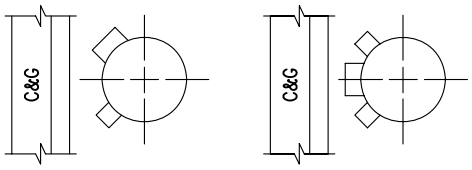

REGULAR FIRE HYDRANT SUPER FIRE HYDRANT

OUTLET ORIENTATION DETAIL

NTS

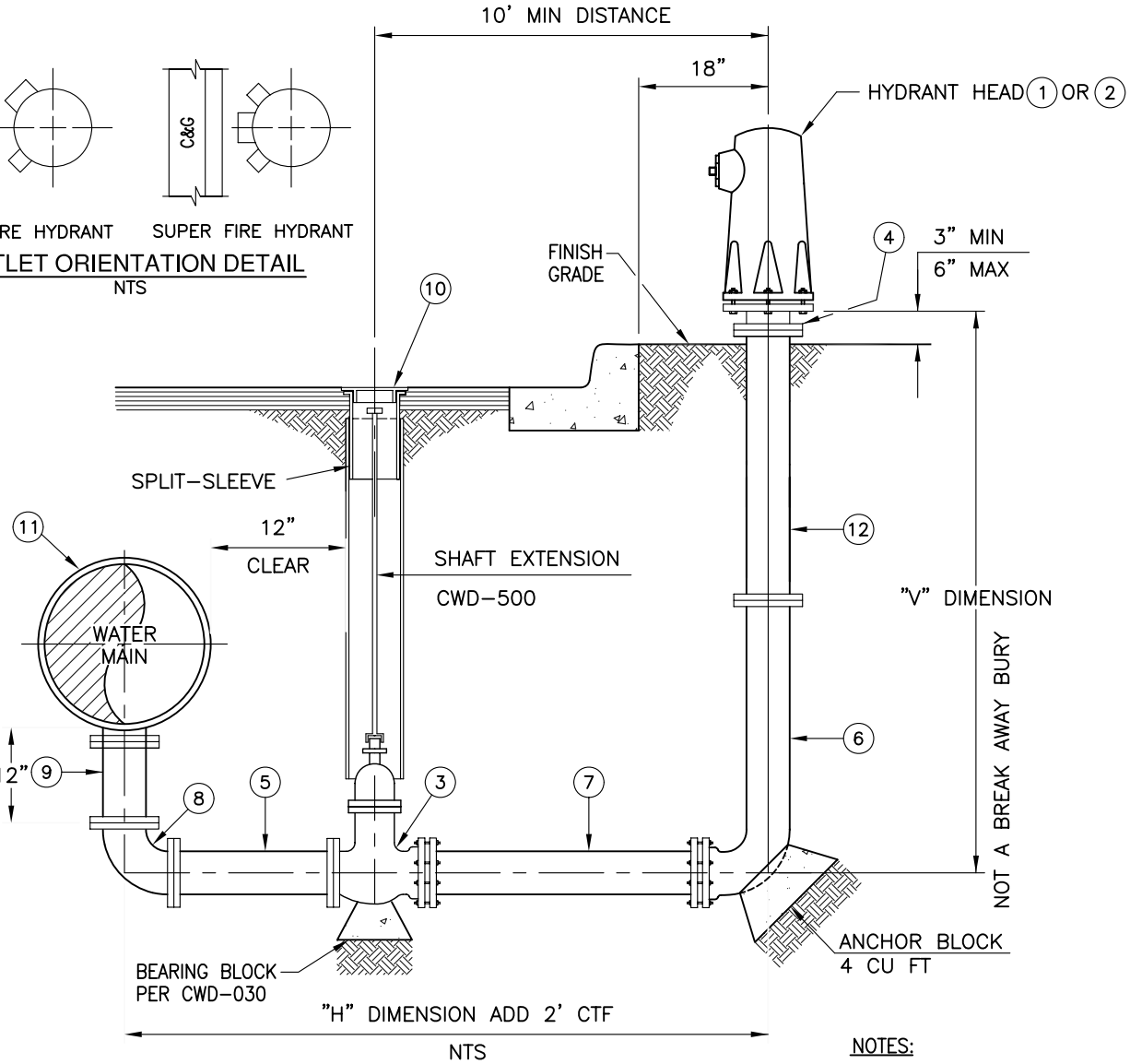

BILL OF MATERIALS		
ITEM	QUANTITY	REFERENCE
(1) STANDARD HYDRANT : 1 – 2 1/2 ", 1 – 4"	1	CWD–700
(2) SUPER HYDRANT : 2 – 2 1/2", 1 – 4"	1	CWD–700
(3) 6" FLG x MJ RW GATE VALVE	1	CWD–500
(4) 6" x 4" FLANGED ADAPTER, 8 HOLE TO 6 HOLE	1	
(5) 6" x 18" DI SPOOL FLG x FLG AS REQUIRED		
(6) 6" x 48" DI BURY FLG x MJ	1	
(7) 6" DI PIPE AS REQUIRED (W/RESTRAINED MJ ADAPTORS)		
(8) 6" DI FLANGED 90° ELL (LONG RADIUS)	1	
(9) 6" x 12" DI SPOOL FLG x FLG AS REQUIRED		
(10) 8" GATE BOX CAP, GALV SPLIT–SLEEVE, 12 GA STL PIPE	1	CWD–515
(11) 6" FLANGED TEE; MAINLINE X 6" TEE W/FL	1	
(12) 6" X REQIRED DI PIPE FL X FL W/ APPROVED	2	
RESTRAINT SYSTEM FLANGE ADAPTOR		

NOTES:

1.) STANDARD OR SUPER HYDRANT PER PLANS AND SPECIFICATIONS.

2.) BREAK–OFF BOLTS REQUIRED BETWEEN HYDRANT AND FLANGE. INSTALL PER SPECIFICATIONS.

3.) HYDRANT HEAD OUTLETS SHALL FACE STREET.

4.) TOP OF HYDRANT HEAD BLOW–OFF TO BE PAINTED BLUE #315–15 BY FULLER O'BRIEN CO. OR DEPARTMENT APPROVED EQUAL.

5.) "H" AND "V" DIMENSION AS SHOWN ON PLAN.

6.) BREAKAWAY SPOOLS OR BURY ARE NOT ALLOWED.

3	DRAWN	DATE	CHECK	APPROV.
2	DRAWN	DATE	CHECK	APPROV.
1	DRAWN	DATE	CHECK	APPROV.
0	DRAWN MMc	DATE 10–'09	CHECK	APPROV.

WATER
DISTRIBUTION & TRANSMISSION
CONSTRUCTION METHODS

6" HYDRANT HEAD BLOW-OFF DI BURY 24" MAIN AND SMALLER

CITY OF RIVERSIDE PUBLIC UTILITIES STANDARD DRAWING | DATE: OCT 2009 | CWD-409

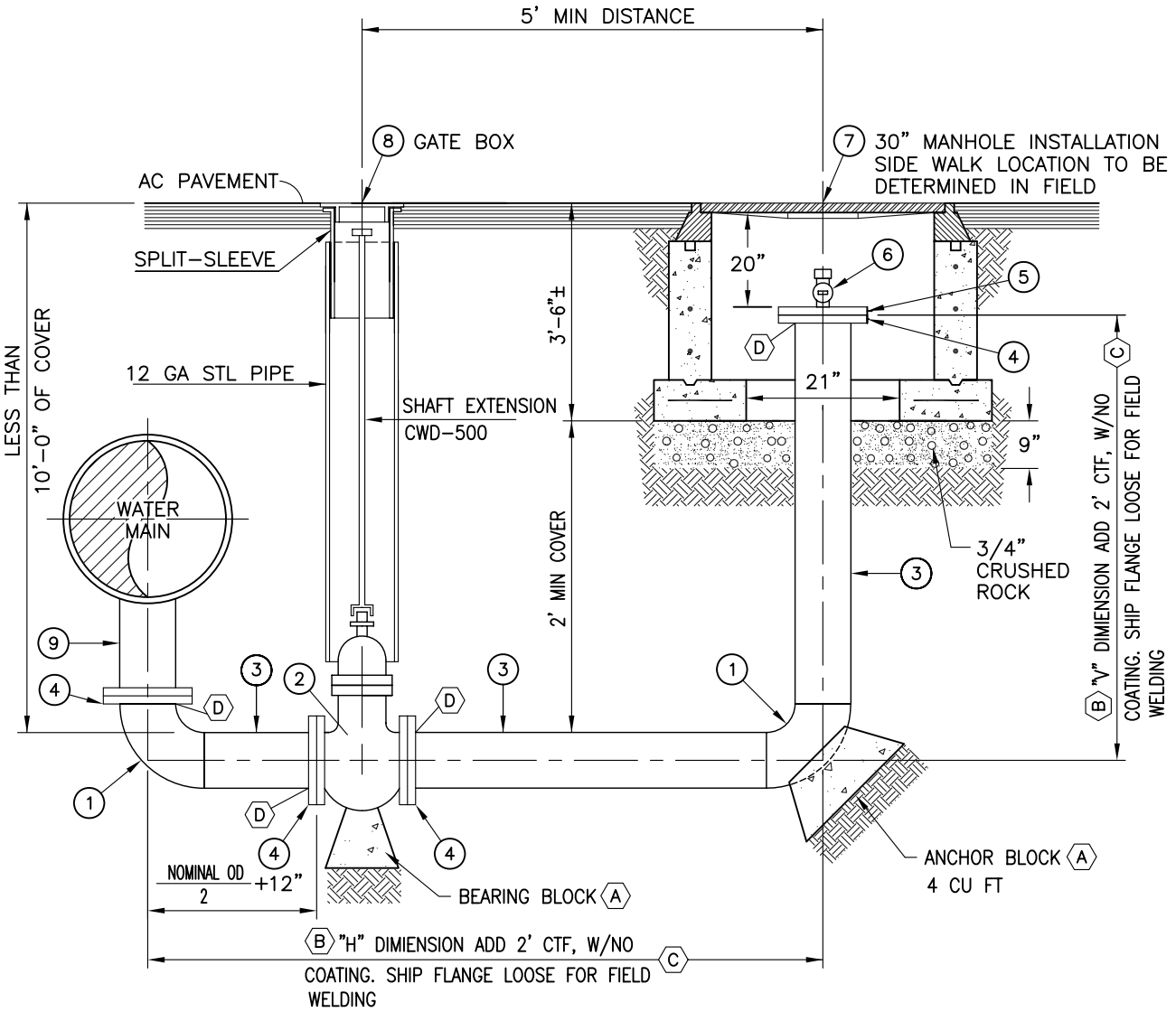

BILL OF MATERIALS		
ITEM	QUANTITY	REFERENCE
1 8" 90° ELL	2	
2 8" FLANGED RW GATE VALVE	1	CWD-500
3 8" ML&C STL PIPE 10 GA, 8 5/8" OD 1/2" CML, 3/4" CMC	VARIES	
4 8" SLIP-ON WELDED FLANGE	4	
5 8" BLIND FLANGE W/ 1" IPT TAP	1	
6 1" MIPT X MIPT BALL CORP STOP & 1" BRASS CAP	1	
7 30" MANHOLE COVER & RIM 30" ID CONC MANHOLE SECTION	VARIES	CWD-811
8 8" GATE BOX CAP, GALV SPLIT-SLEEVE, AND 12 GA STL PIPE	VARIES	CWD-515
9 8" FLANGED OUTLET	1	CWD-300

NOTES:

A ANCHOR AND BEARING BLOCKS PER CWD-030

B STATION, LOCATION, AND SPECIAL NOTES PER PLAN AND PROFILE SHEETS

C WELD ALL PIPE JOINTS 360°

D HOLD BACK COATING 6"

3	DRAWN	DATE	CHECK	APPROV.
2	DRAWN	DATE	CHECK	APPROV.
1	DRAWN	DATE	CHECK	APPROV.
0	DRAWN WEF	DATE 10-09	CHECK	APPROV.

WATER
DISTRIBUTION & TRANSMISSION
CONSTRUCTION METHODS

8" BLOW-OFF BELOW GRADE WITH LESS THAN 10' OF COVER

CITY OF RIVERSIDE PUBLIC UTILITIES STANDARD DRAWING | DATE: OCT 2009 | CWD-410-A

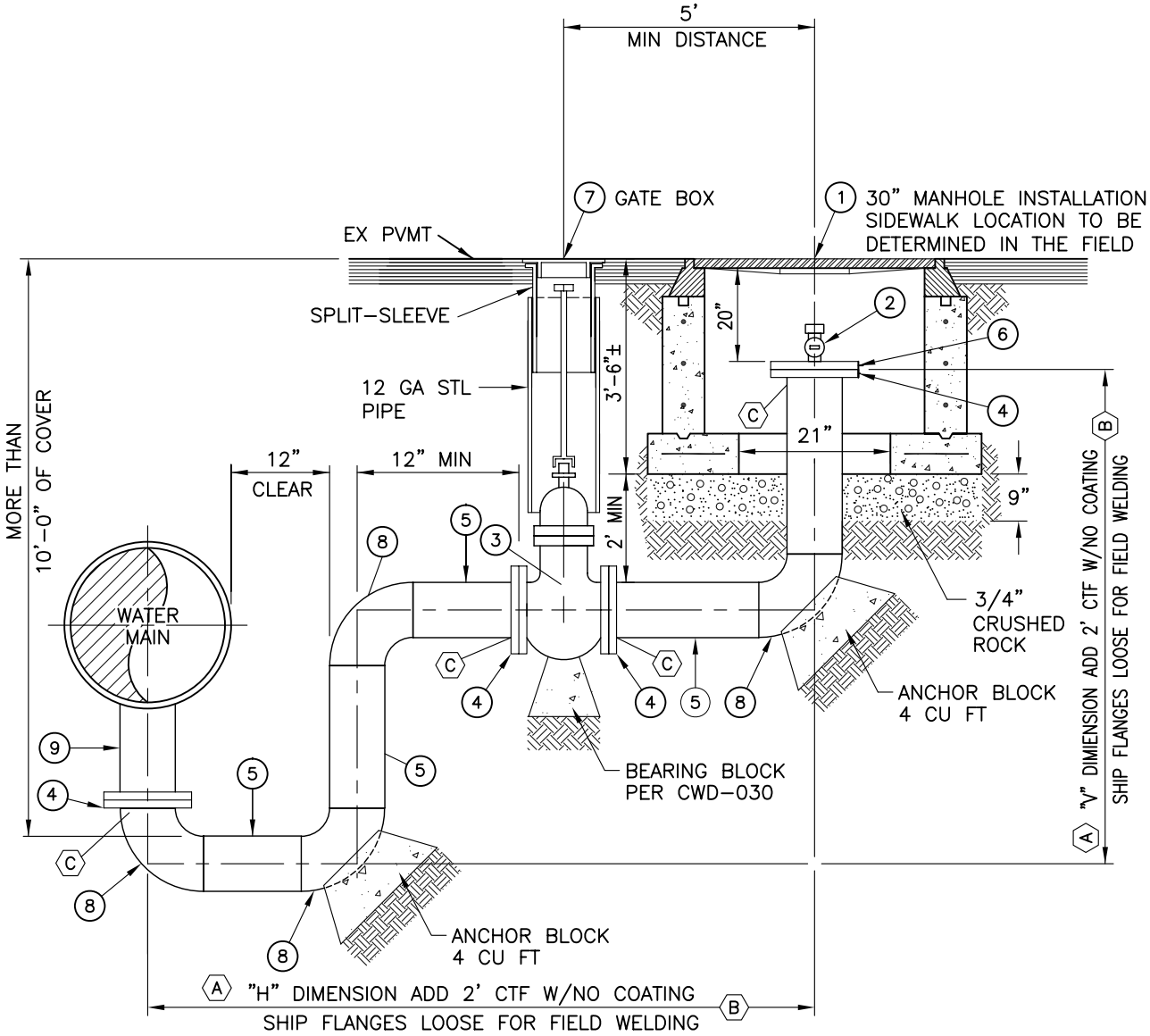

BILL OF MATERIALS		
ITEM	QUANTITY	REFERENCE
1 30" MANHOLE COVER & RIM 30" ID CONC MANHOLE SECTION	1	CWD-811
2 1" MIPT X MIPT BALL CORP STOP & 1" BRASS CAP	1	CWD-500
3 8" FLANGED RW GATE VALVE	1	
4 8" SLIP-ON WELDED FLANGE	4	
5 8" ML&C STL PIPE 10 GA, 8 5/8" OD 1/2" CML, 3/4" CMC	VARIES	
6 8" BLIND FLANGE W/1" IPT TAP	1	
7 10" GATE BOX CAP, GALV SPLIT-SLEEVE, AND 12 GA STL PIPE	VARIES	CWD-515
8 8" 90° ELL	4	
9 8" FLANGED OUTLET	1	CWD-300

NOTES:

A STATION, LOCATION, AND SPECIAL NOTES PER PLAN AND PROFILE SHEETS

B WELD ALL PIPE JOINTS 360°

C HOLD BACK COATING 6"

WATER DISTRIBUTION & TRANSMISSION CONSTRUCTION METHODS	8" BLOW-OFF BELOW GRADE WITH MORE THAN 10' OF COVER

CITY OF RIVERSIDE PUBLIC UTILITIES STANDARD DRAWING | DATE: OCT 2009 | CWD-410-B

0	DRAWN WEF	DATE 10-09	CHECK	APPROV.	1	DRAWN	DATE	CHECK	APPROV.	2	DRAWN	DATE	CHECK	APPROV.	3	DRAWN	DATE	CHECK	APPROV.

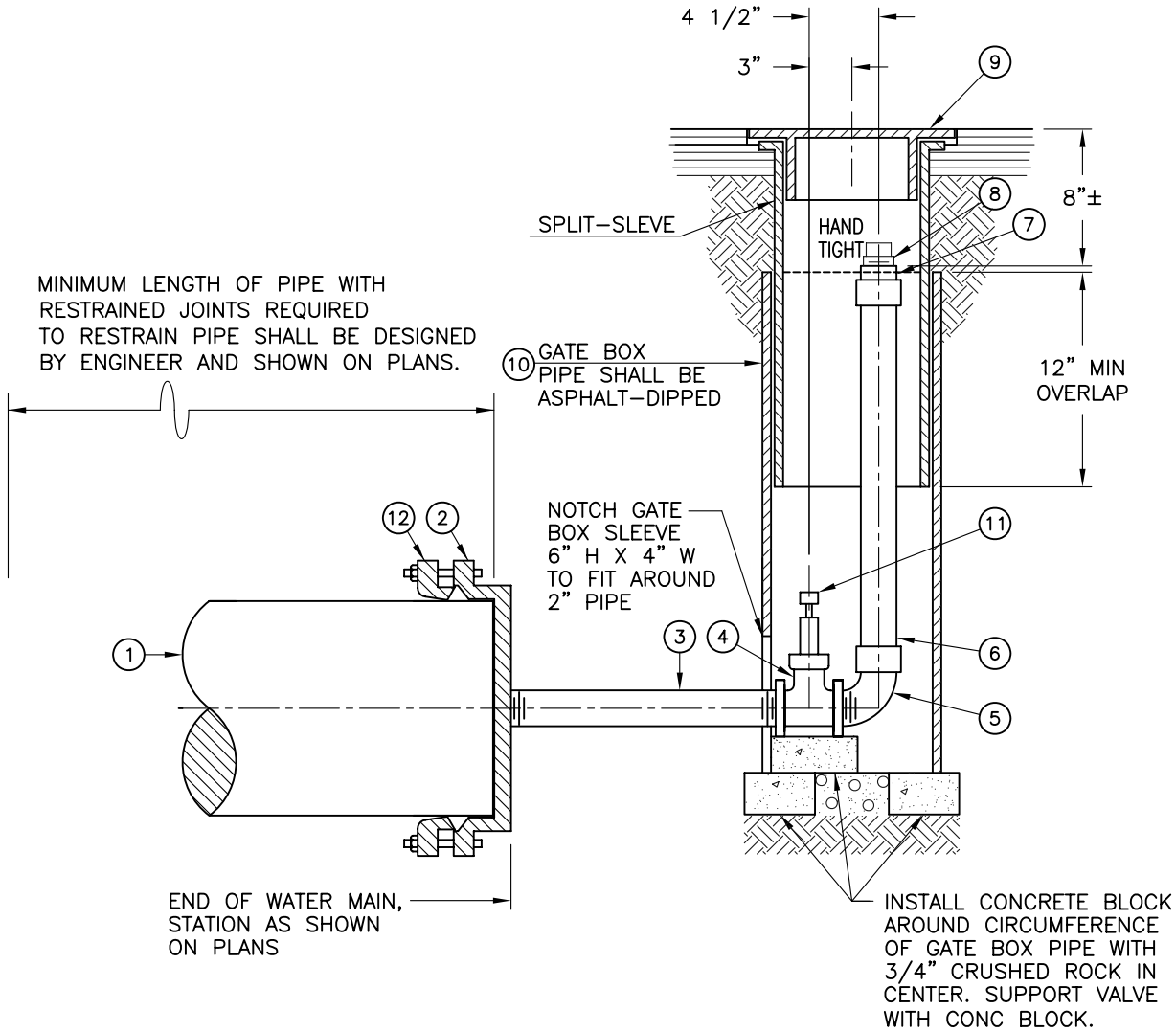

BILL OF MATERIALS		
ITEM	QUANTITY	REFERENCE
1 4" THROUGH 12" MAIN	1	PER PLAN
2 MAIN SIZE MJ CAP W/ 2" TAP IPF	1	PER PLAN
3 2" x 12" BRASS NIPPLE	1	
4 2" BRONZE VALVE, IPF, PER SPEC	1	
5 2" 90° ELL SW x IPM	1	
6 2" x 30"± COPPER PIPE, HARD, NO JOINTS	VARIES	
7 2" ADAPTER SW x IPF	1	
8 2" BRASS PLUG, IPM	1	
9 10" GATE BOX CAP AND SPLIT SLEEVE	1	CWD–515
10 10" DIA, 12 GA, STEEL PIPE	VARIES	
11 1" SQ NUT FOR 2" VALVE AS REQUIRED	1	SUPPLIED BY CITY
12 MAIN SIZE GRIP RING KIT	1	

3	DRAWN	DATE	CHECK	APPROV.
2	DRAWN	DATE	CHECK	APPROV.
1	DRAWN	DATE	CHECK	APPROV.
0	DRAWN WEF	DATE 10–09	CHECK	APPROV.

WATER
DISTRIBUTION & TRANSMISSION
CONSTRUCTION METHODS

TYPICAL 2" BLOW-OFF ASSEMBLY FOR MAINS WITH LESS THAN 42" OF COVER

CITY OF RIVERSIDE PUBLIC UTILITIES STANDARD DRAWING | DATE: OCT 2009 | CWD-411-A

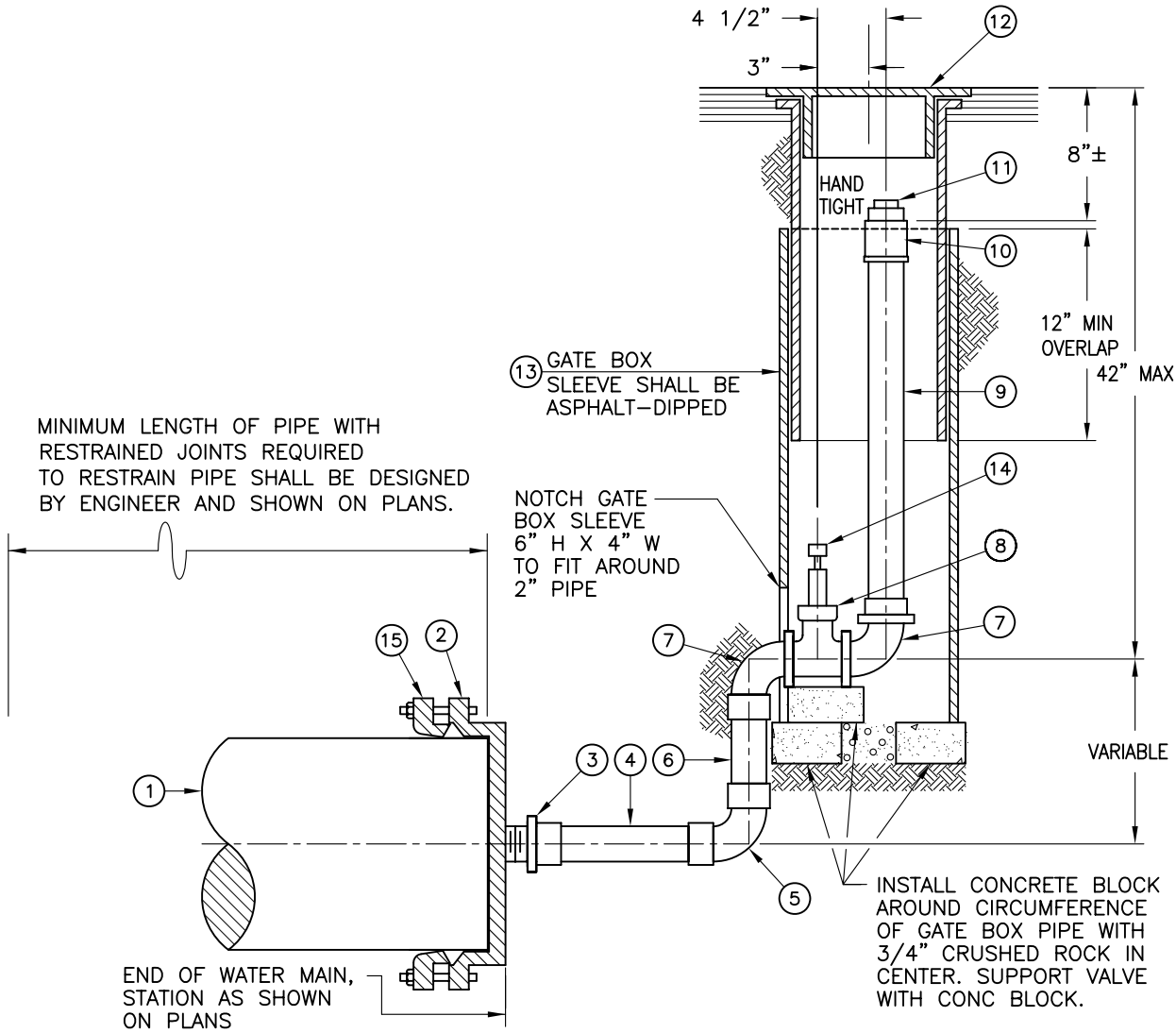

BILL OF MATERIALS

ITEM	QUANTITY	REFERENCE
1 4" THROUGH 12" MAIN	1	PER PLAN
2 MAIN SIZE MJ CAP WITH 2" TAP IPF	1	PER PLAN
3 2" ADAPTER IPM x SW	1	
4 2" X 12" COPPER PIPE, SOFT	1	
5 2" 90° ELL SW x SW	1	
6 2" COPPER PIPE, HARD DRAWN	VARIES	
7 2" 90° BRASS ELL IPM x SW	2	
8 2" BRONZE VALVE, FIPT, PER SPEC	1	
9 2" COPPER PIPE, HARD (NO JOINTS)	VARIES	
10 2" ADAPTER SW x IPF	1	
11 2" BRASS PLUG IPM	1	
12 10" GATE BOX CAP & SPLIT SLEEVE	1	CWD-515
13 10" DIA STEEL SLEEVE (VARIES)	VARIES	
14 1" SQ NUT FOR 2" VALVE AS REQUIRED	1	SUPPLIED BY CITY
15 MAIN SIZE GRIP RING KIT	1	

0	DRAWN WEF	DATE 10-09	CHECK	APPROV.
1	DRAWN	DATE	CHECK	APPROV.
2	DRAWN	DATE	CHECK	APPROV.
3	DRAWN	DATE	CHECK	APPROV.

WATER
DISTRIBUTION & TRANSMISSION
CONSTRUCTION METHODS

TYPICAL 2" BLOW-OFF ASSEMBLY FOR MAINS WITH MORE THAN 42" OF COVER

CITY OF RIVERSIDE PUBLIC UTILITIES STANDARD DRAWING | DATE: OCT 2009 | CWD-411-B

3	DRAWN	DATE	CHECK	APPROV.	
2	DRAWN	DATE	CHECK	APPROV.	
1	DRAWN	DATE	CHECK	APPROV.	
0	DRAWN WEF	DATE 10-09	CHECK	APPROV.	

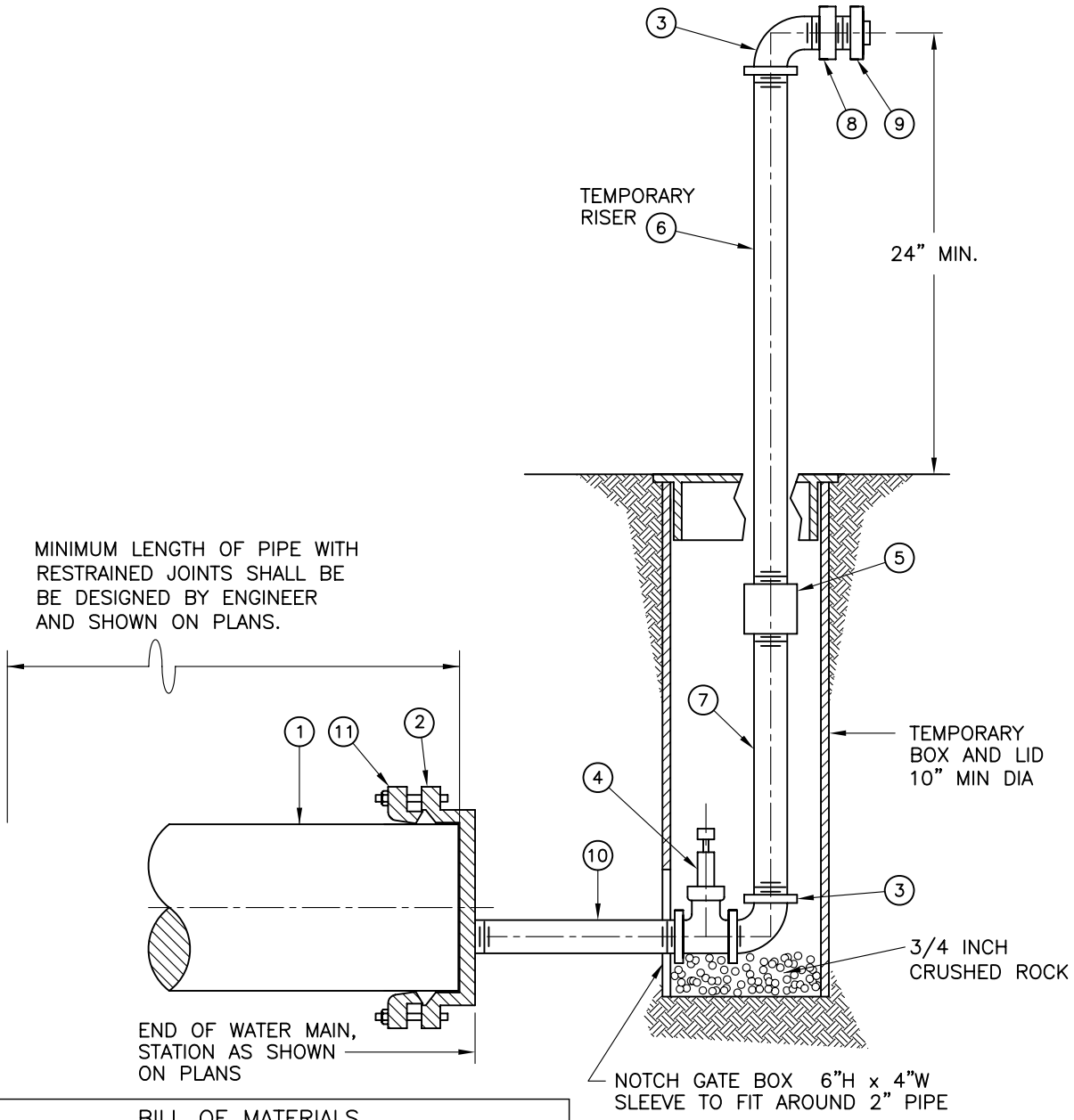

BILL OF MATERIALS	
	QUANTITY
(1) 4" THROUGH 10" WATER MAIN	PER PLAN
(2) MJ END CAP WITH 2" TAP	1
(3) 2" GALV 90° STREET ELL (IPT)	2
(4) 2" GATE (IPT)	1
(5) 2" GALV COUPLING (IPT)	1
(6) 2" x 30"± GALV PIPE (IPT)	1
(7) 2" x 24"± GALV PIPE (IPT)	1
(8) 2" IPF x 2 1/2" MHT BUSHING	1
(9) 2 1/2" HOSE CAP	1
(10) 2" x 12"± GALV NIPPLE (IPT)	1
(11) MAIN SIZE GRIP RING KIT	1

NOTES:

1.) CONTRACTOR SHALL LEAVE END CAP IN PLACE UNTIL FINAL CONNECTION BY CITY FORCES

WATER
DISTRIBUTION & TRANSMISSION
CONSTRUCTION METHODS

4" THROUGH 10" TEMPORARY CONSTRUCTION END CAPS FOR FLUSHING, TESTING, & CHLORINATION

RIVERSIDE PUBLIC UTILITIES STANDARD DRAWING | DATE: OCT 2009 | CWD-412

3	DRAWN	DATE	CHECK	APPROV.	
2	DRAWN	DATE	CHECK	APPROV.	
1	DRAWN	DATE	CHECK	APPROV.	
0	DRAWN WEF	DATE 10-09	CHECK	APPROV.	

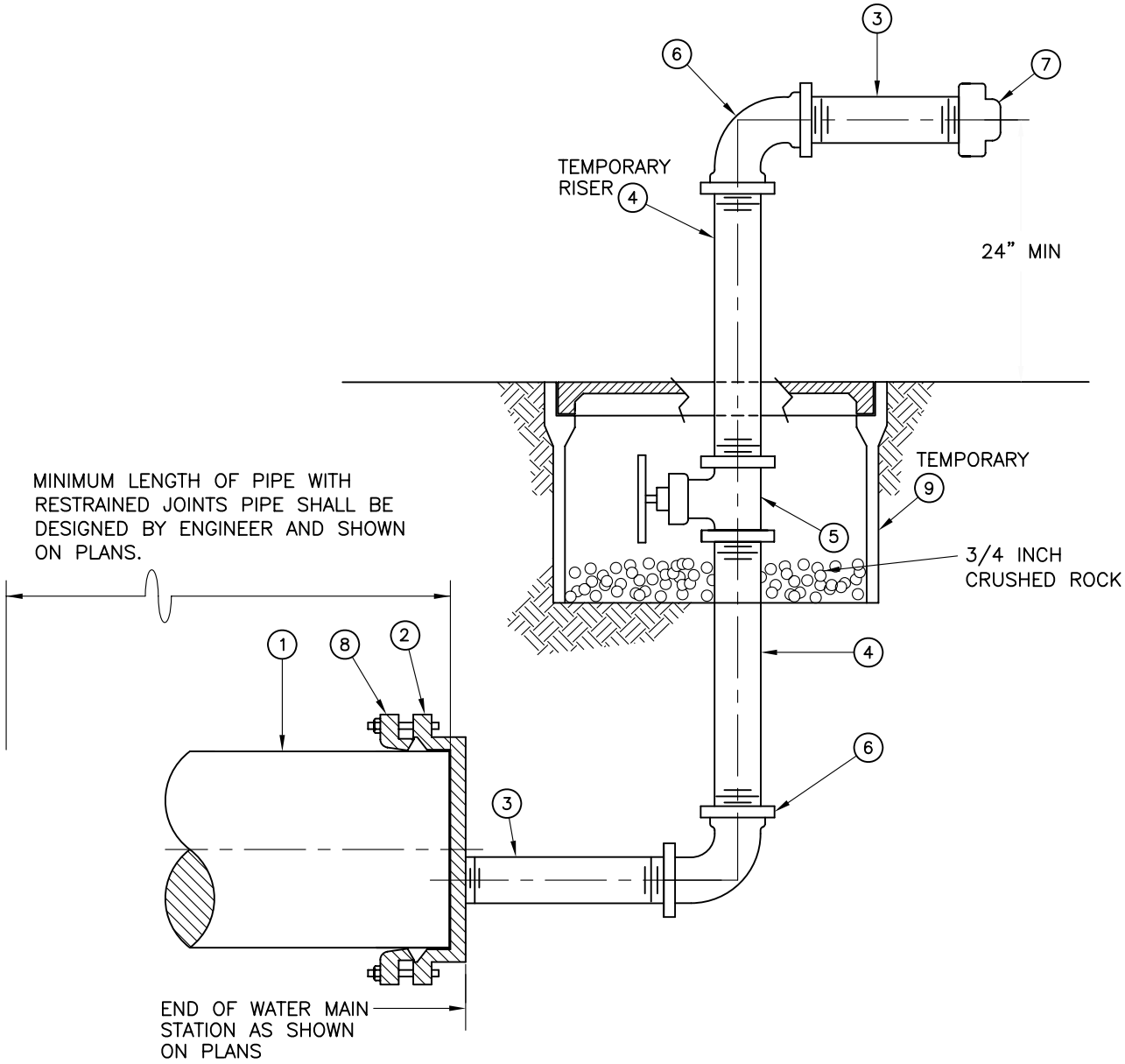

BILL OF MATERIALS	
ITEM	QUANTITY
(1) 12" – 20" WATER MAIN	PER PLAN
(2) 12" – 20 " MJ END CAP W/4" ECCENTRIC TAP (IPT)	1
(3) 4" x 12" GALV STEEL PIPE (IPT)	2
(4) 4" GALV STEEL PIPE (IPT)	6 LF ±
(5) 4" VALVE (FIPT), PER SPECIFICATIONS	1
(6) 4" x 90° GALV STEEL ELL (FIPT)	2
(7) 4" GALV END CAP (FIPT)	1
(8) MAIN SIZE GRIP RING KIT	1
(9) METER VAULT PER SPECIFICATIONS	1

NOTES:

1.) CONTRACTOR SHALL LEAVE END CAP IN PLACE UNTIL FINAL CONNECTION BY CITY FORCES

WATER
DISTRIBUTION & TRANSMISSION
CONSTRUCTION METHODS

12" -20" DI TEMPORARY CONSTRUCTION END CAP FOR FLUSHING, TESTING, AND CHLORINATION

CITY OF RIVERSIDE PUBLIC UTILITIES STANDARD DRAWING | DATE: OCT 2009 | CWD-413

3	DRAWN	DATE	CHECK	APPROV.	
2	DRAWN	DATE	CHECK	APPROV.	
1	DRAWN	DATE	CHECK	APPROV.	
0	DRAWN WEF	DATE 10-09	CHECK	APPROV.	

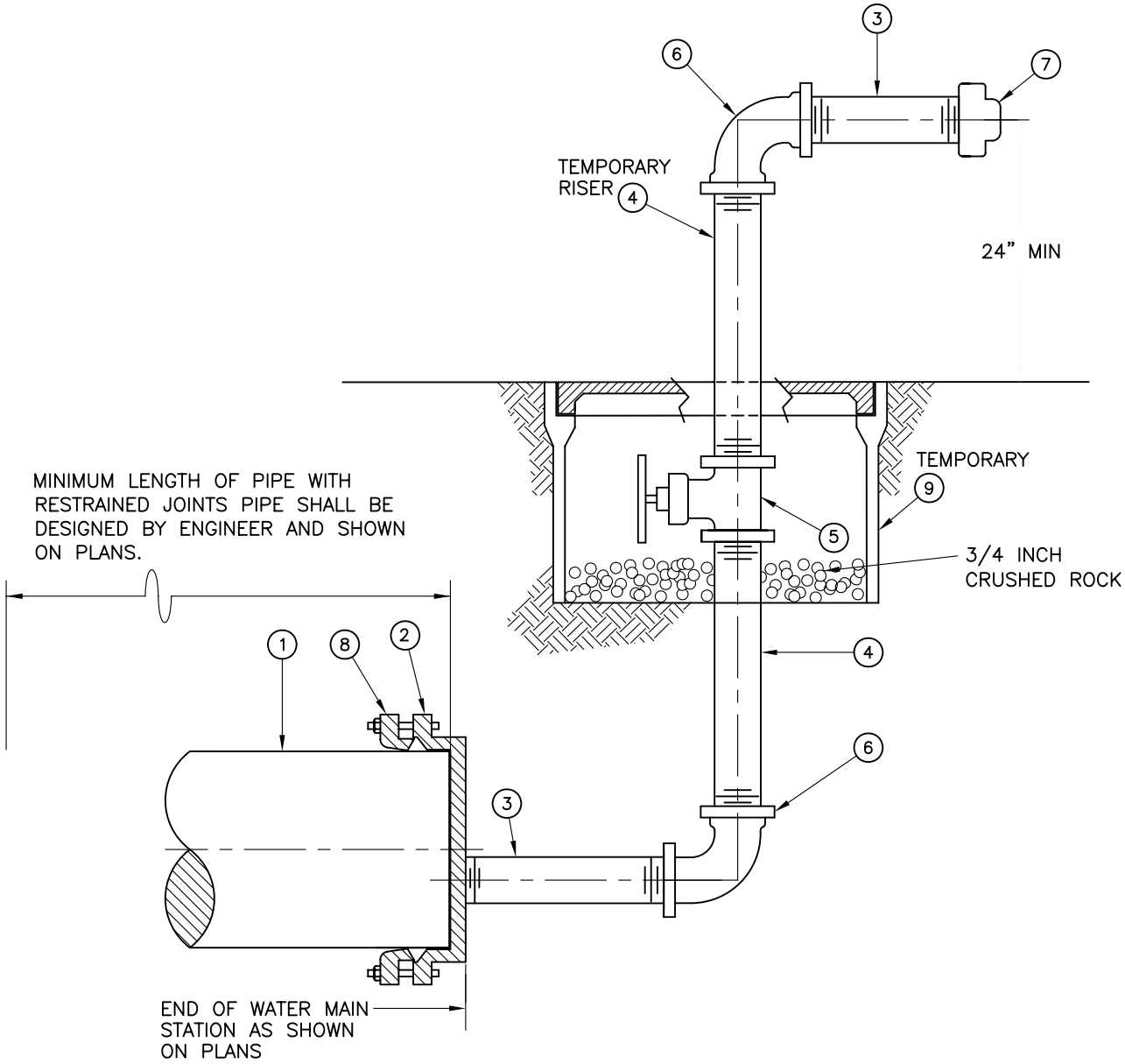

BILL OF MATERIALS	
ITEM	QUANTITY
(1) 16" – 54" WATER MAIN	PER PLAN
(2) 16" MJ END CAP W/4" ECCENTRIC TAP (IPT)	1
(3) 16"–54" GALV STEEL PIPE (IPT)	2
(4) 16"–54" GALV STEEL PIPE (IPT)	6 LF ±
(5) 16"–54" VALVE (FIPT), PER SPECIFICATIONS	1
(6) 16"– 54"x 90° GALV STEEL ELL (FIPT)	2
(7) 16" –54" GALV END CAP (FIPT)	1
(8) MAIN SIZE GRIP RING KIT	1
(9) METER VAULT PER SPECIFICATIONS	1

NOTES:

1.) CONTRACTOR SHALL LEAVE END CAP IN PLACE UNTIL FINAL CONNECTION BY CITY FORCES

WATER
DISTRIBUTION & TRANSMISSION
CONSTRUCTION METHODS

FOR STEEL 16" - 54" CML & C TEMPORARY CONSTRUCTION END CAP FOR FLUSHING TESTING AND CHLORINATION

CITY OF RIVERSIDE PUBLIC UTILITIES STANDARD DRAWING | DATE: OCT-2009 | CWD-414

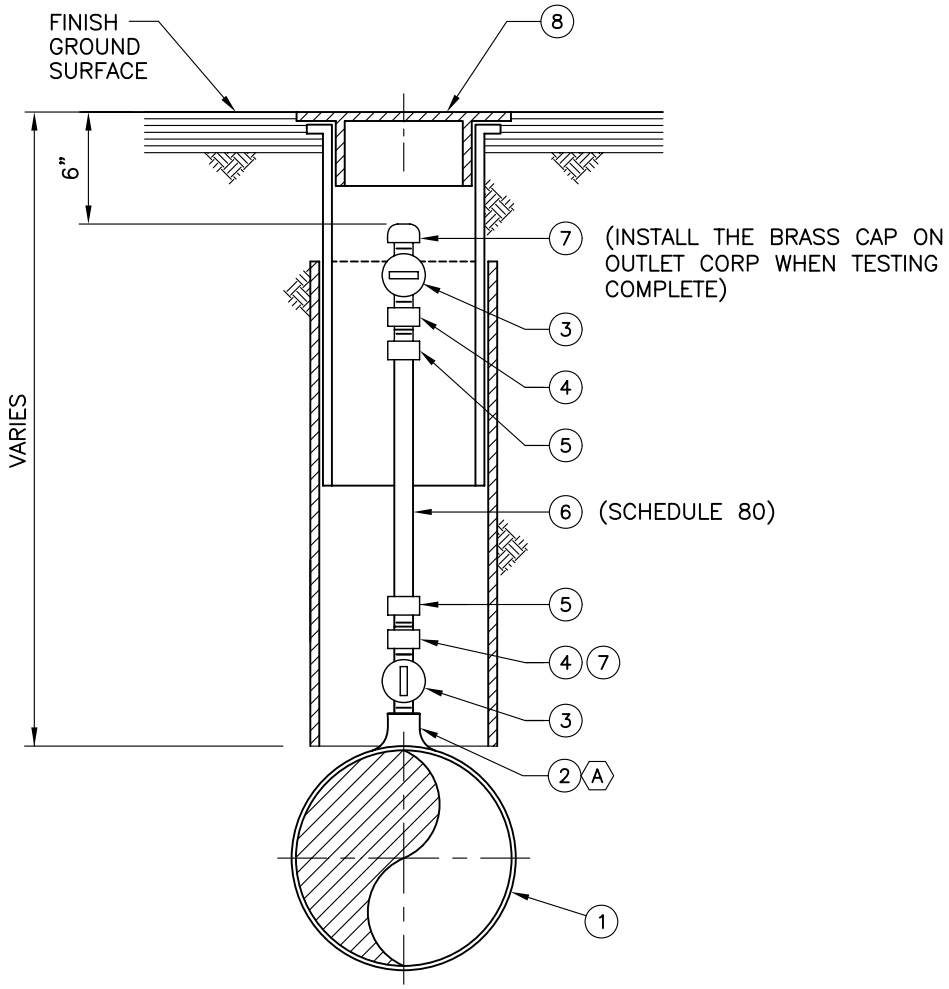

BILL OF MATERIALS		
	QUANTITY	REF
1 ML&C STEEL OR DIP WATER MAIN	PER PLAN	
2 1" THREADED OUTLET	1	CWD-340
3 1" MIPT x MIPT BALL CORP STOP	2	
4 1" GALV STEEL COUPLING	2	
5 1" PVC ADAPTER	2	
6 1" PVC PIPE	VARIES	
7 1" BRASS CAP	1	
8 10" GATE BOX AND SPLIT-SLEEVE	1	CWD-515

NOTES:

1.) CONTRACTOR SHALL REMOVE VALVE BOX, CLOSE AND CAP 1" BALL CORP STOP AND REMOVE PVC RISER FOLLOWING ACCEPTANCE OF THE TRANSMISSION MAIN.

2.) STATION, LOCATION AND SPECIAL NOTES PER PLAN AND PROFILE SHEETS.

A DOUBLE-STRAP SERVICE SADDLES SHALL BE USED ON ALL DIP CONNECTIONS

3	DRAWN	DATE	CHECK	APPROV.
2	DRAWN	DATE	CHECK	APPROV.
1	DRAWN	DATE	CHECK	APPROVE.
0	DRAWN WEF	DATE 10-09	CHECK	APPROV.

WATER
DISTRIBUTION & TRANSMISSION
CONSTRUCTION METHODS

TEMPORARY WATER SAMPLER

CITY OF RIVERSIDE PUBLIC UTILITIES STANDARD DRAWING | DATE: OCT 2009 | CWD-432

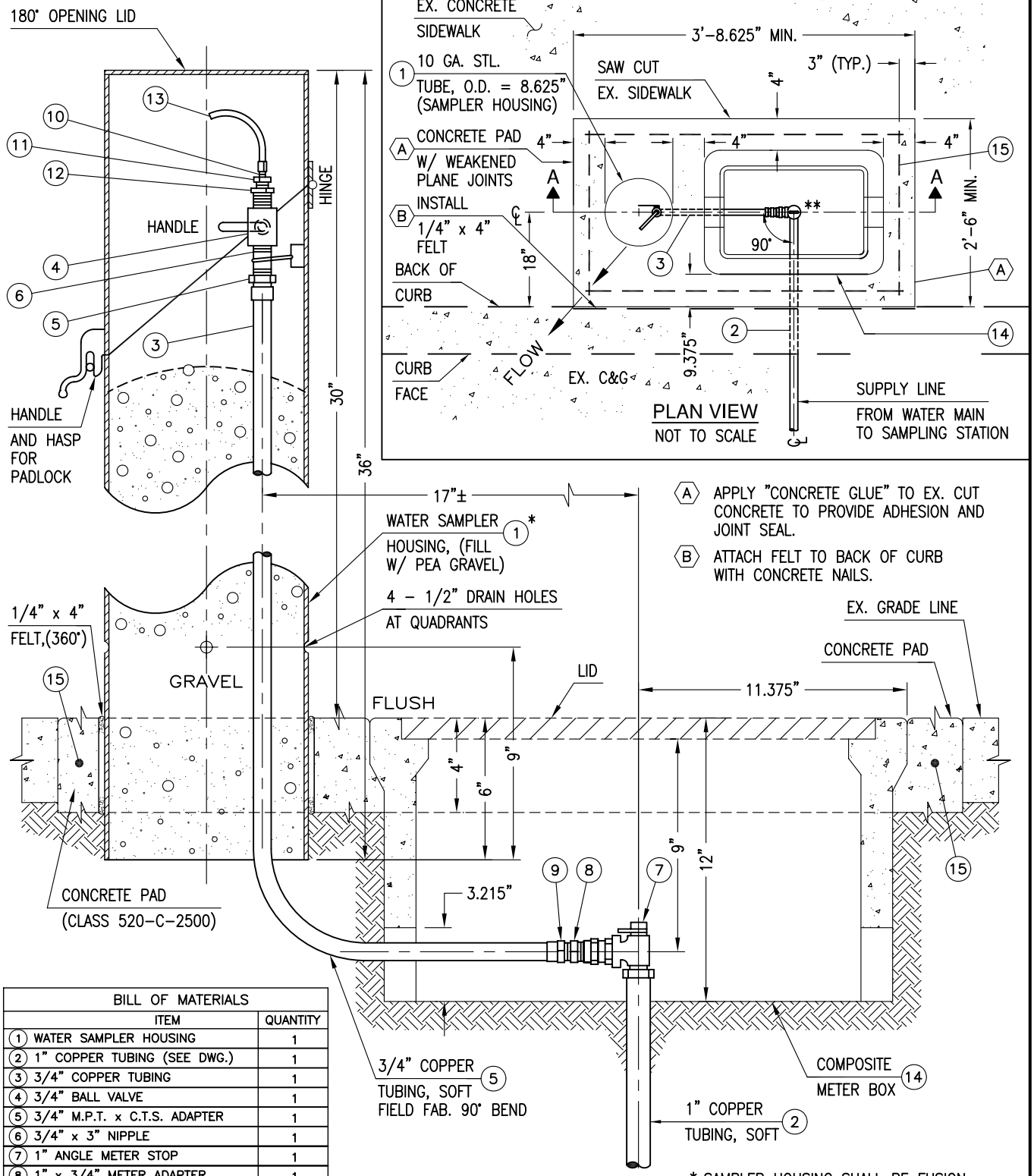

A APPLY "CONCRETE GLUE" TO EX. CUT CONCRETE TO PROVIDE ADHESION AND JOINT SEAL.

B ATTACH FELT TO BACK OF CURB WITH CONCRETE NAILS.

BILL OF MATERIALS	
ITEM	QUANTITY
1 WATER SAMPLER HOUSING	1
2 1" COPPER TUBING (SEE DWG.)	1
3 3/4" COPPER TUBING	1
4 3/4" BALL VALVE	1
5 3/4" M.P.T. x C.T.S. ADAPTER	1
6 3/4" x 3" NIPPLE	1
7 1" ANGLE METER STOP	1
8 1" x 3/4" METER ADAPTER	1
9 3/4" M.P.T. x S/W ADAPTER	1
10 1/4" M.P.T. x C.T.S. ADAPTER	1
11 1/2" x 1/4" BRASS BUSHING	1
12 3/4" x 1/2" BRASS BUSHING	1
13 1/4" COPPER TUBING (12" MIN.)	1
14 METER BOX, PER SPECIFICATIONS	1
15 NO. 3 REBAR	1

* SAMPLER HOUSING SHALL BE FUSION EPOXY COLOR COATED "SAFETY BLUE" INSIDE AND OUT.

** 90° DEFLECTION AT METER STOP REQUIRED ONLY FOR SAMPLERS LOCATED AT CURB FACE OR EDGE OF PAVEMENT.

0	DRAWN RGM	DATE 10-09	CHECK	APPROV.
1	DRAWN	DATE	CHECK	APPROV.
2	DRAWN	DATE	CHECK	APPROV.
3	DRAWN	DATE	CHECK	APPROV.

WATER
DISTRIBUTION & TRANSMISSION
CONSTRUCTION METHODS

WATER QUALITY SAMPLING STATION

RIVERSIDE PUBLIC UTILITIES STANDARD DRAWING | DATE: OCT 2009 | CWD-433

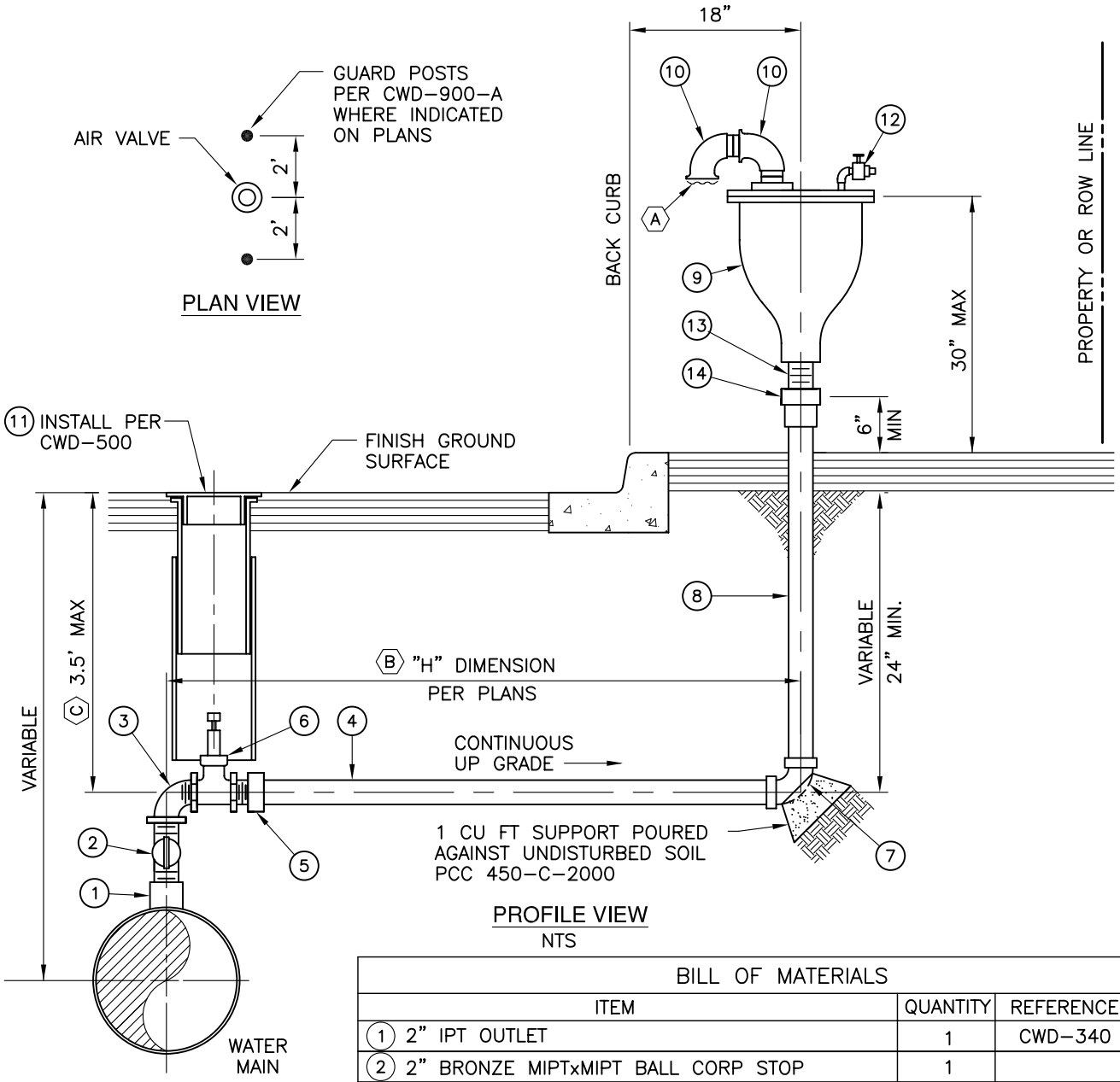

NOTES:

A. A 1/8" SQ MESH GALVANIZED SCREEN SHALL BE EPOXIED FLAT INTO OPEN ST ELL.

B. STATION, LOCATION, AND SPECIAL NOTES PER PLAN AND PROFILE SHEETS.

C. USE 2" COPPER PIPE BETWEEN CORP STOP AND ELL TO ADJUST DEPTH – IF NEEDED.

D. DOUBLE-STRAP SERVICE SADDLES SHALL BE USED ON ALL DIP CONNECTIONS.

BILL OF MATERIALS

ITEM	QUANTITY	REFERENCE
1 2" IPT OUTLET	1	CWD-340
2 2" BRONZE MIPTxMIPT BALL CORP STOP	1	
3 2" BRASS STREET ELL	1	
4 2" TYPE K COPPER PIPE (SOFT)	VARIABLE	
5 2" SW x IPM BRONZE ADAPTER	1	
6 2" RW GATE VALVE	1	
7 2" SW x SW 90° ELL	1	
8 2" HARD DRAWN COPPER PIPE, TYPE K	VARIABLE	
9 2" UNIVERSAL AIR VALVE	1	
10 2" GALV STREET ELL	2	
11 8" GATE VALVE CAP, GALV SPLIT SLEEVE, & 12 GA STL PIPE	1	CWD-500
12 1/4" BRASS GATE VALVE, 1/4" BRASS PLUG, 1/4" x 2" BRASS NIPPLE, 1/4" BRASS STREET ELL	1 EA	
13 2"ø x 6" NIPPLE	1 EA	
14 2" SW x IPF BRONZE ADAPTER	1 EA	

0	DRAWN WEF	DATE 10-09	CHECK / APPROV.
1	DRAWN	DATE	CHECK / APPROV.
2	DRAWN	DATE	CHECK / APPROV.
3	DRAWN	DATE	CHECK / APPROV.

WATER
DISTRIBUTION & TRANSMISSION
CONSTRUCTION METHODS

TYPICAL 2" AIR VALVE INSTALLATION

CITY OF RIVERSIDE PUBLIC UTILITIES STANDARD DRAWING | DATE: OCT 2009 | CWD-451

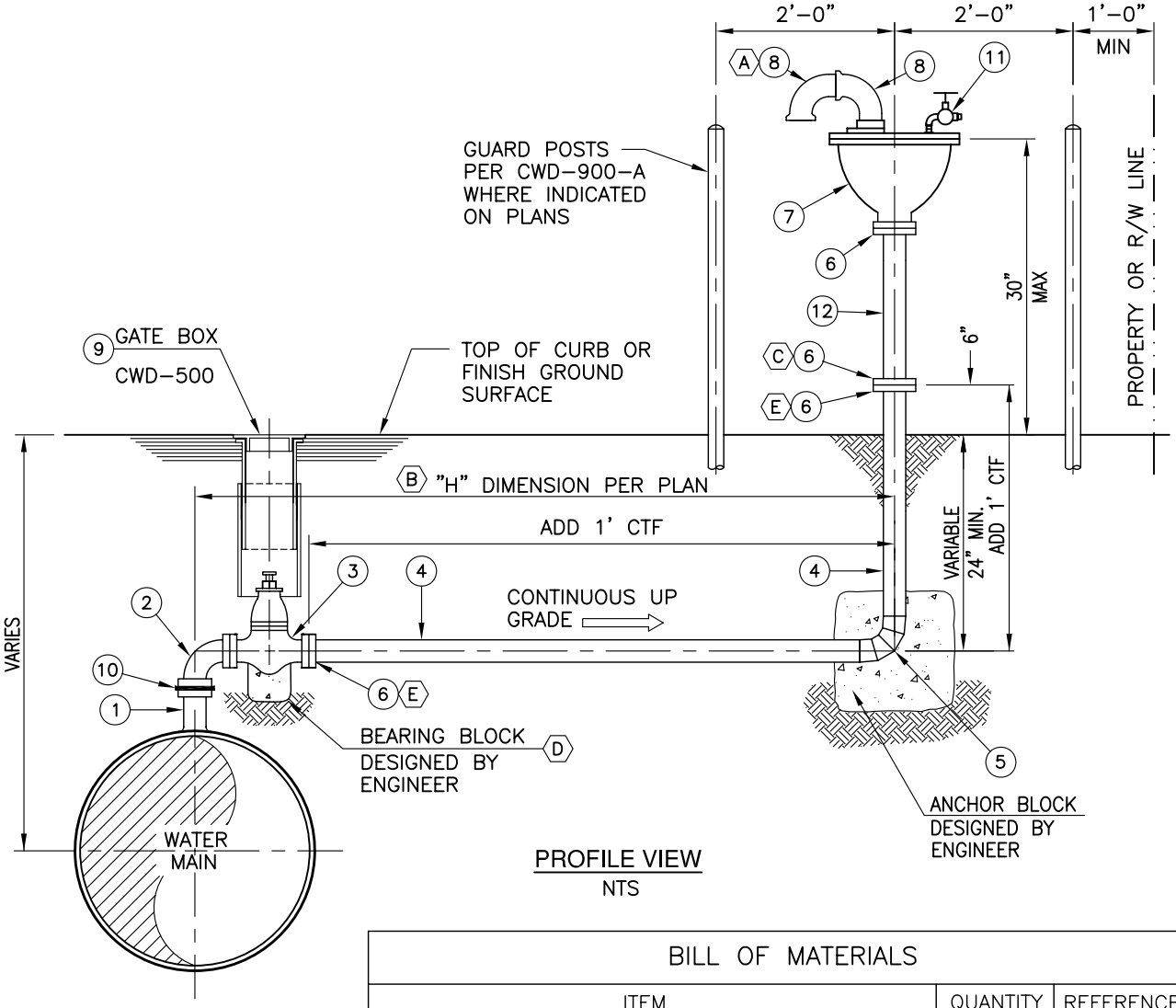

PROFILE VIEW
NTS

NOTES:

A A 1/8" SQ. MESH, GALVANIZED SCREEN, SHALL BE EPOXIED INTO OPEN STREET ELL.

B STATION, LOCATION, AND SPECIAL NOTES PER PLAN AND PROFILE SHEETS.

C BREAK–OFF BOLTS, CADMIUM–PLATED OR GALVANIZED. INSTALL WITH NUT ON TOP AND COUNTER–BORE, PACKED WITH SILICONE.

D BEARING BLOCK SHALL NOT REST ON MAIN AND SHALL BE NOTCHED ON BOTH SIDES PER CWD–500

E HOLD BACK COATING 6"

BILL OF MATERIALS

ITEM	QUANTITY	REFERENCE
1 4" FLANGED OUTLET	1	CWD–300
2 4" 90° ELL F/F	1	
3 4" RW GATE VALVE F/F	1	
4 4" ML&C STL PIPE, 10 GA 4" ID, 5/16" CML, 3/4" CMC	VARIABLE	
5 4" – 4 PC 90° ELL (WELD)	1	
6 4" WELD FLANGE, SHIP LOOSE	3	
7 4" UNIVERSAL AIR VALVE	1	
8 4" GALV STREET ELL	2	
9 8" GATE BOX CAP, GALV SPLIT–SLEEVE, AND 12 GA STL PIPE	1	CWD–500
10 FLANGE INSULATION KIT AS REQUIRED PER SPECIFICATIONS	1	
11 1/2" BRASS GV 1/2" x 2" BRASS NIPPLE, 1/2" BRASS STREET ELL, & 1/2" BRASS PLUG	1	
12 4" DIA X 12" STL SPOOL, PE X PE, ML & NO COATING	1	

APPROV.	CHECK	DATE	DRAWN
3			
2			
1			
0		DATE 10–09	DRAWN WEF

WATER
DISTRIBUTION & TRANSMISSION
CONSTRUCTION METHODS

TYPICAL 4" AIR VALVE INSTALLATION

CITY OF RIVERSIDE PUBLIC UTILITIES STANDARD DRAWING | DATE: OCT 2009 | CWD-460

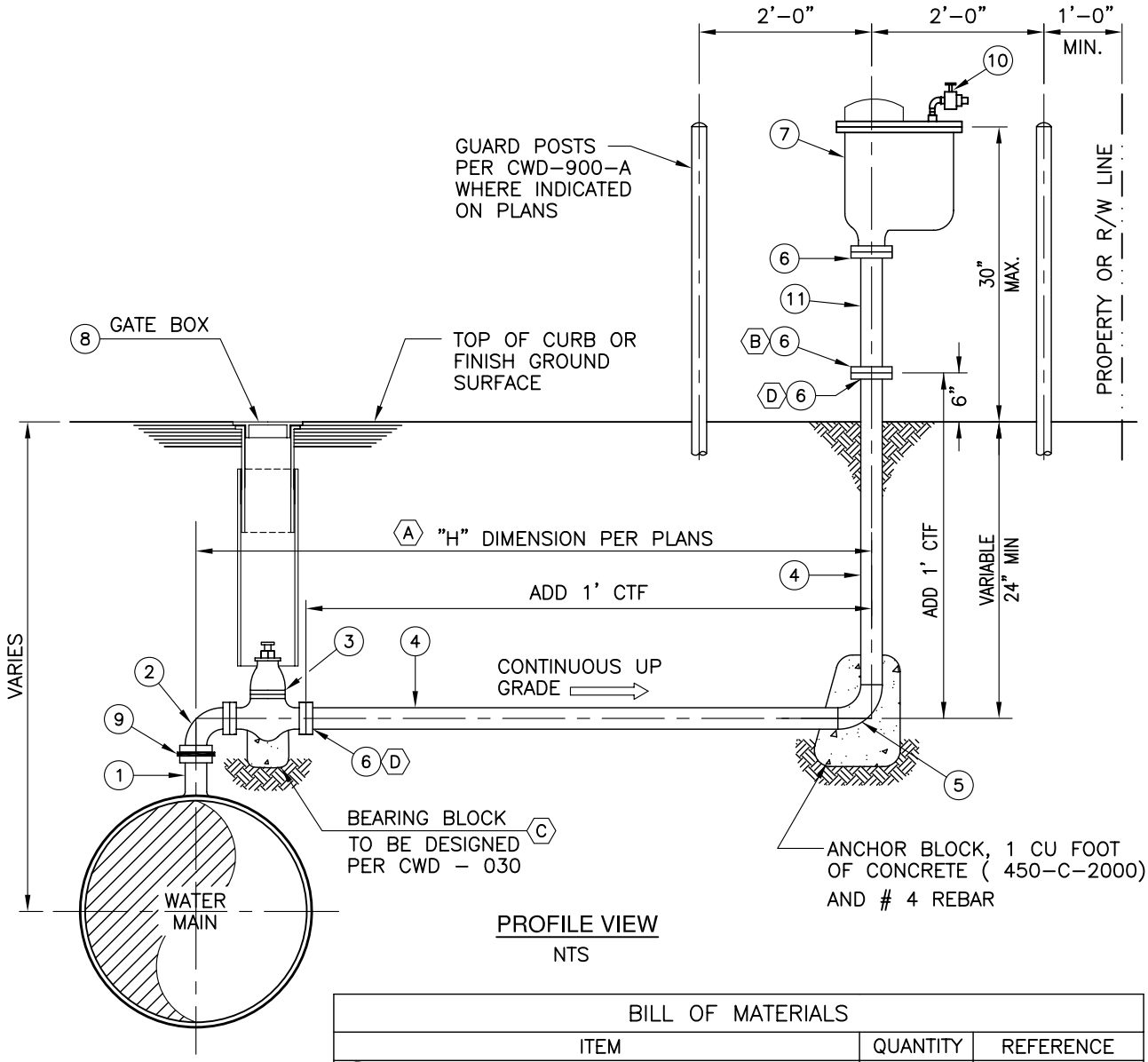

PROFILE VIEW

NTS

NOTES:

(A) STATION, LOCATION, AND SPECIAL NOTES PER PLAN AND PROFILE SHEETS.

(B) BREAK-OFF BOLTS, CADMIUM-PLATED OR GALVANIZED. INSTALL WITH NUT ON TOP AND COUNTER-BORE, PACKED WITH SILICONE.

(C) BEARING BLOCK SHALL NOT REST ON MAIN AND SHALL BE NOTCHED ON BOTH SIDES PER CWD-500

(D) HOLD BACK COATING 18"

BILL OF MATERIALS

ITEM	QUANTITY	REFERENCE
(1) 6" FLANGED OUTLET	1	CWD-300
(2) 6" 90° ELL F/F	1	
(3) 6" RW GATE VALVE F/F	1	CWD-500
(4) 6" ML&C STL PIPE, 10 GA 6" ID, 5/16" CML, 3/4" CMC	VARIABLE	
(5) 6" - 90° WELD ELL	1	
(6) 6" WELD FLANGE, SHIP FLG LOOSE	6	
(7) 6" COMBINATION AIR VALVE, PER SPEC	1	
(8) 8" GATE BOX CAP, GALV SPLIT-SLEEVE, AND 12 GA STL PIPE	1	CWD-515
(9) FLANGE INSULATION KIT AS REQUIRED PER SPECIFICATIONS	1	
(10) 1/2" BRASS GV, 1/2" x 2" BRASS NIPPLE, 1/2" BRASS STREET ELL, 1/2" BRASS PLUG	1 EA	
(11) 6" DIA X 12" STL SPOOL, PE X PE, ML & NO COATING	1	

0	DRAWN WEF	DATE 10-09	CHECK	APPROV.	1	DRAWN	DATE	CHECK	APPROV.	2	DRAWN	DATE	CHECK	APPROV.	3	DRAWN	DATE	CHECK	APPROV.

WATER
DISTRIBUTION & TRANSMISSION
CONSTRUCTION METHODS

TYPICAL 6" AIR VALVE INSTALLATION

CITY OF RIVERSIDE PUBLIC UTILITIES STANDARD DRAWINGS | DATE: OCT 2009 | CWD-462

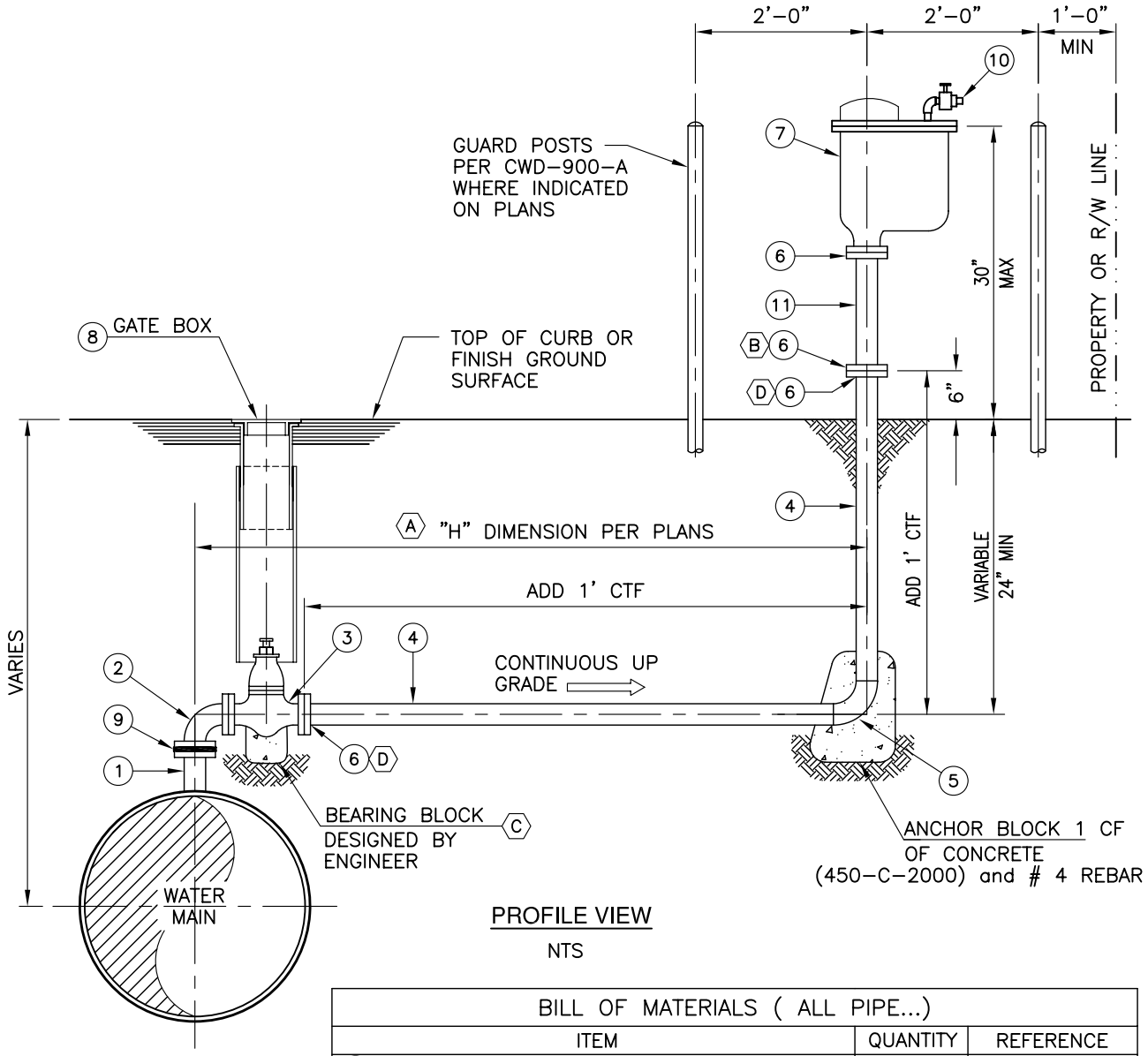

PROFILE VIEW

NTS

NOTES:

(A) STATION, LOCATION, AND SPECIAL NOTES PER PLAN AND PROFILE SHEETS.

(B) BREAK-OFF BOLTS, CADMIUM-PLATED OR GALVANIZED. INSTALL WITH NUT ON TOP AND COUNTER-BORE, PACKED WITH SILICONE.

(C) BEARING BLOCK SHALL NOT REST ON MAIN AND SHALL BE NOTCHED ON BOTH SIDES PER CWD-500

(D) HOLD BACK COATING 18".

BILL OF MATERIALS (ALL PIPE...)

ITEM	QUANTITY	REFERENCE
(1) 8" FLANGED OUTLET	1	CWD-300
(2) 8" 90° ELL F x F	1	
(3) 8" RW GATE VALVE F x F	1	CWD-500
(4) 8" ML&C STL PIPE, 10 GA 8" ID, 5/16" CML, 3/4" CMC	VARIABLE	
(5) 8" - 90° WELD ELL	1	
(6) 8" WELD FLANGE, SHIP LOOSE	6	
(7) 8" COMBINATION AIR VALVE, PER SPEC	1	
(8) 8" GATE BOX CAP, GALV SPLIT-SLEEVE, AND 12 GA STL PIPE	1	CWD-515
(9) FLANGE INSULATION KIT AS REQUIRED PER SPECIFICATIONS	1	
(10) 1/2" BRASS GV 1/2" x 2" BRASS NIPPLE, 1/2" BRASS STREET ELL, 1/2" BRASS PLUG	1 EA	
(11) 8" DIA X 12" STL SPOOL, PE X PE, ML & NO COATING	1	

0	DRAWN WEF	DATE 10-09	CHECK	APPROV.
1	DRAWN	DATE	CHECK	APPROV.
2	DRAWN	DATE	CHECK	APPROV.
3	DRAWN	DATE	CHECK	APPROV.

WATER
DISTRIBUTION & TRANSMISSION
CONSTRUCTION METHODS

TYPICAL 8" AIR VALVE INSTALLATION

CITY OF RIVERSIDE PUBLIC UTILITIES STANDARD DRAWING | DATE: OCT 2009 | CWD-465

3	DRAWN	DATE	CHECK	APPROV.	
2	DRAWN	DATE	CHECK	APPROV.	
1	DRAWN	DATE	CHECK	APPROV.	
0	DRAWN WEF	DATE 10-09	CHECK	APPROV.	

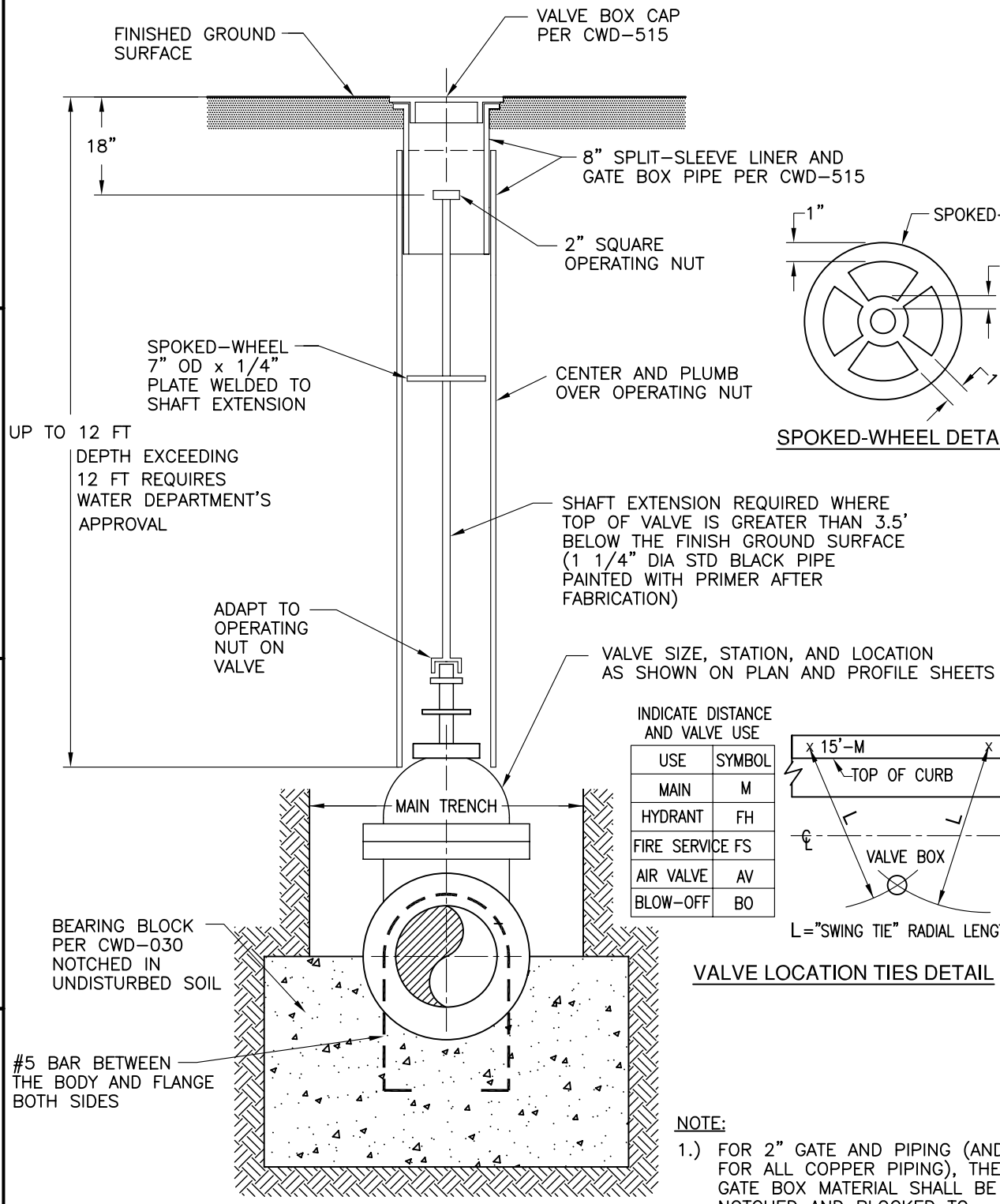

NOTE:

1.) FOR 2" GATE AND PIPING (AND FOR ALL COPPER PIPING), THE GATE BOX MATERIAL SHALL BE NOTCHED AND BLOCKED TO CLEAR SAME.

2.) GATE VALVES ARE TO BE INSTALLED IN THE VERTICAL POSITION UNLESS THEY ARE DESIGNED TO OPERATE IN OTHER POSITIONS.

WATER
DISTRIBUTION & TRANSMISSION
CONSTRUCTION METHODS

TYPICAL VALVE BOX FOR GATE VALVES

CITY OF RIVERSIDE PUBLIC UTILITIES STANDARD DRAWING | DATE: OCT 2009 | CWD-500

3	DRAWN	DATE	CHECK	APPROV.	
2	DRAWN	DATE	CHECK	APPROV.	
1	DRAWN	DATE	CHECK	APPROV.	
0	DRAWN WEF	DATE 10-09	CHECK	APPROV.	

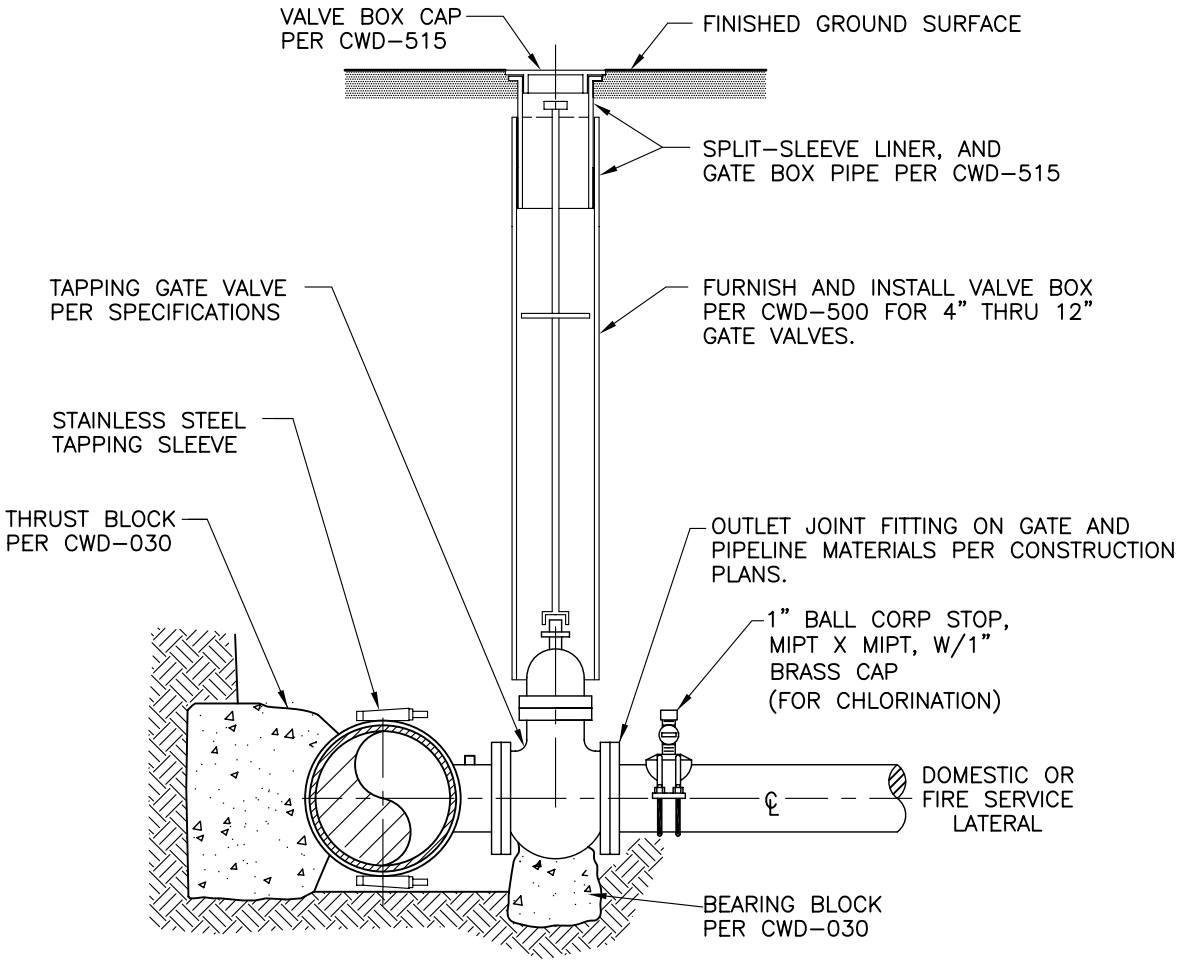

SECTIONAL VIEW

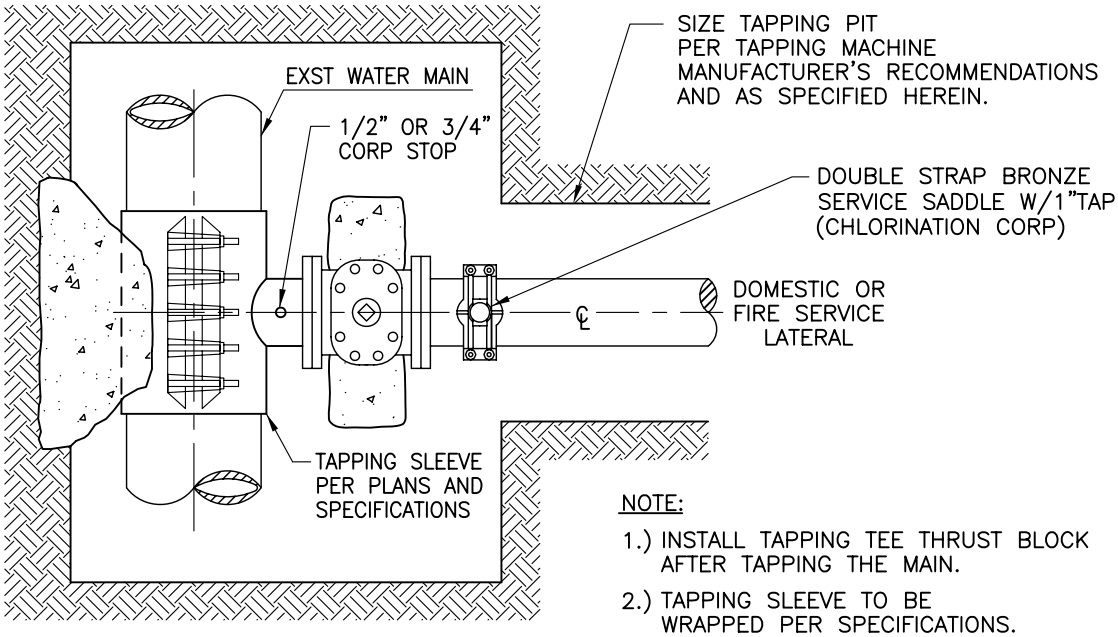

PLAN VIEW

NOTE:

1.) INSTALL TAPPING TEE THRUST BLOCK AFTER TAPPING THE MAIN.

2.) TAPPING SLEEVE TO BE WRAPPED PER SPECIFICATIONS.

WATER
DISTRIBUTION & TRANSMISSION
CONSTRUCTION METHODS

TAPPING SLEEVE AND TAPPING VALVE DETAIL FOR DOMESTIC AND FIRE SERVICES

CITY OF RIVERSIDE PUBLIC UTILITIES STANDARD DRAWING | DATE: OCT 2009 | CWD-504

3	DRAWN	DATE	CHECK	APPROV.	
2	DRAWN	DATE	CHECK	APPROV.	
1	DRAWN	DATE	CHECK	APPROV.	
0	DRAWN WEF	DATE 10-09	CHECK	APPROV.	

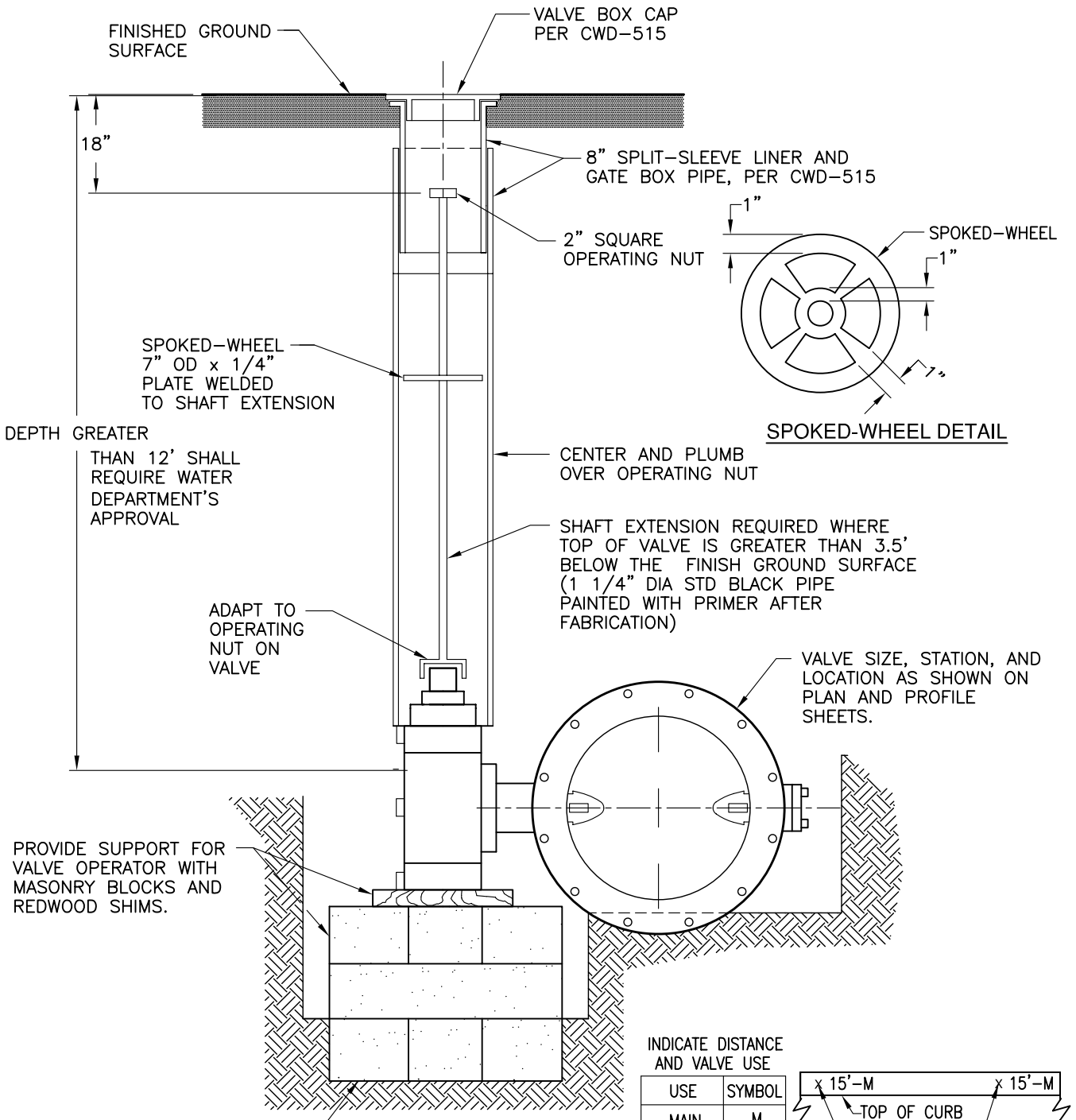

INDICATE DISTANCE AND VALVE USE

USE	SYMBOL
MAIN	M
HYDRANT	FH
FIRE SER	FS
AIR VALVE	AV
BLOW-OFF	BO

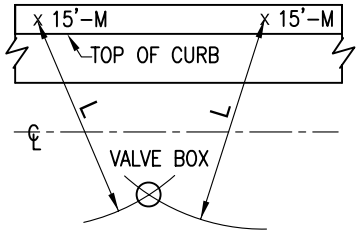

L="SWING TIE" RADIAL LENGTH IN FT

VALVE LOCATION TIES DETAIL

WATER
DISTRIBUTION & TRANSMISSION
CONSTRUCTION METHODS

TYPICAL VALVE BOX FOR BUTTERFLY VALVES

CITY OF RIVERSIDE PUBLIC UTILITIES STANDARD DRAWING | DATE: OCT 2009 | CWD-510

0	1	2	3
DRAWN WEF	DRAWN	DRAWN	DRAWN
DATE 10-09	DATE	DATE	DATE
CHECK	CHECK	CHECK	CHECK
APPROV.	APPROV.	APPROV.	APPROV.

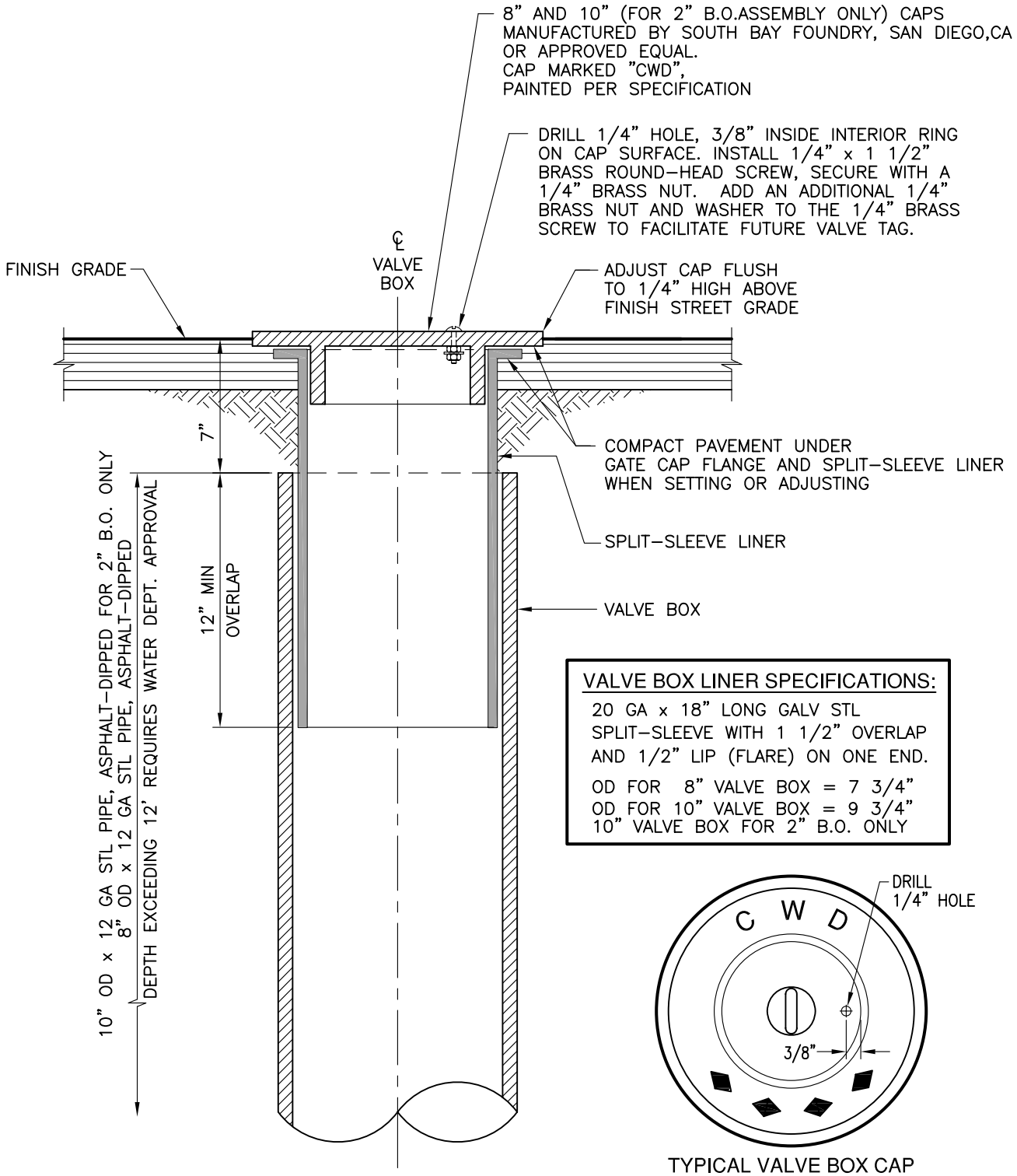

SECTIONAL DETAIL

VALVE BOX LINER SPECIFICATIONS:

20 GA x 18" LONG GALV STL SPLIT-SLEEVE WITH 1 1/2" OVERLAP AND 1/2" LIP (FLARE) ON ONE END.

OD FOR 8" VALVE BOX = 7 3/4"
OD FOR 10" VALVE BOX = 9 3/4"
10" VALVE BOX FOR 2" B.O. ONLY

TYPICAL VALVE BOX CAP

NOTES:

1.) THIS STANDARD IS TO BE USED IN CONJUNCTION WITH STANDARD DRAWINGS CWD-500, CWD-504, AND CWD-510.

WATER
DISTRIBUTION & TRANSMISSION
CONSTRUCTION METHODS

TYPICAL SPLIT-SLEEVE LINER AND CAP FOR 8" AND 10" VALVE BOX

CITY OF RIVERSIDE PUBLIC UTILITIES STANDARD DRAWING | DATE: OCT 2009 | CWD-515

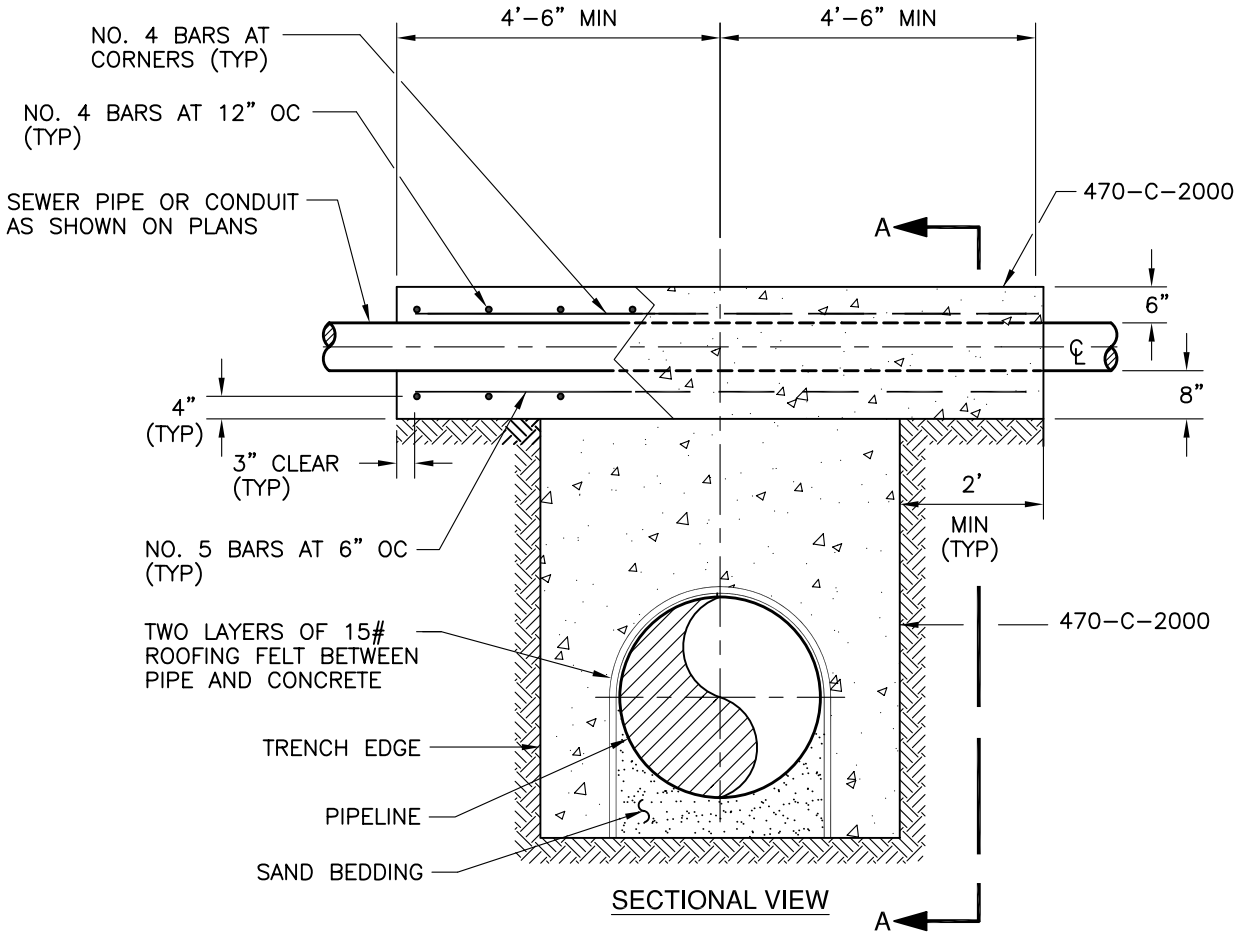

SECTIONAL VIEW

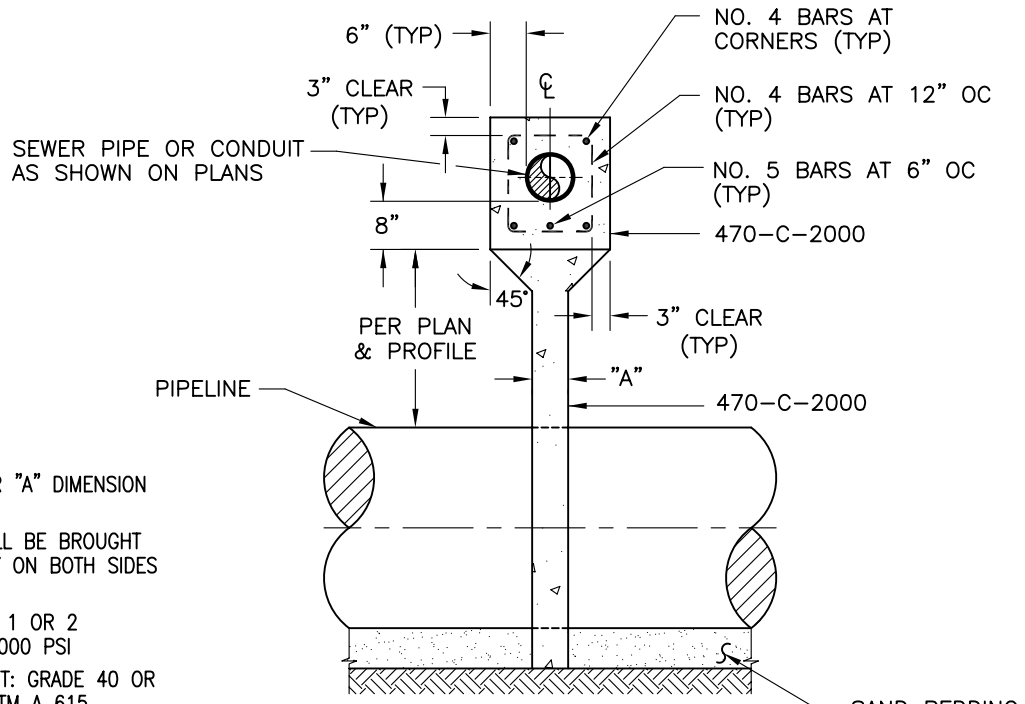

SECTION A-A

NOTES

1.) SEE PLAN FOR "A" DIMENSION (8" MIN)
2.) BACKFILL SHALL BE BROUGHT UP UNIFORMLY ON BOTH SIDES OF WALL.
3.) CEMENT: TYPE 1 OR 2 ASTM 5150, 2000 PSI
4.) REINFORCEMENT: GRADE 40 OR GRADE 60, ASTM A 615
5.) TRENCH WIDTH: OD PIPE + 18" MIN

3	DRAWN	DATE	CHECK	APPROV.
2	DRAWN	DATE	CHECK	APPROV.
1	DRAWN	DATE	CHECK	APPROV.
0	DRAWN WEF	DATE 10–09	CHECK	APPROV.

WATER
DISTRIBUTION & TRANSMISSION
CONSTRUCTION METHODS

TYPICAL CONDUIT SUPPORT

CITY OF RIVERSIDE PUBLIC UTILITIES STANDARD DRAWING | DATE: OCT 2009 | CWD-570

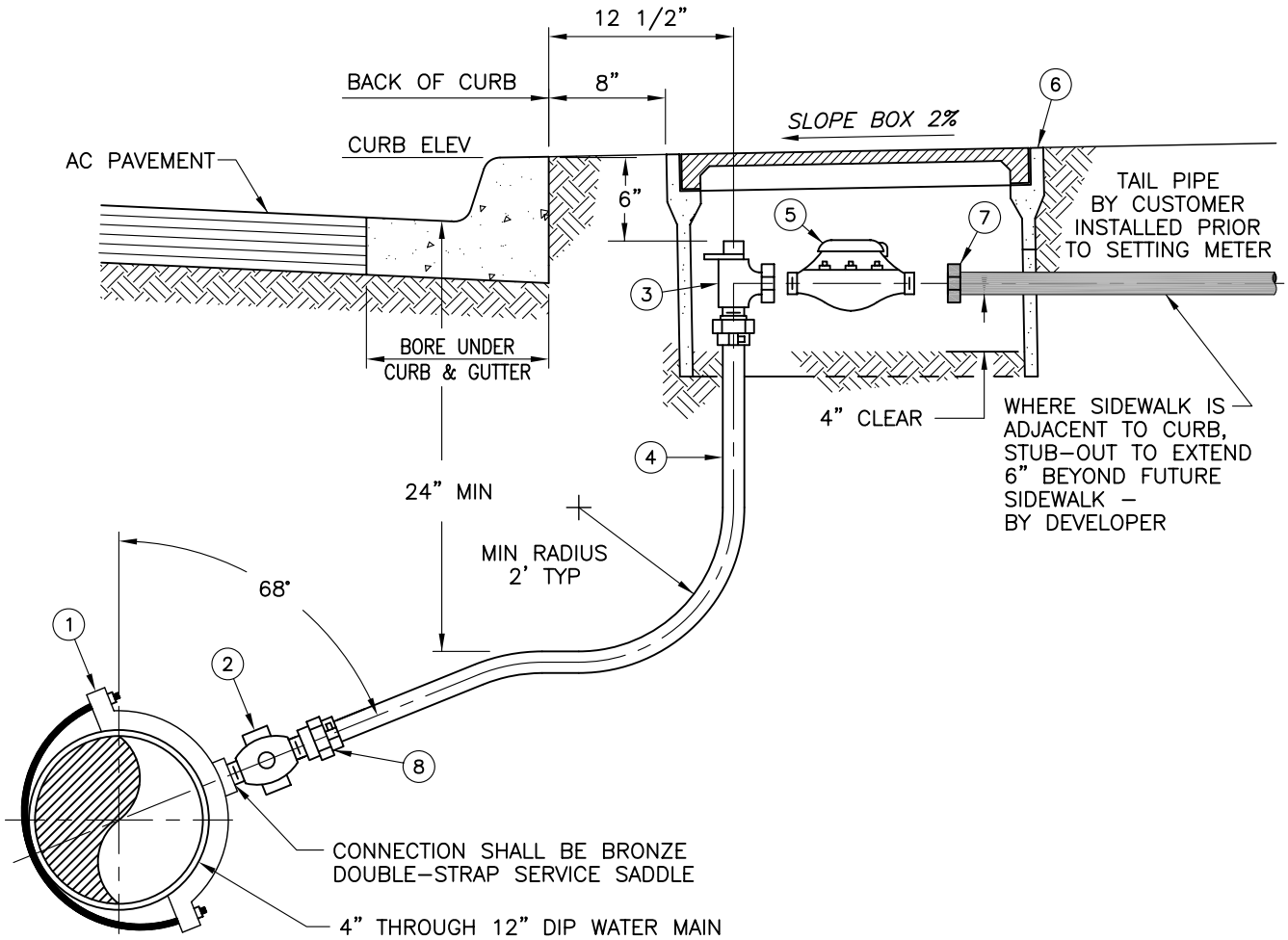

TYPICAL STREET INSTALLATION

BILL OF MATERIALS	
ITEM	QUANTITY
(1) BRONZE DOUBLE-STRAP SERVICE SADDLE (IPT)	1
(2) 1" BRONZE MIPT x MIPT BALL CORP STOP	1
(3) ANGLE BALL METER STOP COMPRESSION x METER COUPLING (WITH 1" x 3/4" ADAPTER FOR 3/4" METER) PER SPECIFICATIONS	1
(4) 1" TUBING, SOFT COPPER, TYPE K)	VARIES
(5) METER INSTALLED BY CITY FORCES	1
(6) METER BOX PER SPECIFICATIONS AND/OR PLANS.	1
(7) 1" OR 3/4" COUPLINGS	1
(8) 1" FIPT x COMPRESSION ADAPTOR	1

NOTES:

1.) METER BOX COVER TO BE CAST IRON WHERE BOX IS IN ALLEY OR DRIVEWAY.
2.) CONTRACTOR SHALL INSTALL METER BOXES WITH READING HOLE AT TIME ANGLE METER STOPS ARE INSTALLED.
3.) CITY WILL FURNISH A TEMPORARY SERVICE METER JUMPER, PRIOR TO INSTALLING METER, UPON PAYMENT OF FEES.
4.) METER BOX TO BE CLEANED BEFORE NEW METER CAN BE INSTALLED BY CITY FORCES.

WATER DISTRIBUTION & TRANSMISSION CONSTRUCTION METHODS	1-INCH WATER SERVICE

CITY OF RIVERSIDE PUBLIC UTILITIES STANDARD DRAWING | DATE: OCT 2009 | CWD-600

	0	1	2	3
APPROV.				
CHECK				
DATE				
DRAWN	WEF			
DATE	10-09			

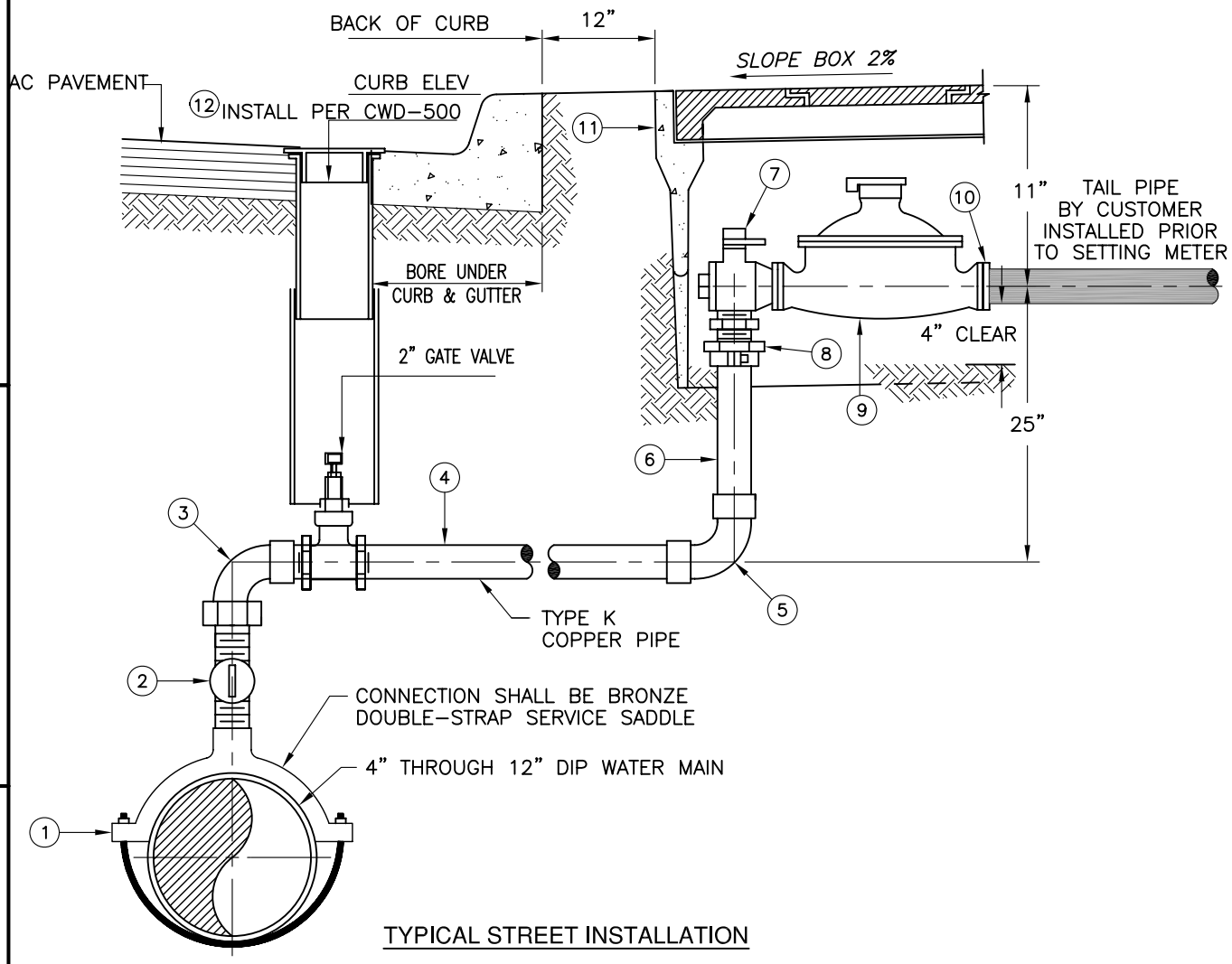

TYPICAL STREET INSTALLATION

BILL OF MATERIALS	
ITEM	QUANTITY
(1) BRONZE DOUBLE-STRAP SERVICE SADDLE (IPT)	1
(2) 2" BALL CORPORATION STOP MIPT x MIPT	1
(3) 2" FIPT/SW BRASS 90° ELL	1
(4) 2" TYPE K COPPER PIPE (SOFT)	VARIABLE
(5) 2" SW/SW COPPER 90° ELL	1
(6) RISER PIPE (2" HARD DRAWN COPPER)	1
(7) 2" ANGLE BALL METER STOP (IPF x METER FLG)	1
(8) 2" COUPLING (COMP x MIPT)	1
(9) 1 1/2" OR 2" METER (INSTALLED BY CITY)	1
(10) 1 1/2" OR 2" METER FLANGE (INSTALLED BY CITY)	1
(11) METER BOX: CONCRETE COVER 2 PC OR STEEL COVER 2 PC	1
(12) 8" GATE VALVE CAP, GALV SPLIT SLEEVE, & 12 GA STL PIPE – PER CWD – 500	1

NOTES:

1.) A STEEL METER BOX LID IS REQUIRED IN ALLEY OR DRIVEWAY.

2.) DOUBLE GASKETS SHALL BE USED ON EACH SIDE OF METER SPACER (JUMPER) UNTIL METER IS INSTALLED BY CITY.

0	DRAWN WEF	DATE 10-09	CHECK	APPROV.
1	DRAWN	DATE	CHECK	APPROV.
2	DRAWN	DATE	CHECK	APPROV.
3	DRAWN	DATE	CHECK	APPROV.

WATER
DISTRIBUTION & TRANSMISSION
CONSTRUCTION METHODS

2-INCH WATER SERVICE

CITY OF RIVERSIDE PUBLIC UTILITIES STANDARD DRAWING | DATE: OCT 2009 | CWD-601

0	1	2	3
DRAWN MMc	DRAWN	DRAWN	DRAWN
DATE 10-'09	DATE	DATE	DATE
CHECK	CHECK	CHECK	CHECK
APPROV.	APPROV.	APPROV.	APPROV.

WATER SERVICE CONNECTION , NOT LIMITED TO HYDRANT CONNECTIONS.

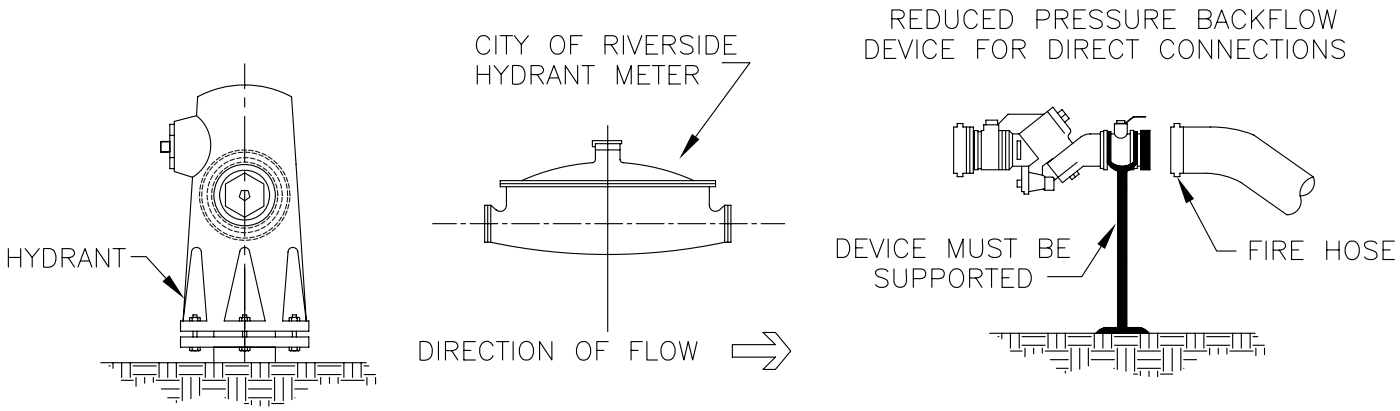

GUIDELINES:

1. AN AIR GAP IS REQUIRED AT SERVICE CONNECTION WHEN:
   a) A REDUCED PRESSURE BACKFLOW DEVICE (RP) IS NOT AVAILABLE.
   b) THE POTABLE WATER SUPPLY IS USED TO SUPPLEMENT A NONPOTABLE OR RECYCLED WATER SUPPLY.
2. A REDUCED PRESSURE BACKFLOW DEVICE (RP) IS REQUIRED WHEN:
   a) AN AIR GAP IS NOT PRACTICAL.
   b) CUSTOMER'S LENGTH OF HOSE EXCEEDS 50'.
   c) WATER IS APPLIED DIRECTLY VIA HOSE.
   d) THERE IS ANY PROCESS OR EQUIPMENT DIRECTLY SUPPLIED VIA CONNECTION.
   e) THERE IS ANY RIDGED PIPING OR VALVE DOWNSTREAM OF CONNECTION.

CONNECTION IS SUBJECT TO APPROVAL OF THE PROGRAM SPECIALIST. CONNECTION AND BACKFLOW DEVICE MUST BE INSPECTED IMMEDIATELY AFTER INSTALLATION. TO SCHEDULE AN APPOINTMENT, CALL 951-351-6320 OR 951-351-6282.

TEMPORARY CONNECTION METER CONTACTS

951-826-5285 - WATER ENGINEERING
951-351-6320 - WATER OPERATIONS/ BACKFLOW
951-351-4350 - WATER MAINTENANCE
951-782-0330 - CUSTOMER SERVICE

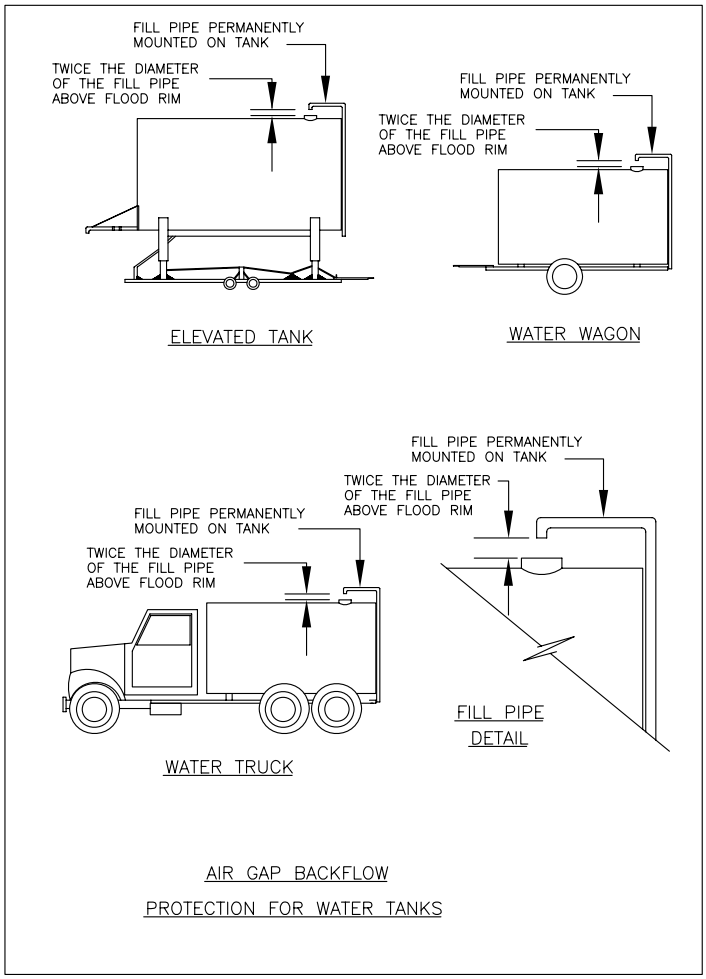

AIR GAP BACKFLOW

PROTECTION FOR WATER TANKS

WATER DISTRIBUTION & TRANSMISSION CONSTRUCTION METHODS	TEMPORARY, EMERGENCY, OR CONSTRUCTION WATER SERVICE/ BACKFLOW PROTECTION	
CITY OF RIVERSIDE PUBLIC UTILITIES STANDARD DRAWING	DATE: OCT 2009	CWD-614

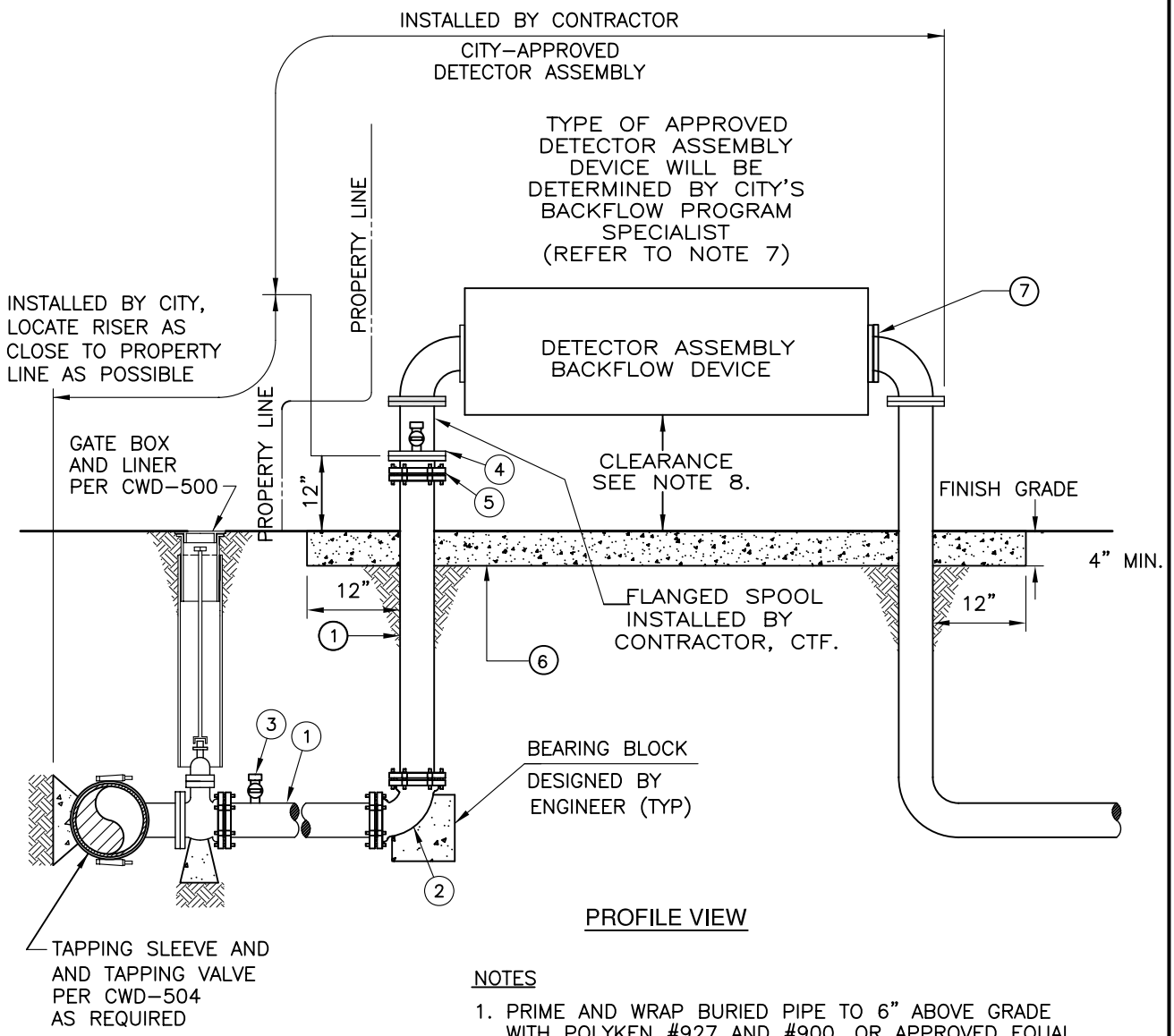

PROFILE VIEW

MATERIALS	
	ITEM
1	DUCTILE IRON PIPE (CLASS 350)
2	90° ELL
3	1" BALL CORPORATION STOP INLET FOR CHLORINATION POINT TO BE CLOSED AND CAPPED AFTER SUCCESSFUL DISINFECTION.
4	TEMPORARY BLIND FLANGE WITH 1" IPT TAP AND 1" BALL CORPORATION STOP FOR SAMPLE.
5	FLANGE X MECHANICAL JOINT ADAPTOR, AS REQUIRED.
6	4" MIN. CONCRETE SLAB–NECESSARY FOR EROSION PREVENTION
7	TEST PLATE REQUIRED FOR PRESSURE TEST.

NOTES

1. PRIME AND WRAP BURIED PIPE TO 6" ABOVE GRADE WITH POLYKEN #927 AND #900, OR APPROVED EQUAL.
2. CITY FORCES WILL BLIND FLANGE CONNECTION POINT. WATER INSPECTOR IS TO BE PRESENT WHEN BLIND FLANGE IS REMOVED AND DETECTOR ASSEMBLY IS INSTALLED.
3. FACILITIES TO BE DISINFECTED PER SPECIFICATION 205, PART 5.
4. CONTRACTOR TO SWAB CONNECTING VALVES WITH 600 PPM CHLORINE WHEN MAKING CONNECTION.
5. CONTRACTOR TO PAINT ALL ABOVE GRADE PIPING AND DETECTOR ASSEMBLY.
6. FOR 10" DETECTOR ASSEMBLY INSTALL 12" LATERAL AND PIPING. CUSTOMER TO SUPPLY 12" x 10" FLANGED REDUCERS ON BOTH SIDES OF DETECTOR ASSEMBLY.
7. CONTACT CITY BACKFLOW PROGRAM SPECIALIST FOR DETECTOR ASSEMBLY SPECIFICATION, AND FOR INSPECTION AND TESTING IMMEDIATELY AFTER INSTALLATION AT 951–351–6320.
8. FOR DETECTOR ASSEMBLY CLEARANCE REQUIREMENTS REFER TO CWD–616–1 AND CWD–617.
9. RESTRAIN ALL JOINTS WITH APPROVED RESTRAINT ASSEMBLY.

3	DRAWN	DATE	CHECK	APPROV.
2	DRAWN	DATE	CHECK	APPROV.
1	DRAWN	DATE	CHECK	APPROV.
0	DRAWN MMc	DATE 10–'09	CHECK	APPROV.

WATER
DISTRIBUTION & TRANSMISSION
CONSTRUCTION METHODS

4" THRU 12" ABOVE GROUND FIRE SERVICE

CITY OF RIVERSIDE PUBLIC UTILITIES STANDARD DRAWING | DATE: OCT 2009 | CWD-615

APPROV.	CHECK	DATE	DRAWN	3
APPROV.	CHECK	DATE	DRAWN	2
APPROV.	CHECK	DATE	DRAWN	1
APPROV.	CHECK	DATE 10-'09	DRAWN MMc	0

TYPICAL BACKFLOW DEVICE CONFIGURATION

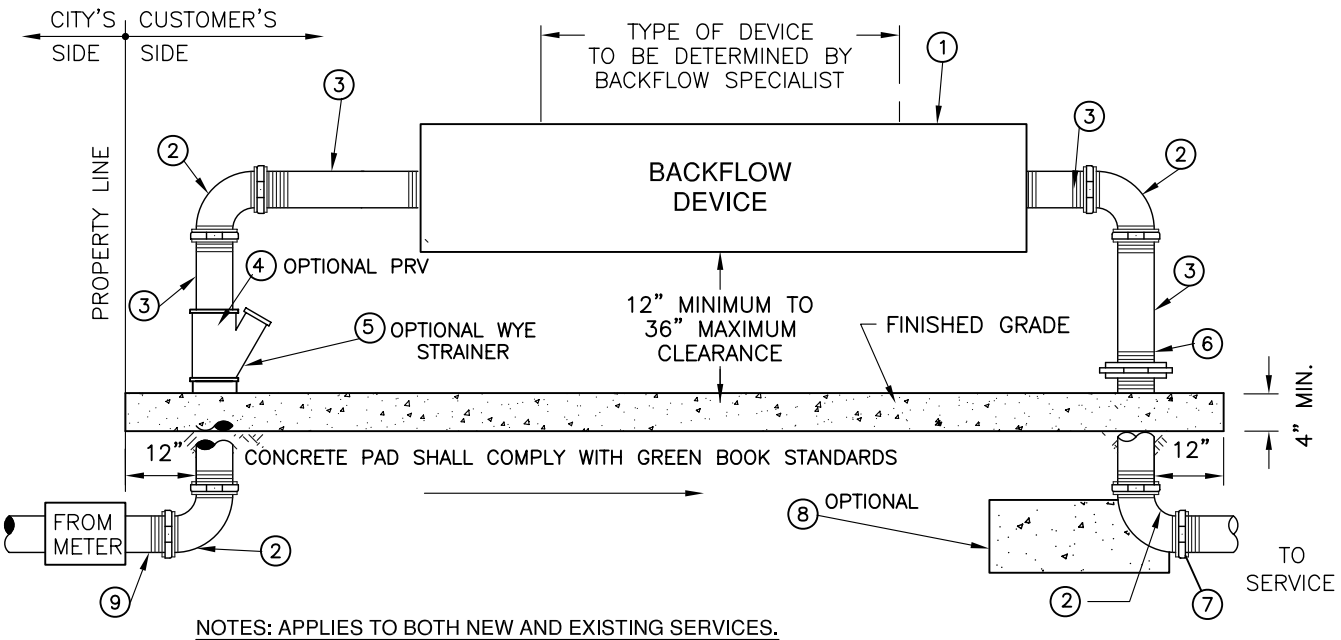

NOTES: APPLIES TO BOTH NEW AND EXISTING SERVICES.

1. PRIOR TO INSTALLATION, LOCATION OF THE BACKFLOW DEVICE SHALL BE SUBJECT TO THE APPROVAL OF THE PROGRAM SPECIALIST 951-351-6320/6282. DEVICE SHALL BE LOCATED AS CLOSE TO METER AS PRACTICAL (MIN. 18", MAX. 24" BACK OF PROPERTY LINE.)
2. ANY DEVIATION FROM NOTE #1 IS SUBJECT TO CONDITIONS AS DESCRIBED WITHIN CWD 616-2
3. INSPECTION OF PLUMBING BETWEEN METER AND BACKFLOW DEVICE IS REQUIRED PRIOR TO BACKFILLING OR POURING CONCRETE.
4. MATERIALS SHALL BE IN COMPLIANCE WITH THE APPROVED MATERIALS SPECIFIED BELOW.
5. THE DEVICE MUST BE INSPECTED AND TESTED IMMEDIATELY AFTER INSTALLATION. TO SCHEDULE AN APPOINTMENT CALL 951-351-6320/6282.

ITEM	EACH	DESCRIPTION
1	1	BACKFLOW DEVICE
2	4	90 DEGREE ELBOW, BRASS OR HARD DRAWN COPPER
3	4	RISER & NIPPLES, BRASS OR HARD DRAWN COPPER
4	1	PRV VALVE (FOR PRESSURE IN EXCESS OF 80 PSI)

ITEM	EACH	DESCRIPTION
5	1	OPTIONAL WYE STRAINER
6	1	BRASS OR COPPER UNION(SEE NOTE *)
7	1	P.V.C. MALE ADAPTER (FEMALE THREADED x MALE SLIP)
8	1	CONCRETE THRUST BLOCK (OPTIONAL)
9	1	SERVICE LINE, BRASS OR HARD DRAWN COPPER

ADEQUATE AND SAFE CLEARANCE MUST BE PROVIDED TO PERMIT TESTING AND REPAIR WORK

MINIMUM CLEARANCE SCHEDULE			
SIZE	A	B	C
3/4" THRU 2 1/2"	12"	18"	12"

NOTE *

A SECOND UNION ON OPPOSITE RISER MAY BE REQUIRED IF CLEARANCE REQUIREMENTS ARE NOT MAINTAINED.

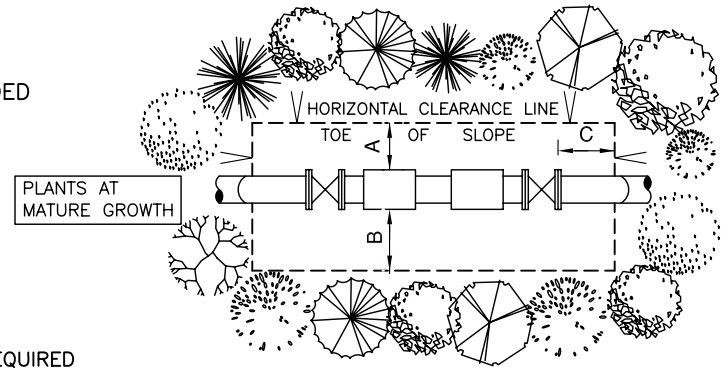

OVERHEAD VIEW OF CLEARANCE REQUIREMENTS

WATER
DISTRIBUTION & TRANSMISSION
CONSTRUCTION METHODS

BACKFLOW PREVENTION ASSEMBLY 3/4"-2 1/2" ABOVE GROUND INSTALLATION

RIVERSIDE PUBLIC UTILITIES STANDARD DRAWING | DATE: OCT 2009 | CWD-616-1

0	1	2	3
DRAWN MN	DRAWN	DRAWN	DRAWN
DATE 10/2009	DATE	DATE	DATE
CHECK	CHECK	CHECK	CHECK
APPROV.	APPROV.	APPROV.	APPROV.

PRIVATE SERVICE LINE ENCASEMENT

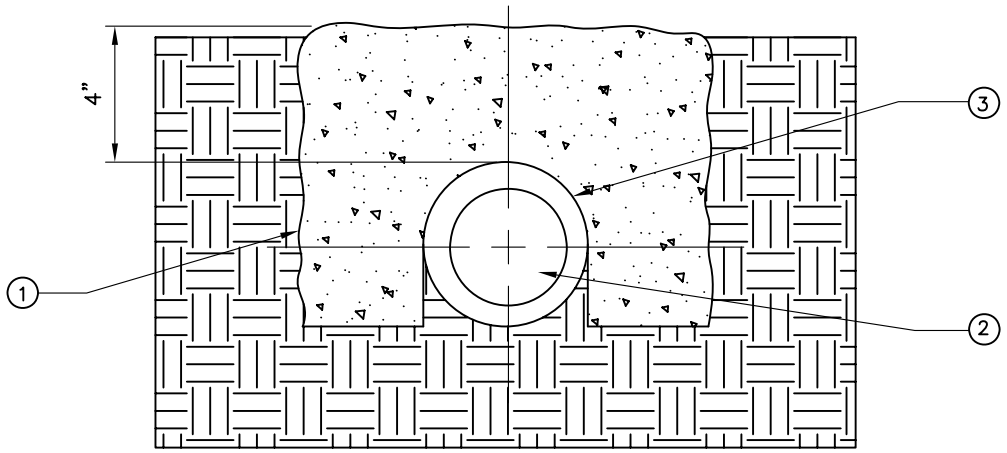

ITEM	DESCRIPTION
1	4" CONCRETE ENCASEMENT ALL SIDES.
2	BRASS OR COPPER WATER SERVICE LINE
3	CORROSION BARRIER

IF DETERMINED BY PUBLIC UTILITIES THAT A BACKFLOW DEVICE IS UNABLE TO BE INSTALLED IN ACCORDANCE WITH CWD–616–1, NOTE 1, AN ALTERNATIVE LOCATION MAY BE APPROVED AND THE FOLLOWING CONDITIONS SHALL APPLY.

CONDITIONS:

1. A DRAWING DEPICTING THE PROPOSED PATH OF PIPING FROM THE WATER METER TO THE BACKFLOW DEVICE AND THE FINAL LOCATION OF DEVICE MUST BE SUBMITTED TO PUBLIC UTILITIES FOR APPROVAL.
2. ONCE APPROVED, INSTALLER MUST COORDINATE WITH THE BACKFLOW PROGRAM SPECIALIST TO OVERSEE, INSPECT & DOCUMENT THE INSTALLATION. CORROSION BARRIER TO BE INSPECTED PRIOR TO POURING OF CONCRETE.
3. MATERIALS SHALL REMAIN IN COMPLIANCE AS SPECIFIED WITHIN CWD–616–1.
4. MATERIALS SHALL BE IN COMPLIANCE WITH THE APPROVED MATERIALS SPECIFIED ON THE TABLE ABOVE.

WATER DISTRIBUTION & TRANSMISSION CONSTRUCTION METHODS	BACKFLOW PREVENTION ASSEMBLY ALTERNATIVE LOCATION INSTALLATION	
RIVERSIDE PUBLIC UTILITIES STANDARD DRAWING	DATE: OCT 2009	CWD-616-2

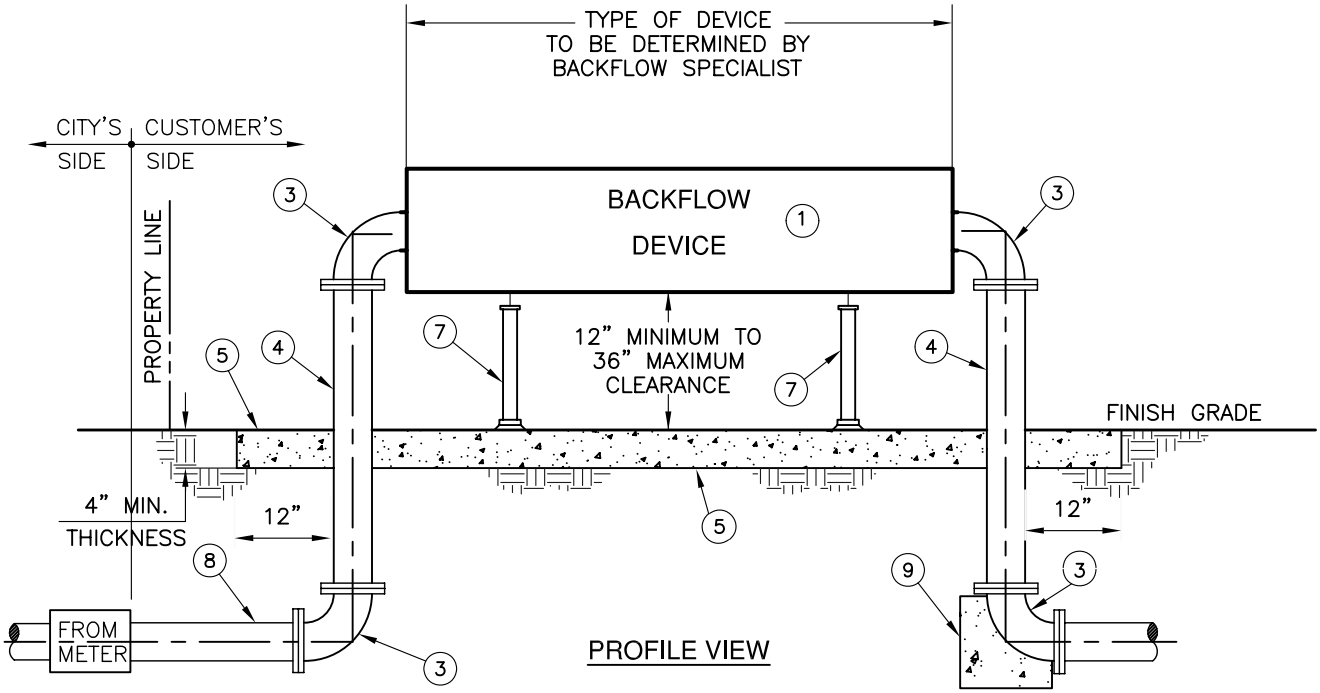

NOTES:

1. PRIOR TO INSTALLATION, LOCATION OF THE BACKFLOW DEVICE SHALL BE SUBJECT TO THE APPROVAL OF THE BACKFLOW PROGRAM SPECIALIST 951-351-6320/6282. DEVICE SHALL BE LOCATED AS CLOSE TO METER AS PRACTICAL (MIN. 18", MAX. 24" BACK OF RW)
2. PLACE BOTTOM OF DEVICE A MINIMUM OF 12 INCHES AND NOT MORE THAN 36 INCHES ABOVE FINISH GRADE.
3. INSPECTION OF PLUMBING IS REQUIRED PRIOR TO CONCRETE THRUST BLOCK AND/OR ABOVE GROUND SLAB BEING POURED.
4. MATERIALS SHALL BE IN COMPLIANCE WITH THE APPROVED MATERIALS SPECIFIED BELOW.
5. THE DEVICE MUST BE INSPECTED AND TESTED IMMEDIATELY AFTER INSTALLATION. TO SCHEDULE AN APPOINTMENT CALL 951-351-6320/6282.

ITEM	EACH	DESCRIPTION
1	1	BACKFLOW DEVICE (TYPE OF DEVICE TO BE DETERMINED BY BACKFLOW PROGRAM SPECIALIST)
3	2	90 DEGREE ELBOW
4	2	FLANGED RISER PIPE
5		CONCRETE PAD (NECESSARY TO PREVENT EROSION)

ITEM	EACH	DESCRIPTION
7	2	PIPE SUPPORT
8	1	SERVICE LINE (NO PVC)
9	1	CONCRETE THRUST BLOCK

ADEQUATE AND SAFE CLEARANCE MUST BE PROVIDED TO PERMIT TESTING AND REPAIR WORK

MINIMUM CLEARANCE SCHEDULE			
SIZE	* A	B	C
3" AND UP	24"	24"	12"

*REFERENCE TO INCLINE AND DECLINE SLOPES

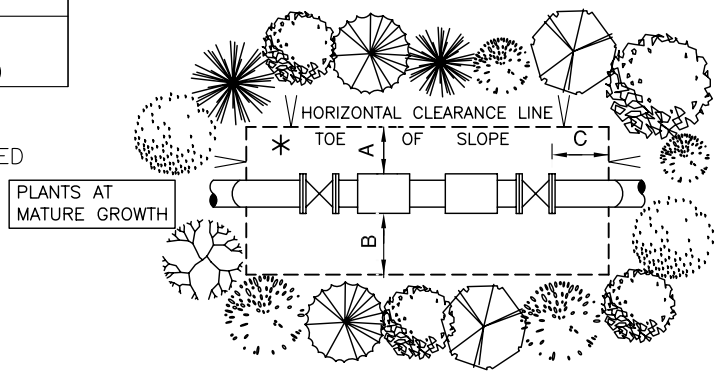

OVERHEAD VIEW OF CLEARANCE REQUIREMENTS

WATER DISTRIBUTION & TRANSMISSION CONSTRUCTION METHODS	BACKFLOW PREVENTION ASSEMBLY 3" & LARGER ABOVE GROUND INSTALLATION

RIVERSIDE PUBLIC UTILITIES DEPT. STANDARD | DATE: OCT 2009 | CWD-617

3	DRAWN	DATE	CHECK	APPROV.
2	DRAWN	DATE	CHECK	APPROV.
1	DRAWN	DATE	CHECK	APPROV.
0	DRAWN MN	DATE 10/2009	CHECK	APPROV.

NOTE: SEE CWD-620-2 FOR MATERIAL CALL-OUT.

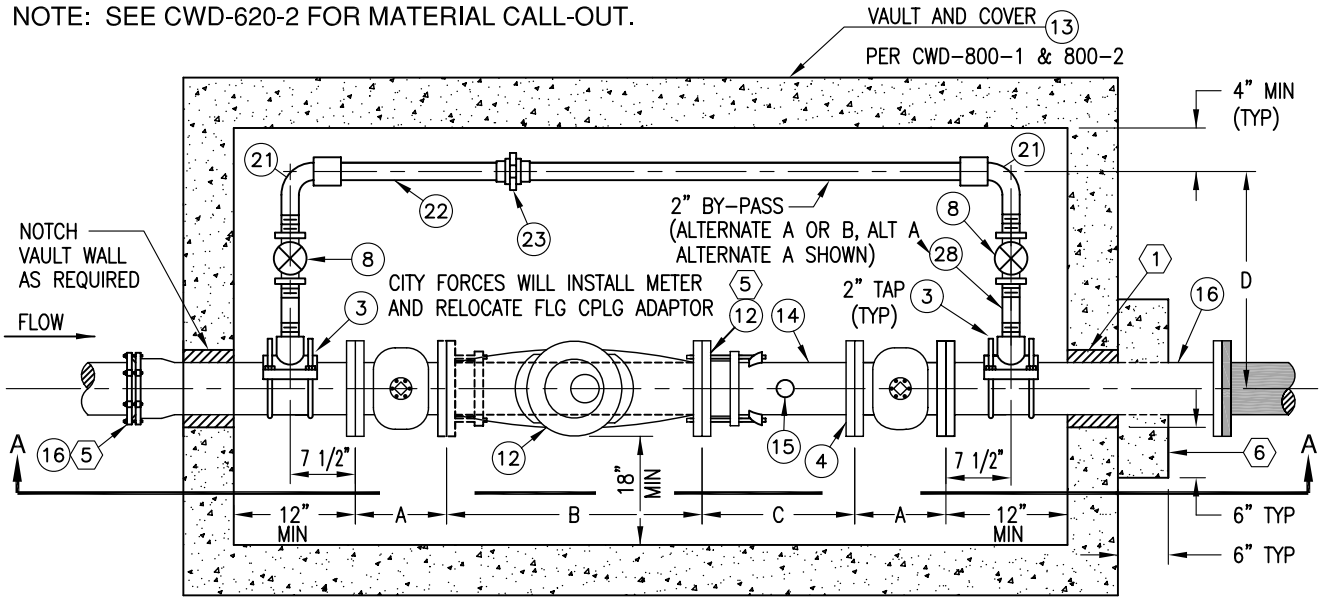

PLAN VIEW

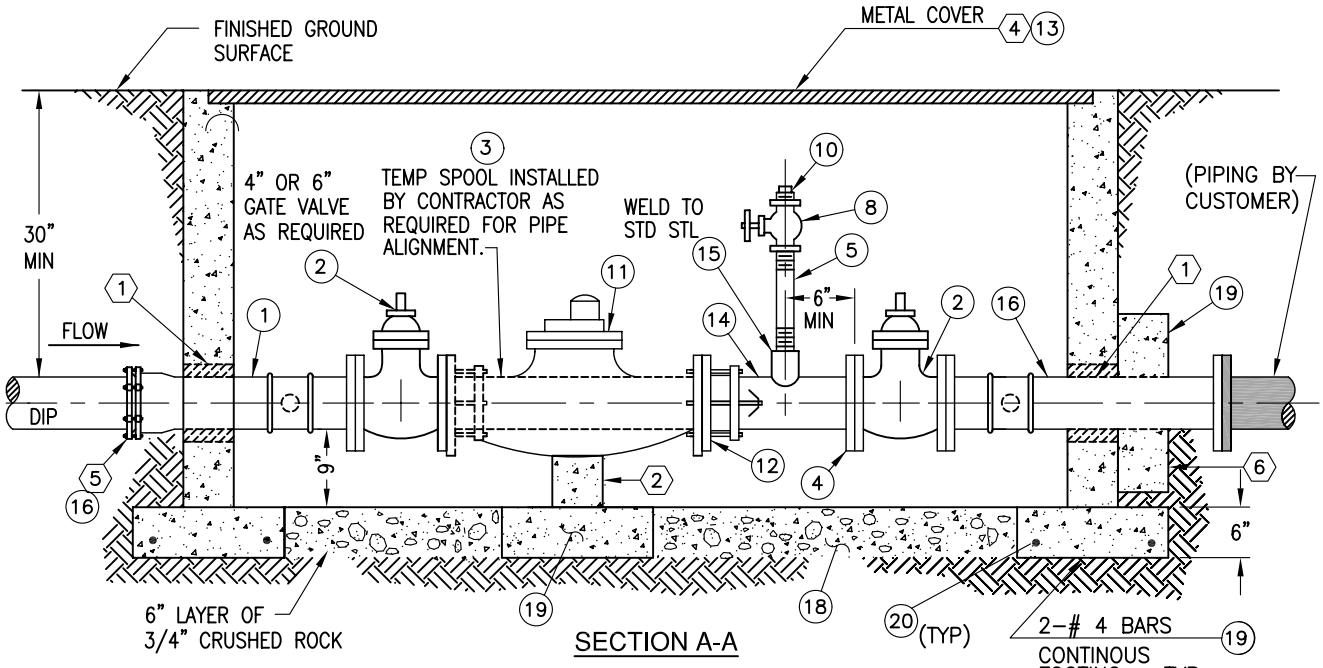

SECTION A-A

GENERAL NOTES:

1) CONTRACTOR SHALL PAINT PIPING PRIOR TO INSTALLATION OF METER.

TYPICAL DIMENSIONS				
SERVICE SIZE	A	B	C	D
3 IN.	9"	24"	29"±	11"
4 IN.	9"	24"	24±	11 1/2"
6 IN.	10 1/2"	36 1/2"	13"±	12 1/2"

CONSTRUCTION NOTES:

1. DRY-PACK PIPE OPENINGS.
2. SUPPORT COMPOUND METER ON CONCRETE PAD WITH CONCRETE BLOCK.
3. CONTRACTOR SHALL INSTALL ALL PIPE, FITTINGS, AND MATERIALS BETWEEN THE TAPPING GATE AND "PIPING BY CUSTOMER", INCLUDING TEMPORARY FLANGED COUPLING CONNECTION AT INFLUENT VALVE.
4. ADJUST VAULT AND COVER TO MEET SIDEWALK AND CURB GRADE. PAINT PER SECTION 310.
5. PROVIDE JOINT RESTRAINTS PER CONSTRUCTION SPECIFICATIONS.
6. POUR PCC 480-C-2000 CONCRETE THRUST COLLAR AGAINST WALL OF VAULT.

WATER DISTRIBUTION & TRANSMISSION CONSTRUCTION METHODS	3", 4" AND 6" COMPOUND METER WATER SERVICE

CITY OF RIVERSIDE PUBLIC UTILITIES STANDARD DRAWING | DATE: OCT 2009 | CWD-620-1

APPROV.	CHECK	DATE	DRAWN	3	APPROV.	CHECK	DATE	DRAWN	2	APPROV.	CHECK	DATE	DRAWN	1	APPROV.	CHECK	DATE 10-09	DRAWN WEF	0

BILL OF MATERIALS				
ITEM	QUANTITES			REFERENCE
	3" METER	4" METER	6" METER	
(1) DIA x 18" ADAPTER, FLG x MJ	1–(4" DIA)	1	1	
(2) GATE VALVE, DIA x FLG x FLG	2–(4" DIA)	2	2	
(3) DIA x 2" BRONZE SERVICE SADDLE	2–(4" DIA)	2	2	
(4) WELD FLANGE x DIA	1	1	1	
(5) 2" x 12" BRASS NIPPLE	1	1	1	
(6) 4" x 3" BRASS BUSHING	2	NA	NA	
(7) 3" x 6" BRASS NIPPLE	1	NA	NA	
(8) 2" GATE VALVE – BRONZE	3	3	3	
(9) 4" SCREW FLANGE	2–(4" DIA)	NA	NA	
(10) 2" BRASS PLUG	1	1	1	
(11) COMPOUND METER, DIA x FLG x FLG	1	1	1	PUR REQ
(12) DIA x FLANGED COUPLING ADAPTER	1	1	1	
(13) VAULT AND COVER	1	1	1	CWD-800-1/2
(14) STEEL PIPE, DIA x (SCHEDULE 40)	3 LNR FT CTF			
(15) 2" HEAVY BLACK COUPLING	1	1	1	
(16) DIA X 36" DIP SPOOL FLG x FLG	1–(4" DIA)	1	1	
(17) 3" SCREW FLANGE	2	NA	NA	
(18) 3/4" CRUSHED ROCK	16 CU FT			
(19) CONCRETE PCC 480–C–2000	15 CU FT			
(20) NO. 4 REBAR	48 LNR FT±			
2" BY–PASS (ALT A)				
(21) 2" x 90° ELL SW x MIPT	2	2	2	
(22) 2" COPPER PIPE, SOFT	7 LNR FT ±			
(23) 2" BRASS UNION	1	1	1	
(24) 2" x 3" BRASS NIPPLE	2	2	2	
2" BY–PASS (ALT B)				
(25) 2" x 90° STREET ELL	2	2	2	
(26) 2" BRASS PIPE	7 LNR FT ±			
(27) 2" BRASS UNION	1	1	1	
(28) 2" x 3" GALV NIPPLE	2	2	2	

3	DRAWN	DATE	CHECK	APPROV.
2	DRAWN	DATE	CHECK	APPROV.
1	DRAWN	DATE	CHECK	APPROV.
0	DRAWN WEF	DATE 10–09	CHECK	APPROV.

WATER
DISTRIBUTION & TRANSMISSION
CONSTRUCTION METHODS

BILL OF MATERIALS FOR 3", 4" AND 6" COMPOUND METER WATER SERVICE

CITY OF RIVERSIDE PUBLIC UTILITIES STANDARD DRAWING | DATE: OCT 2009 | CWD-620-2

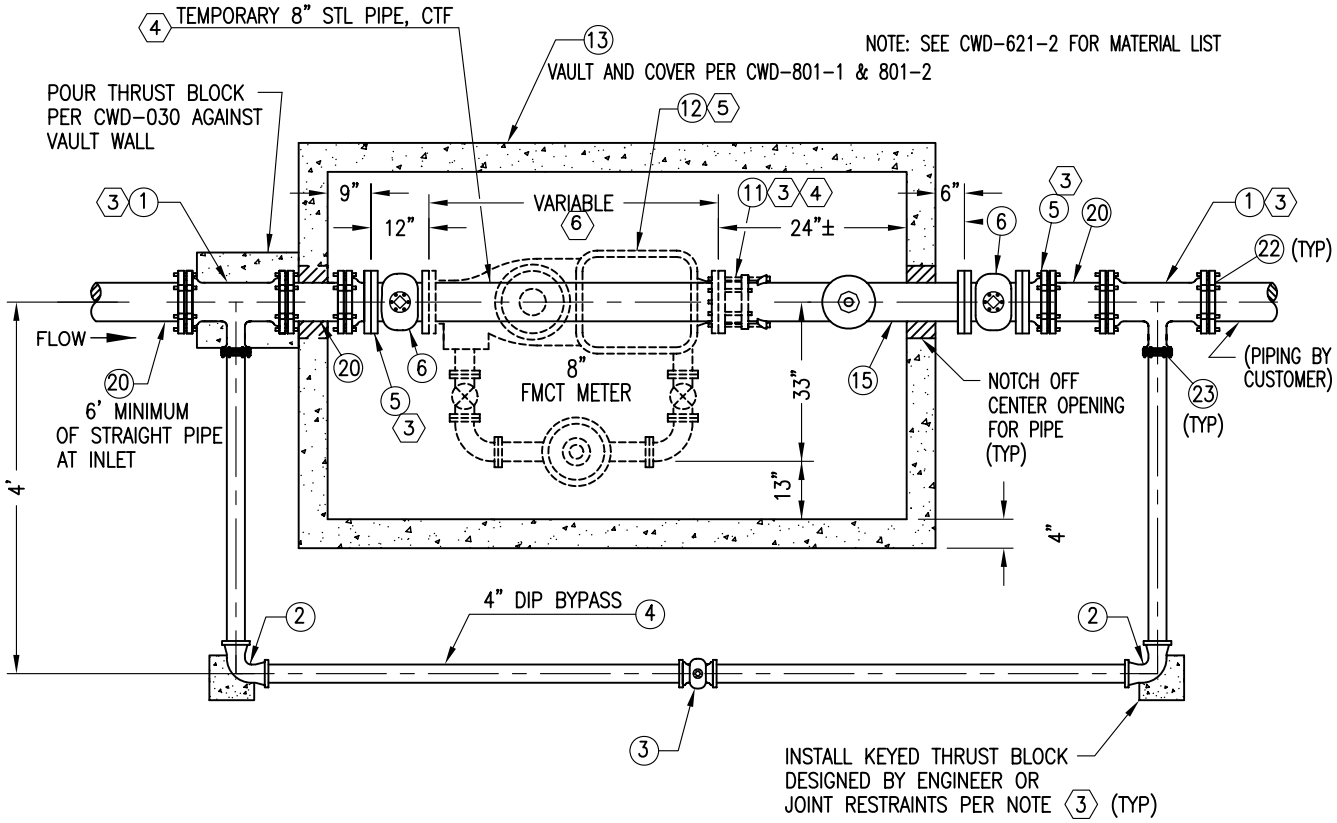

PLAN VIEW

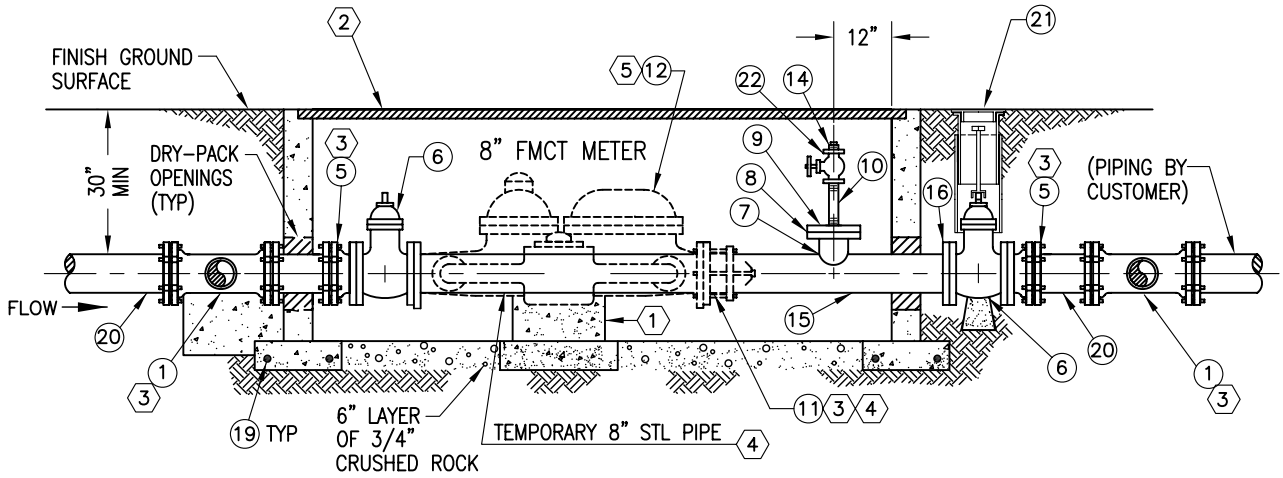

PROFILE VIEW

GENERAL NOTES:

1. SUPPORT METER ON CONCRETE PAD AND CONCRETE BLOCK.
2. ADJUST VAULT AND COVER TO MEET SIDEWALK AND CURB GRADE. PAINT PER CONSTRUCTION SPECIFICATION SECTION 310.
3. PROVIDE JOINT RESTRAINTS PER CONSTRUCTION SPECIFICATION.
4. CONTRACTOR SHALL INSTALL ALL PIPE, FITTINGS, AND MATERIALS BETWEEN THE TAPPING GATE AND "PIPING BY CUSTOMER", INCLUDING TEMPORARY FLANGE COUPLING CONNECTION AT THE INFLUENT VALVE. LOCATION.
5. CITY FORCES WILL FURNISH AND INSTALL 8" FMCT METER AND FAB METER READING LID.
6. VARIABLE LENGTH IS PER MANUFACTURER'S REQUIREMENTS.

WATER DISTRIBUTION & TRANSMISSION CONSTRUCTION METHODS	8" FMCT WATER SERVICE

CITY OF RIVERSIDE PUBLIC UTILITIES STANDARD DRAWING | DATE: OCT 2009 | CWD-621-1

3	DRAWN	DATE	CHECK	DATE	APPROV.
2	DRAWN	DATE	CHECK	DATE	APPROV.
1	DRAWN	DATE	CHECK	DATE	APPROV.
0	DRAWN WEF	DATE 10-09	CHECK		

BILL OF MATERIALS		
ITEM	QUANTITY	REFERENCE
1 8" x 4" TEE MJ X MJ	2	
2 4" – 90° ELL MJ X MJ	2	
3 4" RW GATE VALVE MJ X MJ	1	
4 4" DI PIPE	23 FT±	
5 8" FLG X MJ ADAPTER	2	
6 8" GATE VALVE F X F	2	
7 6" STL PIPE (SCHEDULE 40)	1 FT	
8 6" WELD FLANGE	1	
9 6" BLIND FLANGE W/2" IPT TAP	1	
10 2" X 12" GALV NIPPLE	1	
11 8" FLANGED COUPLING ADAPTER	1	
12 8" COMPOUND METER	1	
13 VAULT AND COVER	1	CWD-801-1/2
14 2" BRASS PLUG	1	
15 8" STL PIPE (SCHEDULE 40)	7 FT±	
16 8" WELD FLANGE	1	
17 CONCRETE PCC 480-C-2000	20 CU FT±	
18 3/4" CRUSHED ROCK	28 CU FT	
19 NO 4 REBAR	64 FT±	
20 8" DI PIPE	2 FT	
21 8" GATE BOX MATERIAL	1	CWD-500
22 2" GATE VALVE – BRONZE	1	

	APPROV.	CHECK	DATE	DRAWN
3				
2				
1				
0			10-09	WEF

WATER
DISTRIBUTION & TRANSMISSION
CONSTRUCTION METHODS

BILL OF MATERIALS FOR 8" FMCT WATER SERVICE

CITY OF RIVERSIDE PUBLIC UTILITIES STANDARD DRAWING | DATE: OCT 2009 | CWD-621-2

NOTE: SEE CWD-622-2 FOR MATERIALS LIST

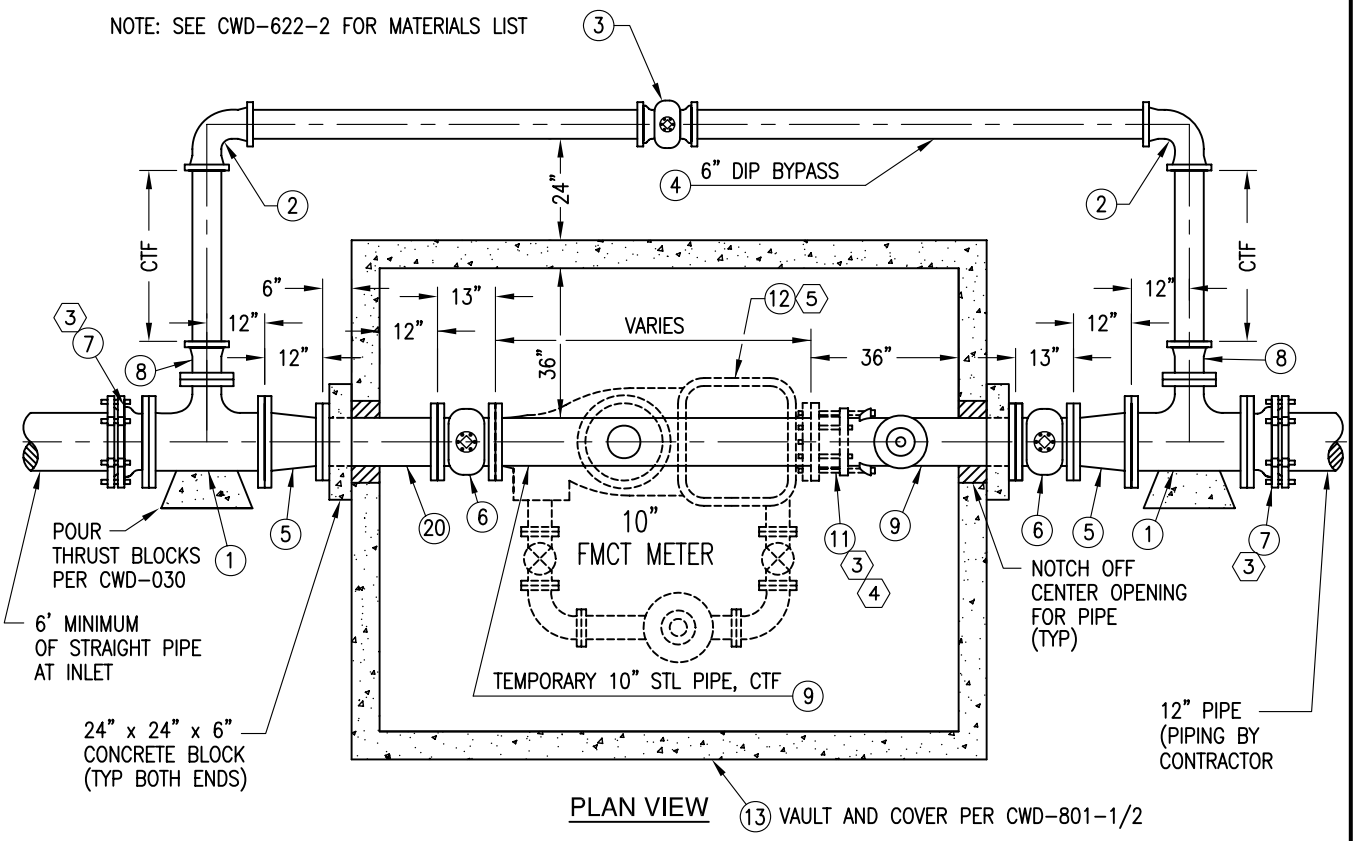

PLAN VIEW

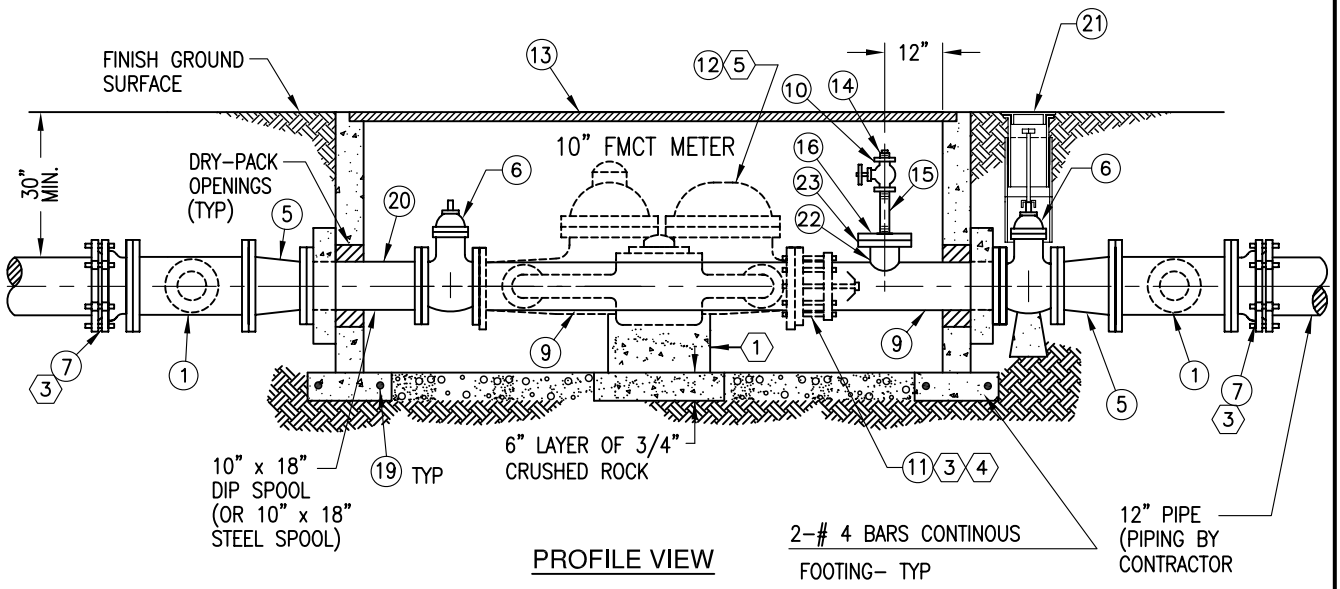

PROFILE VIEW

GENERAL NOTES:

1. SUPPORT METER ON CONCRETE PAD AND CONCRETE BLOCK.
2. ADJUST VAULT AND COVER TO MEET SIDEWALK AND CURB GRADE. PAINT PER CONSTRUCTION SPECIFICATION, SECTION 310.
3. PROVIDE JOINT RESTRAINTS, PER CONSTRUCTION SPECIFICATION.
4. CONTRACTOR SHALL INSTALL ALL PIPE, FITTINGS, AND MATERIALS BETWEEN THE TAPPING GATE AND "PIPING BY CONTRACTOR", INCLUDING TEMPORARY FLANGE COUPLING CONNECTION AT INFLUENT VALVE.
5. CITY FORCES WILL FURNISH AND INSTALL 10" COMPOUND METER AND FAB. METER READING LID.

3	DRAWN	DATE	CHECK	APPROV.
2	DRAWN	DATE	CHECK	APPROV.
1	DRAWN	DATE	CHECK	APPROV.
0	DRAWN WEF	DATE 10-09	CHECK	APPROV.

WATER
DISTRIBUTION & TRANSMISSION
CONSTRUCTION METHODS

10" DOMESTIC WATER SERVICE

CITY OF RIVERSIDE PUBLIC UTILITIES STANDARD DRAWING | DATE: OCT 2009 | CWD-622-1

BILL OF MATERIALS		
ITEM	QUANTITY	REFERENCE
1 12" x 6" TEE F/F*	2	
2 6" 90° ELL RT	2	
3 6" RW GATE VALVE MJ X MJ	1	
4 6" DI PIPE	20 FT±	
5 12" x 10" REDUCER F/F	2	
6 10" GATE VALVE F/F	2	
7 12" FLG X MJ ADAPTER	2	
8 6" F/MJ ADAPTER	2	
9 10" STL PIPE (SCHEDULE 40)	10 FT±	
10 2" BRONZE GATE VALVE	1	
11 10" FLANGE COUPLING ADAPTER	1	
12 10" COMPOUND METER	1	
13 VAULT AND COVER	1	CWD-802-1/2
14 2" BRASS PLUG	1	
15 2" X 12" GALV NIPPLE	1	
16 6" BLIND FLG W/2" IPT TAP	1	
17 CONCRETE PCC 480-6-2000	40 CU FT	
18 3/4" CRUSHED ROCK	40 CU FT	
19 NO 4 REBAR	64 FT±	
20 10" x 18" DIP SPOOL, F/F	ALTERNATE FOR STEEL	
21 8" GATE BOX MATERIAL	1	
22 6" STL PIPE (SCHEDULE 40)	1 FT	
23 6" WELD FLG	1	

* 12" x 12" TEE F/F WITH 12" x 6" REDUCER MAY BE USED INSTEAD OF 12" x 12" x 6" TEE.

3	DRAWN	DATE	CHECK	APPROV.
2	DRAWN	DATE	CHECK	APPROV.
1	DRAWN	DATE	CHECK	APPROV.
0	DRAWN WEF	DATE 10-09	CHECK	APPROV.

WATER
DISTRIBUTION & TRANSMISSION
CONSTRUCTION METHODS

BILL OF MATERIALS FOR 10" COMPOUND WATER SERVICE

CITY OF RIVERSIDE PUBLIC UTILITIES STANDARD DRAWING | DATE: OCT 2009 | CWD-622-2

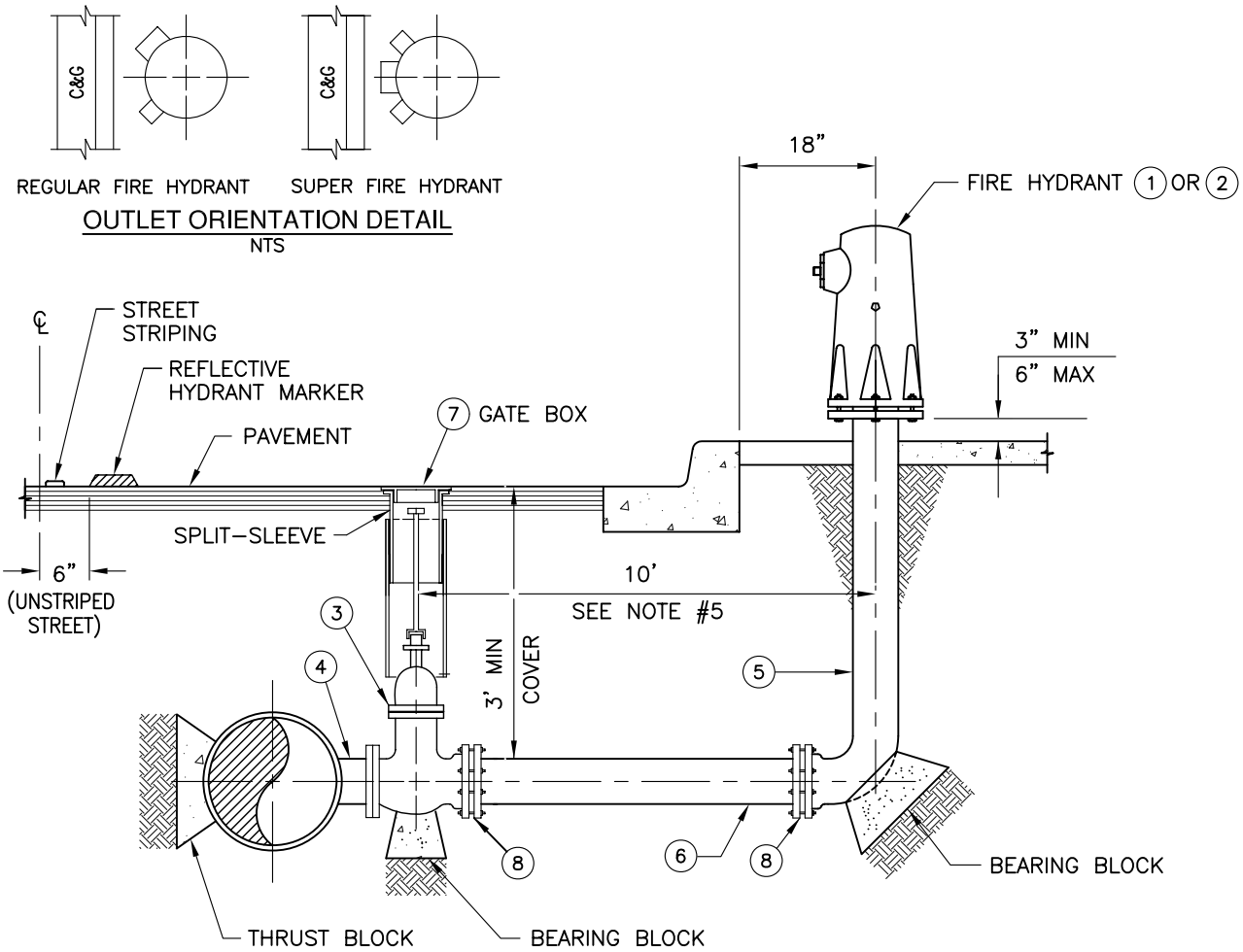

NOTES

1.) REGULAR OR SUPER HYDRANT IN ACCORDANCE WITH PLAN AND SPECIFICATIONS.

2.) BREAK-OFF BOLTS REQUIRED BETWEEN FIRE HYDRANT AND FLANGE IN ACCORDANCE WITH SPECIFICATIONS. INSTALL WITH NUT ON TOP.

3.) DI BURY AND FIRE HYDRANT FLANGE SHALL BE 6-HOLE.

4.) FIRE HYDRANT OUTLETS SHALL FACE STREET.

5.) FIRE HYDRANT VALVE SHALL BE A MINIMUM OF 10 FEET FROM HYDRANT.

6.) THRUST AND BEARING BLOCKS PER CWD-030

7.) FURNISH AND INSTALL A STIMSONITE MODEL 88AB TWO-WAY BLUE REFLECTIVE FIRE HYDRANT MARKER DIRECTLY OPPOSITE HYDRANT, LOCATE MARKER ON HYDRANT SIDE OF STREET CENTERLINE IN ACCORDANCE WITH THE ABOVE DETAIL, WITH REFLECTIVE SIDE FACING ONCOMING TRAFFIC, PROVIDE 2 - MARKERS FOR HYDRANTS INSTALLED AT INTERSECTIONS.

8.) ALL PIPE TO BE POLYETHENE-ENCASED PER SPECIFICATION SECTION 306.

9.) IF MAIN LINE MUST BE WET TAPPED, SEE CWD-504.

BILL OF MATERIALS

ITEM	QUANTITY	REFERENCE
1 REGULAR FIRE HYDRANT OUTLETS: 1 - 2 1/2", 1 - 4"	1	
2 SUPER FIRE HYDRANT OUTLETS: 2 - 2 1/2", 1 - 4"		
3 6" GATE VALVE, FLG/MJ, RW	1	CWD-500
4 MAINLINE X 6" TEE	1	
5 6" DI BURY, FLG/MJ- BREAK AWAY IS NOT ALLOWED	1	
6 6" DI PIPE	1	
7 8" GATE BOX CAP, GALV SPLIT-SLEEVE, AND 12 GA STL PIPE	1	CWD-515
8 APPROVED RESTRAINED SYSTEM	2	

0	DRAWN WEF	DATE 10-09	CHECK
1	DRAWN	DATE	CHECK	APPROV.
2	DRAWN	DATE	CHECK	APPROV.
3	DRAWN	DATE	CHECK	APPROV.

WATER
DISTRIBUTION & TRANSMISSION
CONSTRUCTION METHODS

REGULAR AND SUPER FIRE HYDRANT DETAIL

CITY OF RIVERSIDE PUBLIC UTILITIES STANDARD DRAWING | DATE: OCT 2009 | CWD-700

4' - 6" x 8' - 6" TRAFFIC VAULT X 47" DEEP

GENERAL NOTES:

- DESIGNED IN ACCORDANCE WITH AASHTO H-20-44 TRAFFIC BRIDGE LOADING USING 5,500 PSI [37.92MPa] COMPRESSIVE STRENGTH CONCRETE AND 60,000 PSI [413.2MPa] YIELD STRENGTH ASTM A-706 STEEL REINFORCEMENT.
- COVER DESIGNED FOR H-20-44 TRAFFIC LOADING FOR USE IN OFF STREET LOCATIONS.
- HANDHOLE TO BE PLACED ON A 6" [15cm] BASE OF CRUSHER RUN FOR EASE OF INSTALLATION AND EVEN LOAD DISTRIBUTION.
- MINIMUM SOIL BEARING CAPACITY IS HEREBY ASSUMED TO BE 2000 PSF.
- INSTALLATION OF MANHOLES, VAULTS, HANDHOLES.
- ALL PERMISSIBLE TOLERANCES SHALL BE MET PER THE REQUIREMENTS OF THE MANUFACTURER.

1. 42" LOWER SECTION.
2. TRAFFIC COVER ASSEMBLY. INCLUDES: (1) FRAME FRAME, (7) BLACK TUBE BEAMS, (4) BLACK COVER BLACK COVER, (32) 1/2" PLATED SHAKEPROOF WASHER, (16) 1/2" x 1-1/2" H.H.S.S. BOLTS, (16) 1/2" UNISTRUT SPRING
3. 12" x 12" PIPE SLOT KNOCKOUT x 5 1/2" DEEP. LOCATE AS FOLLOWS: LOWER SECTION, (2) SHELL MTD.
4. 2 TON x 3 3/8" GALVANIZED RISS ANCHOR FOR HANDLING. LOCATE AS FOLLOWS: LOWER SECTION, (4) SHELL MTD.

THESE NOTES APPLY TO BOTH CWD-801-1 AND CWD-801-2.

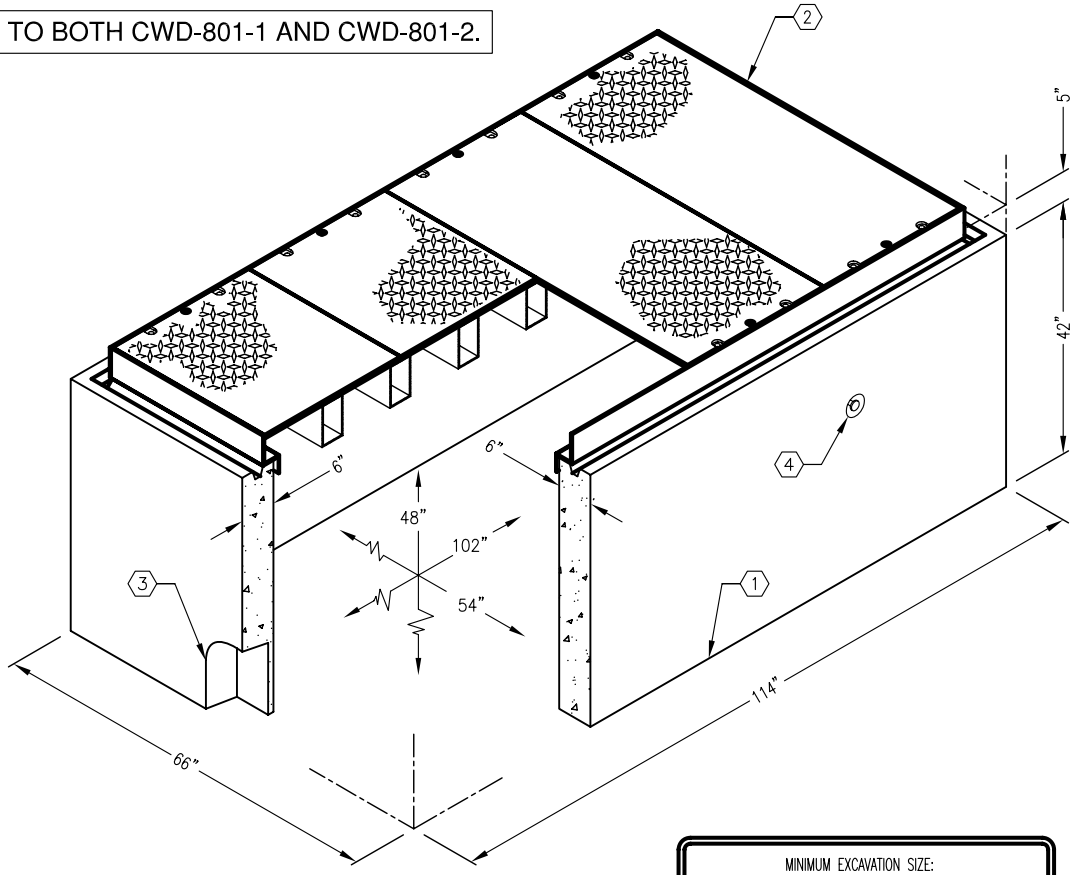

MINIMUM EXCAVATION SIZE:
6'-6" x 10'-6" x DEPTH REQ'D

0	DRAWN WEF	DATE 10-09	CHECK	APPROV.	1	DRAWN	DATE	CHECK	APPROV.	2	DRAWN	DATE	CHECK	APPROV.	3	DRAWN	DATE	CHECK	APPROV.

WATER
DISTRIBUTION & TRANSMISSION
CONSTRUCTION METHODS

TRAFFIC RATED VAULT FOR
3" THRU 6" COMPOUND METERS

CITY OF RIVERSIDE PUBLIC UTILITIES STANDARD DRAWING | DATE: OCT 2009 | CWD-800-1

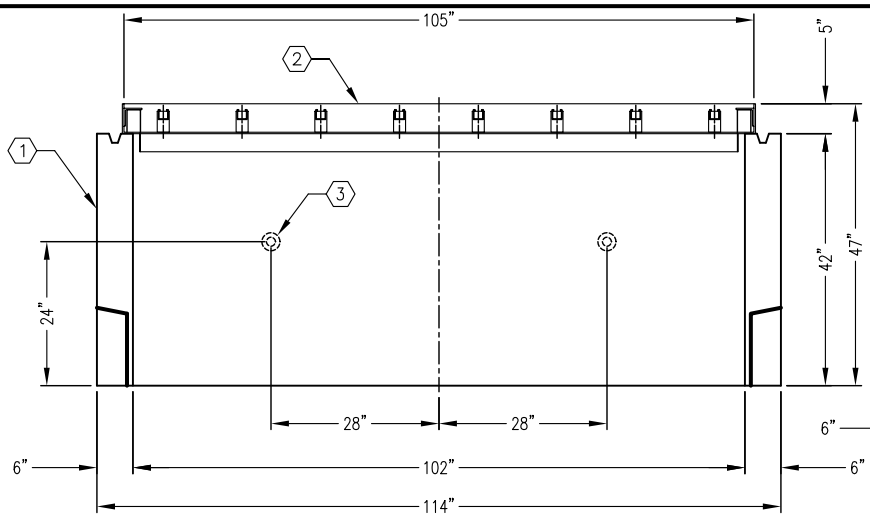

SECTION A–A

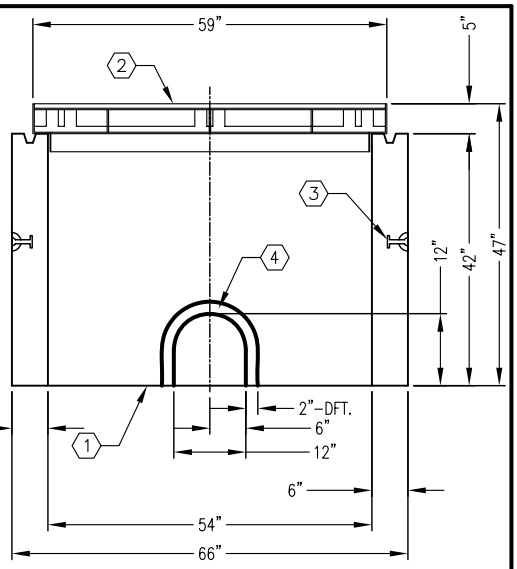

SECTION B–B

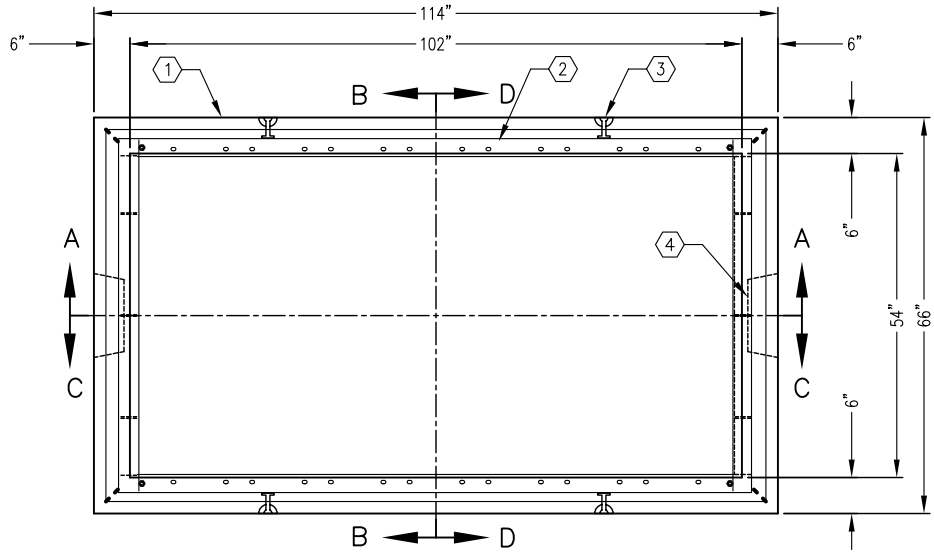

PLAN VIEW

SECTION D–D

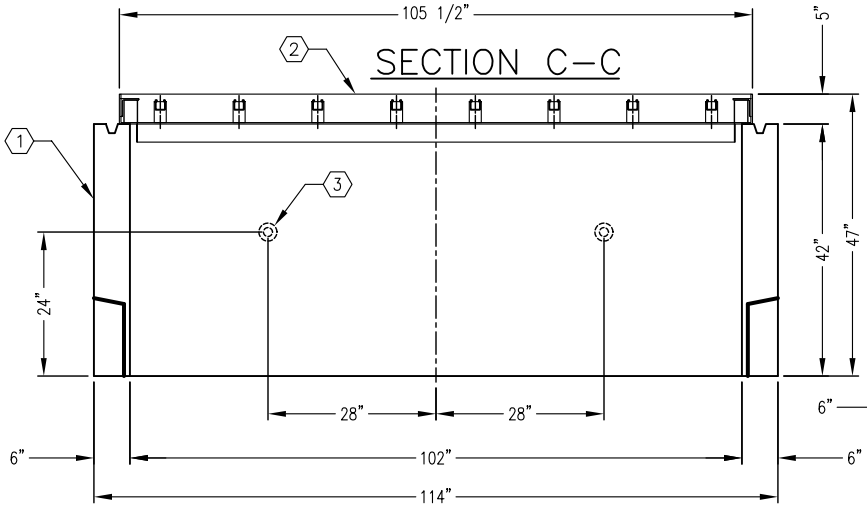

SECTION C–C

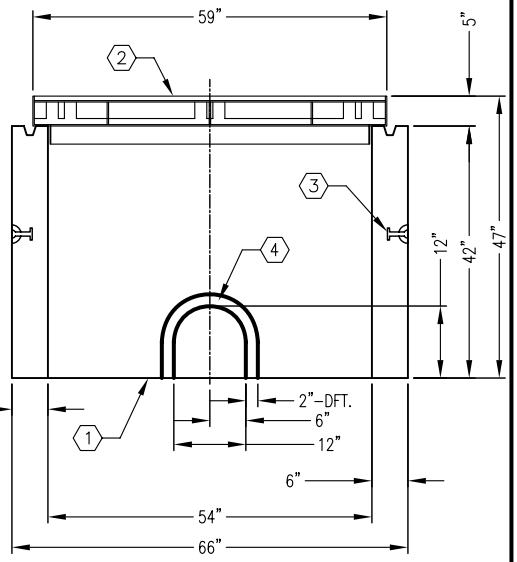

4' - 6" x 8' - 6" TRAFFIC VAULT X 47" DEEP

3	DRAWN	DATE	CHECK	APPROV.
2	DRAWN	DATE	CHECK	APPROV.
1	DRAWN	DATE	CHECK	APPROV.
0	DRAWN WEF	DATE 10–09		

WATER
DISTRIBUTION & TRANSMISSION
CONSTRUCTION METHODS

TRAFFIC RATED VAULT FOR 3" THRU 6" COMPOUND METERS

CITY OF RIVERSIDE PUBLIC UTILITIES STANDARD DRAWING | DATE: OCT 2009 | CWD-800-2

6'– 0"x 10'–0" TRAFFIC VAULT X 48 DEEP

GENERAL NOTES:

A . VAULT DESIGNED IN ACCORDANCE WITH AASHTO H–20–44 TRAFFIC BRIDGE LOADING USING 5,500 PSI [37.92MPa] COMPRESSIVE STRENGTH CONCRETE AND 60,000 PSI [413.2MPa] YIELD STRENGTH ASTM A–706 STEEL REINFORCEMENT PER CALC.

B . VAULT TO BE PLACED ON A MIN. 6" BASE OF CRUSHER RUN FOR EASE OF INSTALLATION AND EVEN LOAD DISTRIBUTION.

C . MIN. SOIL BEARING CAPACITY ASSUMED TO BE 2,000 PSF.

D . INSTALLATION OF VAULT WILL BE PER THE MANUFACTURER'S REQUIREMENTS AND PROCEDURES.

E . ALL TOLERANCES MUST MEET THE MANUFACTURER'S REQUIREMNTS.

1. 42" LOWER SECTION . WT. 8,950 Lbs.
2. 12"DIA x 18" H MOUSE HOLE . LOCATE AS FOLLOWS: LOWER SECTION, (2) CORE MTD.
3. (4) PIECE GALV. BOLT DOWN TRAFFIC COVER, AND FRAME W/ (11) REMOVABLE BEAM.
4. 4 TON x 4 3/4" GALVANIZED RISS FOR HANDLING. LOCATE AS FOLLOWS: LOWER SECTION (4) CORE & SHELL MTD.

THESE NOTES APPLY TO BOTH CWD–801–1 AND CWD–801–2

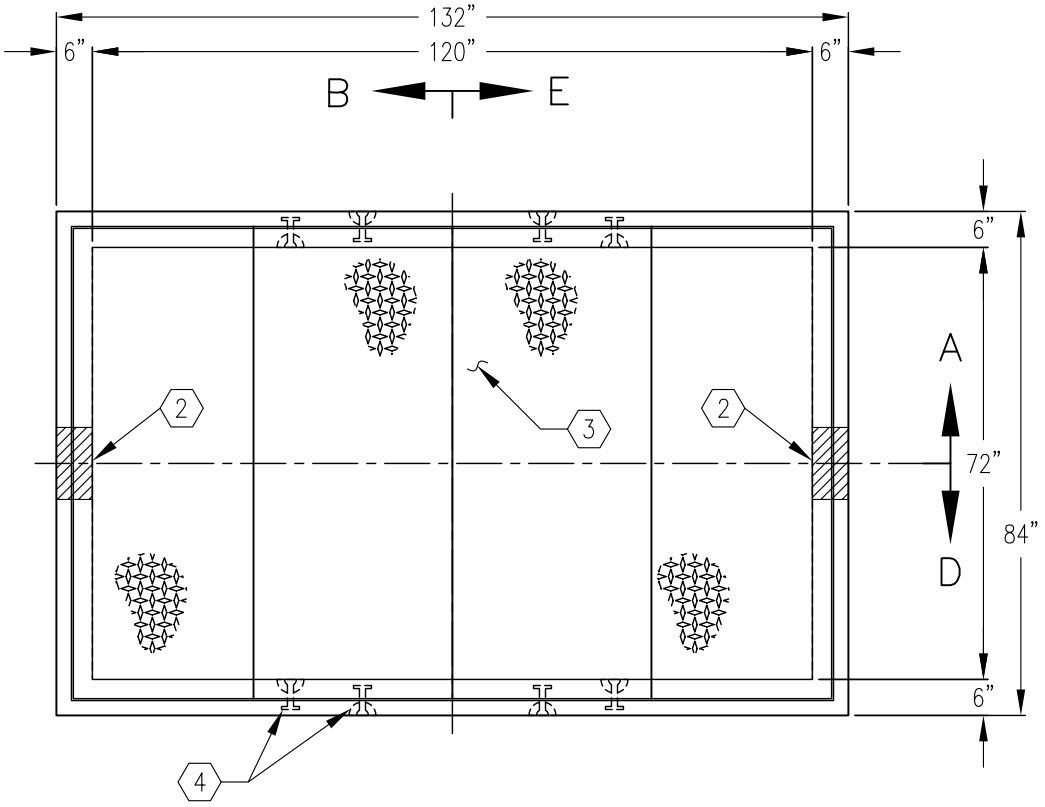

PLAN VIEW

WATER DISTRIBUTION & TRANSMISSION CONSTRUCTION METHODS	TRAFFIC RATED VAULT FOR 8", 10" & 12" COMPOUND METERS

CITY OF RIVERSIDE PUBLIC UTILITIES STANDARD DRAWING	DATE: OCT 2009	CWD-801-1

0	DRAWN WEF	DATE 10–09	CHECK	APPROV.	1	DRAWN	DATE	CHECK	APPROV.	2	DRAWN	DATE	CHECK	APPROV.	3	DRAWN	DATE	CHECK	APPROV.

6'– 0"x 10'–0" TRAFFIC VAULT X 48 DEEP

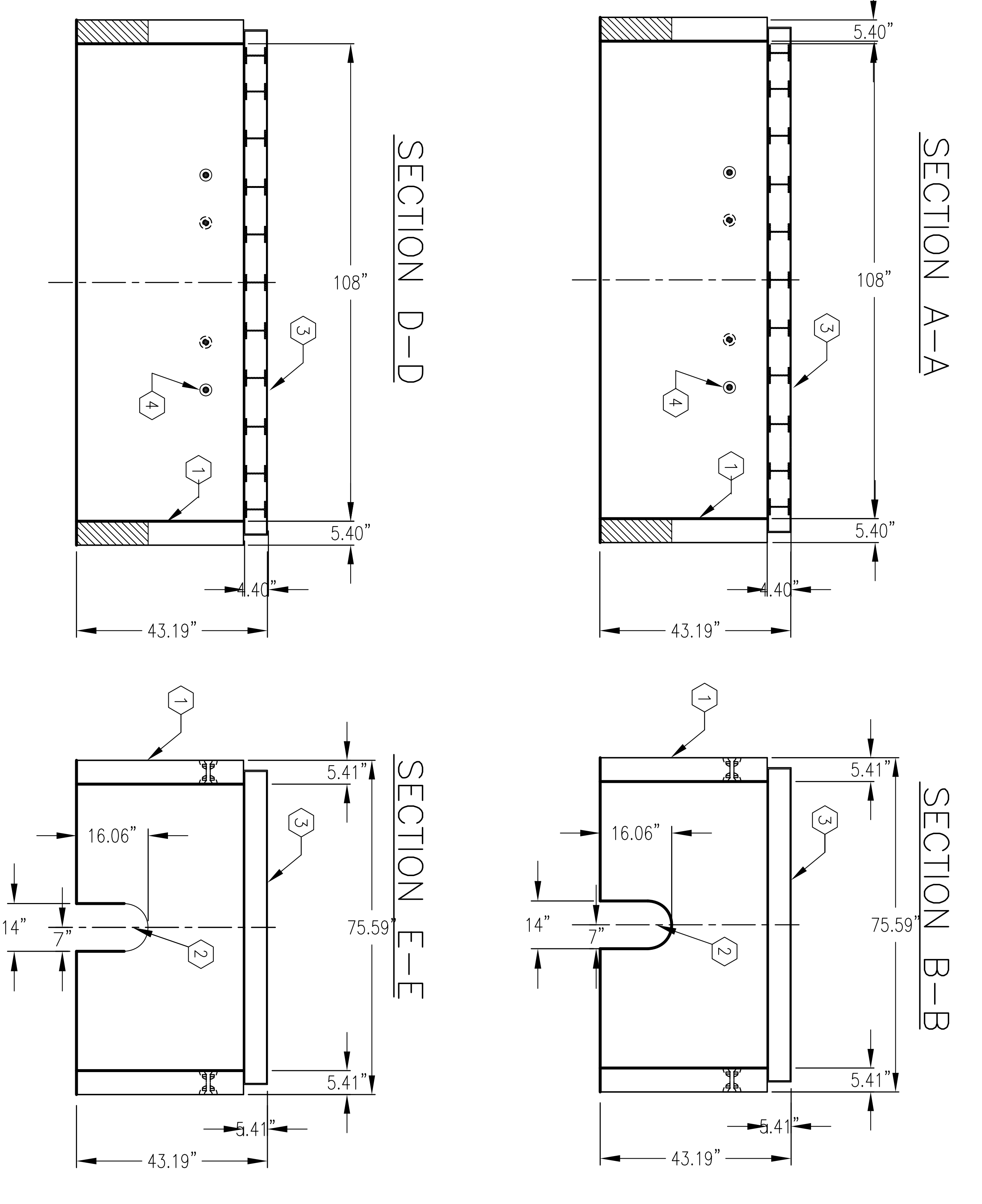

SECTION VIEW

0	DRAWN WEF	DATE 10–09	CHECK	APPROV.
1	DRAWN	DATE	CHECK	APPROV.
2	DRAWN	DATE	CHECK	APPROV.
3	DRAWN	DATE	CHECK	APPROV.

WATER
DISTRIBUTION & TRANSMISSION
CONSTRUCTION METHODS

TRAFFIC RATED VAULT FOR 8", 10" & 12" COMPOUND METERS

CITY OF RIVERSIDE PUBLIC UTILITIES STANDARD DRAWING | DATE: OCT 2009 | CWD-801-2

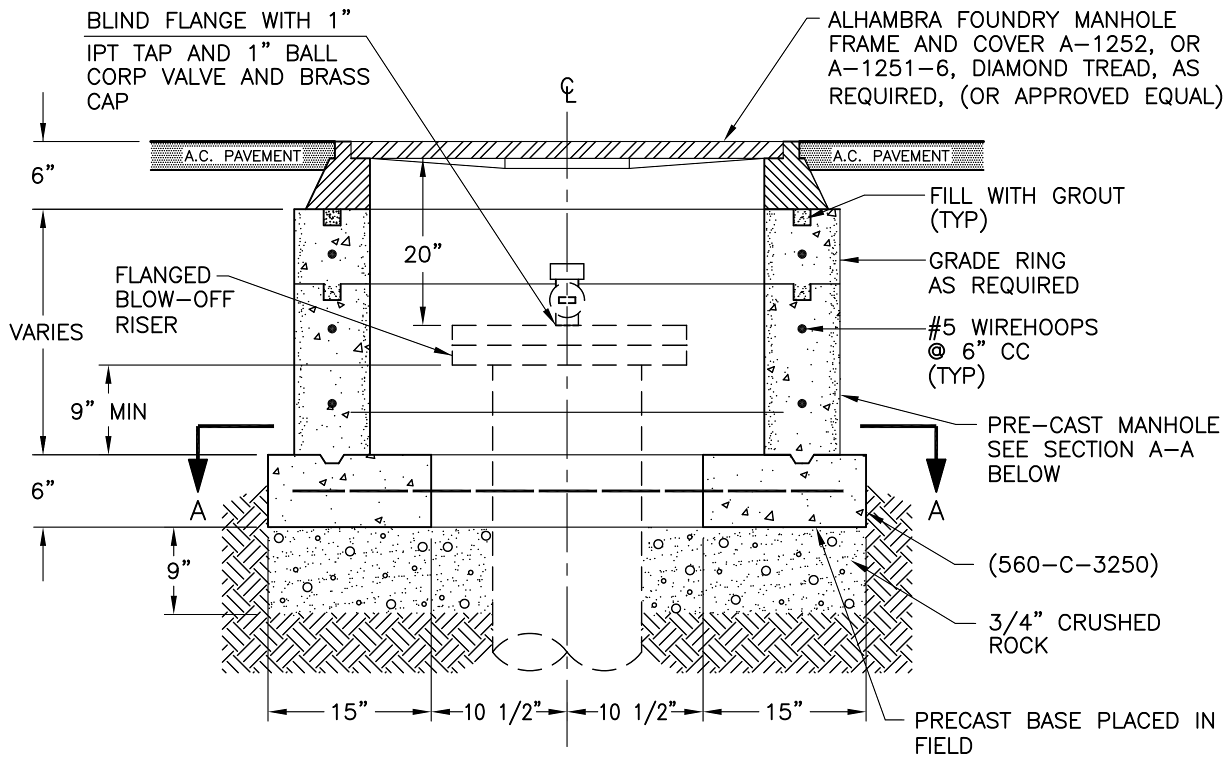

SECTIONAL PROFILE

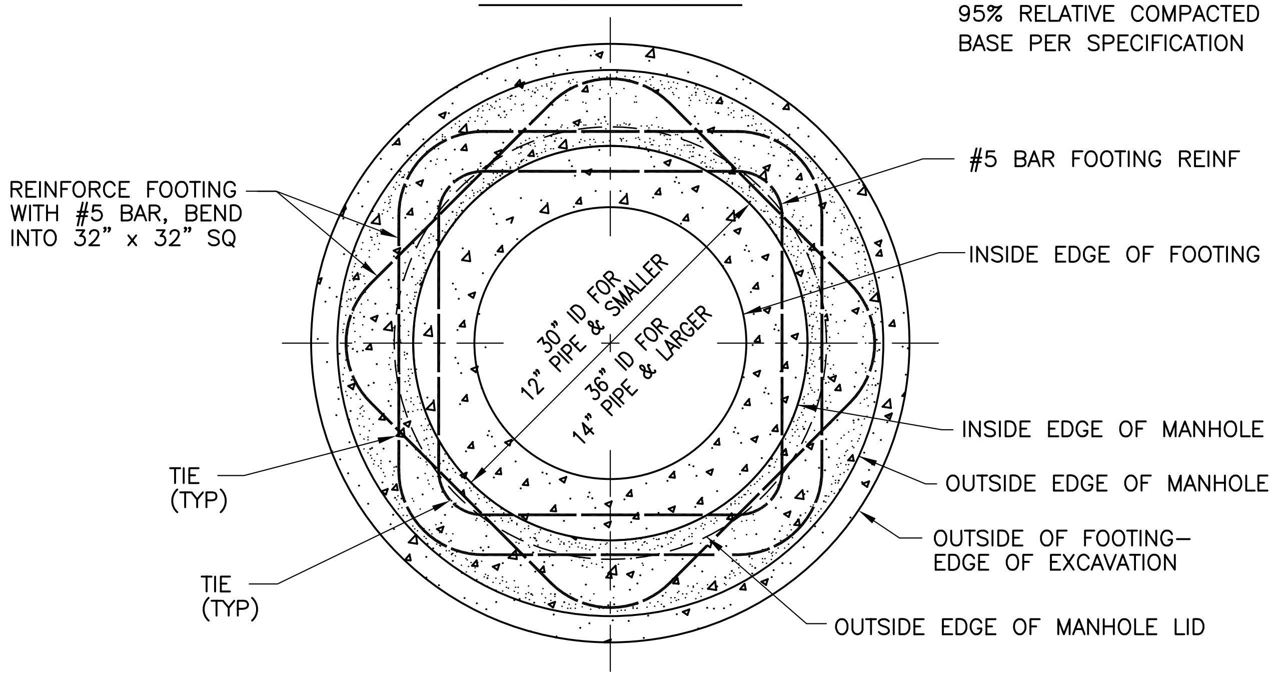

SECTION A-A

PRE-CAST MANHOLE SECTION SPECIFICATIONS:

1) DESIGN LOADING H = 20 - S 16
2) CEMENT: TYPE II, ASTM C150, 3250 PSI
3) REINFORCEMENT: GRADE 40 OR GRADE 60 ASTM A615
4) COVER TO BE DIAMOND-TREAD FINISH, LETTERED "CWD"

3	DRAWN	DATE	CHECK	APPROV.				
2	DRAWN	DATE	CHECK	APPROV.				
1	DRAWN	DATE	CHECK	APPROV.				
0	DRAWN WEF	DATE 10-09	CHECK	APPROV.				

WATER
DISTRIBUTION & TRANSMISSION
CONSTRUCTION METHODS

BLOW-OFF MANHOLE INSTALLATION

CITY OF RIVERSIDE PUBLIC UTILITIES STANDARD DRAWING | DATE: OCT 2009 | CWD-811

0	1	2	3
DRAWN WEF	DRAWN	DRAWN	DRAWN
DATE 10-09	DATE	DATE	DATE
CHECK	CHECK	CHECK	CHECK
APPROV.	APPROV.	APPROV.	APPROV.

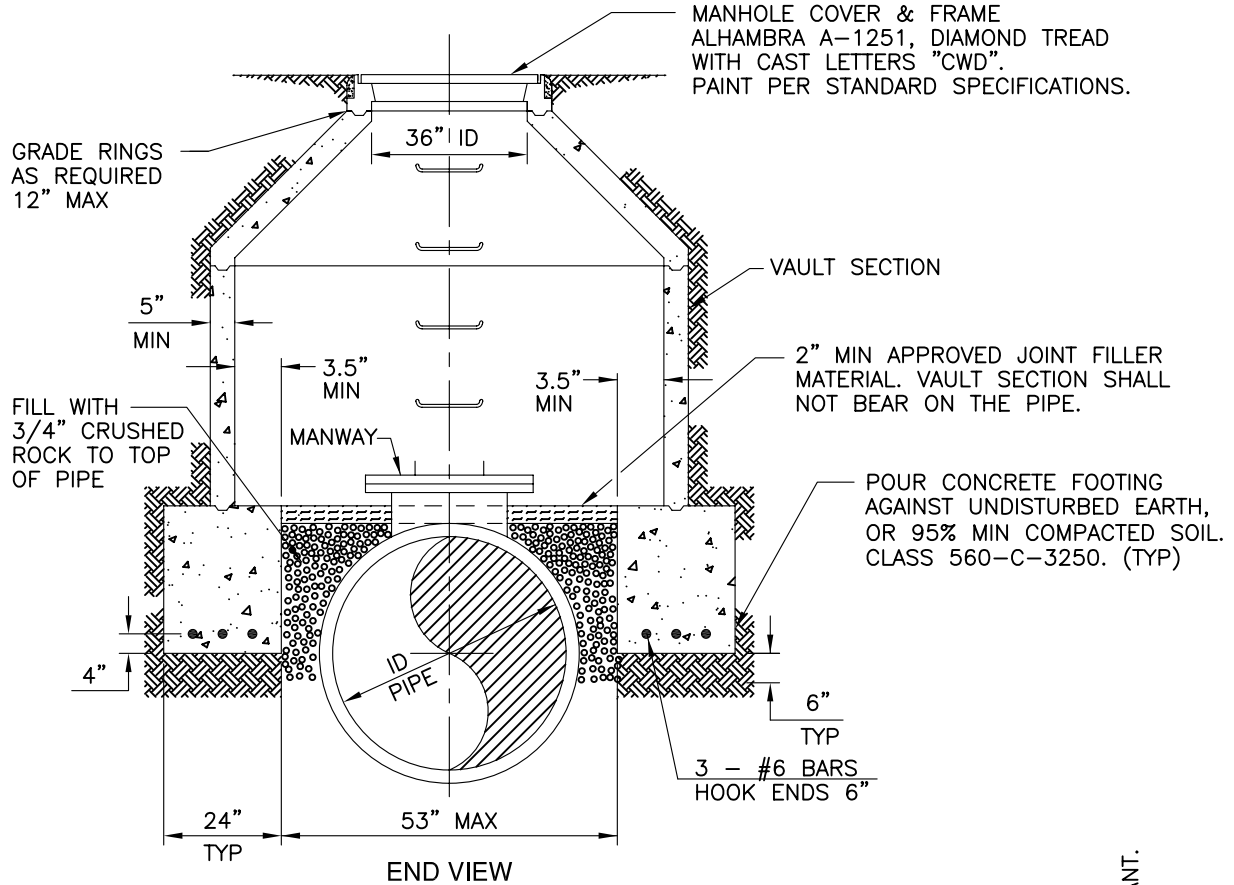

END VIEW
NTS

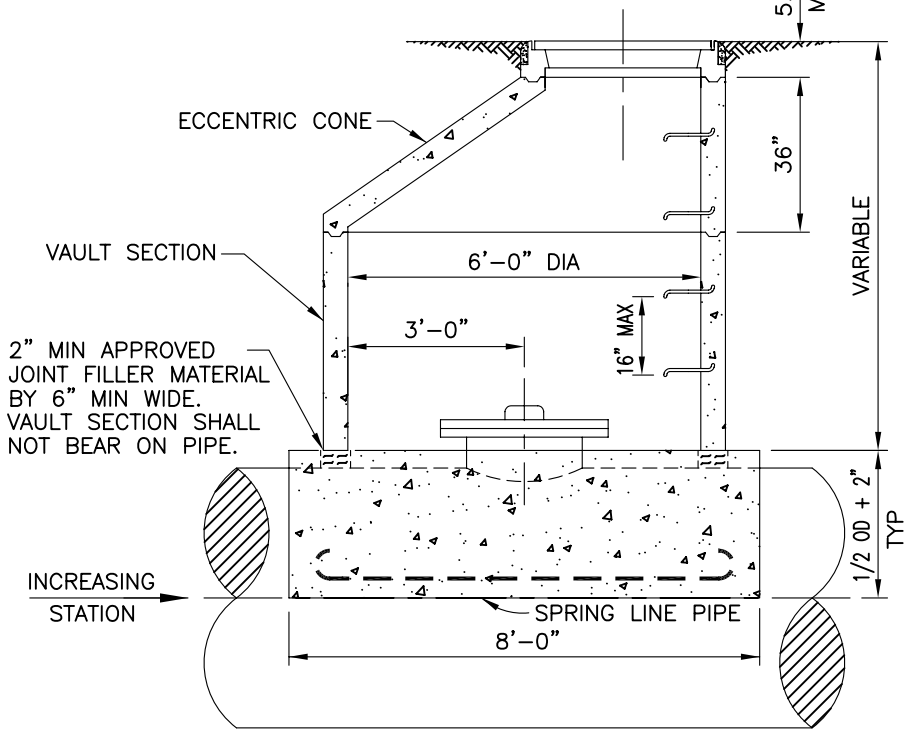

SIDE VIEW
NTS

NOTES:

1.) STEPS SHALL BE 16" WIDE STIRRUP TYPE SAFETY STEPS CAST IN-PLACE AT TIME OF MANUFACTURE. STEPS SHALL BE PLACED AT A MAX, OF 16" CENTER TO CENTER. MATERIAL FOR STEPS SHALL BE 3/4" GALV. STEEL, ASTM A-124.
2.) WHEN MANHOLE IS IN PAVED AREA, MANHOLE FRAME SHALL BE SET AFTER ADJACENT PAVEMENT HAS BEEN PLACED. TOP SHALL BE FLUSH WITH PAVEMENT.
3.) ALL JOINTS SHALL BE SEALED WITH AN APPROVED JOINT SEALANT.
4.) VAULT SHALL BE DESIGNED FOR H-20, S-16 LOADING.
5.) LOCATION FOR MANHOLES OVER MANWAYS AS SHOWN ON THE PLAN AND PROFILE SHEETS.

WATER
DISTRIBUTION & TRANSMISSION
CONSTRUCTION METHODS

MANHOLE DETAIL
48" MAX ID PIPE

CITY OF RIVERSIDE PUBLIC UTILITIES STANDARD DRAWING | DATE: OCT 2009 | CWD-816

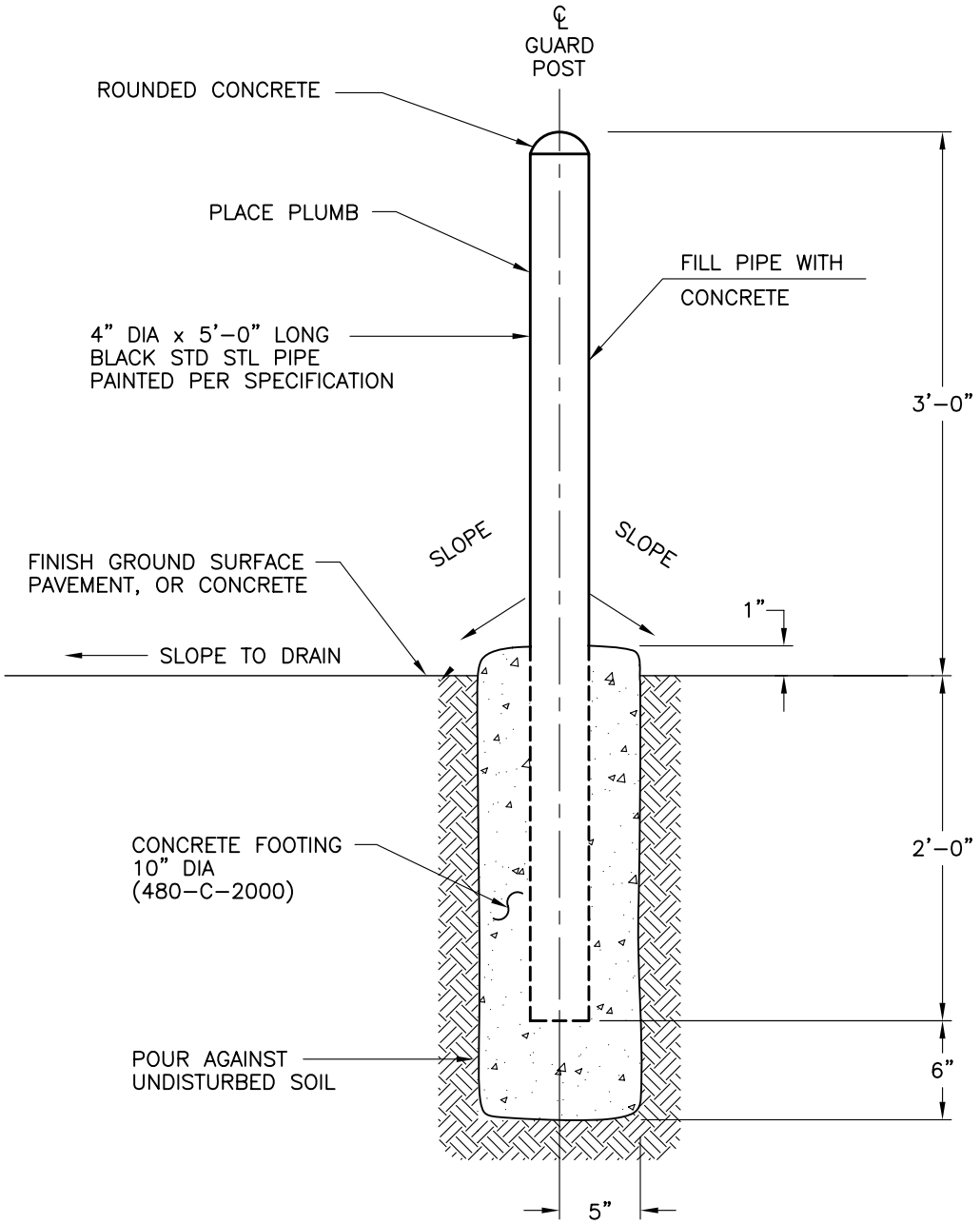

SECTIONAL VIEW

NOTES:

1.) NUMBER AND POSITION OF GUARD POSTS AS SPECIFIED ON PLANS.

2.) REFER TO "STANDARD SPECIFICATIONS FOR PUBLIC WORKS CONSTRUCTION", SEC. 210 AND SEC. 310.

3	DRAWN	DATE	CHECK	APPROV.
2	DRAWN	DATE	CHECK	APPROV.
1	DRAWN	DATE	CHECK	APPROV.
0	DRAWN WEF	DATE 10-09	CHECK	APPROV.

WATER
DISTRIBUTION & TRANSMISSION
CONSTRUCTION METHODS

4" DIA. GUARD POST INSTALLATION

CITY OF RIVERSIDE PUBLIC UTILITIES STANDARD DRAWING | DATE: OCT 2009 | CWD-900-A

3	DRAWN	DATE	CHECK	APPROV.	
2	DRAWN	DATE	CHECK	APPROV.	
1	DRAWN	DATE	CHECK	APPROV.	
0	DRAWN WEF	DATE 10-09	CHECK	APPROV.	

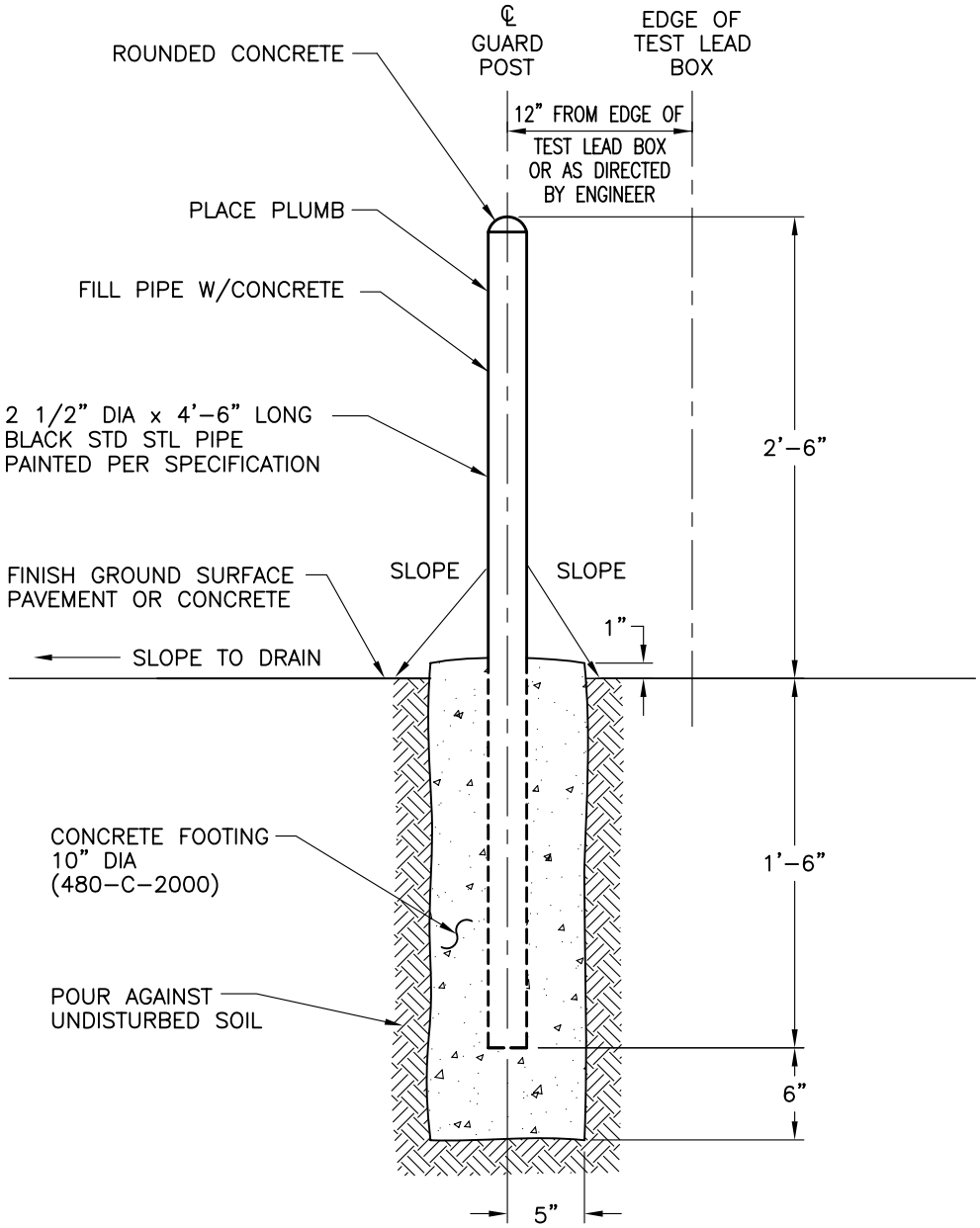

SECTIONAL VIEW

NOTES:

1.) NUMBER AND POSITION OF GUARD POSTS AS SPECIFIED ON PLANS.

2.) REFER TO "STANDARD SPECIFICATIONS PUBLIC WORKS CONSTRUCTION", SEC 210 AND 310.

WATER DISTRIBUTION & TRANSMISSION CONSTRUCTION METHODS	2.5" DIA. GUARD POST INSTALLATION

CITY OF RIVERSIDE PUBLIC UTILITIES STANDARD DRAWING	DATE: OCT-2009	CWD-900-B

3	DRAWN	DATE	CHECK	APPROV.	
2	DRAWN	DATE	CHECK	APPROV.	
1	DRAWN	DATE	CHECK	APPROV.	
0	DRAWN WEF	DATE 10-09	CHECK	APPROV.	

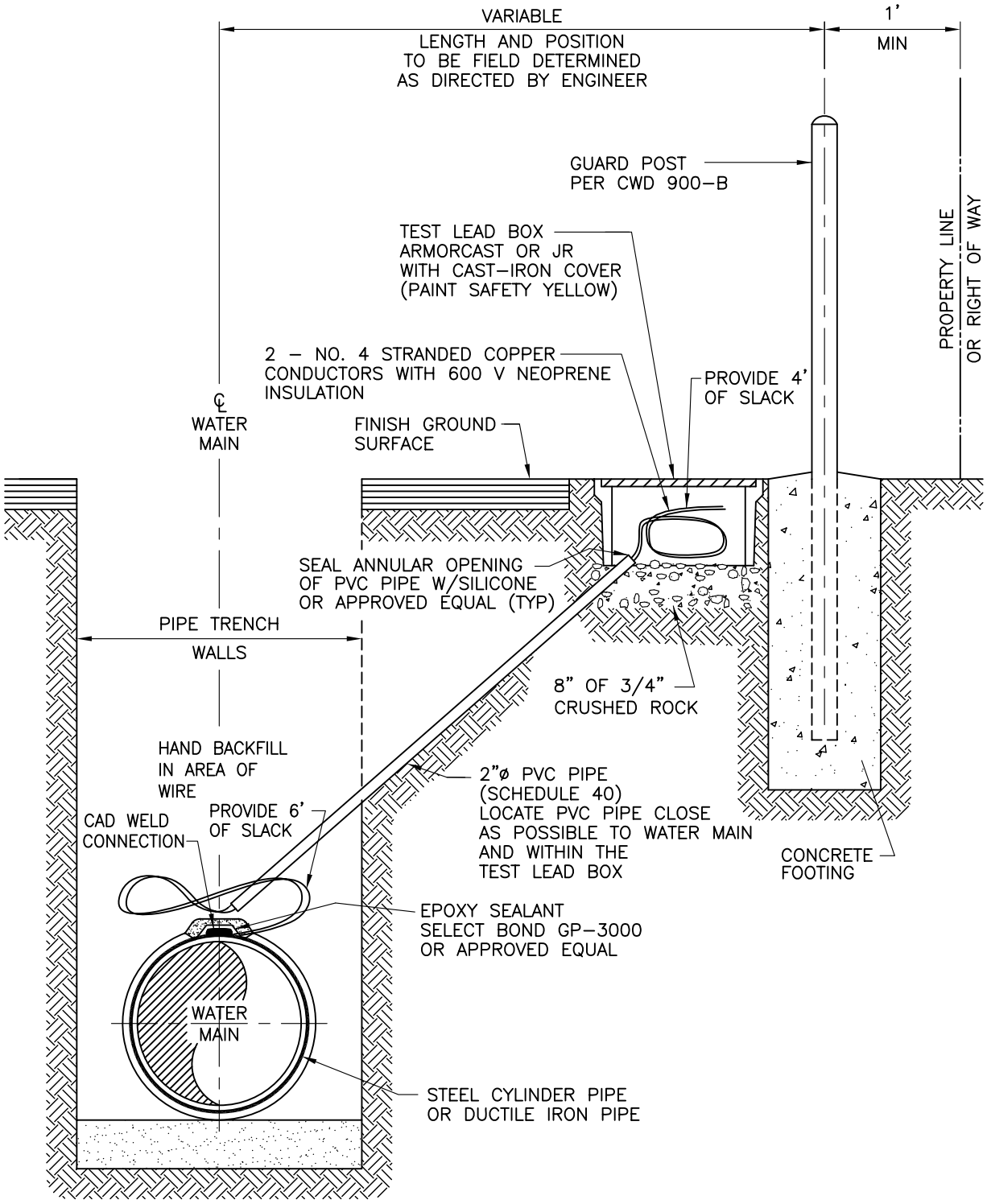

PROFILE VIEW

NOTES

1.) "CADWELD" TYPE HA-3 CONNECTION, CAH AA-IL, WITH F33 STANDARD CHARGE (STEEL PIPE); TYPE HB CONNECTION, CA HBA-16, XF-19 CHARGE (DUCTILE IRON PIPE); OR CITY APPROVED EQUAL.

2.) PREPARATION OF CONDUCTOR AND PIPE SURFACES SHALL BE MADE PER THE PUBLISHED INSTRUCTIONS OF THE CONNECTOR MANUFACTURER.

3.) SEE DRAWINGS FOR STATION AND LOCATION OF TEST LEAD CONNECTIONS.

4.) EPOXY SEALANT: MIX AND FIRMLY APPLY EPOXY PUTTY TO PROVIDE A WATER-TIGHT SEAL AT LEAST 1/4 INCH THICK OVER WELD AND BARE WIRE. OVERLAY WIRE INSULATION BY 1/2 INCH.

WATER DISTRIBUTION & TRANSMISSION CONSTRUCTION METHODS	TEST LEAD INSTALLATION

CITY OF RIVERSIDE PUBLIC UTILITIES STANDARD DRAWING	DATE: OCT-2009	CWD-922

0	1	2	3
DRAWN WEF	DRAWN	DRAWN	DRAWN
DATE 10-09	DATE	DATE	DATE
CHECK	CHECK	CHECK	CHECK
APPROV.	APPROV.	APPROV.	APPROV.

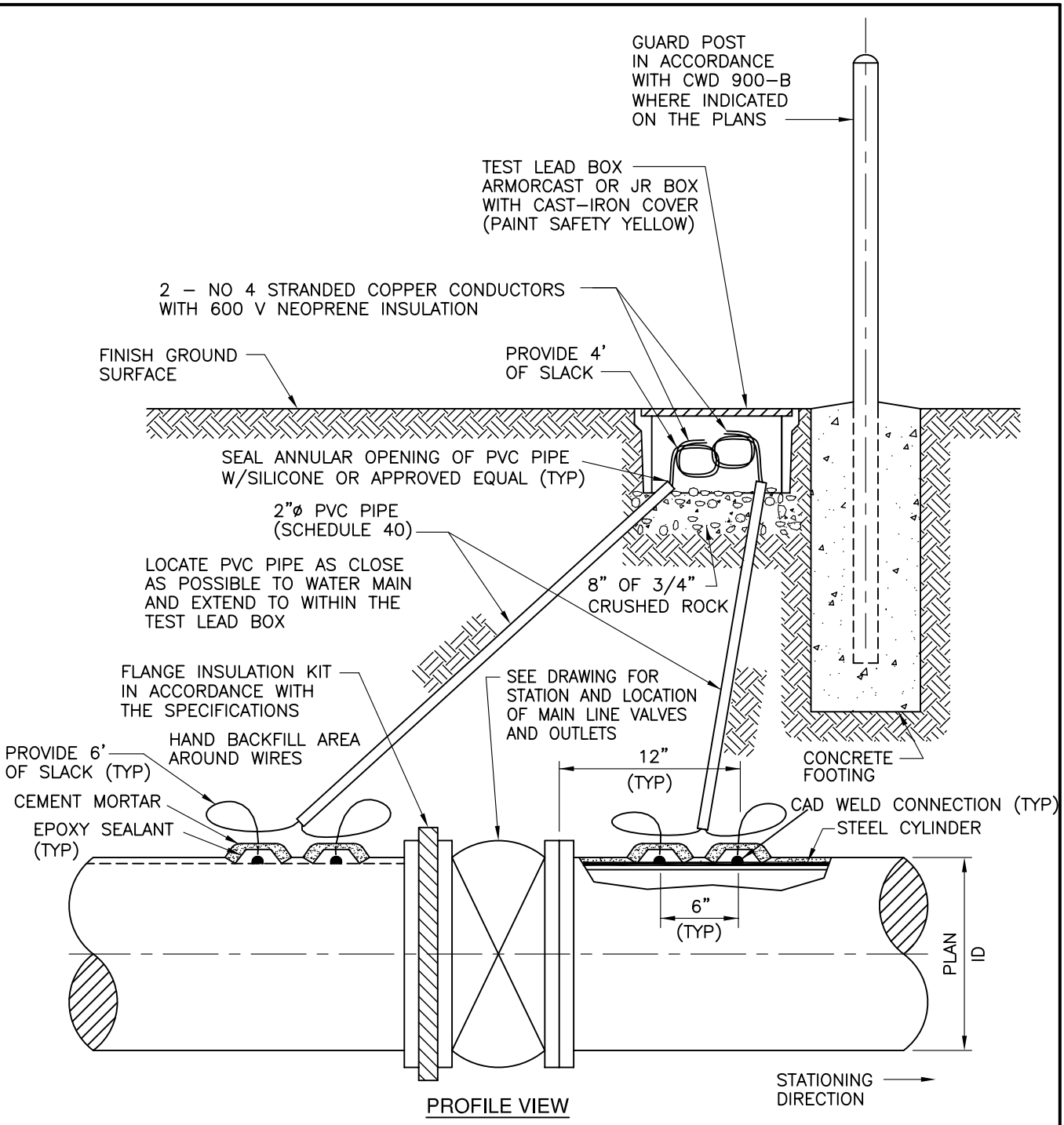

NOTES

1.) FLANGE INSULATION GASKETS SHALL BE FULL-FACED, NEOPRENE-COATED FABRIC-REINFORCED PHENOLIC, 1/8 INCH THICK. A ONE-PIECE SLEEVE AND WASHER, SEPARATE PHENOLIC WASHER, AND TWO CADMIUM-PLATED STEEL WASHERS SHALL BE USED FOR EACH BOLT OR CAP SCREW.

2.) FLANGE KITS SHALL BE FURNISHED IN ACCORDANCE WITH THE SPECIFICATIONS.

3.) TEST LEAD CONNECTIONS AND LOCATIONS IN ACCORDANCE WITH CWD-922.

4.) TEST LEADS SHALL BE TAGGED AND/OR COLOR-CODED EAST/WEST OR NORTH/SOUTH OF VALVE.

5.) TEST LEAD INSULATION KIT SHALL BE STRIPPED BACK ONE INCH FROM ENDS.

6.) WHEN FLANGE KITS ARE SPECIFIED: SIZE_____ - 150# - TYPE EN-DW.

WATER DISTRIBUTION & TRANSMISSION CONSTRUCTION METHODS	FLANGE INSULATION AND TEST LEAD INSTALLATION	
CITY OF RIVERSIDE PUBLIC UTILITIES STANDARD DRAWING	DATE: OCT-2009	CWD-923

3	DRAWN	DATE	CHECK	APPROV.	
2	DRAWN	DATE	CHECK	APPROV.	
1	DRAWN	DATE	CHECK	APPROV.	
0	DRAWN VSV	DATE 10-09	CHECK	APPROV.	

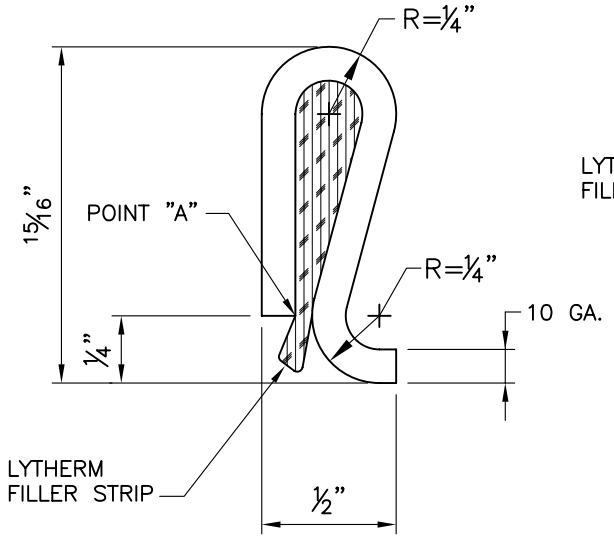

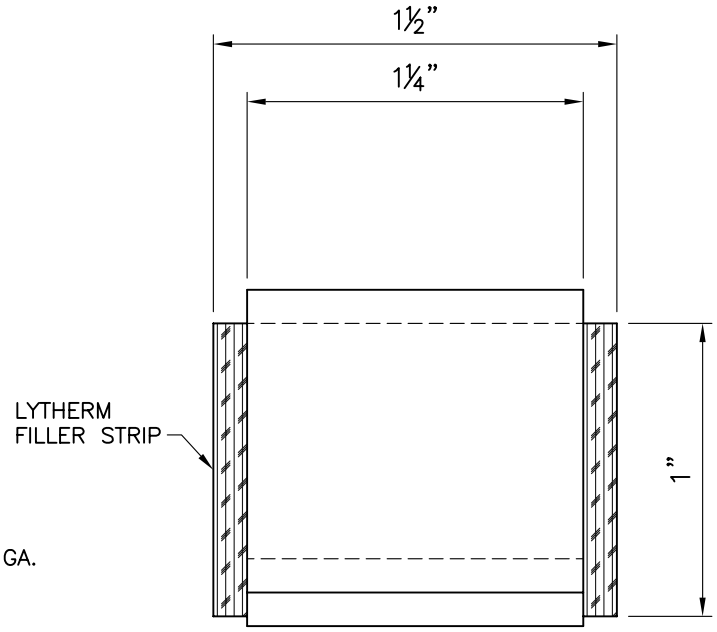

NOTES:

1. STEEL BONDING CLIP SPECIFICATIONS:
   MATERIAL SPECIFICATION ASTM A356 COMMERCIAL QUALITY
   CUT LENGTH = 2½" + 1/16", WIDTH = 1¼" + 1/16".
2. LYTHERM FILLER STRIP DIMENSIONS TO BE 1"x1½"
   IN ORDER TO OVERLAP SIDES OF CLIP.
3. CRIMP BONDING CLIP OVER FILLER AT POINT "A" TO
   COMPRESS FILLER.

PERFORMANCE NOTE:

THE ADDED FLEXIBILITY OF THE BONDING CLIP (¾" + MOVEMENT TOLERANCE) SIGNIFICANTLY REDUCES THE CHANCES OF WELDS BREAKING, AS OPPOSED TO THE RIGID "S"–BAR.

PIPE SIZE	JUMPERS/JOINT
16" THRU 24"	2
30" THRU 42"	3
46" THRU 54"	4

MILD STEEL JOINT BOND

WATER
DISTRIBUTION & TRANSMISSION
CONSTRUCTION METHODS

JOINT BOND DETAILS

RIVERSIDE PUBLIC UTILITIES DEPT. STANDARD | DATE: OCT-2009 | CWD-924

0	DRAWN	DATE	CHECK	APPROV.	1	DRAWN	DATE	CHECK	APPROV.	2	DRAWN	DATE	CHECK	APPROV.	3	DRAWN	DATE	CHECK	APPROV.
	RGM	10-09																	

RIVERSIDE PUBLIC UTILITIES STANDARD DRAWING

WATER
DISTRIBUTION & TRANSMISSION
CONSTRUCTION METHODS

NOTIFICATION SIGN

DATE: OCT 2009

CWD-960-1

RIVERSIDE RENAISSANCE

WATER · ENERGY · LIFE
CITY OF RIVERSIDE
PUBLIC UTILITIES

- Project Name:

PROJECT NAME / WATER MAIN

- Streets Impacted:
- Project Duration:
- Contractor:
- Phone No.:

RIVERSIDE PUBLIC UTILITIES: (951) 826-5311

WARD PROJECT

COUNCIL MEMBER

MAYOR

CITY COUNCIL MEMBERS

CITY MANAGER

www.RiversideCa.gov

www.riversidepublicutilities.com

NOTIFICATION SIGN NOTES:

1). SIGN DIMENSIONS ARE TO BE 48"X60" WIDE.

2). SIGN SHALL BE BLUE LETTERS ON WHITE BACKGROUND WITH RPU LOGO CAN BE DOWNLOADED AT WWW.RIVERSIDEPUBLICUTILITIES.COM.

3). CITY SIGN TEMPLATE CAN BE DOWNLOADED AT WWW.RIVERSIDECA.GOV

4). SIGNS SHALL BE POSTED A MINIMUM OF ONE WEEK PRIOR TO CONSTRUCTION.

5). SIGN SHALL BE POSTED AT EACH END OF THE PROJECT AND LOCATIONS TO BE APPROVED BY THE ENGINEER PRIOR TO ERECTING THE SIGNS.

6). SEE CWD-960-6 FOR CONSTRUCTION OF SIGN.

0	1	2	3
DRAWN WEF	DRAWN	DRAWN	DRAWN
DATE 10-09	DATE	DATE	DATE
CHECK	CHECK	CHECK	CHECK
APPROV.	APPROV.	APPROV.	APPROV.

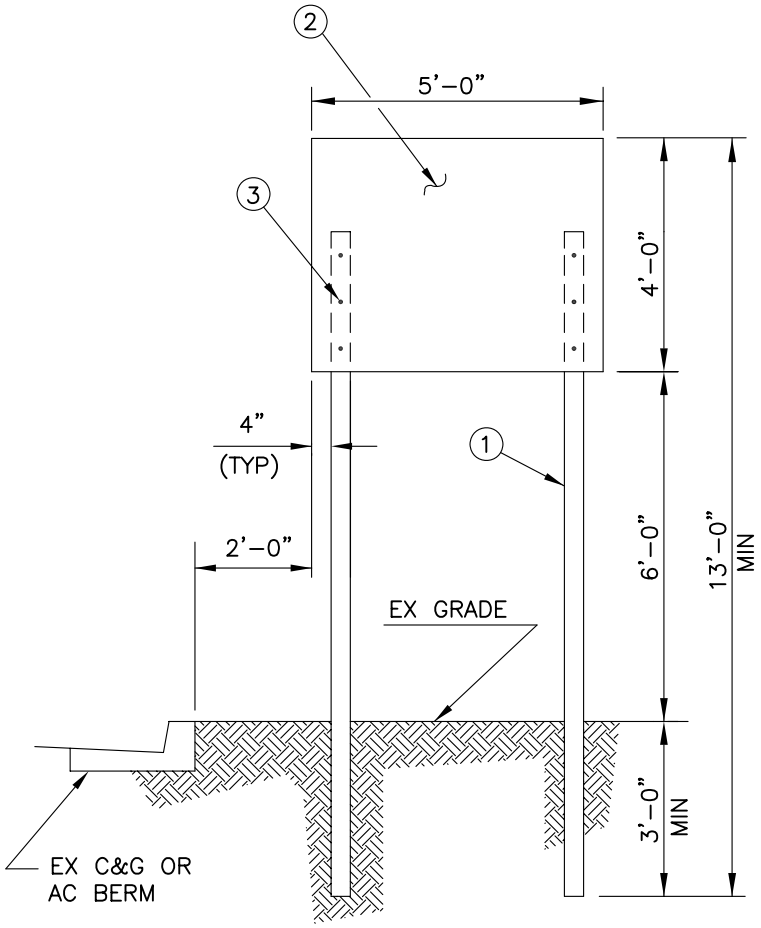

CONSTRUCTION NOTES:

1. 2 – DOUGLAS FIR CONSTRUCTION GRADE 4" X 4" POST.
2. 3/4" THICK PLYWOOD.
3. FASTEN PLYWOOD SIGN TO POST W/6 – 5"± CARRIAGE BOLTS W/NUTS, FLAT WASHERS, AND JAM NUTS.

NOTES:

1) EXACT LOCATION OF SIGN TO BE DETERMINED BY ENGINEER WITH APPROVAL BY CITY PUBLIC UTILITIES DEPARTMENT.

WATER DISTRIBUTION & TRANSMISSION CONSTRUCTION METHODS	NOTIFICATION SIGN	
CITY OF RIVERSIDE PUBLIC UTILITIES STANDARD DRAWING	DATE: OCT-2009	CWD-960-2