Revision

DATE: 8/24/04

REVISION: New Format, Added note 3

DATE: 8/24/04

APPROVAL: Dave Redding

CITY OF RIVERSIDE PUBLIC UTILITIES

METAL STREET LIGHT STANDARD DETAILS

UGS

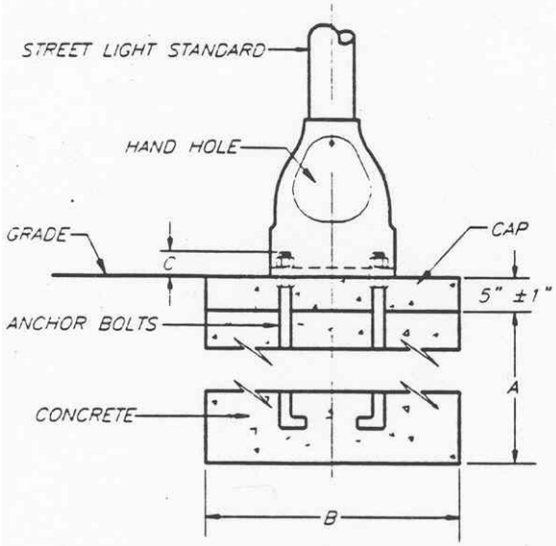

TYPICAL BOLT CIRCLE
S6

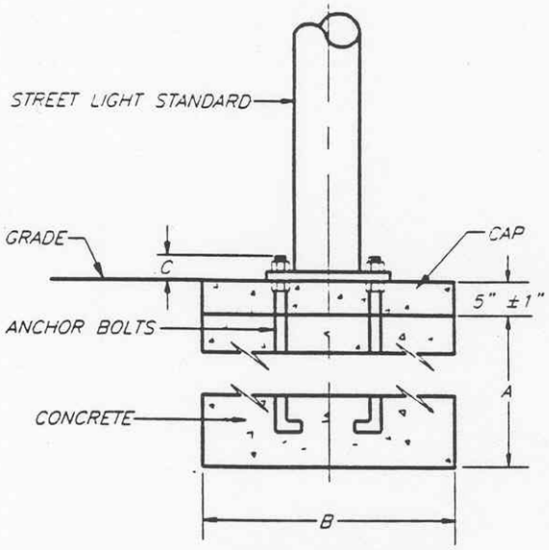

TYPICAL BOLT CIRCLE
S10

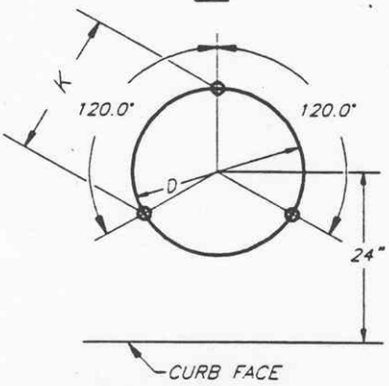

TYPICAL 3 BOLT CIRCLE
S6

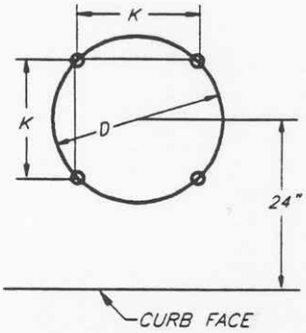

TYPICAL 4 BOLT CIRCLE
S10

ITEM SCHEDULE

Item No.	Manufacturer	Cat No.	Dimension						
			A	B	C	Anchor Bolt	K	D	Luminaire Mounting Height
S6	HAPCO	73-005	36”	18”	1 ¾”	1” x 36” x 4”	7 13/16””	9”	14’
	P.S.P.C	TS14BPR	36”	18”		1” x 36” x 4”	8 11/16”	10”	14’
	Ameron	SPL-140-RIV	36”	18”			8 11/16”	10”	14’
	Pumco	LE-10076	36”	18”			8 11/16”	10”	14’
S10	Pumco	203-11-090-370-1-8G	60”	30”			9 3/16”	13”	40’

Notes :

1. See specifications for conduit entrances, bonding and foundation requirements.
2. Confirm bolt circle dimensions with manufacturer.
3. Streetlight door opening to face sidewalk.