RAINCROSS CONCRETE STREET LIGHT STANDARDS

(1) Materials installed by the contractor but provided by the City of Riverside, available for pick-up at City of Riverside Corporation Yard 8095 Lincoln Ave. Phone : 351-6115

(2) Materials installed by the contractor but provided by the Developer. (When the City of Riverside is the developer the materials will be provided at the above address.)

(3) Materials provided and installed by the contractor

RIVERSIDE PUBLIC UTILITIES DEPT. - UNDERGROUND STRUCTURES

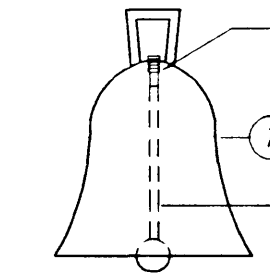

ALUMINUM BELL & CLAPPER

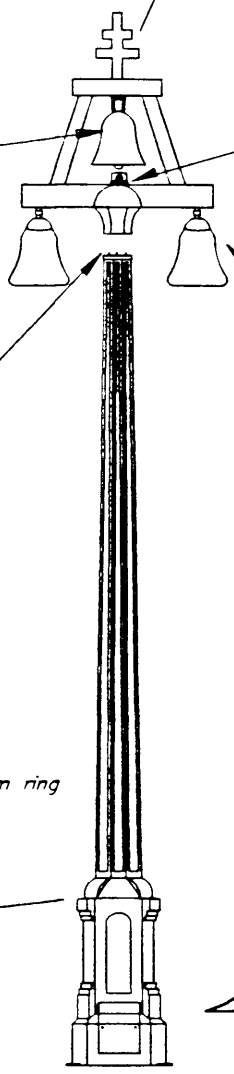

(2) Aluminum Raincross Luminaire Assembly including mounting ring and nuts to connect the raincross top to the concrete standard (approx. height 4'8")

Photo Cell (3)

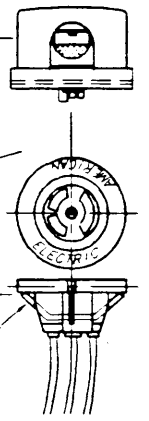

Photo Cell Receptacal (3)

Clip

TOP DETAIL

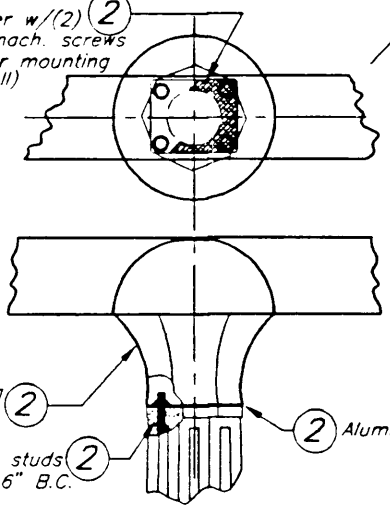

Access cover w/(2) (2) flat head S.S. mach. screws (hole in cover for mounting photo cell)

Aluminum casting ASTM 319 (2)

(4) 1/2"-13NC studs galv. on 3 11/16" B.C. (2)

(2) Aluminum ring

(2) Concrete Standard
(approx. weight 2400 lbs.)
(approx. height 17'6")

Wiring the light standard shall include pulling all wiring up the pole and making the connections to the photo controls and post top ballasts.

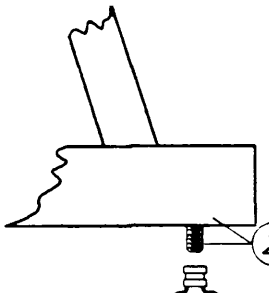

(2) Raincross Luminaire Assembly with 3/4" threaded pvc pipe 2" long

(1) Globe Fixture

(3) Brass screws 4-1/4"x1" approximate size

1 1/4" rubber seal w/ (3) respective nut & washer
(rubber washer to be placed between the globe fixture and the raincross top to prevent water from entering the globe)

(2) Post top bracket

Lamp (3)

(1) Globe

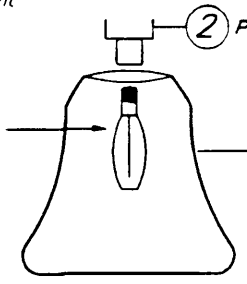

BELL SHAPED GLOBE & LIGHT FIXTURE

8/10/95
REVISION APPROVED

8/15/95
ELECTRICAL ENGINEERING MANAGER

UGS-800RC

DATE: 8-9-95	PAGE 1 OF 3

ITEM SCHEDULE FOR RAINCROSS STREET LIGHT

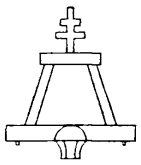

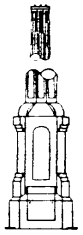

RAINCROSS LUMINAIRE ASSEMBLY & CONCRETE STANDARD

MANUFACTURER	QTY	HT	DESCRIPTION	MANUFACTURER'S CATALOG NUMBER
Ameron Inc. Pole Products Division. DISTRIBUTED THRU: Pacific Lighting Sales Inc. (714)752-3085	1	4'8"	Aluminum structured tubing	9CT17-Raincrosss Complete with Raincross Top & Anchor bolts
		HT.	DESCRIPTION	
		17'6"	Concrete Aggregate	

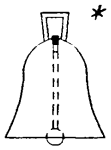

ALUMINUM BELL AND CLAPPER *

MANUFACTURER	QTY	DESCRIPTION	MANUFACTURER'S CATALOG NUMBER
Johnson Aluminum Foundry Cerritos, Ca. (213)926-1326	1 ea.	Aluminum Bell and Clapper	Supplied by City of Riverside

GLOBE FIXTURE *

MANUFACTURER	QTY	DESCRIPTION	MANUFACTURER'S CATALOG NUMBER
Johnson Aluminum Foundry	2 ea.	Aluminum Globe Fixture	Supplied by City of Riverside

POST TOP BALLAST ASSEMBLY

MANUFACTURER	QTY	DESCRIPTION	SIZE	MANUFACTURER'S CATALOG NUMBER
Inland Lighting Sup. 3393 Durahart Riverside, CA. (909) 784-3455 (Ask for ROD)	2 ea.	Post Top Bracket	100w-240v	Custom fabrication of bracket, medium size socket, 240v, for Incandescent light.

HIGH PRESSURE SODIUM LAMP

MANUFACTURERS	QTY	DESCRIPTION	SIZE	MANUFACTURER'S CATALOG NUMBER
G.E. Sylvania	2 ea.	240v Incandescent	200w	G.E. Sylvania 189PS25/64

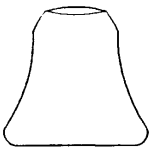

POLY CARBONATE GLOBE

MANUFACTURER	QTY	DESCRIPTION	MANUFACTURER'S CATALOG NUMBER
Rotational Molding Inc. Gardena, Ca (213)327-5401	2 ea.	City of Riverside to provide the mold. Approx. 51 globes made per drum. Orders to be placed in units of drums.	Supplied by City of Riverside

PHOTO CELL AND RECEPTACLE

MANUFACTURERS	QTY	DESCRIPTION	SIZE	MANUFACTURER'S CATALOG NUMBER		
				LAMPAS	FISHER PIERCE	DTL
See catalog #	1 ea.	240v P.C.	1000w	6240	6672	D240
American Electric Corp.	1 ea.	Twist lock P.C. Receptacle		PECR-247-KIT		

* THESE ITEMS SHALL BE SEALED AND "HARD GREEN" ANODIZED.

RIVERSIDE PUBLIC UTILITIES DEPT. – UNDERGROUND STRUCTURES

UGS-800RC

DATE: 8-9-95

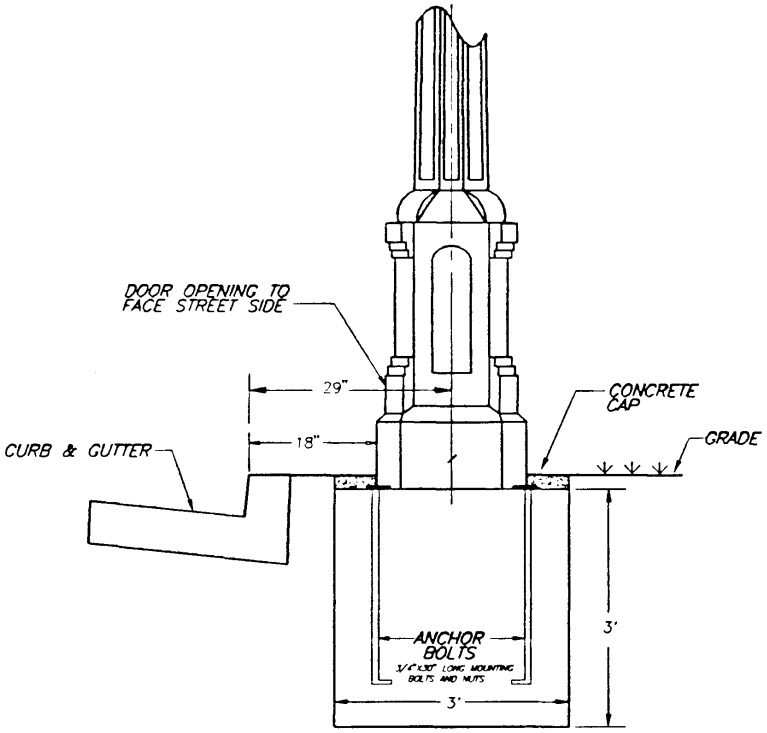

TYPICAL RAINCROSS LIGHT STANDARD CROSS SECTION

NO SCALE

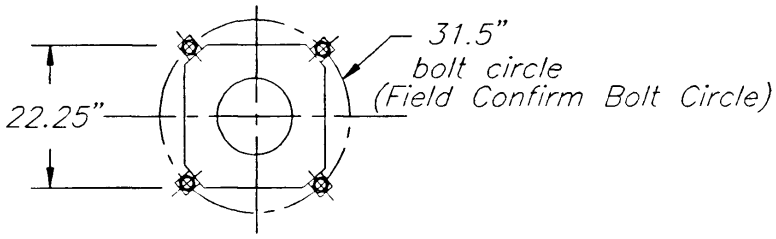

UGS–800RC

DATE: 8–9–95	PAGE 3 OF 3