Revision

DATE: 12/28/05

REVISION: NOTE CORRECTIONS

DATE: 1/6/06

APPROVALS: Dave Redding

RIVERSIDE PUBLIC UTILITIES

BURIED TRANSFORMER ENCLOSURE TRAFFIC INSTALLATION

UGS

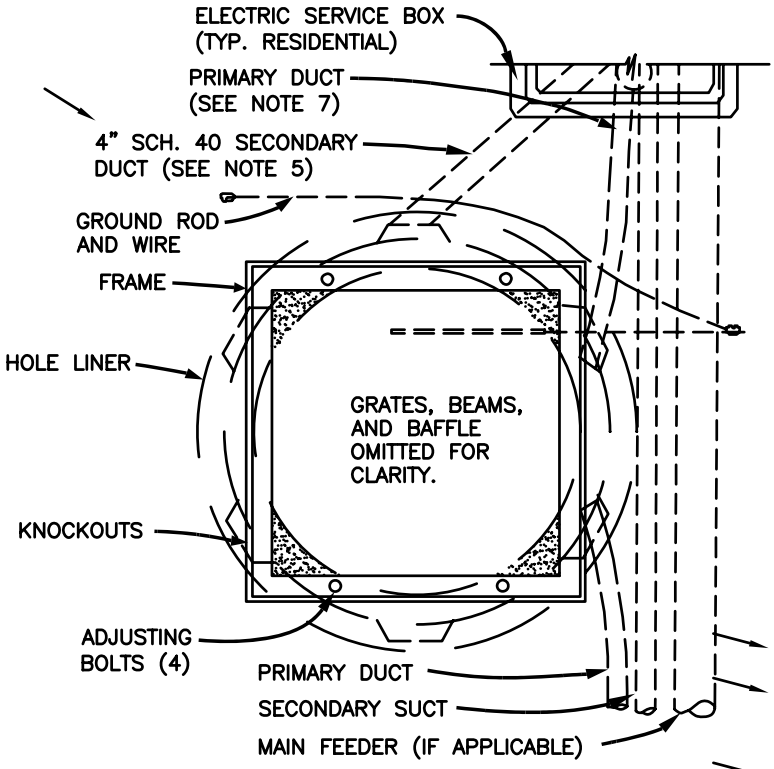

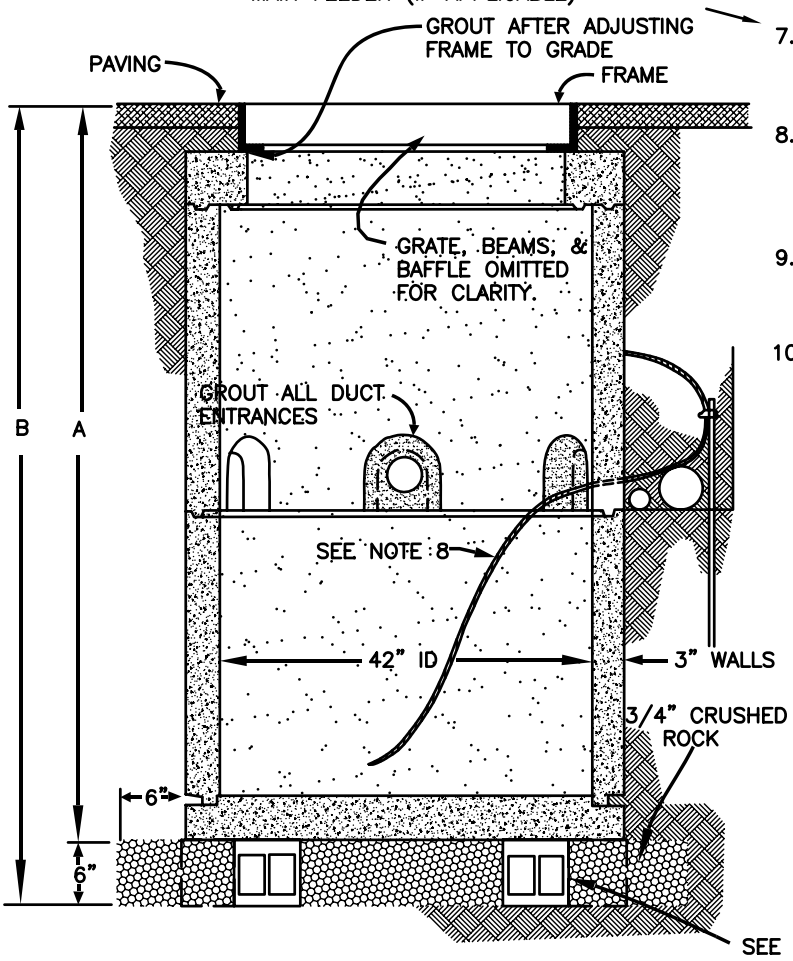

NOTES:

1. SEE UGS–734 FOR DETAILS AND DIMENSIONS OF ENCLOSURE. SEE UGS–735 FOR PARKWAY INSTALLATION.
2. LOCATE ENCLOSURES AS SPECIFIED ON THE JOB DRAWINGS WITH VERIFICATION BY R.P.U. INSPECTOR.
3. ENCLOSURES SHALL BE SET ON 3–6"X6"X16" CONCRETE BLOCKS, SET ON THEIR SIDES, SO PLACED AS TO SUPPORT THE ENCLOSURE. BLOCKS TO BE SET LEVEL AND TO GRADE ON A BASE COMPACTED TO 90%, AND INSPECTED BEFORE SETTING VAULT.
4. TOP OF ENCLOSURE COVER FRAME TO BE SET 1/8" TO 1/4" ABOVE FINISH GRADE.
5. USE END BELLS ON ALL CONDUIT RUNS.
6. THE EXCAVATION IS TO BE BACK FILLED WITH SAND SLURRY, AND COMPACTED, AFTER THE INSTALLATION OF DUCTS IS INSPECTED.
7. DUCTS MUST ENTER KNOCKOUTS AT UP TO A 60° ANGLE FROM THE CENTER LINE OF THE TRENCH.
8. INSTALL 2–5/8"X96" COPPER GROUND RODS A MINIMUM OF 6' ON CENTER WITH 1/0 BARE COPPER WIRE WITH 4' A TAIL LEFT IN THE ENCLOSURE. PER UGS–225
9. THE UPPER SHAFT SECTION WITH 2 KNOCKOUTS AT 60° SHOULD BE TO CENTER LINE OF TRENCH.
10. ALL BTE'S SHALL BE FURNISHED WITH STAINLESS STEEL PENTA HEAD CAP SCREWS TO SECURE THE COVER.

DIMENSIONS	A*	B*
JENSEN	88 1/2"	94 1/2"

* RECOMMENDED ADDING 1 1/2" MIN. FOR ADJUSTMENT