# BURIED TRANSFORMER ENCLOSURE BAFFLE

RIVERSIDE PUBLIC UTILITIES DEPT.-UNDERGROUND STRUCTURES

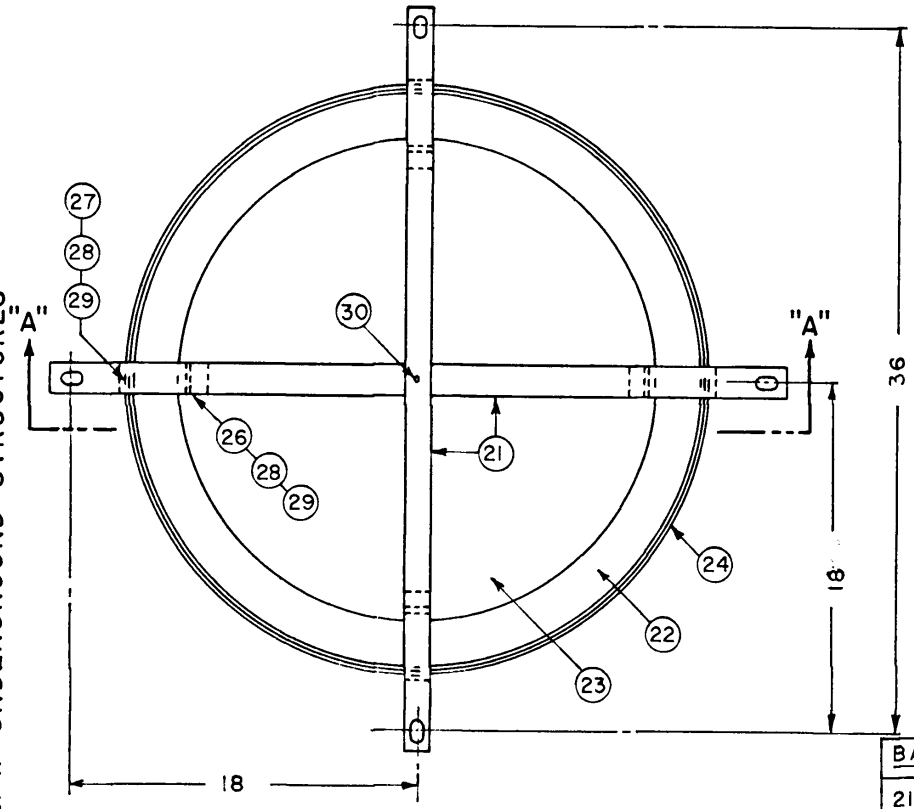


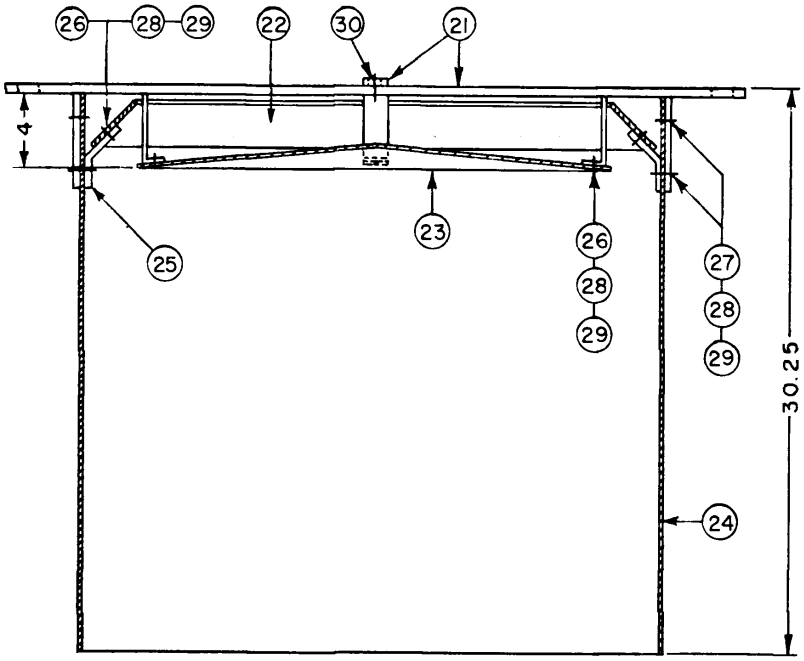


| BAFFLE | | QTY |
|---|---|---|
| 21 | SUPPORT | 2 |
| 22 | BAFFLE | 1 |
| 23 | TAMPER SHIELD | 1 |
| 24 | CYLINDER | 1 |
| 25 | ANGLE SUPPORT | 4 |
| 26 | SCR, HEX. H. STL, GALV, .25-20 X .62 | 8 |
| 27 | SCR, HEX. H., STL, GALV, .25-20 X .88 | 8 |
| 28 | WASH., SPG. STL, GALV, .25 | 16 |
| 29 | NUT, HEX, STL, GALV, .25-20 | 16 |
| 30 | RIVET, STL, GALV, .25 DIA. X 1 | 1 |
| SUPPORT 21 | | |
| 31 | BAR | 1 |
| 32 | ANGLE SUPPORT | 2 |
| 33 | BAR | 2 |

SECTION "AA"

NOTE:
FINISH- ETCH SURFACE WITH PHOSPHORIC ACID CLEANER, OR PRIME WITH SURFA-PREP #100 AND PAINT WITH ONE COAT OF SUBOX #7 BLACK ENAMEL.
ALTERNATE FINISH- COAT COMPLETE ASSEMBLY WITH BITUMEN.

GEN. SUPT. / CHIEF ENGR.

# BURIED TRANSFORMER ENCLOSURE BAFFLE



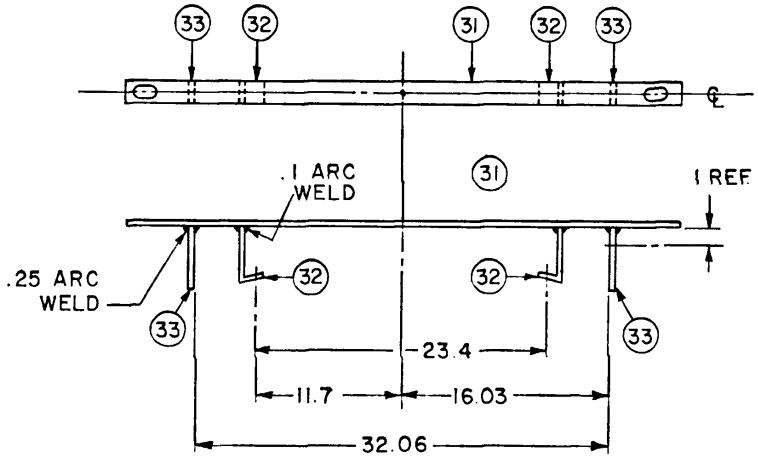


SUPPORT
HOT DIP GALVANIZED AFTER WELDING

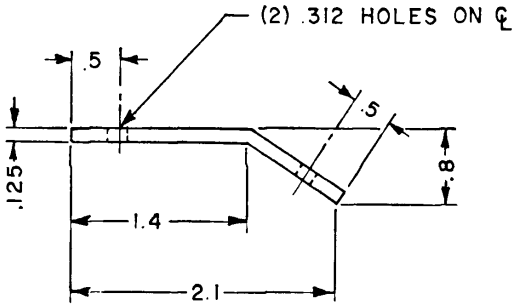


25
STEEL, HOT DIP GALVANIZED
.125 X 1 X 2.4 DEV.

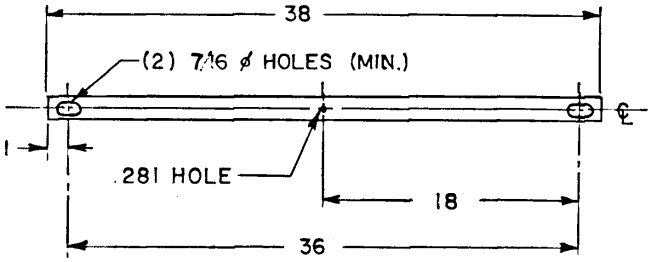


31
STEEL, .25 X 1 X 42

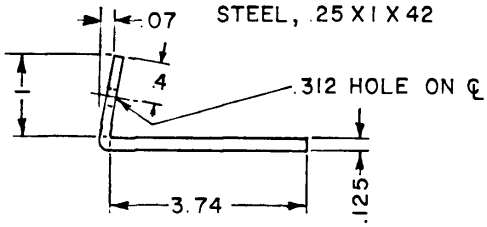


32
STEEL, .125 X 1 X 4.74 DEV.

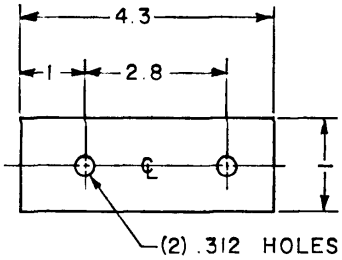


33
STEEL, .25 X 1 X 4.3

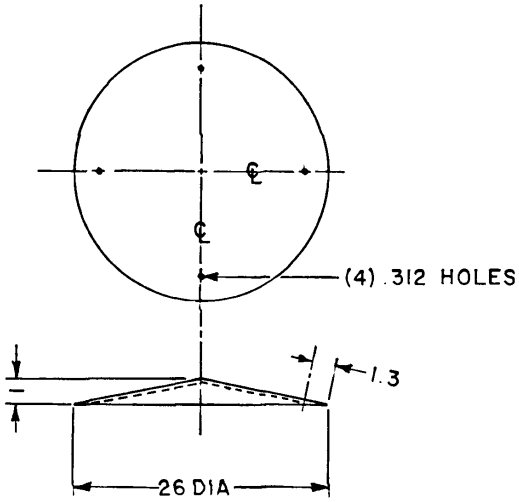


23
GALVANIZED STEEL, 22 GAGE

GEN. SUPT. / CHIEF ENGR.

# BURIED TRANSFORMER ENCLOSURE
## BAFFLE

RIVERSIDE PUBLIC UTILITIES DEPT.- UNDERGROUND STRUCTURES

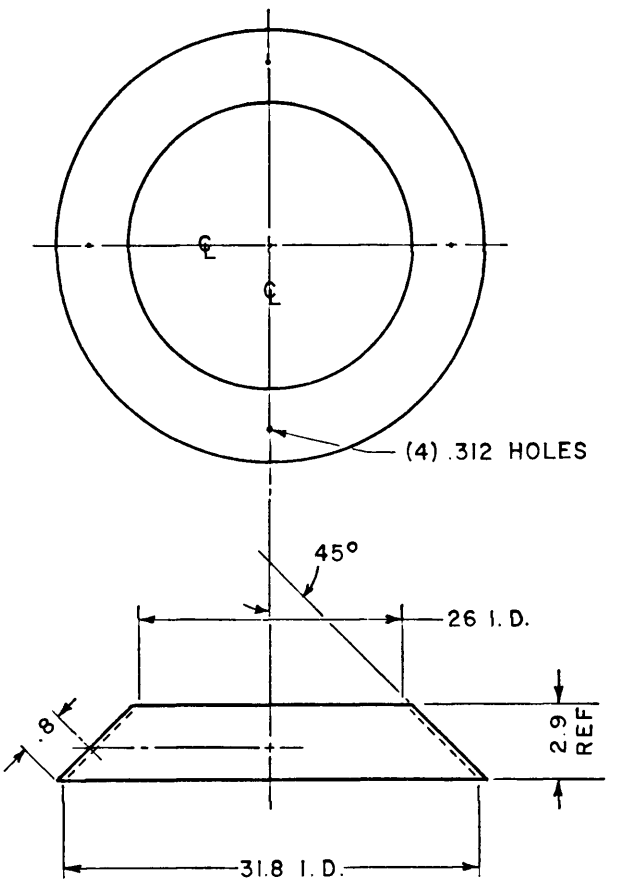


22

GALVANIZED STEEL, 22 GAGE

NOTE:

1. ALL INSIDE RADII = .125

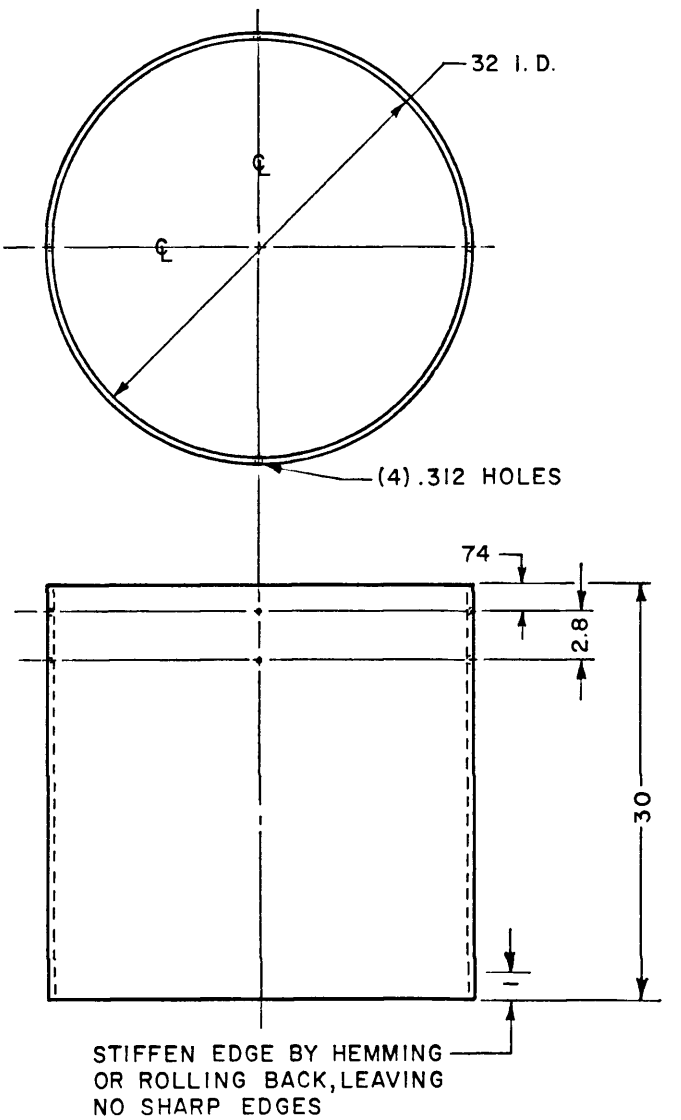


24

GALVANIZED STEEL, 26 GAGE

GEN. SUPT. / CHIEF ENGR.