SWITCH GEAR FIBERGLASS BOX PAD FOR SERIES 9, 10, & 11 SWITCHES

UGS

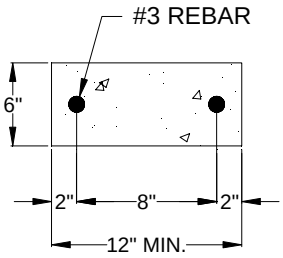

CAP DETAIL

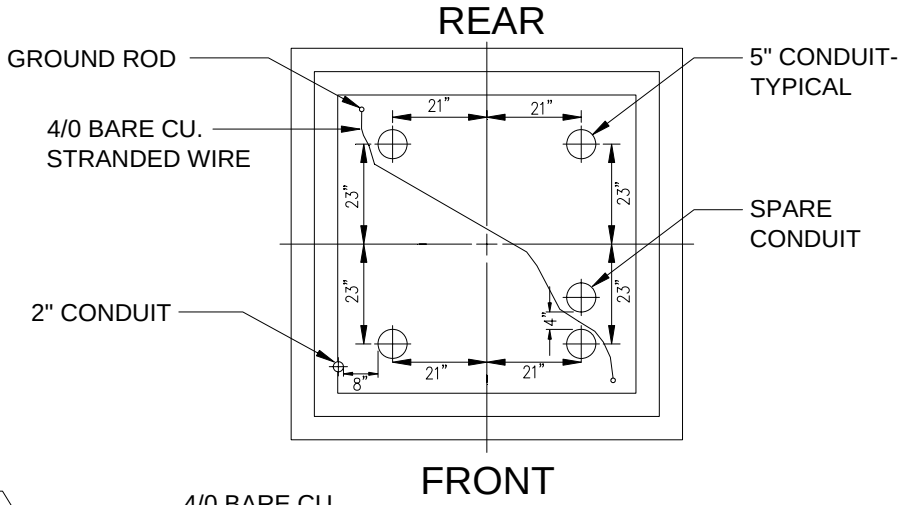

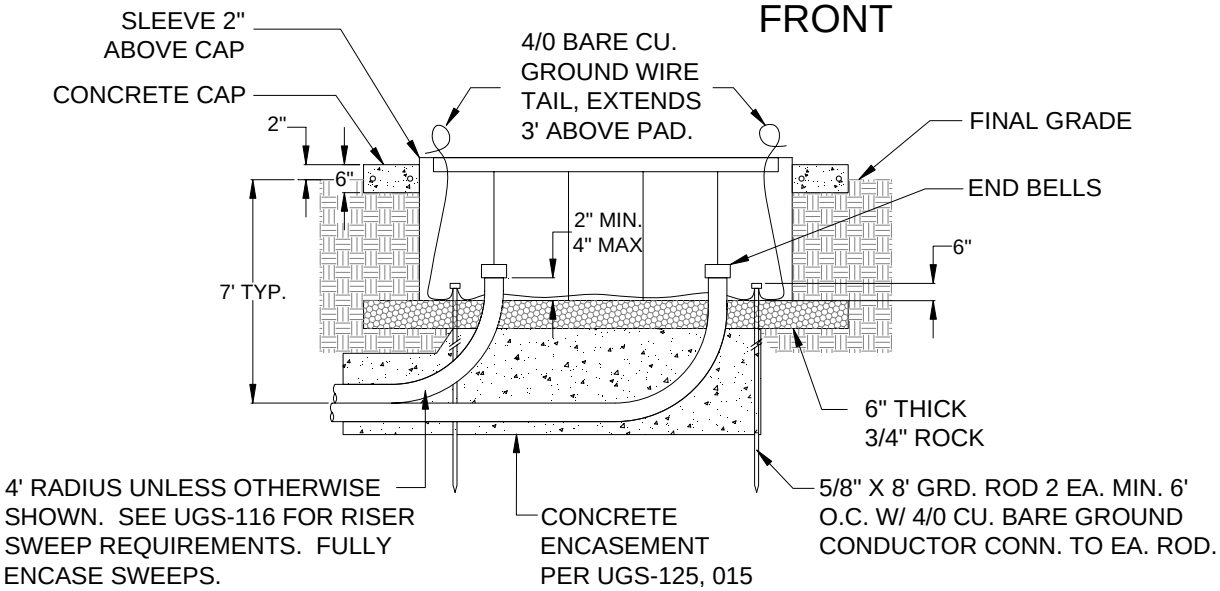

Notes:

1. See UGS-011 for box pad requirements.
2. Termination compartments of the switchgear are not to be installed to the front or rear of the box pad.
3. Where required, spare conduits will be installed as shown above.
4. Barrier posts are required per UGS-290.
5. Refer to UGS-225 for ground rod installation.
6. Conduit sweeps shall be encased with concrete per UGS-125 and UGS-015 mix #4003.
7. Bracing of structure wall shall be required when backfilling.

Revision

DATE: 8/29/07

REVISION: Updated Notes

APPROVAL: Dave Redding DATE: 9/19/07