Revision

DATE: 4/12/06

REVISION: Revised note #2 & 3

DATE: 4/27/06

APPROVALS: Dave Redding

RIVERSIDE PUBLIC UTILITIES

SWITCHGEAR FIBERGLASS BOX PAD FOR SERIES 9, 10,& 11

UGS

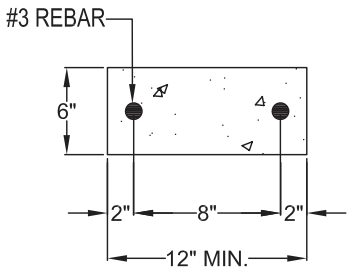

CAP DETAIL

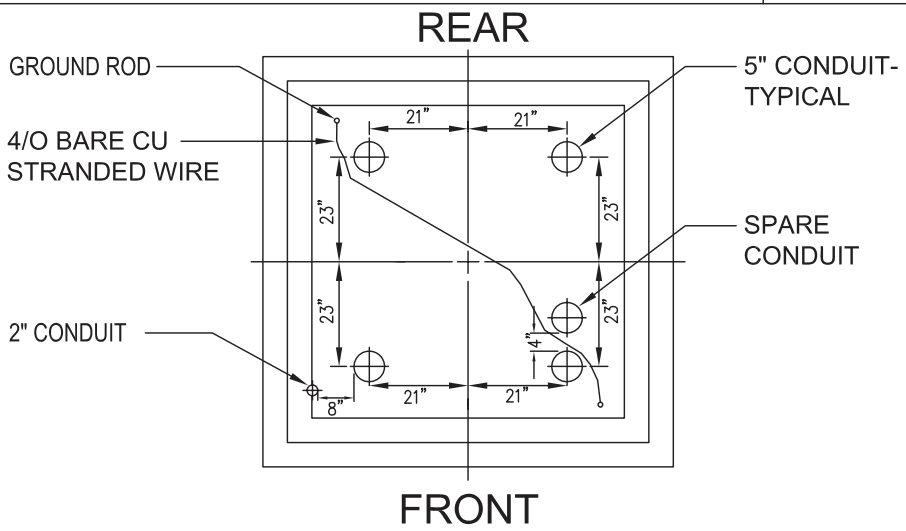

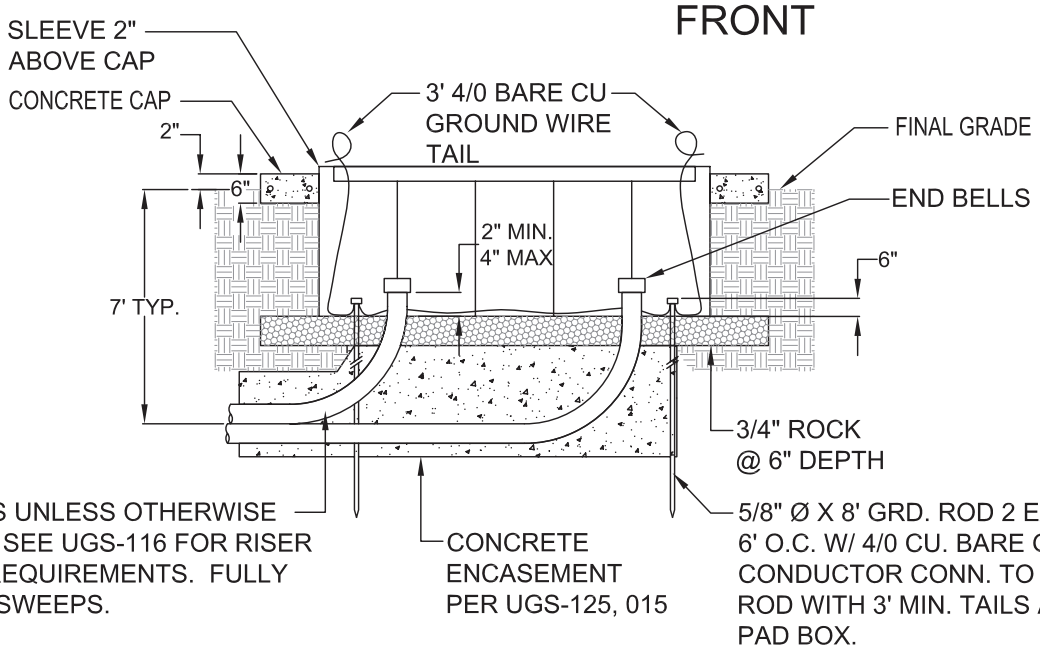

NOTES:

1. See UGS-011 for box pad requirements.
2. Termination compartments of the switchgear are to be installed to the front and rear of the box pad.
3. Where required, spare conduits will be installed as shown above with end bells.
4. Barrier posts are required per UGS-290.
5. Refer to UGS-225 for ground rod installation.
6. Conduit sweeps shall be encased with concrete per UGS-125 and UGS-015 mix #4003.
7. Bracing of structure wall is required when backfilling.