Revision

DATE: 2/16/05

REVISION: Grounding Under Pull Box

DATE: 3/2/05

APPROVAL: Dave Redding

CITY OF RIVERSIDE PUBLIC UTILITIES

PRECAST PULL BOX INSTALLATION BOTTOMLESS

UGS

Notes:
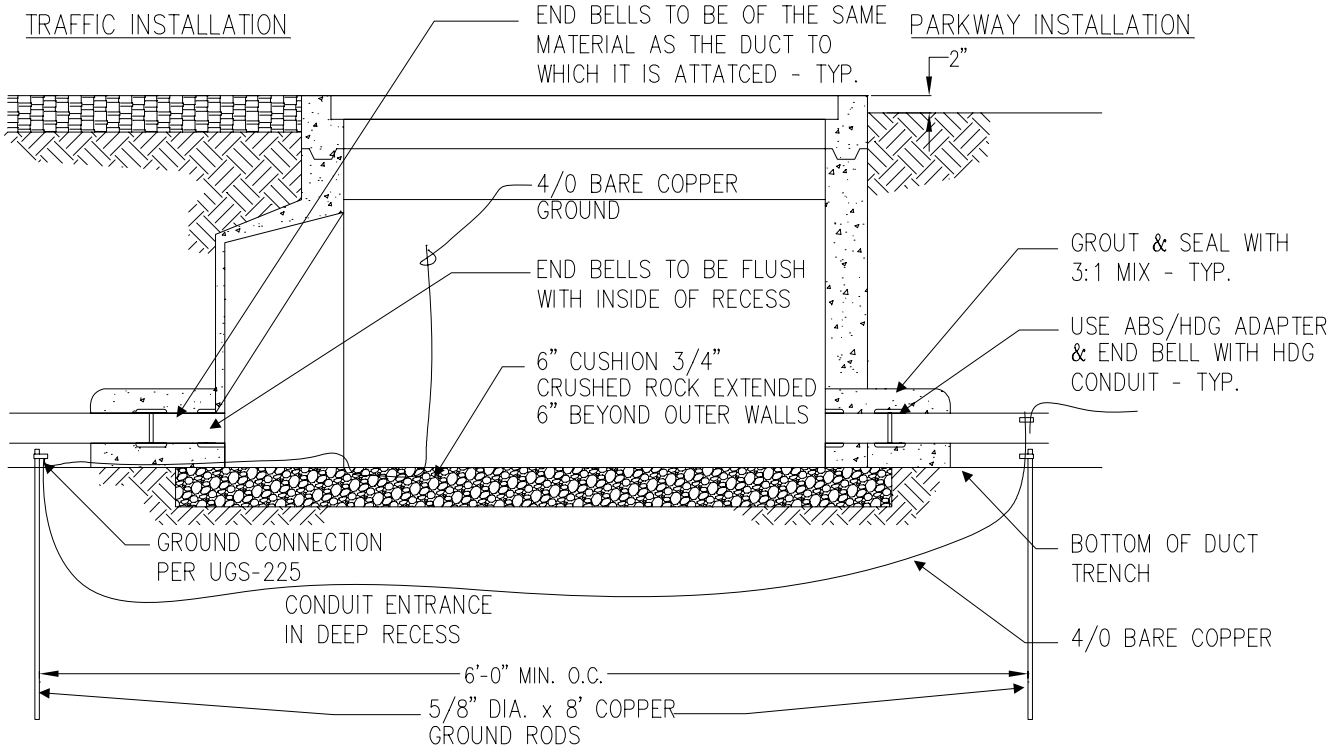
1. See UGS-007, UGS-301, UGS-302, & UGS-303 for details and dimensions.
2. Locate pull boxes as specified on the job drawings with verification by construction inspector.
3. End bells are required at conduit entrances other than in intercept pull box installations.
4. Protect end bells and/or conduits from the entrance of grout and debris.
5. See UGS-310 for installation of floored pull boxes.
6. All pull boxes shall be furnished with stainless steel, penta head cap screws for cover securing.
7. Provide and install (2) 5/8"- X 8' copper ground rods with 6' minimum spacing. Ground rods shall be connected with a continuous 4/0 bare copper ground wire. The wire shall run around the exterior of pull box and extend 3' into the pull box. At the discretion of the inspector, 60' of 4/0 bare copper ground wire may be installed in trench bottom in lieu of ground rods if rocky soil interferes with ground rod installation.