PRECAST PULL BOXES
2' x 3'

FOR PULL BOX SPECIFICATIONS REFER TO UGS-007.
FOR INSTALLATION DETAILS REFER TO UGS-310 OR 310.1.
ALL PULL BOXES SHALL BE FURNISHED WITH STAINLESS STEEL, PENTA HEAD CAP SCREWS FOR COVER SECURING.

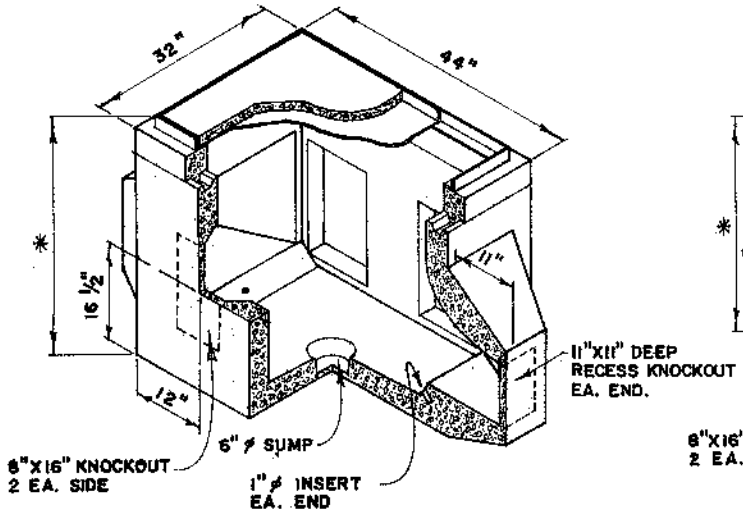

RECESSED (STANDARD) PULL BOX
PARKWAY-ITEM NO. PR-1 w/ CS-1 OR CC-1 COVER.
TRAFFIC -ITEM NO. PR-2 w/ CS-2 COVER.
(SHOWN WITH CC-1, CONCRETE PARKWAY COVER)

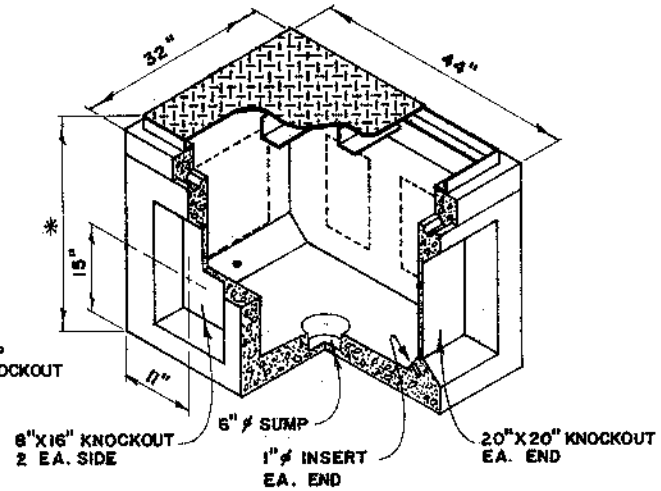

NON-RECESSED PULL BOX
PARKWAY-ITEM NO. PS-1 w/ CS-1 OR CC-1 COVER.
TRAFFIC -ITEM NO. PS-2 w/ CS-2 COVER.
(SHOWN WITH CS-2, STEEL TRAFFIC COVER)

* NOTE - QUIKSET BOX DEPTH 40".
BROOKS PRODUCTS BOX DEPTH 41".

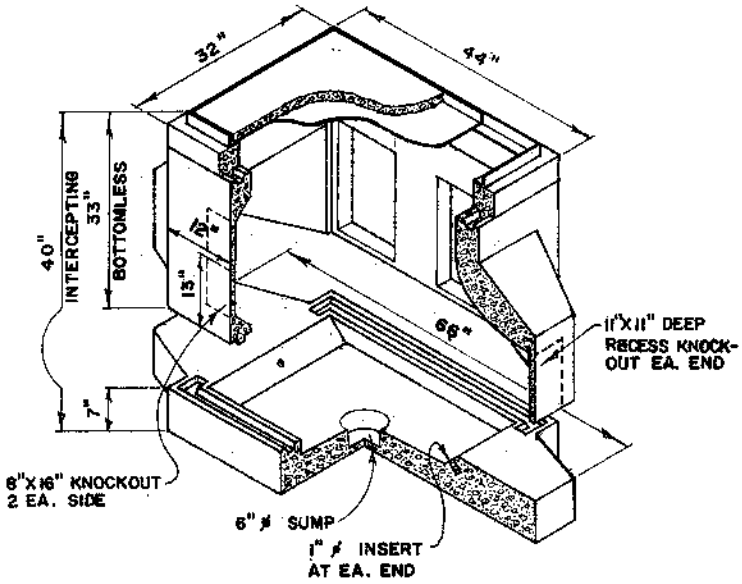

INTERCEPTING PULL BOX
PARKWAY-ITEM NO. PI-1 w/ CS-1 OR CC-1 COVER.
TRAFFIC - ITEM NO. PI-2 w/ CS-2 COVER.

RECESSED BOTTOMLESS †
PARKWAY-ITEM NO. PX-1 w/ CS-1 OR CC-1 COVER.
TRAFFIC-ITEM NO. PX-2 w/ CS-2 COVER.
(SHOWN WITH CC-1, CONCRETE PARKWAY COVER)

† DOES NOT INCLUDE FLOOR SECTION

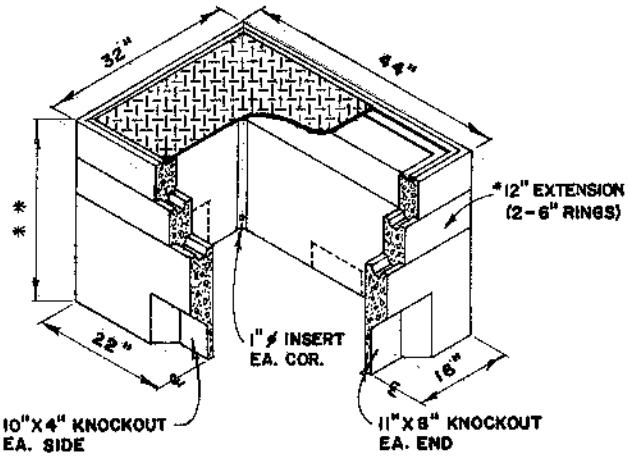

BOTTOMLESS PULL BOX
PARKWAY-ITEM NO. PB-1 w/ CS-1 OR CC-1 COVER.
TRAFFIC - ITEM NO. PB-2 w/ CS-2 COVER.
(SHOWN WITH CS-1, STEEL PARKWAY COVER)

* QUIKSET ONLY - BROOKS NO EXTENSION RINGS REQ'D
** NOTE - QUIKSET BOX DEPTH 36".
BROOKS PRODUCTS BOX DEPTH 33"

REVISION

GEN. SUPT./CHIEF ENGR.

LATEST REVISION: added note

UGS-301