SLAB COVER DETAILS POURING & FRAMING

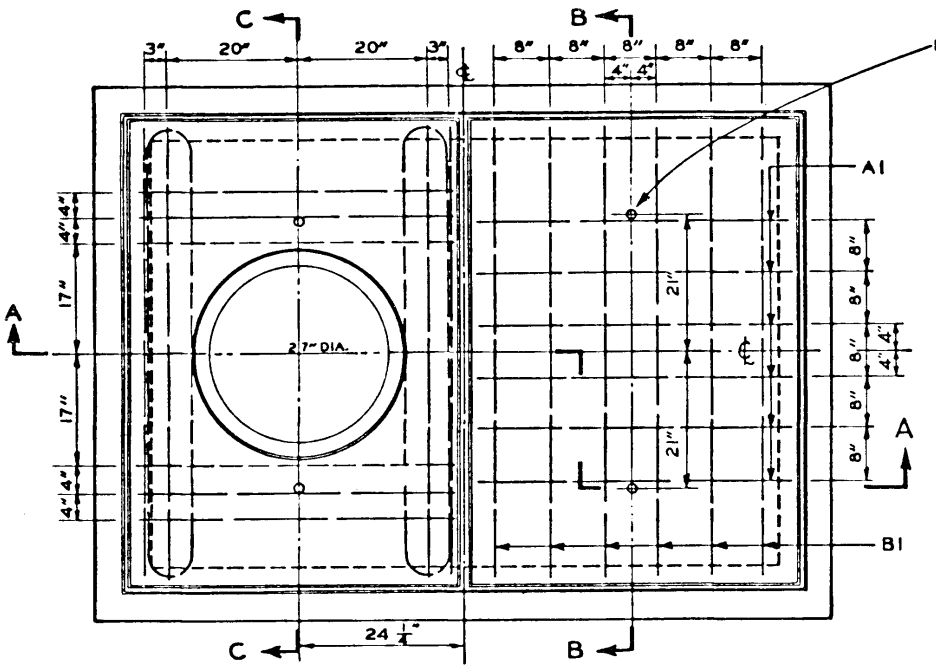

PLAN

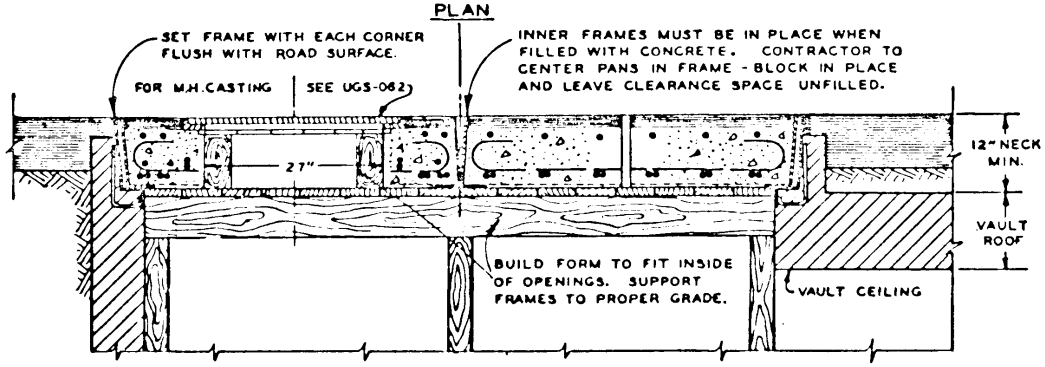

SECTION "AA"

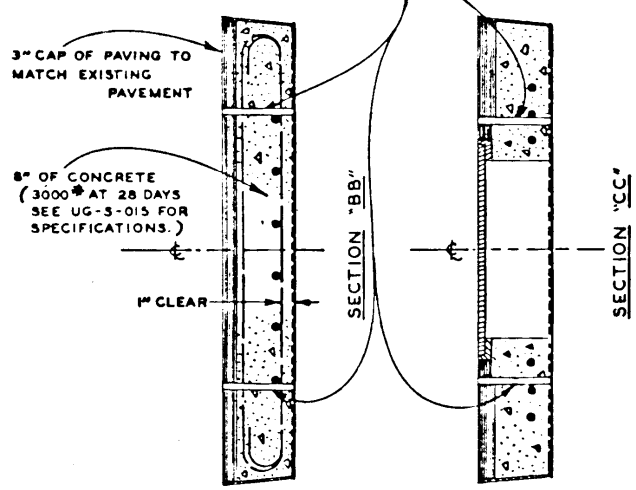

NOTE: SAME NUMBER OF STEEL REINFORCING SHAPES ARE USED IN EACH HALF OF COVER.

FOR STEEL SCHEDULE SEE DWG. No. UGS-091

MANHOLE CASTING SHOWN IS UGS-062 — A TRAFFIC TYPE IRON CASTING - TO BE INSTALLED AS SHOWN ONLY WHEN SPECIFIED.

PANS REQUIRE 1.29 CU. YD. OF CONCRETE
.48 CU. YD. OF PAVING MAT'L
1.77 TOTAL FOR NORMAL INSTALLATION (WITHOUT M.H. CASTING)