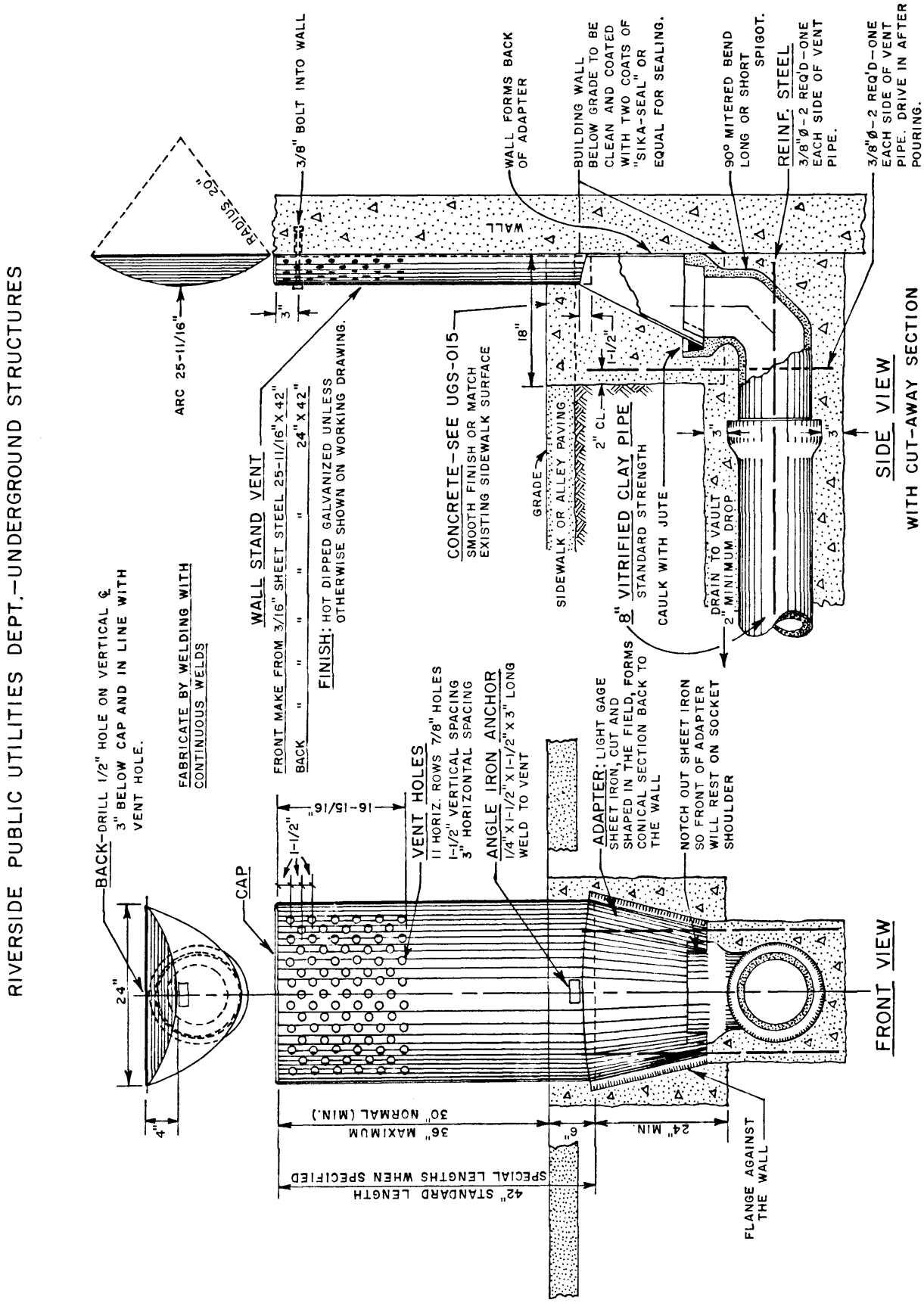WALL STAND VENT DETAIL AND INSTALLATION