STANDPIPE VENTS WITH METER PIPE

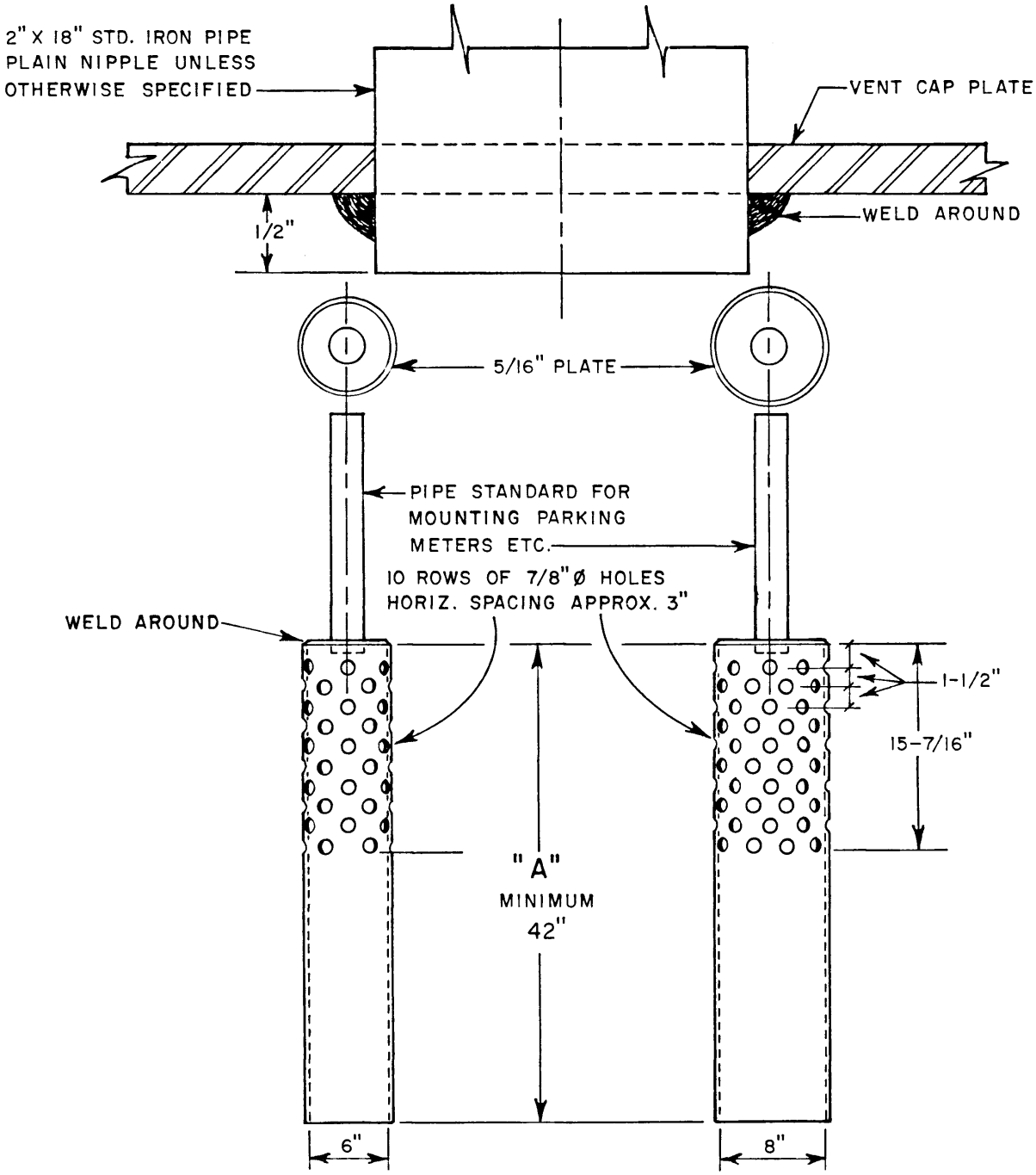

1. DIMENSION "A" TO BE 42" UNLESS OTHERWISE SHOWN ON WORKING DRAWING.

2. MATERIAL: STEEL OR IRON, PIPE OR CASING.

3. FINISH: HOT DIP GALV. UNLESS OTHERWISE SHOWN ON WORKING DRAWING.