VAULT COVER
WITH NECKING AND GRADE RING
(PRECAST CONCRETE)

SEE UGS-005 FOR VAULT REQUIREMENTS

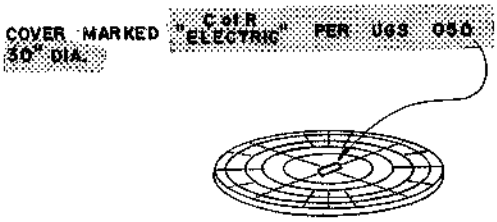

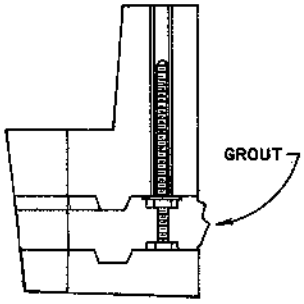

CROSS SECTION OF
COVER CORNER
(TYPICAL ADJUSTMENT)

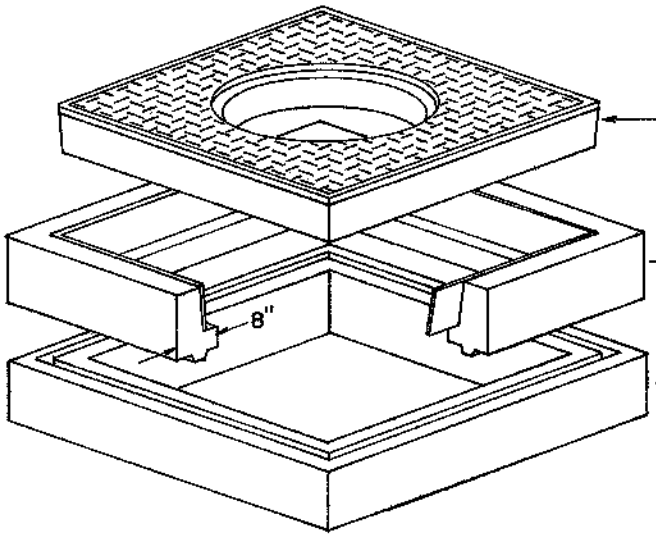

ITEM	CATALOG NUMBER		CLEAR OPENING DIMENSIONS	
	QUICKSET	BROOKS	QUICKSET	BROOKS
COVER (concrete) W/NECKING	PVCN-4848	350 VCN-12	COVER 48"x48"x8"	COVER 48"x48"x6"
			NECK 48"x48"x12"	NECK 48"x48"x12"
	PVCN-4860	355 VCN-12	COVER 48"x60"x6"	COVER 48"x60"x6"
			NECK 48"x60"x12"	NECK 48"x48"x12"
TRAFFIC COVER	A-1106	A-1106	30" DIA.	30" DIA.

REVISION APPROVED

indicates latest revision