Revision

WATER | ENERGY | LIFE
CITY OF RIVERSIDE PUBLIC UTILITIES

PRECAST CONCRETE PJC SLAB BOX

UGS

ITEM NO.	DESCRIPTION	QTY.
1	PJC SLAB BOX TOP (96" x 66" x 8" PAD SURFACE (1.125 TAPER))	1
2	PJC SLAB BOX BOTTOM (78" x 48" x 42" ENCLOSED AREA)	1
3	POLYMER CONCRETE COVER (64 5/8" x 26 3/16" x 1 3/4")	1

Notes:

Structure designed in accordance with:

- AASHTO H-20 traffic bridge loading
- ASTM C-857 standard practice for minimum
- structural design loading for underground
- precast concrete utility structures
- American concrete institute ACI 318-05

Concrete compressive strength F'c = 5500 PSI

Reinforcement in accordance with ASTM A-706 with a yield strength of Fy = 60,000 PSI.

6" minimum compacted granular material recommended for sub-base for ease of installation and even load distribution.

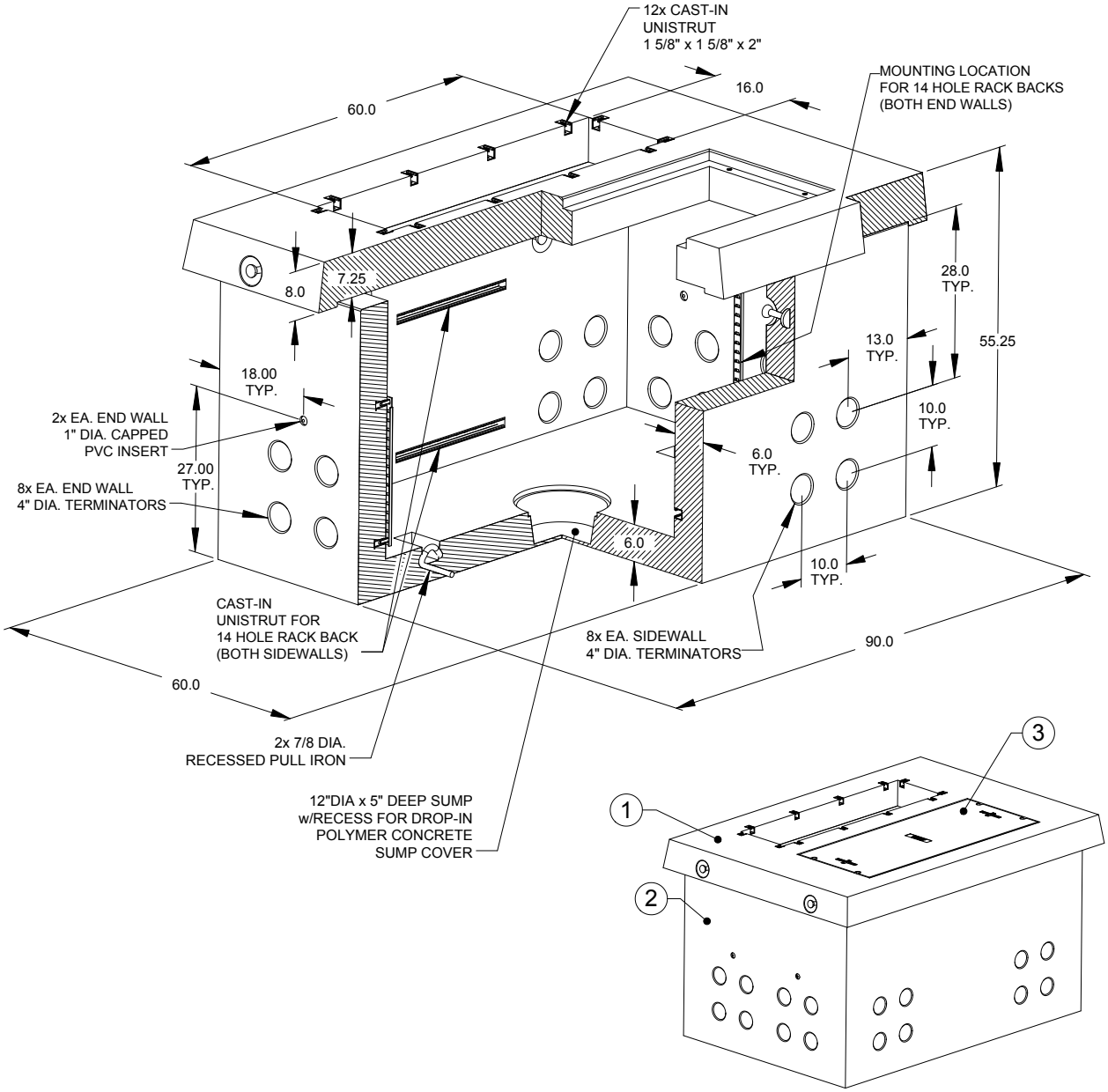

REVISION: New Standard
REVISION DATE: 10/12/10
APPROVED BY: George Hanson
APPROVED DATE: 11/05/10
PREPARED BY: JRS
CHECKED BY: CA