PME SWITCH GEAR MANHOLE FOR SERIES 11F, 52 & 53 GAS SWITCH (LEFT SIDE OPENING)

UGS

WATER | ENERGY | LIFE
CITY OF RIVERSIDE PUBLIC UTILITIES

ITEM NO.	DESCRIPTION	QTY.
1	PME 11F, 52 & 53 MANHOLE TOP "LEFT" (126" x 60" x 42" ENCLOSED AREA)	1
2	PME 11F, 52 & 53 MANHOLE BOTTOM (126" x 60" x 42" ENCLOSED AREA)	1
3	HDG LADDER	1

Following Material to be Shipped with Manhole

a) 7/8" x 1 3/4" conseal gasket (33ft. required)
b) 1/2" x 6" galvanized "J" bolts attached to 1/2" loop inserts cast-in the top section (4 req'd)
c) A-1106 polymer concrete "Riverside Electric" cover (12-10-13) attached to cast-in A-1106 C.I. Ring with (4) 5/8" x 1/2" S.S. hex head bolts with captive S.S. washer prior to shipment (1 req'd)
d) (8) 18 hole galv. cable racks with bolts (16).
e) HDG Ladder

Notes:

- Manhole designed for parkway loading using 5500 PSI [37.92MPa] compressive strength concrete and 60,000 PSI [413.2MPa] yield strength ASTM A-706 steel reinforcement per calc. #31649.
- Manhole to be placed on min. 6" crusher run for ease of installation and even load distribution.
- Minimum Excavation Size: 7'-0" x 12'-6" x Depth Req'd

Ordering Information:

Total weight of assembly as shown is 28,000 lbs.

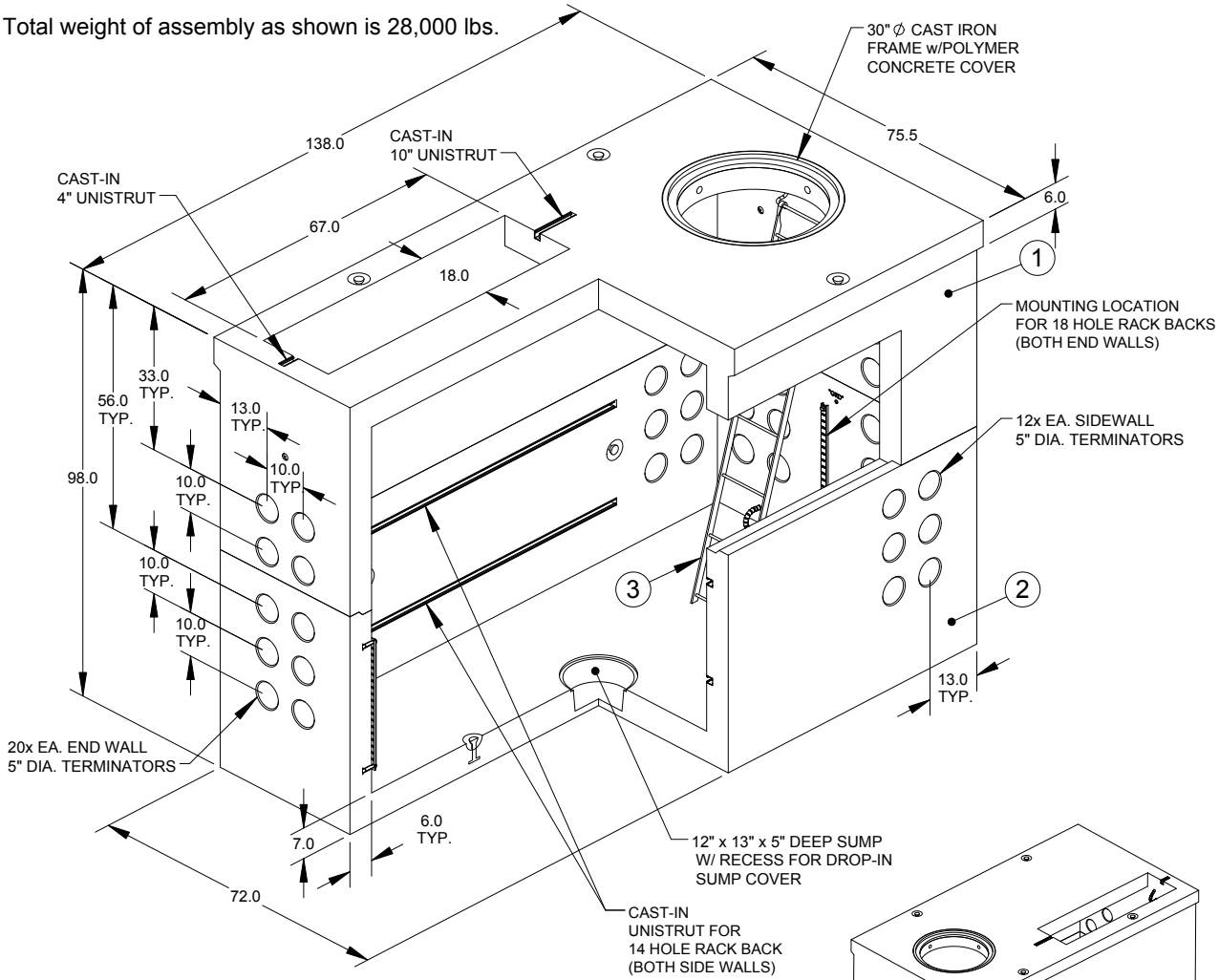

- SEE UGS-005 FOR MANUFACTURES PART #'S & MAN HOLE LID DETAILS.

Revision

REVISION: New Construction
REVISION DATE: 10/12/10

APPROVED BY: George Hanson
APPROVED DATE: 11/05/10

PREPARED BY: JSR
CHECKED BY: CA