Revision

WATER | ENERGY | LIFE
CITY OF RIVERSIDE PUBLIC UTILITIES

# PMH SWITCH GEAR MANHOLE FOR SERIES 9, 10 & 11 AIR SWITCHES

**UGS**

| ITEM NO. | DESCRIPTION | QTY. |
|---|---|---|
| 1 | PMH 9, 10 & 11 MANHOLE TOP (126" x 60" x 42" ENCLOSED AREA) | 1 |
| 2 | PMH 9, 10 & 11 MANHOLE BOTTOM (126" x 60" x 42" ENCLOSED AREA) | 1 |
| 3 | HDG LADDER | 1 |

Following Material to be Shipped with Manhole

a) 7/8" x 1 3/4" conseal gasket (33ft. required)
b) 1/2" x 6" galvanized "J" bolts attached to 1/2" loop inserts cast-in the top section (4 req'd)
c) A-1106 polymer concrete "Riverside Electric" cover (12-10-13) attached to cast-in A-1106 C.I. ring with (4) 5/8" x 1/2" S.S. hex head bolts with captive S.S. washer prior to shipment (1 req'd)
d) (2) 18 hole galv. cable racks with bolts (4).
e) HDG Ladder

Notes:

- Manhole designed for parkway loading using 5500 PSI [37.92MPa] compressive strength concrete and 60,000 [413.2MPa] yield strength ASTM A-706 steel reinforcement per calc. #31649.
- Manhole to be placed on a min. 6" crusher run for ease of installation and even load distribution.
- Minimum Excavation Size:7'-0" x 12'-6" x Depth Req'd

Ordering Information

Total weight of assembly as shown is 28,000 lbs.

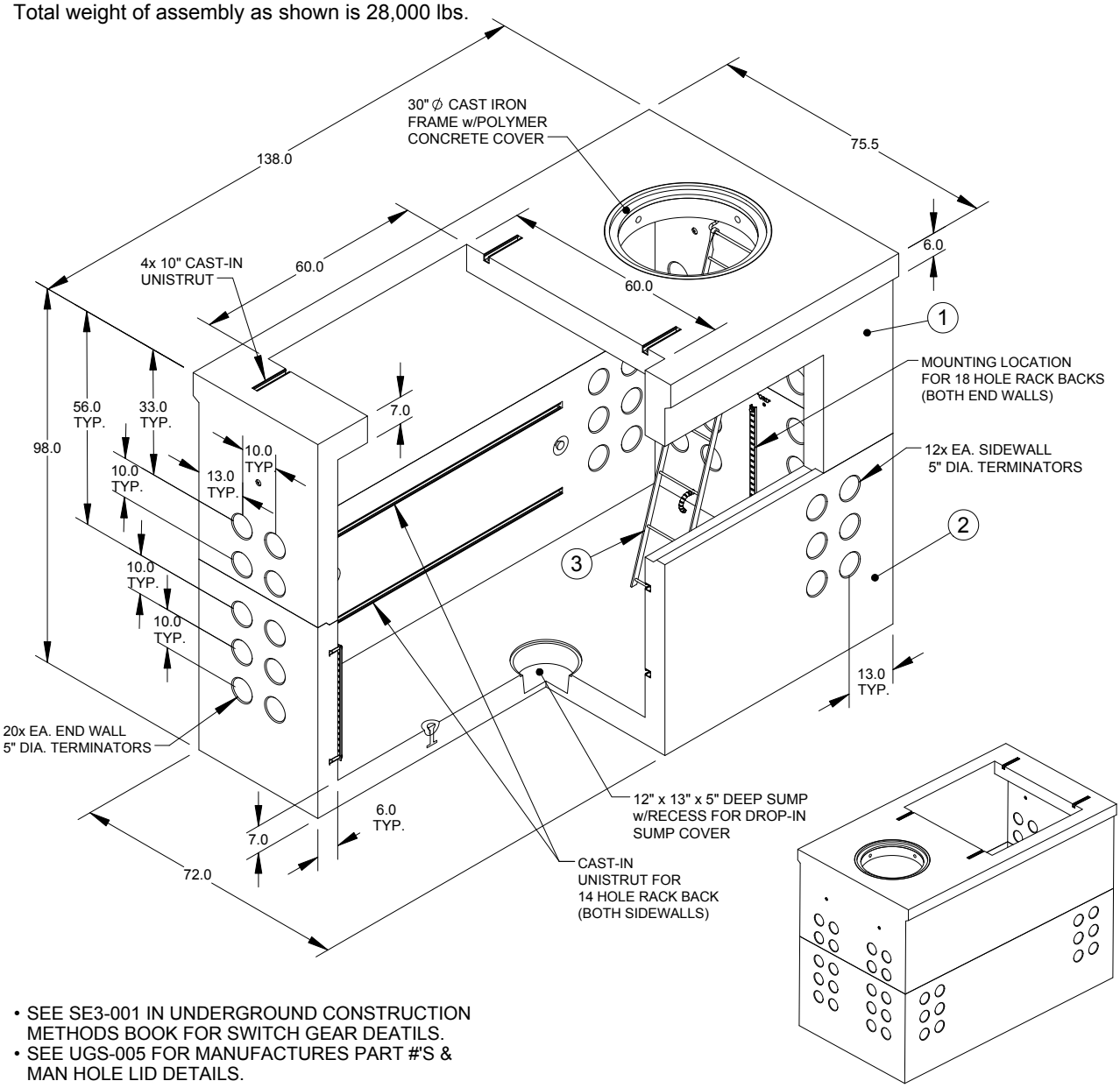


- SEE SE3-001 IN UNDERGROUND CONSTRUCTION METHODS BOOK FOR SWITCH GEAR DEATILS.
- SEE UGS-005 FOR MANUFACTURES PART #'S & MAN HOLE LID DETAILS.

REVISION: New Standard
REVISION DATE: 11/11/10
APPROVED BY: George Hanson
APPROVED DATE: 11/05/10
PREPARED BY: JRS
CHECKED BY: CA