Schematic of Wastewater Flow
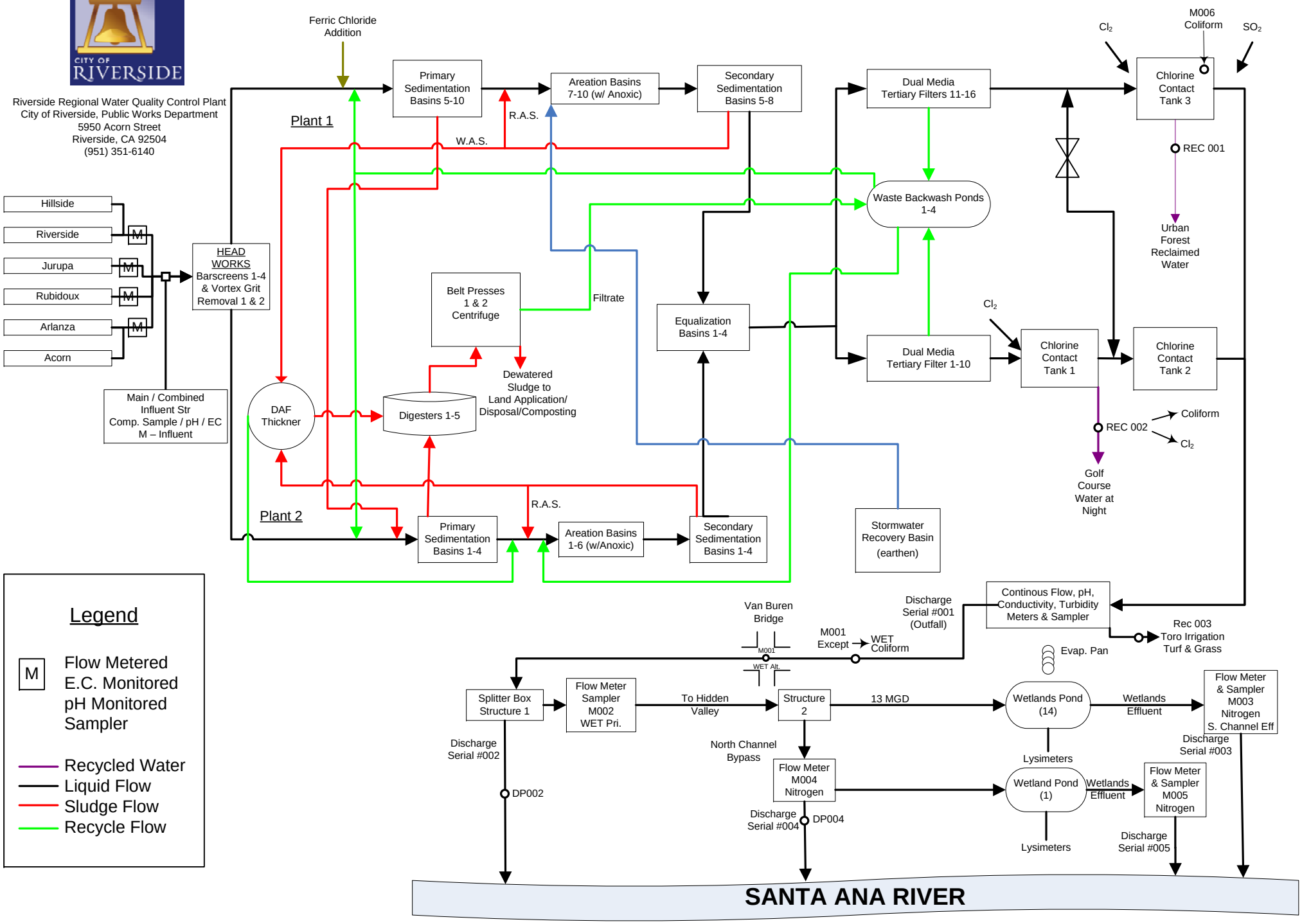
Riverside Regional Water Quality Control Plant
City of Riverside, Public Works Department
5950 Acorn Street
Riverside, CA 92504
(951) 351-6140