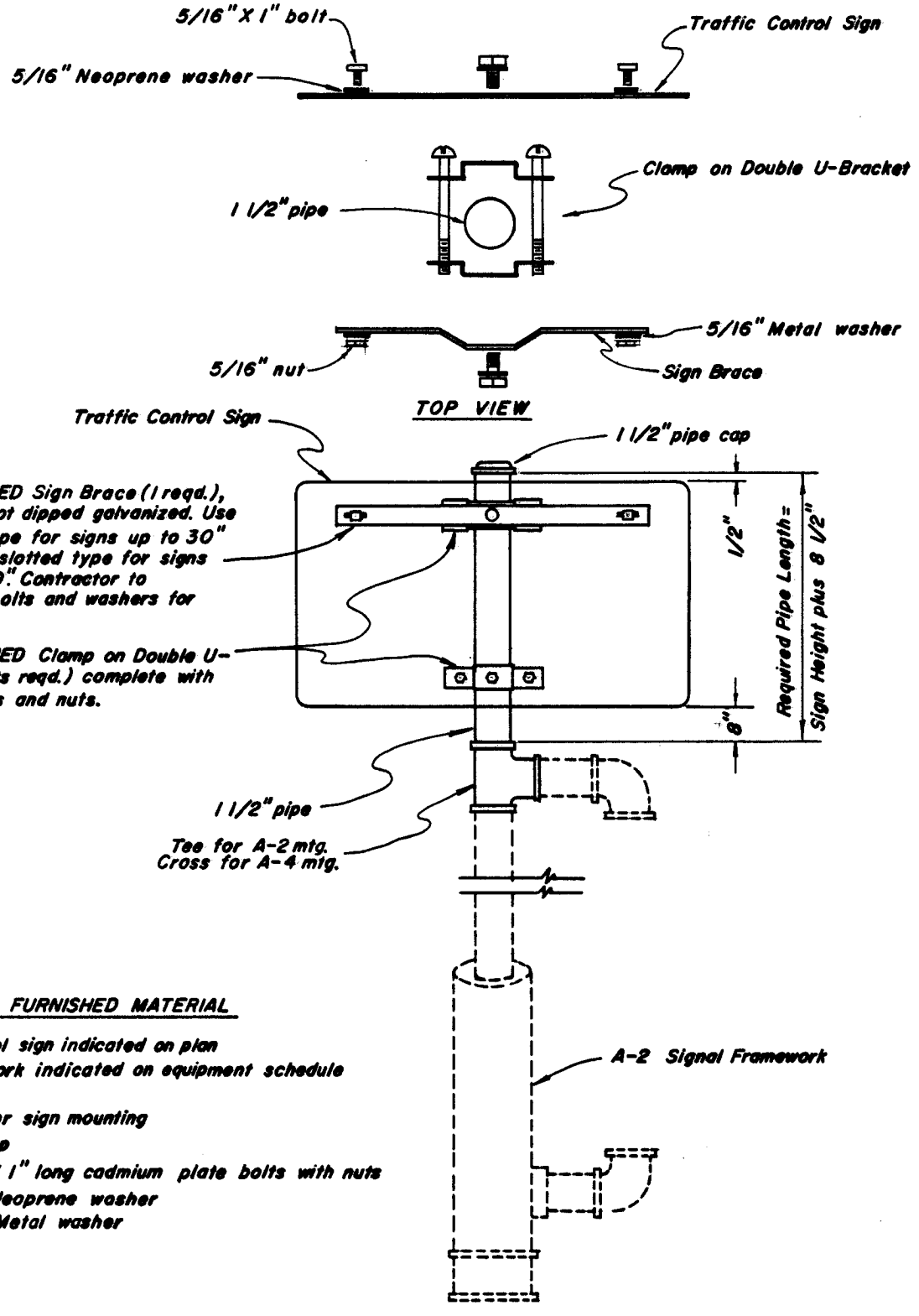

CONTRACTOR FURNISHED MATERIAL

Traffic Control sign indicated on plan
Signal framework indicated on equipment schedule
Tee or Cross
1 1/2" Pipe for sign mounting
1 1/2" Pipe cap
2 ea. – 5/16" X 1" long cadmium plate bolts with nuts
2 ea. – 5/16" Neoprene washer
2 ea. – 5/16" Metal washer

APPROVED _____ DATE 4-26-71
Director of Public Works

MARK	REVISIONS	APPR.	DATE

CITY OF RIVERSIDE
PUBLIC WORKS DEPT. TRAFFIC ENG. DIV.

SIGN MOUNTING DETAIL FOR TRAFFIC SIGNAL FRAMEWORK

STANDARD DRWG. #668