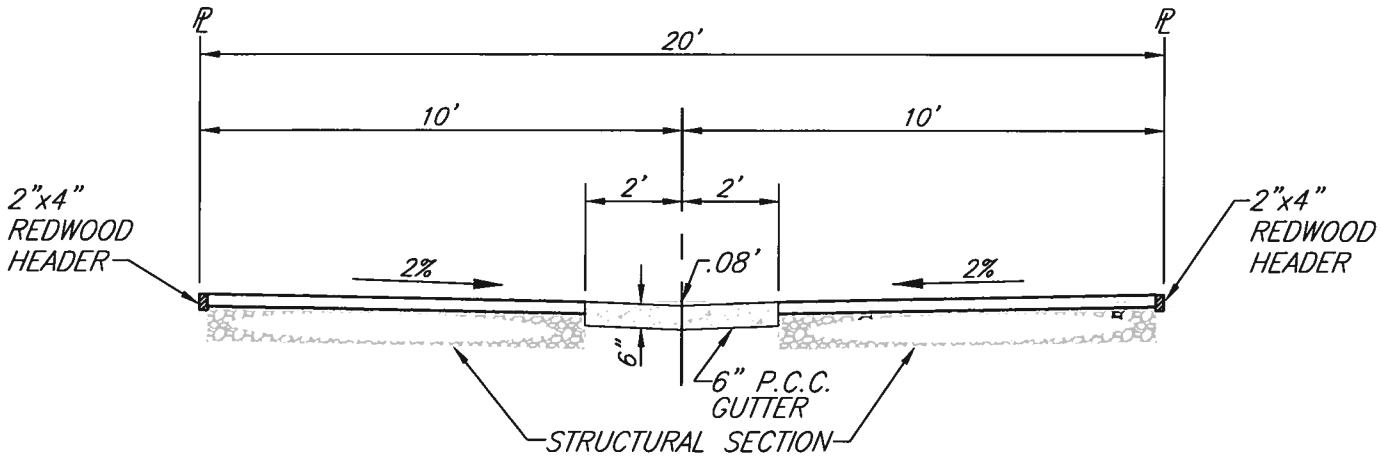

TYPE 1
GRADES LESS THAN 2.00%

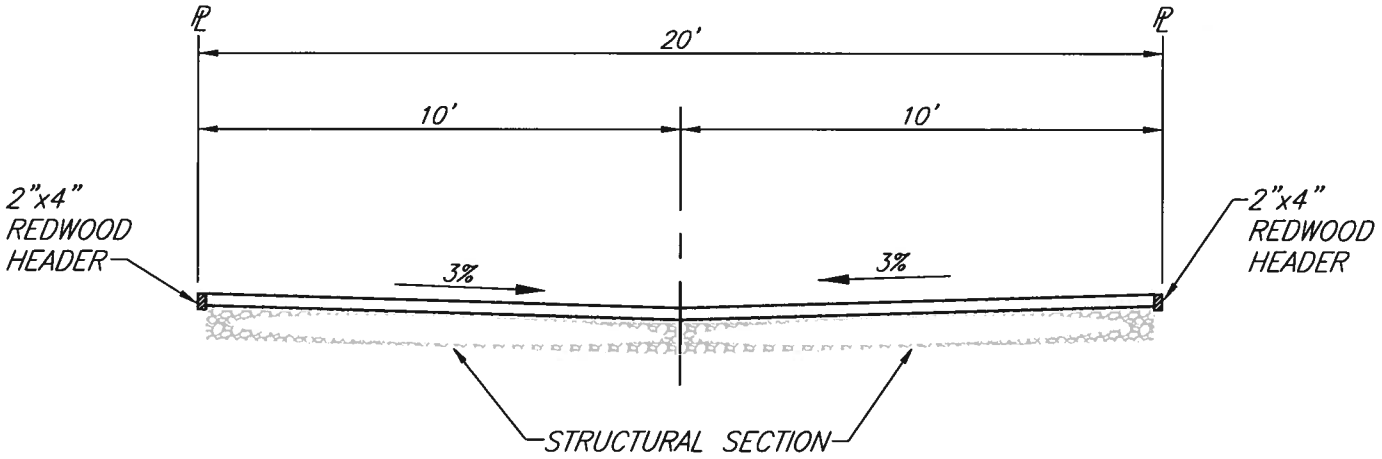

TYPE 2
GRADES OVER 2.00%

NOTES:

1. Alley width can be reduced in case of existing substandard right-of-way.
2. Cross fall may be adjusted to meet existing improvements (1% min.).
3. Redwood Headers required at edge of A.C. wherever edge is not protected by other structural materials, such as existing pavement, concrete, etc.
4. Concrete for valley gutter shall be Class 520-C-2500.
5. Structural section shall be as shown on plan (T.I.=5.)
6. Weakened plane joints shall be constructed in valley gutter at 10' intervals.

APPROVED BY
CITY ENGINEER — DATE 5/18/11

MARK	REVISIONS	APPR.	DATE

CITY OF RIVERSIDE
PUBLIC WORKS DEPARTMENT

ALLEY SECTIONS

STANDARD DRAWING NO. 110

Sheet 1 of 1