	CURVE 3		
	R	△	L
CURB	52'	220°	199.67'
R/W	60'	220°	230.38'

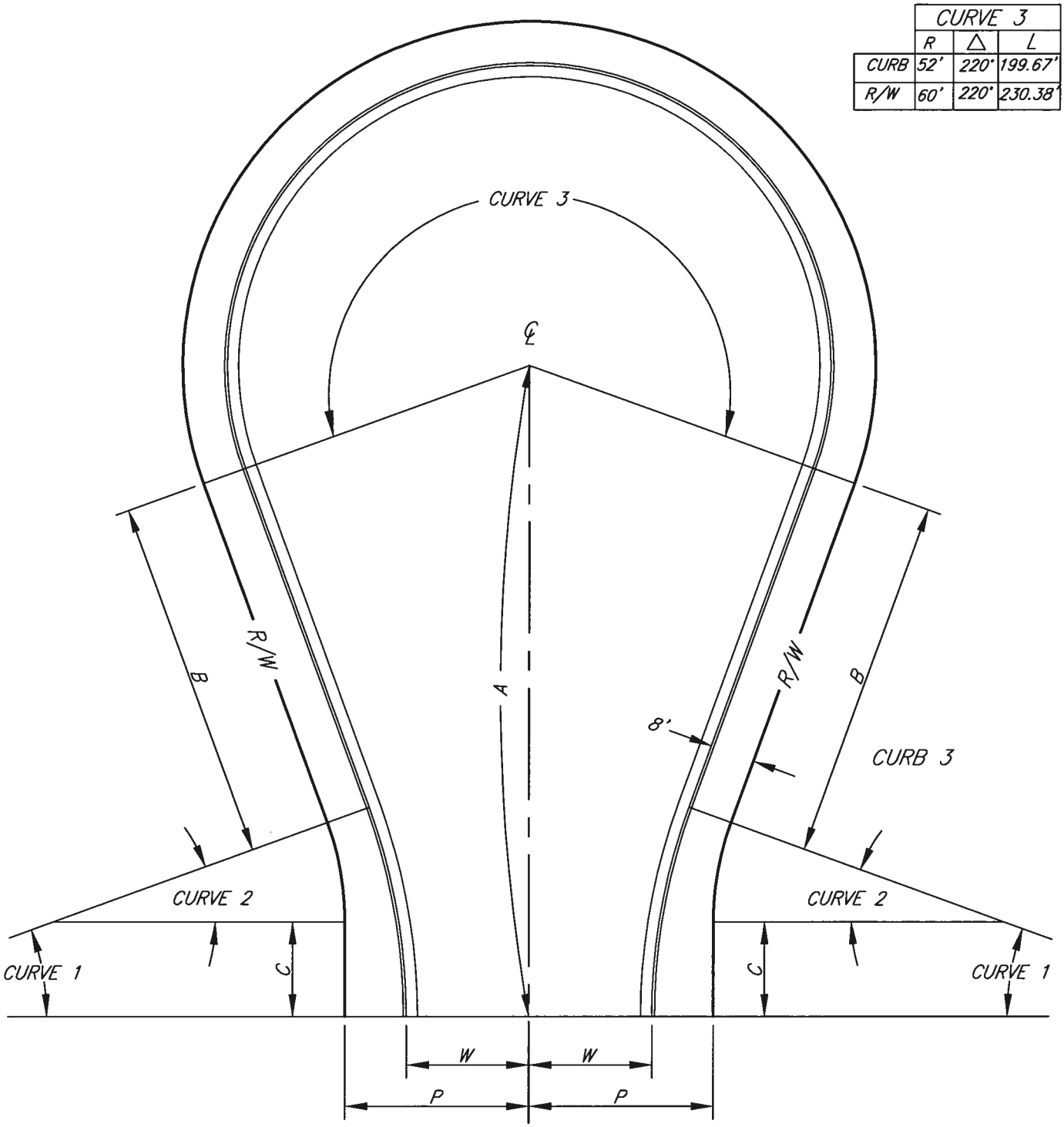

					CURB CURVE DATA								PVMT AREA S.F.
					CURVE 1				CURVE 2				
W	P	A	B	C	R	△	T	L	R	△	T	L	
20'	33'	116.49'	65.00'	28.36'	110'	20°	19.40'	38.40'	19.08'	20°	3.36'	6.66'	11,534
22'	33'	110.99'	59.15'	17.02'	110'	20°	19.40'	38.40'	52.24'	20°	9.21'	18.24'	11,404

APPROVED BY

CITY ENGINEER — DATE 5/18/11

MARK	REVISIONS	APPR.	DATE

CITY OF RIVERSIDE

PUBLIC WORKS DEPARTMENT

INDUSTRUAL CUL-DE-SAC

STANDARD DRAWING NO. 103

Sheet 1 of 1