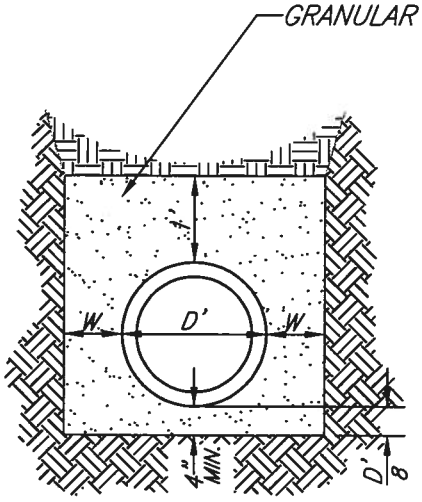

CASE I

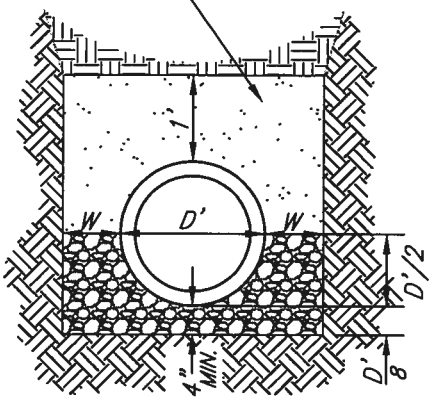

CASE II

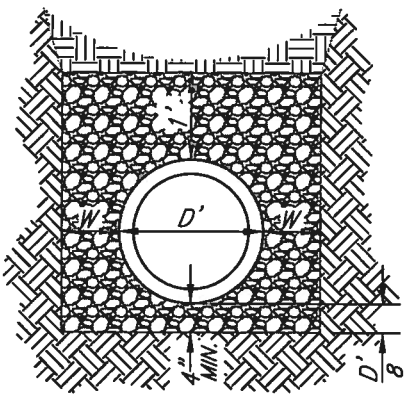

CASE III

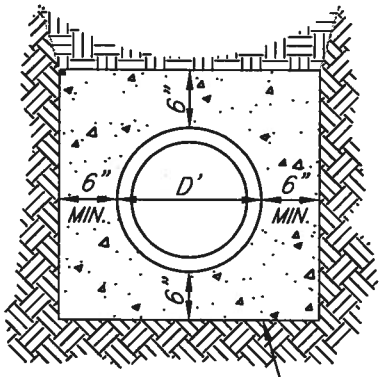

SUPPORT PIPE ON CONCRETE BLOCKS

CASE IV

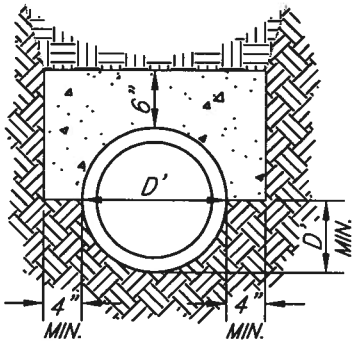

CASE V

(FOR EXISTING PIPE)

CASE	LOAD FACTOR
I	1.5
II	1.9
III	2.2
IV	4.5
V	2.6*

RIGID PIPE DESIGN DATA
*SEE NOTE 5

PIPE	COVER	W	
		MAX	MIN
VCP 12" & UNDER	> 8'	8"	6"
VCP 15" & OVER	> 8'	12"	6"
OTHERS	> 8'	10"	6"
ALL	< 8'	12"	6"

LEGEND

- PCC BEDDING
- GRANULAR MATERIAL
- 3/4" CRUSHED ROCK PER SECTION 200-1.2 OF THE STANDARD SPEC.
- BACKFILL
- NATIVE SOIL

APPROVED BY

CITY ENGINEER — DATE 5/18/11

MARK	REVISIONS	APPR.	DATE

CITY OF RIVERSIDE

PUBLIC WORKS DEPARTMENT

PIPE BEDDING

STANDARD DRAWING NO. 452

Sheet 1 of 2

NOTES FOR PIPE BEDDING

1. GRANULAR MATERIAL SHALL BE SAND, GRAVEL, DISINTEGRATED GRANITE, CRUSHED SLAG, CRUSHED AGGREGATE OR NATIVE SOIL WITH A SAND EQUIVALENT OF NOT LESS THAN 30. FOR ALL PLASTIC PIPE, EXCEPT ABS OR PVC COMPOSITE PIPE, BEDDING MATERIAL SHALL BE CRUSHED ROCK AS PER SECTION 200-1.2 OF THE STANDARD SPECIFICATIONS FOR 1/2-INCH ROCK.

2. WHERE GROUND WATER IS ENCOUNTERED IN THE TRENCH, THE CONTRACTOR SHALL, AT THE DIRECTION OF THE CITY ENGINEER, EXCAVATE TO A DEPTH OF 6-INCHES BELOW THE PROPOSED PIPE AND PLACE A BEDDING OF 3/4-INCH CRUSHED ROCK OR CRUSHED SLAG. IF THE GROUND WATER IS MORE THAN 3-INCHES ABOVE THE FLOW LINE OF PIPE, THE CONTRACTOR SHALL CONSTRUCT CONCRETE BARRIERS 3-FEET WIDE, IN 25-FOOT INTERVALS, UNDER THE PIPE TO PREVENT THE FLOW OF WATER THROUGH THE CRUSHED BEDDING MATERIAL.

3. CONCRETE SHALL CONFORM TO SECTION 201-1.1.2 OF THE LATEST EDITION OF STANDARD SPECIFICATIONS FOR PUBLIC WORKS CONSTRUCTION.

4. TRENCH WALLS SHALL BE VERTICAL WITHIN THE BEDDING AREA, UNLESS IMPROVED BEDDING, AS APPROVED BY THE CITY ENGINEER, IS USED.

5. THE LOAD FACTOR MAY BE INCREASED FOR CASE IV BY USE OF REINFORCING STEEL. THE LOAD FACTOR IS 3.2 FOR P=0.4%, 4.6 FOR P=1.0%, IN WHICH P IS THE RATIO OF THE AREA OF STEEL TO THE AREA OF CONCRETE ABOVE THE CROWN OF THE PIPE.

APPROVED BY

CITY ENGINEER — DATE 5/18/11

MARK	REVISIONS	APPR.	DATE

CITY OF RIVERSIDE

PUBLIC WORKS DEPARTMENT

PIPE BEDDING

STANDARD DRAWING NO. 452

Sheet 2 of 2