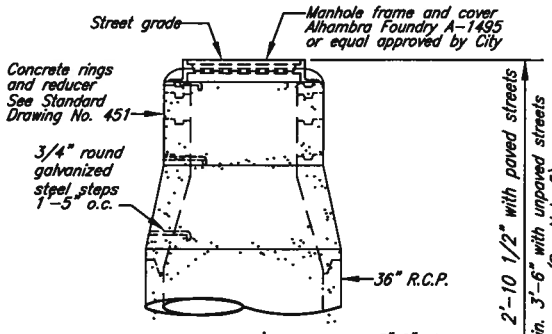


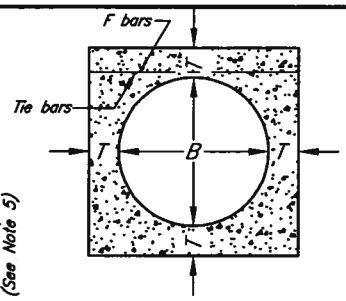


## SECTION G-G

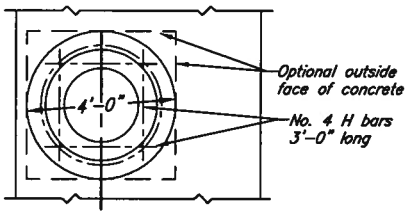


## PLAN VIEW

(Rings and Cover not shown)

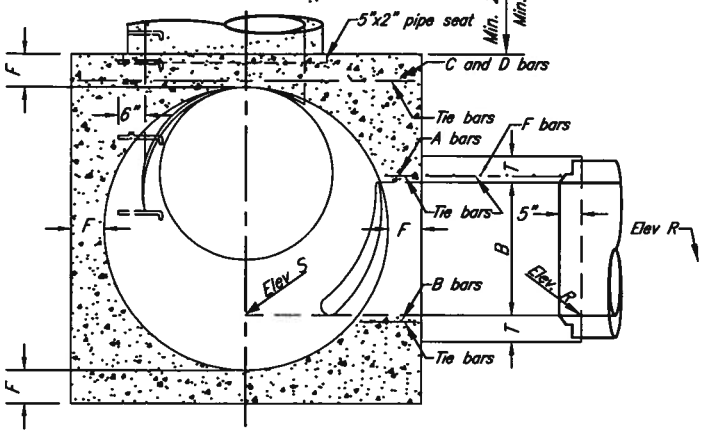


## SECTION N-M-P-O

(Projected on P-P-O)

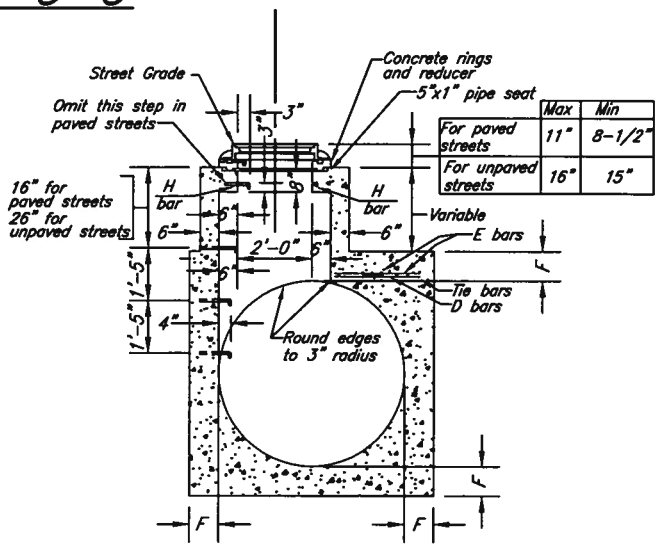


| | Max | Min |
|---|---|---|
| For paved streets | 11" | 8-1/2" |
| For unpaved streets | 16" | 15" |

## DETAIL M

(See Note 5)

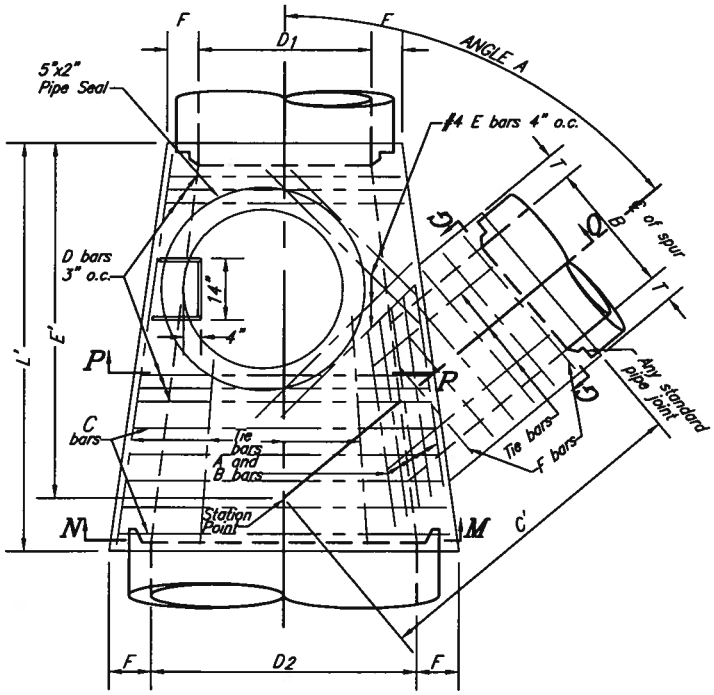


## PLAN VIEW

(Shaft not shown)

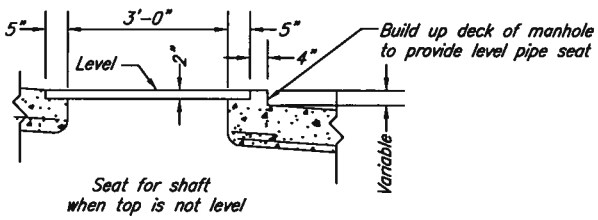


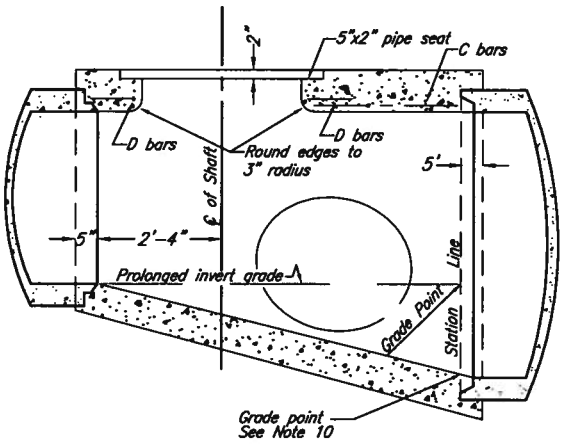


## LONGITUDINAL SECTION

APPROVED BY

CITY ENGINEER — DATE 5/18/11

| MARK | REVISIONS | APPR. | DATE |
|---|---|---|---|
| | | | |

# CITY OF RIVERSIDE

PUBLIC WORKS DEPARTMENT

MANHOLE JM

STANDARD DRAWING NO. 432

Sheet 1 of 3

# NOTES

1 – VALUES for A, B, C', $D_1$, $D_2$, E', L', Elevation R, and Elevation S are shown on the improvement plan (see Sheet 3 of 3). TABLE of values for F and T hereon.

2 – LATERALS: If lateral enter on both sides of manhole, access shaft shall be located on side receiving the smaller lateral. Laterals shall be designated on improvement plan as right or left, facing in the direction of stationing.

3 – CENTER OF MANHOLE SHAFT shall be located over center line of main storm drain when $D_1$ is 48" or less, in which case place 4 E bars symmetrically around shaft at 45° with center line.

4 – LENGTH L (shown on improvement plan) may be increased at option of Contractor to meet pipe ends, but any change in location of spur must be approved by the City Engineer.

5 – DETAIL M: When depth of manhole from street grade to top of box is less than 2'–10 1/2" for paved streets or 3'–6" for unpaved streets, construct monolithic shaft as per Detail M. The Contractor shall have the option of constructing shaft as per Detail M for any depth of manhole. When diameter $D_1$ is 48" or less center of shaft shall be located as per Note 3.

6 – REINFORCING STEEL shall be round, deformed, straight bars, 1–1/2" clear from face of concrete unless shown otherwise. Tie bars shall be No. 3 and spaced 18" on centers or closer. Steel schedule detailed on improvement plan.

7 – CONCRETE shall be in accordance with the table of Concrete Specifications.

8 – STEPS shall be 3/4" round, galvanized steel and anchored not less than 6 inches in the walls of structure. Unless otherwise shown the spacing shall be 1'–5" on centers. The lowest step shall be not more than 2 feet above the invert. (Alhambra Foundry A–3320, or equal approve by City.

9 – RINGS, REDUCER, AND PIPE for access shaft shall be seated in cement mortar and neatly pointed or wiped inside shaft.

10 – STATIONS of manholes shown on improvement plan apply at intersection of center lines of main line and spur. Elevations shown at stations refer to prolonged invert grade lines.

11 – FLOOR of manhole shall be steel troweled to springing line.

12 – BODY OF manhole, including spur, shall be poured in one continuous operation, except that the Contractor shall have the option of placing at the springing line a construction joint with longitudinal keyway.

13 – ELEVATION "S" applies at center of main line on prolongation of invert of spur.

**TABLE OF BAR SIZES**

| $D_2$ OR B | A & B BARS | C OR F BARS |
|---|---|---|
| 12" – 39" | NO. 5 AT 3" | NO. 4 AT 6" |
| 42" – 84" | NO. 6 AT 3" | NO. 5 AT 6" |
| 90" – 144" | NO. 7 AT 3" | NO. 6 AT 6" |

**TABLE OF VALUES FOR F AND T**

| $D_2$ | F | B | T |
|---|---|---|---|
| 12" | 4" | 12" | 4" |
| 15" | 4–1/4" | 15" | 4–1/4" |
| 18" | 4–1/2" | 18" | 4–1/2" |
| 21" | 5" | 21" | 5" |
| 24" | 5–1/4" | 24" | 5–1/4" |
| 27" | 5–1/2" | 27" | 5–1/2" |
| 30" | 6" | 30" | 6" |
| 33" | 6–1/4" | 33" | 6–1/4" |
| 36" | 6–1/2" | 36" | 6–1/2" |
| 39" | 7" | 39" | 7" |
| 42" | 7–1/2" | 42" | 7–1/2" |
| 45" | 7–3/4" | 45" | 7–3/4" |
| 48" | 8" | 48" | 8" |
| 51" | 8–1/2" | 51" | 8–1/2" |
| 54" | 9" | 54" | 9" |
| 57" | 9–1/4" | 57" | 9–1/4" |
| 60" | 9–1/2" | 60" | 9–1/2" |
| 63" | 10" | 63" | 10" |
| 66" | 10–1/4" | 66" | 10–1/4" |
| 69" | 10–3/4" | 69" | 10–3/4" |
| 72" | 11" | 72" | 11" |
| 78" | 11–3/4" | | |
| 84" | 12–1/2" | | |
| 90" | 13–1/4" | | |
| 96" | 14" | | |

**CONCRETE SPECS**

| T | CONCRETE CLASS |
|---|---|
| 4" – 7" | 560–C–3250 |
| 7 1/2" – 9 1/2" | 560–C–3250 |
| 10" – 14" | 560–B–3250 |

14 – COVER shall have letter D in center.

APPROVED BY

CITY ENGINEER — DATE 5/18/11

| MARK | REVISIONS | APPR. | DATE |
|---|---|---|---|
| | | | |

CITY OF RIVERSIDE

PUBLIC WORKS DEPARTMENT

MANHOLE JM

STANDARD DRAWING NO. 432

Sheet 2 of 3

## STORM DRAIN MAIN

| D/D2 | ANGLE VALUE | 30 | 40 | 50 | 60 | 70 | 80 |
|---|---|---|---|---|---|---|---|
| 12 | C | 2.2 | 1.8 | 1.6 | 1.5 | 1.4 | 1.3 |
| | E | 1.9 | 1.5 | 1.2 | 1.0 | 0.8 | 0.6 |
| 15 | C | 2.5 | 2.0 | 1.8 | 1.6 | 1.5 | 1.5 |
| | E | 2.2 | 1.7 | 1.3 | 1.1 | 0.9 | 0.7 |
| 18 | C | 2.8 | 2.3 | 2.0 | 1.8 | 1.7 | 1.6 |
| | E | 2.4 | 1.8 | 1.4 | 1.1 | 0.9 | 0.7 |
| 21 | C | 3.1 | 2.5 | 2.2 | 2.0 | 1.9 | 1.8 |
| | E | 2.7 | 2.0 | 1.6 | 1.2 | 1.0 | 0.7 |
| 24 | C | 3.4 | 2.7 | 2.4 | 2.2 | 2.0 | 2.0 |
| | E | 3.0 | 2.2 | 1.7 | 1.3 | 1.0 | 0.8 |
| 27 | C | 3.7 | 3.0 | 2.6 | 2.3 | 2.2 | 2.1 |
| | E | 3.2 | 2.4 | 1.8 | 1.4 | 1.1 | 0.8 |
| 30 | C | 4.0 | 3.2 | 2.8 | 2.5 | 2.4 | 2.3 |
| | E | 3.5 | 2.6 | 2.0 | 1.5 | 1.1 | 0.8 |
| 33 | C | 4.3 | 3.4 | 3.0 | 2.7 | 2.5 | 2.4 |
| | E | 3.8 | 2.8 | 2.1 | 1.6 | 1.2 | 0.8 |
| 36 | C | 4.6 | 3.7 | 3.2 | 2.9 | 2.7 | 2.6 |
| | E | 4.0 | 2.9 | 2.2 | 1.7 | 1.2 | 0.9 |
| 39 | C | 4.9 | 3.9 | 3.4 | 3.0 | 2.9 | 2.7 |
| | E | 4.3 | 3.1 | 2.4 | 1.8 | 1.3 | 0.9 |
| 42 | C | 5.3 | 4.2 | 3.6 | 3.2 | 3.0 | 2.9 |
| | E | 4.6 | 3.3 | 2.5 | 1.9 | 1.4 | 0.9 |
| 45 | C | 5.5 | 4.4 | 3.8 | 3.4 | 3.2 | 3.1 |
| | E | 4.9 | 3.5 | 2.6 | 2.0 | 1.4 | 0.9 |
| 48 | C | 5.8 | 4.6 | 4.0 | 3.6 | 3.3 | 3.2 |
| | E | 5.1 | 3.7 | 2.7 | 2.0 | 1.5 | 1.0 |
| 51 | C | 6.2 | 4.9 | 4.2 | 3.8 | 3.5 | 3.4 |
| | E | 5.4 | 3.9 | 2.9 | 2.1 | 1.5 | 1.0 |
| 54 | C | 6.5 | 5.2 | 4.4 | 4.0 | 3.7 | 3.5 |
| | E | 5.7 | 4.1 | 3.0 | 2.2 | 1.6 | 1.0 |
| 57 | C | 6.8 | 5.4 | 4.6 | 4.1 | 3.8 | 3.7 |
| | E | 5.9 | 4.2 | 3.1 | 2.3 | 1.6 | 1.1 |
| 60 | C | 7.1 | 5.6 | 4.8 | 4.3 | 4.0 | 3.8 |
| | E | 6.2 | 4.4 | 3.3 | 2.4 | 1.7 | 1.1 |
| 63 | C | 7.4 | 5.9 | 5.0 | 4.5 | 4.2 | 4.0 |
| | E | 6.5 | 4.6 | 3.4 | 2.5 | 1.8 | 1.1 |
| 66 | C | 7.7 | 6.1 | 5.2 | 4.7 | 4.3 | 4.2 |
| | E | 6.7 | 4.8 | 3.5 | 2.6 | 1.8 | 1.1 |
| 69 | C | 8.0 | 6.4 | 5.4 | 4.9 | 4.5 | 4.3 |
| | E | 7.0 | 5.0 | 3.7 | 2.7 | 1.9 | 1.2 |
| 72 | C | 8.3 | 6.6 | 5.6 | 5.0 | 4.7 | 4.5 |
| | E | 7.3 | 5.2 | 3.8 | 2.8 | 1.9 | 1.2 |
| 75 | C | 8.6 | 6.8 | 5.8 | 5.2 | 4.8 | 4.6 |
| | E | 7.5 | 5.3 | 3.9 | 2.8 | 2.0 | 1.2 |
| 78 | C | 9.0 | 7.1 | 6.0 | 5.4 | 5.0 | 4.8 |
| | E | 7.8 | 5.5 | 4.0 | 2.9 | 2.0 | 1.2 |
| 81 | C | 9.3 | 7.3 | 6.2 | 5.6 | 5.2 | 4.9 |
| | E | 8.1 | 5.7 | 4.2 | 3.0 | 2.1 | 1.3 |
| 84 | C | 9.6 | 7.6 | 6.4 | 5.7 | 5.3 | 5.1 |
| | E | 8.4 | 5.9 | 4.3 | 3.1 | 2.2 | 1.3 |
| 87 | C | 9.9 | 7.8 | 6.6 | 5.9 | 5.5 | 5.3 |
| | E | 8.6 | 6.1 | 4.4 | 3.2 | 2.2 | 1.3 |
| 90 | C | 10.2 | 8.1 | 6.8 | 6.1 | 5.7 | 5.4 |
| | E | 8.9 | 6.3 | 4.6 | 3.3 | 2.3 | 1.4 |
| 93 | C | 10.5 | 8.3 | 7.0 | 6.3 | 5.8 | 5.6 |
| | E | 9.2 | 6.5 | 4.7 | 3.4 | 2.3 | 1.4 |
| 96 | C | 10.8 | 8.5 | 7.2 | 6.5 | 6.0 | 5.7 |
| | E | 9.4 | 6.7 | 4.8 | 3.5 | 2.4 | 1.4 |

## STORM DRAIN LATERAL

| B | ANGLE VALUE | 30 | 40 | 50 | 60 | 70 | 80 |
|---|---|---|---|---|---|---|---|
| 12 | C | 1.9 | 1.5 | 1.2 | 1.0 | 0.8 | 0.6 |
| | E | 2.2 | 1.8 | 1.6 | 1.5 | 1.4 | 1.3 |
| 15 | C | 2.2 | 1.7 | 1.3 | 1.1 | 0.9 | 0.7 |
| | E | 2.5 | 2.0 | 1.8 | 1.6 | 1.5 | 1.5 |
| 18 | C | 2.4 | 1.8 | 1.4 | 1.1 | 0.9 | 0.7 |
| | E | 2.8 | 2.3 | 2.0 | 1.8 | 1.7 | 1.6 |
| 21 | C | 2.7 | 2.0 | 1.6 | 1.2 | 1.0 | 0.7 |
| | E | 3.1 | 2.5 | 2.2 | 2.0 | 1.9 | 1.8 |
| 24 | C | 3.0 | 2.2 | 1.7 | 1.3 | 1.0 | 0.8 |
| | E | 3.4 | 2.7 | 2.4 | 2.2 | 2.0 | 2.0 |
| 27 | C | 3.2 | 2.4 | 1.8 | 1.4 | 1.1 | 0.8 |
| | E | 3.7 | 3.0 | 2.6 | 2.3 | 2.2 | 2.1 |
| 30 | C | 3.5 | 2.6 | 2.0 | 1.5 | 1.1 | 0.8 |
| | E | 4.0 | 3.2 | 2.8 | 2.5 | 2.4 | 2.3 |
| 33 | C | 3.8 | 2.8 | 2.1 | 1.6 | 1.2 | 0.8 |
| | E | 4.3 | 3.4 | 3.0 | 2.7 | 2.5 | 2.4 |
| 36 | C | 4.0 | 2.9 | 2.2 | 1.7 | 1.2 | 0.9 |
| | E | 4.6 | 3.7 | 3.2 | 2.9 | 2.7 | 2.6 |
| 39 | C | 4.3 | 3.1 | 2.4 | 1.8 | 1.3 | 0.9 |
| | E | 4.9 | 3.9 | 3.4 | 3.0 | 2.9 | 2.7 |
| 42 | C | 4.6 | 3.3 | 2.5 | 1.9 | 1.4 | 0.9 |
| | E | 5.3 | 4.2 | 3.6 | 3.2 | 3.0 | 2.9 |
| 45 | C | 4.9 | 3.5 | 2.6 | 2.0 | 1.4 | 0.9 |
| | E | 5.5 | 4.4 | 3.8 | 3.4 | 3.2 | 3.1 |
| 48 | C | 5.1 | 3.7 | 2.7 | 2.0 | 1.5 | 1.0 |
| | E | 5.8 | 4.6 | 4.0 | 3.6 | 3.3 | 3.2 |
| 51 | C | 5.4 | 3.9 | 2.9 | 2.1 | 1.5 | 1.0 |
| | E | 6.2 | 4.9 | 4.2 | 3.8 | 3.5 | 3.4 |
| 54 | C | 5.7 | 4.1 | 3.0 | 2.2 | 1.6 | 1.0 |
| | E | 6.5 | 5.2 | 4.4 | 4.0 | 3.7 | 3.5 |
| 57 | C | 5.9 | 4.2 | 3.1 | 2.3 | 1.6 | 1.1 |
| | E | 6.8 | 5.4 | 4.6 | 4.1 | 3.8 | 3.7 |
| 60 | C | 6.2 | 4.4 | 3.3 | 2.4 | 1.7 | 1.1 |
| | E | 7.1 | 5.6 | 4.8 | 4.3 | 4.0 | 3.8 |
| 63 | C | 6.5 | 4.6 | 3.4 | 2.5 | 1.8 | 1.1 |
| | E | 7.4 | 5.9 | 5.0 | 4.5 | 4.2 | 4.0 |
| 66 | C | 6.7 | 4.8 | 3.5 | 2.6 | 1.8 | 1.1 |
| | E | 7.7 | 6.1 | 5.2 | 4.7 | 4.3 | 4.2 |
| 69 | C | 7.0 | 5.0 | 3.7 | 2.7 | 1.9 | 1.2 |
| | E | 8.0 | 6.4 | 5.4 | 4.9 | 4.5 | 4.3 |
| 72 | C | 7.3 | 5.2 | 3.8 | 2.8 | 1.9 | 1.2 |
| | E | 8.3 | 6.6 | 5.6 | 5.0 | 4.7 | 4.5 |
| 75 | C | 7.5 | 5.3 | 3.9 | 2.8 | 2.0 | 1.2 |
| | E | 8.6 | 6.8 | 5.8 | 5.2 | 4.8 | 4.6 |
| 78 | C | 7.8 | 5.5 | 4.0 | 2.9 | 2.0 | 1.2 |
| | E | 9.0 | 7.1 | 6.0 | 5.4 | 5.0 | 4.8 |
| 81 | C | 8.1 | 5.7 | 4.2 | 3.0 | 2.1 | 1.3 |
| | E | 9.3 | 7.3 | 6.2 | 5.6 | 5.2 | 4.9 |
| 84 | C | 8.4 | 5.9 | 4.3 | 3.1 | 2.2 | 1.3 |
| | E | 9.6 | 7.6 | 6.4 | 5.7 | 5.3 | 5.1 |
| 87 | C | 8.6 | 6.1 | 4.4 | 3.2 | 2.2 | 1.3 |
| | E | 9.9 | 7.8 | 6.6 | 5.9 | 5.5 | 5.3 |

EXAMPLE:

Given:

$D_2 = 60''$

$B = 39''$

$A = 50°$

Find: $C'$, $E'$, $L'$

Solution:

1. Enter Storm Drain Main Table with the given $D_2$ & A:

   $C_M = 4.8ft.$ $E_M = 3.3ft.$

2. Enter Storm Drain Lateral Table with given B & A:

   $C_L = 2.4ft.$ $E_L = 3.4ft.$

3. $C' = C_M + C_L$

   $C' = 4.8\ ft. + 2.4\ ft. = 7.2\ ft.$

4. $E' = E_M + E_L$

   $E' = 3.3\ ft. + 3.4\ ft. = 6.7\ ft.$

5. $L' = E' + 1\ ft. =$

   $6.7\ ft. + 1\ ft. = 7.7\ ft.$

APPROVED BY

CITY ENGINEER

5/18/11

DATE

| MARK | REVISIONS | APPR. | DATE |
|---|---|---|---|
| | | | |

# CITY OF RIVERSIDE

PUBLIC WORKS DEPARTMENT

MANHOLE JM

STANDARD DRAWING NO. 432

Sheet 3 of 3