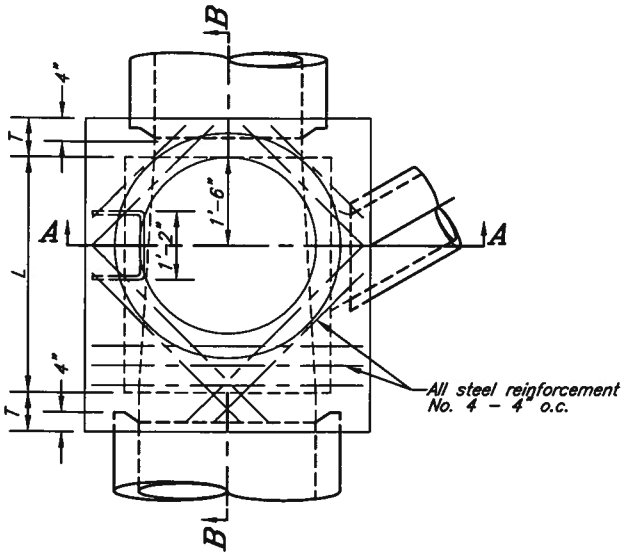

PLAN VIEW
(Shaft not shown)

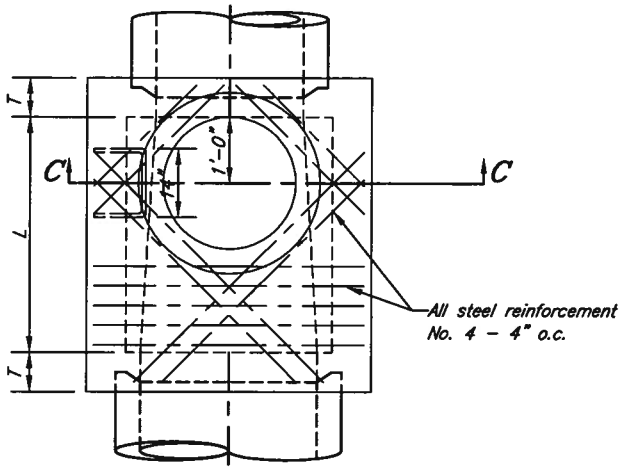

DETAIL N
PLAN VIEW
(Shaft not shown)
See Note M

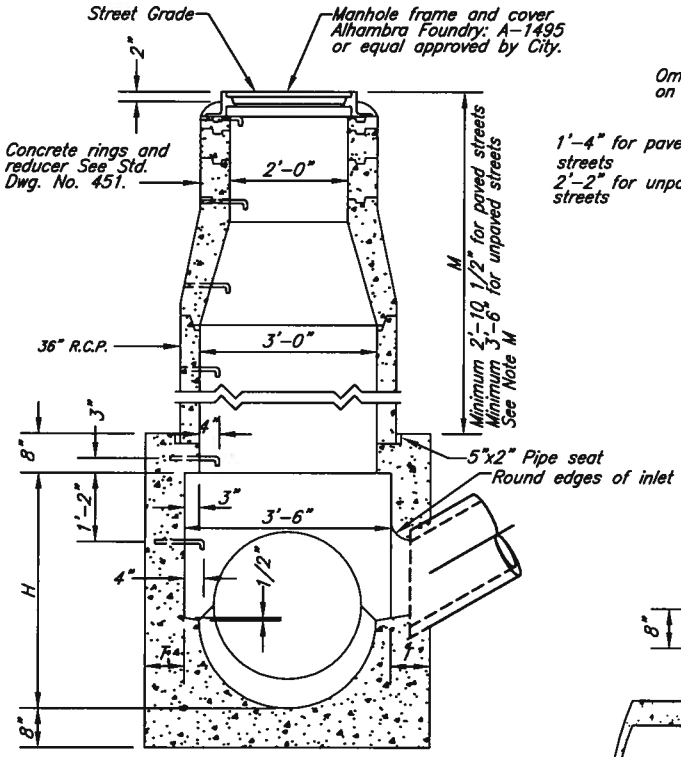

SECTION A-A

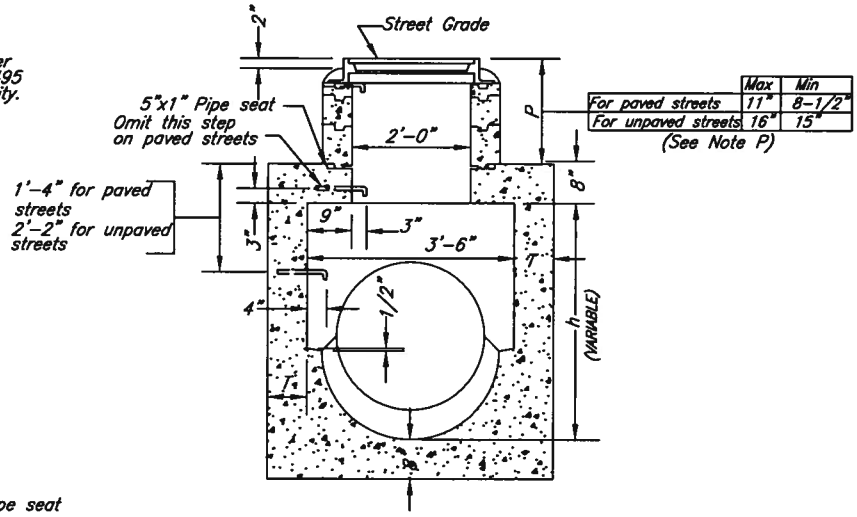

	Max	Min
For paved streets	11"	8-1/2"
For unpaved streets	16"	15"

(See Note P)

SECTION C-C

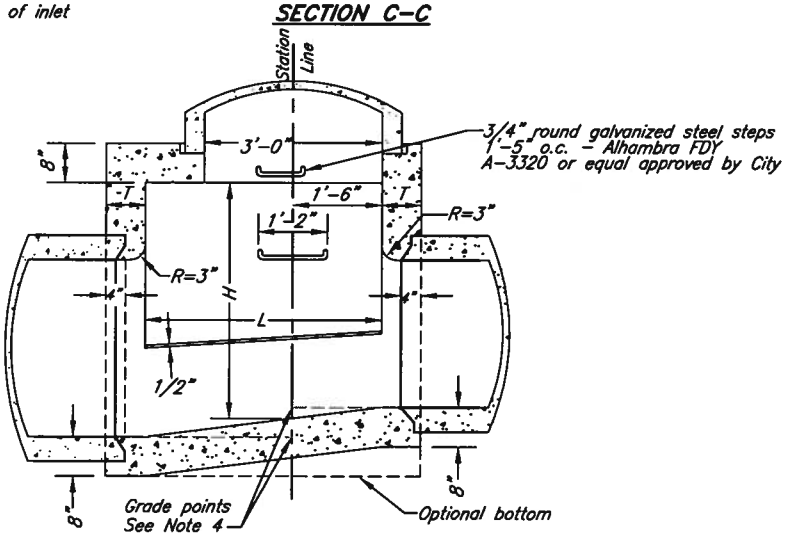

SECTION B-B

APPROVED BY

CITY ENGINEER — DATE 5/18/11

MARK	REVISIONS	APPR.	DATE

CITY OF RIVERSIDE

PUBLIC WORKS DEPARTMENT

MANHOLE EZ

STANDARD DRAWING NO. 431

Sheet 1 of 2

NOTES

H–HEIGHT H (in Section A–A and Section B–B) shall be not less than 4'–0", but may be increased at option of Contractor, provided that the value of M shall be not less that the minimum specified and that the reducer shall be used. For h in Section C–C) see Note P.

L–LENGTH L shall be 4' unless otherwise shown on improvement plan. L may be increased or location of manhole shifted to meet pipe ends, at the option of Contractor, except that any change in location of manhole must be approved by the City Engineer.

M–SHAFT shall be constructed as per Secton C–C and Detail N when depth M from street grade to top of box is less than 2'–10 1/2" for paved streets or 3'–6" for unpaved streets.

P–DEPTH P may be reduced to an absolute limit of 6 inches when larger values of P would reduce h (in Section C–C) to 3'–6" or less.

T – T shall be 8" for values of H up to and including 8 ft.
T shall be 10" for values of H over 8 feet.

1 – Steps shall be 3/4" round, galvanized steel and anchored not less than 6" in the walls of structure. Unless otherwise shown, steps shall be space 1'–5" on centers. The lowest step shall be not more than 2 ft above the ledge at side of manhole floor. (Alhambra Fdy A–3320 or equal approved by City.)

2 – CONCRETE shall be 560–C–3250.

3 – REINFORCING STEEL shall be No. 4 deformed, straight bars 1–1/2" clear from face of concrete.

4 – STATIONS of manholes shown on improvement plan apply at center line of shaft. Elevations are shown at shaft center and refer to the prolonged invert grade line. See Note L for shifting location.

5 – FLOOR of manhole shall be steel–troweled.

6 – RINGS, reducer, and pipe for access shaft shall be seated in cement mortar and neatly pointed or wiped inside shaft.

7 – COVER shall have letter D in center.

(Adapted from City of Los Angeles Std. Plan No. B–1532)

APPROVED BY

CITY ENGINEER — DATE 5/18/11

MARK	REVISIONS	APPR.	DATE

CITY OF RIVERSIDE
PUBLIC WORKS DEPARTMENT

MANHOLE EZ

STANDARD DRAWING NO. 431

Sheet 2 of 2