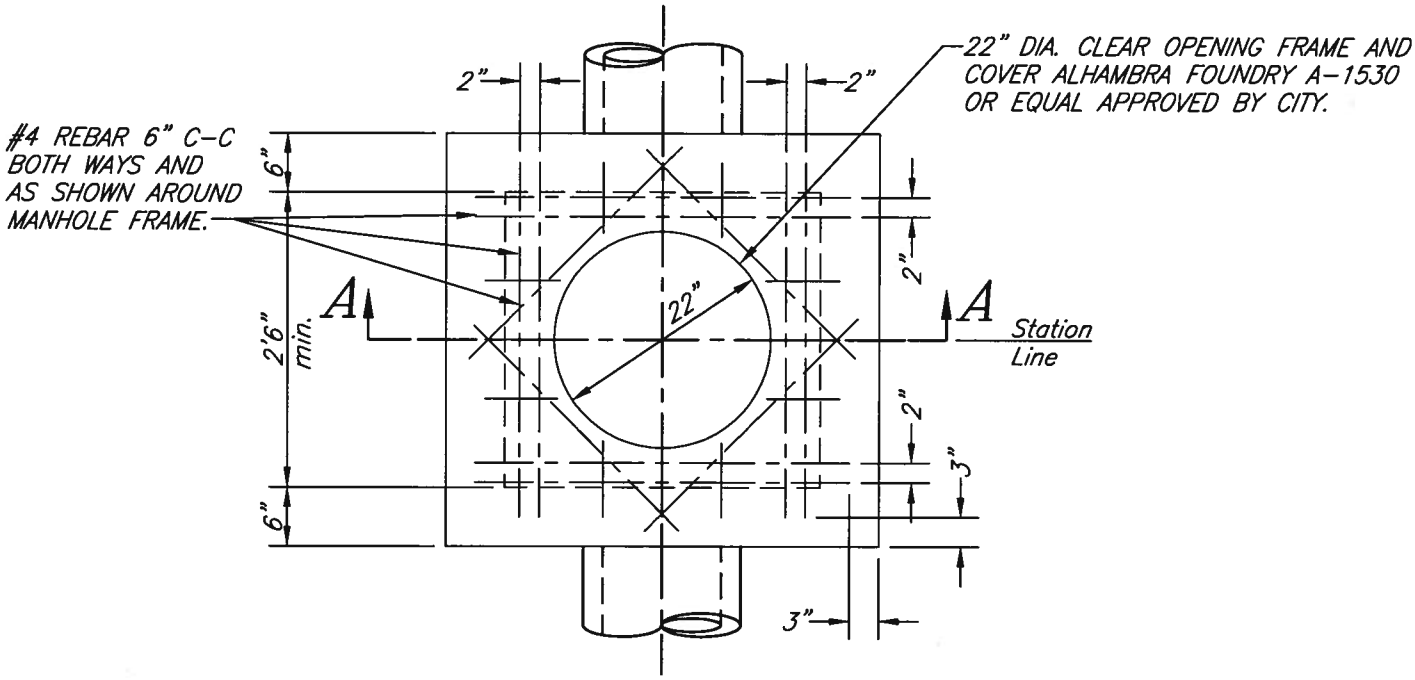

PLAN VIEW

NOTES:

1. Class 560-C-3250 Concrete to be used.
2. Pipe size and inlet and outlet flow line elevations to be shown on improvement plan.
3. When pipe sizes greater than 18" are used a larger frame and cover may be required by the City Engineer.
4. V is a maximum of 4'. For depths greater than 4' or for a vehicular traffic situation use Std. Dwgs. 430 or 431.
5. Bike proof grating shall be used instead of solid cover when shown on plans.

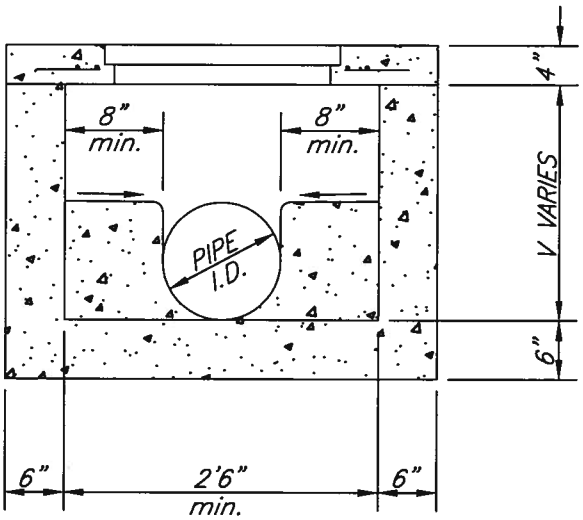

SECTION A-A

APPROVED BY

CITY ENGINEER

DATE 5/18/11

MARK	REVISIONS	APPR.	DATE

CITY OF RIVERSIDE

PUBLIC WORKS DEPARTMENT

CLEANOUT BOX

STANDARD DRAWING NO. 425

Sheet 1 of 1