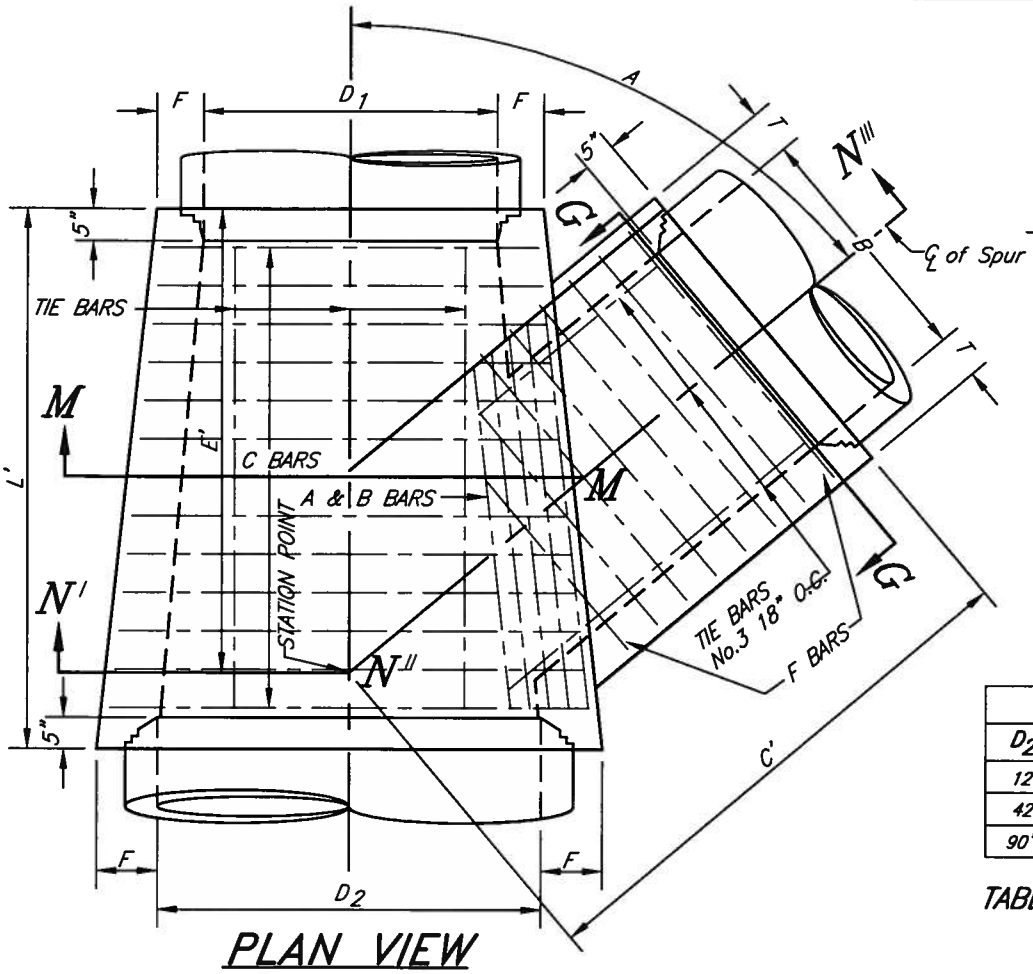

PLAN VIEW

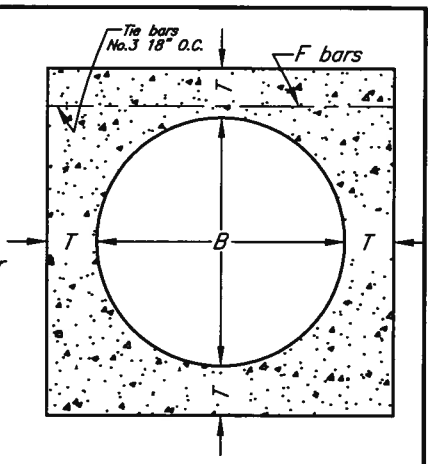

SECTION G–G

CONCRETE SPECS	
T	CONCRETE CLASS
4" – 9–1/2"	560–C–3250
10" – 11"	560–B–3250

TABLE OF BAR SIZES		
D_2 OR B	A & B BARS	C OR F BARS
12" – 39"	NO. 5 AT 3"	NO. 4 AT 6"
42" – 84"	NO. 6 AT 3"	NO. 5 AT 6"
90" – 144"	NO. 7 AT 3"	NO. 6 AT 6"

TABLE OF VALUES FOR F AND T

D_2	F
12"	4"
15"	4–1/4"
18"	4–1/2"
21"	5"
24"	5–1/4"
27"	5–1/2"
30"	6"
33"	6–1/4"
36"	6–1/2"
39"	7"
42"	7–1/2"
45"	7–3/4"
48"	8"
51"	8–1/2"
54"	9"
57"	9–1/4"
60"	9–1/2"
63"	10"
66"	10–1/4"
69"	10–3/4"
72"	11"
78"	11–3/4"
84"	12–1/2"
90"	13–1/4"
96"	14"

B	T
12"	4"
15"	4–1/4"
18"	4–1/2"
21"	5"
24"	5–1/4"
27"	5–1/2"
30"	6"
33"	6–1/4"
36"	6–1/2"
39"	7"
42"	7–1/2"
45"	7–3/4"
48"	8"
51"	8–1/2"
54"	9"
57"	9–1/4"
60"	9–1/2"
63"	10"
66"	10–1/4"
69"	10–3/4"
72"	11"

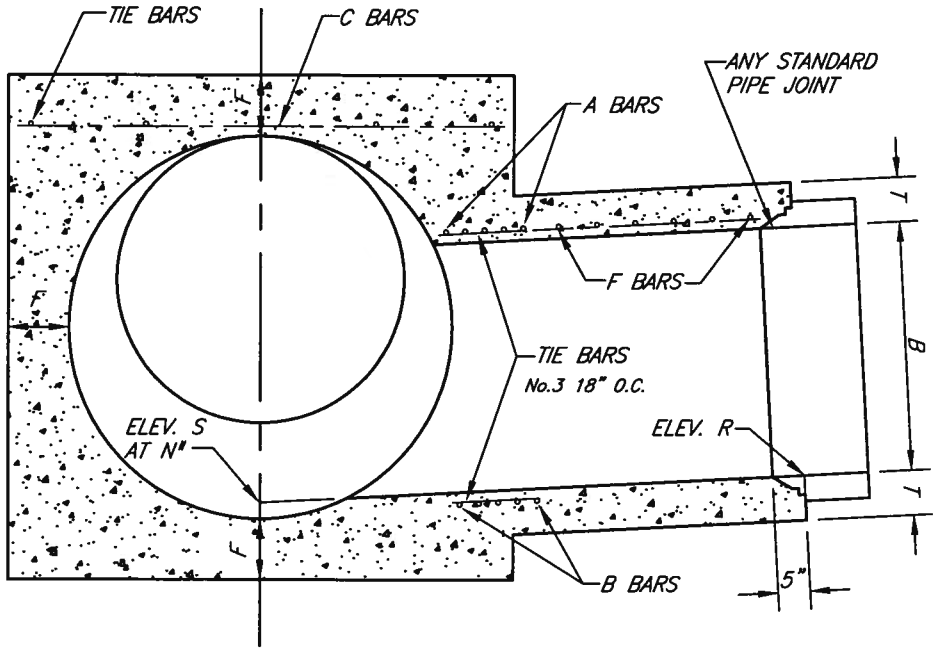

SECTION N' –N'' –N'''
Projected on M–M–N'''

APPROVED BY
CITY ENGINEER
DATE 5/18/11

MARK	REVISIONS	APPR.	DATE

CITY OF RIVERSIDE
PUBLIC WORKS DEPARTMENT

JUNCTION STRUCTURE C

STANDARD DRAWING NO. 422
Sheet 1 of 3

NOTES:

1. VALUES for A, B, C', D1, D2, E', L', Elevation R, and Elevation S are shown on Improvement Plan (see sheet 3 of 3). TABLE of values for F and T shown on this Standard Drawing, Sheet 1.

2. OPTIONAL CONSTRUCTION: When Junction Structure B is specified on improvement plan, the Contractor shall have the option of constructing Junction Structure C, in which case construction data will be furnished by the City Engineer.

3. CONCRETE shall be in accordance with the table on Sheet 1.

4. FLOOR of structure shall be steel-troweled to springing line.

5. REINFORCING STEEL shall be round, deformed, straight bars, 1-1/2" clear from face of concrete unless otherwise shown.

   Tie bars shall be No. 3 and spaced 18" on centers or closer.

   A and B bars need not be longer than the outside diagonal width of the lateral spur.

6. STEEL SCHEDULE detailed on improvement plan.

7. ELEVATION S applies at center of main line on prolongation of invert of spur.

8. JUNCTION STRUCTURE shall be poured in one continuous operation, except that the Contractor shall have the option of placing at the springing line a construction joint with a longitudinal keyway.

9. LENGTH L (shown on improvement plan) may be increased at the option of the Contractor to meet pipe ends, using C bars in extended portion of same diameter and spacing as specified on improvement plan, but any change in location of SPUR must be approved by the City Engineer.

10. STATIONS of manholes shown on improvement plan apply at intersection of main line and spur. Elevations shown at this point refer to prolonged invert grade lines, except that when intersection of center lines falls outside of structure, the elevations are shown and apply at extreme lower end of the structure.

11. LATERALS- Where laterals enter on both sides of structure, they shall be designated on the improvement plan as right or left, facing in the direction of stationing.

(Adapted from the City of Los Angeles Std. Plan No. B-1832)

APPROVED BY

CITY ENGINEER — DATE 5/18/11

MARK	REVISIONS	APPR.	DATE

CITY OF RIVERSIDE

PUBLIC WORKS DEPARTMENT

JUNCTION STRUCTURE C

STANDARD DRAWING NO. 422

Sheet 2 of 3

STORM DRAIN MAIN

D/D2	ANGLE / VALUE	30	40	50	60	70	80
12	C	2.2	1.8	1.6	1.5	1.4	1.3
	E	1.9	1.5	1.2	1.0	0.8	0.6
15	C	2.5	2.0	1.8	1.6	1.5	1.5
	E	2.2	1.7	1.3	1.1	0.9	0.7
18	C	2.8	2.3	2.0	1.8	1.7	1.6
	E	2.4	1.8	1.4	1.1	0.9	0.7
21	C	3.1	2.5	2.2	2.0	1.9	1.8
	E	2.7	2.0	1.6	1.2	1.0	0.7
24	C	3.4	2.7	2.4	2.2	2.0	2.0
	E	3.0	2.2	1.7	1.3	1.0	0.8
27	C	3.7	3.0	2.6	2.3	2.2	2.1
	E	3.2	2.4	1.8	1.4	1.1	0.8
30	C	4.0	3.2	2.8	2.5	2.4	2.3
	E	3.5	2.6	2.0	1.5	1.1	0.8
33	C	4.3	3.4	3.0	2.7	2.5	2.4
	E	3.8	2.8	2.1	1.6	1.2	0.8
36	C	4.6	3.7	3.2	2.9	2.7	2.6
	E	4.0	2.9	2.2	1.7	1.2	0.9
39	C	4.9	3.9	3.4	3.0	2.9	2.7
	E	4.3	3.1	2.4	1.8	1.3	0.9
42	C	5.3	4.2	3.6	3.2	3.0	2.9
	E	4.6	3.3	2.5	1.9	1.4	0.9
45	C	5.5	4.4	3.8	3.4	3.2	3.1
	E	4.9	3.5	2.6	2.0	1.4	0.9
48	C	5.8	4.6	4.0	3.6	3.3	3.2
	E	5.1	3.7	2.7	2.0	1.5	1.0
51	C	6.2	4.9	4.2	3.8	3.5	3.4
	E	5.4	3.9	2.9	2.1	1.5	1.0
54	C	6.5	5.2	4.4	4.0	3.7	3.5
	E	5.7	4.1	3.0	2.2	1.6	1.0
57	C	6.8	5.4	4.6	4.1	3.8	3.7
	E	5.9	4.2	3.1	2.3	1.6	1.1
60	C	7.1	5.6	4.8	4.3	4.0	3.8
	E	6.2	4.4	3.3	2.4	1.7	1.1
63	C	7.4	5.9	5.0	4.5	4.2	4.0
	E	6.5	4.6	3.4	2.5	1.8	1.1
66	C	7.7	6.1	5.2	4.7	4.3	4.2
	E	6.7	4.8	3.5	2.6	1.8	1.1
69	C	8.0	6.4	5.4	4.9	4.5	4.3
	E	7.0	5.0	3.7	2.7	1.9	1.2
72	C	8.3	6.6	5.6	5.0	4.7	4.5
	E	7.3	5.2	3.8	2.8	1.9	1.2
75	C	8.6	6.8	5.8	5.2	4.8	4.6
	E	7.5	5.3	3.9	2.8	2.0	1.2
78	C	9.0	7.1	6.0	5.4	5.0	4.8
	E	7.8	5.5	4.0	2.9	2.0	1.2
81	C	9.3	7.3	6.2	5.6	5.2	4.9
	E	8.1	5.7	4.2	3.0	2.1	1.3
84	C	9.6	7.6	6.4	5.7	5.3	5.1
	E	8.4	5.9	4.3	3.1	2.2	1.3
87	C	9.9	7.8	6.6	5.9	5.5	5.3
	E	8.6	6.1	4.4	3.2	2.2	1.3
90	C	10.2	8.1	6.8	6.1	5.7	5.4
	E	8.9	6.3	4.6	3.3	2.3	1.4
93	C	10.5	8.3	7.0	6.3	5.8	5.6
	E	9.2	6.5	4.7	3.4	2.3	1.4
96	C	10.8	8.5	7.2	6.5	6.0	5.7
	E	9.4	6.7	4.8	3.5	2.4	1.4

STORM DRAIN LATERAL

B	ANGLE / VALUE	30	40	50	60	70	80
12	C	1.9	1.5	1.2	1.0	0.8	0.6
	E	2.2	1.8	1.6	1.5	1.4	1.3
15	C	2.2	1.7	1.3	1.1	0.9	0.7
	E	2.5	2.0	1.8	1.6	1.5	1.5
18	C	2.4	1.8	1.4	1.1	0.9	0.7
	E	2.8	2.3	2.0	1.8	1.7	1.6
21	C	2.7	2.0	1.6	1.2	1.0	0.7
	E	3.1	2.5	2.2	2.0	1.9	1.8
24	C	3.0	2.2	1.7	1.3	1.0	0.8
	E	3.4	2.7	2.4	2.2	2.0	2.0
27	C	3.2	2.4	1.8	1.4	1.1	0.8
	E	3.7	3.0	2.6	2.3	2.2	2.1
30	C	3.5	2.6	2.0	1.5	1.1	0.8
	E	4.0	3.2	2.8	2.5	2.4	2.3
33	C	3.8	2.8	2.1	1.6	1.2	0.8
	E	4.3	3.4	3.0	2.7	2.5	2.4
36	C	4.0	2.9	2.2	1.7	1.2	0.9
	E	4.6	3.7	3.2	2.9	2.7	2.6
39	C	4.3	3.1	2.4	1.8	1.3	0.9
	E	4.9	3.9	3.4	3.0	2.9	2.7
42	C	4.6	3.3	2.5	1.9	1.4	0.9
	E	5.3	4.2	3.6	3.2	3.0	2.9
45	C	4.9	3.5	2.6	2.0	1.4	0.9
	E	5.5	4.4	3.8	3.4	3.2	3.1
48	C	5.1	3.7	2.7	2.0	1.5	1.0
	E	5.8	4.6	4.0	3.6	3.3	3.2
51	C	5.4	3.9	2.9	2.1	1.5	1.0
	E	6.2	4.9	4.2	3.8	3.5	3.4
54	C	5.7	4.1	3.0	2.2	1.6	1.0
	E	6.5	5.2	4.4	4.0	3.7	3.5
57	C	5.9	4.2	3.1	2.3	1.6	1.1
	E	6.8	5.4	4.6	4.1	3.8	3.7
60	C	6.2	4.4	3.3	2.4	1.7	1.1
	E	7.1	5.6	4.8	4.3	4.0	3.8
63	C	6.5	4.6	3.4	2.5	1.8	1.1
	E	7.4	5.9	5.0	4.5	4.2	4.0
66	C	6.7	4.8	3.5	2.6	1.8	1.1
	E	7.7	6.1	5.2	4.7	4.3	4.2
69	C	7.0	5.0	3.7	2.7	1.9	1.2
	E	8.0	6.4	5.4	4.9	4.5	4.3
72	C	7.3	5.2	3.8	2.8	1.9	1.2
	E	8.3	6.6	5.6	5.0	4.7	4.5
75	C	7.5	5.3	3.9	2.8	2.0	1.2
	E	8.6	6.8	5.8	5.2	4.8	4.6
78	C	7.8	5.5	4.0	2.9	2.0	1.2
	E	9.0	7.1	6.0	5.4	5.0	4.8
81	C	8.1	5.7	4.2	3.0	2.1	1.3
	E	9.3	7.3	6.2	5.6	5.2	4.9
84	C	8.4	5.9	4.3	3.1	2.2	1.3
	E	9.6	7.6	6.4	5.7	5.3	5.1
87	C	8.6	6.1	4.4	3.2	2.2	1.3
	E	9.9	7.8	6.6	5.9	5.5	5.3

EXAMPLE:

Given:

$D_2 = 60''$ $A = 50°$

$B = 39''$

Find: C', E', & L'

Solution:

1. Enter Storm Drain Main Table with the given D_2 & A:

   $C_M = 4.8ft$ $E_M = 3.3ft$

2. Enter Storm Drain Lateral Table with the given B & A:

   $C_L = 2.4ft$ $E_L = 3.4ft$

3. $C' = C_M + C_L$
   $C' = 4.8$ ft. $+ 2.4$ ft. $= 7.2$ ft.

4. $E' = E_M + E_L$
   $E' = 3.3$ ft. $+ 3.4$ ft. $= 6.7$ ft.

5. $L' = E' + 1$ ft. $=$
   6.7 ft. $+ 1$ ft. $= 7.7$ ft.

APPROVED BY

CITY ENGINEER

5/18/11

DATE

MARK	REVISIONS	APPR.	DATE

CITY OF RIVERSIDE

PUBLIC WORKS DEPARTMENT

JUNCTION STRUCTURE C

STANDARD DRAWING NO. 422

Sheet 3 of 3