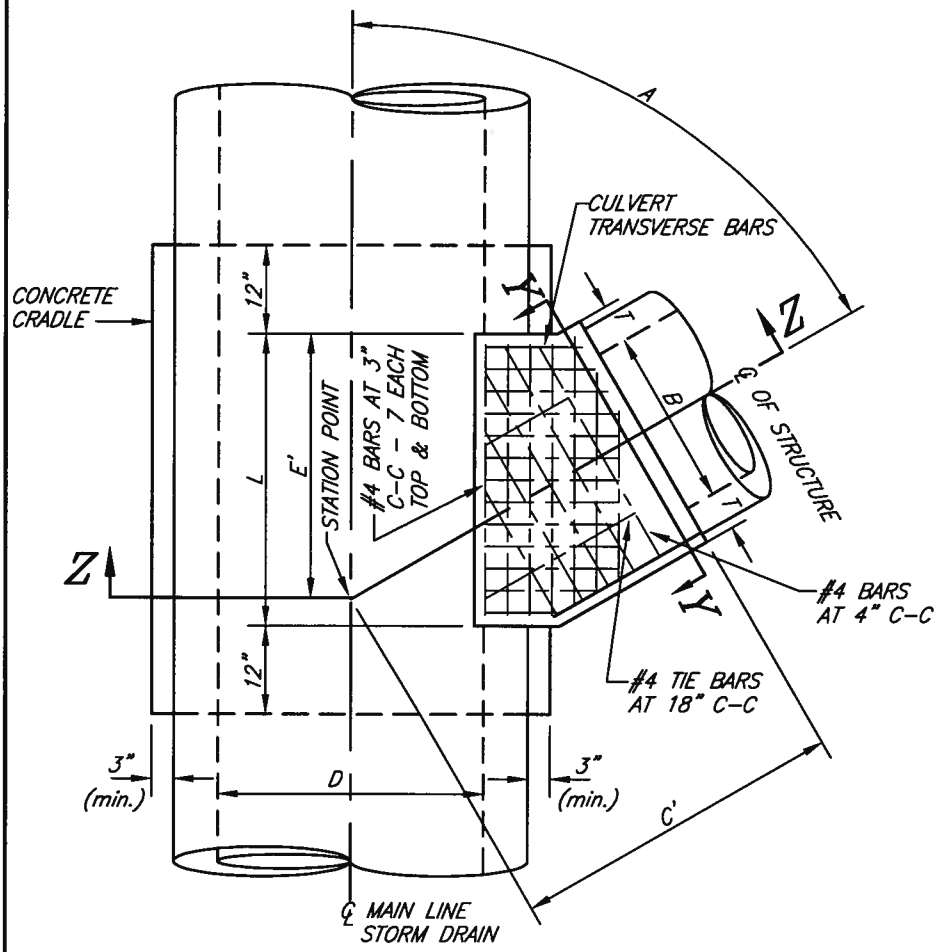

PLAN VIEW

TABLE OF VALUES FOR T	
B	T
12"	4"
15"	4-1/4"
18"	4-1/2"
21"	5"
24"	5-1/4"
27"	5-1/2"
30"	6"
33"	6-1/4"
36"	6-1/2"
39"	7"

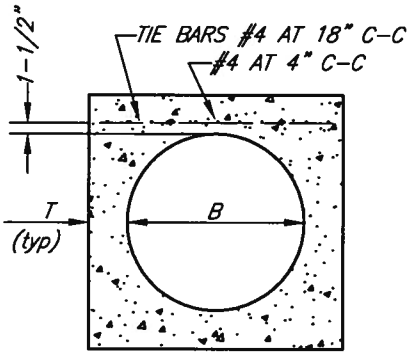

SECTION Y-Y

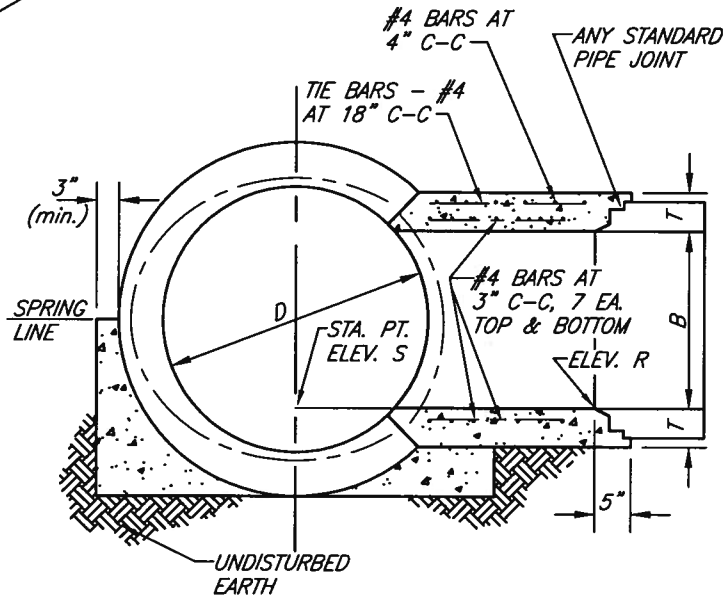

SECTION Z-Z

NOTES:

1. Values for A,B,C'D,E', & L, elevations R and S shown on improvement plan. (See Sheet 2 of 2.)
2. Cradle may be omitted on side opposite lateral inlet when connecting with existing storm drain pipe
3. Transverse reinforcement in pipe shall be cut in center of opening and bent to uniform distance from top and bottom of junction structure.
4. Concrete shall be class 560-C- 3250.
5. Reinforcing steel shall be 1.5" clear from face of concrete.
6. Floor of Structure shall be steel-troweled to spring line.

APPROVED BY
CITY ENGINEER — DATE 5/18/11

MARK	REVISIONS	APPR.	DATE

CITY OF RIVERSIDE
PUBLIC WORKS DEPARTMENT

JUNCTION STRUCTURE B

STANDARD DRAWING NO. 421

Sheet 1 of 2

STORM DRAIN MAIN

D/D2	ANGLE VALUE	30	40	50	60	70	80
12	C	2.2	1.8	1.6	1.5	1.4	1.3
	E	1.4	1.0	0.7	0.5	0.3	0.1
15	C	2.5	2.0	1.8	1.6	1.5	1.5
	E	1.7	1.2	0.8	0.6	0.4	0.2
18	C	2.8	2.3	2.0	1.8	1.7	1.6
	E	1.9	1.3	0.9	0.6	0.4	0.2
21	C	3.1	2.5	2.2	2.0	1.9	1.8
	E	2.2	1.5	1.1	0.7	0.5	0.2
24	C	3.4	2.7	2.4	2.2	2.0	2.0
	E	2.5	1.7	1.2	0.8	0.5	0.3
27	C	3.7	3.0	2.6	2.3	2.2	2.1
	E	2.7	1.9	1.3	0.9	0.6	0.3
30	C	4.0	3.2	2.8	2.5	2.4	2.3
	E	3.0	2.1	1.5	1.0	0.6	0.3
33	C	4.3	3.4	3.0	2.7	2.5	2.4
	E	3.3	2.3	1.6	1.1	0.7	0.3
36	C	4.6	3.7	3.2	2.9	2.7	2.6
	E	3.5	2.4	1.7	1.2	0.7	0.4
39	C	4.9	3.9	3.4	3.0	2.9	2.7
	E	3.8	2.6	1.9	1.3	0.8	0.4
42	C	5.3	4.2	3.6	3.2	3.0	2.9
	E	4.1	2.8	2.0	1.4	0.9	0.4
45	C	5.5	4.4	3.8	3.4	3.2	3.1
	E	4.4	3.0	2.1	1.5	0.9	0.4
48	C	5.8	4.6	4.0	3.6	3.3	3.2
	E	4.6	3.2	2.2	1.5	1.0	0.5
51	C	6.2	4.9	4.2	3.8	3.5	3.4
	E	4.9	3.4	2.4	1.6	1.0	0.5
54	C	6.5	5.2	4.4	4.0	3.7	3.5
	E	5.2	3.6	2.5	1.7	1.1	0.5
57	C	6.8	5.4	4.6	4.1	3.8	3.7
	E	5.4	3.7	2.6	1.8	1.1	0.6
60	C	7.1	5.6	4.8	4.3	4.0	3.8
	E	5.7	3.9	2.8	1.9	1.2	0.6
63	C	7.4	5.9	5.0	4.5	4.2	4.0
	E	6.0	4.1	2.9	2.0	1.3	0.6
66	C	7.7	6.1	5.2	4.7	4.3	4.2
	E	6.2	4.3	3.0	2.1	1.3	0.6
69	C	8.0	6.4	5.4	4.9	4.5	4.3
	E	6.5	4.5	3.2	2.2	1.4	0.7
72	C	8.3	6.6	5.6	5.0	4.7	4.5
	E	6.8	4.7	3.3	2.3	1.4	0.7
75	C	8.6	6.8	5.8	5.2	4.8	4.6
	E	7.0	4.8	3.4	2.3	1.5	0.7
78	C	9.0	7.1	6.0	5.4	5.0	4.8
	E	7.3	5.0	3.5	2.4	1.5	0.7
81	C	9.3	7.3	6.2	5.6	5.2	4.9
	E	7.6	5.2	3.7	2.5	1.6	0.8
84	C	9.6	7.6	6.4	5.7	5.3	5.1
	E	7.9	5.4	3.8	2.6	1.7	0.8
87	C	9.9	7.8	6.6	5.9	5.5	5.3
	E	8.1	5.6	3.9	2.7	1.7	0.8
90	C	10.2	8.1	6.8	6.1	5.7	5.4
	E	8.4	5.8	4.1	2.8	1.8	0.9
93	C	10.5	8.3	7.0	6.3	5.8	5.6
	E	8.7	6.0	4.2	2.9	1.8	0.9
96	C	10.8	8.5	7.2	6.5	6.0	5.7
	E	8.9	6.2	4.3	3.0	1.9	0.9

STORM DRAIN LATERAL

B	ANGLE VALUE	30	40	50	60	70	80
12	C	1.4	1.0	0.7	0.5	0.3	0.1
	E	1.7	1.3	1.1	1.0	0.9	0.8
	L	3.3	2.6	2.2	1.9	1.8	1.7
15	C	1.7	1.2	0.8	0.6	0.4	0.2
	E	2.0	1.5	1.3	1.1	1.0	1.0
	L	3.9	3.0	2.6	2.3	2.1	2.0
18	C	1.9	1.3	0.9	0.6	0.4	0.2
	E	2.3	1.8	1.5	1.3	1.2	1.0
	L	4.5	3.5	2.9	2.6	2.4	2.0
21	C	2.2	1.5	1.1	0.7	0.5	0.2
	E	2.6	2.0	1.7	1.5	1.4	1.3
	L	5.2	4.0	3.4	3.0	2.7	2.6
24	C	2.5	1.7	1.2	0.8	0.5	0.3
	E	2.9	2.2	1.9	1.7	1.5	1.5
	L	5.8	4.5	3.8	3.3	3.1	2.9
27	C	2.7	1.9	1.3	0.9	0.6	0.3
	E	3.2	2.5	2.1	1.8	1.7	1.6
	L	6.3	4.9	4.1	3.7	3.4	3.2
30	C	3.0	2.1	1.5	1.0	0.6	0.3
	E	3.5	2.7	2.3	2.0	1.9	1.8
	L	7.0	5.4	4.6	4.0	3.7	3.6
33	C	3.3	2.3	1.6	1.1	0.7	0.3
	E	3.8	2.9	2.5	2.2	2.0	1.9
	L	7.6	5.9	4.9	4.4	4.0	3.9
36	C	3.5	2.4	1.7	1.2	0.7	0.4
	E	4.1	3.2	2.7	2.4	2.2	2.1
	L	8.2	6.4	5.3	4.7	4.3	4.1
39	C	3.8	2.6	1.9	1.3	0.8	0.4
	E	4.4	3.4	2.9	2.5	2.4	2.2
	L	8.8	6.9	5.8	5.1	4.7	4.5
42	C	4.1	2.8	2.0	1.4	0.9	0.4
	E	4.8	3.7	3.1	2.7	2.5	2.4
	L	9.5	7.4	6.2	5.5	5.1	4.8

EXAMPLE:

Given D = 36" A = 60° B = 27"
Find L, C', E'

Solution:

1. Enter Storm Drain Main Table with the given D & A:

   $C_M = 2.9'$ $E_M = 1.2'$

2. Enter Storm Drain Lateral Table with the given B & A:

   $C_L = 0.9'$ $E_L = 1.8'$ $L = 3.7'$

3. $C' = C_M + C$
   $C' = 2.9$ ft. $+ 0.9$ ft. $= 3.8$ ft.

4. $E' = E_M + E_L$
   $E' = 1.2$ ft. $+ 1.8$ ft. $= 3.0$ ft.

APPROVED BY

CITY ENGINEER

5/18/11
DATE

MARK	REVISIONS	APPR.	DATE

CITY OF RIVERSIDE
PUBLIC WORKS DEPARTMENT

JUNCTION STRUCTURE B

STANDARD DRAWING NO. 421

Sheet 2 of 2