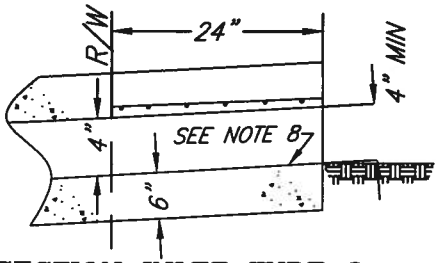

SECTION INLET TYPE 2

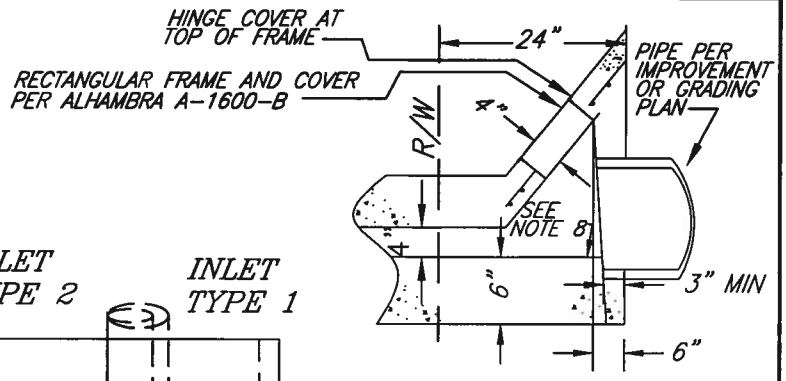

SECTION INLET TYPE 1

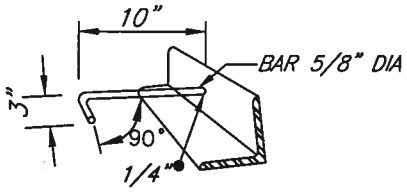

DETAIL OF ANCHOR

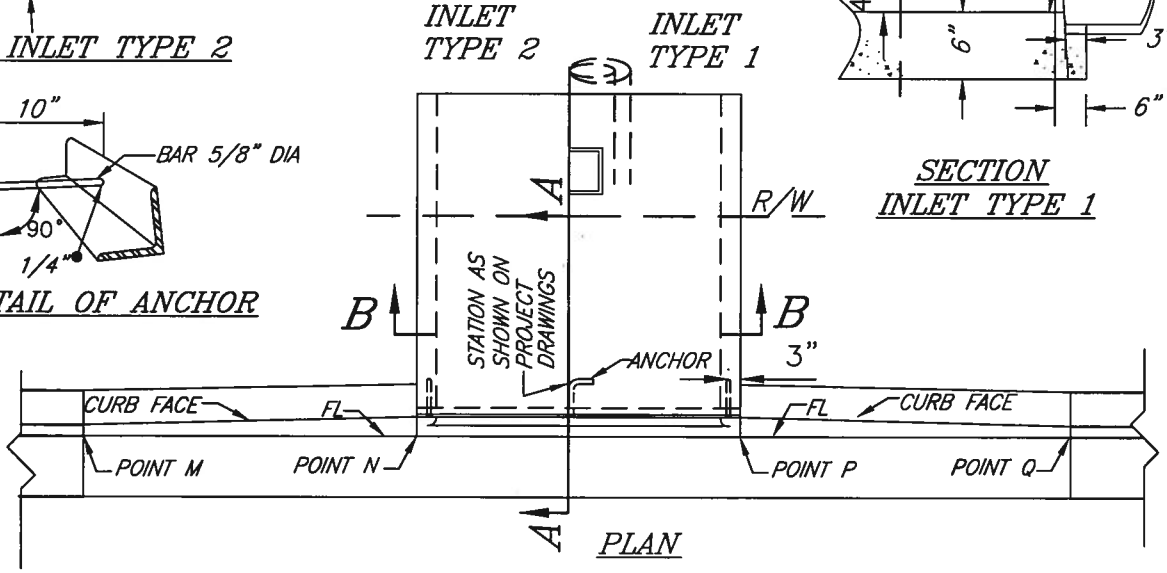

PLAN

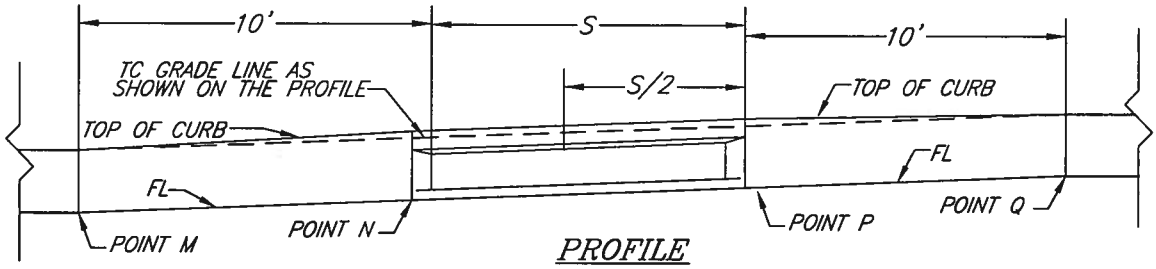

PROFILE

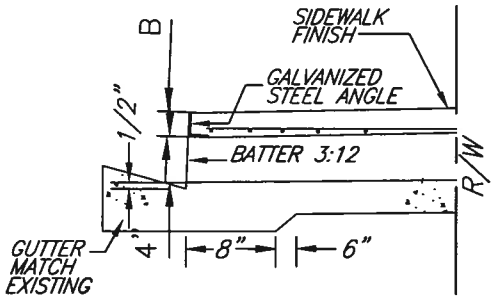

SECTION A-A

S	J BAR SPACING, IN
12"	7"
18"	7"
24"	7"
30"	7"
36"	7"
42"	6"
48"	5"
54"	5"
60"	5"
66"	4"
72"	3-1/2"

FOR S=30" AND LESS, USE 2 ANCHORS. OTHERWISE, USE 3 ANCHORS.

FOR S=18" AND LESS, B=3"

USE 2-1/2"x2"x3/8" GALVANIZED STEEL ANGLE.

OTHERWISE, B=4". 3-1/2" x 3" x1/2" GALVANIZED STEEL ANGLE

J BARS ARE #3

#3 @ 12" MAX OC

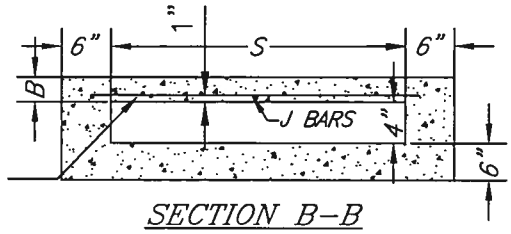

SECTION B-B

APPROVED BY

CITY ENGINEER

5/18/11

DATE

MARK	REVISIONS	APPR.	DATE

CITY OF RIVERSIDE

PUBLIC WORKS DEPARTMENT

PARKWAY DRAIN

STANDARD DRAWING NO. 410

Sheet 1 of 2

NOTES:

1. FLOOR OF BOX SHALL BE TROWLED SMOOTH.
2. IF THE TOE OF SLOPE IS ALLOWED WITHIN THE R/W, INLET TYPE 1 BEGINS AT THE TOE RATHER THAN AT THE R/W LINE.
3. FOR OPEN DITCH (TYPE 2), THE 24 INCH EXTENSION BEYOND THE R/W LINE IS NOT REQUIRED WHEN BACK OF WALK IS 24 INCHES OR MORE FROM THE R/W LINE IN ANY EVENT.
4. TOP OF INLET STRUCTURE (TYPE 1 AND 2) SHALL BE FLUSHED WITH ADJACENT SURFACE WHERE PRACTICAL.
5. A HEADED STEEL STUD 5/8" X 6-3/8", 1" HEAD, ATTACHED BY A FULL PENETRATION BUTT WELD MAY BE USED AS AN ALTERNATE ANCHOR.
6. NORMAL CURB FACE AT POINT M AND Q. CURB FACE B + 5 INCHES AT POINT N AND P.
7. THE 3 INCH LEG OF THE 5/8 INCH DIA ANCHORS SHALL BE PARALLEL TO THE TOP OF SIDEWALK.
8. SLOPE = 2%.

APPROVED BY

CITY ENGINEER

5/18/11

DATE

MARK	REVISIONS	APPR.	DATE

CITY OF RIVERSIDE

PUBLIC WORKS DEPARTMENT

PARKWAY DRAIN

STANDARD DRAWING NO. 410

Sheet 2 of 2