STANDARD DRAWINGS
FOR
CONSTRUCTION

CITY OF RIVERSIDE
DEPARTMENT OF PUBLIC WORKS

SUPPLEMENTAL NOTES
TO THE
CITY OF RIVERSIDE
STANDARD DRAWINGS

NO PERSON SHALL PERFORM ANY CONSTRUCTION ACTIVITY OR SHALL INSTALL ANY OBJECTS WITHIN THE PUBLIC RIGHT OF WAY OR PUBLIC EASEMENTS OF THE CITY OF RIVERSIDE WITHOUT A VALID CONSTRUCTION PERMIT OR, A STREET OPENING PERMIT OR, AN ENCROACHMENT PERMIT, ISSUED BY THE PUBLIC WORKS DEPARTMENT OF THE CITY OF RIVERSIDE.

CONSTRUCTION OF THE IMPROVEMENTS SHOWN IN THESE STANDARD DRAWINGS (EXCLUDING STANDARD DRAWINGS NO. 600 THROUGH NO. 699) SHALL BE IN ACCORDANCE WITH THE MOST RECENT EDITION OF THE STANDARD SPECIFICATIONS FOR PUBLIC WORKS CONSTRUCTION ("GREENBOOK"), EXCEPT FOR THE FOLLOWING MODIFICATIONS (THE MODIFICATIONS FOLLOW THE FORMAT OF THE GREENBOOK).

PART 1

GENERAL PROVISIONS

1-2 DEFINITIONS

Agency	The City of Riverside.
Base Course	The layer(s) of pavement placed between the surface course and the subgrade.
Board	The City Council of the City of Riverside.
Engineer	The Public Works Department, City Engineer or his duly authorized representative.
House Connection Sewer	Sewer lateral.
Inspector	The representative of the Engineer who is assigned to inspect conformance of the work in accordance with Plans and Specifications.
Open Graded A.C.	A thin layer of special asphalt concrete placed on a surface course or existing pavement to improve the surface

	conformation and friction factor. OGAC shall conform to the State Standard Specifications.
Overlay	A supplemental surface course placed on an existing pavement to improve its surface conformation or to increase its strength.
Private Engineer	(If applicable) The engineer who has prepared and has signed the Plans.
Right-of-way	Includes City of Riverside Public rights-of-way and easements.
Standard Plans	City of Riverside Standard Drawings for Construction.
Surface Course	The top layer of pavement (exclusive of OGAC), designed to provide structural value and/or a surface resistant to traffic abrasion.
Traveled Way	That portion of the roadway reserved for the movement of vehicles for the general public, exclusive of shoulders and auxiliary lanes. Where traffic has been diverted or restricted to certain lanes, with the approval of the Engineer, these diversions or restricted lanes become the traveled way.

1-3 ABBREVIATIONS

Aband.	Abandoned
ARSAT	Asphalt - Rubber Stress Absorbing Treatment
DGAC	Dense Graded Asphalt Concrete
OGAC	Open Graded Asphalt Concrete
R & R	Remove and Replace

The abbreviations shown on Standard Drawing No. 2 may also apply.

1-5 SYMBOLS

The symbols shown on Standard Drawing No. 1 may also apply.

2-5 PLANS AND SPECIFICATIONS

2-5.3.3.1 Shop Drawings. Shop drawings, when required need not be reproducible. A minimum of four copies shall be submitted for approval by the Engineer.

The Contractor shall submit shop drawings for diverting sewer flows when remodeling existing structures and when connecting proposed structures to the existing sewer. The Contractor shall submit shop drawings for the Spill Containment Plan as required in Section 7-8.4.1 herein.

6-3 SUSPENSION OF WORK

6-3.3 Stage III Smog Episode. No work shall be done on a day for which a Stage III smog episode is forecast as defined by the Air Quality Management District (AQMD). The Contractor will not be entitled to any delay damages for such a suspension, but an automatic time extension will be granted. When AQMD predicts that a Stage III episode level will be reached the following day, an announcement containing the specifics will generally be provided by 2 p.m. on the day the prediction is made.

7-8 PROJECT SITE MAINTENANCE

7-8.4.1 Sewage Spill Containment Plan. Contractors installing only four-inch (4") diameter residential sewer laterals to eight-inch (8") or smaller sewer mains are exempt from submitting a Spill Containment Plan. All others must prepare and submit to the Public Works Department a Sewage Spill Containment Plan as specified below.

In the event of a spill the Contractor shall contact the Engineer and Ernie Meloy, Field Maintenance Supervisor, 909-351-6191 or cell 909-712-2299. The Contractor shall document the spill by photographing its extent. These photographs shall be submitted to the City for inclusion in the Spill Report.

SEWAGE SPILL CONTAINMENT PLAN REQUIREMENTS: Chapter 14.12.295 of the Riverside Municipal Code prohibits the discharge of any pollutant to a storm drain or any surface, pipe, or waterway leading to a storm drain. The Contractor shall prepare and submit to the Engineer for review a sewage spill containment plan. No work will be permitted on the existing sewer system until the Engineer's review is completed. A copy of the plan shall be kept on the project site during construction. This plan shall describe the methods to be used to prevent or contain sewage spills. At a minimum the plan shall provide:

- A scaled drawing showing any proposed emergency containment area(s) and the methods to be used to construct them. This plan shall also show any storm drain inlets that could be affected by an accidental spill and methods to be used to prevent the inlets from accepting any sewage. In addition, show the controls to be used to limit access to the spill area by the public.
- Describe the methods to be used for removing sewage and cleaning of storm drain inlets, storm drains, canals, and arroyos. This description shall include methods for solids removal.
- Describe disinfecting and disinfection clean up methods. These methods shall show how disinfecting materials will be prevented from entering storm drains, canals, and arroyos.
- A scaled drawing(s) showing any proposed sewage by-pass pipes. This drawing shall indicate any sewer manholes proposed to be plugged and the day and time of day this operation will occur.
- The size and material of any by-pass pipes.
- The methods to be used to connect the by-pass pipe(s) to the existing sewer system.
- If pumping is proposed, describe the number and capacity of the pumps. Each pump, at a minimum, must be capable of passing a 3-inch diameter solid.
- If storage is proposed, provide the methods to be used for the sewage storage and removal from the

site. If a truck with a storage tank is to be used provide the capacity of the tank. If a water truck is proposed for this purpose it must be dedicated only for this operation.

7-8.6 Water Pollution Control.

7-8.6.1 General Requirements. For projects under one acre, the Contractor must follow and implement the Best Management Practices (BMPs) required by the attachment to these Supplemental Notes titled " Best Management Practices for Typical Construction Activities".

Contractor shall provide copies of certification that the superintendent or foreman has attended a Storm Water Pollution Prevention course within the last 12 months. Any work requiring the placement of BMP's shall not begin until this certification is provided to the Engineer.

7-10.4.2.2 Use of Explosives. If explosives are to be used, the Contractor, in addition to meeting the other requirements of this Section of the Standard Specifications, shall obtain a blasting permit from the City of Riverside Fire Department and pay the required fees (the exact amount of the fee can be obtained from the Fire Department, at (909) 826-5455) and shall give four-days notice to the Engineer and the Fire Department prior to any blasting.

PART 2
CONSTRUCTION MATERIALS

201-1 PORTLAND CEMENT CONCRETE

201-1.4.4 Hand Mixing. Hand mixing shall not be allowed.

203-6 ASPHALT CONCRETE

203-6.10 Asphalt Types for Various Uses. The materials listed below shall be used unless otherwise specified.

Blast furnace or steel slag is not acceptable as an aggregate in asphalt concrete.

TYPE		USE
B-AR-4000	-	Base course for streets.
C2-AR-4000	-	Base Course for alleys and trench resurfacing; Base course for streets with grades over 10%; Surface course for streets, alleys and trenches.
D2-AR-16000	-	Berm.
E-AR-4000	-	Hand raking in inaccessible areas and feather-edging.
D-AR-4000	-	Overlay less than 1" thick.

207 PIPE

207-8.1.1 Alternative Pipe for Sanitary Sewers. As an alternate to the vitrified clay pipe (VCP) specified on the plans, contractors may use, at their option, any plastic pipe described and specified in the Standard Specifications for Public Works Construction, except that plastic pipe shall be limited to use in areas that are predominantly residential and to sizes not exceeding 15 inches in diameter.

PART 3
CONSTRUCTION METHODS

300-1.3 Removal and Disposal of Materials.

300-1.3.1 General. The contractor is responsible for the proper disposal of any construction debris and any surplus excavation material.

300-1.3.2 Requirements.

(b) Concrete Pavement. Add the following sentence to this section: "When trenching in concrete pavement, the concrete pavement shall be removed on each side of the trench by one additional foot."

(c) Concrete Curbs, Walks, Gutters, Cross Gutters, Driveways and Alley Intersections.

1. **Curb or Curb and Gutter.** Curb or curb and gutter section to be replaced shall be not less than 5 feet in length. All saw cuts will be at right angles to the alignment of the curb or curb and gutter. Where curb or curb and gutter are on a curve, the saw cut will be on a radial line. If the saw cut would fall within one foot of a construction joint, expansion joint, weakened plane joint, or score mark, the cut shall be made on the joint or mark. The curb or curb and gutter shall not be cut in a place that would leave a piece less than 5 feet in length.

2. **Sidewalks.** No section of sidewalk to be replaced shall be less than 25 square feet in size. The length of sidewalk to be replaced shall be equal to the width. Where the sidewalk exceeds 8 feet in width, the minimum length shall be 4 feet. The exception to the above is when a section of sidewalk is removed for the installation of anything that requires a concrete foundation or a fire hydrant. The size of this section shall not exceed one-half the width of the sidewalk and shall be square. When the alignment of the sidewalk is on a curve, the saw cut shall be on a radial line; if he saw cut would fall within one foot of a construction joint, expansion joint, weakened plain joint, or score mark, the cut shall be made on the joint or mark. The sidewalk shall not be cut in a place that would leave a piece of sidewalk less than 25 square feet in size.

3. **Driveway Approaches.** Driveway approaches only be saw cut at right angles to to the curb alignment or on a radial line where the curb alignment is on a curve. The minimum length of section to be replaced or section that will remain shall be one-half of the difference between dimensions "A" and "B" plus 5 feet. This length shall be measured the same as "B" dimension. The curb and gutter shall be cut and replaced as curb and gutter on all types of driveway approaches with a minimum length of one-half the "B" dimension.

4. **Cross Gutters.** Cross gutters shall only be saw cut at right angles to the cross gutter and shall extend the full width of the cross gutter. The section to be removed or the section to remain in place shall not be less than 10 linear feet in length.

The saw cutting of the spandrel will be as directed in the field or as shown on the plans.

302-5 ASPHALT CONCRETE PAVEMENT

302-5.5 Distribution and Spreading. On street widenings, if the width of asphaltic concrete to be placed is 8' or less and/or the project length is not more than 150 feet, the Contractor, with the approval of the Engineer, may use a spreader box.

If approved on the plan, an asphalt concrete base course may be laid in one lift to a maximum compacted thickness of 6 inches.

Contractors shall not start paving operations after 3:00 p.m. with out permission from the Engineer.

On street widening projects where new paving joins the existing paving, the Contractor shall over the existing paving as shown on the plans or as directed by the City to produce a smooth crown section.

302-5.6 Rolling. For deep lift asphalt laid more than 4" thick, excepting paving replacement on trenches, rollers shall weigh not less than 10 tons. For asphalt patches or resurfacing of trenched 2 feet wide or less and a maximum of 100 feet long, 3-ton rollers are allowed.

302-11 FOG SEAL

Over all newly laid asphalt paving, the Contractor shall apply a seal coat of emulsified asphalt SS-1h as per Section 203-3 of the Standard Specifications. Rate of application shall be approximately 0.10 gallons per square yard or as directed by the Engineer.

303-5 CONCRETE CURBS, WALKS, GUTTERS, CROSS GUTTERS, DRIVEWAYS AND ALLEY INTERSECTIONS

303-5.1.3 Driveway Entrances. Unless otherwise specified on the plans or by the Engineer, driveway approaches and alley approaches shall be constructed in accordance with Standard Drawing No. 302.

If a new driveway approach is to connect to an existing curb and gutter, or when an existing curb and gutter depression is to be replaced with a full curb face curb, construction shall be ion accordance with Standard Drawing No. 303. Horizontal sawing of curbs is allowed with prior approval of the Engineer.

Alley approaches which are to drain an alley more than 50 feet long shall have the back of the alley approach at its center depressed by 0.25 feet to accept drainage.

303-5.5.2 Curb. Application of class "B" mortar to face of curbs is not required. Stamping of Contractor's name and year into the curb shall not be performed.

When a straight edge ten (10) feet long is laid on the top or face of the curb or on the surface of gutters, the surface shall not vary more than one-eighth (1/8) inch from the edge of the straight edge;

except at grade changes or curves.

303-5.7.1 Rejection of New Construction. The following shall be cause for rejection and subsequent replacement:

1. Transverse cracks through the C&G, exceeding 0.01 foot in width at any point.

2. Vertical displacement exceeding 0.01 foot, or which causes water to pond in the gutter for a distance exceeding 2 feet.

3. Serious or extensive surface imperfections which would cause the possibility of tripping.

4. Transverse cracks causing 5 feet or less of C&G to be "floating," or unattached to other curb and gutter. If the crack is in a driveway depression, remove one-half of dimension "B".

5. Cracks causing 25 square feet or less of sidewalks, approaches, cross gutters, or aprons to be "floating," or unattached to other approaches, cross gutters, or aprons.

Rejected concrete work shall be removed by means of a sawcut at a score line. If no score line exists, the minimum removed area or unscored area left in place shall be 25 square feet and the minimum width shall be 4 feet or the full width of the sidewalk.

306-1 OPEN TRENCH OPERATIONS

When the Contractor selects the option of installing plastic pipe, such option shall apply to a minimum reach of the sewer between any two manholes and shall include the house connection sewers in that reach.

306-1.1.7 Excavations Adjacent to Trees. The following specifications are to be adhered to when excavating adjacent to street trees in the City of Riverside. Any exceptions to these requirements must be approved by the Park and Recreation Department. (Chapter 15.08.020, Riverside Municipal Code.)

No excavation shall take place within the following specified distances from the perimeter of trees at ground level:

Tree Size	Clearance	Tree Size	Clearance
Palm Trees	1.5 feet	13-24 inches diameter	4-1/2 feet
0-6 inches diameter	3.0 feet	25-36 inches diameter	5.0 feet
7-12 inches diameter	3-1/2 feet	37 inches and up	6.0 feet

Tunneling is permitted if it is not through the center of the tree at a depth that will not destroy the anchor roots of the tree. Where it is necessary to excavate adjacent to existing trees, the Contractor shall avoid injuries to trees and tree roots. Excavation in areas where 2-inch and larger roots occur shall be done by hand. All roots 2" and larger in diameter shall be tunneled under and shall be heavily wrapped with wet burlap to prevent scarring or drying. Where trenching machine is run close to trees having

roots smaller than 2 inches in diameter, the wall of the trench adjacent to the trench shall be hand trimmed, making a clean cut through the roots. Any tree roots 1 inch or larger in diameter shall be painted with two coats of tree seal or approved equal. Trenches adjacent to trees shall be closed within 24 hours. No dirt can be piled up against a tree without a protective separator such as lumber, plywood, etc. The protective separator shall not be nailed to the street tree. The party responsible for any damage to a street tree will be billed in accordance with the Riverside Municipal Code.

306-1.1.9 Steel Plate Bridging. If, at the end of the working day, open trench backfilling operations have not been properly completed, steel plate bridging shall be required to make the entire roadway section safe and available to pedestrians and the travelling public. The maximum length of steel plate bridging allowed over an open trench for the entire project is 50 feet unless the Contractor obtains prior written approval of the City Engineer. Placement of steel plate bridging shall be approved by the Engineer.

The steel plate bridging installation shall conform to the following:

1. For speeds more than 45 mph: The pavement shall be cold planed to a depth equal to the thickness of the plate and to a width and length equal to the dimensions of the plate.

2. For speeds 45 mph or less: Approach plate(s) and ending plate (if longitudinal placement) shall be attached to the roadway by a minimum of 2 dowels pre-drilled into the corners of the plate and drilled 2 inches into the pavement. Subsequent plates are butted to each other. Fine grade asphalt concrete shall be compacted to form ramps, maximum slope 8.5% with a minimum 12 inch taper to cover all edges of the steel plate. When steel plates are removed, the dowel holes in the pavement shall be backfilled with either graded fines of asphalt concrete mix, concrete slurry, or an equivalent slurry satisfactory to the Engineer.

The Contractor shall be responsible for maintenance of the steel plates, shoring, and asphalt concrete ramps.

Unless a prior permission is obtained, steel plate bridging should not exceed 4 consecutive working days in any given week. Backfilling of excavations shall be covered with a minimum 3 inch temporary layer of cold asphalt concrete.

The following table shows the minimum thickness of steel plate bridging required for a given trench width:

Trench Width	Minimum Plate Thickness
10"	1/2"
23"	3/4"
31"	7/8"
41"	1"
63"	1 1/4"

For spans greater than 63", a structural design shall be prepared by a California registered Civil Engineer.

Steel plate bridging shall be steel designed for HS20-44 truck loading per the State Bridge

Design Specifications Manual. The Contractor shall maintain on the steel plate a non-skid surface having a minimum coefficient of friction equivalent to 0.35 as determined by California Test Method 342. If a different test method is used, the Contractor may utilize standard test plates with known coefficients of friction to correlate skid resistance results to California Test Method 342. These test plates are available from Caltrans District Materials Engineer.

A Rough Road sign (W33), with black lettering on an orange background, may be used in advance of steel plate bridging. This sign is to be used along with other required construction signing.

306-1.2 Installation of Pipe. The materials used for the construction sanitary sewers shall remain the same between manholes. When reconstructing sanitary sewer laterals the new pipe shall be the same as the existing lateral.

306-1.2.1 Bedding. Unless otherwise specified on the plans, plastic pipe shall be bedded per Std. Dwg. 452 as follows:

Type of Pipe	Depth of Cover Above Bedding	Bedding
Solid Wall (ABS & PVC)	0 to 4'	Case III
	4' to 17'	Case I
	17' to 30'	Case II N=D'+1"
	over 30'	Special Design
ABS and PVC Composite	less than 4'	Case II
	4' to 9'	Case I
	9' to 21'	Case I
	21' to 30'	Case II N=D'+1"
	over 30'	Special Design

306-1.3 Backfill and Densification. Trench backfill shall be per Std. Dwg. No. 453.

306-1.3.2 Mechanically Compacted Backfill. Impact type pavement breakers (stompers) will be permitted over vitrified clay, asbestos cement, cast iron or non-reinforced concrete pipe only after a minimum of four feet of backfill has been placed over the top of pipe and compacted by other means.

306-1.3.9 Backfill in Easements. Backfill shall comply with the same requirements as backfill in streets.

306-1.5.1 Temporary Resurfacing. Except as otherwise provided by the plans or approved by the Engineer, not more than 30 days shall elapse between the placement of temporary surfacing and its removal and replacement with permanent resurfacing..

306-7 CURB DRAINS

306-7.1 General. Two 30" long No. 3 reinforcing bars shall be embedded in the curb, centered over the drain. ABS pipe is not allowed.

SECTION 313 - STREET NAME AND PERMANENT TRAFFIC CONTROL SIGNS

Traffic control signs and posts shall be installed in accordance with Standard Drawings No. 662 and No. 666.

CITY OF RIVERSIDE
BEST MANAGEMENT PRACTICES
FOR TYPICAL CONSTRUCTION ACTIVITIES
(Projects less than one acre)

The discharge of any pollutants into the City storm drain system or natural drainage areas is prohibited per Section 14 of the City Municipal Code and the Riverside County Area-Wide Municipal Storm water permit issued by the State Water Resources Control Board. Drainage from construction sites and construction activities is prohibited from entering the City storm drain system and natural drainage areas. Any violations of the above provisions are subject to fines by the City and by the State Water Resources Control Board.

The following best management practices (BMPs) are to be implemented for the construction activities listed. These BMPs are considered to be a minimum of the activities necessary to protect the City storm drain system. The contractor may be required to implement further BMPs to assure no pollutant discharges enter the storm drain system. The contractor needs to work closely with the City inspector to identify any further BMPs, which may be necessary.

CONSTRUCTION ACTIVITIES	BEST MANAGEMENT PRACTICE
Portable Toilets	- The toilets may not be located in the street right of way. Perimeter protection must be placed around the toilet area to contain any drainage from toilet cleaning activities.
Sawcutting, grinding, paving	- Debris from these types of activities are to be swept or vacuumed daily (at a minimum) and disposed of at a landfill. - Drainage from these activities shall be contained or the catch basins down stream of these activities will be protected with sand bags. - Drainage contained shall be vacuumed daily (at a minimum) and the remaining debris disposed of at a landfill.
Concrete wash outs	- A washout/spoil area on site must be identified that will contain the concrete washout wastewater. The debris shall be removed at the end of the day, or; - The washout must be contained and removed off site daily.
Trenching	- Perimeter protection of the trenching spoil or trench area itself must be provided to prevent any erosion from the site, and - Catch basin protection must be provided to prevent drainage from entering the storm drain system. - Any sediment or debris shall be swept up daily at a minimum.

Spoil piles	- Spoil piles with the potential for draining off-site shall have perimeter erosion control and may need temporary cover.
Tracking	- Tracking pads are required for larger jobs as well as a continual sweeping plan. - Smaller jobs must sweep daily.
Vehicle maintenance	- Regularly scheduled vehicle maintenance activities such as oil changes and fluid refills shall be conducted off-site. - Any chemicals leaking from faulty equipment will be contained and repaired immediately. - A spill response plan must be identified that properly contains and disposes of any potential spill or leaks of hazardous materials including at a minimum oil, grease, hydraulic fluid, etc.
Vehicle washing	- Vehicle washing shall not occur on site
Sloped areas	- Sloped areas shall at a minimum be protected by perimeter erosion control. Larger slopes may also need erosion control at the top of slopes. These BMPs shall stay in place and be maintained until after the landscaping has completely been established.

STANDARD DETAIL DRAWINGS
DEPARTMENT OF PUBLIC WORKS

NUMBER	TITLE	LATEST REVISION DATE
GENERAL		
1	Symbols *(2 Sheets)*	6/12/86
2	Abbreviations *(2 Sheets)*	7/30/85
3	Shading Standard	4/23/84
STREETS		
101	Standard Street Dimensions	9/25/86
102	Cul-de-sac	7/13/78
103	Industrial Cul-de-sac	7/25/74
104	Standard Knuckle	6/12/86
110	Alley Sections	7/13/78
111	Class I Bikeway	7/7/82
115	Alley Turnaround	6/12/86
116	Right Angle Alley Turn	7/13/78
120	Intersection Layout	2/27/97
121	Median Openings	10/15/78
122	Reverse Taper	9/22/72
123	Parabolic Flare	1/22/80
180	Barricade for Dead End Streets	6/12/86
200	Curb and Gutter	3/15/04
210	Curb Transitions	8/3/78
220	Cross Gutters	11/9/82
221	Slotted Cross Gutter	7/13/78
250	Asphalt Concrete Berms	7/7/82
301	Area Covered by Permit for Driveway Approach *(2 Sheets)*	2/24/70
302	Driveway Approach *(3 Sheets)*	4/6/04
303	Driveway and Curb Depression (Existing Curb & Gutter)	10/17/95
304	Wheelchair Ramp *(4 Sheets)*	3/2/04
325	Sidewalk	4/23/84
326	Tree Wells and Covers	8/3/78
380	Chain Link Fence *(2 Sheets)*	12/27/84

STANDARD DETAIL DRAWINGS
DEPARTMENT OF PUBLIC WORKS

NUMBER	TITLE	LATEST REVISION DATE
DRAINS		
400	Catch Basin Type 1 (Back of Curb)	4/29/04
401	Catch Basin Type 2 *(2 Sheets)*	4/29/04
402	Catch Basin Inlet	3/7/83
403	Catch Basin Inlet Steel Plate Alternate	8/3/78
404	Catch Basin Outlet Transition Structure *(2 Sheets)*	7/14/78
405	Catch Basin *(2 Sheets)*	4/29/04
406	Catch Basin *(2 Sheets)*	4/23/84
407	Catch Basin *(2 Sheets)*	4/29/04
408	Catch Basin *(2 Sheets)*	7/7/82
409	Catch Basin *(2 Sheets)*	7/7/82
410	Curb Outlet *(2 Sheets)*	7/7/82
411	Under Sidewalk Drain	12/27/84
412	C.S.P. Inlet	10/26/82
421	Junction Structure B *(2 Sheets)*	12/23/86
422	Junction Structure C *(3 Sheets)*	12/23/86
423	Junction Structure No. 4 *(2 Sheets)*	11/9/82
424	Concrete Collar (Pipes 12"-66")	11/9/82
425	Cleanout Box	4/29/04
430	Manhole AX *(2 Sheets)*	7/7/82
431	Manhole EX *(2 Sheets)*	10/7/83
432	Manhole JM *(3 Sheets)*	12/27/84
450	Catch Basin Frame and Cover (Replacements Only)	4/23/84
451	Concrete Rings, Reducer and Pipe for Manhole Shaft *(2 Sheets)*	7/7/82
452	Pipe Bedding (Storm Drains and Sewers) *(2 Sheets)*	12/23/86
453	Trench Backfill *(2 Sheets)*	7/28/92
456	Timber Bulkhead	8/2/78
SEWERS		
500	Precast Concrete Sewer Manhole	2/27/97
503	Drop Manhole	6/12/86
554	Remodeling Details for Sewer Laterals *(2 Sheets)*	6/28/78
559	Precast Concrete Force Main Cleanout	5/5/04
560	Sewer Cleanout	10/26/82
561	Standard Chimney Pipe	7/14/78
562	Sewer Lateral	9/25/86
562A	Sewer Lateral with Property Line Cleanout	2/27/97
564	Sewer Pipe Encasement Across Trenches	7/13/78

STANDARD DETAIL DRAWINGS
DEPARTMENT OF PUBLIC WORKS

NUMBER	TITLE	LATEST REVISION DATE
TRAFFIC AND PARKING		
600	Standard Symbols – Traffic Signals and Lighting	7/17/69
606	Traffic Signal Pull Box	3/2/70
612	Electrical Service Details – Overhead Riser	8/25/80
634	Lighting Standard Foundation – Parking Lot (Square)	4/5/83
635	Lighting Standard Foundation – Parking Lot (Round)	4/5/83
650	Steel Guard Rail (Beam Type)	6/23/70
658	Construction Signs	5/18/70
662	Street Name Signs (Style HA) - Minor Streets	4/17/90
662A	Street Name Signs (Style HA) - Major Streets	4/17/90
662B	Internally Illuminated Street Name Sign	10/22/84
665	Signs and Markers	6/28/82
666	Traffic Control Signs *(2 Sheets)*	2/2/87
667	Underground Service – Signal, Lighting and I.I.S.N.S.	7/13/93
668	Sign Mounting Detail for Traffic Signal Framework	4/26/71
669	Wiring Diagram for Internally Illuminated Street Name Signs	4/3/75
MISCELLANEOUS		
704	Concrete Block Wall (Freestanding) *(2 Sheets)*	10/7/83
707	Retaining Wall	11/16/66
708	Retaining Wall	11/16/66
740	Private Sewage Disposal Structures	7/14/78
742	Island Sink Plumbing Detail	7/14/78

Rev. 5/6/04

EXISTING UNDERGROUND UTILITIES

SANITARY SEWER	8" S	TELEPHONE CONDUIT	T — T
WATER LINE	6" W	ELECTRICAL CONDUIT	E — E
STORM DRAIN	24" SD	TRAFFIC SIGNAL	SIG — SIG
GAS LINE	3" G	FIRE ALARM	F — F
IRRIGATION LINE	20" IRR	CABLE TV	TV — TV
ELECTROLIER LIGHTING CONDUIT	ELC — ELC		
(Formerly: STREET LIGHTING	SL — SL)		

EXISTING TOPOGRAPHY:

- BLOCK WALL
- BOARD FENCE
- WIRE FENCE
- CHAIN LINK FENCE
- TOP OF SLOPE
- TOE OF SLOPE
- DIRECTION OF FLOW

- SANITARY SEWER M.H.
- SANITARY SEWER CLEANOUT
- STORM DRAIN M.H.
- IRRIGATION WEIR
- WATER M.H.
- GAS M.H.
- ELECTRIC M.H.
- TELEPHONE M.H. OR VAULT
- WATER METER
- FIRE HYDRANT
- SPRINKLER HEAD
- VALVE
- BUS STOP SIGN
- POLE & GUY ANCHOR
- POWER POLE
- TELEPHONE POLE
- JOINT USE POLE
- PULL BOX
- TRAFFIC SIGN
- PARKING METER
- FIRE ALARM BOX
- STREET NAME SIGN
- GAS METER
- MAIL BOX
- FAUCET
- WALK-DON'T WALK PEDESTRIAN SIGNAL
- PEDESTRIAN PUSH BUTTON
- RAILROAD TRACKS
- RAILROAD SIGN
- RAILROAD SIGNAL
- TRAFFIC SIGNAL
- TRAFFIC SIGNAL ON MAST ARM
- TRAFFIC SIGNAL CONTROLLER
- TRAFFIC SIGNAL PRESSURE DETECTOR
- TRAFFIC SIGNAL LOOP DETECTOR
- ELECTROLIER & TRAFFIC SIGNAL ON MAST ARM
- ELECTROLIER (UPRIGHT)
- ELECTROLIER

APPROVED [signature] DATE 11/10/82
PUBLIC WORKS DIRECTOR - R.C.E. 18793

MARK	REVISIONS	APPR.	DATE
1	CHANGED RR SYMBOL & E TO PP - POWER POLE	[initials]	6-12-86

CITY OF RIVERSIDE
PUBLIC WORKS DEPT. - ENGINEERING DIV.

UNDERG'D & TOPO. LEGEND

STANDARD DRAWING NO. 1

SHT. 1 OF 2

EXISTING TOPOGRAPHY (CONT.)

CONCRETE

ASPHALT

EP (asphalt) (dirt) EP EDGE OF PAVEMENT

BUILDING

UNDERGROUND STRUCTURE

OVERHANGING STRUCTURE

PCC CURB

PCC CURB & GUTTER

AC BERM

DECIDUOUS TREE

PALM TREE

SHRUBBERY

TREE STUMP

BCD

APPROVED Robert P. Wade DATE 11/10/82
PUBLIC WORKS DIRECTOR - R.C.E. 18793

MARK	REVISIONS	APPR.	DATE

CITY OF RIVERSIDE
PUBLIC WORKS DEPT. - ENGINEERING DIV.

UNDERG'D & TOPO. LEGEND

STANDARD DRAWING NO. 1

SHT. 2 OF 2

Ac. - Acre
Ang. or ∢ - Angle
Area - Spell Out
Ave. - Avenue
Avg. - Average
Blvd. - Boulevard
Calc. - Calculated
C - Center
Cir. - Circle
c.f.m. - Cubic Feet/Minute
c.f.s. - Cubic Feet/Second
corr. - Corrugated
Co. - County or Company
C.M.P. - Corrugated Metal Pipe
C.M.P.A. - Corrugated Metal Pipe Arch
cor. - Corner
C.P. - Concrete Pipe
C.R. - Curb Return
cu. ft. - Cubic Feet
c.y. - Cubic Yards
D.G. - Decomposed Granite
Dr. - Drive
E - East
E'ly - Easterly
Elev. - Elevation
Est. - Estimate
E.T.W. - Edge of Traveled Way
Ft - Foot
F.B. - Field Book
Fd. - Found
Gar. - Garage
Guy - Guy wire or pole
Hse. - House
Irr. - Irrigation Pipe
Lat. - Lateral
L.F. - Linear Feet
Ln. - Lane
Lt - Left
Min. - Minimum
M.O. - Middle Ordinate
M.O.C. - Middle of Curve
N - North
N'ly - Northerly
NE'ly - Northeasterly
NW'ly - Northwesterly
N.I.C. - Not In Contract
N.T.S. - Not to Scale
No. - Number
Pl. - Place
Pt. - Point
R - Radius
R & R - Remove and Replace
Rd. - Road
R.E. - Registered Engineer
Rec. - Record
Riv. - Riverside
R/S - Record of Survey
Rt. - Right
Rwy. - Railway
R.W. Hdr. - Redwood Header
S.B. - San Bernardino
SBB&M - San Bernardino Base and Meridian
S - South
S'ly - Southerly
SE'ly - Southeasterly
SW'ly - Southwesterly
Sec. - Section
Shld. - Shoulder
Sq. - Square
Spk. - Spike
St. - Street
Stk. - Stake
T.P. - Top of Pavement
Typ. - Typical
Vic. - Vicinity
V.P.I. - Vertical Pt. of Intersection
W - West
W'ly - Westerly

APPROVED William D. Gardner DATE 7-30-85
DEPUTY PUBLIC WORKS DIRECTOR, ENGINEERING
RCE-11405

MARK	REVISIONS	APPR.	DATE

CITY OF RIVERSIDE
PUBLIC WORKS DEPT. - ENGINEERING DIV.

STANDARD ABBREVIATIONS

STANDARD DRAWING NO. 2

SHADING STANDARD

PLAN

PROPOSED CONSTRUCTION

PCC

AC PAVING
(BEHIND CURB)
DICK 1648 *

AC PAVING
(ROADWAY)

AC OVERLAY
SPEED-O-PRINT 952 *

DG SURFACE
DICK 1636 *

REMOVE & REPLACE 2
DICK 1634 *

EXISTING CONSTRUCTION

PCC

AC

BUILDING
MILO HARDING 92 *

ROOF OR OVERHANG

* BRAND AND NUMBER OF SCREEN PLATE.

SECTION

PROPOSED CONSTRUCTION

PCC

AC PAVING

BASE 1

EXISTING CONSTRUCTION

PCC

AC PAVEMENT
SPEED-O-PRINT 955 * 2

ROCK

UNDISTURBED SOIL
SPEED-O-PRINT 955 * 2

FILL COMPACTIONS

95% RELATIVE COMPACTION
DICK 1627 *

90% RELATIVE COMPACTION
DICK 1629 *

85% RELATIVE COMPACTION
DICK 1633 *

APPROVED _____ DATE _____
DIRECTOR OF PUBLIC WORKS

REVISIONS

DATE	MARK	BY	
7-7-82	1	[illegible]	Removed D.G. from Base
[illegible]	2	[illegible]	Added Remove & Replace and Speed-O-Print 952.

SHADING STANDARD

CITY OF RIVERSIDE · CALIFORNIA

ENGINEERING DIVISION · DEPT. OF PUBLIC WORKS

STANDARD DRAWING NO. 3

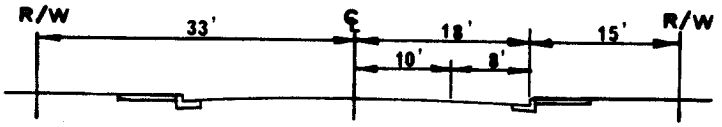

66' MINOR

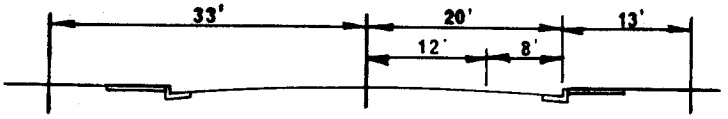

66' SECONDARY OR COLLECTOR

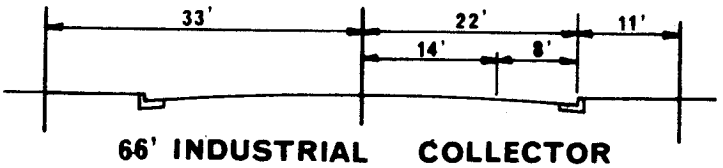

66' INDUSTRIAL COLLECTOR

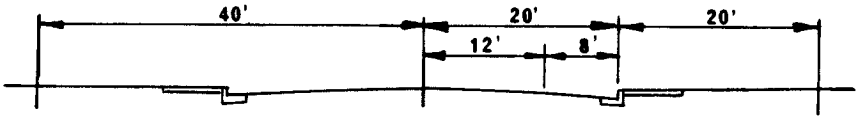

80' SECONDARY

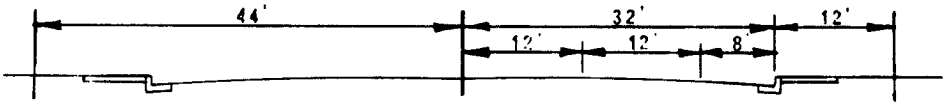

88' MAJOR

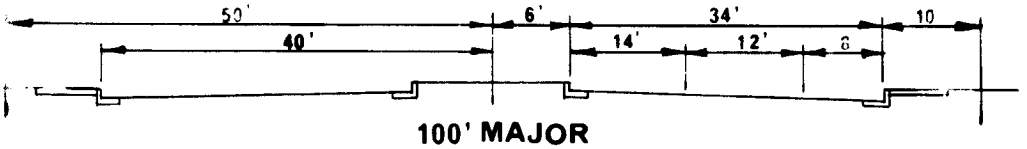

100' MAJOR

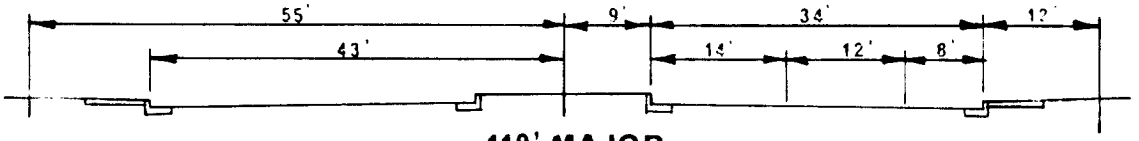

110' MAJOR

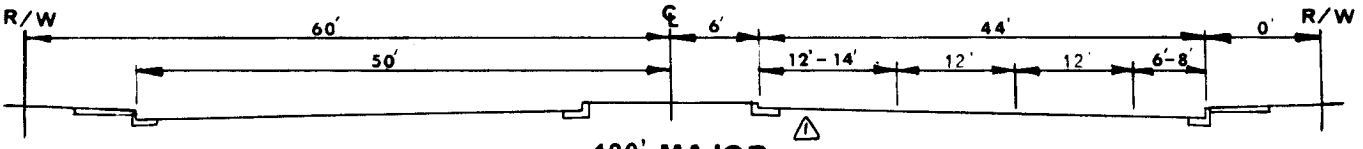

120' MAJOR

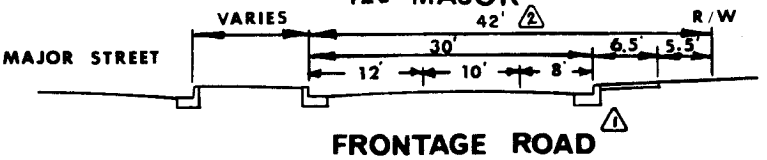

FRONTAGE ROAD

Note: Where frontage road partially exists, new construction shall conform to the existing.

APPROVED [illegible] DATE 6/14/78

APPROVED [illegible] DATE [illegible]

PUBLIC WORKS DIRECTOR - R.C.E. 18793

MARK	REVISIONS	APPR.	DATE
1	CHANGED 134' MAJOR TO 120'; ADDED FRONTAGE ROAD.	[illegible]	4/23/84
2	CHANGED ℄ S/W TO CURB S/W & FRONTAGE ROAD FROM 40' TO 42'	[illegible]	9-25-86

CITY OF RIVERSIDE

PUBLIC WORKS DEPT. - ENGINEERING DIV.

STANDARD STREET DIMENSIONS

STANDARD DRAWING NO. **101**

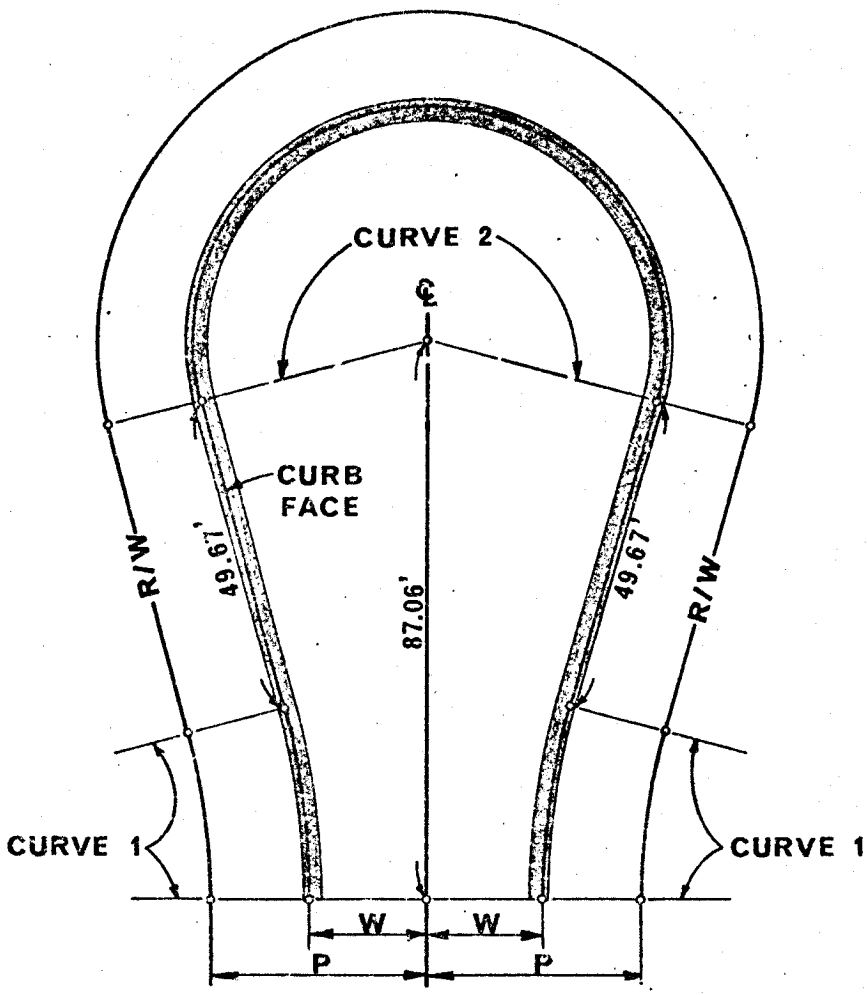

	CURB CURVE DATA							PVMT
	CURVE 1				CURVE 2			AREA
W	R	Δ	T	L	R	Δ	L	S.F.
18'	115'	15°	15.14'	30.11'	36'	210°	131.95'	5,991
20'	113'	15°	14.88'	29.58'	38'	210°	139.28'	6,667

	R/W CURVE DATA						
	CURVE 1				CURVE 2		
P	R	Δ	T	L	R	Δ	L
30'	103'	15°	13.56'	26.97'	48'	210°	175.93'
33'	100'	15°	13.17'	26.18'	51'	210°	186.93'

NOTE:

1. An offset cul-de-sac may be used at the option of the developer. Radii of curve 1 and curve 2 and the tangent curb line distance to be maintained for an offset cul-de-sac.

APPROVED [signature] DATE 6-8-73
PUBLIC WORKS DIRECTOR - R.C.E. 8134

MARK	REVISIONS	APPR.	DATE
1	revised note	[illegible]	7-13-78

CITY OF RIVERSIDE

PUBLIC WORKS DEPT. - ENGINEERING DIV.

CUL-DE-SAC

STANDARD DRAWING NO. 102

	CURVE 3		
	R	Δ	L
CURB	52'	220°	199.67'
R/W	60'	220°	230.38'

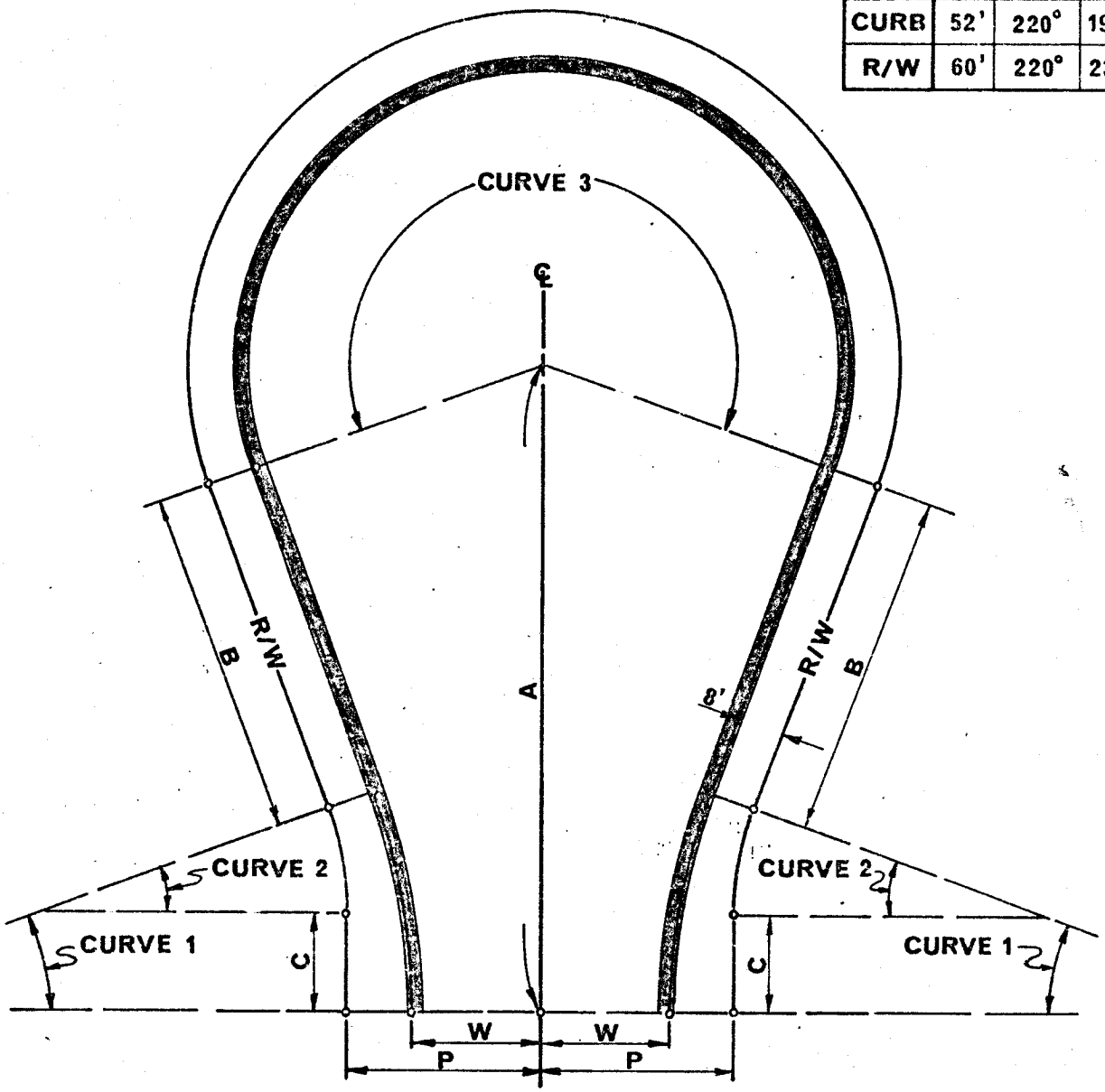

					CURVE 1				CURVE 2				PVMT AREA S.F.
W	P	A △1	B	C	R	Δ	T	L	R	Δ	T	L △1	
20'	33'	116.49'	65.00'	28.36'	110'	20°	19.40'	38.40'	19.08'	20°	3.36'	6.66'	11,534
22'	33'	110.99'	59.15'	17.02'	110'	20°	19.40'	38.40'	52.24'	20°	9.21'	18.24'	11,404

wdg APPROVED [signature] DATE 1-2-73
PUBLIC WORKS DIRECTOR - R.C.E. 8134

MARK	REVISIONS	APPR.	DATE
△1	Corrected length A(W=20') & curve 2 length L(W=20', W=22')	wdg	7.25.74

CITY OF RIVERSIDE
PUBLIC WORKS DEPT. - ENGINEERING DIV.

INDUSTRIAL CUL-DE-SAC

STANDARD DRAWING NO. 103

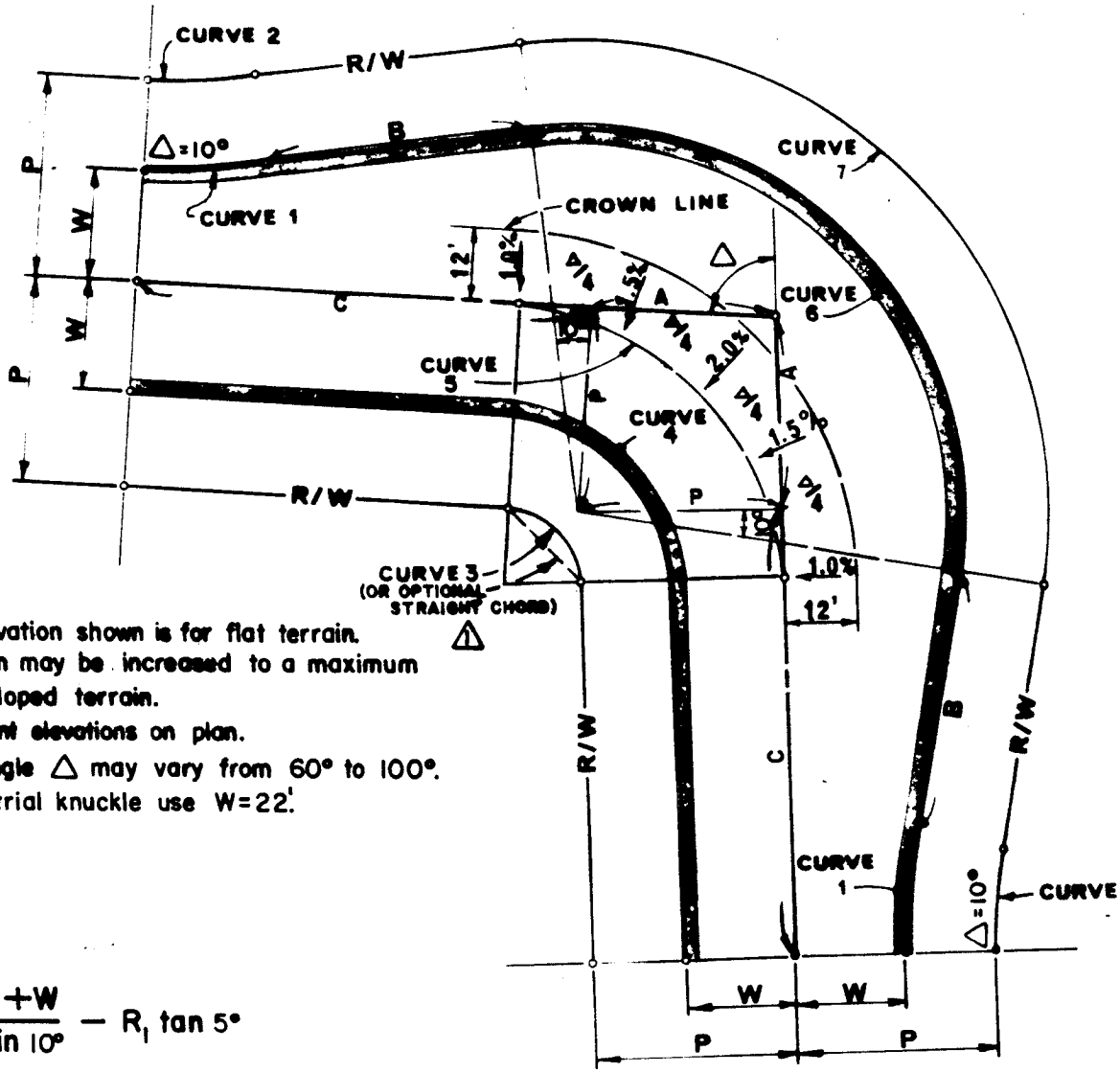

1. The superelevation shown is for flat terrain. Superelevation may be increased to a maximum of 6% for sloped terrain.
2. Show pavement elevations on plan.
3. Deflection angle Δ may vary from 60° to 100°.
4. For an industrial knuckle use W=22'.

$$A = P \tan \frac{\Delta}{2}^{\circ}$$

$$B = \frac{R_6}{\tan 10^\circ} - \frac{P+W}{\sin 10^\circ} - R_1 \tan 5^\circ$$

$$C = \frac{R_6}{\sin 10^\circ} - \frac{P+W}{\tan 10^\circ} + R_1 \tan 5^\circ$$

				100°>Δ>75°			75°>Δ>65°			65°>Δ>60°						
P	W	R_1	R_2	R_3	R_4	R_5	R_3	R_4	R_5	R_3	R_4	R_5	R_6	R_7	B	C
30	18	100	88	15	27	45	23	35	53	33	45	63	61	73	60.78	87.81
	20	100	90	17	27	47	25	35	55	35	45	65	61	71	49.26	76.47
	22	111	103	27	35	57	32	40	62	42	50	72	65	73	59.47	89.11
33	18	100	85	12	27	45	20	35	53	30	45	63	61	76	43.50	70.80
	20	100	87	14	27	47	22	35	55	32	45	65	61	74	31.98	59.46
	22	111	100	24	35	57	32	40	62	39	50	72	65	76	42.19	72.11

APPROVED [signature] DATE 4/23/82
PUBLIC WORKS DIRECTOR - R.C.E. 18793

Supersedes previous Std Dwg 104

1 ADDED OPTIONAL CHORD [signature] 6-12-86

MARK	REVISIONS	APPR.	DATE

CITY OF RIVERSIDE

PUBLIC WORKS DEPT. - ENGINEERING DIV.

STANDARD KNUCKLE

STANDARD DRAWING NO. 1[illegible]

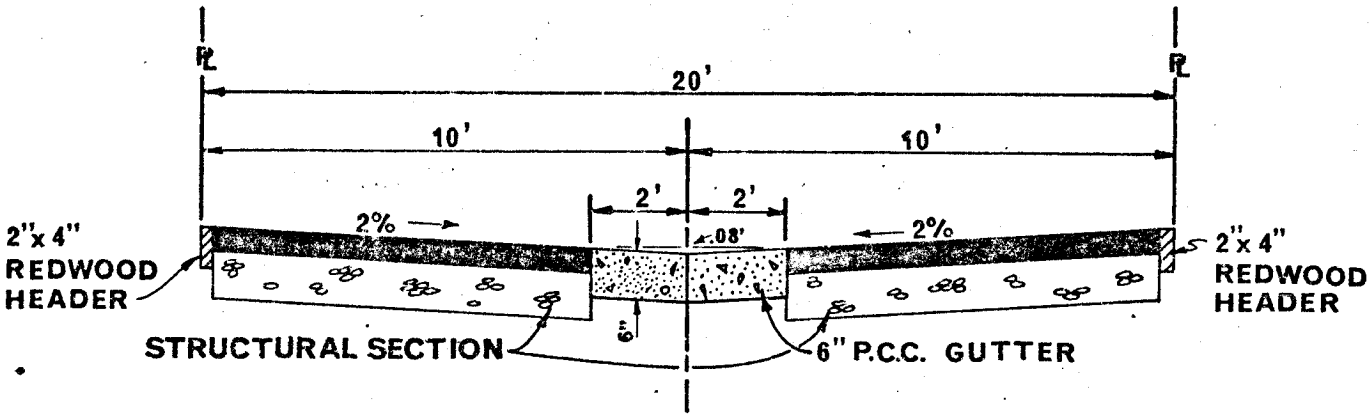

TYPE 1

GRADES LESS THAN 2.00%

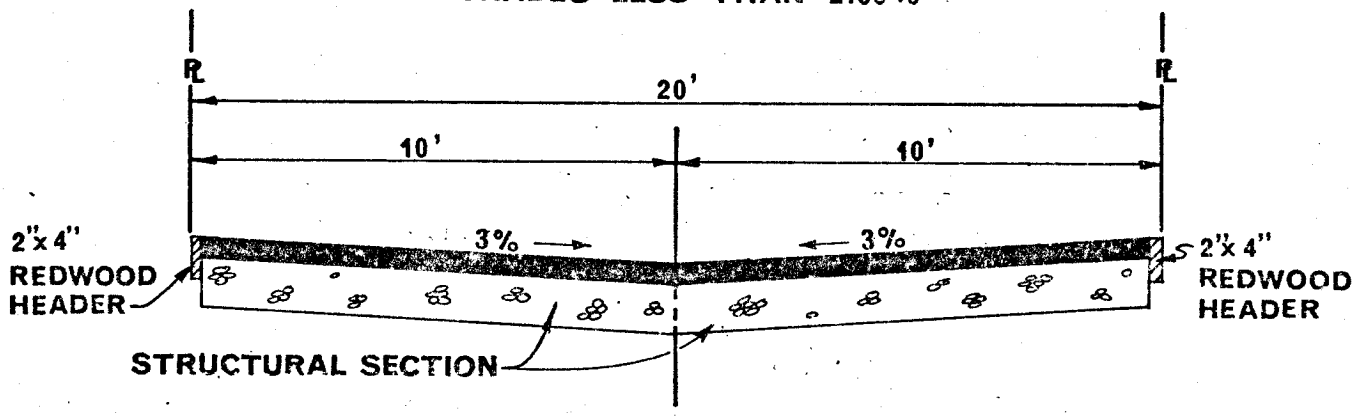

TYPE 2

GRADES OVER 2.00%

NOTES:

1. Alley width can be reduced in case of existing substandard right-of-way.
2. Cross fall may be adjusted to meet existing improvements (1% min.)
3. Redwood Headers required at edge of A.C. wherever edge is not protected by other structural materials, such as existing pavement, concrete, etc.
4. △1 Concrete for valley gutter shall be Class 520-C-2500.
5. Structural section shall be as shown on plan (T.I.=5.)
6. Weakened plane joints shall be constructed in valley gutter at 10' intervals.

APPROVED J. Martinez DATE 7-6-73
PUBLIC WORKS DIRECTOR - R.C.E. 8134

MARK	REVISIONS	APPR.	DATE
1	revised note 4, concrete class	[illegible]	7-13-78

CITY OF RIVERSIDE

PUBLIC WORKS DEPT. - ENGINEERING DIV.

ALLEY SECTIONS

STANDARD DRAWING NO. 110

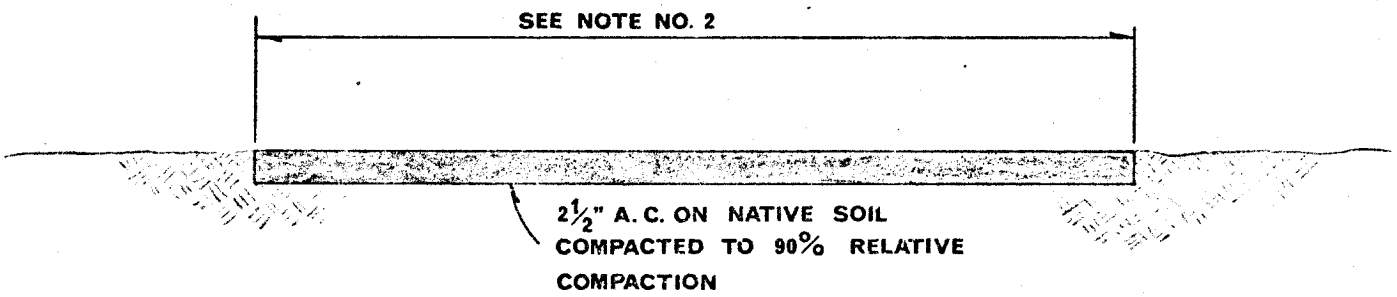

NOTES:

1. Cross slopes and longitudinal slopes shall be as directed by the Engineer and in such a manner as to provide for adequate drainage and smooth riding characteristics. Cross slope shall not be less than 2% nor more than 5%.

2. The minimum width of the bikeway shall be 8' for a two-way bikeway and 5' for a one-way bikeway unless otherwise shown on plans.

3. Location and alignment of bikeway shall be as shown on plans.

4. All tree limbs overhanging the bikeway and less than 8' above the bikeway shall be trimmed back as directed by the Engineer. Minimum lateral clearence to obstructions shall be 3'.

5. Asphaltic Concrete shall be Class D2-AR-4000. △1

6. Prior to placing asphaltic concrete, apply an approved herbicide, rate of application per manufacturers recommendations.

APPROVED Robert C. Wilke DATE 7/14/78
PUBLIC WORKS DIRECTOR - R.C.E. 18793

MARK	REVISIONS	APPR.	DATE
△1	CHANGED CLASS NAME		11-7-82

CITY OF RIVERSIDE
PUBLIC WORKS DEPT. - ENGINEERING DIV.

CLASS I BIKEWAY

STANDARD DRAWING NO. 111

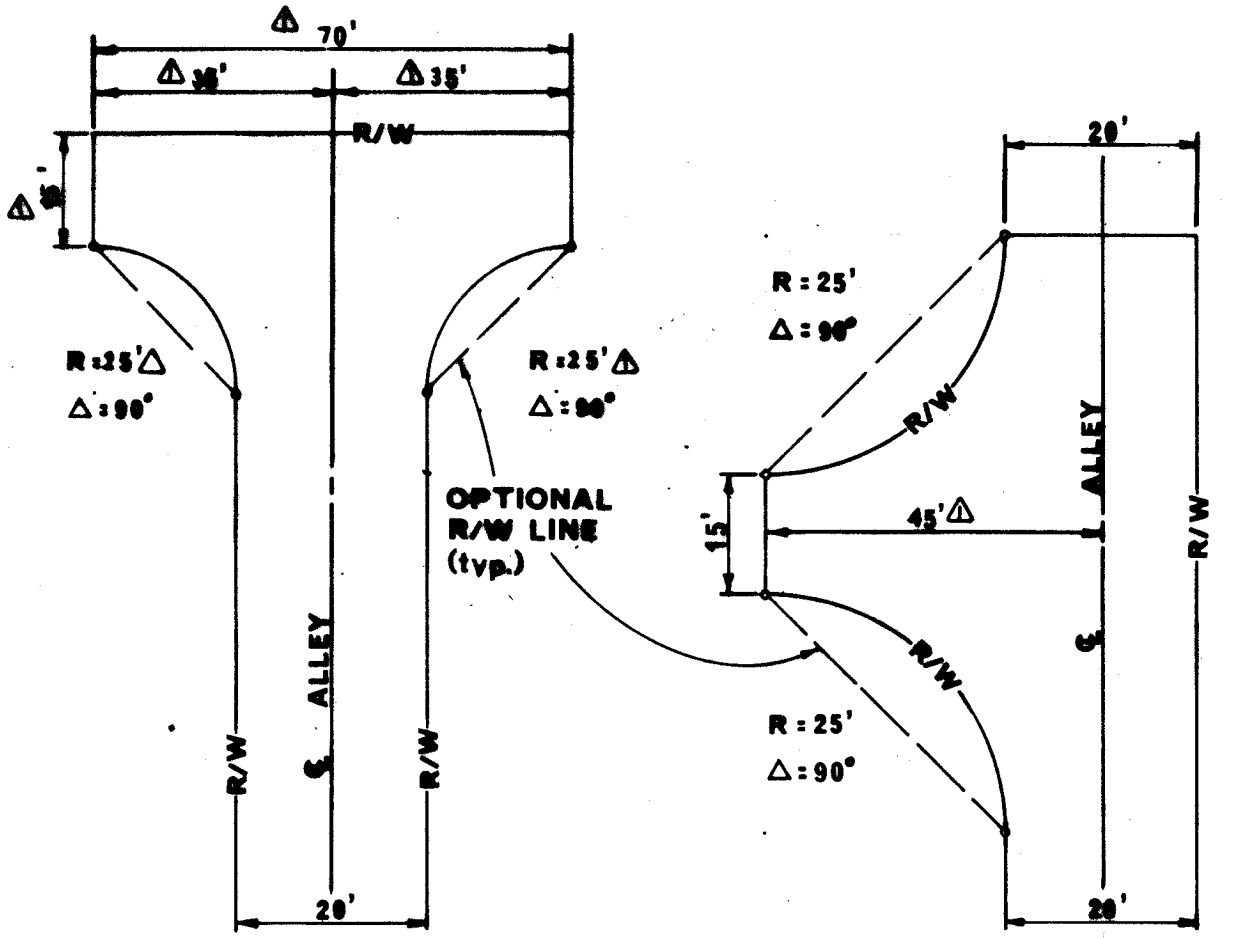

ALTERNATE "A"

ALTERNATE "B"

NOTES:

1. The Engineer has the option of using either alternate.
2. Pave entire right-of-way per Standard Drawing No. 110.
3. The Engineer may use optional Right-of-way lines as shown for each alternate.

APPROVED [signature] DATE 8-29-73
PUBLIC WORKS DIRECTOR - R.C.E. 8134

MARK	REVISIONS	APPR.	DATE
1	INCREASED LENGTH	[illegible]	6-12-8[illegible]

CITY OF RIVERSIDE

PUBLIC WORKS DEPT. - ENGINEERING DIV.

ALLEY TURNAROUND

STANDARD DRAWING NO. **115**

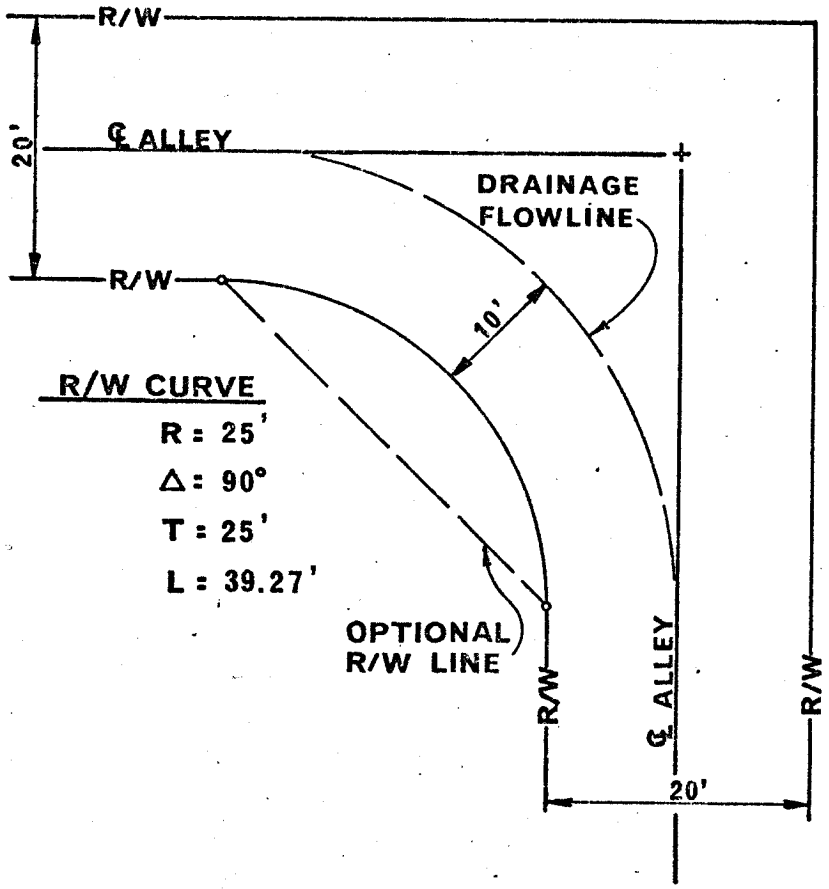

NOTES:

1. Pave entire right-of-way per Standard Drawing No. 110.
2. The Engineer may use optional right-of-way line as shown.

APPROVED [signature] DATE 8-29-73
PUBLIC WORKS DIRECTOR - R.C.E. 8134

MARK	REVISIONS	APPR.	DATE
1	revised note loc.	[illegible]	7-13-73

CITY OF RIVERSIDE

PUBLIC WORKS DEPT. - ENGINEERING DIV.

RIGHT ANGLE ALLEY TURN

STANDARD DRAWING NO. 116

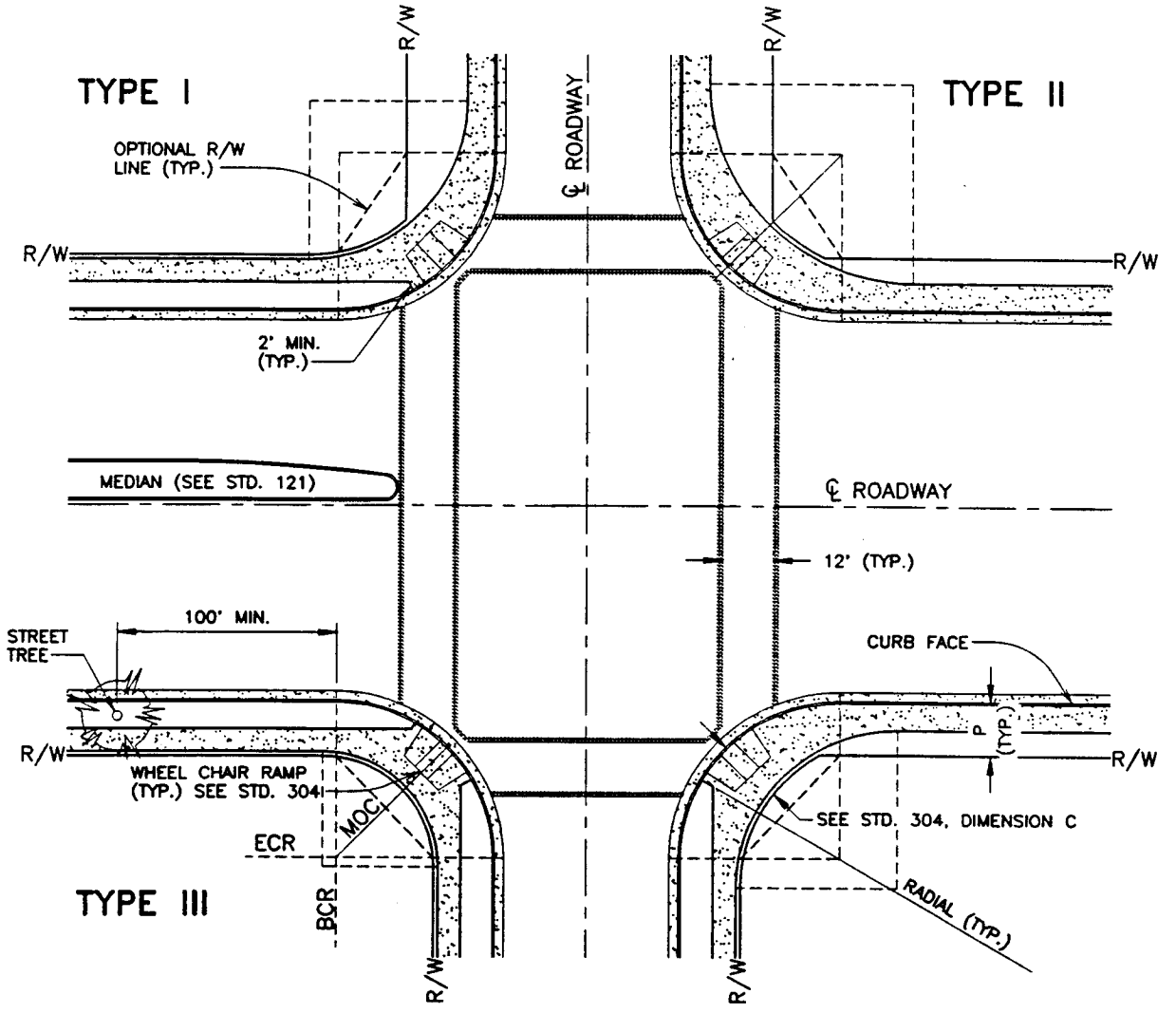

= PCC

NOTES:

1. CURB RETURN RADIUS SHALL BE 27' EXCEPT THAT IT SHALL BE 35' ON STREETS: A) SHOWN ON THE CIRCULATION AND TRANSPORTATION ELEMENT OF THE GENERAL PLAN.
   B) IN INDUSTRIAL AREAS.
   C) AS DETERMINED BY THE CITY ENGINEER.
2. R/W CURVES SHALL BE CONCENTRIC WITH BACK OF SIDEWALK CURVES.
3. WHERE WHEEL CHAIR RAMPS ARE REQUIRED SEE STANDARD DRAWING 304 FOR LOCATION.
4. WHERE INTERSECTION ANGLE IS SKEWED MORE THAN 10%, CROSSWALK LOCATION SHALL BE DETERMINED BY THE TRAFFIC ENGINEER.
5. WHERE INTERSECTION ANGLE IS SKEWED BY MORE THAN 5% AND/OR WHERE "P" IS GREATER THAN 15', BACK OF SIDEWALK CURVES SHALL BE DETERMINED BY THE ENGINEER TO MAINTAIN 4' MINIMUM BETWEEN THE BACK OF SIDEWALK AND BACK OF WHEEL CHAIR RAMP.
6. MEDIAN TO END AT CROSSWALK AS SHOWN.
7. THE CHART FOR BACK OF SIDEWALK CURVES IS OPTIONAL. MINIMUM DISTANCE FROM CURB FACE TO BACK OF SIDEWALK VARIES WITH THE HEIGHT OF THE CURB FACE, WITH 0.5' MINIMUM DISTANCE FROM THE BACK OF SIDEWALK TO RIGHT OF WAY.

BACK OF SIDEWALK CURVES

TYPE	P	C.R. RADIUS			
		27'		35'	
		6" CF	8" CF	6" CF	8" CF
I	12'	26.5'	33'	35'	41'
	15'	21'	28'	29'	36'
II	N/A	35'	42'	44'	49.5'
III	12'*	16'	22.5'	24'	30.5'
	13'*	14.5'	21'	22.5'	29'
	15'*	7.5'	14'	15.5'	22'

* IF "P" IS DIFFERENT FOR INTERSECTING STREETS, USE LARGER VALUE.

APPROVED Barry Beck DATE 2/27/97
PUBLIC WORKS DIRECTOR – R.C.E. 20900

MARK	REVISIONS	APPR.	DATE

CITY OF RIVERSIDE

PUBLIC WORKS DEPARTMENT – ENGINEERING DIVISION

INTERSECTION LAYOUT

STANDARD DRAWING NO. **120** Sheet 1 of 1

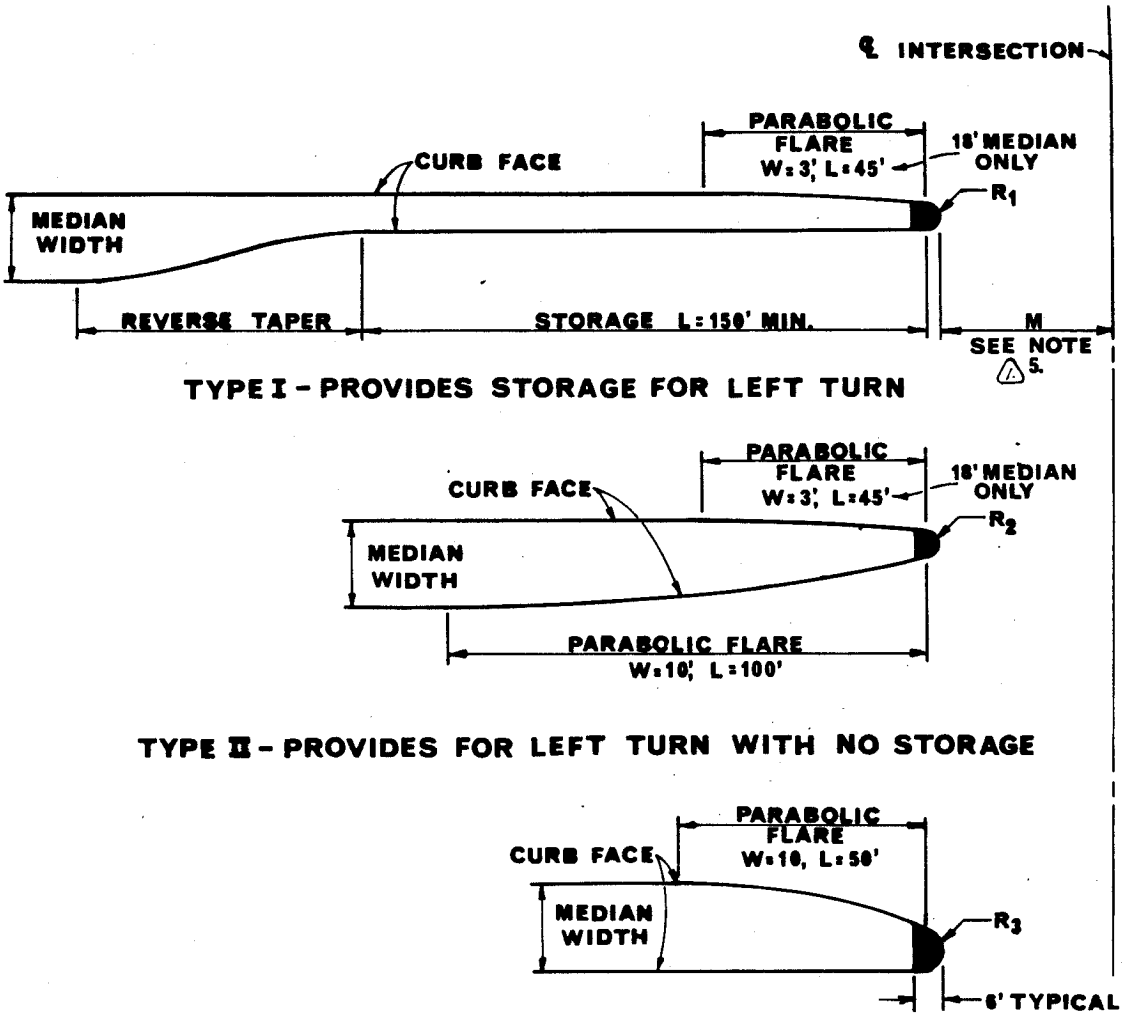

NOTES:

1. Show all median opening details on plan.
2. All median openings require approval of the City Traffic Engineer.
3. Lengths of flares, reverse tapers, and storage lanes may be changed because of physical limitations or traffic requirments.
4. Type II and III are normally used at "T" intersections only.
5. △ For intersections with driveways M = 30'. For intersections with streets see Standard Dwg. 120.

REFERENCE DWGS.

Std. 122 Reverse tapers.
Std. 123 Parabolic flares.

MEDIAN DIMENSIONS (FEET)					
MEDIAN WIDTH	REVERSE TAPER		NOSE RADIUS		
	W	L	R_1	R_2	R_3
18	10	120	2.5	2.5	4
12	10	120	1	1	1

APPROVED [signature] DATE 9-22-72
PUBLIC WORKS DIRECTOR - R.C.E. 8134

MARK	REVISIONS	APPR.	DATE
△	Deleted Table for M & added Note 5	[illegible]	10-18-[illegible]

CITY OF RIVERSIDE
PUBLIC WORKS DEPT. - ENGINEERING DIV.

MEDIAN OPENINGS

STANDARD DRAWING NO. 121

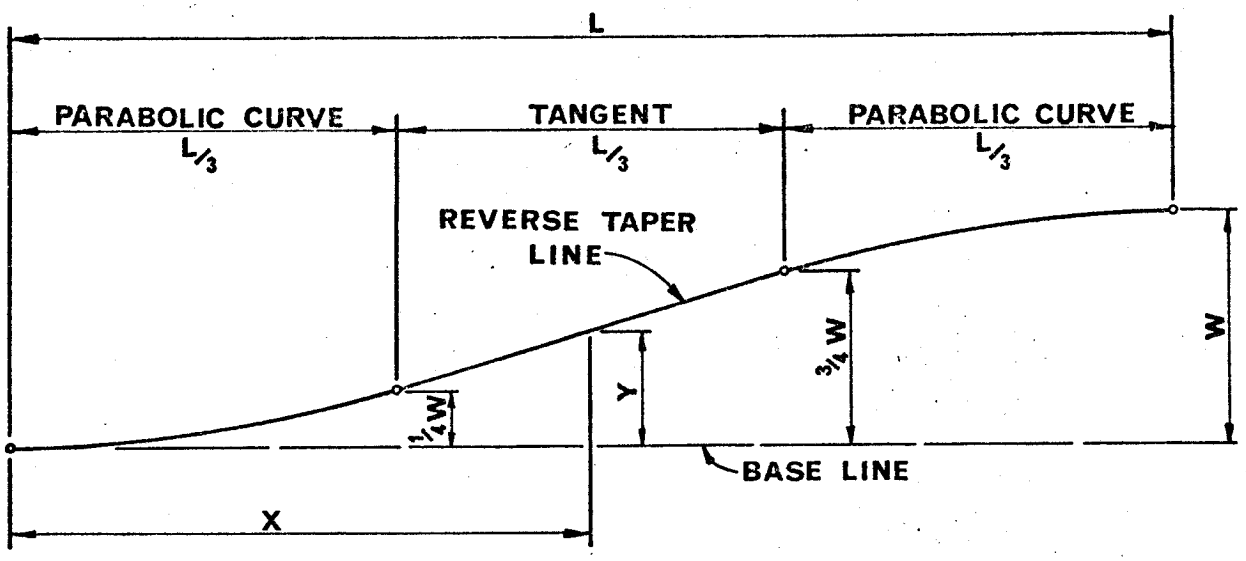

NOTE:

1. Base Line is parallel to traveled way.
2. Where the base line is curved the central portion will not be tangent. Use proportional offsets to define curve.

L	DISTANCE "X" ALONG BASE LINE (FT.)									
60'	5	10	15	20	30	40	45	50	55	60
90'	7.5	15	22.5	30	45	60	67.5	75	82.5	90
120'	10	20	30	40	60	80	90	100	110	120
W	**OFFSET "Y" FROM BASE LINE (FT.)**									
8'	0.12	0.50	1.12	2.00	4.00	6.00	6.88	7.50	7.88	8.00
9'	0.14	0.56	1.26	2.25	4.50	6.75	7.74	8.44	8.86	9.00
10'	0.16	0.62	1.41	2.50	5.00	7.50	8.59	9.38	9.84	10.00
11'	0.17	0.69	1.55	2.75	5.50	8.25	9.45	10.31	10.83	11.00
12'	0.19	0.75	1.69	3.00	6.00	9.00	10.31	11.25	11.81	12.00

APPROVED [signature] DATE 9-22-72
PUBLIC WORKS DIRECTOR - R.C.E. 8134

MARK	REVISIONS	APPR.	DATE

CITY OF RIVERSIDE
PUBLIC WORKS DEPT. - ENGINEERING DIV.

REVERSE TAPER

STANDARD DRAWING NO. 122

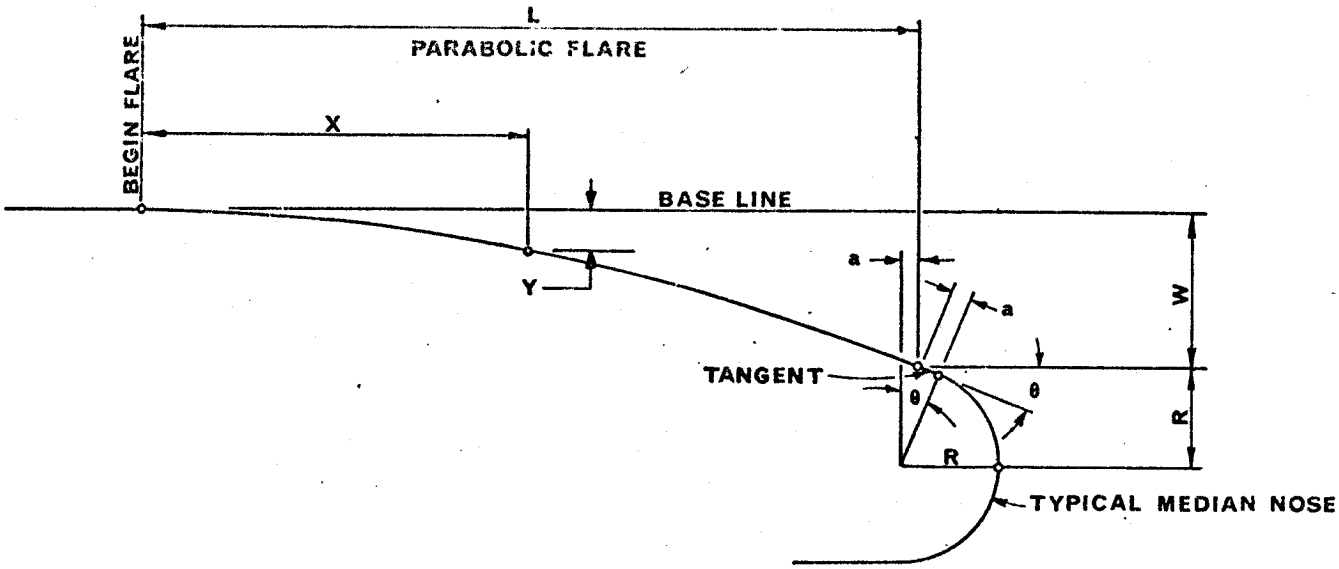

W	L \ X	10	20	25	30	40	45	50	60	70	75	80	90	100	θ	TAN ½θ
		OFFSET (Y) AT DISTANCES (X) ALONG BASE LINE (FT).														
5	25	0.80	3.20	5.00											21°48'05"	.1926
10	50	0.40	1.60		3.60	6.40		10.00								
5	50	0.20	0.80		1.80	3.20		5.00							11°18'36'	.0990
10	100	0.10	0.40		0.90	1.60		2.50	3.60	4.90		6.40	8.10	10.0		
3	45	0.15	0.59		1.33	2.37	3.00								7°35'41"	.0664
5	75	0.09	0.36		0.80	1.42		2.22	3.20	4.36	5.00					
6	90	0.07	0.30		0.67	1.19		1.85	2.67	3.63		4.74	6.00			

NOTE:

1. Show W, L, and "begin flare" station on plan.

DESIGN DATA

$\tan\theta = \frac{2W}{L}$

$a = R\tan\frac{1}{2}\theta$

$Y = W(\frac{X}{L})^2$

APPROVED [signature] DATE 9-22-72
PUBLIC WORKS DIRECTOR - R.C.E. 8134

MARK	REVISIONS	APPR.	DATE
None	Relocate Y Dimension	JJP	1-22-80

CITY OF RIVERSIDE
PUBLIC WORKS DEPT. - ENGINEERING DIV.

PARABOLIC FLARE

STANDARD DRAWING NO. 123

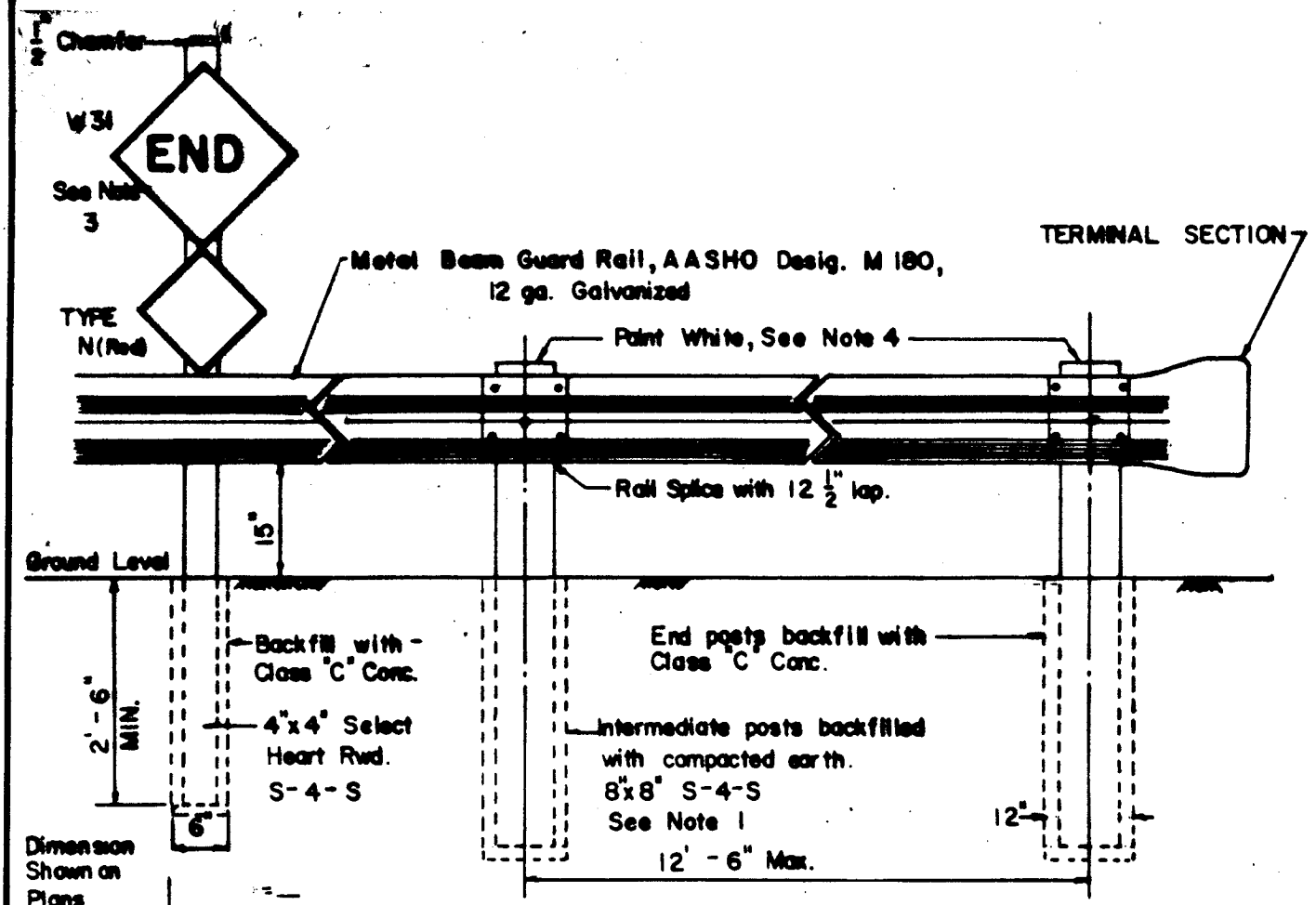

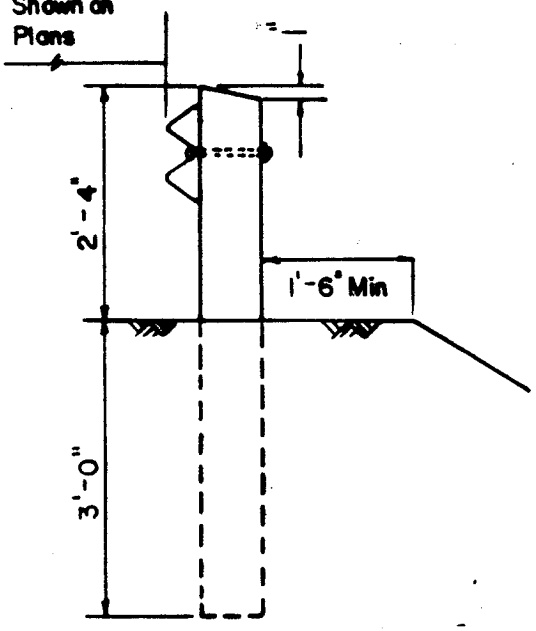

NOTES

1. Barricade posts shall be Dense Structural Redwood or Construction Grade Douglas Fir free of Heart center. Douglas Fir shall be pressure treated with approved salts such that the posts may be painted.

2. Overall length of barricade shall be within R/W of street end terminal sections of barricade shall be as close to R/W line as use of standard 12'-6" section lengths will allow.

3. Signs shall be a W-31 (24"x24" - Black on Yellow reflective sheet) and a Type N (18"x18" - Red Reflective sheet) signs shall be on .08" Thick Aluminum Blanks. Signs shall be located on centerline of each approaching driving lane, and mounted on 4"x4"x10'-0" redwood post. No portion of the signs shall be below top of guardrail.

4. All 8"x8" posts shall be painted with one coat of wood primer and two coats of fast drying finish paint for wood.

APPROVED Robert C. Lobb DATE 8/3/78
PUBLIC WORKS DIRECTOR - R.C.E. 18793

MARK	REVISIONS	APPR.	DATE
1	changed note 3	[illegible]	6-12-86

CITY OF RIVERSIDE
PUBLIC WORKS DEPT. - ENGINEERING DIV.

BARRICADE
FOR DEAD END STREETS

STANDARD DRAWING NO. 180

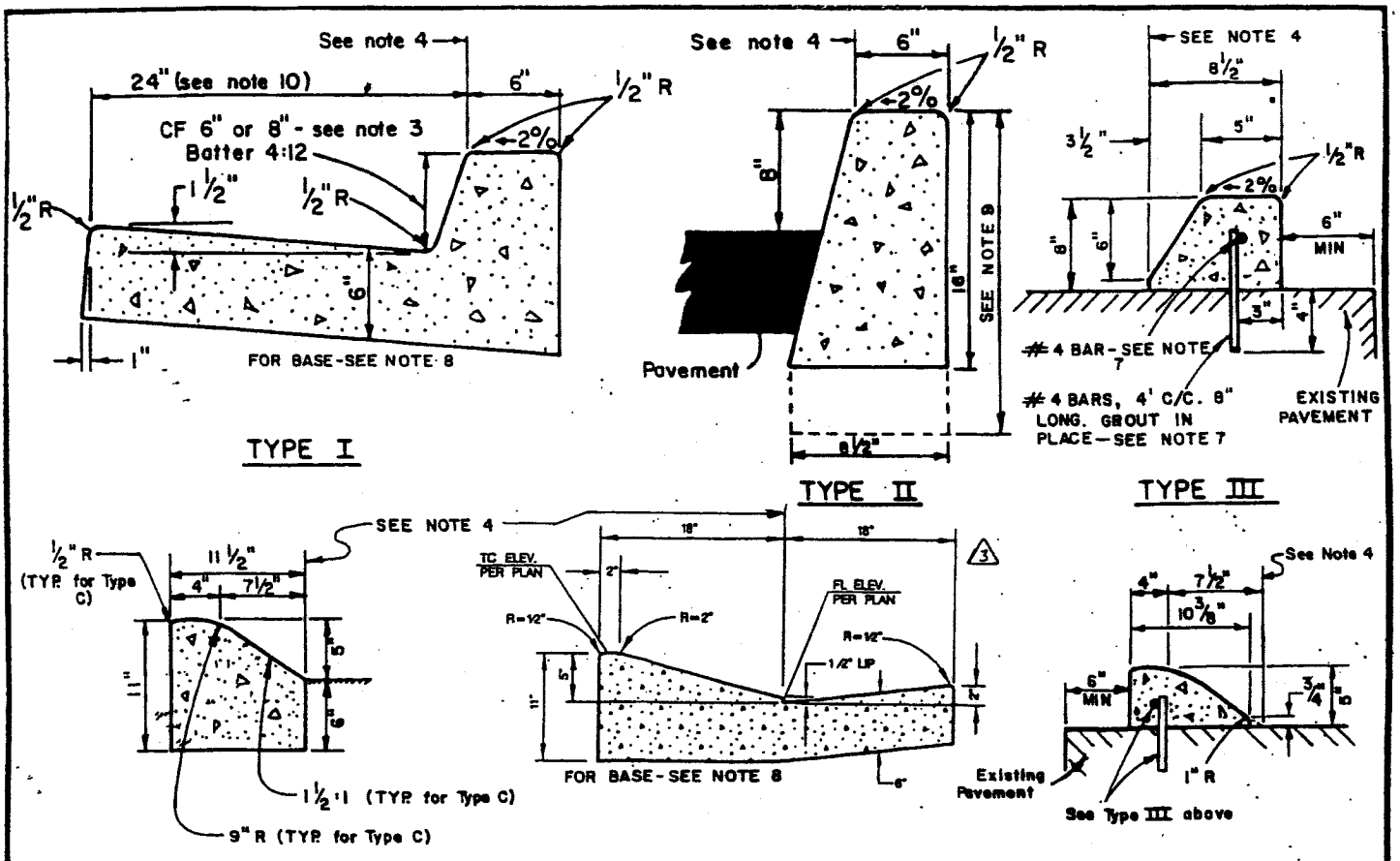

TYPE I

TYPE II

TYPE III

C1

C2

C3

TYPE C

(Curb face to be scored transversely with steel brushes)

NOTES:

1. Concrete shall be CLASS 520-C-2500 for formed curb or extruded curb.
2. Types II and III curb shall be used only where pavement slopes away from curb except as approved by City Engineer.
3. Types I, II, or III curb face shall be as specified on plans.
4. Curb location dimensions on plan shall be to this point.
5. Expansion joints (1/2" thick) shall be installed at all curb returns.
6. Weakened plane joints shall be constructed at 10' intervals throughout the length of the curb, at quarter points of curb returns, and at any point where the curb section is interrupted by a drainage outlet through the curb.
7. Epoxy approved by city may be used in lieu of bars.
8. When structural section thickness exceeds 14", the base shall be continued under curb and gutter.
9. Next to irrigated areas the curb ht. shall be the larger of 18" or the bottom of the base.
10. ~~For streets on the Bicycle Master Plan, a gutter width of 5' with a 5% cross slope may be required by the City Engineer.~~
11. Where grade is equal to or greater than 0.4%, curb and gutter shall be staked with 3' offsets at 25' intervals. Where grade is less than 0.4%, curb and gutter shall be staked with 3' offsets at 12.5' intervals and two rows of number 3 re-bar shall be placed in gutter with 3/4" dowel pins at all expansion joints.

CONCRETE QUANTITIES		
TYPE	CF	C.Y. PER L.F.
I	6"	0.05825
I	8"	0.06211
II	8"	0.02972
III	8"	0.0147
C1	—	0.02752
C2	—	0.06457
C3	—	0.00965

BLD

APPROVED [signature] DATE 12/14/82
PUBLIC WORKS DIRECTOR - R.C.E. 18793

MARK	REVISIONS	APPR.	DATE
1	ADDED NOTE 11.	[signature]	6-12-86
2	DELETED NOTE 10.	[signature]	11-3-97
3	REVISED C2.	DB	3/15/04

CITY OF RIVERSIDE

PUBLIC WORKS DEPT. - ENGINEERING DIV.

CURB AND GUTTER

STANDARD DRAWING NO. 200

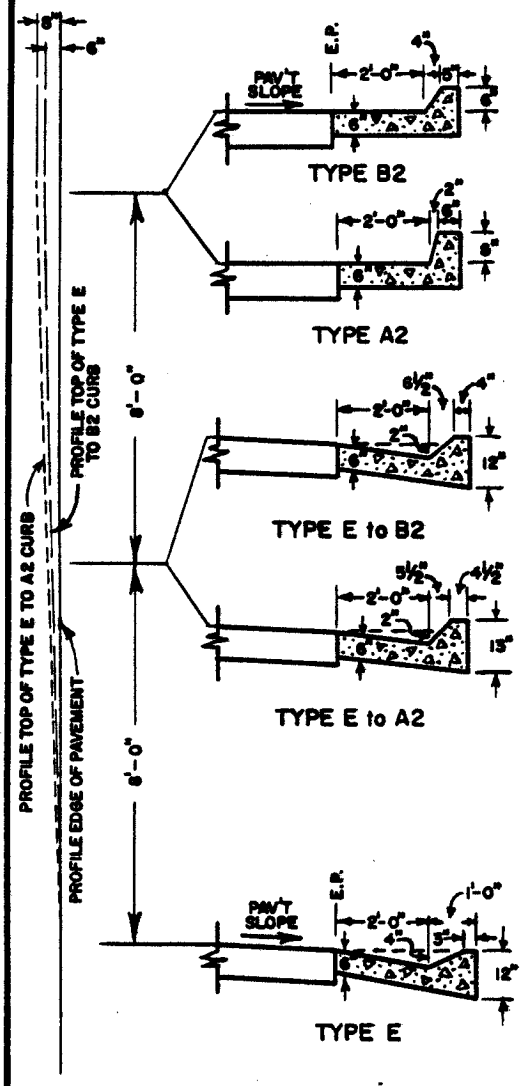

Profile & Section
FROM TYPE E TO TYPE A2 OR B2 CURB

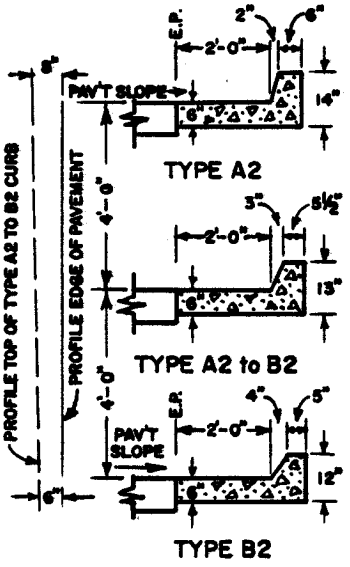

Profile & Section
FROM TYPE A2 TO TYPE B2 CURB

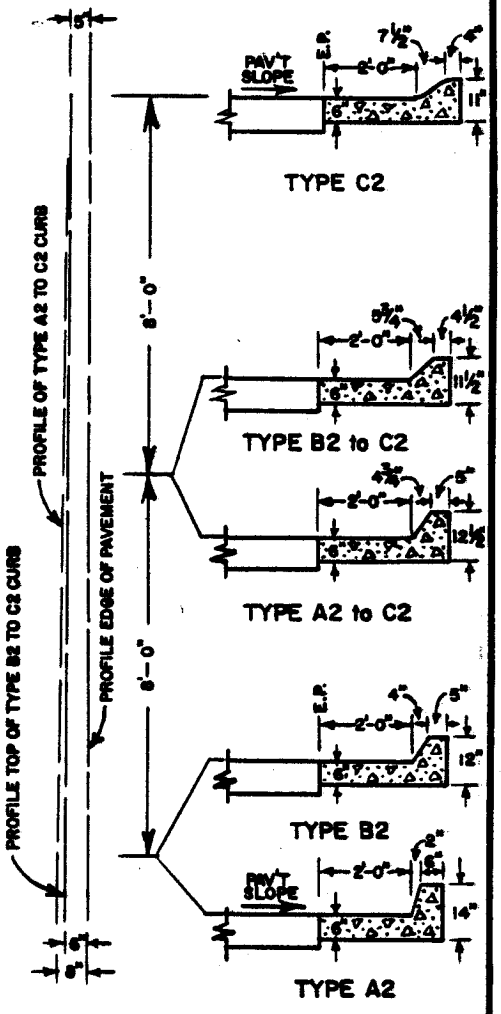

Profile & Section
FROM TYPE A2 OR B2 TO TYPE C2 CURB

No Scale

APPROVED Robert C. Weber DATE 8/3/78
PUBLIC WORKS DIRECTOR - R.C.E. 18793

MARK	REVISIONS	APPR.	DATE

CITY OF RIVERSIDE
PUBLIC WORKS DEPT. - ENGINEERING DIV.

CURB TRANSITIONS

STANDARD DRAWING NO. **210**

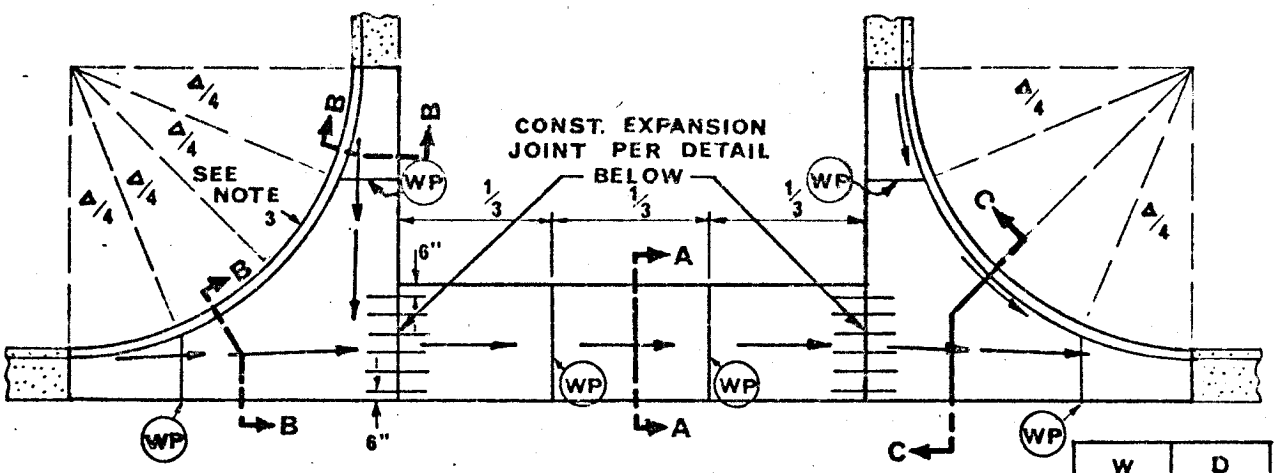

PLAN VIEW

W	D
6'	1"
8'	1¼"
10'	1½"

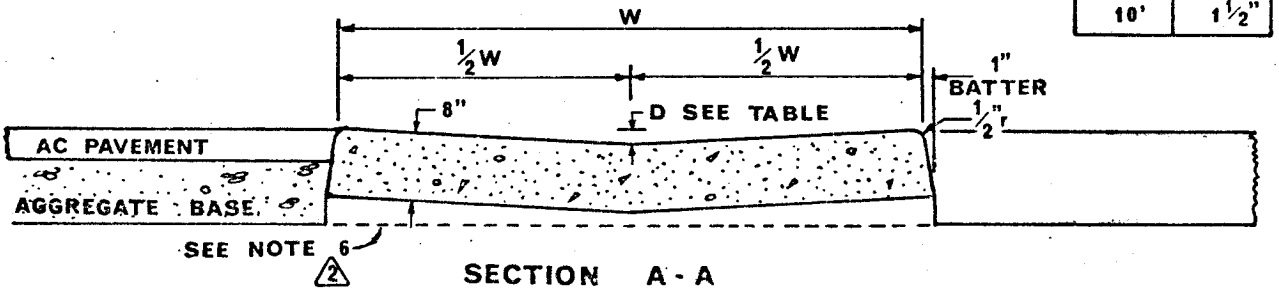

SECTION A - A

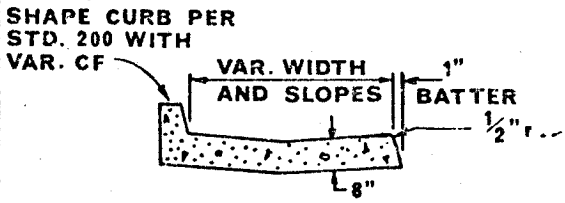

SECTION B - B

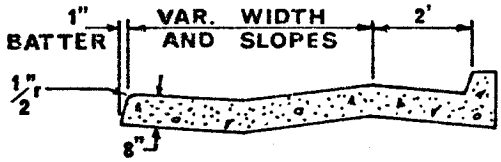

SECTION C - C

NOTES:

1. Concrete shall be class 520-C-2500. (1)
2. W shall be 6' unless otherwise specified.
3. Reduce CF to insure drainage away from FL on upstream curb return
4. Install ½" expansion joints at curb returns.
5. Construct weakened plane joints at locations indicated by (WP).
6. (2) When structural section exceeds 14", the base shall be continued under cross gutter

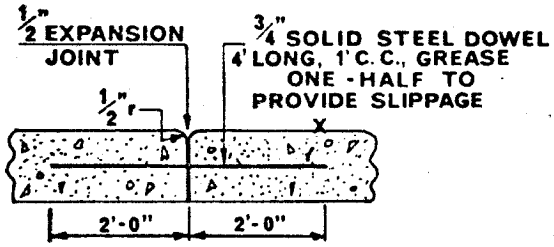

EXPANSION JOINT DETAIL

APPROVED [signature] DATE 1-22-73
PUBLIC WORKS DIRECTOR - R.C.E. 8134

MARK	REVISIONS	APPR.	DATE
1	revised concrete class	[illegible]	7-13-78
2	added note	[illegible]	11-9-82

CITY OF RIVERSIDE

PUBLIC WORKS DEPT. - ENGINEERING DIV.

CROSS GUTTERS

STANDARD DRAWING NO. 220

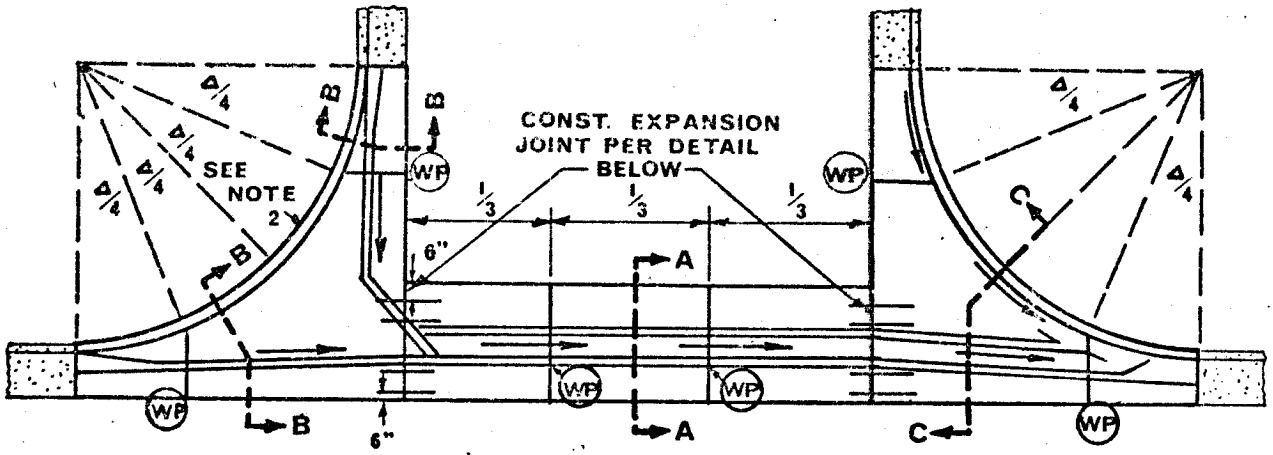

PLAN VIEW

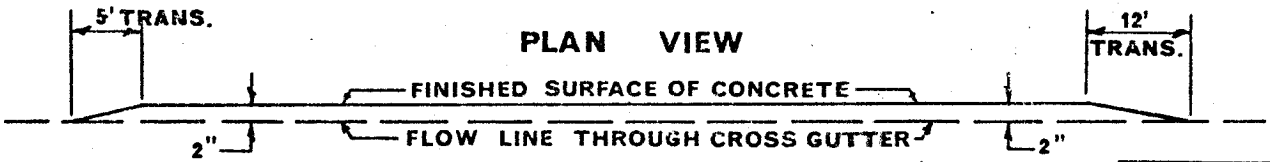

SLOT PROFILE

W	D
6'	3/8"
8'	1/2"
10'	5/8"

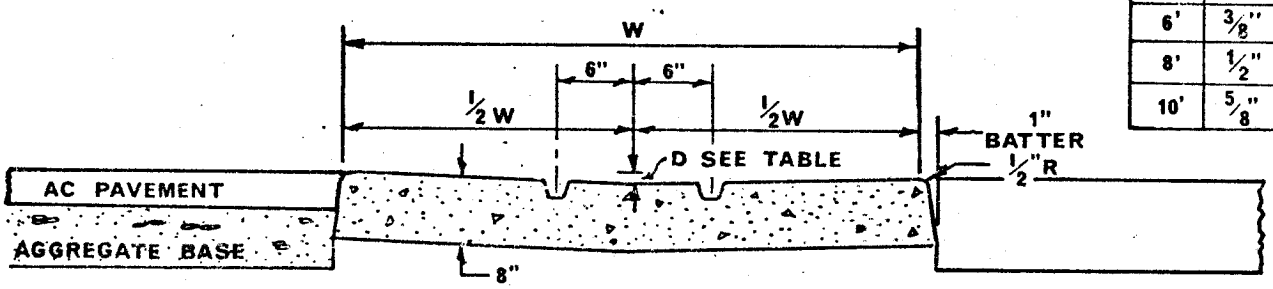

SECTION A-A

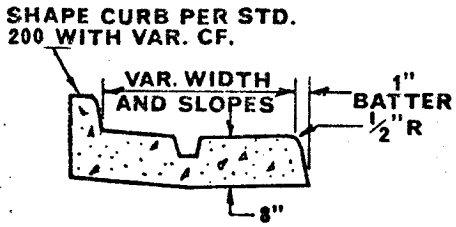

SECTION B-B

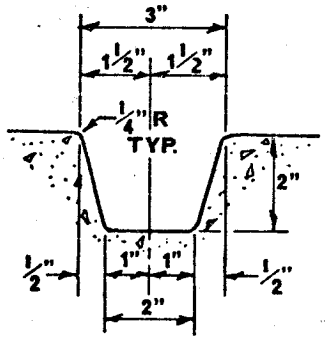

SLOT DETAIL

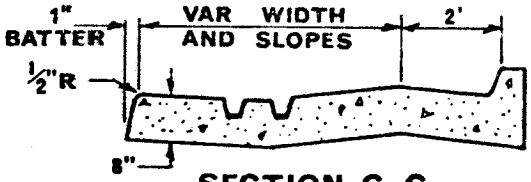

SECTION C-C

NOTES:

1. Concrete shall be class 520-C-2500. (1)
2. Reduce CF to insure drainage away from FL on upstream curb return.
3. W shall be 6' unless otherwise specified.
4. Install 1/2" expansion joints at curb returns.
5. Construct weakened plane joints at locations indicated by (WP).

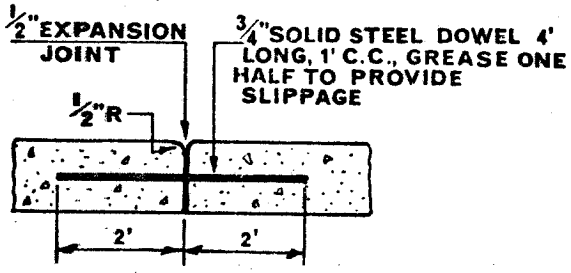

EXPANSION JOINT DETAIL

APPROVED [signature] DATE 1-22-73
PUBLIC WORKS DIRECTOR - R.C.E. 8134

MARK	REVISIONS	APPR.	DATE
(1)	revised concrete class		7-13-78

CITY OF RIVERSIDE
PUBLIC WORKS DEPT. - ENGINEERING DIV.

SLOTTED CROSS GUTTER

STANDARD DRAWING NO. 221

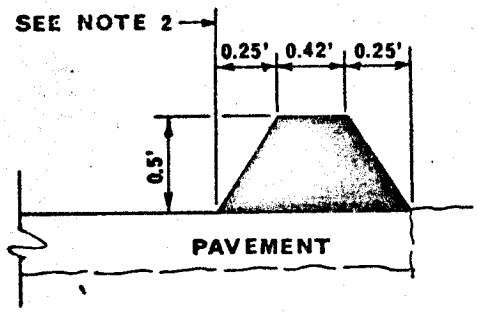

TYPE I - TRAPEZOIDAL

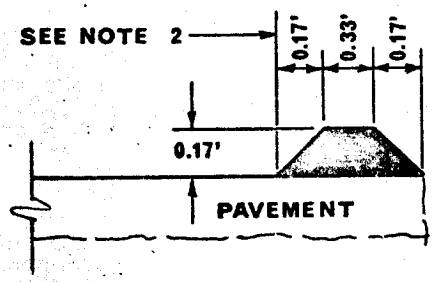

TYPE II - TRAPEZOIDAL

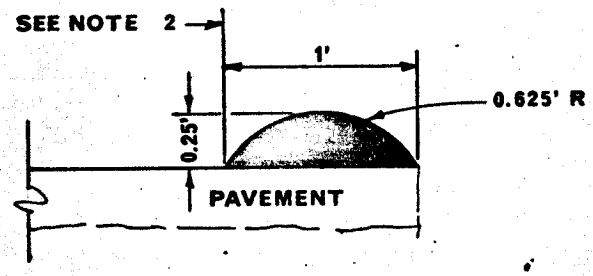

TYPE III - ROLLED

NOTES:

1. Asphalt concrete for berm shall be Class D2-AR-16000 △1 △2
2. Berm location dimensions on plan shall be to this point.
3. The type of berm to be used shall be specified on the plans.

* WITH CITY ENGINEER'S APPROVAL ON SMALL QUANTITIES USE AR-8000 △1

APPROVED _____ DATE 2-14-72
PUBLIC WORKS DIRECTOR - R.C.E. 8134

MARK	REVISIONS	APPR.	DATE
△1	REVISED NOTE		
△2	CHANGED CLASS NAME		

CITY OF RIVERSIDE
PUBLIC WORKS DEPT. - ENGINEERING DIV.

ASPHALT CONCRETE BERMS

STANDARD DRAWING NO. 250

R-I ZONING

1. If sidewalk is sound (no cracks, etc.) and is not to be replaced delete 75 square feet from sidewalk area when issuing a permit for sidewalk and driveway approach.

2. If less than 25 square feet of sidewalk is sound (no cracks, etc.) replace existing sidewalk with 6" sidewalk.

OTHER THAN R-I ZONING

Remove existing sidewalk and replace with 6" sidewalk.

ALL ZONING CONDITIONS

Cross hatched area - area covered by permit if there is no existing sidewalk.

R-I ZONE ONLY

Shaded area - area covered by permit if existing sidewalk is sound.

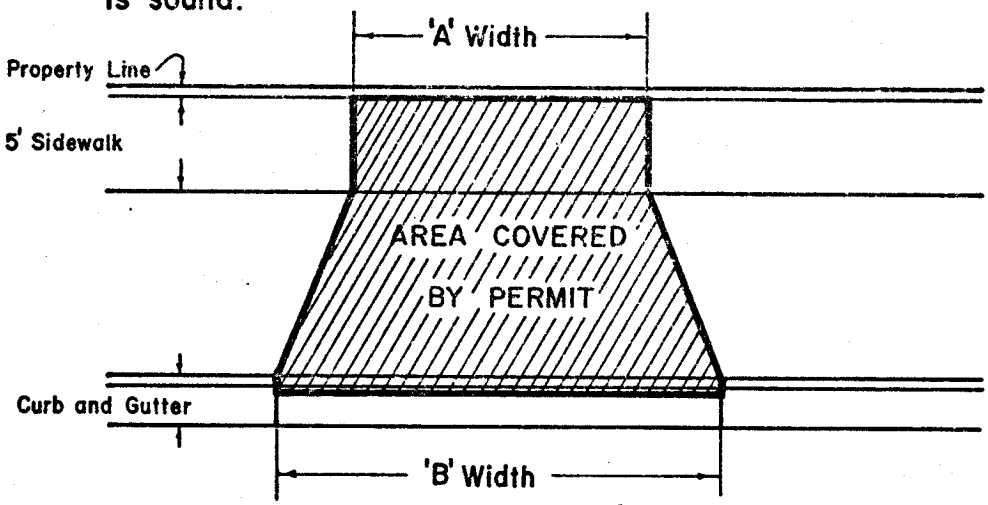

Zone		
Type		
Width	A	B
New S/W	Yes	No

APPROVED BY [signature] DATE 2/24/76
DIRECTOR OF PUBLIC WORKS

REVISIONS

DATE	MARK	BY	

AREA COVERED BY PERMIT FOR DRIVEWAY APPROACH WITH PROPERTY LINE SIDEWALK

CITY OF RIVERSIDE, CALIFORNIA

ENGINEERING DIVISION, DEPT. OF PUBLIC WORKS

STANDARD DRAWING NO. 301

R-I ZONING

Delete 132 Sq. Ft. from sidewalk area when issuing a permit for both sidewalk and driveway approach.

OTHER THAN R-I ZONING

Delete square footage for 'B' width from sidewalk area when issuing a permit for both sidewalk and driveway approach.

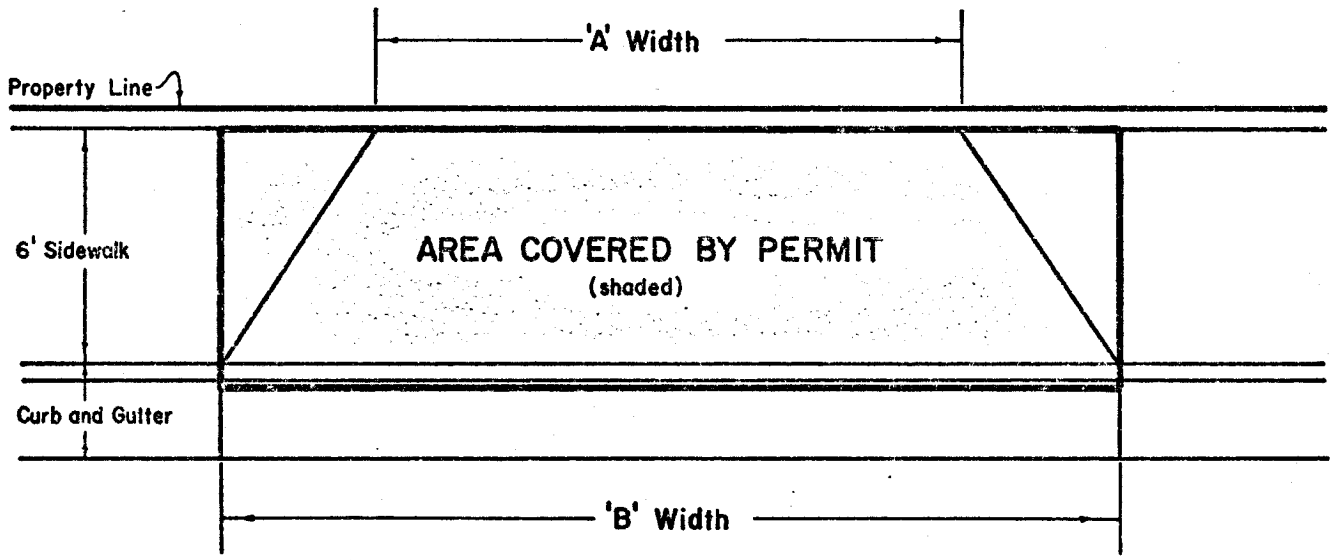

Zone		
Type		
Width	A	B
New S/W	Yes	No

APPROVED _____ DATE _____
DIRECTOR OF PUBLIC WORKS

REVISIONS

DATE	MARK	BY	

AREA COVERED BY PERMIT FOR DRIVEWAY APPROACH WITH CURB SIDEWALK

CITY OF RIVERSIDE, CALIFORNIA

ENGINEERING DIVISION, DEPT. OF PUBLIC WORKS

STANDARD DRAWING NO. 301

DRIVEWAY APPROACH WITH PROPERTY-LINE SIDEWALK

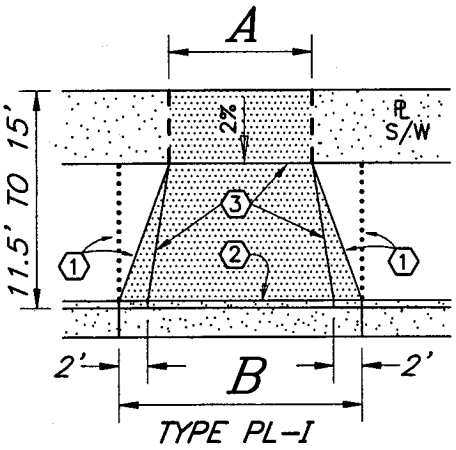

TYPE PL-I

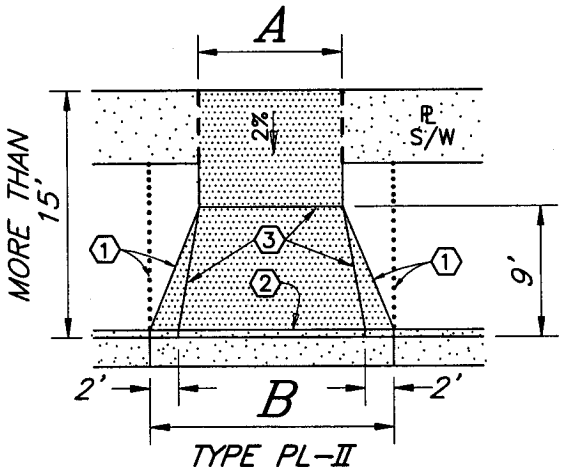

TYPE PL-II

DRIVEWAY APPROACH WITH CURB SIDEWALK

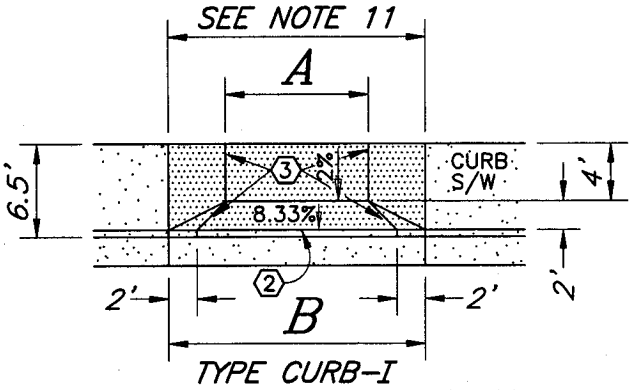

TYPE CURB-I

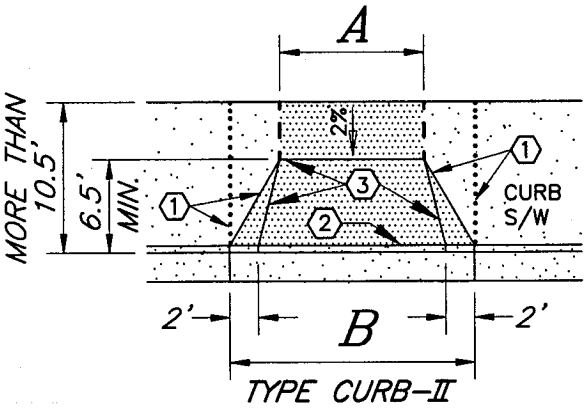

TYPE CURB-II

DRIVEWAY APPROACH WITH NO SIDEWALK

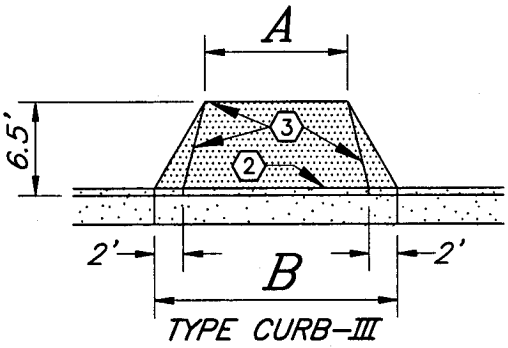

TYPE CURB-III

NOTE: CURB-III REQUIRES APPROVAL BY THE CITY ENGINEER PRIOR TO USE.

CONCRETE IN THE SHADED AREA SHALL BE AT LEAST 6" THICK.

(1) DOTTED LINE SHOWS OPTIONAL DRIVEWAY/SIDEWALK CONFIGURATION. WHEN THE OPTIONAL CONFIGURATION IS CHOSEN, THE ADDITIONAL CONCRETE SHALL BE AT LEAST 6" THICK.

(2) SCORE LINE OR COLD JOINT.

(3) GRADE BREAK LINES SHALL BE PRECISE AND STRAIGHT. SCREEDS AND/OR FALSE FORMS MUST BE USED TO ACHIEVE PRECISE CONSTRUCTION.

APPROVED BY

Thm Boyd

CITY ENGINEER - R.C.E. 36170

4/6/04

DATE

MARK	REVISIONS	APPR.	DATE

CITY OF RIVERSIDE

PUBLIC WORKS DEPARTMENT

DRIVEWAY APPROACH

STANDARD DRAWING NO. 302

Sheet 1 of 3

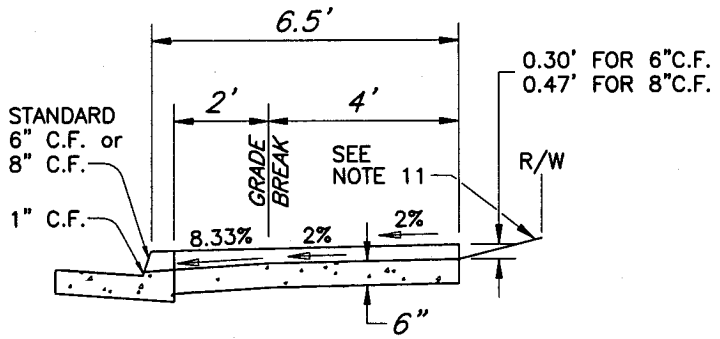

TYPE CURB–I

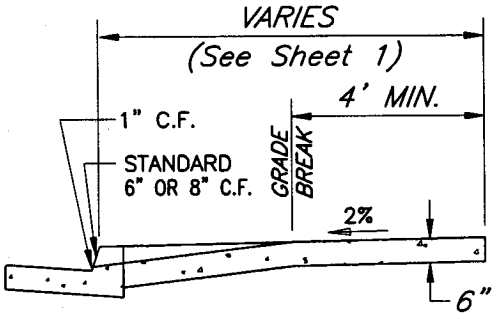

TYPES CURB–II, PL–I & PL–II

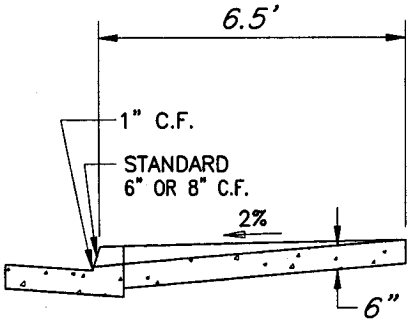

TYPE CURB–III

TYPICAL SECTIONS

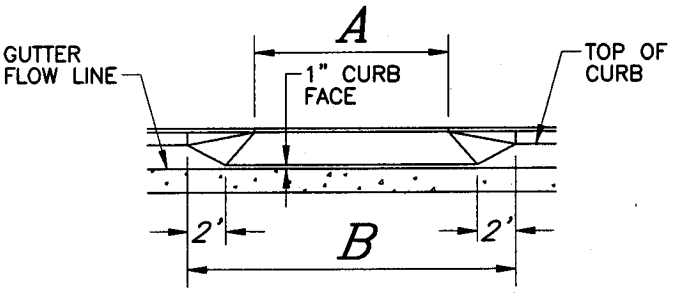

ELEVATION

DRIVEWAY APPROACH DIMENSIONS				
LAND USE AND DRIVEWAY TYPE		A	B	B*
RESIDENTIAL (SINGLE OR DUPLEX)	SINGLE GARAGE	10'(MIN.)	(A+7')	A+14'
	DOUBLE GARAGE	20'(MAX.)		
	TRIPLE GARAGE	28'		
COMMERCIAL OR APARTMENT		30'	A+14'	A+18'
COMMERCIAL (JOINT)		36'		

* USE THIS "B" DIMENSION WHEN THE DRIVEWAY APPROACH IS ON A MAJOR STREET OR WHEN A DRIVING LANE IS ADJACENT TO THE CURB.

△1

APPROVED BY

Tim Boyd 4/6/04

CITY ENGINEER – R.C.E. 36170 DATE

MARK	REVISIONS	APPR.	DATE
△1	Removed * * NOTE	TJB	5/10/04

CITY OF RIVERSIDE

PUBLIC WORKS DEPARTMENT

DRIVEWAY APPROACH

STANDARD DRAWING NO. 302

Sheet 2 of 3

NOTES

1. A CONSTRUCTION PERMIT IS REQUIRED PRIOR TO CONSTRUCTION OF A DRIVEWAY APPROACH. AS A PREREQUISITE TO THE CONSTRUCTION PERMIT, THE PERMITTEE SHALL SUBMIT FOR REVIEW AND APPROVAL OF THE CITY ENGINEER, A DETAILED PLOT PLAN SHOWING THE LOCATION OF THE PROPERTY TO BE SERVED BY THE DIVEWAY APPROACH, THE STREET RIGHT-OF-WAY, THE PROPERTY LINES, THE EXISTING AND PROPOSED GARAGES, DRIVEWAY, CURB AND GUTTERS, SIDEWALKS, TREES, FIRE HYDRANTS, UTILITY VAULTS AND POLES AND OTHER IMPROVEMENTS WHICH MAY BE AFFECTED BY THE PROPOSED CONSTRUCTION. THE PLOT PLAN SHALL SPECIFY THE TYPE AND LOCATION OF THE PROPOSED DRIVEWAY APPROACH WITH ITS DIMENSIONS "A" AND "B".

2. A DRIVEWAY APPROACH REQUIRING RELOCATION OR REMOVAL OF TREES, POLES, UTILITIES OR OTHER APPURTENANCES SHALL BE APPROVED BY THE AFFECTED UTILITY COMPANY AND/OR CITY DEPARTMENTS PRIOR TO ISSUANCE OF THE CONSTRUCTION PERMIT. ALL SUCH WORK SHALL BE DONE AT THE EXPENSE OF THE PERMITTEE.

3. NO PORTION OF A DRIVEWAY APPROACH SHALL BE LOCATED WITHIN A CURB RETURN.

4. ANY UNUSED DRIVEWAY OPENINGS SERVING THE PROPERTY ON WHICH A NEW DRIVEWAY IS BEING BUILT, SHALL BE CLOSED WITH FULL HEIGHT CURB; SEE STD. DWG. 303 FOR REMOVAL OF CURB ONLY.

5. THE EDGE OF THE DRIVEWAY APPROACH AT THE CURB SHALL BE AT LEAST 5' FROM THE EXTENSION OF THE NEAREST PROPERTY LINE AT THE CURB.

6. WHEN A JOINT DRIVEWAY APPROACH IS PERMITTED, A RECORDED EASEMENT ALLOWING FOR MUTUAL ACCESS ON THE ADJOINING PROPERTIES IS REQUIRED.

7. CONCRETE SHALL BE CLASS 520-C-2500.

8. A CONSTRUCTION JOINT OR A WEAKEND PLANE JOINT SHALL BE INSTALLED BETWEEN THE DRIVEWAY APPROACH AND THE ADJACENT SIDEWALK AND DRIVEWAY.

9. A WEAKENED PLANE JOINT SHALL BE CONSTRUCTED THROUGH THE CENTER OF THE DRIVEWAY APPROACH WHEN "A" EXCEEDS 15'.

10. WHEN A DRIVEWAY APPROACH IS TO JOIN AN ALLEY, THE DRIVEWAY APPROACH AND THE ALLEY SHALL BE CONSTRUCTED TO ALLOW FOR PROPER DRAINAGE.

11. FOR TYPE CURB-I, A POSITIVE SLOPE BEYOND THE DRIVEWAY APPROACH AS WELL AS TRANSITION CURBS BEHIND THE SIDEWALK AND ADJACENT TO THE DRIVEWAY MAY BE REQUIRED TO CONTAIN 100-YEAR STORM RUNOFF WITHIN THE RIGHT-OF-WAY.

12. WHEN DRIVEWAY APPROACH IS TO BE USED AS A MIDBLOCK WHEELCHAIR RAMP USE STANDARD DRAWING 304, TYPE VII.

FOR ANY VARIATION FROM THIS STANDARD, APPROVAL MUST BE OBTAINED FROM THE CITY ENGINEER.

APPROVED BY

Tim Boyd — 4/6/04

CITY ENGINEER – R.C.E. 36170 — DATE

MARK	REVISIONS	APPR.	DATE

CITY OF RIVERSIDE

PUBLIC WORKS DEPARTMENT

DRIVEWAY APPROACH

STANDARD DRAWING NO. 302

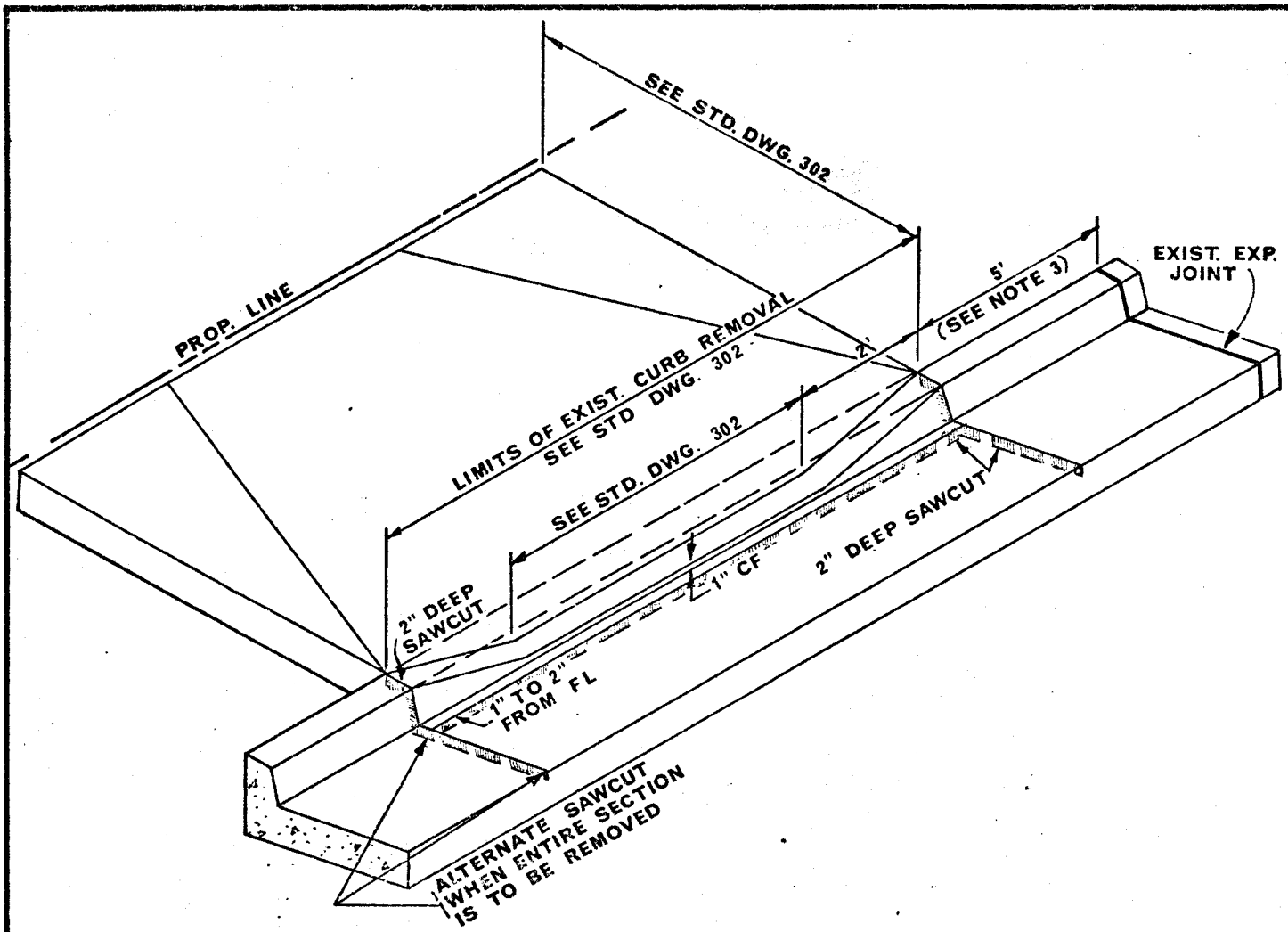

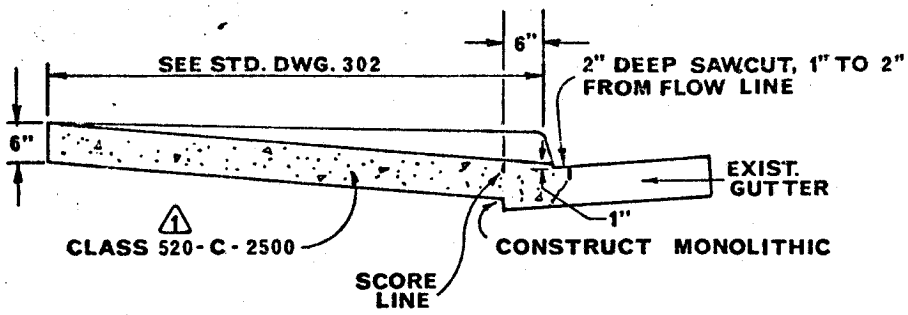

NOTES

1. Contractor is responsible for repair of adjacent curb and gutter if broken due to his operations.

2. If sawcut does not comply with this standard, contractor shall remove and replace entire curb and gutter and sufficient asphalt to accommodate the forms.

2 3. If removal of entire curb and gutter is required, remove to nearest expansion joint if less than five (5) feet from beginning of driveway. Any gutter section which is cracked at a point that leaves less than five (5) feet to the nearest expansion joint shall be removed and replaced.

APPROVED _____ DATE _____
PUBLIC WORKS DIRECTOR - R.C.E. 8134

MARK	REVISIONS	APPR.	DATE
1	revised concrete class		7-13-78
2	revised note 3		8-2-78

CITY OF RIVERSIDE

PUBLIC WORKS DEPT. - ENGINEERING DIV.

DRIVEWAY & CURB DEPRESSION

EXISTING CURB & GUTTER

STANDARD DRAWING NO. 303

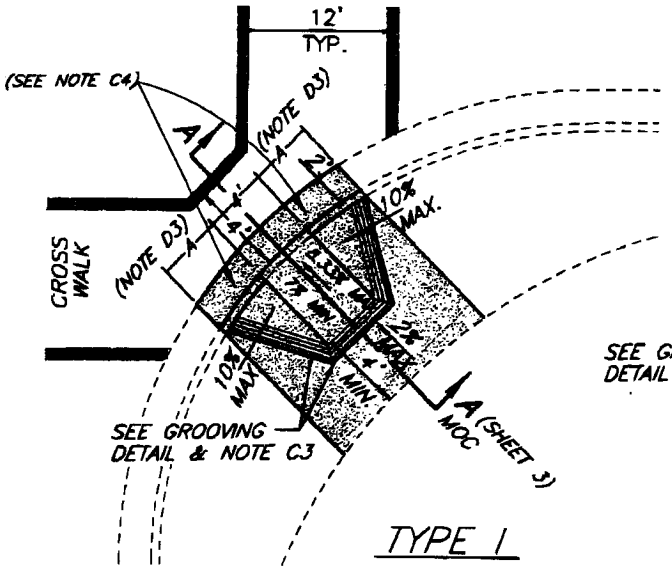

TYPE I

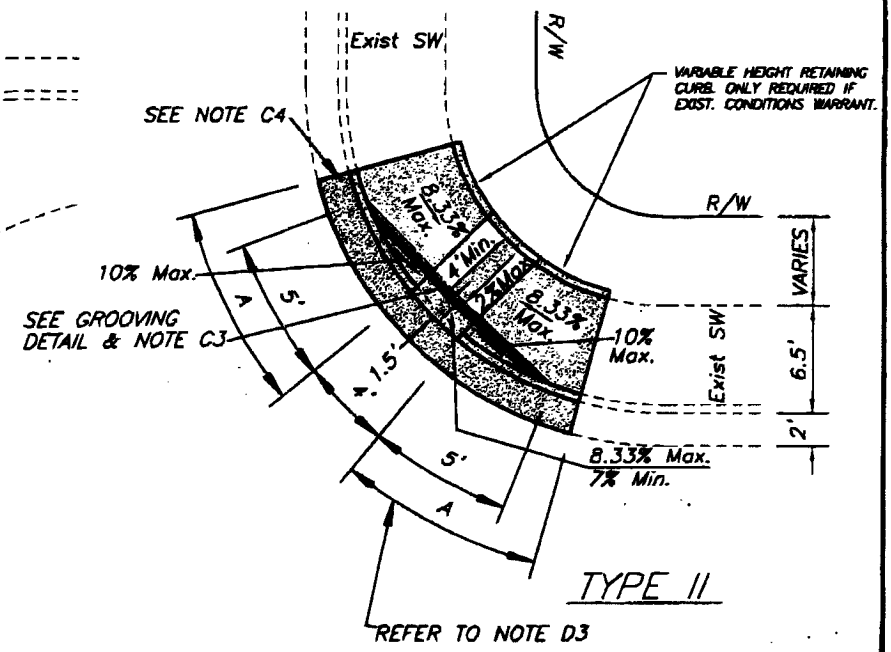

TYPE II

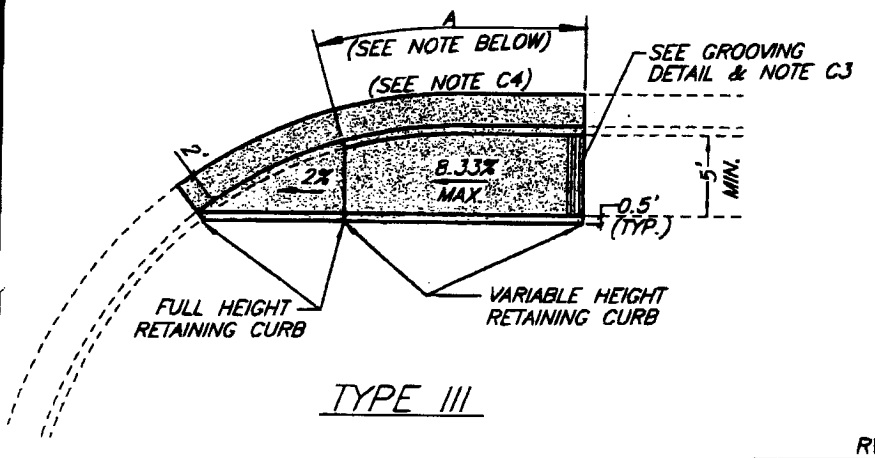

TYPE III

NOTE:
The "A" dimension shall be adjusted to meet the slope requirements as shown on this plan.

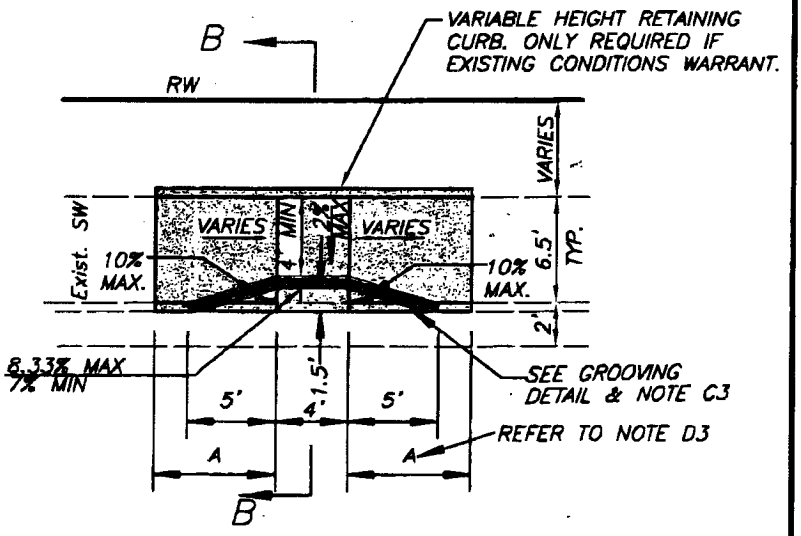

TYPE II-A – @ MID BLOCK
W/ CURB SIDE SW

APPROVED Kim Boyd DATE 3/2/04
CITY ENGINEER – R.C.E. 36170

CITY OF RIVERSIDE
PUBLIC WORKS DEPARTMENT – ENGINEERING DIVISION

WHEELCHAIR RAMP

STANDARD DRAWING NO. 304 Sheet 1 of 4

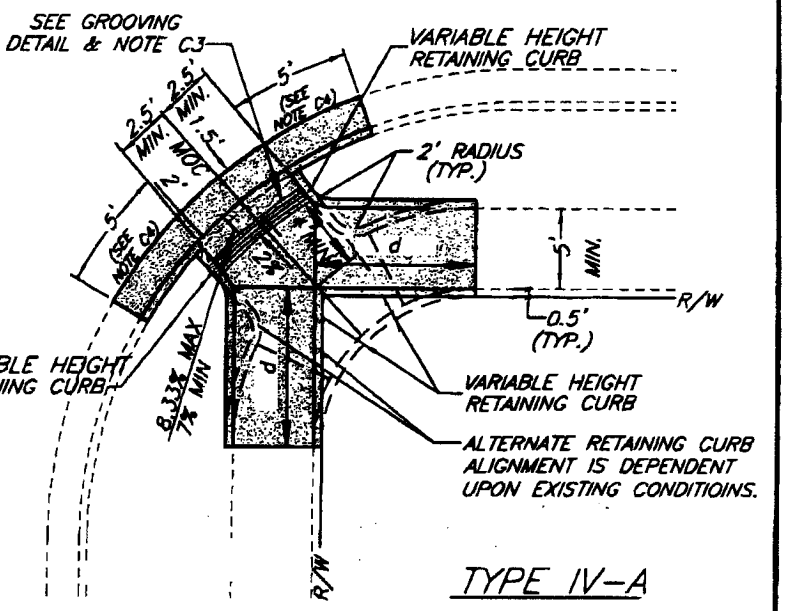

TYPE IV-A

NOTE:
5'≤d≤10' OR 10% MAX

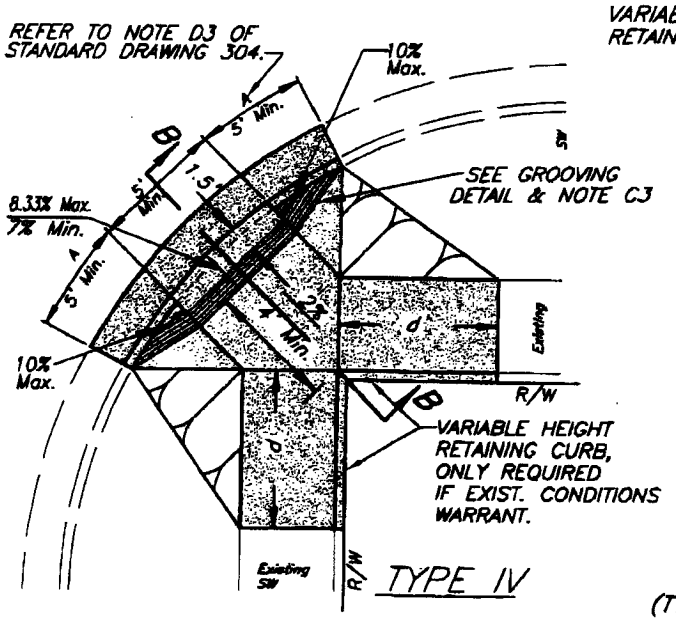

TYPE IV

NOTE:
5'≤d≤10' OR 10% MAX

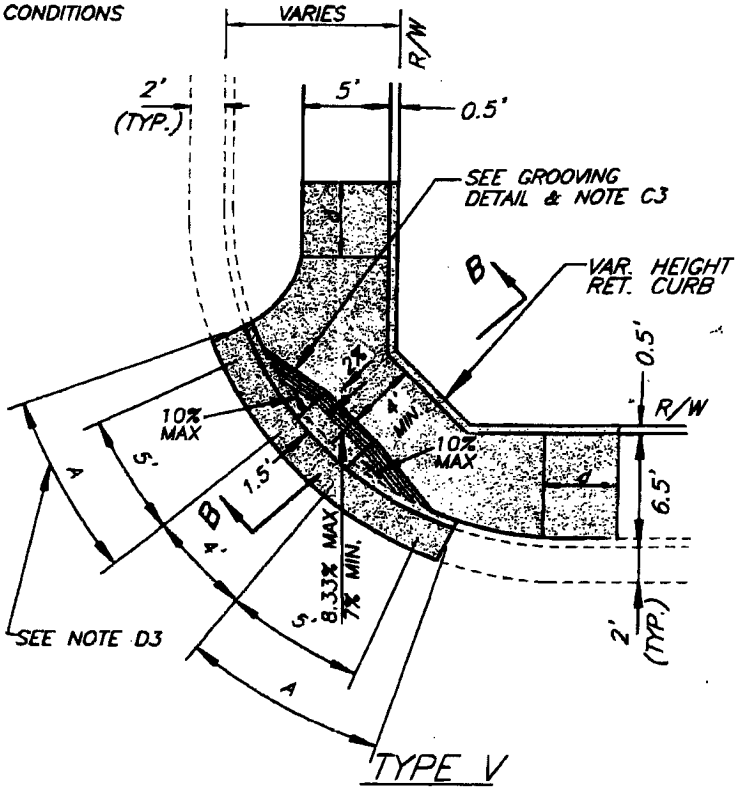

TYPE V

APPROVED Thom Bird DATE 3/2/04
CITY ENGINEER - R.C.E. 36170

CITY OF RIVERSIDE
PUBLIC WORKS DEPARTMENT - ENGINEERING DIVISION

WHEELCHAIR RAMP

STANDARD DRAWING NO. 304 Sheet 2 of 4

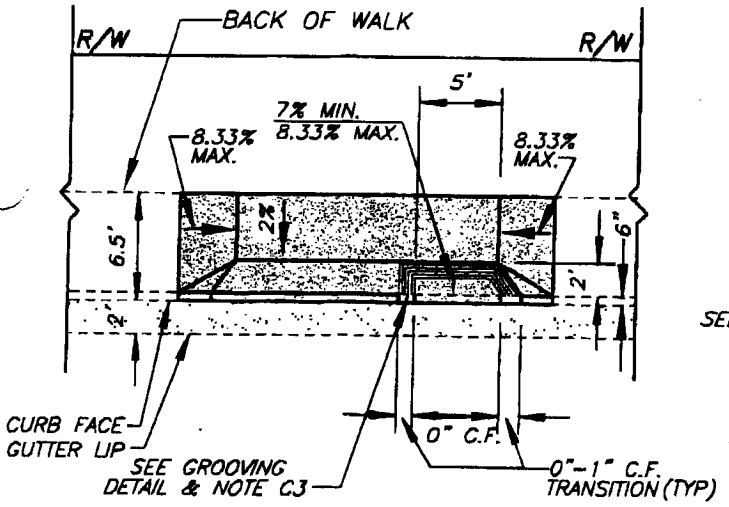

TYPE VII- @ MID BLOCK DWY
W/CURB SIDE SW
(REFER TO STD. DWG. 302 FOR DWY)

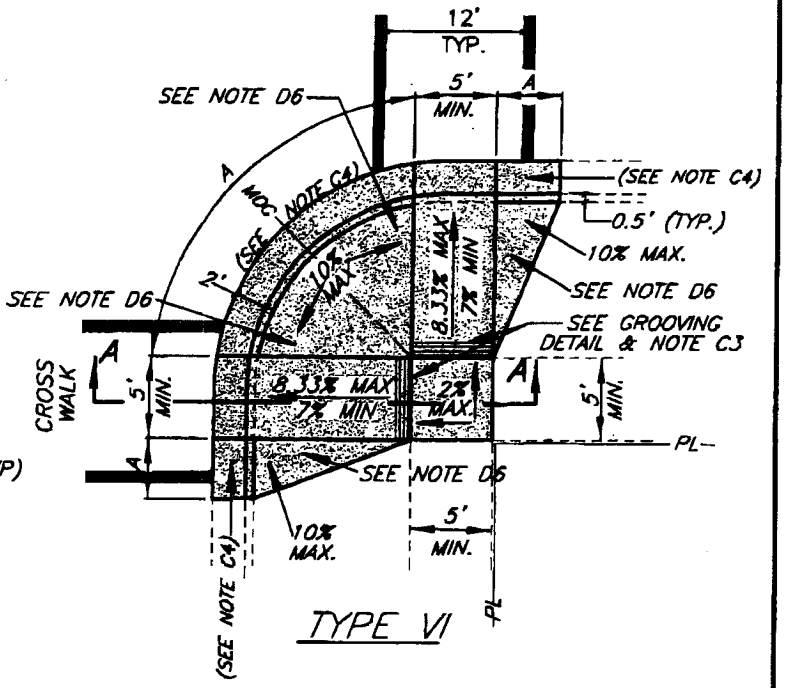

TYPE VI

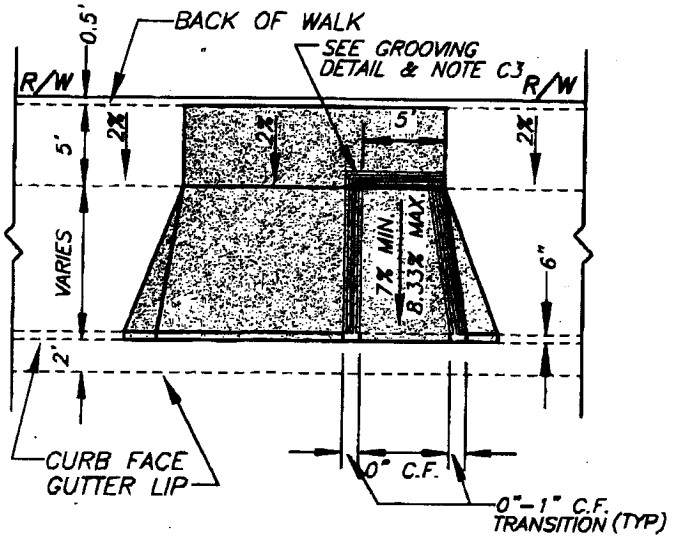

TYPE VII- @ MID BLOCK DWY
W/PROPERTY LINE SW
(REFER TO STD. DWG. 302 FOR DWY)

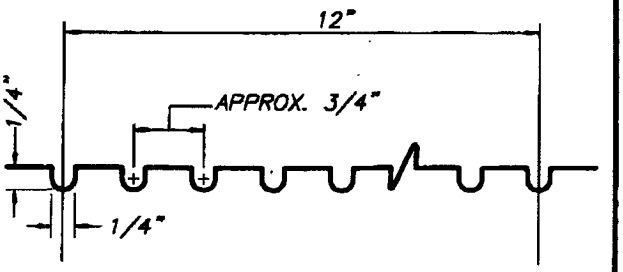

GROOVING DETAIL

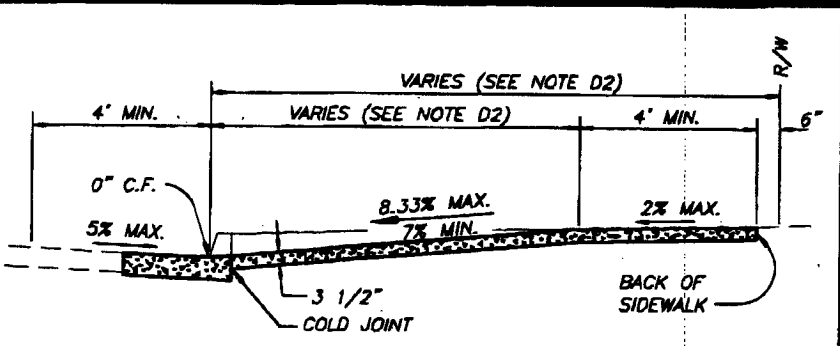

SECTION A-A

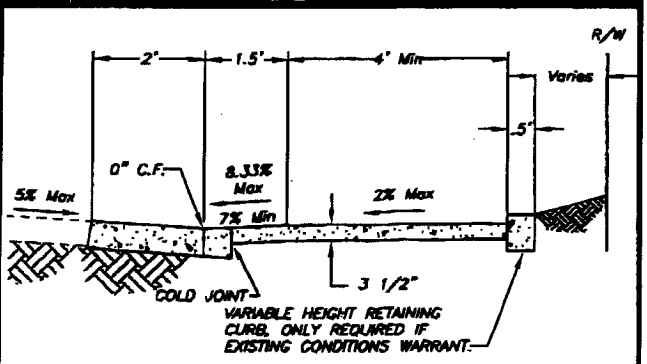

SECTION B-B

APPROVED Thom Boyd DATE 3/2/04
CITY ENGINEER - R.C.E. 36170

CITY OF RIVERSIDE
PUBLIC WORKS DEPARTMENT - ENGINEERING DIVISION

WHEELCHAIR RAMP

STANDARD DRAWING NO. 304 Sheet 3 of 4

NOTES:

CONSTRUCTION NOTES:

C1. Concrete shall be per current edition of the "Standard Specifications for Public Works Construction." (520-C-2500)

C2. The wheelchair ramp shall be poured monolithically with the adjacent sidewalk, following the requirements specified on sheet 1.

C3. The ramp shall have a 12" wide border with 1/4" grooves approximately 3/4" O.C. See grooving detail, sheet 2. The surface of the ramp shall have a transverse broomed surface texture rougher than the surrounding sidewalk.

C4. Gutter cross slope shall be transitioned from the standard or existing at the full height curb through the 'A' distance to 5% at the bottom of the wheelchair ramp where the curb face is 0" in height.

C5. Typical crosswalk shall be aligned with the ramp at the M.O.C. as shown (TYPE I). Or as shown centered on directional ramp (TYPE VI) .

DESIGN NOTES:

D1. Type I ramp shall be used for all new construction or wherever existing conditions permit. Ramp types II through V are to be used wherever existing conditions restrict the use of a type I ramp. Variable height retaining curb shall be used only adjacent to non-traversible areas.

D2. Wheelchair ramp length(s) shall be adjusted to meet the slope requirements as shown on this plan.

D3. "A" dimension shall be adjusted to meet the slope requirements as shown on this plan, except the ramp must not extend beyond the end of the curb return.

D4. Wheelchair ramps shall be required in each quadrant or corner of an intersection and at midblock locations on streets opposite "T" intersections.

D5. Wheelchair ramps in mid-block (at "T" intersections) shall be placed in line with ramps on the opposite side of the street. If no opening is provided in a median (on divided streets), the ramps shall be omitted in the mid-block location.

D6. Where the gutter can be raised to the top of the curb (no drainage in the return area because of catch basins or high point in grade) the wheelchair ramp may be eliminated by raising the gutter grade and decreasing the curb face to 0". The 12" wide border as described in note C3 shall be placed along the back of curb through the width of the 0" curb face.

D7. Wheelchair ramps shall be located as shown on Sheets 1 & 2 except under the following conditions:

(a) When location conflicts with existing storm drain, traffic signal or utility facilities, the wheelchair ramp shall be relocated to an appropriate position within or adjacent to the curb return area as approved by the City Engineer. However, if the ramp cannot be positioned in a safe location the conflicting facility is to be relocated.

(b) When the wheelchair ramp is to be constructed in a return that is downstream of a cross gutter and the wheelchair ramp may cause a drainage problem, the wheelchair ramp shall be relocated to an appropriate area downstream of the M.O.C.

(c) In existing curb returns with right-of-way limitations, the wheelchair ramp shall be located within the curb return area where the right-of-way width is sufficient.

D8. Wheelchair ramp wings or retaining curbs:

(a) Where adjacent areas are paved, wheelchair ramp wings (10% slope) shall be installed.

(b) Where adjacent areas are landscaped or ramp construction is adjacent to existing facilities (as listed in D7-a) variable height retaining curb shall be installed.

D9. The wheelchair ramp must be located to be aligned completely within a striped crosswalk.

APPROVED Thm Byd DATE 3/2/04
CITY ENGINEER - R.C.E. 38170

MARK	REVISIONS	APPR.	DATE

CITY OF RIVERSIDE
PUBLIC WORKS DEPARTMENT - ENGINEERING DIVISION

WHEELCHAIR RAMP

STANDARD DRAWING NO. **304** Sheet 4 of 4

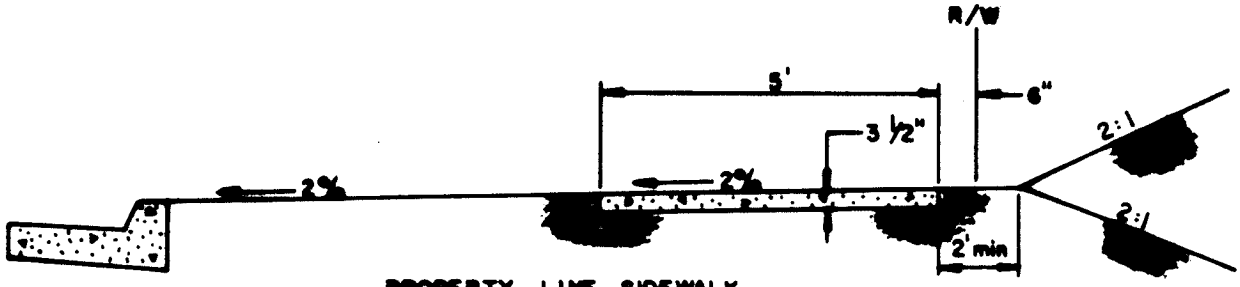

PROPERTY LINE SIDEWALK

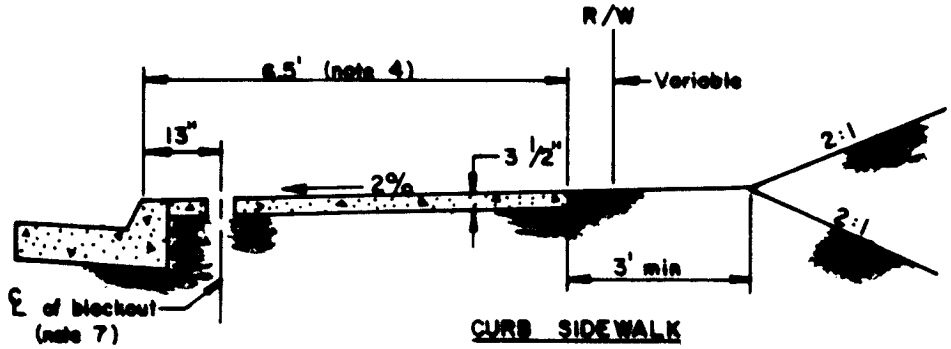

CURB SIDEWALK

TYPICAL SECTIONS

NOTES:

1. Concrete shall be per current Edition of the "Standard Specifications for Public Works Construction."
2. Half inch thick transverse expansion joints shall be installed at all curb returns Quarter inch thick expansion joints shall be installed between the sidewalk and the back of curb at curb returns and around drainage structures, poles, and pipes which are in the sidewalk. Curb sidewalks shall have the expansion joints at the same location as those in the curb.
3. Weakened plane joints shall be constructed at 10 foot maximum intervals throughout the length of the sidewalk and at locations where the sidewalk section is interrupted by treewells. utility vaults, blockouts for street lights and similar objects.
4. A sidewalk wider than 6.5 feet may be required in commercial areas and areas with high pedestrian traffic.
5. For typical curb return sidewalk see Standard Drawing no 120.
6. When a street light standard is to be placed in the sidewalk, block out a three foot square around the standard and bring the street light foundation to grade after the standard is plumb.
7. In residential areas 6"X6" or 6" diameter blockouts for mailboxes are required in curb sidewalk 13" from curb face at the property line between adjacent residences. For mailboxes for business, mobilehome parks or apartment houses, developer to check with the U.S.P.S. for the number and location of mailboxes.
8. 4 feet width of sidewalk is the minimum width between edge of sidewalk and any objects that interfere with pedestrian R/W (tree wells, fire hydrants, etc.).

BLD

APPROVED [signature] DATE 9/24/87
PUBLIC WORKS DIRECTOR - R.C.E. 18793

MARK	REVISIONS	APPR.	DATE

CITY OF RIVERSIDE
PUBLIC WORKS DEPT. - ENGINEERING DIV.

SIDEWALK

STANDARD DRAWING NO. 325

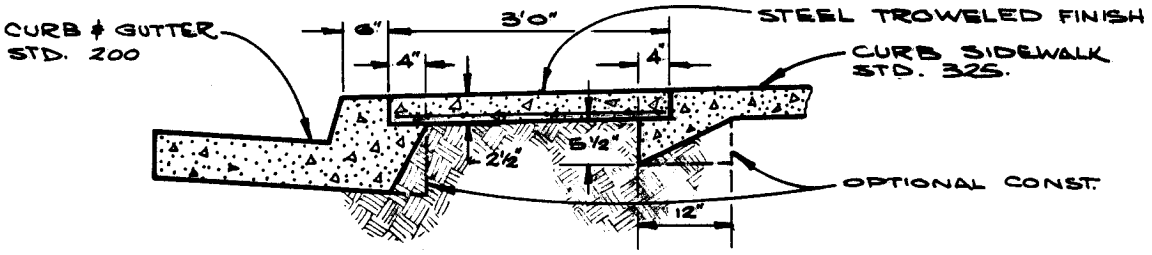

SECTION A-A
NEW CURB GUTTER AND SIDEWALK

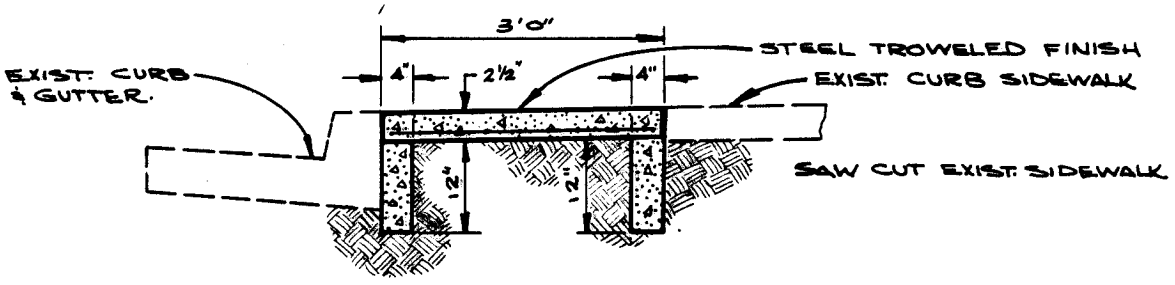

SECTION A-A
EXIST. CURB GUTTER AND SIDEWALK
SCALE 1" = 2'

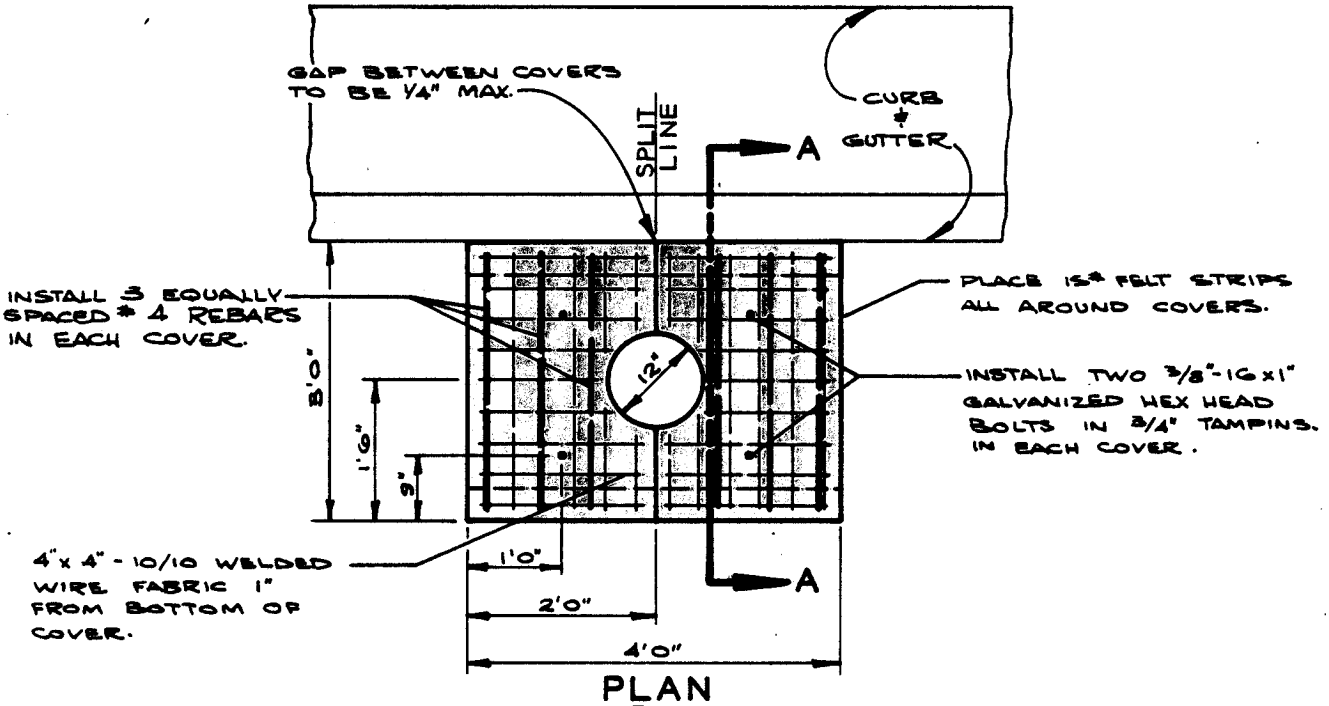

PLAN
SCALE 1" = 2'

1. CONCRETE IN COVERS SHALL BE CLASS 560-D-3250.
2. COVERS SHALL BE 2½" THICK.
3. COVERS SHALL BE CAST IN PLACE.

APPROVED Robert P. Wales DATE 8/3/78
PUBLIC WORKS DIRECTOR - R.C.E. 18793

MARK	REVISIONS	APPR.	DATE

CITY OF RIVERSIDE
PUBLIC WORKS DEPT. - ENGINEERING DIV.

TREE WELL AND COVERS

STANDARD DRAWING NO. **326**

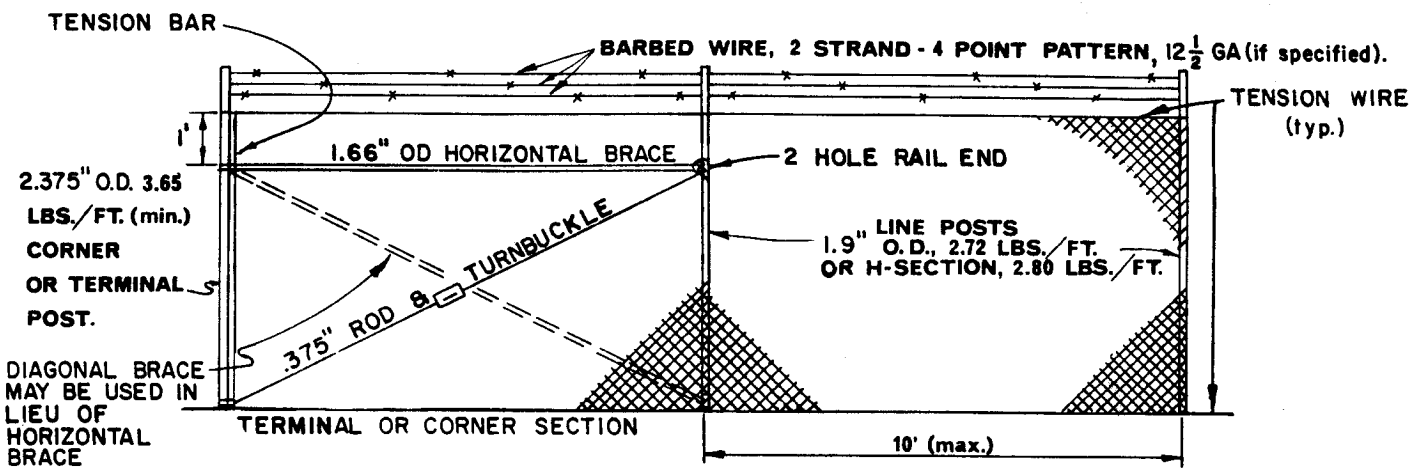

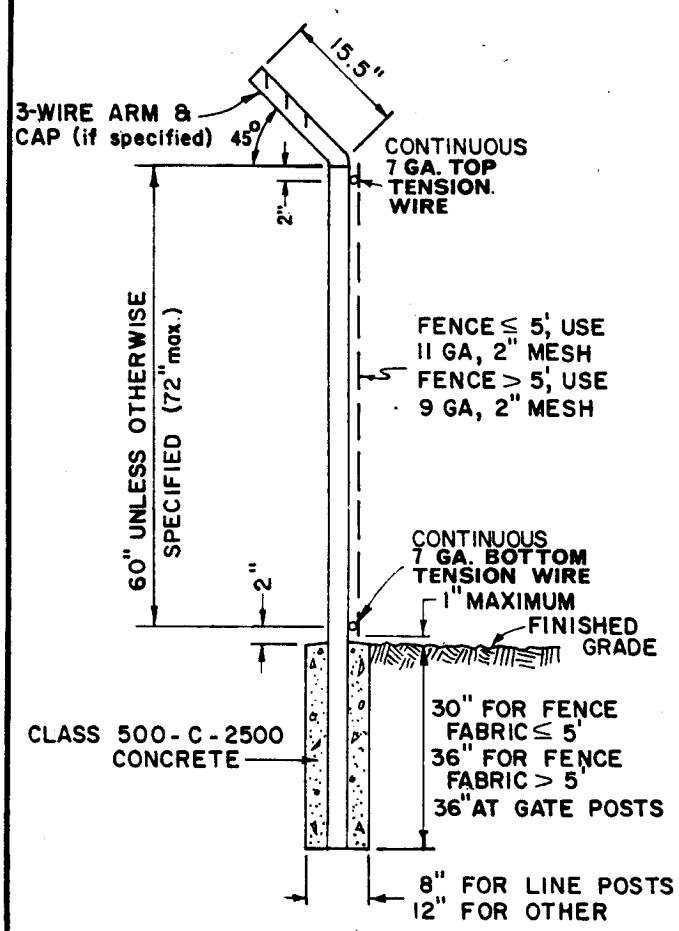

POST DETAIL

NOTES

1. All parts of the fence to be galvanized per Std Specifications for Public Works Construction.
2. Corner posts, 1.625" braces, and .375" rods and turnbuckle to be installed at corners of 30° deflection or greater.
3. Line posts to be double braced and turnbuckled every 500' in straight sections of fence. (See sheet 2 of 2)
4. Braces to be 1.25" pipe, 2.27 lbs/ft. - extending from corner, gate, or terminal posts to first adjacent line post, and securely fastened to posts with pressed steel connections, then trussed with .375" diameter round rod and turnbuckled.
5. Top and bottom tension wires to be securely fastened to all posts and tied to fabric at 24" spaces
6. The ground surface shall be filled and compacted to within 1" of bottom of fabric
7. Mesh fabric to be tied per Std Specifications for Public Works Construction.
8. Line posts to have 45° arm and cap carrying 3 strands of galvanized barbed wire of 4 point pattern, each composed of 2 strands of 12 1/2 GA wire if required
9. For repair of damaged zinc coatings, see Std. Specifications for Public Works Construction.
10. **When constructing a double gate, use horozontal braces on each side of the gates.**
11. **Top and bottom tension wires shall be fastened securely and terminated to line posts at each 500' bracing interval.**

APPROVED Robert C. Wales DATE 7/4/78
PUBLIC WORKS DIRECTOR - R.C.E. 18793

MARK	REVISIONS	APPR.	DATE
1	REVISED PER 1982 GREEN BOOK	RW	12/1/82
2	REVISED BRACING; ADDED SHT 2	RW	4/2/84

CITY OF RIVERSIDE
PUBLIC WORKS DEPT. - ENGINEERING DIV.

CHAIN LINK FENCE
(FOR FENCES UP TO 72" HIGH)

STANDARD DRAWING NO. **380**
Sheet 1 of 2

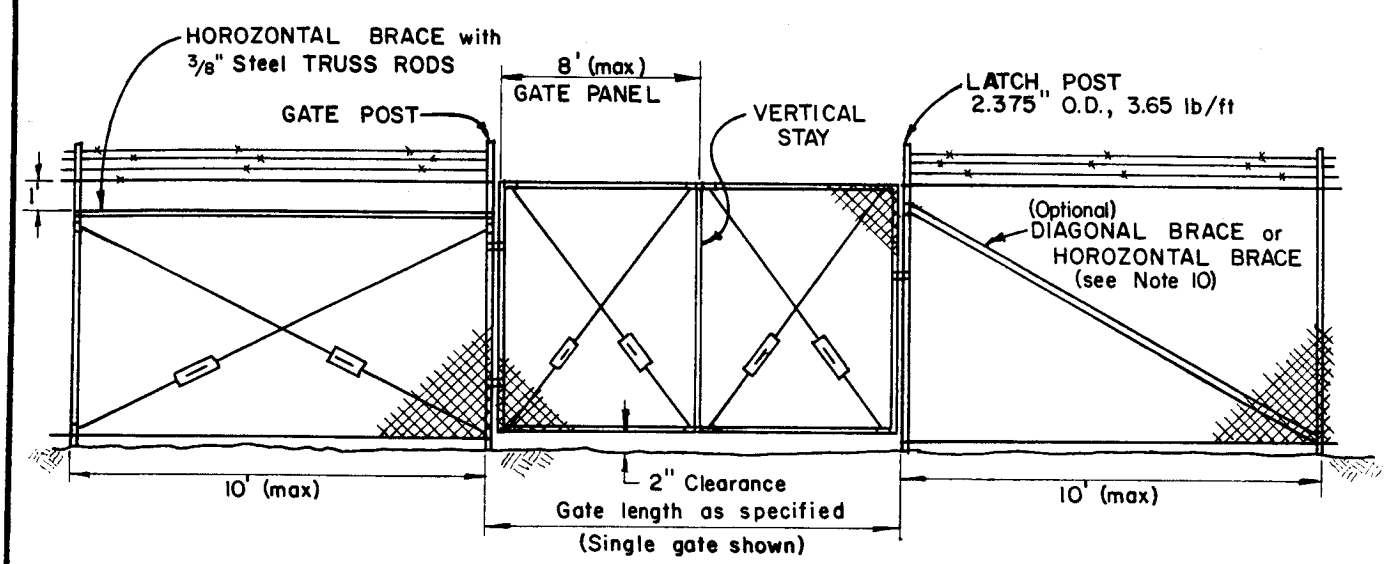

GATE DETAIL

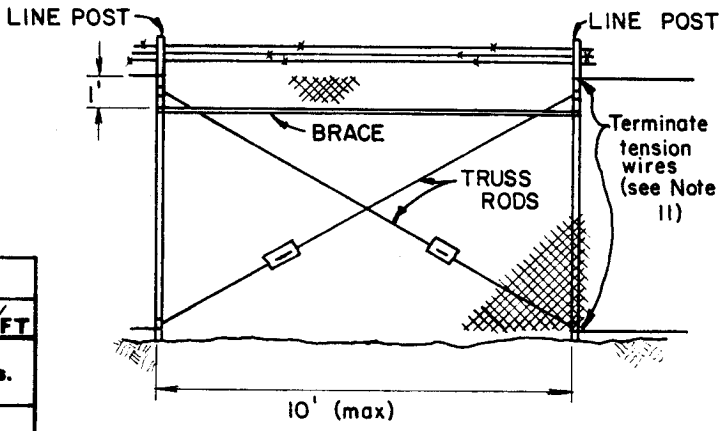

Line posts at 500' maximum intervals, braced and trussed in both directions. See Note 11 for tension wire termination.

LINE POST BRACING DETAIL

GATES			
FRAME	OPENING	POST O.D.	POST WT/FT
1.9" O.D.	SINGLE TO 6' OR DBL. TO 12' INCL.	2.375"	3.65 lbs.
1.9" O.D.	SGL., OVER 6' TO 13' OR DOUBLE, OVER 12' TO 26' INCL.	4.000"	9.11 lbs.
1.9" O.D.	SINGLE, OVER 13' TO 18' OR DBL., OVER 26' TO 36' INCL.	6.625"	18.97 lbs.
1.9" O.D.	SGL., OVER 18' OR DOUBLE, OVER 36'	8.625"	24.70 lbs.

NOTE: Above dimensions and weights are minimum. Larger sizes may be used on approval of engineer.

BLD

APPROVED [signature] DATE 12/27/84
PUBLIC WORKS DIRECTOR - R.C.E. 18793

MARK	REVISIONS	APPR.	DATE

CITY OF RIVERSIDE
PUBLIC WORKS DEPT. - ENGINEERING DIV.

CHAIN LINK FENCE
(FOR FENCES UP TO 7' HIGH)

STANDARD DRAWING NO. **380**

Sheet 2 of 2

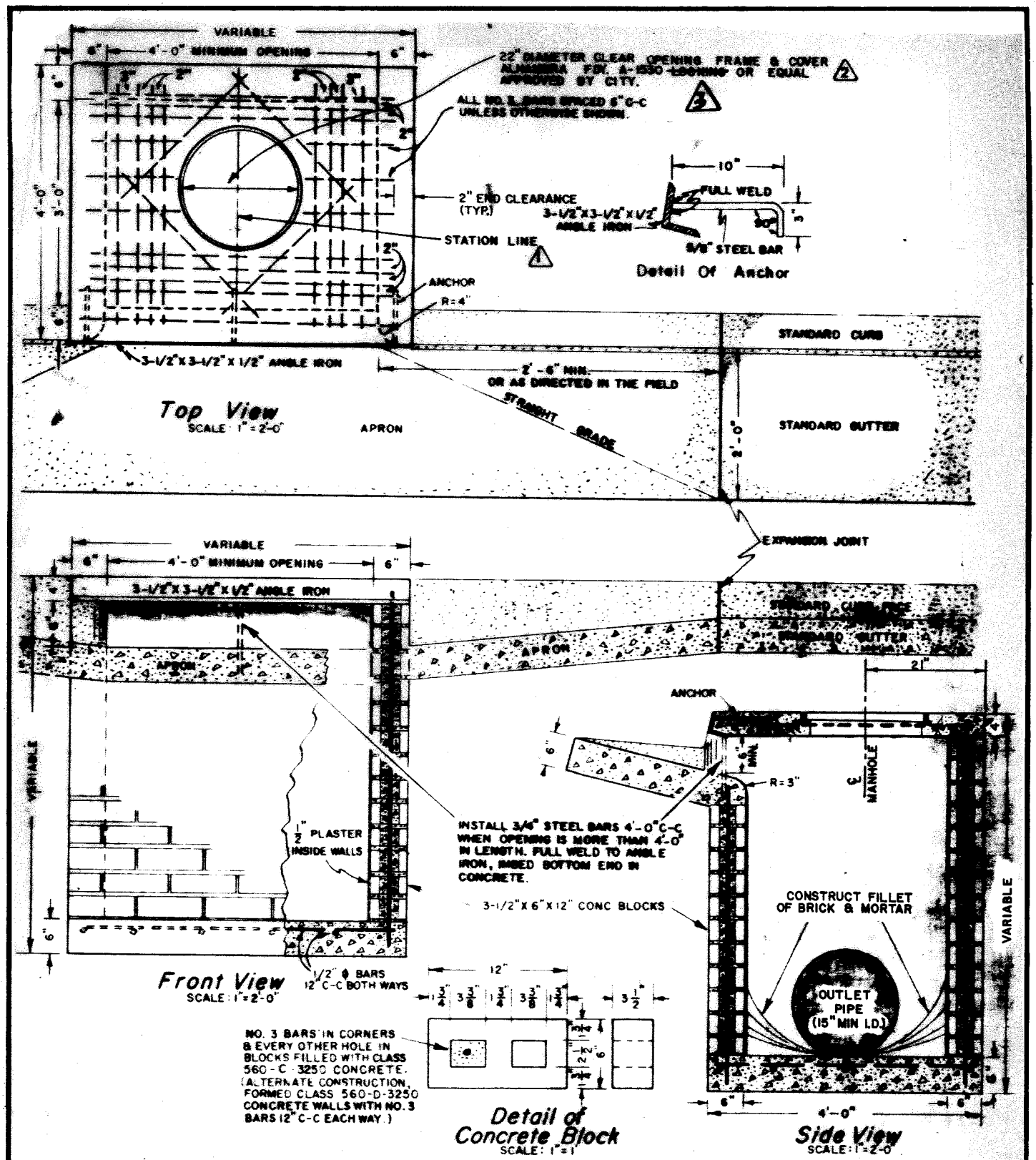

NOTE: PIPE SIZE AND OUTLET TO BE SHOWN ON GENERAL PLANS. STANDARD CATCH BASIN TO BE 4'-0" X 3'-0" INSIDE UNLESS OTHERWISE SHOWN ON GENERAL PLANS. CONSTRUCT 1/2" PER FOOT SLOPE ON BOTTOM OF CATCH BASIN TOWARD OUTLET. THE AMOUNT AND LENGTH OF STEEL USED IN CONSTRUCTION TO VARY ACCORDING TO THE SIZE OF THE CATCH BASIN.

APPROVED Robert P. Wales DATE 8/3/78
PUBLIC WORKS DIRECTOR - R.C.E. 18793

MARK	REVISIONS	APPR.	DATE
1	Added Station Line	wdg	8-25-80
2	Changed Sq. Manhole to Round	wdg	7-7-82
3	REMOVED LOCKING REQ'M	[illegible]	4/29/04

CITY OF RIVERSIDE

PUBLIC WORKS DEPT. - ENGINEERING DIV.

STORM WATER CATCH BASIN TYPE 1

STANDARD DRAWING NO. 400

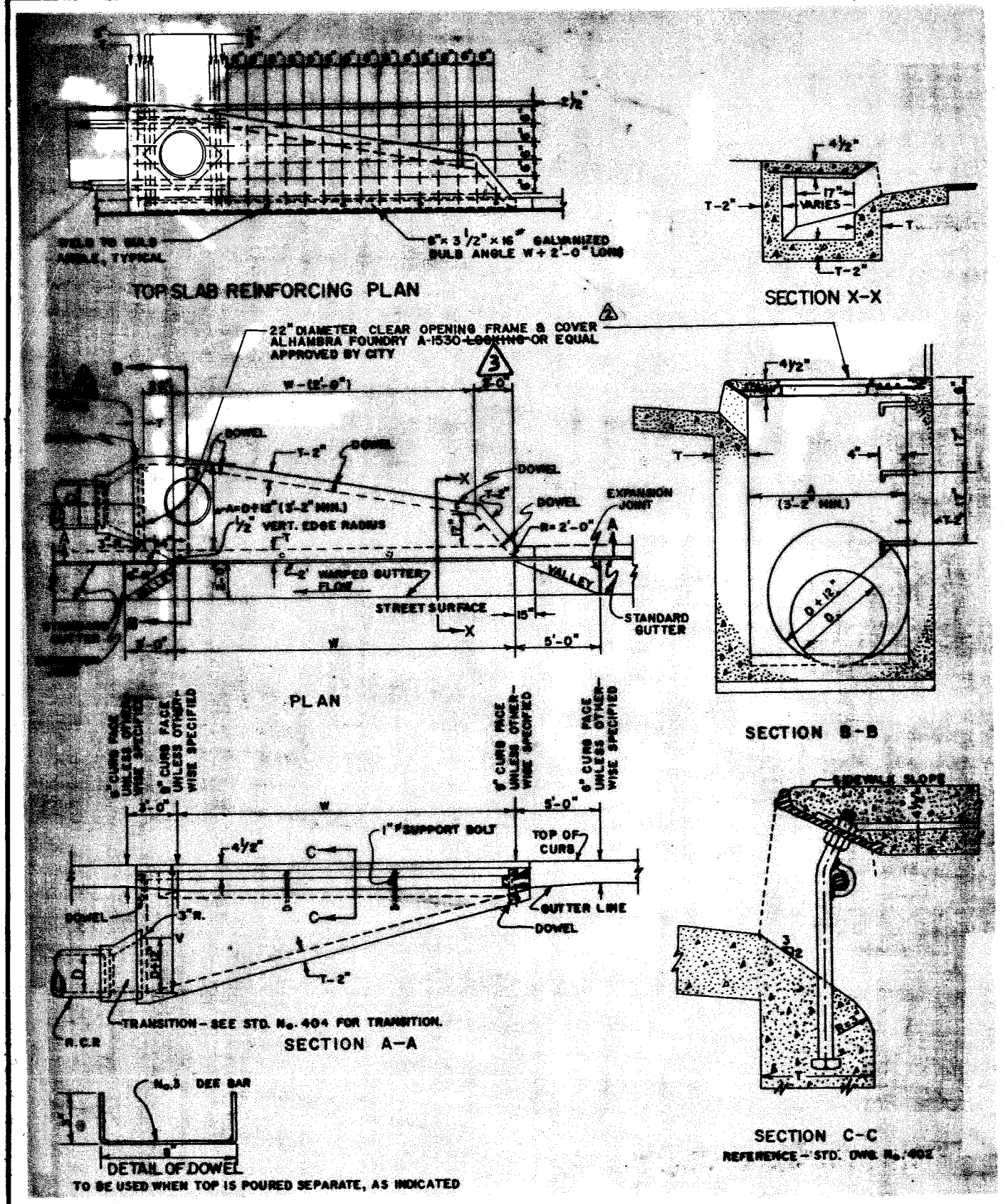

APPROVED Robert C. Wales DATE 8/3/78
PUBLIC WORKS DIRECTOR - R.C.E. 18793

MARK	REVISIONS	APPR.	DATE
1	Added Station Line		8-25-80
2	Changed Std Dwg 450 to Alhambra A-1530 Locking		4/23/87
3	REMOVED LOCKING REQ.		4/29/04

CITY OF RIVERSIDE

PUBLIC WORKS DEPT. - ENGINEERING DIV.

STORM WATER CATCH BASIN TYPE 2

STANDARD DRAWING NO. **401**

Sheet 1 of 2

DIMENSIONS: T = 8 inches if V is less than 8 feet.
T = 10 inches if V is 8 feet or more.
V = 5.25 feet unless otherwise specified.
W = As specified on plan (8 feet min.)
D = As specified on plan (15 inch min.)
A = D plus 12 inches (38 inches min.)

CONCRETE: Concrete shall be Class 560-C-3250.

REINFORCING STEEL shall be No. 3 bars unless otherwise specified. Clearance shall be 1½ inches from bottom of slab.

STEPS: ¾ inch plain round galvanized steel steps with drop step (17 inches apart) required when V is greater than 4 feet 6 inches. The top step shall be 6 inches below the surface and shall be 2½ inches from the wall. Only one step (12 inches from bottom) if V is 4 feet 6 inches or less. Step shall be anchored not less than 4 inches in wall of basin.

SUPPORT BOLT: For details see Standard Drawing No. 402.

TRANSITION: For details see Standard Drawing No. 404.

FLOOR of basin shall be given a steel trowel finish and shall slope from all directions to the outlet.

SURFACE of all exposed concrete shall conform in slope, grade, color, finish and scoring to existing or proposed curb and walk adjacent to the basin.

CURVATURE of the lip and sidewalls at gutter openings shall be formed by curved forms and shall not be made by plastering.

MANHOLE shall be placed along back wall near outlet.

OUTLET pipe shall be trimmed to the final shape and length before concrete is poured.

APPROVED Robert C. Wolcott DATE 8/3/78
PUBLIC WORKS DIRECTOR - R.C.E. 18793

MARK	REVISIONS	APPR.	DATE

CITY OF RIVERSIDE
PUBLIC WORKS DEPT. - ENGINEERING DIV.

STORM WATER CATCH BASIN
TYPE 2

STANDARD DRAWING NO. 401
Sheet 2 of 2

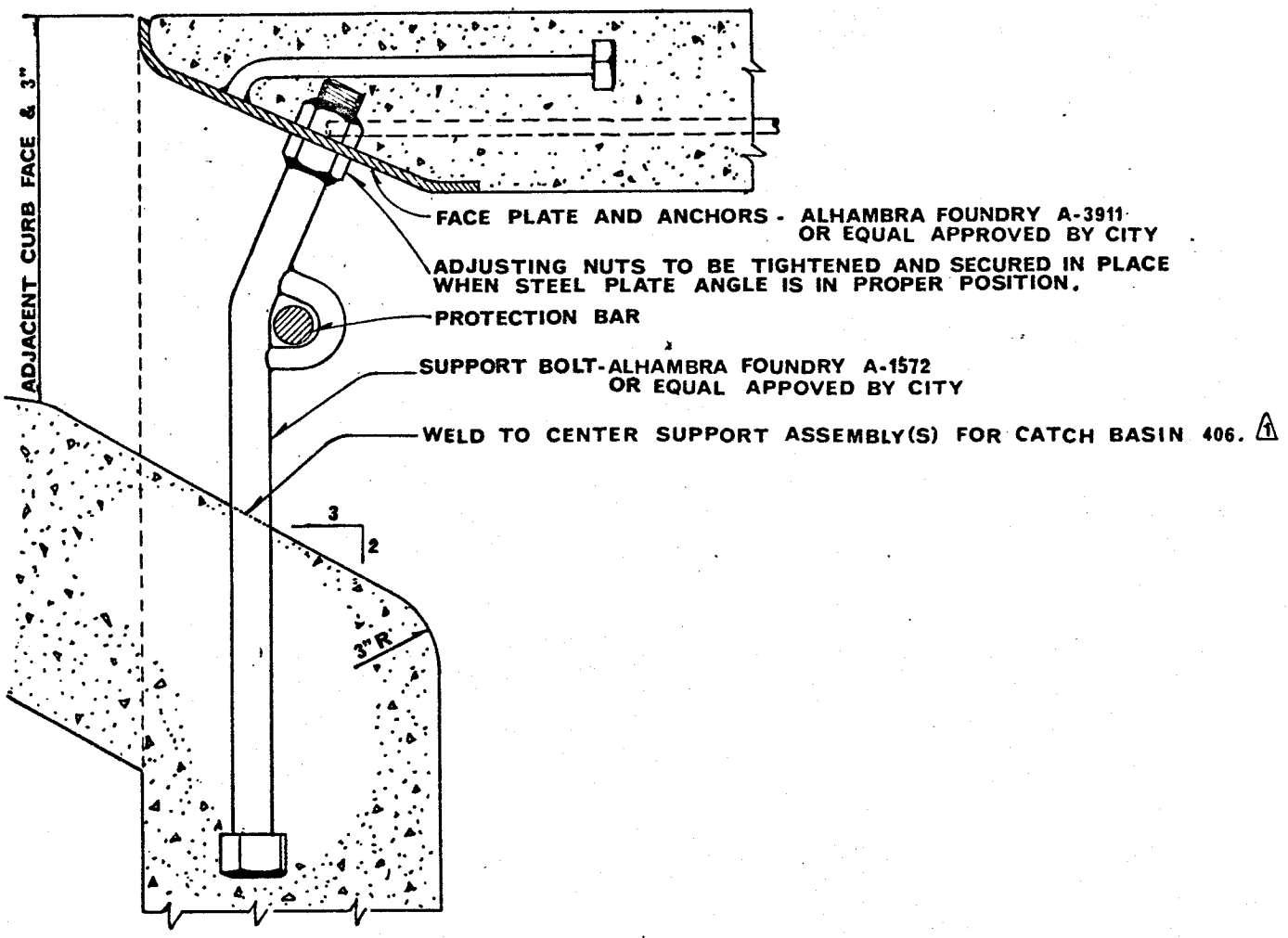

1. Face plate shall be embedded 4" in adjacent curb on each side of opening.
2. Protection bar shall be 1" diameter plain steel. Embed 5" at each end. Center in opening when support bolts are not used.
3. Support bolts are required if width of opening exceeds 5'. Maximum spacing of bolts is 4'.
4. All exposed metal parts shall be galvanized.

APPROVED [signature] DATE 8-29-73
PUBLIC WORKS DIRECTOR - R.C.E. 8134

MARK	REVISIONS	APPR.	DATE
4	Added Note	[signature]	3/7/83

CITY OF RIVERSIDE
PUBLIC WORKS DEPT. - ENGINEERING DIV.

CATCH BASIN INLET

STANDARD DRAWING NO. 402

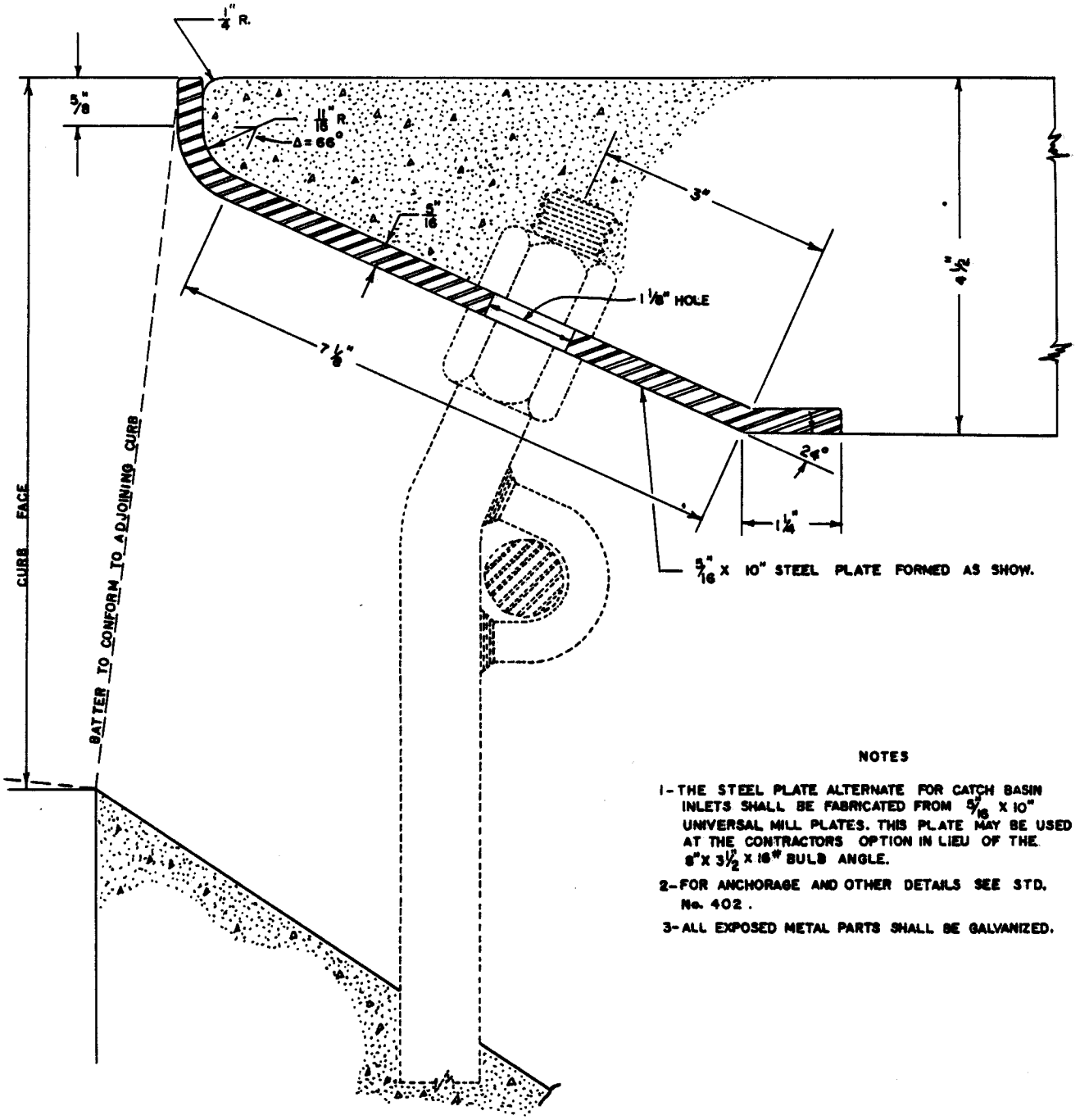

NOTES

1- THE STEEL PLATE ALTERNATE FOR CATCH BASIN INLETS SHALL BE FABRICATED FROM 5/16" X 10" UNIVERSAL MILL PLATES. THIS PLATE MAY BE USED AT THE CONTRACTORS OPTION IN LIEU OF THE 8" X 3 1/2" X 16# BULB ANGLE.

2- FOR ANCHORAGE AND OTHER DETAILS SEE STD. No. 402.

3- ALL EXPOSED METAL PARTS SHALL BE GALVANIZED.

APPROVED Robert C. Wales DATE 8/3/78
PUBLIC WORKS DIRECTOR - R.C.E. 18793

MARK	REVISIONS	APPR.	DATE

CITY OF RIVERSIDE

PUBLIC WORKS DEPT. - ENGINEERING DIV.

CATCH BASIN INLET STEEL PLATE ALTERNATE

STANDARD DRAWING NO. 403

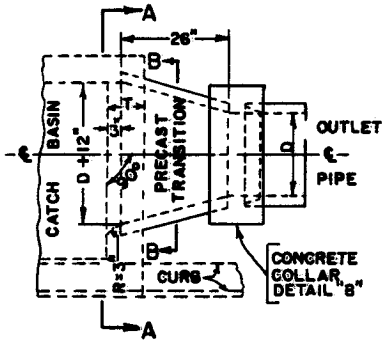

PLAN

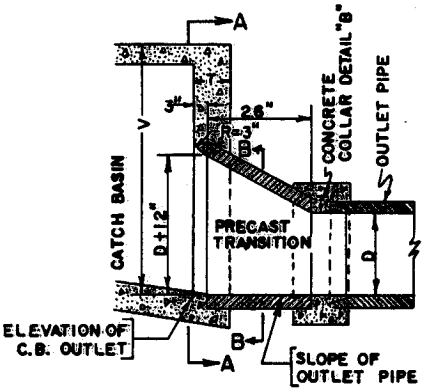

℄ PROFILE

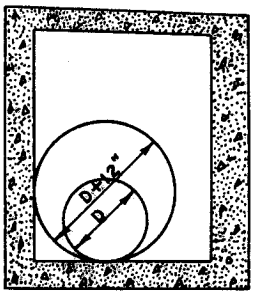

SECTION A-A

CASE-1

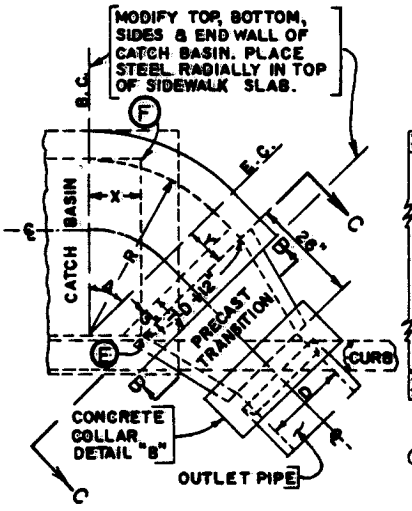

PLAN

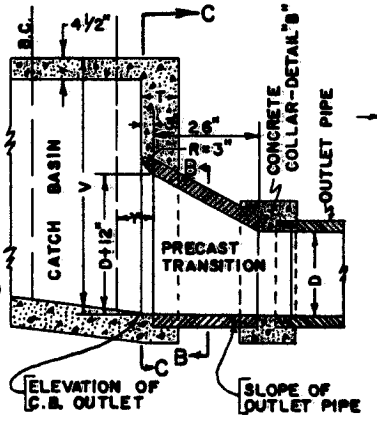

℄ PROFILE

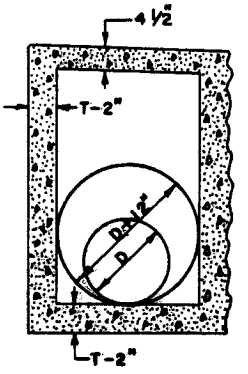

SECTION C-C

TABLE - A

D	Δ	R	X	Y
15"-18"	30°	38"	16"	13 7/8"
15"-18"	45°	38"	11 3/8"	8"
21"	30°	38"	10"	8 5/8"
21"	45°	38"	7 1/8"	5"
24"	30°	38"	4"	3 1/2"
24"	45°	38"	2 7/8"	2"
27" OR MORE	30°	D+12"	0"	0"
	45°	D+12"	0"	0"

CASE-2

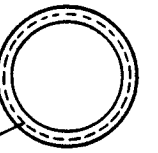

PRECAST TRANSITION SHALL BE REINFORCED FOR (1250-D) FOR D+12" R.C.P.

SECTION B-B

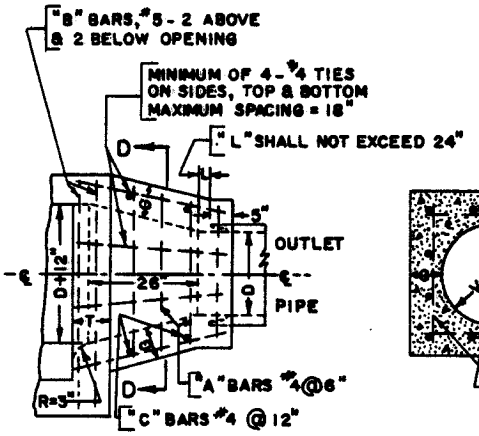

PLAN
STEEL REINFORCING

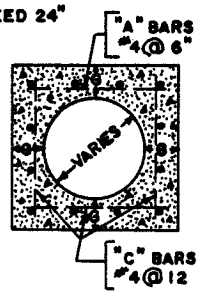

SECTION D-D

TABLE - B

D	15"	18"	21"	24"	27"	30"
G	7"	7"	7"	7½"	8"	8"

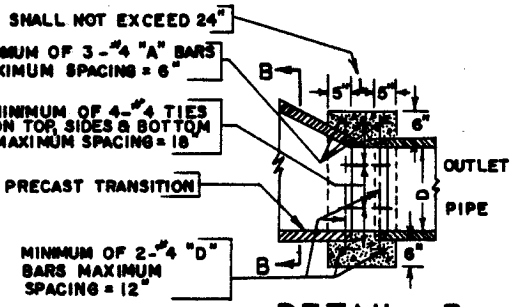

DETAIL - A
MONOLITHIC TRANSITION
(SEE NOTE-1)

DETAIL - B
SQUARE CONCRETE COLLAR

APPROVED Robert C. Wells DATE 7/14/78
PUBLIC WORKS DIRECTOR - R.C.E. 18793

MARK	REVISIONS	APPR.	DATE

CITY OF RIVERSIDE
PUBLIC WORKS DEPT. - ENGINEERING DIV.

CATCH BASIN OUTLET TRANSITION STRUCTURE

STANDARD DRAWING NO. **404**

Sheet 1 of 2

NOTES FOR CATCH BASIN INLET TRANSITION STRUCTURE

1 - TRANSITION - May be either precast (Section B-B) or monolithic (Section D-D) at Contractor's option.

2 - PRECAST TRANSITION - Shall be reinforced for 1250-D for D+12 inch concrete pipe.

3 - CONCRETE COLLAR - (Detail "B") shall be used only to join the precast transition with the outlet pipe.

4 - CONCRETE - Shall be of the same class as the structure with which it is poured.

5 - CURVATURE - of the rounded edge of the outlet and sidewalls shall be formed by curved forms and shall not be made by plastering.

6 - INTERIOR SURFACE - of structure shall be smooth and clean, and free from pockets or protuberances.

7 - SURFACE - of all exposed concrete shall conform in slope, grade, color, finish, and scoring to existing or proposed curb and walk adjacent to the basin.

8 - DIMENSIONS - T, V, and steel reinforcement details are shown either on std. drawing No. 401, Sheet 2, or on the improvement plan for the catch basin.

9 - OUTLET PIPE - shall be trimmed to final shape and length before concrete is poured.

10- REINFORCING STEEL - shall be 1 1/2" clear from face of concrete unless otherwise shown.

11- TRANSITION STRUCTURE - (Case 2) may be constructed in any direction within the limits of table "A" as specified on the improvement plan, by rotating it about either points "E" or "F".

APPROVED Robert C. Wales DATE 3/1/78
PUBLIC WORKS DIRECTOR - R.C.E. 18793

MARK	REVISIONS	APPR.	DATE

CITY OF RIVERSIDE
PUBLIC WORKS DEPT. - ENGINEERING DIV.

CATCH BASIN OUTLET TRANSITION STRUCTURE

STANDARD DRAWING NO. 404
Sheet 2 of 2

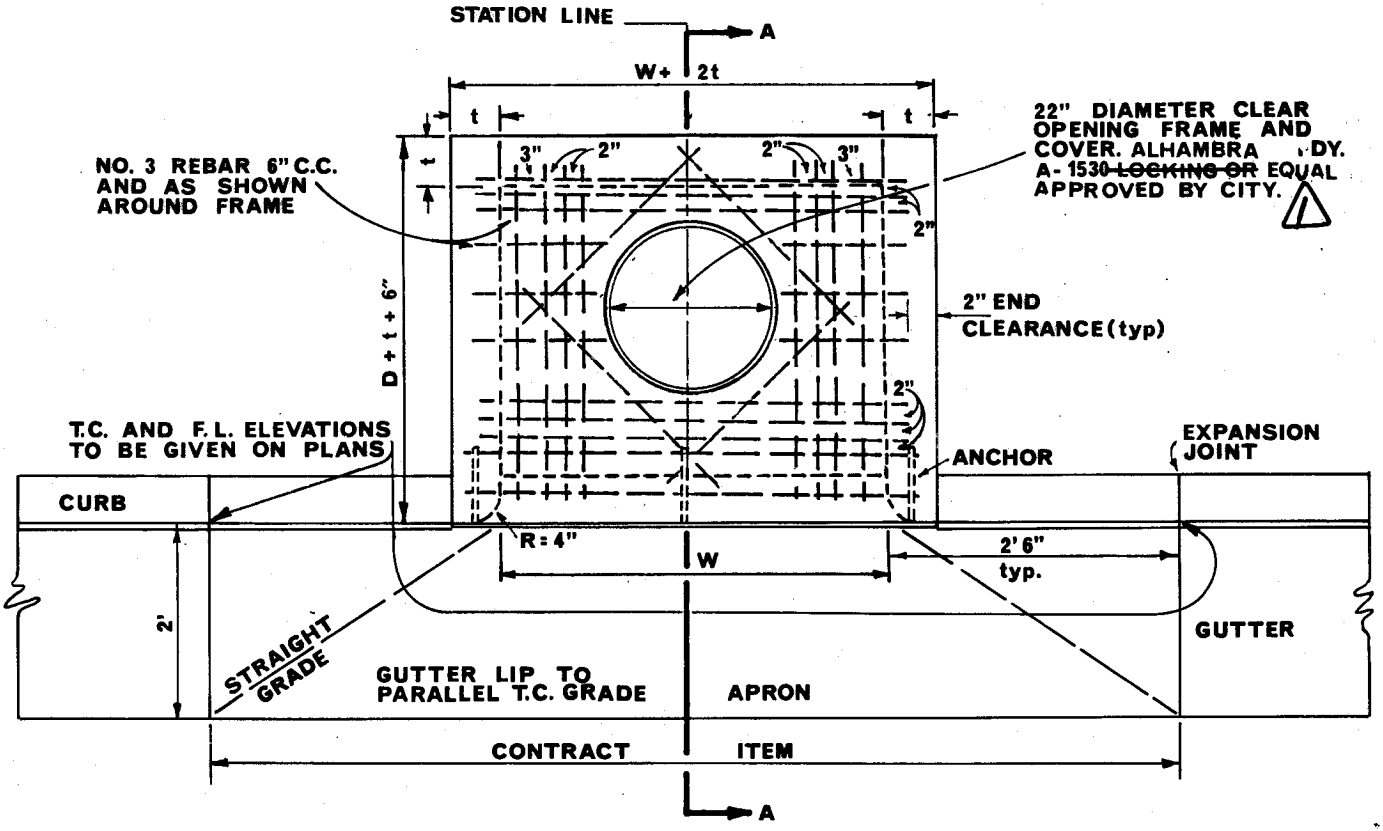

TOP VIEW

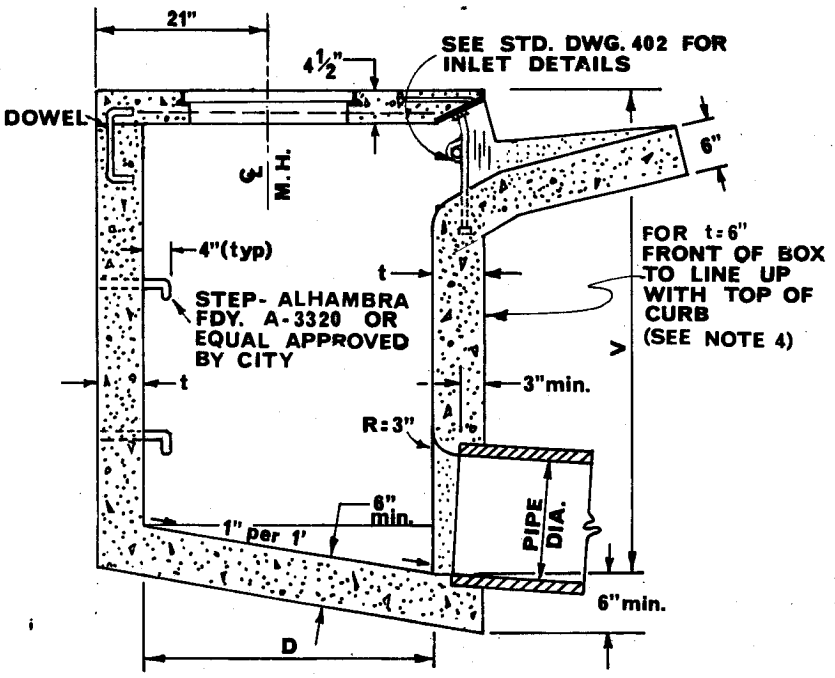

SECTION A - A

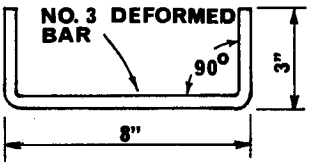

DOWEL DETAIL
TO BE USED WHEN TOP IS POURED SEPARATE, ONE AT EACH CORNER

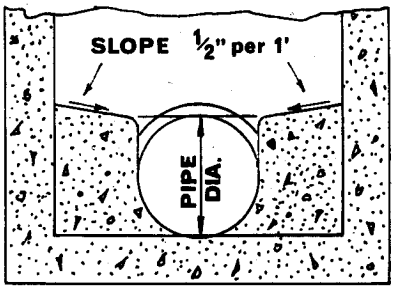

CHANNEL DETAIL

APPROVED Robert C. Wales DATE 12/27/82
PUBLIC WORKS DIRECTOR - R.C.E. 18793

MARK	REVISIONS	APPR.	DATE
1	REMOVED LOCKING REQ.	DB	4/29/04

CITY OF RIVERSIDE
PUBLIC WORKS DEPT. - ENGINEERING DIV.

CATCH BASIN

STANDARD DRAWING NO. **405**
Sheet 1 of 2

Notes:

1. CONCRETE shall be 560-C-3250 Portland Cement Concrete.

2. CONNECTOR PIPE shall be horizontally centered on the wall of the catch basin which faces the connector pipe.

3. CURVATURE of the lip and sidewalls at the opening shall be formed by curved forms and shall not be made by plastering.

4. DIMENSIONS:
   W shall be as specified on the plan (4' min.)
   V shall be as specified on the plan.
   D = 3' unless otherwise specified on the plan.
   t = 6" if V is 4' or less
   t = 8" if V is between 4' and 8'
   t = 10" if V is 8' or more
   Thickness of the wall under the opening shall be t + 2" when W exceeds 7'0"
   t > 6", widening of wall shall be on street side.

5. CHANNEL shall be constructed in catch basins having inlet pipes. Where V minus shelf height is less than 2½' the channel may be omitted.

6. STEP SPACING
   If V is 3.5' or less, no steps are required.
   If V is more than 3.5' and not more than 4', install one step 12" above the floor.
   If V is more than 4', install steps 12" apart with the top step 20" to 24" below the top surface of the basin.
   When the basin has a channel use V minus shelf height to determine step spacing.

7. PIPES shall be trimmed to the final shape and length before concrete is poured.

8. SURFACE of all exposed concrete in basin shall conform in slope, grade, color, finish and scoring to existing or proposed curb and walk adjacent to the basin and shall be free from protruding wires and nails. Floor of channel shall be given a steel-troweled finish.

9. TOP OF BASIN shall slope 2% toward curb except when otherwise shown on the plan or to fit existing sidewalk. To be poured monolithic with S/W if curb S/W is used.

10. FRAME AND COVER shall be located as shown on sheet 1 unless otherwise shown on the plan.

APPROVED Robert P. Wales DATE 10/27/82
PUBLIC WORKS DIRECTOR - R.C.E. 18793

MARK	REVISIONS	APPR.	DATE

CITY OF RIVERSIDE
PUBLIC WORKS DEPT. - ENGINEERING DIV.

CATCH BASIN

STANDARD DRAWING NO. 405
Sheet 2 of 2

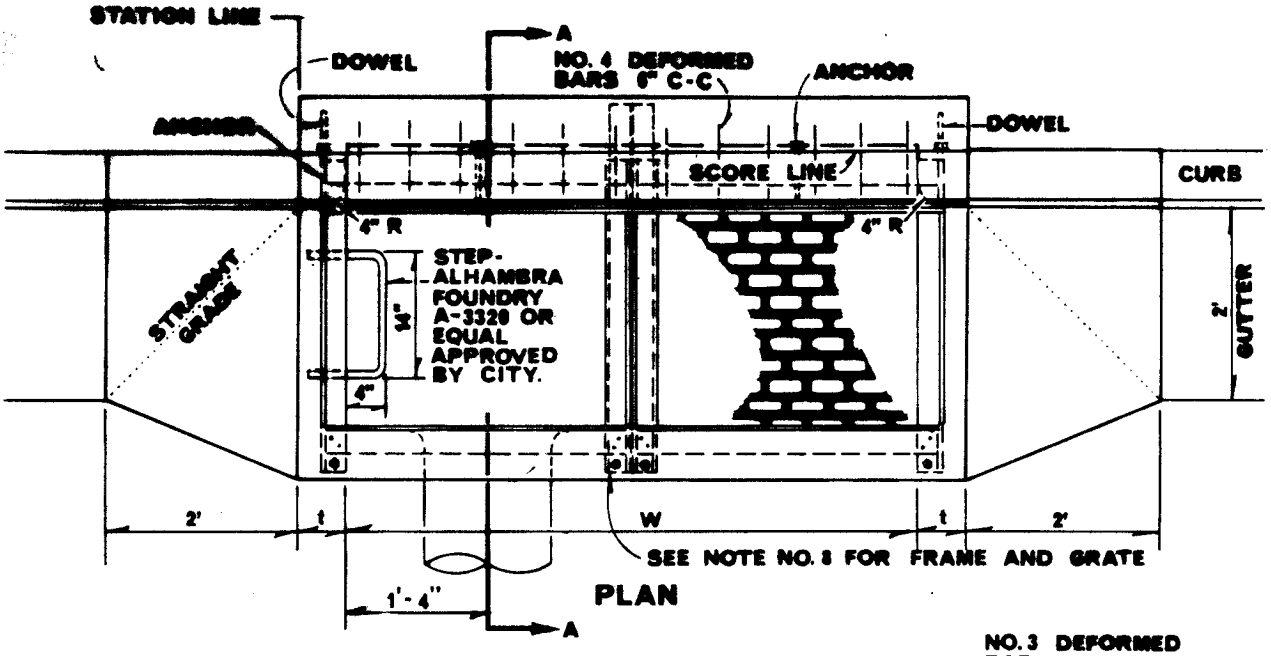

PLAN

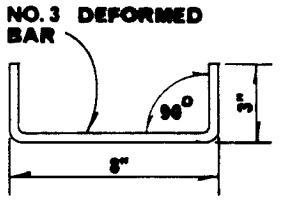

DOWEL DETAIL

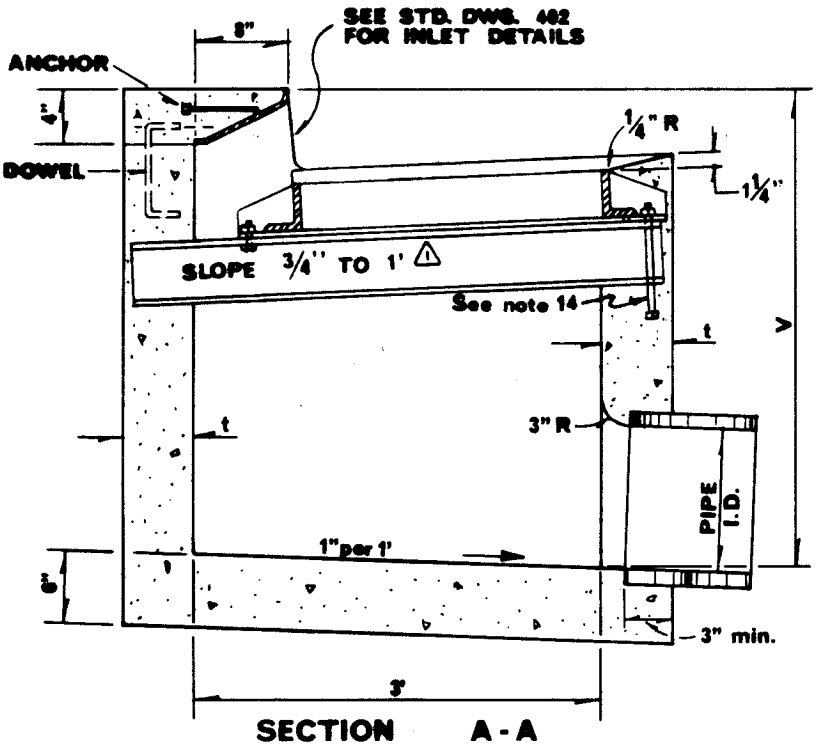

SECTION A-A

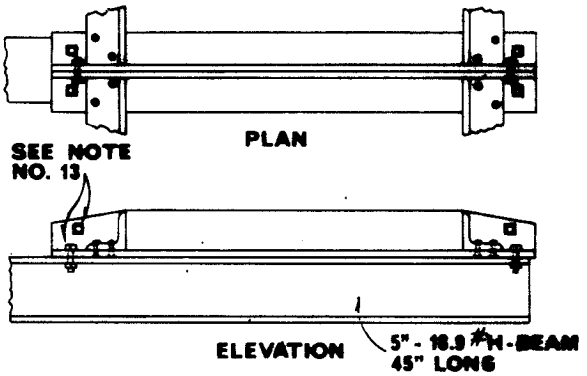

CENTER SUPPORT DETAIL

APPROVED [signature] DATE 11/9/82
PUBLIC WORKS DIRECTOR - R.C.E. 18793

△1	Added slope to grate support	[signature]	4/23/84

CITY OF RIVERSIDE

PUBLIC WORKS DEPT. - ENGINEERING DIV.

CATCH BASIN

STANDARD DRAWING NO. **406**

Sheet 1 of 2

Notes:

1. CONCRETE shall be 560-C-3250 Portland Cement Concrete.

2. BASIN shall have one grating unless otherwise specified on plans.

3. CURVATURE of the end-walls at the curb opening shall be formed by curved forms and shall not be made by plastering.

4. DIMENSIONS:
   t=6" if V is 4' or less
   t-8" if V is between 4' and 8'
   t=10" if V is 8' or more
   V shall be as specified on plans
   W=2'11 3/8" for one grating. Add 3'-5 3/8" per additional grating

5. PIPES shall be trimmed to the final shape and length before concrete is poured.

6. CHANNEL shall be constructed in catch basins having inlet pipes. Where V minus shelf height is less than 2½' the channel may be omitted. See Standard Drawing No. 405 for channel detail.

7. SURFACE of all exposed concrete in basin shall conform in slope, grade, color, finish and scoring to existing or proposed curb and walk adjacent to the basin and shall be free from protruding wires and nails. Floor of channel shall be given a steel-trowled finish.

8. FRAME shall be Alhambra Foundry A-1540 or equal approved by city; grate shall be A-1546 or equal approved by city.

9. TOP OF BASIN shall slope 2% toward curb except when otherwise shown on the plan or to fit existing sidewalk. To be poured monolithic with sidewalk if curb sidewalk is used.

10. STEP SPACING:
    If V is 3½' or less, no steps are required
    If V is more than 3½' and not more than 4', install one step 12" above the floor
    If V is more than 4', install steps 12" apart with the top step 20" to 24" below the top surface of the basin
    When the basin has a channel use V minus shelf height to determine step spacing.

11. CENTER SUPPORT ASSEMBLY shall be used when two or more gratings are specified.

12. ½" MACHINE BOLTS shall be used to join two or more frames together and to the H beam.

13. METAL PARTS shall be structural grade steel and all exposed metal parts shall be galvanized.

14. ½" x 8" BOLTS with square heads and nuts shall be placed at outside corners of basin.

APPROVED [signature] DATE 4/9/82
PUBLIC WORKS DIRECTOR - R.C.E. 18793

MARK	REVISIONS	APPR.	DATE

CITY OF RIVERSIDE
PUBLIC WORKS DEPT. - ENGINEERING DIV.

CATCH BASIN

STANDARD DRAWING NO. 406
SHT 2 OF 2

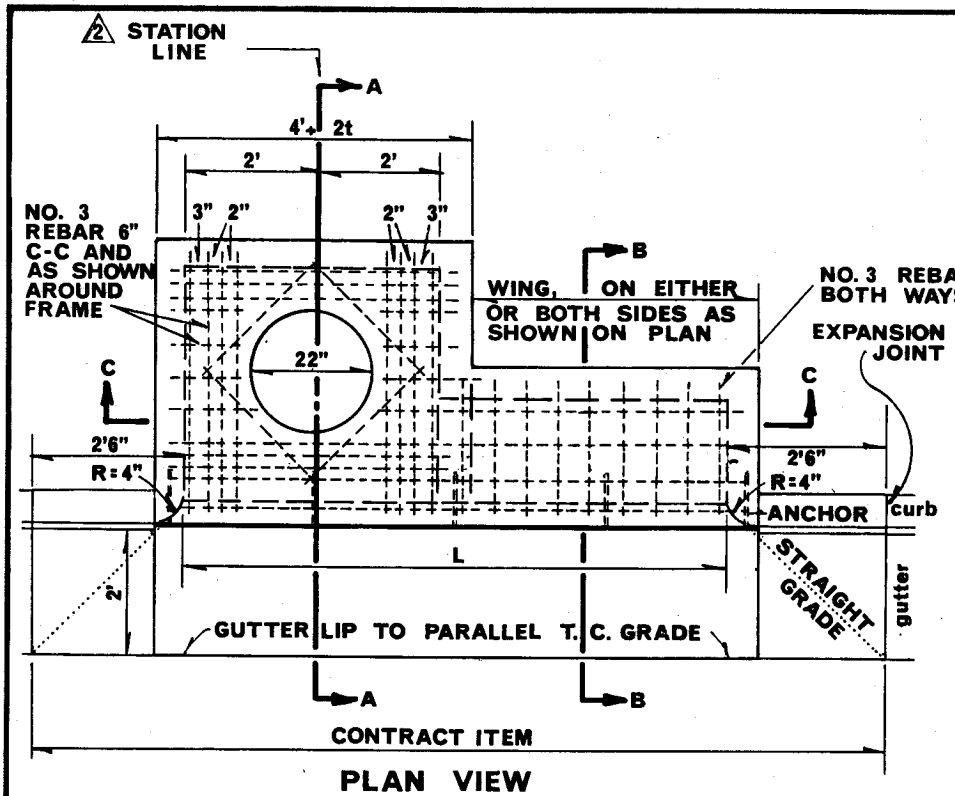

PLAN VIEW

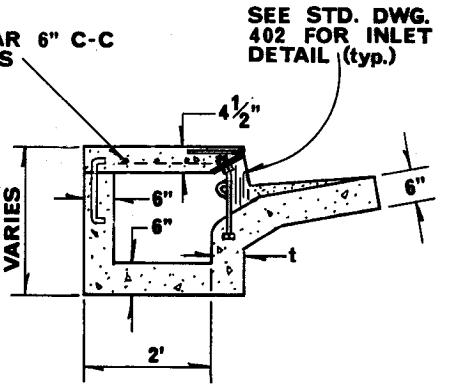

SECTION B-B

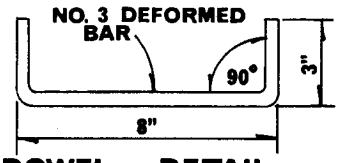

DOWEL DETAIL
TO BE USED WHEN TOP IS POURED SEPARATE, ONE AT EACH CORNER.

5 22" DIA. CLEAR OPENING FRAME AND COVER, ALHAMBRA FOUNDRY A-1530 ~~LOCKING~~ OR EQUAL APPROVED BY CITY. 6
1
4

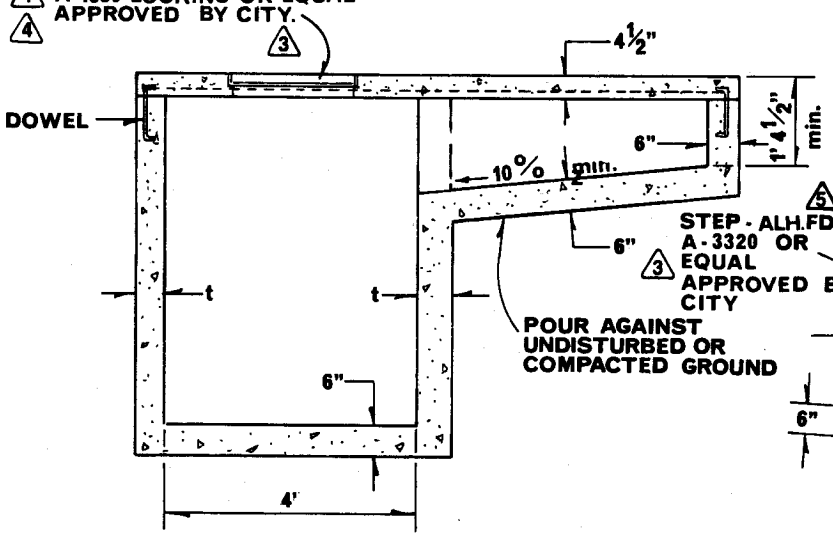

SECTION C-C

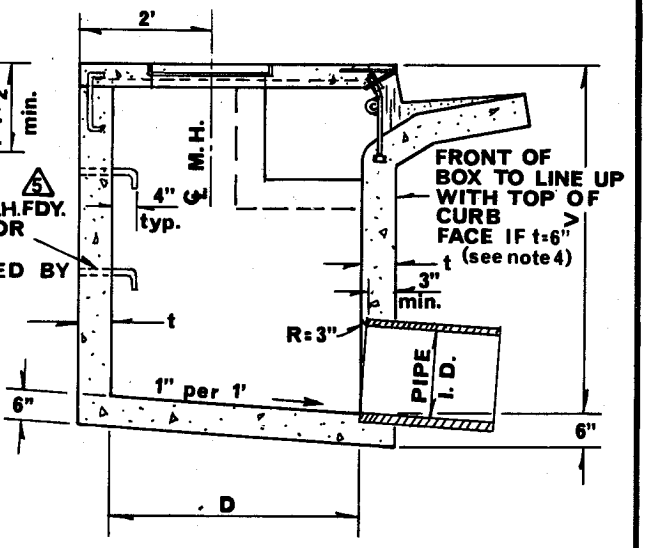

SECTION A-A

6	REMOVED LOCKING REQ		

APPROVED [signature] DATE 3-8-74
PUBLIC WORKS DIRECTOR - R.C.E. 8134

MARK	REVISIONS	APPR.	DATE
1	Was R-1535		
2	Station Line Added	[illegible]	8-25-80
3	Defined approval	DLR	4-7-82
4	ADDED LOCKING	[illegible]	7-7-82
5	Changed Riverside Fdy to Alhambra	TJS	4/29/04

CITY OF RIVERSIDE
PUBLIC WORKS DEPT. - ENGINEERING DIV.

CATCH BASIN

STANDARD DRAWING NO. **407**
Sheet 1 of 2

NOTES:

1. CONCRETE shall be **560-C-3250** Portland Cement Concrete.

2. CONNECTOR PIPE shall be horizontally centered on the wall of the deep portion of the catch basin which faces the connector pipe.

3. CURVATURE of the lip and sidewalls at the opening shall be formed by curved forms and shall not be made by plastering.

4. DIMENSIONS:
   L shall be as **specified on the plan** (8' min.)
   V shall be **as specified on the plan.**
   D = 3' unless otherwise specified on the plan.
   t = 6" if V is 4' or less
   t = 8" if V is between 4' and 8'
   t = 10" if V is 8' or more
   t > 6", widening of wall shall be on street side.

5. CHANNEL shall be constructed in catch basins having inlet pipes. Where V minus shelf height is less than $2\frac{1}{2}$' the channel may be omitted. See Standard Drawing No. 405 for channel detail.

6. STEP SPACING
   If V is 3.5' or less, no steps are required.
   If V is more than 3.5' and not more than 4', install one step 12" above the floor.
   If V is more than 4', install steps 12" apart with the top step 20" to 24" below the top surface of the basin.
   When the basin has a channel use V minus shelf height to determine step spacing.

7. PIPES shall be trimmed to the final shape and length before concrete is poured.

8. SURFACE of all exposed concrete in basin shall conform in slope, grade, color, finish and scoring to existing or proposed curb and walk adjacent to the basin and shall be free from protruding wires and nails. Floor of channel shall be given a steel-troweled finish.

9. TOP OF BASIN shall slope 2% toward curb except when otherwise shown on the plan or to fit existing sidewalk. **To be poured monolithic with S/W if curb S/W is used.**

10. FRAME AND COVER shall be located as shown on sheet 1 unless otherwise shown on the plan.

APPROVED [signature] DATE 3-8-74
PUBLIC WORKS DIRECTOR R.C.E. 8134

MARK	REVISIONS	APPR	DATE
1	Concrete class revision	[illegible]	[illegible]
2	Note revision	[illegible]	8-25-80
3	Added	[illegible]	7-7-82

CITY OF RIVERSIDE
PUBLIC WORKS DEPT - ENGINEERING DIV.

CATCH BASIN

STANDARD DRAWING NO. **407**
Sheet 2 of 2

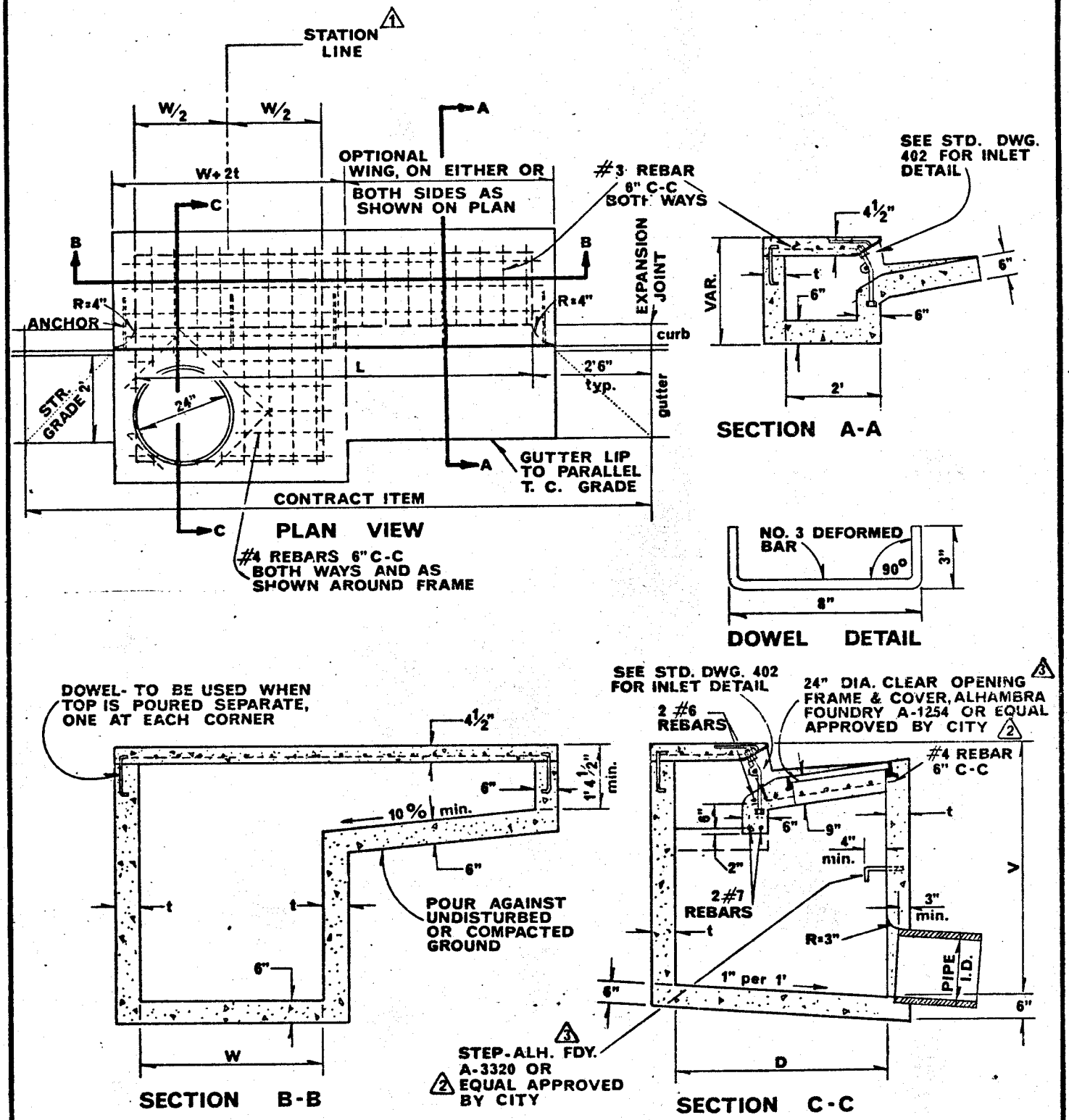

APPROVED: [signature] DATE 3-8-74
PUBLIC WORKS DIRECTOR - R.C.E. 8134

MARK	REVISIONS	APPR.	DATE
1	Station Line Added		8-25-80
2	Defined approval		4-7-82
3	Changed Riverside Fdy to Alhambra		7-7-82

CITY OF RIVERSIDE

PUBLIC WORKS DEPT. - ENGINEERING DIV.

CATCH BASIN

STANDARD DRAWING NO. **408**

Sheet 1 of 2

NOTES:

1. CONCRETE shall be Class 560-C-3250. ①

2. CURVATURE of the lip and sidewalls at the opening shall be formed by curved forms and shall not be made by plastering.

3. DIMENSIONS:
   W shall be as specified on the plan (4' min.)
   L shall be as specified on the plan.
   V shall be as specified on the plan.
   D = 4'6" unless otherwise specified on the plan.
   t = 6" if V is 4' or less.
   t = 8" if V is between 4' and 8'.
   t = 10" if V is 8' or more.

4. CHANNEL shall be constructed in catch basins having inlet pipes. Where V minus shelf height is less than 2½' the channel may be omitted. See Standard Drawing No. 405 for channel detail.

5. STEP SPACING
   If V is 3.5' or less, no steps are required.
   If V is more than 3.5' and not more than 4', install one step 12" above the floor.
   If V is more than 4', install steps 12" apart with the top step 20" to 24" below the top surface of the basin.
   When the basin has a channel use V minus shelf height to determine step spacing.

6. PIPES shall be trimmed to the final shape and length before concrete is poured.

7. SURFACE of all exposed concrete in basin shall conform in slope, grade, color, finish and scoring to existing or proposed curb and walk adjacent to the basin and shall be free from protruding wires and nails. Floor of channel shall be given a steel-troweled finish.

8. TOP OF BASIN shall slope 2% toward curb except when otherwise shown on the plan or to fit existing sidewalk. To be poured monolithic with S/W if curb S/W is used.

9. FRAME AND COVER shall be located as shown on sheet 1 unless otherwise shown on the plan.

APPROVED Robert P. Wales DATE 7/4/78
PUBLIC WORKS DIRECTOR - R.C.E. 18793

MARK	REVISIONS	APPR.	DATE
①	Concrete Class Revision	wdg	8-25-80

CITY OF RIVERSIDE
PUBLIC WORKS DEPT. - ENGINEERING DIV.

CATCH BASIN

STANDARD DRAWING NO. 408
Sheet 2 of 2

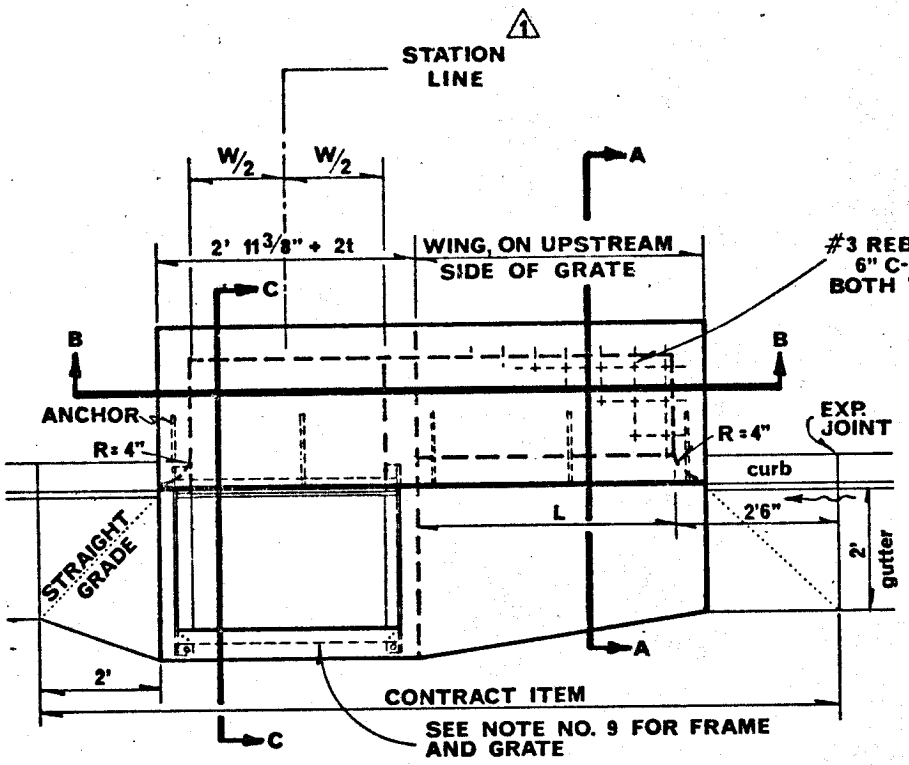

PLAN VIEW

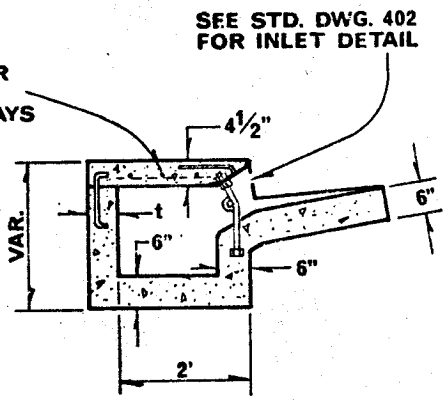

SECTION A-A

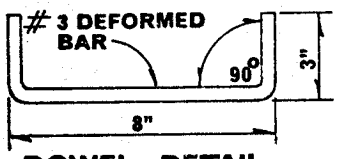

DOWEL DETAIL

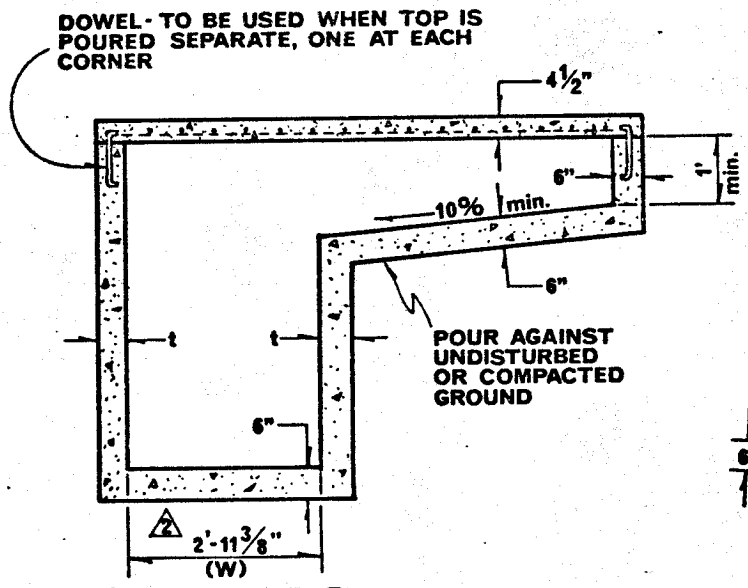

SECTION B-B

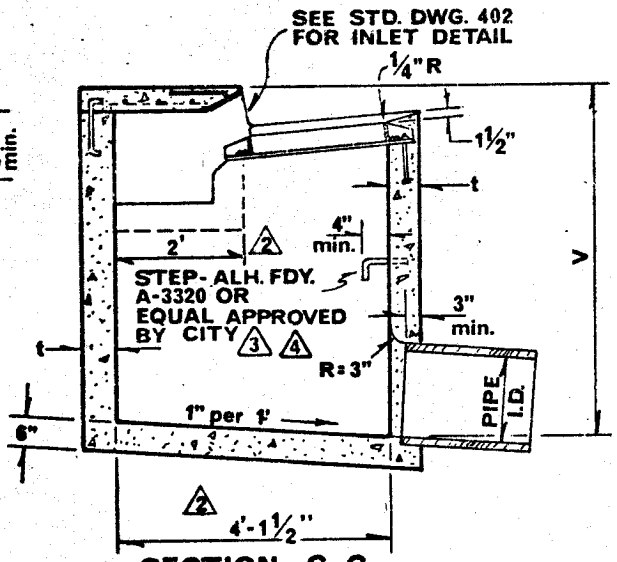

SECTION C-C

APPROVED [signature] DATE 7/14/78
PUBLIC WORKS DIRECTOR - R.C.E. 18793

MARK	REVISIONS	APPR.	DATE
1	Station Line Added	[illegible]	8-25-80
2	Dimensions Added/Or Corrected		
3	Defined approval	D&R	4-7-82
4	Changed Riverside Fdy. to Alhambra	[illegible]	[illegible]

CITY OF RIVERSIDE

PUBLIC WORKS DEPT. - ENGINEERING DIV.

CATCH BASIN

STANDARD DRAWING NO. **409**

Sheet 1 of 2

NOTES:

1. CONCRETE shall be Class 560-C-3250 (1).

2. CURVATURE of the lip and sidewalls at the opening shall be formed by curved forms and shall not be made by plastering.

3. DIMENSIONS:
   L shall be as specified on the plan.
   V shall be as specified on the plan.
   (2)
   t = 6" if V is 4' or less.
   t = 8" if V is between 4' and 8'.
   t = 10 if V is 8' or more.

4. CHANNEL shall be constructed in catch basins having inlet pipes. Where V minus shelf height is less than 2½' the channel may be omitted. See Standard Drawing No. 405 for channel detail.

5. STEP SPACING
   If V is 3.5' or less, no steps are required.
   If V is more than 3.5' and not more than 4', install one step 12" above the floor.
   If V is more than 4', install steps 12" apart with the top step 20" to 24" below the top surface of the basin.
   When the basin has a channel use V minus shelf height to determine step spacing.

6. PIPES shall be trimmed to the final shape and length before concrete is poured.

7. SURFACE of all exposed concrete in basin shall conform in slope, grade, color, finish and scoring to existing or proposed curb and walk adjacent to the basin and shall be free from protruding wires and nails. Floor of channel shall be given a steel-troweled finish.

8. TOP OF BASIN shall slope 2% toward curb except when otherwise shown on the plan or to fit existing sidewalk. To be poured monolithic with S/W if curb S/W is used.

9. FRAME shall be Alhambra (4) Foundry A-1540 or equal approved by city; grate shall be A-1546 or equal approved by city. (3)

10. METAL PARTS shall be structural grade steel and all exposed metal parts shall be galvanized.

APPROVED [signature] DATE 7/4/78
PUBLIC WORKS DIRECTOR - R.C.E. 18793

MARK	REVISIONS	APPR.	DATE
1	Concrete Class Revision	Lindy	8-25-80
2	Note Deleted		
3	Defined approval	D&R	4-7-82
4	Changed Riverside Fdy to Alhambra	Lindy	7-7-82

CITY OF RIVERSIDE
PUBLIC WORKS DEPT. - ENGINEERING DIV.

CATCH BASIN

STANDARD DRAWING NO. 409
Sheet 2 of 2

SEPTEMBER 2001

STANDARD 151-1 (FROM AMERICAN PUBLIC WORKS ASSOCIATION) REPLACES STANDARD 410 AND 411.

PER TOM BOYD
INTERIM PUBLIC WORKS DIRECTOR

SECTION
INLET TYPE 2

DETAIL OF ANCHOR

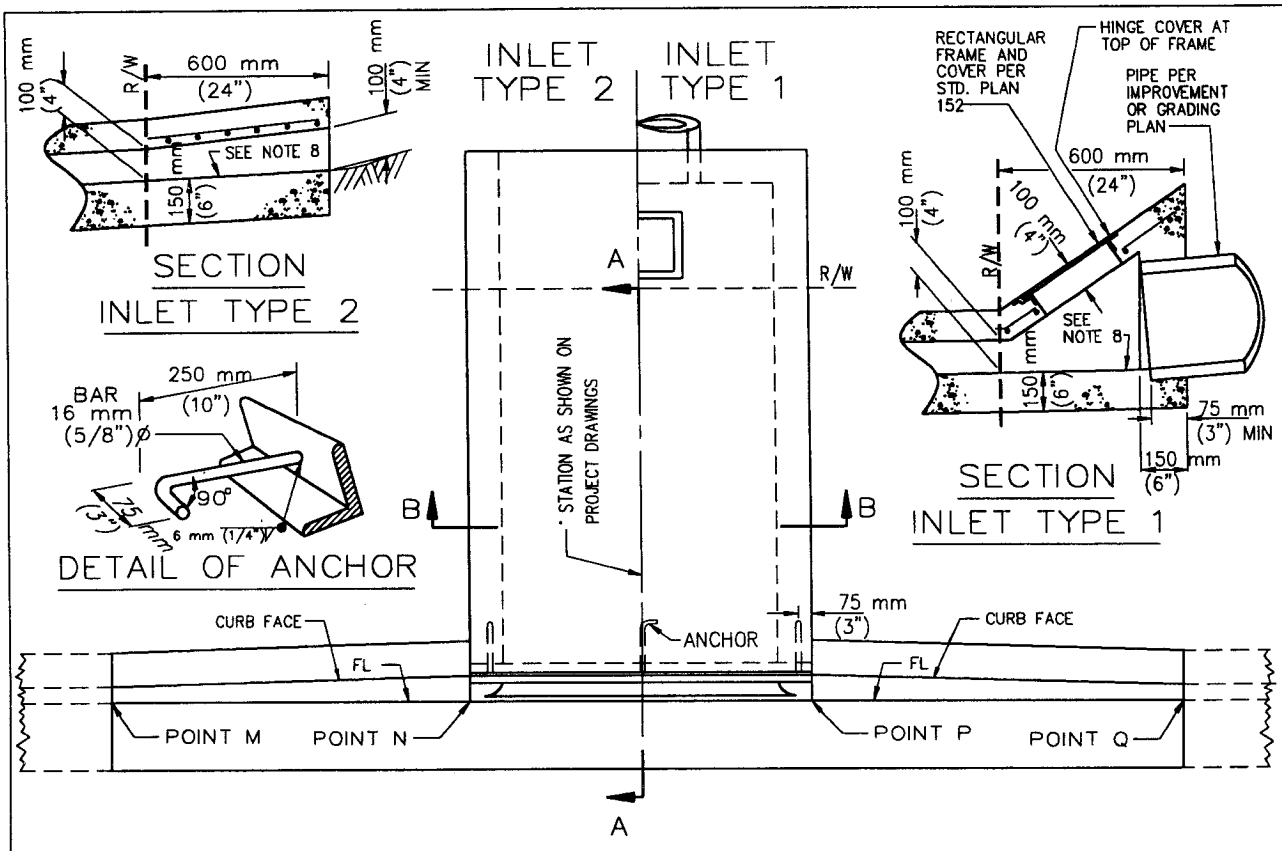

PLAN

SECTION
INLET TYPE 1

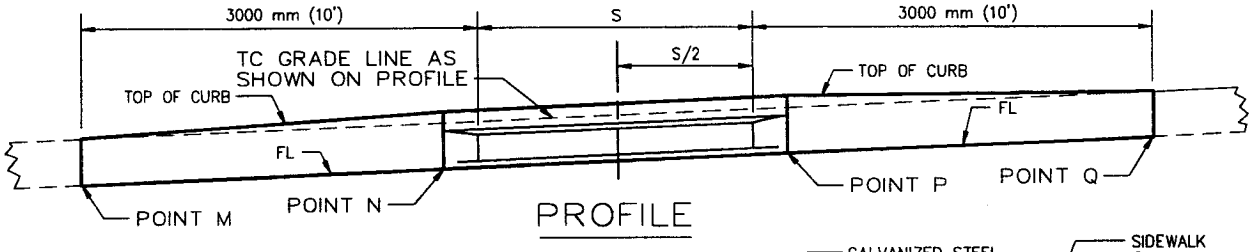

PROFILE

S, mm	J BAR SPACING, mm
300 (12")	240 (7")
450 (18")	240 (7")
600 (24")	240 (7")
750 (30")	240 (7")
900 (36")	240 (7")
1050 (42")	210 (6")
1200 (48")	180 (5")
1350 (54")	225 (6-1/2")
1500 (60")	180 (5")
1650 (66")	180 (4")
1800 (72")	120 (3-1/2")

FOR S = 750 mm (30") AND LESS, USE 2 ANCHORS. OTHERWISE, USE 3 ANCHORS.

FOR S = 1200 mm (48") AND LESS, B = 75 mm (3") USE 64x51x9.5 (2-1/2"x2"x3/8") GALVANIZED STEEL ANGLE.

OTHERWISE, B = 100 mm (4"). USE 89x76x12.7 (3-1/2"x3"x1/2") GALVANIZED STEEL ANGLE.

J BARS ARE #10M (#3).

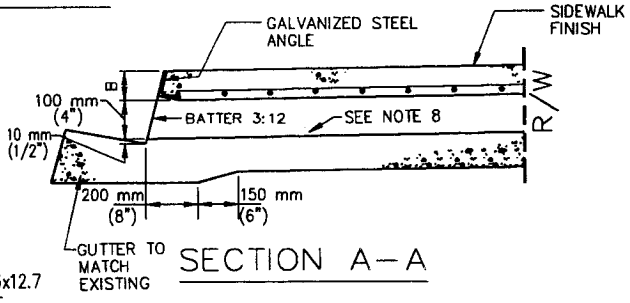

SECTION A–A

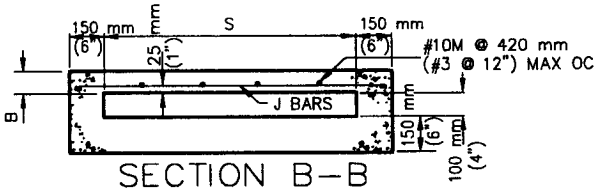

SECTION B–B

AMERICAN PUBLIC WORKS ASSOCIATION - SOUTHERN CALIFORNIA CHAPTER

PROMULGATED BY THE PUBLIC WORKS STANDARDS INC. GREENBOOK COMMITTEE 1993 REV. 1996

PARKWAY DRAIN

USE WITH STANDARD SPECIFICATIONS FOR PUBLIC WORKS CONSTRUCTION

STANDARD PLAN METRIC

151 - 1

SHEET 1 OF 2

NOTES

1. FLOOR OF BOX SHALL BE TROWLED SMOOTH.
2. IF THE TOE OF SLOPE IS ALLOWED WITHIN THE R/W, INLET TYPE 1 BEGINS AT THE TOE RATHER THAN AT THE R/W LINE.
3. FOR OPEN DITCH (TYPE 2), THE 600 mm (24") EXTENSION BEYOND THE R/W LINE IS NOT REQUIRED WHEN BACK OF WALK IS 600 mm (24") OR MORE FROM THE R/W LINE; HOWEVER, THE PIPE SHALL EXTEND TO THE R/W LINE IN ANY EVENT.
4. TOP OF INLET STRUCTURE (TYPE 1 & 2) SHALL BE FLUSH WITH ADJACENT SURFACE WHERE PRACTICAL.
5. A HEADED STEEL STUD 16 mm x 160 mm WITH A 25 mm HEAD (5/8" x 6-3/8", 1" HEAD) ATTACHED BY A FULL PENETRATION BUTT WELD MAY BE USED AS AN ALTERNATE ANCHOR.
6. NORMAL CURB FACE AT POINT M AND Q. CURB FACE IS B + 125 mm (5") AT POINT N AND P.
7. THE 75 mm (3") LEG OF THE 16 mm (5/8") DIA ANCHORS SHALL BE PARALLEL TO THE TOP OF SIDEWALK.
8. SLOPE = 2.0%.
9. DIMENSIONS SHOWN ON THIS PLAN FOR METRIC AND ENGLISH UNITS ARE NOT EXACTLY EQUAL VALUES. IF METRIC UNITS ARE USED, ALL VALUES USED FOR CONSTRUCTION SHALL BE METRIC VALUES. IF ENGLISH UNITS ARE USED, ALL VALUES USED FOR CONSTRUCTION SHALL BE ENGLISH VALUES. HOWEVER, ASTM 615 REINFORCING STEEL MAY BE SUBSTITUTED FOR ASTM 615M STEEL.

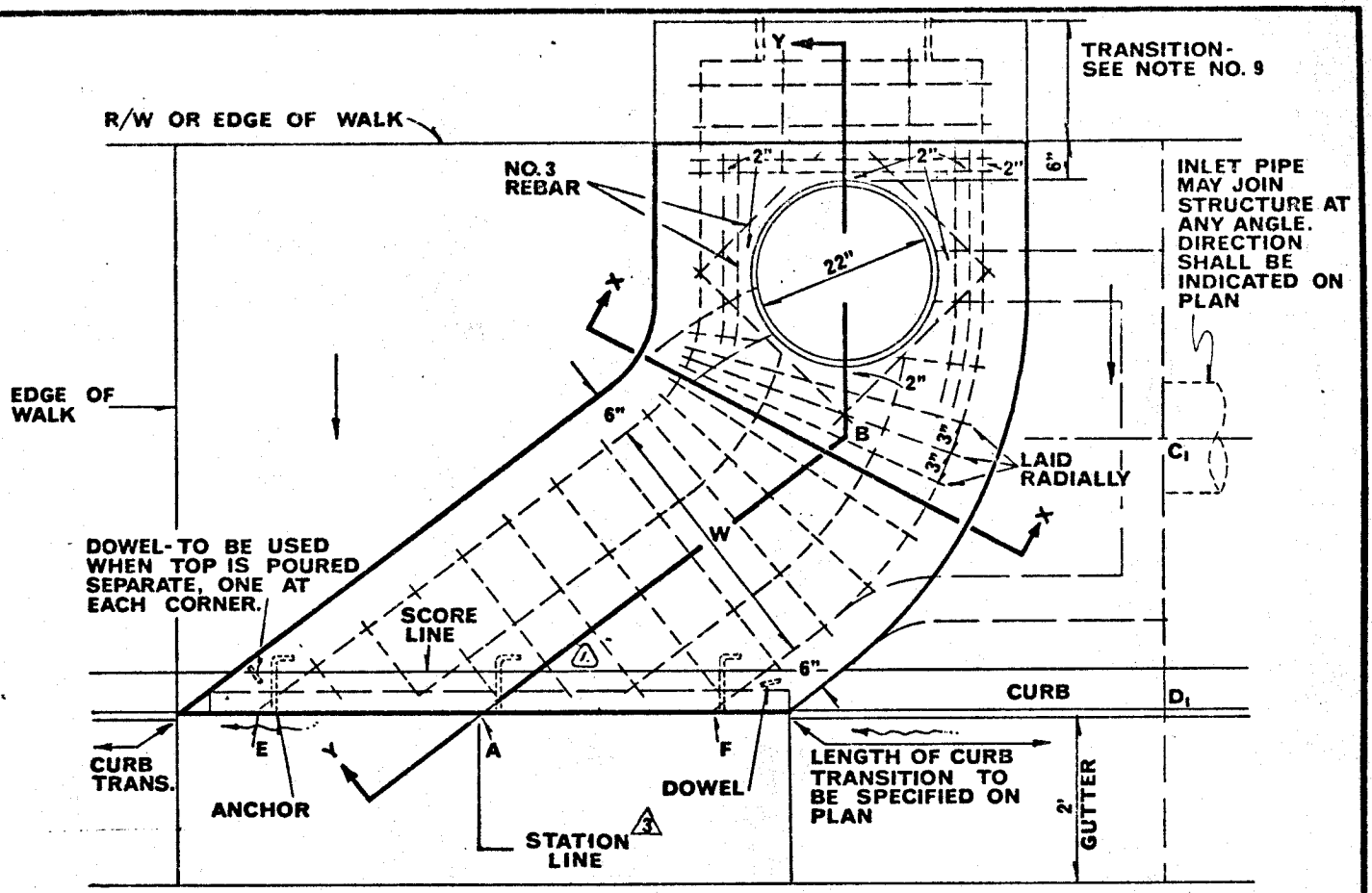

TOP VIEW

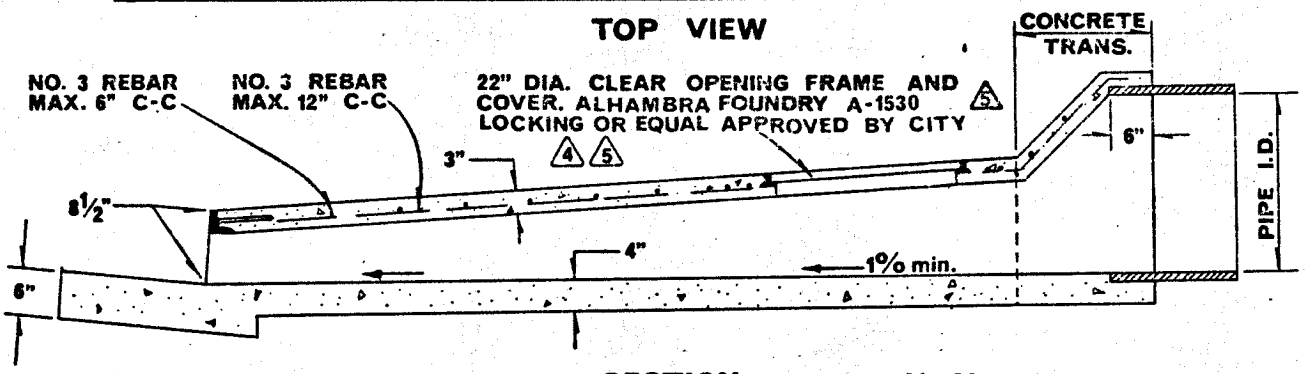

SECTION Y - Y

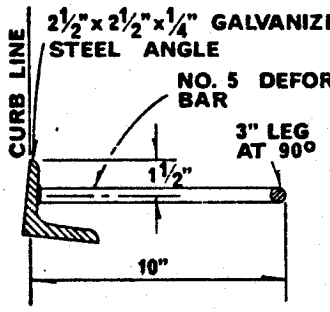

ANCHOR DETAIL

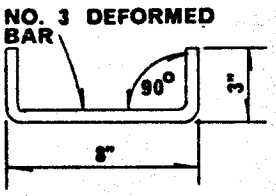

DOWEL DETAIL

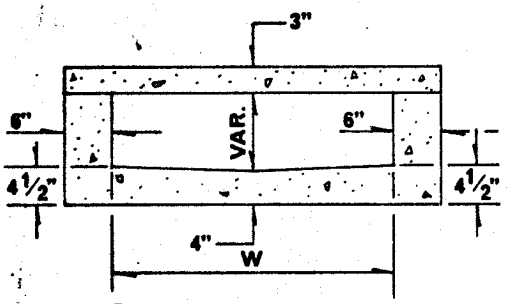

SECTION X - X

APPROVED [signature] DATE 3-8-74
PUBLIC WORKS DIRECTOR - R.C.E. 8134

MARK	REVISIONS	APPR.	DATE
1	Deleted Δ F-A-B	Wdy	7.5.74
2	Was R-1535	Wdy	8-25-80
3	Added Station Line		
4	Defined approval	DLR	4-7-82
5	Added Locking & Changed Riverside Fdy. to Alhambra	[illegible]	[illegible]

CITY OF RIVERSIDE

PUBLIC WORKS DEPT. - ENGINEERING DIV.

CURB OUTLET

STANDARD DRAWING NO. **410**

Sheet 1 of 2

NOTES:

1. Concrete shall be Class 560-C-3250. When structure is to be constructed within the limits of a proposed sidewalk or is contiguous to such sidewalk, the top of the structure shall be poured monolithic with the sidewalk, using the same class of concrete as in the sidewalk.

2. Dimensions shall be as follows unless otherwise specified on the plan:

   A-B = 5'
   C_1-D_1 = 3'
   E-F = 5'
   W = 3'

3. Floor of structure shall be given a steel-troweled finish and constructed on a straight grade from back of structure to gutter flow-line at point A. The V-section specified for invert shall extend from pipe outlet to a point 3' from the gutter, from which point the invert shall be warped to join the gutter flow-line at the structure.

4. Reinforcing steel bars shall be 1" from the bottom of the slab.

5. Sidewalk and curb appurtenant to the structure shall be included in the bid.

6. Surface of all exposed concrete shall conform to existing or proposed curb and walk adjacent to the structure.

7. Corrugated metal forms shall not be used for supporting the top slab.

8. Top of structure shall slope 2% toward curb except when otherwise shown on plan or to fit existing sidewalk.

9. Transition from pipe to structure, if required, to be in back of sidewalk. Dimensions of transition shall be specified on the plan.

APPROVED [signature] DATE 7/4/78
PUBLIC WORKS DIRECTOR - R.C.E. 18793

MARK	REVISIONS	APPR.	DATE
1	Concrete Class Revision	wdg	8-25-80

CITY OF RIVERSIDE
PUBLIC WORKS DEPT. - ENGINEERING DIV.

CURB OUTLET

STANDARD DRAWING NO. 410
Sheet 2 of 2

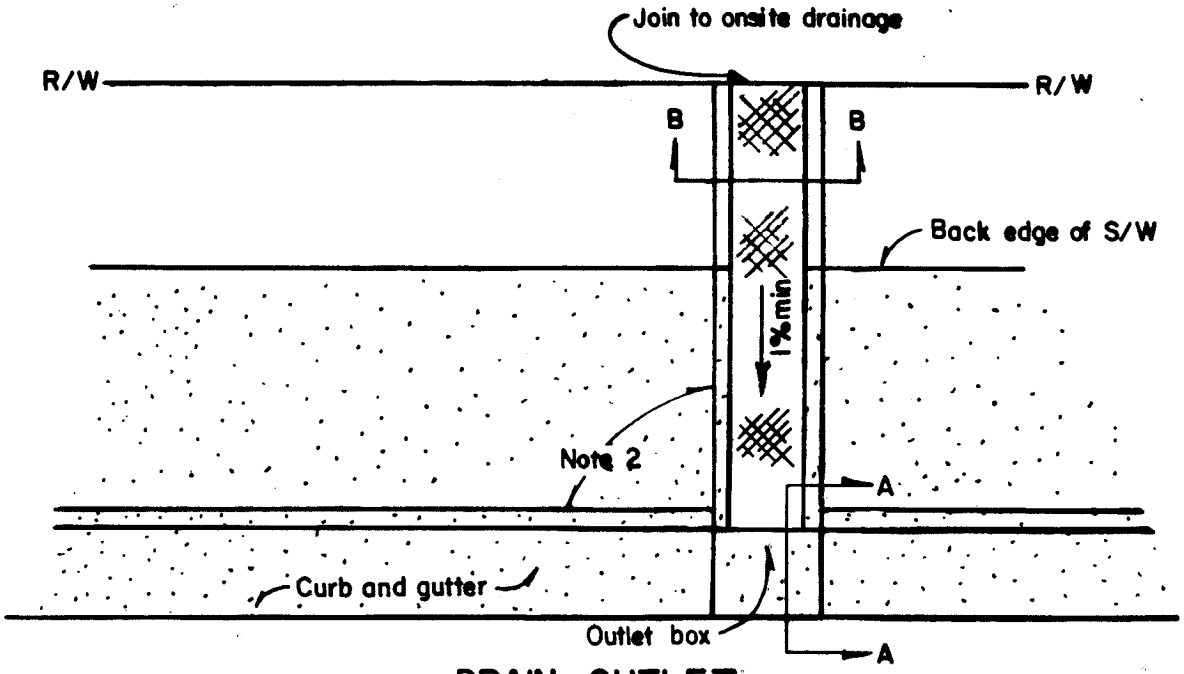

DRAIN OUTLET

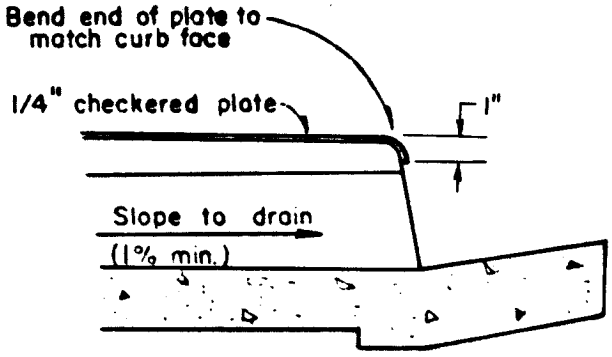

SECTION A-A

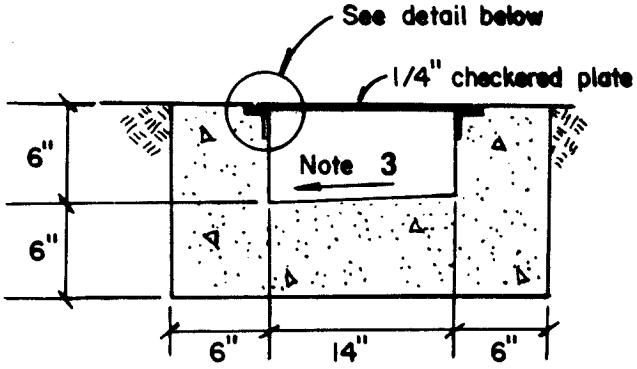

SECTION B-B

NOTES:

1. For low flows a 6" cast iron pipe may be substituted where curb is greater than or equal to 8". △1
2. Under sidewalk drain to be constructed at 90° ∡. Variations from 90° require approval of the City Engineer.
3. Slope to drain to one side.
4. All exposed metal parts to be galvanized after fabrication.
5. 1 1/2" X 1 1/2" X 1/4" "L" frame with 3/8" X 1/4" steel strip welded to frame.
6. Checkered plate may be aluminum or galvanized steel.
7. Fasten with 1/4" coarse-thread flat head metal screw at △2 24" O.C.

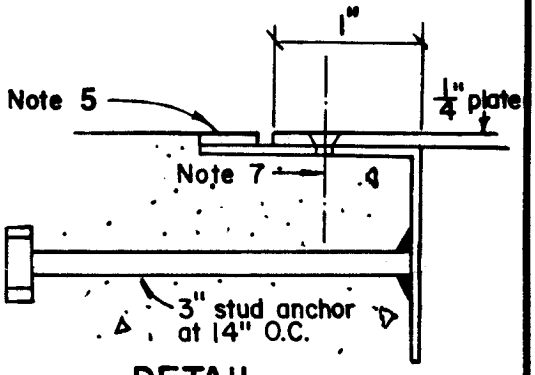

DETAIL

APPROVED William A. [illegible] DATE 6-29-92
for PUBLIC WORKS DIRECTOR - R.C.E. 10798

MARK	REVISIONS	APPR.	DATE
△1	ADDED RESTRICTION ON CURB HT; ELIMINATED SEC. A-A.	[illegible]	10-7-93
△2	CHANGED 8" O.C. TO 24" O.C.; ADDED SECTION A-A.	[illegible]	[illegible]

CITY OF RIVERSIDE
PUBLIC WORKS DEPT. - ENGINEERING DIV.

UNDER SIDEWALK DRAIN

STANDARD DRAWING NO. 411

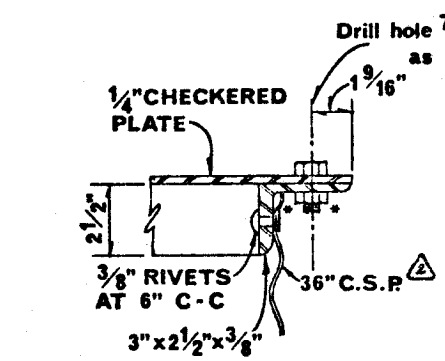

* Field Weld each nut to angle

Plate and Angle shall be galvanized

DETAIL "A"

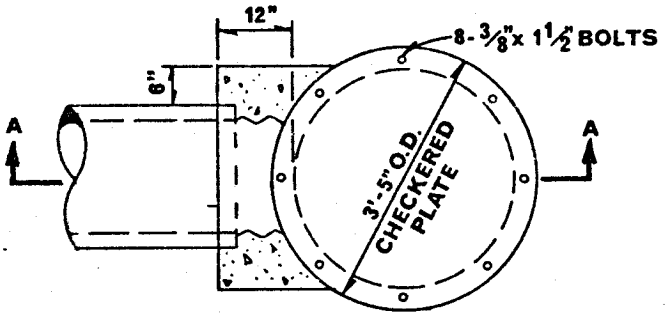

PLAN

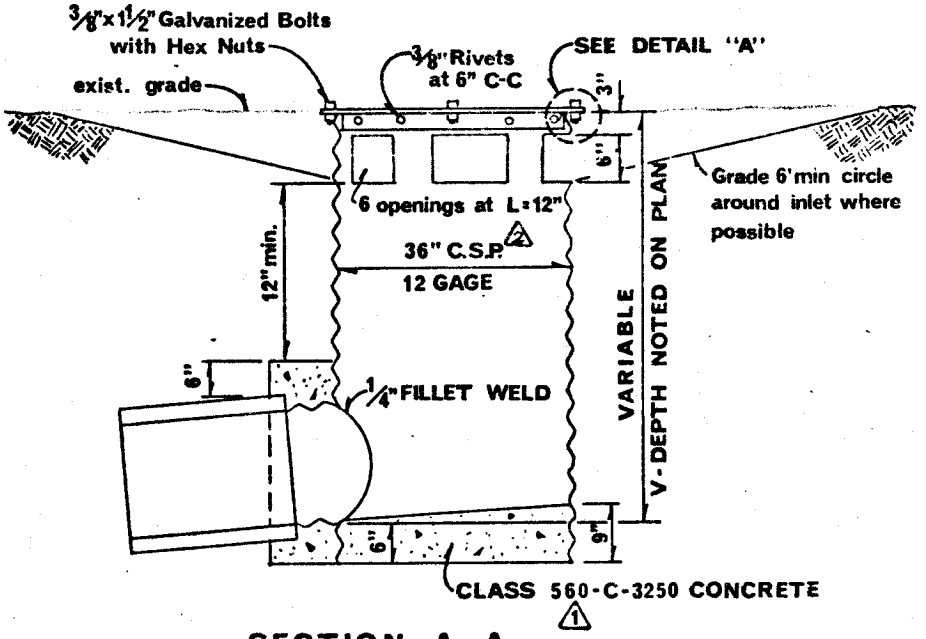

SECTION A-A

APPROVED [signature] DATE 7-24-78

PUBLIC WORKS DIRECTOR - R.C.E. 8134

MARK	REVISIONS	APPR.	DATE
1	revised concrete class	[illegible]	7-25-78
2	changed CMP to CSP	[illegible]	10-26-82

CITY OF RIVERSIDE

PUBLIC WORKS DEPT. - ENGINEERING DIV.

C.S.P. 2 INLET

STANDARD DRAWING NO. 412

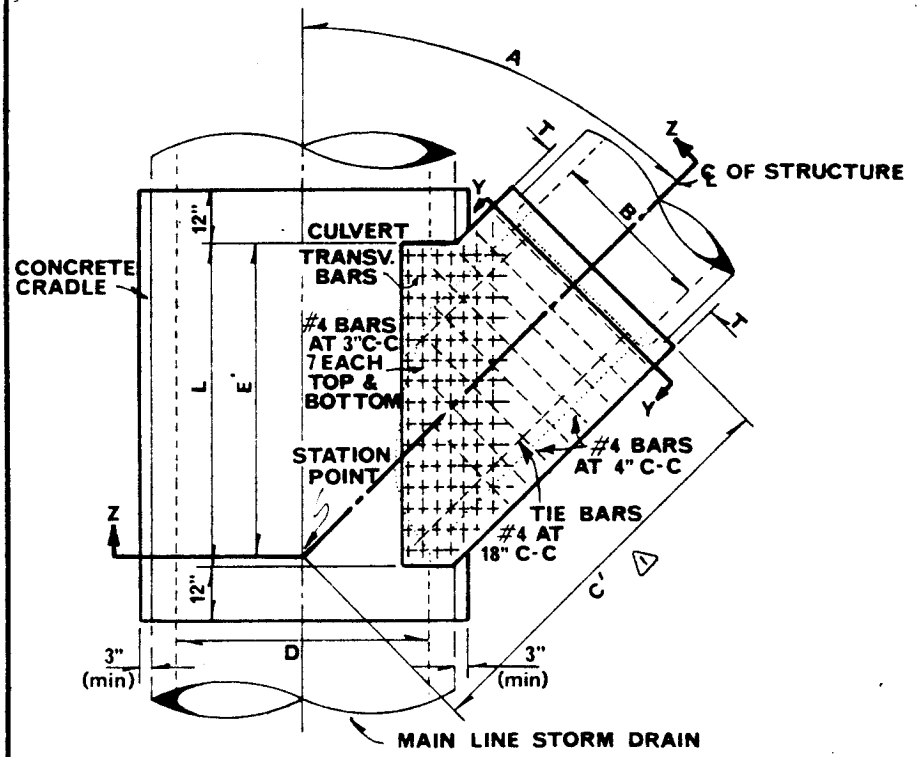

PLAN

TABLE OF VALUES FOR T	
B	T
12"	4"
15"	4 1/4"
18"	4 1/2"
21"	5"
24"	5 1/4"
27"	5 1/2"
30"	6"
33"	6 1/4"
36"	6 1/2"
39"	7"

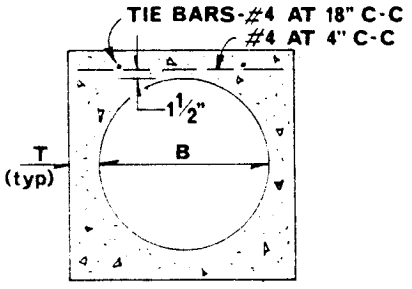

SECTION Y-Y

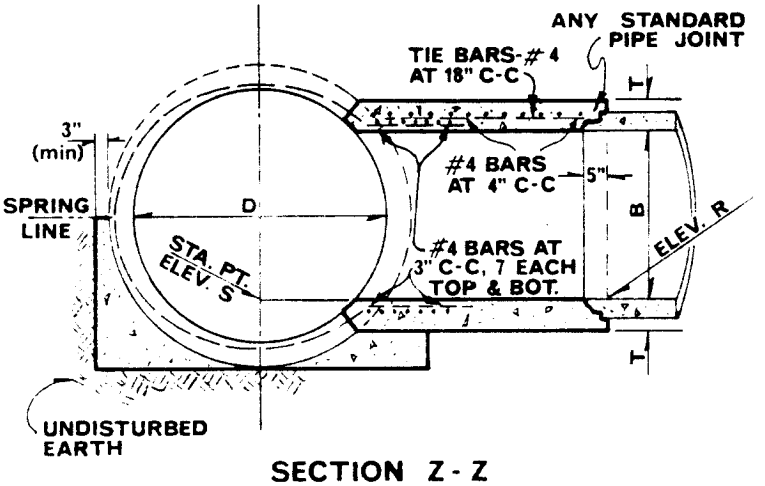

SECTION Z-Z

NOTES:

1. Values for A,B,C',D,E' & L, elevations R and S shown on improvement plan. (See Sheet 2 of 2.)
2. Cradle may be omitted on side opposite lateral inlet when connecting with existing storm drain pipe.
3. Transverse reinforcement in pipe shall be cut in center of opening and bent to uniform distance from top and bottom of junction structure.
4. Concrete shall be class 560 - C - 3250.
5. Reinforcing steel shall be 1.5" clear from face of concrete.
6. Floor of structure shall be steel-troweled to spring line.

APPROVED Robert C. Wilson DATE 7/14/72
PUBLIC WORKS DIRECTOR - R.C.E. 18793

MARK	REVISIONS	APPR.	DATE
1	Added Notations		3/7/84

CITY OF RIVERSIDE
PUBLIC WORKS DEPT. - ENGINEERING DIV.

JUNCTION STRUCTURE B

STANDARD DRAWING NO. **421**

Sheet 1 of 2

STORM DRAIN MAIN

D (IN)	ANGLE VALUE	30	40	50	60	70	80
12	C	2.2	1.8	1.6	1.5	1.4	1.3
	E	1.4	1.0	0.7	0.5	0.3	0.1
15	C	2.5	2.0	1.8	1.6	1.5	1.5
	E	1.7	1.2	0.8	0.6	0.4	0.2
18	C	2.8	2.3	2.0	1.8	1.7	1.6
	E	1.9	1.3	0.9	0.6	0.4	0.2
21	C	3.1	2.5	2.2	2.0	1.9	1.8
	E	2.2	1.5	1.1	0.7	0.5	0.2
24	C	3.4	2.7	2.4	2.2	2.0	2.0
	E	2.5	1.7	1.2	0.8	0.5	0.3
27	C	3.7	3.0	2.6	2.3	2.2	2.1
	E	2.7	1.9	1.3	0.9	0.6	0.3
30	C	4.0	3.2	2.8	2.5	2.4	2.3
	E	3.0	2.1	1.5	1.0	0.6	0.3
33	C	4.3	3.4	3.0	2.7	2.5	2.4
	E	3.3	2.3	1.6	1.1	0.7	0.3
36	C	4.6	3.7	3.2	2.9	2.7	2.6
	E	3.5	2.4	1.7	1.2	0.7	0.4
39	C	4.9	3.9	3.4	3.0	2.9	2.7
	E	3.8	2.6	1.9	1.3	0.8	0.4
42	C	5.3	4.2	3.6	3.2	3.0	2.9
	E	4.1	2.8	2.0	1.4	0.9	0.4
45	C	5.5	4.4	3.8	3.4	3.2	3.1
	E	4.4	3.0	2.1	1.5	0.9	0.4
48	C	5.8	4.6	4.0	3.6	3.3	3.2
	E	4.6	3.2	2.2	1.5	1.0	0.5
51	C	6.2	4.9	4.2	3.8	3.5	3.4
	E	4.9	3.4	2.4	1.6	1.0	0.5
54	C	6.5	5.2	4.4	4.0	3.7	3.5
	E	5.2	3.6	2.5	1.7	1.1	0.5
57	C	6.8	5.4	4.6	4.1	3.8	3.7
	E	5.4	3.7	2.6	1.8	1.1	0.6
60	C	7.1	5.6	4.8	4.3	4.0	3.8
	E	5.7	3.9	2.8	1.9	1.2	0.6
63	C	7.4	5.9	5.0	4.5	4.2	4.0
	E	6.0	4.1	2.9	2.0	1.3	0.6
66	C	7.7	6.1	5.2	4.7	4.3	4.2
	E	6.2	4.3	3.0	2.1	1.3	0.6
69	C	8.0	6.4	5.4	4.9	4.5	4.3
	E	6.5	4.5	3.2	2.2	1.4	0.7
72	C	8.3	6.6	5.6	5.0	4.7	4.5
	E	6.8	4.7	3.3	2.3	1.4	0.7
75	C	8.6	6.8	5.8	5.2	4.8	4.6
	E	7.0	4.8	3.4	2.3	1.5	0.7
78	C	9.0	7.1	6.0	5.4	5.0	4.8
	E	7.3	5.0	3.5	2.4	1.5	0.7
81	C	9.3	7.3	6.2	5.6	5.2	4.9
	E	7.6	5.2	3.7	2.5	1.6	0.8
84	C	9.6	7.6	6.4	5.7	5.3	5.1
	E	7.9	5.4	3.8	2.6	1.7	0.8
87	C	9.9	7.8	6.6	5.9	5.5	5.3
	E	8.1	5.6	3.9	2.7	1.7	0.8
90	C	10.2	8.1	6.8	6.1	5.7	5.4
	E	8.4	5.8	4.1	2.8	1.8	0.9
93	C	10.5	8.3	7.0	6.3	5.8	5.6
	E	8.7	6.0	4.2	2.9	1.8	0.9
96	C	10.8	8.5	7.2	6.5	6.0	5.7
	E	8.9	6.2	4.3	3.0	1.9	0.9

STORM DRAIN LATERAL

B (IN)	ANGLE VALUE	30	40	50	60	70	80
12	C	1.4	1.0	0.7	0.5	0.3	0.1
	E	1.7	1.3	1.1	1.0	0.9	0.8
	L	3.3	2.6	2.2	1.9	1.8	1.7
15	C	1.7	1.2	0.8	0.6	0.4	0.2
	E	2.0	1.5	1.3	1.1	1.0	1.0
	L	3.9	3.0	2.6	2.3	2.1	2.0
18	C	1.9	1.3	0.9	0.6	0.4	0.2
	E	2.3	1.8	1.5	1.3	1.2	1.1
	L	4.5	3.5	2.9	2.6	2.4	2.3
21	C	2.2	1.5	1.1	0.7	0.5	0.2
	E	2.6	2.0	1.7	1.5	1.4	1.3
	L	5.2	4.0	3.4	3.0	2.7	2.6
24	C	2.5	1.7	1.2	0.8	0.5	0.3
	E	2.9	2.2	1.9	1.7	1.5	1.5
	L	5.8	4.5	3.8	3.3	3.1	2.9
27	C	2.7	1.9	1.3	0.9	0.6	0.3
	E	3.2	2.5	2.1	1.8	1.7	1.6
	L	6.3	4.9	4.1	3.7	3.4	3.2
30	C	3.0	2.1	1.5	1.0	0.6	0.3
	E	3.5	2.7	2.3	2.0	1.9	1.8
	L	7.0	5.4	4.6	4.0	3.7	3.6
33	C	3.3	2.3	1.6	1.1	0.7	0.3
	E	3.8	2.9	2.5	2.2	2.0	1.9
	L	7.6	5.9	4.9	4.4	4.0	3.9
36	C	3.5	2.4	1.7	1.2	0.7	0.4
	E	4.1	3.2	2.7	2.4	2.2	2.1
	L	8.2	6.4	5.3	4.7	4.3	4.1
39	C	3.8	2.6	1.9	1.3	0.8	0.4
	E	4.4	3.4	2.9	2.5	2.4	2.2
	L	8.8	6.9	5.8	5.1	4.7	4.5
42	C	4.1	2.8	2.0	1.4	0.9	0.4
	E	4.8	3.7	3.1	2.7	2.5	2.4
	L	9.5	7.4	6.2	5.5	5.1	4.8

⚠

EXAMPLE:

Given D = 36" A = 60° B = 27"
Find L, C', E'

Solution:

1. Enter Storm Drain Main Table with the given D & A:

   C_M = 2.9' E_M = 1.2'

2. Enter Storm Drain Lateral Table with the given B & A:

   C_L = 0.9' E_L = 1.8' L = 3.7'

3. $C' = C_M + C_L$
   C' = 2.9 ft. + 0.9 ft. = 3.8 ft.

4. $E' = E_M + E_L$
   E' = 1.2 ft. + 1.8 ft. = 3.0 ft.

APPROVED [signature] DATE 12/27/84
PUBLIC WORKS DIRECTOR - R.C.E. 18793

MARK	REVISIONS	APPR.	DATE
1	CORRECTED VALUES	[illegible]	2-23-86

CITY OF RIVERSIDE
PUBLIC WORKS DEPT. - ENGINEERING DIV.

JUNCTION STRUCTURE B

STANDARD DRAWING NO. **421**
Sheet 2 of 2

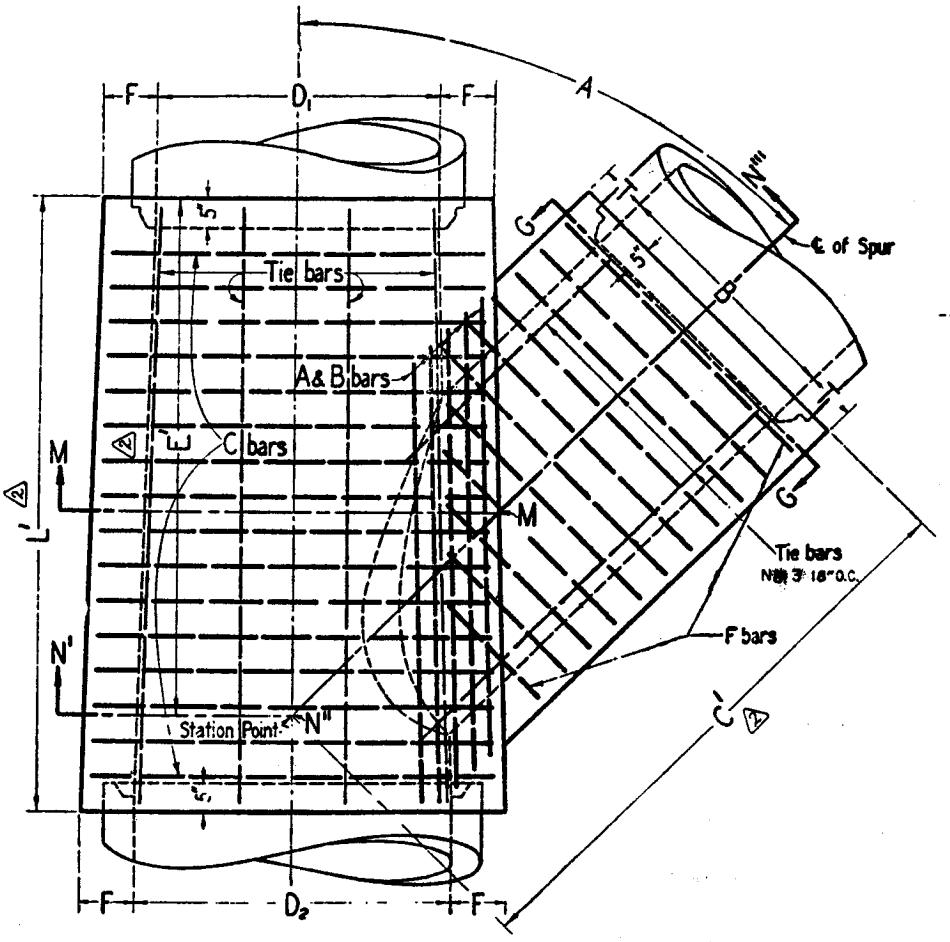

PLAN

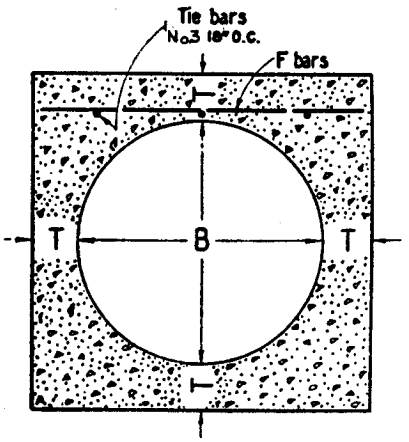

SECTION G-G

TABLE OF VALUES FOR F AND T

D_2	F
12"	4"
15"	4¼"
18"	4½"
21"	5"
24"	5¼"
27"	5½"
30"	6"
33"	6¼"
36"	6½"
39"	7"
42"	7½"
45"	7¾"
48"	8"
51"	8½"
54"	9"
57"	9¼"
60"	9½"
63"	10"
66"	10¼"
69"	10¾"
72"	11"
78"	11¾"
84"	12½"
90"	13¾"
96"	14"

B	T
12"	4"
15"	4¼"
18"	4½"
21"	5"
24"	5¼"
27"	5½"
30"	6"
33"	6¼"
36"	6½"
39"	7"
42"	7½"
45"	7¾"
48"	8"
51"	8½"
54"	9"
57"	9¼"
60"	9½"
63"	10"
66"	10¼"
69"	10¾"
72"	11"

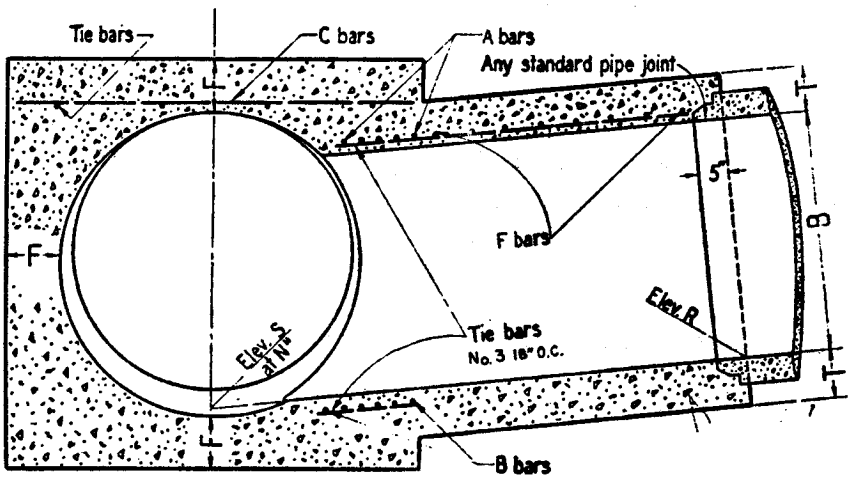

SECTION N'-N''-N'''
Projected on M-M-N'''

CONCRETE SPECS	
T	CONCRETE CLASS
4" - 9½"	560 - C - 3250
10" - 11"	560 - B - 3250

TABLE OF BAR SIZES		
D2 or B	A & B bars	D or F bars
12"-39"	No 5 at 3"	No. 4 at 6"
42"-84"	No. 6 at 3"	No. 5 at 6"
90"-144"	No. 7 at 3"	No. 6 at 6"

APPROVED Robert C. Wales DATE 7/14/78
PUBLIC WORKS DIRECTOR - R.C.E. 18793

MARK	REVISIONS	APPR.	DATE
1	Added Table of Bar Sizes		11-9-82
2	ADDED: PRIME NOTATION TO L, E, & C ON PLAN VIEW, AND [illegible]		[illegible]

CITY OF RIVERSIDE
PUBLIC WORKS DEPT. - ENGINEERING DIV.

JUNCTION STRUCTURE C

STANDARD DRAWING NO. **422**
Sheet 1 of 3

NOTES

1 - VALUES for A,B,C',D1,D2,E',L', Elevation R, and Elevation S are shown on Improvement Plan (see sheet 3 of 3). TABLE of values for F and T shown on this Standard Drawing, Sheet 1. (2)

2 - OPTIONAL CONSTRUCTION: When Juction Structure B is specified on improvement plan, the Contractor shall have the option of constructing Junction Structure C, in which case construction data will be furnished by the City Engineer. (1)

3 - CONCRETE shall be in accordance with the table on Sheet 1.

4 - FLOOR of structure shall be steel-troweled to springing line.

5 - REINFORCING STEEL shall be round, deformed, straight bars, 1 1/2" clear from face of concrete unless otherwise shown.

Tie bars shall be No. 3 and spaced 18" on centers or closer.

A and B bars need not be longer than the outside diagonal width of the lateral spur.

6 - STEEL SCHEDULE detailed on improvement plan.

7 - ELEVATION S applies at center of main line on prolongation of invert of spur.

8 - JUNCTION STRUCTURE shall be poured in one continuous operation, except that the Contractor shall have the option of placing at the springing line a construction joint with a longitudinal keyway.

9 - LENGTH L (shown on improvement plan) may be increased at option of Contractor to meet pipe ends, using C bars in extended portion of same diameter and spacing as specified on improvement plan, but any change in location of SPUR must be approved by the City Engineer. (1)

10- STATIONS of manholes shown on improvement plan apply at intersection of main line and spur. Elevations shown at this point refer to prolonged invert grade lines, except that when intersection of center lines falls outside of structure, the elevations are shown and apply at extreme lower end of the structure.

11- LATERALS - Where laterals enter on both sides of structure, they shall be designated on the improvement plan as right or left, facing in the direction of stationing.

(Adapted from City of Los Angeles Std. Plan No. B-1832)

APPROVED Robert L. Wales DATE 7/17/78
PUBLIC WORKS DIRECTOR - R.C.E. 18793

MARK	REVISIONS	APPR.	DATE
1	Defined Engineer	DLR	4-7-82
2	Added Sheet 3	[illegible]	12/27/84

CITY OF RIVERSIDE
PUBLIC WORKS DEPT. - ENGINEERING DIV.

JUNCTION STRUCTURE C

STANDARD DRAWING NO. 422
Sheet 2 of 3

STORM DRAIN MAIN

B	ANGLE / VALUE	30	40	50	60	70	80
12	C	2.2	1.8	1.6	1.5	1.4	1.3
	E	1.9	1.5	1.2	1.0	0.8	0.6
15	C	2.5	2.0	1.8	1.6	1.5	1.5
	E	2.2	1.7	1.3	1.1	0.9	0.7
18	C	2.8	2.3	2.0	1.8	1.7	1.6
	E	2.4	1.8	1.4	1.1	0.9	0.7
21	C	3.1	2.5	2.2	2.0	1.9	1.8
	E	2.7	2.0	1.6	1.2	1.0	0.7
24	C	3.4	2.7	2.4	2.2	2.0	2.0
	E	3.0	2.2	1.7	1.3	1.0	0.8
27	C	3.7	3.0	2.6	2.3	2.2	2.1
	E	3.2	2.4	1.8	1.4	1.1	0.8
30	C	4.0	3.2	2.8	2.5	2.4	2.3
	E	3.5	2.6	2.0	1.5	1.1	0.8
33	C	4.3	3.4	3.0	2.7	2.5	2.4
	E	3.8	2.8	2.1	1.6	1.2	0.8
36	C	4.6	3.7	3.2	2.9	2.7	2.6
	E	4.0	2.9	2.2	1.7	1.2	0.9
39	C	4.9	3.9	3.4	3.0	2.9	2.7
	E	4.3	3.1	2.4	1.8	1.3	0.9
42	C	5.3	4.2	3.6	3.2	3.0	2.9
	E	4.6	3.3	2.5	1.9	1.4	0.9
45	C	5.5	4.4	3.8	3.4	3.2	3.1
	E	4.9	3.5	2.6	2.0	1.4	0.9
48	C	5.8	4.6	4.0	3.6	3.3	3.2
	E	5.1	3.7	2.7	2.0	1.5	1.0
51	C	6.2	4.9	4.2	3.8	3.5	3.4
	E	5.4	3.9	2.9	2.1	1.5	1.0
54	C	6.5	5.2	4.4	4.0	3.7	3.5
	E	5.7	4.1	3.0	2.2	1.6	1.0
57	C	6.8	5.4	4.6	4.1	3.8	3.7
	E	5.9	4.2	3.1	2.3	1.6	1.1
60	C	7.1	5.6	4.8	4.3	4.0	3.8
	E	6.2	4.4	3.3	2.4	1.7	1.1
63	C	7.4	5.9	5.0	4.5	4.2	4.0
	E	6.5	4.6	3.4	2.5	1.8	1.1
66	C	7.7	6.1	5.2	4.7	4.3	4.2
	E	6.7	4.8	3.5	2.6	1.8	1.1
69	C	8.0	6.4	5.4	4.9	4.5	4.3
	E	7.0	5.0	3.7	2.7	1.9	1.2
72	C	8.3	6.6	5.6	5.0	4.7	4.5
	E	7.3	5.2	3.8	2.8	1.9	1.2
75	C	8.6	6.8	5.8	5.2	4.8	4.6
	E	7.5	5.3	3.9	2.8	2.0	1.2
78	C	9.0	7.1	6.0	5.4	5.0	4.8
	E	7.8	5.5	4.0	2.9	2.0	1.2
81	C	9.3	7.3	6.2	5.6	5.2	4.9
	E	8.1	5.7	4.2	3.0	2.1	1.3
84	C	9.6	7.6	6.4	5.7	5.3	5.1
	E	8.4	5.9	4.3	3.1	2.2	1.3
87	C	9.9	7.8	6.6	5.9	5.5	5.3
	E	8.6	6.1	4.4	3.2	2.2	1.3
90	C	10.2	8.1	6.8	6.1	5.7	5.4
	E	8.9	6.3	4.6	3.3	2.3	1.4
93	C	10.5	8.3	7.0	6.3	5.8	5.6
	E	9.2	6.5	4.7	3.4	2.3	1.4
96	C	10.8	8.5	7.2	6.5	6.0	5.7
	E	9.4	6.7	4.8	3.5	2.4	1.4

STORM DRAIN LATERAL

B	ANGLE / VALUE	30	40	50	60	[illegible]	[illegible]
12	C	1.9	1.5	1.2	1.0	0.8	0.6
	E	2.2	1.8	1.6	1.5	1.4	1.3
15	C	2.2	1.7	1.3	1.1	0.9	0.7
	E	2.5	2.0	1.8	1.6	1.5	1.5
18	C	2.4	1.8	1.4	1.1	0.9	0.7
	E	2.8	2.3	2.0	1.8	1.7	1.6
21	C	2.7	2.0	1.6	1.2	1.0	0.7
	E	3.1	2.5	2.2	2.0	1.9	1.8
24	C	3.0	2.2	1.7	1.3	1.0	0.8
	E	3.4	2.7	2.4	2.2	2.0	2.0
27	C	3.2	2.4	1.8	1.4	1.1	0.8
	E	3.7	3.0	2.6	2.3	2.2	2.1
30	C	3.5	2.6	2.0	1.5	1.1	0.8
	E	4.0	3.2	2.8	2.5	2.4	2.3
33	C	3.8	2.8	2.1	1.6	1.2	0.8
	E	4.3	3.4	3.0	2.7	2.5	2.4
36	C	4.0	2.9	2.2	1.7	1.2	0.9
	E	4.6	3.7	3.2	2.9	2.7	2.6
39	C	4.3	3.1	2.4	1.8	1.3	0.9
	E	4.9	3.9	3.4	3.0	2.9	2.7
42	C	4.6	3.3	2.5	1.9	1.4	0.9
	E	5.3	4.2	3.6	3.2	3.0	2.9
45	C	4.9	3.5	2.6	2.0	1.4	0.9
	E	5.5	4.4	3.8	3.4	3.2	3.1
48	C	5.1	3.7	2.7	2.0	1.5	1.0
	E	5.8	4.6	4.0	3.6	3.3	3.2
51	C	5.4	3.9	2.9	2.1	1.5	1.0
	E	6.2	4.9	4.2	3.8	3.5	3.4
54	C	5.7	4.1	3.0	2.2	1.6	1.0
	E	6.5	5.2	4.4	4.0	3.7	3.5
57	C	5.9	4.2	3.1	2.3	1.6	1.1
	E	6.8	5.4	4.6	4.1	3.8	3.7
60	C	6.2	4.4	3.3	2.4	1.7	1.1
	E	7.1	5.6	4.8	4.3	4.0	3.8
63	C	6.5	4.6	3.4	2.5	1.8	1.1
	E	7.4	5.9	5.0	4.5	4.2	4.0
66	C	6.7	4.8	3.5	2.6	1.8	1.1
	E	7.7	6.1	5.2	4.7	4.3	4.2
69	C	7.0	5.0	3.7	2.7	1.9	1.2
	E	8.0	6.4	5.4	4.9	4.5	4.3
72	C	7.3	5.2	3.8	2.8	1.9	1.2
	E	8.3	6.6	5.6	5.0	4.7	4.5
75	C	7.5	5.3	3.9	2.8	2.0	1.2
	E	8.6	6.8	5.8	5.2	4.8	4.6
78	C	7.8	5.5	4.0	2.9	2.0	1.2
	E	9.0	7.1	6.0	5.4	5.0	4.8
81	C	8.1	5.7	4.2	3.0	2.1	1.3
	E	9.3	7.3	6.2	5.6	5.2	4.9
84	C	8.4	5.9	4.3	3.1	2.2	1.3
	E	9.6	7.6	6.4	5.7	5.3	5.1
87	C	8.6	6.1	4.4	3.2	2.2	1.3
	E	9.9	7.8	6.6	5.9	5.5	5.3

EXAMPLE:

Given:

D_2 = 60"

B = 39"

A = 50°

Find: C', E', & L'

SOLUTION:

1. Enter Storm Drain Main Table with Given D_2 & A. C_M = 4.8 ft. E_M = 3.3 ft.

2. Enter Storm Drain Lateral Table with Given B & A. C_L = 2.4 ft. E_L = 3.4 ft.

3. $C' = C_M + C_L$ = 4.8 ft. + 2.4 ft. = 7.2 ft.

4. $E' = E_M + E_L$ = 3.3 ft. + 3.4 ft. = 6.7 ft.

5. L' = E' + 1 ft. = 6.7 ft. + 1 ft. = 7.7 ft.

APPROVED [signature] DATE 12/27/84

PUBLIC WORKS DIRECTOR - R.C.E. 18793

MARK	REVISIONS	APPR.	DATE
1	CORRECTED VALUES & CHANGED EQUATION	[illegible]	12-23-86

CITY OF RIVERSIDE

PUBLIC WORKS DEPT. - ENGINEERING DIV.

JUNCTION STRUCTURE C

STANDARD DRAWING NO. 422

Sheet 3 of 3

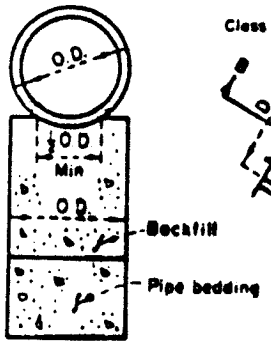

SECTION C-C

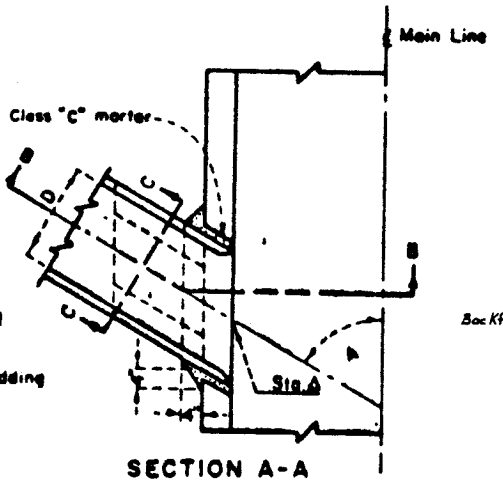

SECTION A-A

CASE 1

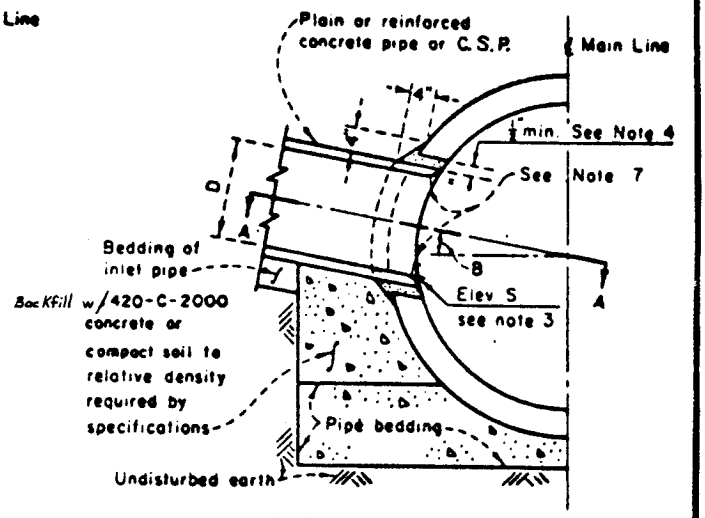

SECTION B-B

CASE 1

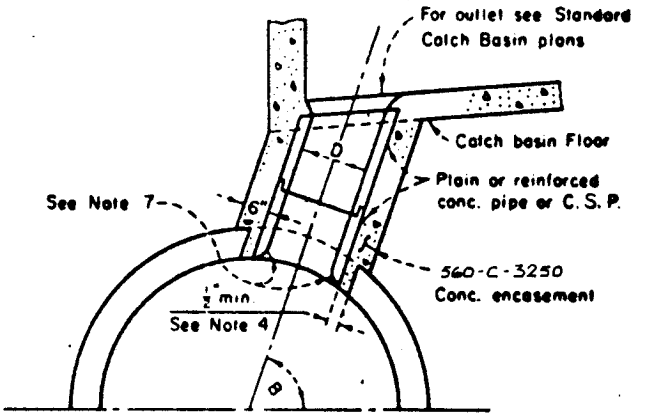

CASE 2

Note: All connector pipes (within the angles specified for Case 2) shall be encased when laid within the main line excavated trench, or when laid on fill which has not been densified.

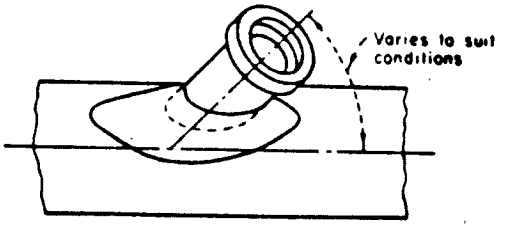

PLAN

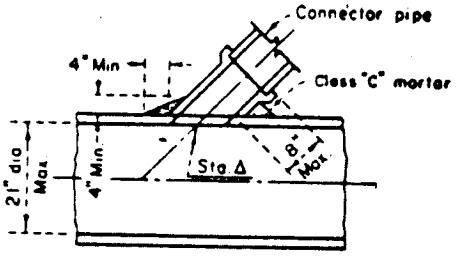

SECTION

CASE 3 - SADDLE CONNECTION

BLD

APPROVED [signature] DATE 11/9/82
PUBLIC WORKS DIRECTOR - R.C.E. 18793

MARK	REVISIONS	APPR.	DATE

CITY OF RIVERSIDE

PUBLIC WORKS DEPT. - ENGINEERING DIV.

JUNCTION STRUCTURE NO. 4

STANDARD DRAWING NO. **423**

SHT 1 OF 2

LACFCD No 2-D/93

NOTES: CASE 1 AND CASE 2

1. Angle A shall be between 45 degrees and 90 degrees and D shall be 24" or less. For smaller values of A and larger values of D, use appropriate standard structure.

2. In no case shall the outside diameter of the inlet pipe exceed ½ the inside diameter of the main storm drain.

3. Center line of inlet shall be on radius of main storm drain except where Elevation S is shown on project drawings.

4. The opening into the main storm drain shall be the outside diameter of the inlet pipe plus one inch minimum or 3 inch maximum.

5. All corrugated metal pipe and fittings shall be galvanized.

6. If Angle B is 45 degrees or less, use Case 1. If Angle B is greater than 45 degrees, use Case 2.

7. Burn or chip end of connector pipe flush with inner surface of mainline pipe. Round edge of concrete pipe or reinforced concrete pipe.

8. Station specified on drawings applies at the intersection of inside wall of main storm drain and center line of inlet pipe.

NOTES: CASE 3

1. Connections to pipes 21" or less in diameter without junction structures or precast Y branches shall be made with saddles.

2. Trim or cut saddle to fit snugly over the outside of the main pipe, and so its axis will be on the line and grade of the connecting pipe.

3. The opening into the pipe shall be cut and trimmed to fit the saddle so that no part will project within the bore of the saddle pipe.

4. The connecting pipe shall be supported as shown in Cases 1 & 2.

APPROVED [signature] DATE 11/9/82
PUBLIC WORKS DIRECTOR - R.C.E. 18793

MARK	REVISIONS	APPR.	DATE

CITY OF RIVERSIDE
PUBLIC WORKS DEPT. - ENGINEERING DIV.

JUNCTION STRUCTURE NO. 4

STANDARD DRAWING NO. 423
SHT 2 OF 2

LACFCD No 2-D193

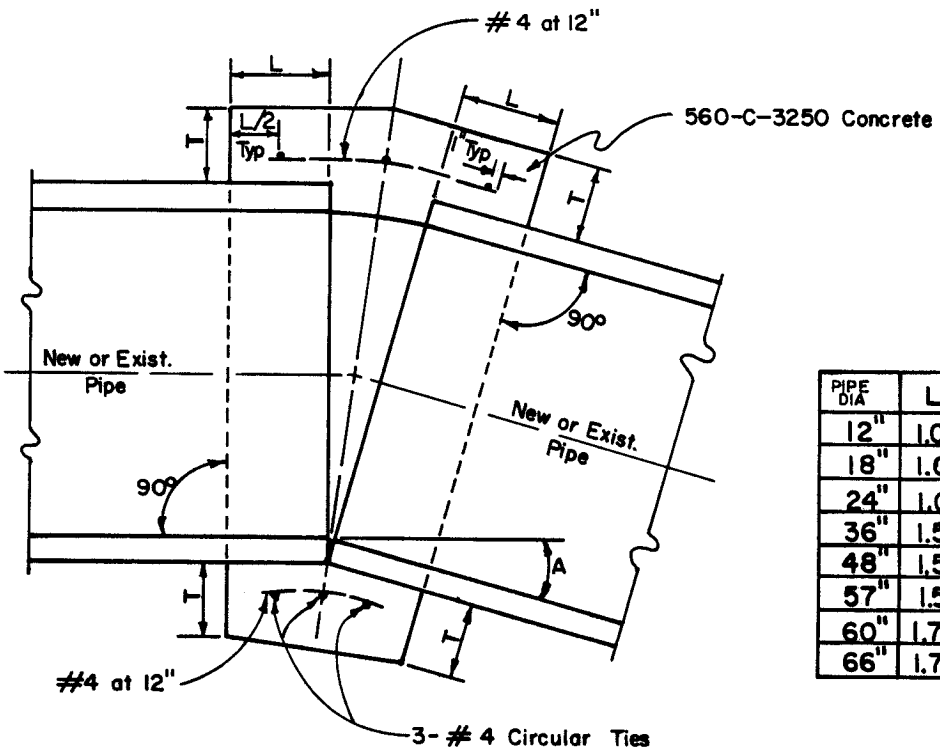

PIPE DIA	L	T
12"	1.0'	4"
18"	1.0'	5"
24"	1.0'	6"
36"	1.5'	8"
48"	1.5'	10"
57"	1.5'	10"
60"	1.75'	11"
66"	1.75'	11"

NOTES:

1. A concrete collar is required where the change in grade exceeds 0.10 ft. per foot.
2. For pipe size not listed use next size larger.
3. Omit reinforcing on pipes 24" and less in diameter and on all pipes where angle A is less than 10°.
4. Where reinforcing is required the diameter of the circular ties shall be the pipe diameter + (2 x wall thickness) + 8".
5. Pipe may be concrete pipe, reinforced concrete pipe, or asbestos cement pipe.

APPROVED [signature] DATE 11/9/82
PUBLIC WORKS DIRECTOR - R.C.E. 18793

MARK	REVISIONS	APPR.	DATE

CITY OF RIVERSIDE
PUBLIC WORKS DEPT. - ENGINEERING DIV.

CONCRETE COLLAR
(PIPES 12"- 66")

STANDARD DRAWING NO. 424

LAOFCD 2-D395

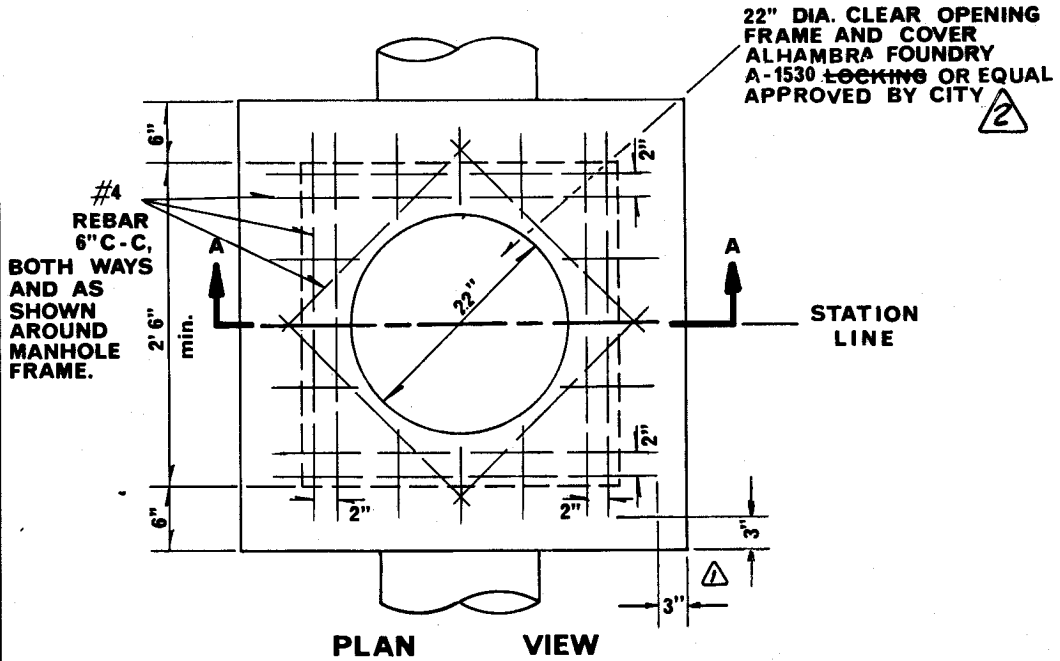

PLAN VIEW

NOTES:

1. Class 560-C-3250 Concrete to be used.

2. Pipe size and inlet and outlet flow line elevations to be shown on improvement plans.

3. When pipe sizes greater than 18" are used a larger frame and cover may be required by the City Engineer

4. V is a maximum of 4' For depths greater than 4' or for a vehicular traffic situation use Std. Dwgs. 430 or 431.

5. Bike proof grating shall be used instead of solid cover when shown on plans.

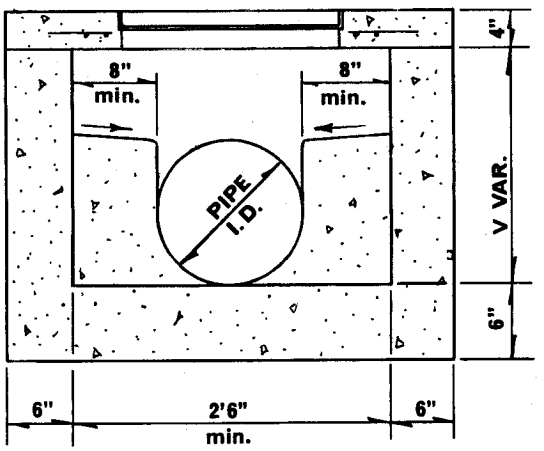

SECTION A - A

APPROVED [signature] DATE 3-8-74
PUBLIC WORKS DIRECTOR - R.C.E. 8134

1	Changed 6" clearance to 3"	[signature]	4/23/84
2	REMOVED LOCKING REQ.	[signature]	4/29/04

CITY OF RIVERSIDE

PUBLIC WORKS DEPT. - ENGINEERING DIV.

CLEANOUT BOX

STANDARD DRAWING NO. **425**

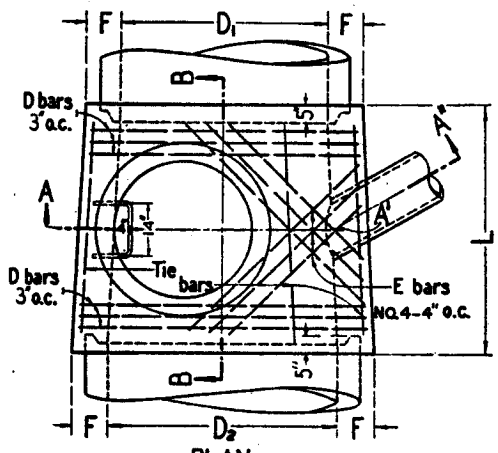

PLAN
(Shaft not shown)

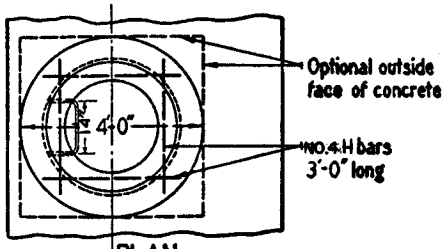

PLAN
(Rings and cover not shown)

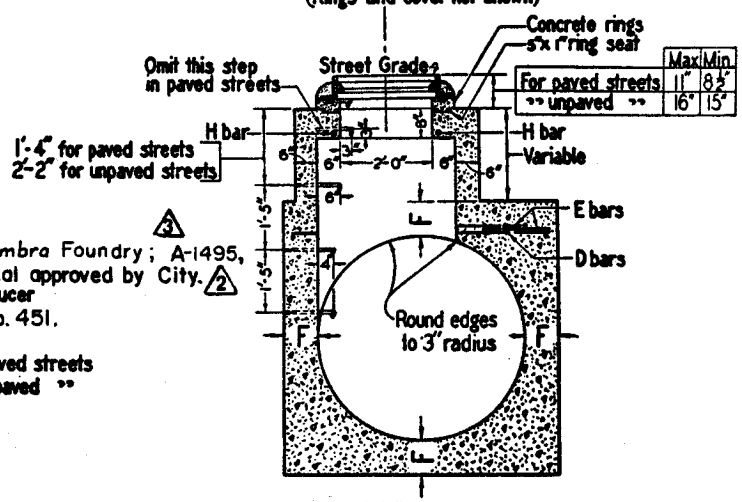

	Max	Min
For paved streets	11"	8½"
" unpaved "	16"	15"

DETAIL M
(See Note 4)

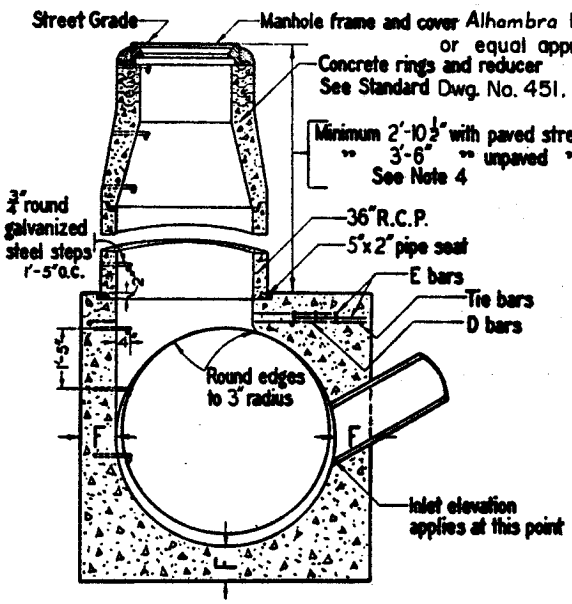

SECTION A-A'-A"

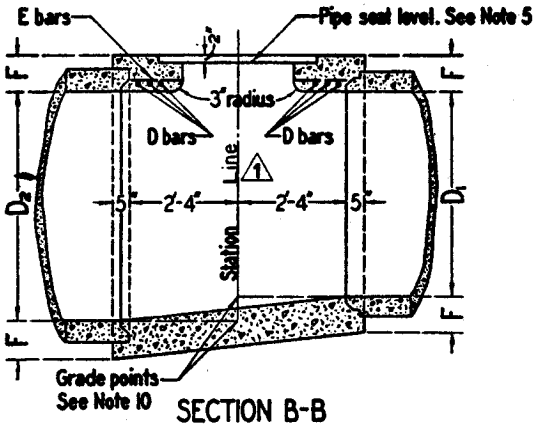

SECTION B-B

TABLE OF VALUES FOR F	
D_2	F
36"	6½"
39"	7"
42"	7½"
45"	7¾"
48"	8"
51"	8½"
54"	9"
57"	9¼"
60"	9½"
63"	10"
66"	10¼"
69"	10¾"
72"	11"
78"	11¾"
84"	12½"
90"	13¼"
96"	14"

APPROVED [signature] DATE 7/14/78
PUBLIC WORKS DIRECTOR - R.C.E. 18793

MARK	REVISIONS	APPR.	DATE
1	Note Revision	[initials]	8-25-80
2	Defined Approval	DLR	4-7-82
3	Changed Riverside Fdy. to Alhambra	[initials]	7-7-82

CITY OF RIVERSIDE
PUBLIC WORKS DEPT. - ENGINEERING DIV.

MANHOLE AX

STANDARD DRAWING NO. **430**
Sheet 1 of 2

NOTES

1 - TABLE of values for F are on this Standard Drawing, Sheet 1.

2 - CENTER OF MANHOLE SHAFT shall be located over center line of storm drain when diameter D_1 is 48" or less, in which case place E bars symmetrically around shaft at 45° with center line.

3 - LENGTH L shall be 5'-6" unless shown otherwise on improvement plan. At option of Contractor L may be increased or location of manhole shifted to meet pipe ends.

4 - DETAIL M: When depth of manhole from street grade to top of box is less than 2'-10½" for paved streets or 3'-6" for unpaved streets, construct monolithic shaft as per Detail M. The Contractor shall have the option of constructing shaft as per Detail M for any depth of manhole. When diameter D_1 is 48" or less, center of shaft shall be located as per Note 2.

5 - THICKNESS OF DECK shall vary when necessary to provide level pipe seat, but shall not be less than tabular values for F shown on this plan.

6 - REINFORCING STEEL shall be round, deformed bars, 1½" clear from face of concrete unless shown otherwise. Sizes and lengths are shown in table below.

7 - CONCRETE shall be in accordance with the table of Concrete Specifications.

8 - STEPS shall be ¾" round, galvanized steel and anchored not less than 6 inches in the walls of structure. Unless otherwise shown the spacing shall be 1'-5" on centers. The lowest step shall be not more than 2'-6" above the invert. (*Alhambra* Fdy. A-3320 or equal approved by city.) 1 2

9 - RINGS, REDUCER, AND PIPE for access shaft shall be seated in cement mortar and neatly pointed or wiped inside the shaft.

10 - STATIONS of manholes shown on improvement plan apply at center of shaft. Elevations shown at stations refer to prolonged invert grade lines.

11 - FLOOR of manhole shall be steel-troweled to springing line.

12 - BODY of manhole shall be poured in one continuous operation, except that the Contractor shall have the option of placing at the springing line a construction joint with a longitudinal keyway.

STEEL TABLE FOR MANHOLE - AX						
	D bars			E bars		
Diam. D_2	No. Req'd.	Size	Length	No. Req'd.	Size	Length
36"	6	No. 4	3'-10"	4	No. 4	2'-9"
39"	6	"	4'-2"	4	"	2'-11"
42"	6	NO. 5	4'-6"	4	"	3'-2"
45"	6	"	4'-10"	4	"	3'-5"
48"	6	"	5'-1"	4	"	3'-7"
51"	6	"	5'-5"	6	"	4'-9"
54"	6	"	5'-9"	6	"	5'-1"
57"	6	"	6'-1"	6	"	5'-6"
60"	6	"	6'-4"	6	"	5'-11"
63"	6	"	6'-8"	6	"	6'-3"
66"	6	"	7'-0"	8	"	6'-8"
69"	6	"	7'-4"	8	"	6'-8"
72"	6	"	7'-7"	8	"	6'-8"
78"	6	"	8'-3"	8	"	6'-8"
84"	6	"	8'-10"	10	"	6'-8"
90"	6	NO. 6	9'-6"	10	"	6'-8"
96"	6	"	10'-1"	10	"	6'-8"

CONCRETE SPECIFICATIONS	
F	CONC. CLASS
6½" - 7½"	560 - C - 3250
7¾" - 9½"	560 - C - 3250
10" - 14"	560 - B - 3250

D bars shall be spaced 3" o.c. E bars shall be spaced 4" o.c. Tie bars shall be No. 3 spaced 18" o.c. or closer.

When L greater than 5'-6" is specified on improvement plan, continue D bars at 6" o.c.

Lengths shown in table are for longest bars. Where shorter bars are required, bend or cut to meet field requirements.

13 - COVER shall have letter D in center.

(Adapted from City of Los Angeles std. plan no. B-1700)

APPROVED [signature] DATE 7/14/78
PUBLIC WORKS DIRECTOR - R.C.E. 18793

MARK	REVISIONS	APPR.	DATE
1	defined approval	DLR	4-7-82
2	Changed Riverside Fdy to Alhambra	[illegible]	7.7.82

CITY OF RIVERSIDE
PUBLIC WORKS DEPT. - ENGINEERING DIV.

MANHOLE AX

STANDARD DRAWING NO. 430
Sheet 2 of 2

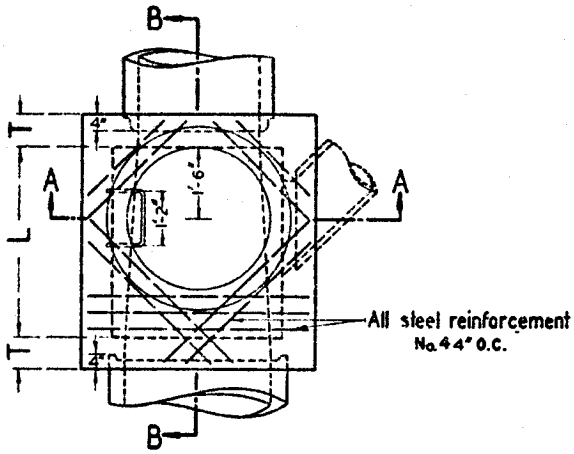

PLAN
(Shaft not shown)

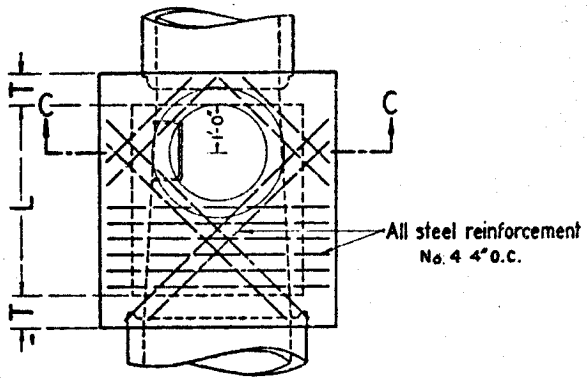

DETAIL N
PLAN
(Shaft not shown)
See Note M

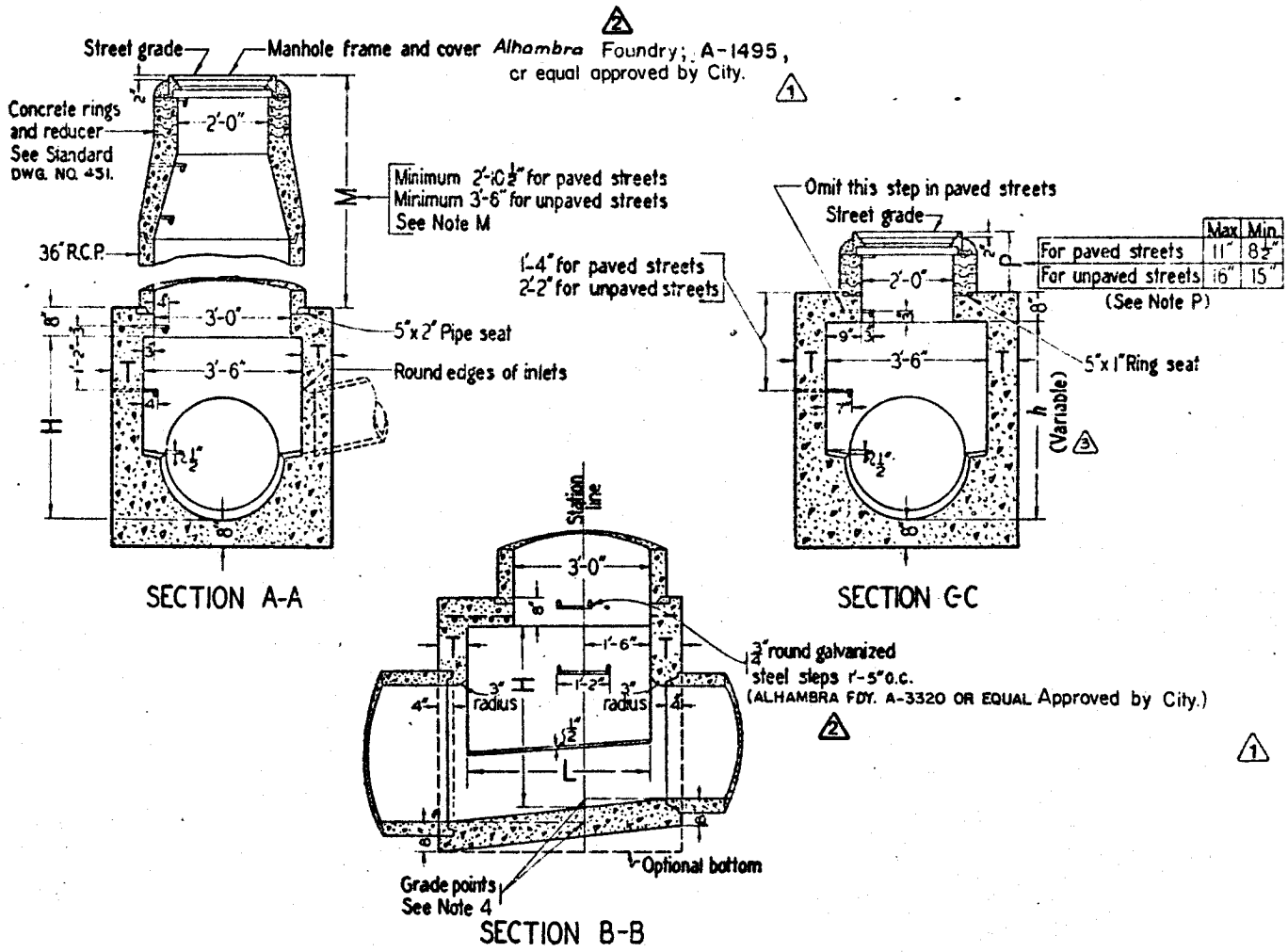

	Max	Min
For paved streets	11"	8½"
For unpaved streets	16"	15"

(See Note P)

SECTION A-A

SECTION C-C

SECTION B-B

APPROVED [signature] DATE 7/14/78
PUBLIC WORKS DIRECTOR - R.C.E. 18793

MARK	REVISIONS	APPR.	DATE
1	defined approval	DLR	4-7-82
2	Changed Riverside Fdy to Alhambra	[illegible]	7.7.82
3	Changed H in Sec C-C to h	[illegible]	10.7.83

CITY OF RIVERSIDE
PUBLIC WORKS DEPT. - ENGINEERING DIV.

MANHOLE EZ

STANDARD DRAWING NO. 431

Sheet 1 of 2

NOTES

H-HEIGHT H (in Sec. A-A and Sec. B-B) shall be not less than 4'0" but may be increased at option of Contractor, provided that the value of M shall be not less than the minimum specified and that the reducer shall be used. For *h* 3 (in Sec. C-C) see Note P.

L-LENGTH L shall be 4' unless otherwise shown on improvement plan. L may be increased or location of manhole shifted to meet pipe ends, at the option of Contractor, except that 1 any change in location of manhole must be approved by the City Engineer.

M-SHAFT shall be constructed as per Sec. C-C and Detail N when depth M from street grade to top of box is less than 2' 10 1/2" for paved streets or 3' 6" for unpaved streets.

P-DEPTH P may be reduced to an absolute limit of 6 inches when larger values of P would reduce *h* 3 (in Sec. C-C) to 3' 6" or less.

T-T shall be 8" for values of H up to and including 8 ft.
T shall be 10" for values of H over 8 ft.

1- STEPS shall be 3/4" round, galvanized steel and anchored not less than 6" in the walls of structures. Unless otherwise shown, steps shall be spaced 1' 5" on centers. The lowest step shall be not more 1 than 2 ft. above the ledge at side of manhole floor. (Alhambra 2 Fdy. A-3320 or equal approved by city.)

2 - CONCRETE shall be 560-C-3250.

3 - REINFORCING STEEL shall be No. 4 deformed, straight bars 1 1/2" clear from face of concrete.

4 - STATIONS of manholes shown on improvement plan apply at center line of shaft. Elevations are shown at shaft center and refer to the prolonged invert grade line. See Note L for shifting location.

5 - FLOOR of manhole shall be steel-troweled.

6 - RINGS, reducer, and pipe for access shaft shall be seated in cement mortar and neatly pointed or wiped inside shaft.

7. - COVER shall have letter D in center.

(Adapted from City of Los Angeles Std. Plan No. B-1532)

APPROVED Robert C. Wahle DATE 7/14/78
PUBLIC WORKS DIRECTOR - R.C.E. 18793

MARK	REVISIONS	APPR.	DATE
1	Defined app. & Eng	D&R	4-7-82
2	Changed Riv. to Alham.		7-7-82
3	Changed H in Sec. C-C to h;		10-7-83

CITY OF RIVERSIDE
PUBLIC WORKS DEPT. - ENGINEERING DIV.

MANHOLE EZ

STANDARD DRAWING NO. 431
Sheet 2 of 2

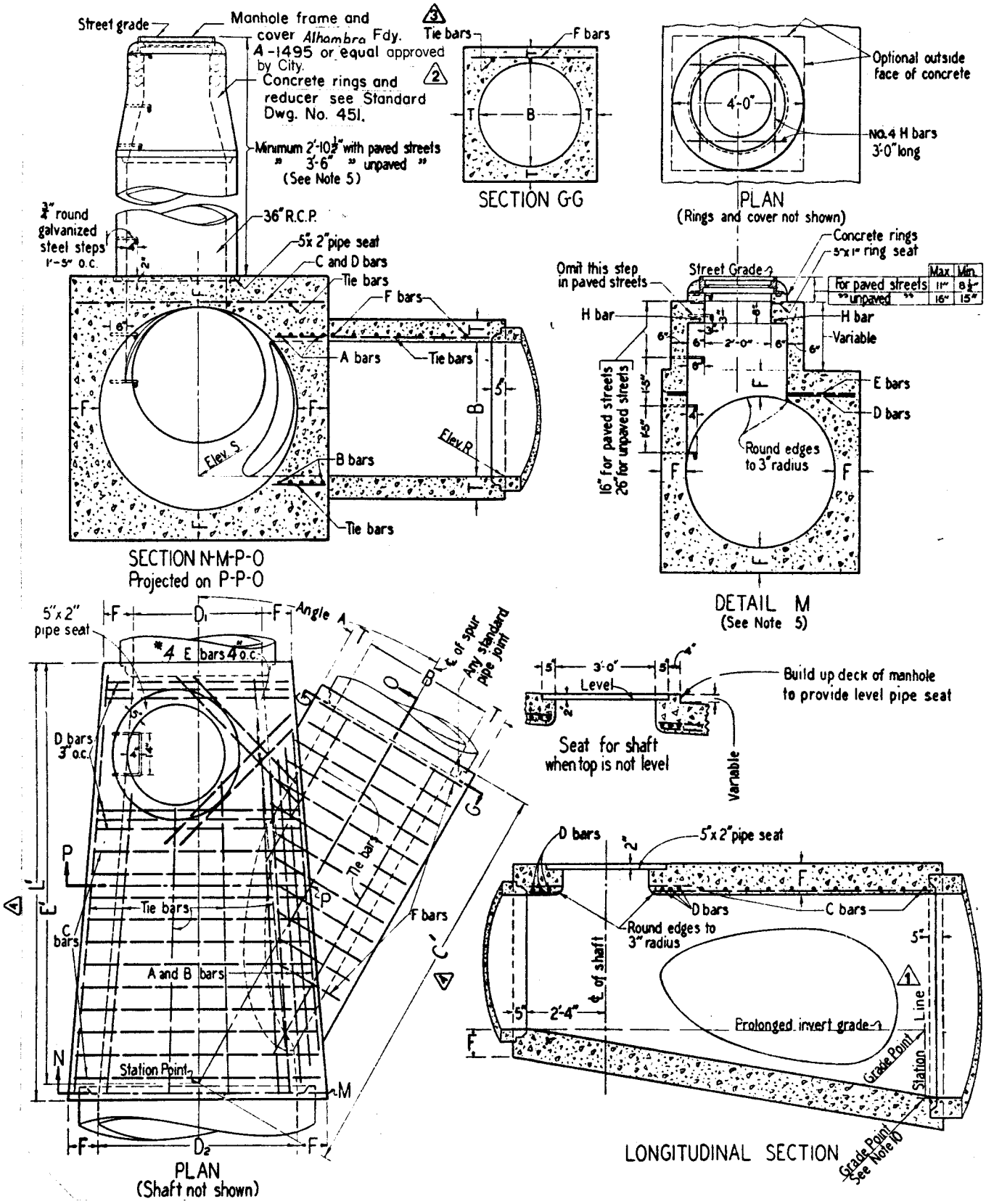

APPROVED Robert C. Wade DATE 7/14/78
PUBLIC WORKS DIRECTOR - R.C.E. 18793

MARK	REVISIONS	APPR.	DATE
1	Note Revision	WJ	8-25-80
2	Defined Approval	DJR	4-7-82
3	Changed Riverside Fdy to Alhambra	WJ	7-7-82
4	Added: Prime to C, E, & L, and Sheet 3.	[illegible]	12/17/84

CITY OF RIVERSIDE
PUBLIC WORKS DEPT. - ENGINEERING DIV.

MANHOLE JM

STANDARD DRAWING NO. **432**
Sheet 1 of 3

NOTES

4

1 - VALUES for A, B, C', D_1, D_2, E', L', Elevation R, and Elevation S are shown on the improvement plan (see Sheet 3 of 3). TABLE of values for F and T hereon.

2 - LATERALS: If laterals enter on both sides of manhole, access shaft shall be located on side receiving the smaller lateral. Laterals shall be designated on improvement plan as right or left, facing in the direction of stationing.

3 - CENTER OF MANHOLE SHAFT shall be located over center line of main storm drain when D_1 is 48" or less, in which case place 4 E bars symmetrically around shaft at 45° with center line.

4 - LENGTH L (shown on improvement plan) may be increased at option of Contractor to meet pipe ends, but any change in location of spur must be approved by the City Engineer.

5 - DETAIL M: When depth of manhole from street grade to top of box is less than 2'-10½" for paved streets or 3'-6" for unpaved streets, construct monolithic shaft as per Detail M.
The Contractor shall have the option of constructing shaft as per Detail M for any depth of manhole.
When diameter D_1 is 48" or less, center of shaft shall be located as per Note 3.

6 - REINFORCING STEEL shall be round, deformed, straight bars, 1½" clear from face of concrete unless shown otherwise.
Tie bars shall be No. 3 and spaced 18" on centers or closer.
Steel schedule detailed on improvement plan

7 - CONCRETE shall be in accordance with the table of Concrete Specifications.

8 - STEPS shall be ¾" round, galvanized steel and anchored not less than 6 inches in the walls of structure. Unless otherwise shown the spacing shall be 1'-5" on centers. The lowest step shall be not more than 2 feet above the invert. (Alhambra Fdy. A-3320 or Equal Approved by City.) 1 2

9 - RINGS, REDUCER, AND PIPE for access shaft shall be seated in cement mortar and neatly pointed or wiped inside shaft.

10 - STATIONS of manholes shown on improvement plan apply at intersection of center lines of main line and spur. Elevations shown at stations refer to prolonged invert grade lines.

11 - FLOOR of manhole shall be steel troweled to springing line

12 - BODY of manhole, including spur, shall be poured in one continuous operation, except that the Contractor shall have the option of placing at the springing line a construction joint with longitudinal keyway.

13 - ELEVATION "S" applies at center of main line on prolongation of invert of spur

TABLE OF BAR SIZES		
D2 or B	A & B bars	D or F bars
12"-39"	No. 5 at 3"	No. 4 at 6"
42"-84"	No. 6 at 3"	No. 5 at 6"
90"-144"	No. 7 at 3"	No. 6 at 6"

3

TABLE OF VALUES FOR F AND T				
D_2	F		B	T
12"	4"		12"	4"
15"	4¼"		15"	4¼"
18"	4½"		18"	4½"
21"	5"		21"	5"
24"	5¼"		24"	5¼"
27"	5½"		27"	5½"
30"	6"		30"	6"
33"	6¼"		33"	6¼"
36"	6½"		36"	6½"
39"	7"		39"	7"
42"	7½"		42"	7½"
45"	7¾"		45"	7¾"
48"	8"		48"	8"
51"	8½"		51"	8½"
54"	9"		54"	9"
57"	9¼"		57"	9¼"
60"	9½"		60"	9½"
63"	10"		63"	10"
66"	10¼"		66"	10¼"
69"	10¾"		69"	10¾"
72"	11"		72"	11"
78"	11¾"			
84"	12½"			
90"	13¼"			
96"	14"			

CONCRETE SPECIFICATIONS	
F	CONCRETE CLASS
4" - 7"	560 - C - 3250
7½" - 9½"	560 - C - 3250
10" - 14"	560 - B - 3250

14 - COVER shall have letter D in center.

(ADAPTED FROM CITY OF LOS ANGELES STD. PLAN NO. B-1528)

APPROVED Robert C. Wales DATE 7/14/78
PUBLIC WORKS DIRECTOR - R.C.E. 18793

MARK	REVISIONS	APPR.	DATE
1	defined approval	DLR	4-7-82
2	Changed Riverside Fdy to Alhambra		7-7-82
3	Added Table Of Bar Sizes		11-9-82
4	Added Sheet 3.		12/27/84

CITY OF RIVERSIDE
PUBLIC WORKS DEPT. - ENGINEERING DIV.

MANHOLE JM

STANDARD DRAWING NO. 432
Sheet 2 of 3

STORM DRAIN MAIN

D/D2	ANGLE / VALUE	30	40	50	60	70	80
12	C	2.2	1.8	1.6	1.5	1.4	1.3
	E	1.9	1.5	1.2	1.0	0.8	0.6
15	C	2.5	2.0	1.8	1.6	1.5	1.5
	E	2.2	1.7	1.3	1.1	0.9	0.7
18	C	2.8	2.3	2.0	1.8	1.7	1.6
	E	2.4	1.8	1.4	1.1	0.9	0.7
21	C	3.1	2.5	2.2	2.0	1.9	1.8
	E	2.7	2.0	1.6	1.2	1.0	0.7
24	C	3.4	2.7	2.4	2.2	2.0	2.0
	E	3.0	2.2	1.7	1.3	1.0	0.8
27	C	3.7	3.0	2.6	2.3	2.2	2.1
	E	3.2	2.4	1.8	1.4	1.1	0.8
30	C	4.0	3.2	2.8	2.5	2.4	2.3
	E	3.5	2.6	2.0	1.5	1.1	0.8
33	C	4.3	3.4	3.0	2.7	2.5	2.4
	E	3.8	2.8	2.1	1.6	1.2	0.8
36	C	4.6	3.7	3.2	2.9	2.7	2.6
	E	4.0	2.9	2.2	1.7	1.2	0.9
39	C	4.9	3.9	3.4	3.0	2.9	2.7
	E	4.3	3.1	2.4	1.8	1.3	0.9
42	C	5.3	4.2	3.6	3.2	3.0	2.9
	E	4.6	3.3	2.5	1.9	1.4	0.9
45	C	5.5	4.4	3.8	3.4	3.2	3.1
	E	4.9	3.5	2.6	2.0	1.4	0.9
48	C	5.8	4.6	4.0	3.6	3.3	3.2
	E	5.1	3.7	2.7	2.0	1.5	1.0
51	C	6.2	4.9	4.2	3.8	3.5	3.4
	E	5.4	3.9	2.9	2.1	1.5	1.0
54	C	6.5	5.2	4.4	4.0	3.7	3.5
	E	5.7	4.1	3.0	2.2	1.6	1.0
57	C	6.8	5.4	4.6	4.1	3.8	3.7
	E	5.9	4.2	3.1	2.3	1.6	1.1
60	C	7.1	5.6	4.8	4.3	4.0	3.8
	E	6.2	4.4	3.3	2.4	1.7	1.1
63	C	7.4	5.9	5.0	4.5	4.2	4.0
	E	6.5	4.6	3.4	2.5	1.8	1.1
66	C	7.7	6.1	5.2	4.7	4.3	4.2
	E	6.7	4.8	3.5	2.6	1.8	1.1
69	C	8.0	6.4	5.4	4.9	4.5	4.3
	E	7.0	5.0	3.7	2.7	1.9	1.2
72	C	8.3	6.6	5.6	5.0	4.7	4.5
	E	7.3	5.2	3.8	2.8	1.9	1.2
75	C	8.6	6.8	5.8	5.2	4.8	4.6
	E	7.5	5.3	3.9	2.8	2.0	1.2
78	C	9.0	7.1	6.0	5.4	5.0	4.8
	E	7.8	5.5	4.0	2.9	2.0	1.2
81	C	9.3	7.3	6.2	5.6	5.2	4.9
	E	8.1	5.7	4.2	3.0	2.1	1.3
84	C	9.6	7.6	6.4	5.7	5.3	5.1
	E	8.4	5.9	4.3	3.1	2.2	1.3
87	C	9.9	7.8	6.6	5.9	5.5	5.3
	E	8.6	6.1	4.4	3.2	2.2	1.3
90	C	10.2	8.1	6.8	6.1	5.7	5.4
	E	8.9	6.3	4.6	3.3	2.3	1.4
93	C	10.5	8.3	7.0	6.3	5.8	5.6
	E	9.2	6.5	4.7	3.4	2.3	1.4
96	C	10.8	8.5	7.2	6.5	6.0	5.7
	E	9.4	6.7	4.8	3.5	2.4	1.4

STORM DRAIN LATERAL

B	ANGLE / VALUE	30	40	50	60	70	80
12	C	1.9	1.5	1.2	1.0	0.8	0.6
	E	2.2	1.8	1.6	1.5	1.4	1.3
15	C	2.2	1.7	1.3	1.1	0.9	0.7
	E	2.5	2.0	1.8	1.6	1.5	1.5
18	C	2.4	1.8	1.4	1.1	0.9	0.7
	E	2.8	2.3	2.0	1.8	1.7	1.6
21	C	2.7	2.0	1.6	1.2	1.0	0.7
	E	3.1	2.5	2.2	2.0	1.9	1.8
24	C	3.0	2.2	1.7	1.3	1.0	0.8
	E	3.4	2.7	2.4	2.2	2.0	2.0
27	C	3.2	2.4	1.8	1.4	1.1	0.8
	E	3.7	3.0	2.6	2.3	2.2	2.1
30	C	3.5	2.6	2.0	1.5	1.1	0.8
	E	4.0	3.2	2.8	2.5	2.4	2.3
33	C	3.8	2.8	2.1	1.6	1.2	0.8
	E	4.3	3.4	3.0	2.7	2.5	2.4
36	C	4.0	2.9	2.2	1.7	1.2	0.9
	E	4.6	3.7	3.2	2.9	2.7	2.6
39	C	4.3	3.1	2.4	1.8	1.3	0.9
	E	4.9	3.9	3.4	3.0	2.9	2.7
42	C	4.6	3.3	2.5	1.9	1.4	0.9
	E	5.3	4.2	3.6	3.2	3.0	2.9
45	C	4.9	3.5	2.6	2.0	1.4	0.9
	E	5.5	4.4	3.8	3.4	3.2	3.1
48	C	5.1	3.7	2.7	2.0	1.5	1.0
	E	5.8	4.6	4.0	3.6	3.3	3.2
51	C	5.4	3.9	2.9	2.1	1.5	1.0
	E	6.2	4.9	4.2	3.8	3.5	3.4
54	C	5.7	4.1	3.0	2.2	1.6	1.0
	E	6.5	5.2	4.4	4.0	3.7	3.5
57	C	5.9	4.2	3.1	2.3	1.6	1.1
	E	6.8	5.4	4.6	4.1	3.8	3.7
60	C	6.2	4.4	3.3	2.4	1.7	1.1
	E	7.1	5.6	4.8	4.3	4.0	3.8
63	C	6.5	4.6	3.4	2.5	1.8	1.1
	E	7.4	5.9	5.0	4.5	4.2	4.0
66	C	6.7	4.8	3.5	2.6	1.8	1.1
	E	7.7	6.1	5.2	4.7	4.3	4.2
69	C	7.0	5.0	3.7	2.7	1.9	1.2
	E	8.0	6.4	5.4	4.9	4.5	4.3
72	C	7.3	5.2	3.8	2.8	1.9	1.2
	E	8.3	6.6	5.6	5.0	4.7	4.5
75	C	7.5	5.3	3.9	2.8	2.0	1.2
	E	8.6	6.8	5.8	5.2	4.8	4.6
78	C	7.8	5.5	4.0	2.9	2.0	1.2
	E	9.0	7.1	6.0	5.4	5.0	4.8
81	C	8.1	5.7	4.2	3.0	2.1	1.3
	E	9.3	7.3	6.2	5.6	5.2	4.9
84	C	8.4	5.9	4.3	3.1	2.2	1.3
	E	9.6	7.6	6.4	5.7	5.3	5.1
87	C	8.6	6.1	4.4	3.2	2.2	1.3
	E	9.9	7.8	6.6	5.9	5.5	5.3

EXAMPLE:

Given:

D_2 = 60"
B = 39"
A = 50°

Find: C', E', & L'

SOLUTION:

1. Enter Storm Drain Main Table with Given D_2 & A. C_M = 4.8 ft. E_M = 3.3 ft.
2. Enter Storm Drain Lateral Table with Given B & A. C_L = 2.4 ft. E_L = 3.4 ft.
3. $C' = C_M + C_L$ = 4.8 ft. + 2.4 ft. = 7.2 ft.
4. $E' = E_M + E_L$ = 3.3 ft. + 3.4 ft. = 6.7 ft.
5. $L' = E' + 1$ ft. = 6.7 ft. + 1 ft. = 7.7 ft.

APPROVED [signature] DATE 12/27/84
PUBLIC WORKS DIRECTOR - R.C.E. 18793

MARK	REVISIONS	APPR.	DATE
1	CORRECTED VALUES AND CHANGED EQUATION	[illegible]	12-23-86

CITY OF RIVERSIDE
PUBLIC WORKS DEPT. - ENGINEERING DIV.

MANHOLE JM

STANDARD DRAWING NO. 432

Sheet 1 of 3

NOTES

(1) THE MATERIAL AND FINISH SHALL CONFORM TO THE SPECIFICATIONS APPLICABLE THERETO.

(2) COVER SHALL FIT IN EITHER POSITION.

(3) FRAME & COVER SHALL BE SET TO SIDEWALK ELEVATIONS.

(4) WEIGHTS: FRAME — 25 POUNDS
COVER — 55 POUNDS

(5) THIS SQUARE FRAME AND COVER IS FOR REPLACEMENT USE ONLY.

(6) FRAME & COVER SHALL BE FITTED WITH TWO 3/8" DIA STAINLESS STEEL ALLEN BOLTS FOR LOCKING PURPOSES. BOLT HEADS SHALL BE SET FLUSH WITH TOP OF FRAME & COVER. △1

FRAME & COVER PLAN

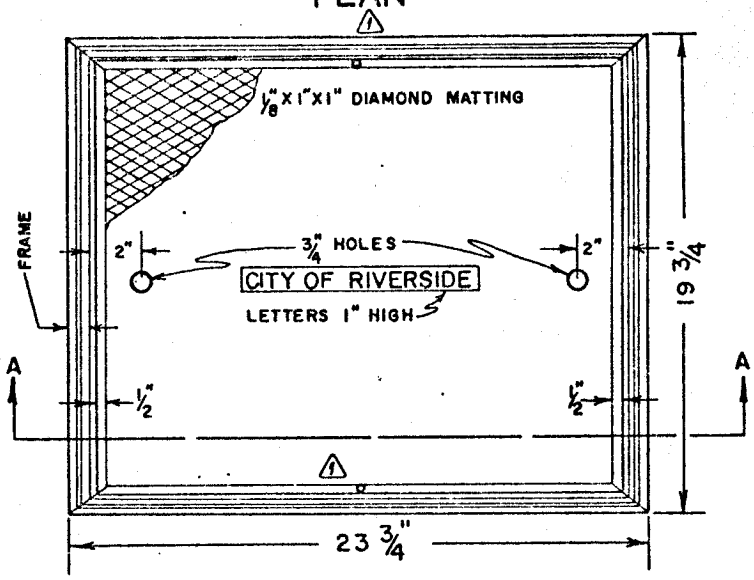

SECTION A-A

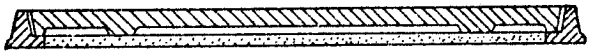

BOTTOM PLAN OF COVER

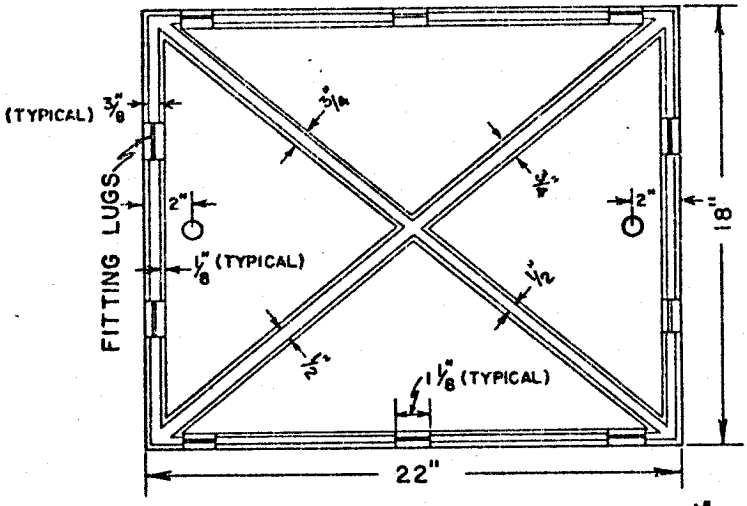

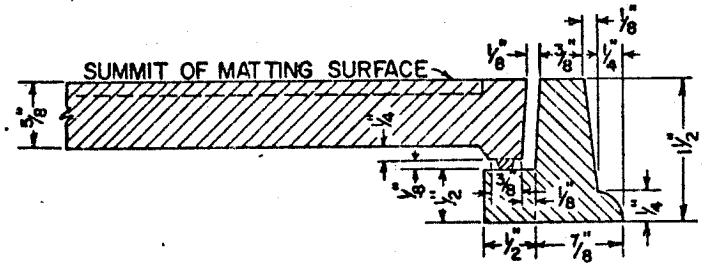

DETAIL OF FRAME & COVER CONNECTION

APPROVED Robert C. Wales DATE 8/3/78
PUBLIC WORKS DIRECTOR - R.C.E. 18793

MARK	REVISIONS	APPR.	DATE
△1	Added Bolts & Note 6.	[illegible]	4/23/84

CITY OF RIVERSIDE

PUBLIC WORKS DEPT. - ENGINEERING DIV.

CATCH BASIN FRAME AND COVER

STANDARD DRAWING NO. 450

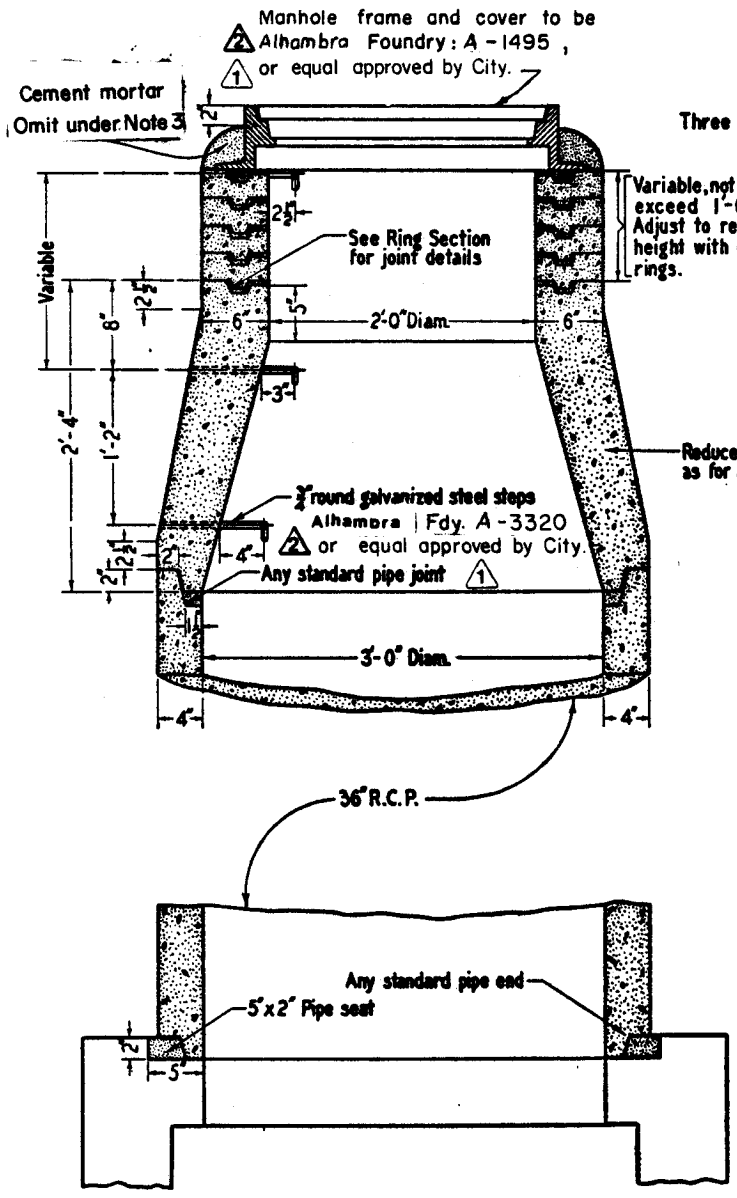

VERTICAL SECTION OF MANHOLE SHAFT

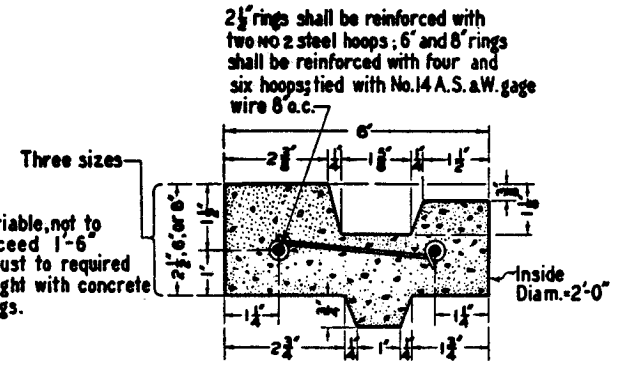

CROSS SECTION OF CONCRETE RING

NOTES

1-CONCRETE for poured units shall be 560-D-3250.

2-JOINTS shall be filled with cement mortar and neatly pointed or wiped on inside of shaft.

3-COLLAR of cement mortar around cover frame shall be omitted in rock and oil streets and in paved streets.

4-CONCRETE RINGS shall be of the dimensions shown and reinforced as shown hereon.

5-STEPS shall be 3/4" round galvanized steel. Top step shall be placed directly beneath the manhole cover from with legs extendinginto wall of shaft on radial lines. Width of all steps shall be 1'2" between leg centers. Except where shown otherwise, spacing of steps in shaft shall be 2 1'5" between centers. (Alhambra Fdy. 1 A-3320 or equal app. by City.)

6-CENTRIFUGALLY SPUN UNITS may be used at the option of the contractor, conforming to specifications for Centrifugal Concrete Pipe and to Detail C on Sheet 2.

7-LENGTH of sections of 36" R.C.P. for manhole shaft may be 1'0", 2'0", 3'0", or 4'0" at the option of the contractor.

8-COVER shall have letter D in center.

APPROVED Robert C. Wales DATE 7/17/78
PUBLIC WORKS DIRECTOR - R.C.E. 18793

MARK	REVISIONS	APPR.	DATE
1	defined approval	DLR	4-7-82
2	Changed Riverside Fdy to Alhambra	wdy	7.7.82

CITY OF RIVERSIDE

PUBLIC WORKS DEPT. - ENGINEERING DIV.

CONCRETE RINGS, REDUCER, & PIPE FOR MANHOLE SHAFT

STANDARD DRAWING NO. 451

Sheet 1 of 2

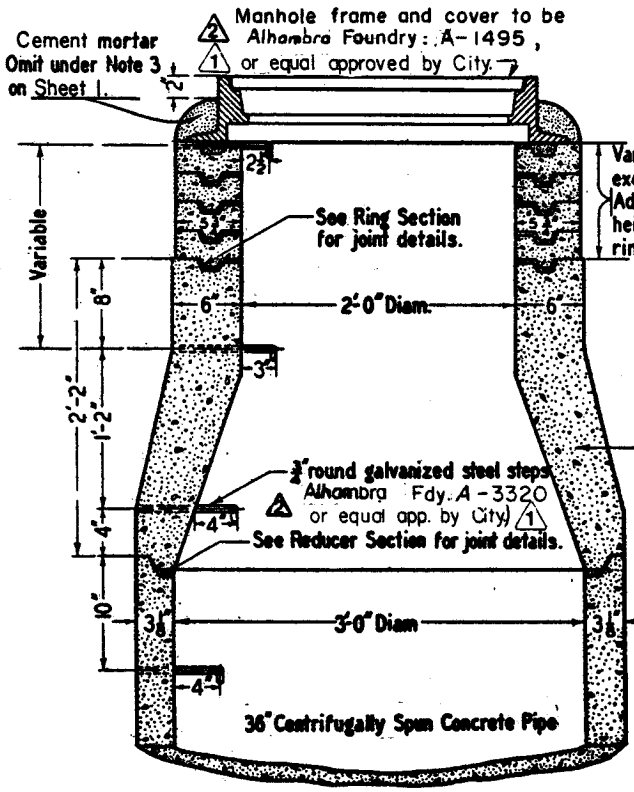

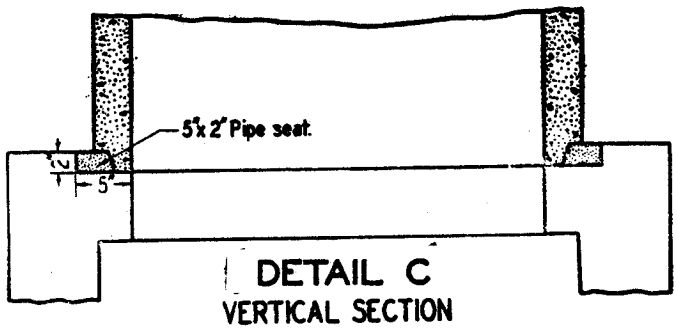

DETAIL C
VERTICAL SECTION
OF
MANHOLE SHAFT

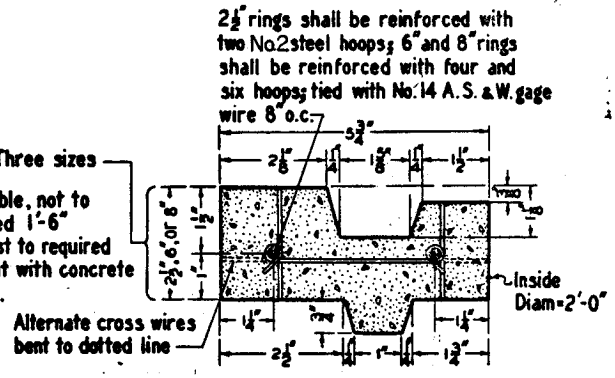

CROSS SECTION
OF
CONCRETE RING

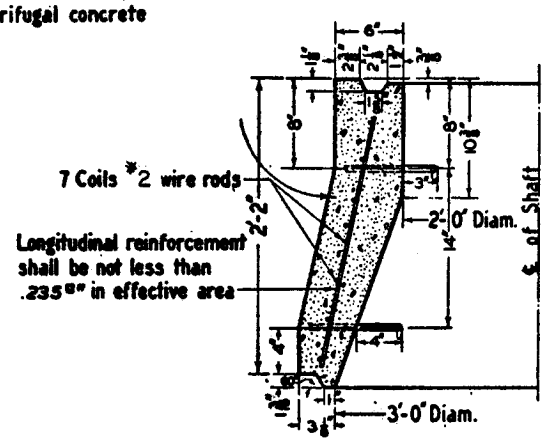

HALF SECTION
OF
REDUCER
(For use with Centrifugally Spun Concrete Pipe.)

NOTES

DETAIL C shall apply when centrifugally spun concrete pipe and rings are used in manhole shaft, as per Note 6 on Sheet 1.

TRANSVERSE REINFORCING STEEL for 36" centrifugally spun concrete pipe shall consist of coils of No. 2 rods spaced 4" c to c or closer.

LOADING TEST is not required for centrifugally spun concrete pipe used for manhole shaft.

LENGTH of pipe sections for manhole shaft may be 1'2", 2'6" or 3' 10 3/4" at the option of the contractor.

ADDITIONAL NOTES for Detail C are shown on Sheet 1 of 2

COVER shall have letter D in center.

APPROVED Robert C. Wiley DATE 7/17/78
PUBLIC WORKS DIRECTOR - R.C.E. 18793

MARK	REVISIONS	APPR.	DATE
1	defined approval	DKR	4-7-82
2	Changed Riverside Fdy to Alhambra	[illegible]	7.7.82

CITY OF RIVERSIDE
PUBLIC WORKS DEPT. - ENGINEERING DIV.

CONCRETE RINGS, REDUCER, & PIPE FOR MANHOLE SHAFT

STANDARD DRAWING NO. 451
Sheet 2 of 2

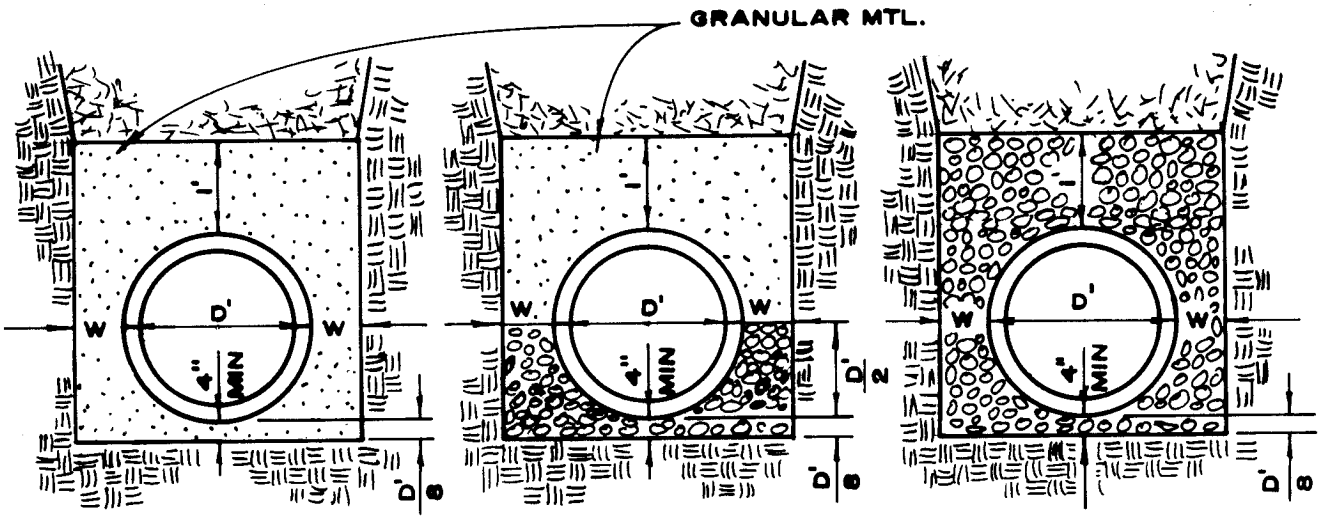

CASE I

CASE II

CASE III

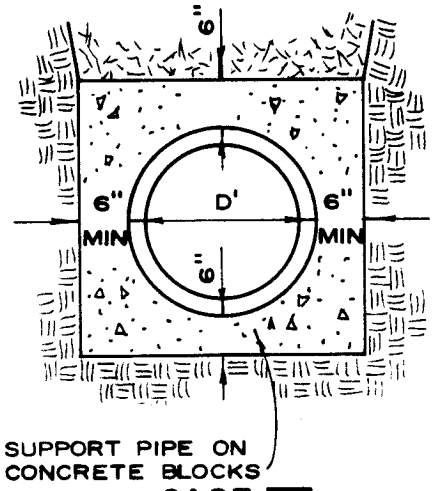

CASE IV

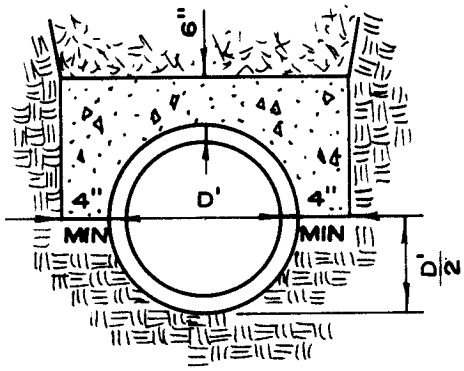

CASE V
(FOR EXISTING PIPE)

CASE	LOAD FACTOR
I	1.5
II	1.9
III	2.2
IV	4.5
V	2.6*

RIGID PIPE DESIGN DATA

* SEE NOTE 5

PIPE	COVER	W	
		MAX	MIN
VCP 12" & UNDER	> 8'	8"	6"
VCP 15" & OVER	> 8'	12"	6"
OTHERS	> 8'	10"	6"
ALL	< 8'	12"	6"

LEGEND

- PCC BEDDING
- GRANULAR MATERIAL
- 3/4" CRUSHED ROCK PER SECTION 200-1.2 OF THE STANDARD SPEC.
- BACKFILL
- NATIVE SOIL

APPROVED William D. Gardner DATE 12-23-86
DEPUTY PUBLIC WORKS DIRECTOR - R.C.E. 11405

MARK	REVISIONS	APPR.	DATE

CITY OF RIVERSIDE
PUBLIC WORKS DEPT. - ENGINEERING DIV.

PIPE BEDDING

STANDARD DRAWING NO. 452
SHT. 1 OF 2

NOTES FOR PIPE BEDDING

1. GRANULAR MATERIAL SHALL BE SAND, GRAVEL, DISINTEGRATED GRANITE, CRUSHED SLAG, CRUSHED AGGREGATE OR NATIVE SOIL WITH A SAND EQUIVALENT OF NOT LESS THAN 30. FOR ALL PLASTIC PIPE, EXCEPT ABS OR PVC COMPOSITE PIPE, BEDDING MATERIAL SHALL BE CRUSHED ROCK AS PER SECTION 200-1.2 OF THE STANDARD SPECIFICATIONS FOR 1/2-INCH ROCK.

2. WHERE GROUND WATER IS ENCOUNTERED IN THE TRENCH, THE CONTRACTOR SHALL, AT THE DIRECTION OF THE CITY ENGINEER, EXCAVATE TO A DEPTH OF 6-INCHES BELOW THE PROPOSED PIPE AND PLACE A BEDDING OF 3/4-INCH CRUSHED ROCK OR CRUSHED SLAG. IF THE GROUND WATER IS MORE THAN 3-INCHES ABOVE FLOW LINE OF PIPE, THE CONTRACTOR SHALL CONSTRUCT CONCRETE BARRIERS 3-FEET WIDE, IN 25-FOOT INTERVALS, UNDER THE PIPE TO PREVENT THE FLOW OF WATER THROUGH THE CRUSHED BEDDING MATERIAL.

3. CONCRETE SHALL CONFORM TO SECTION △1 201-1.1.2 OF THE LATEST EDITION OF STANDARD SPECIFICATIONS FOR PUBLIC WORKS CONSTRUCTION.

4. TRENCH WALLS SHALL BE VERTICAL WITHIN THE BEDDING AREA, UNLESS IMPROVED BEDDING, AS APPROVED BY THE CITY ENGINEER, IS USED.

5. THE LOAD FACTOR MAY BE INCREASED FOR CASE △1 IV BY USE OF REINFORCING STEEL. THE LOAD FACTOR IS 3.2 FOR P=0.4%, 4.6 FOR P=1.0%, IN WHICH P IS THE RATIO OF THE AREA OF STEEL TO THE AREA OF CONCRETE ABOVE THE CROWN OF THE PIPE.

APPROVED William D. Gardner DATE 6-12-86
DEPUTY PUBLIC WORKS DIRECTOR - R.C.E. 11405

MARK	REVISIONS	APPR.	DATE
△1	NOTE 3 CHANGED SEC 306 TO 200-1.1.2; NOTE 5 CHANGED CASE V TO IV.	[illegible]	12-23-86

CITY OF RIVERSIDE
PUBLIC WORKS DEPT. - ENGINEERING DIV.

PIPE BEDDING

STANDARD DRAWING NO. 452
SHT 2 OF 2

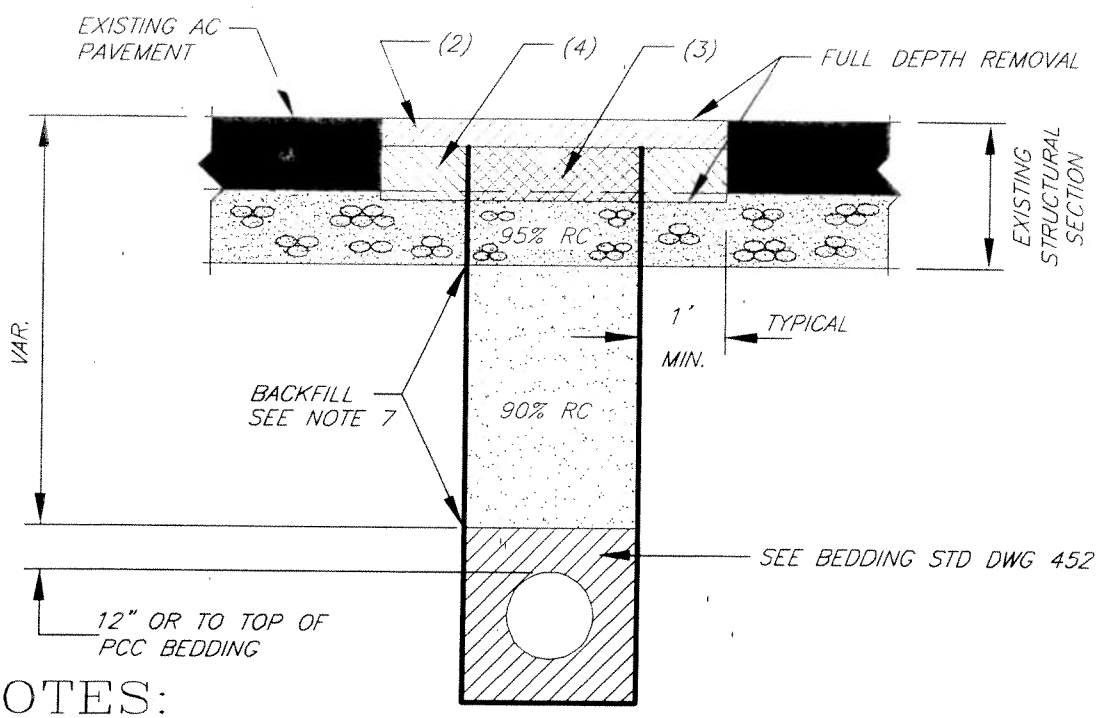

NOTES:

1. NO TRENCHING WILL BE ALLOWED EXCEPT FOR EMERGENCIES IF THE STREET HAS BEEN PAVED OR RESURFACED WITHIN THE PAST 2 YEARS.
2. COLD MILL OR GRIND EXISTING ASPHALT CONCRETE PAVEMENT TO A DEPTH OF 0.15' WITHIN THE TRENCH AREA AND TO AT LEAST 1' BEYOND THE EDGES OF THE TRENCH, OR REMOVE FULL DEPTH OF ASPHALT CONCRETE SECTION WITHIN THE SAME LIMITS. FOR STREETS THAT HAVE BEEN RESURFACED WITHIN THE PAST FIVE (5) YEARS PRIOR TO THIS TRENCH EXCAVATION (AS IDENTIFIED BY PUBLIC WORKS RECORDS), GRINDING SHALL BE EXTENDED A MINIMUM 1' BEYOND THE TRENCH LIMITS, OR A FULL TRAFFIC LANE WIDTH, WHICHEVER IS GREATER.
3. REPLACEMENT ASPHALT CONCRETE SECTION SHALL BE MINIMUM OF 1" GREATER THAN EXISTING AND SHALL HAVE 5" MINIMUM THICKNESS.
4. ADDITIONAL REPLACEMENT OF ASPHALT CONCRETE LAYER WILL BE REQUIRED WHERE EXISTING ASPHALT THICKNESS IS LESS THAN 3" THICK WITHIN THE AREA COVERED BY NOTE 2 ABOVE.
5. GRIND UTILITY POT HOLE EXCAVATIONS A MINIMUM OF 1' WIDER THAN PAVEMENT CUT.
6. CONTRACTOR TO PROVIDE THE CONSTRUCTION INSPECTOR COMPACTION TEST RESULTS CERTIFIED BY A CIVIL OR SOILS ENGINEER, EXCEPT FOR CITY-FUNDED WORK.
7. BACKFILL REQUIREMENTS SHALL BE AS SPECIFIED IN SECTION 306 OF THE "STANDARD SPECIFICATION FOR PUBLIC WORKS CONSTRUCTION." WHERE NO SURFACE IMPROVEMENTS EXIST, THE TOP OF BACKFILL SHALL BE FLUSH WITH THE EXISTING SURFACE AND THE 90% RELATIVE COMPACTION SHALL EXTEND TO THE SURFACE
8. REPLACEMENT OF THE SURFACE IMPROVEMENTS SHALL BE AS SPECIFIED IN THE SECTION 306-1.5 OF THE "STANDARD SPECIFICATIONS FOR PUBLIC WORKS CONSTRUCTION."
9. ASPHALT CONCRETE USED FOR PERMANENT RESURFACING SHALL BE CLASS C2-AR-4000.
10. ALL REQUIREMENTS IN THIS DRAWING APPLY TO TRENCHES IN PUBLIC EASEMENTS, AND RIGHTS OF ENTRY, AS WELL AS THOSE WITHIN STREET RIGHTS OF WAY.
11. IF THE TRENCH EDGE IS 4' OR LESS FROM THE GUTTER LIP FOR TYPE I OR C2 CURB AND GUTTER OR FROM TYPE II CURB, THE EXISTING AC PAVEMENT BETWEEN THE TRENCH AND THE GUTTER LIP AND/OR CURB SHALL BE REMOVED AND REPLACED AS PART OF THE TRENCH BACKFILL.

APPROVED BY

CITY ENGINEER — DATE 4/26/05

MARK	REVISIONS	APPR.	DATE

CITY OF RIVERSIDE

PUBLIC WORKS DEPARTMENT-ENGINEERING DIV.

TRENCH BACKFILL

STANDARD DRAWING NO. 453

Sheet 1 of 1

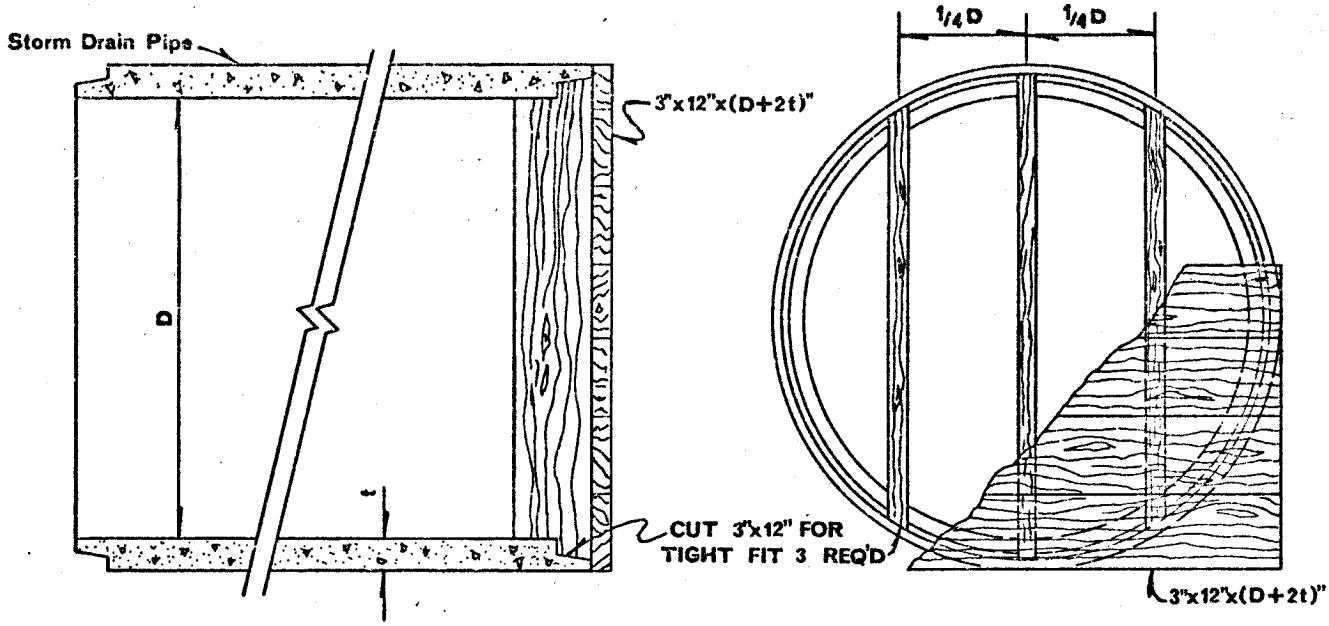

TYPICAL FOR DIAMETERS GREATER THAN 48"

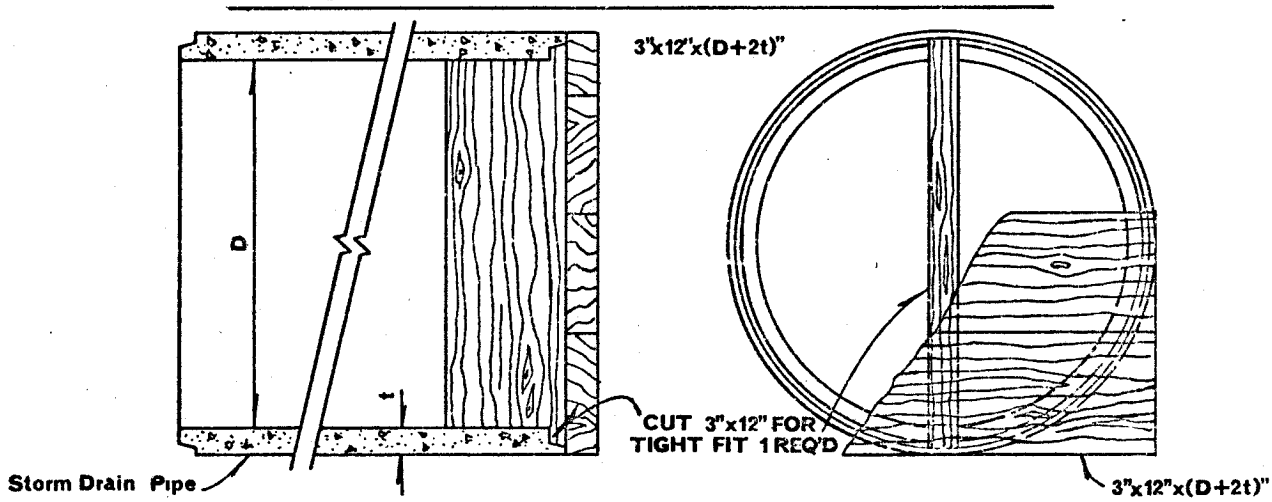

TYPICAL FOR DIAMETERS OF 48" AND LESS

NOTES

1. Lumber to be Douglas Fir, Construction Grade, creosote treated.
2. Boards to be nailed to vertical supports. Use 40d galv. nails 3" o/c.
3. Not for use with diameters over 6'. Maximum depth is 10' over the top of the pipe.

APPROVED Robert C. Wales DATE 8/2/78
PUBLIC WORKS DIRECTOR - R.C.E. 18793

MARK	REVISIONS	APPR.	DATE

CITY OF RIVERSIDE

PUBLIC WORKS DEPT. - ENGINEERING DIV.

TIMBER BULKHEAD

STANDARD DRAWING NO. 456

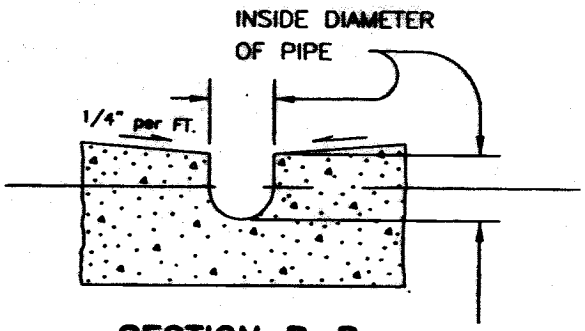

SECTION B–B

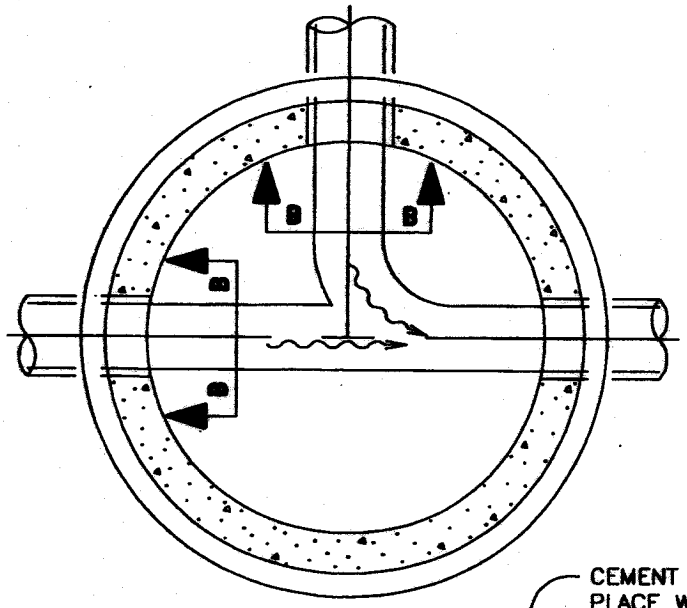

NOTES:

1. All joints shall be set in Class C Portland cement mortar and shall be sack finished.
2. Rings and cones shall be reinforced with #4 round steel wound spirally on 4" centers.
3. Vertical wall of cone shall be on downstream side of manhole.
4. Steps shall be 14" wide stirrup type safety steps. The steps or sockets shall be cast in place at time of manufacture. Steps shall be spaced a maximum of 16" c.c.. Material for steps shall be 1/2" grade 60 steel reinforcing rod coated with polypropylene, ASTM D–4101 or City approved equal.
5. The lower portion of the manhole shall be:

Minimum Diameter	Depth (Shelf to cover)
4'	< 15'
5'	>15' and < 25'
6'	>25' and < 30'

A special designed manhole meeting Cal–OSHA specifications will be required for depths greater than 30'.
The frame and cover shall be 3' diameter (Alhambra Foundry: A1251–6 or City approved equal) where the manhole diameter is greater than 4'.
A 1' minimum shelf shall be maintained.

6. When manhole is in a street to be paved, manhole frame shall be set after adjacent pavement has been placed. Top shall be flush with pavement.
7. First pipe joint shall be no more than 1' from manhole.
8. At the contractor's option, thickness of manhole wall may be 4–1/8" provided Class 560–D–4000 concrete is used.
9. Cover shall have letter S in center.

SECTION A–A

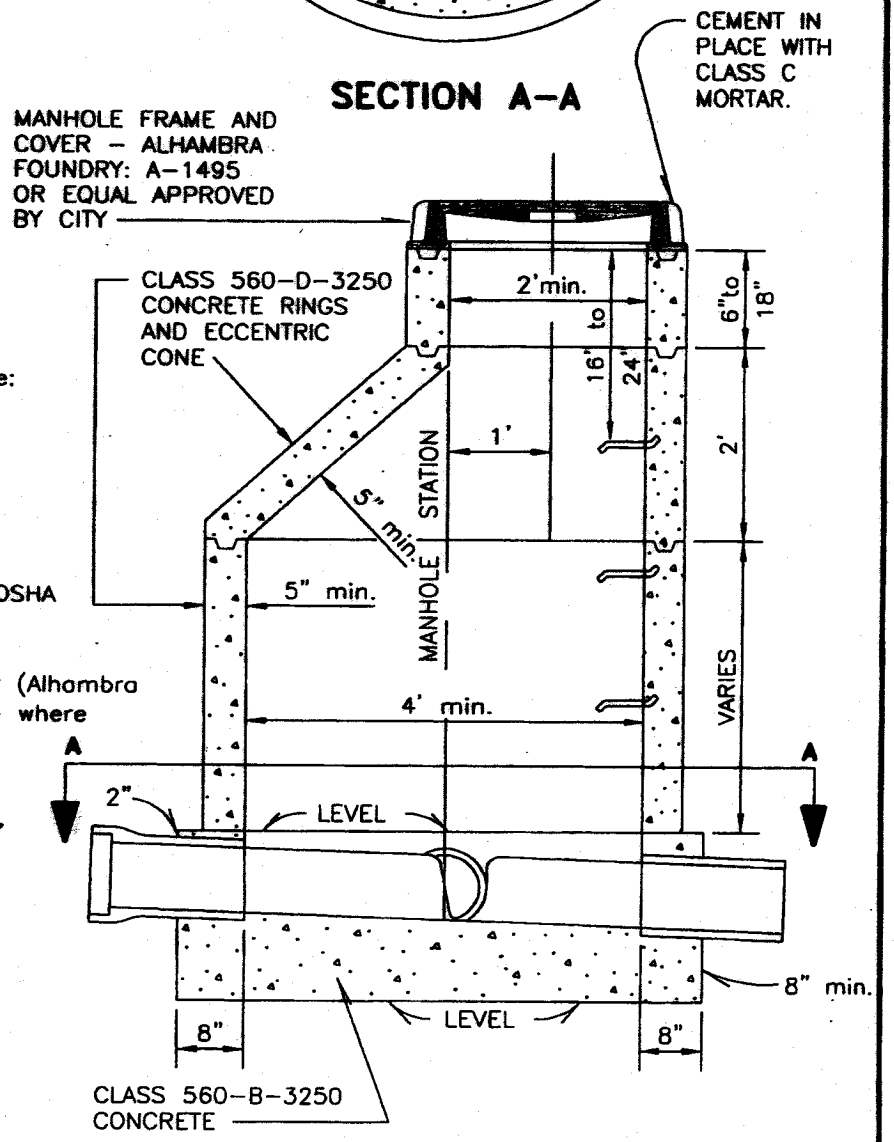

APPROVED Thom Boyd DATE 12/22/03
CITY ENGINEER – R.C.E. 36170

MARK	REVISION	APPR.	DATE

CITY OF RIVERSIDE
PUBLIC WORKS DEPT. – ENGINEERING DIV.

PRECAST CONCRETE SEWER MANHOLE

STANDARD DRAWING NO. 500

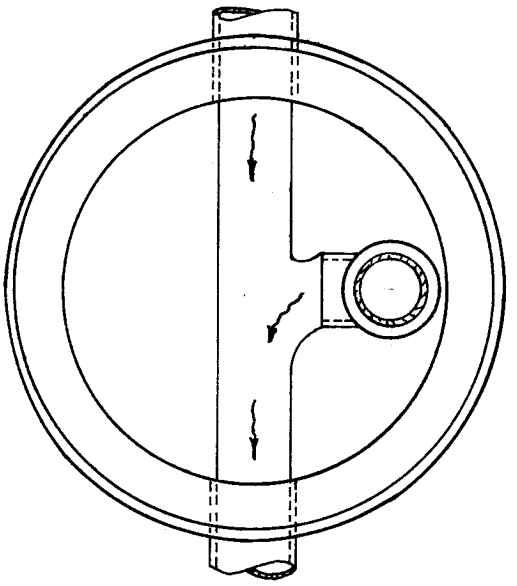

SECTION A–A

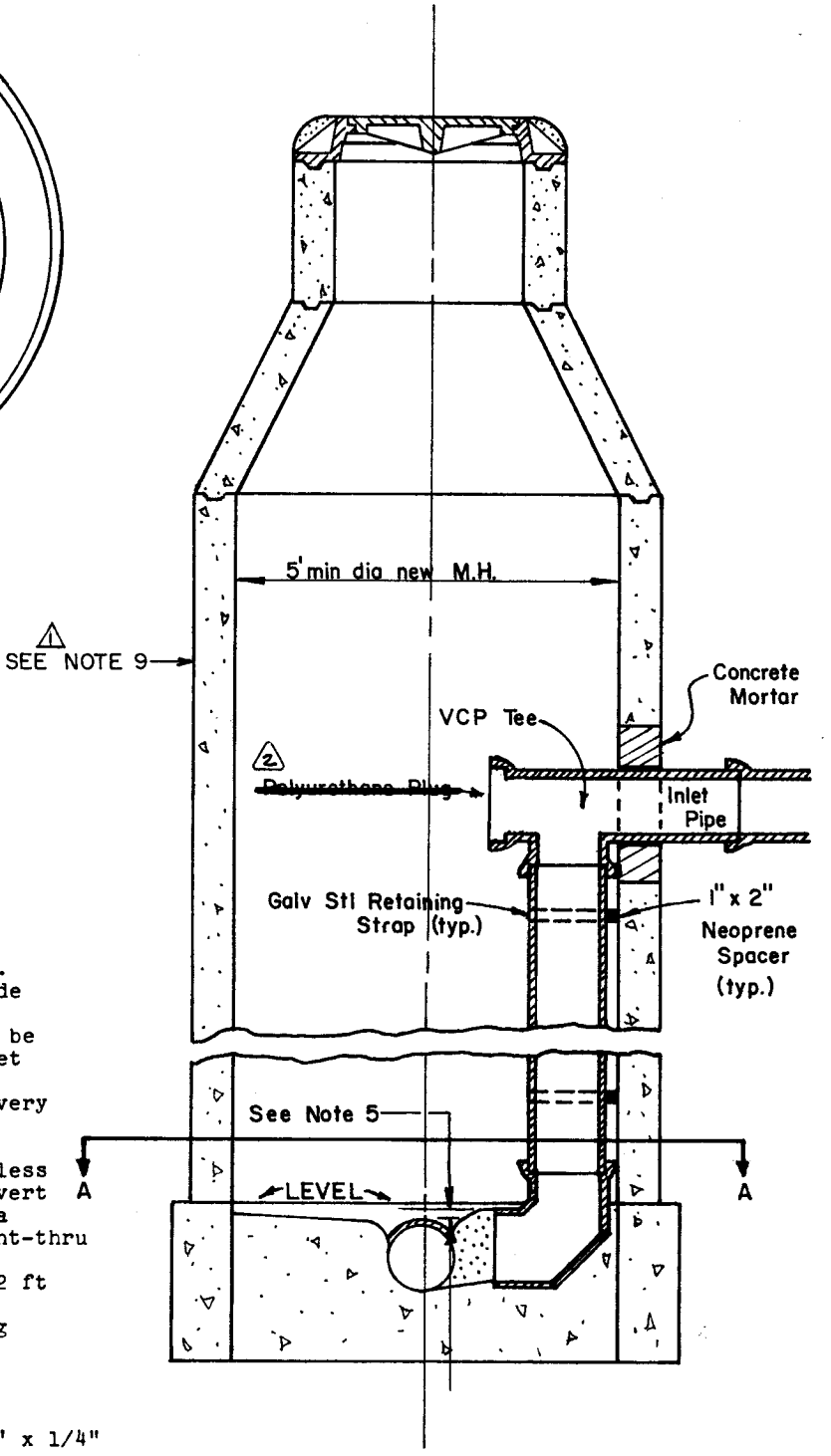

NOTES

1. Class 560-C-3250 Concrete to be used.
2. Pipe and fittings to be 8" min. inside diameter.
3. If no stubs exist, the manhole is to be broken through and stubs are to be set to grade in concrete.
4. Form a concrete mortar arch around every pipe opening into manhole.
5. Crown of inlet to be 0.10 ft higher than crown of straight-thru sewer unless otherwise noted. Concrete formed invert to be shaped thru existing shelf in a smooth curve to meet existing straight-thru invert.
6. 3.0 ft desireable minimum drop. 1.82 ft absolute minimum.
7. Install neoprene spacers at retaining straps, bells, and between concrete mortar and inlet pipe.
8. Install 2 (two) 1" x 3/8" Galv Stl retaining straps per joint of pipe. Anchor straps to MH shaft with 1 1/2" x 1/4" Galv Stl lag screws and lead anchors. (1)
9. See Std. Dwg. 500 for manhole construction details.

APPROVED Robert C. Wells DATE 12/27/84
PUBLIC WORKS DIRECTOR - R.C.E. 18793

MARK	REVISIONS	APPR.	DATE
1	ADDED NOTE 9.	[illegible]	6-12-86
2	DELETED PLUG.	TJB	5/25/04

CITY OF RIVERSIDE

PUBLIC WORKS DEPT. - ENGINEERING DIV.

DROP MANHOLE

STANDARD DRAWING NO. 503

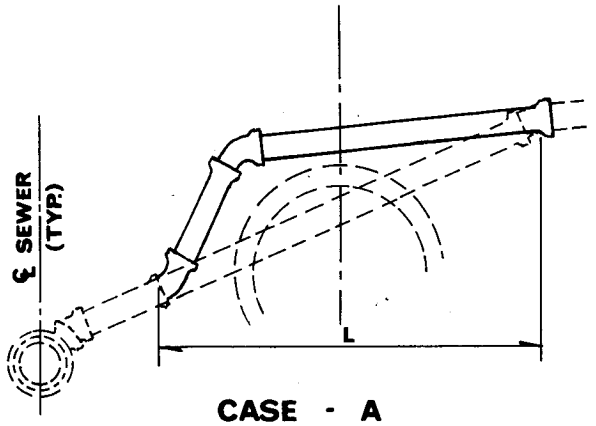

CASE - A

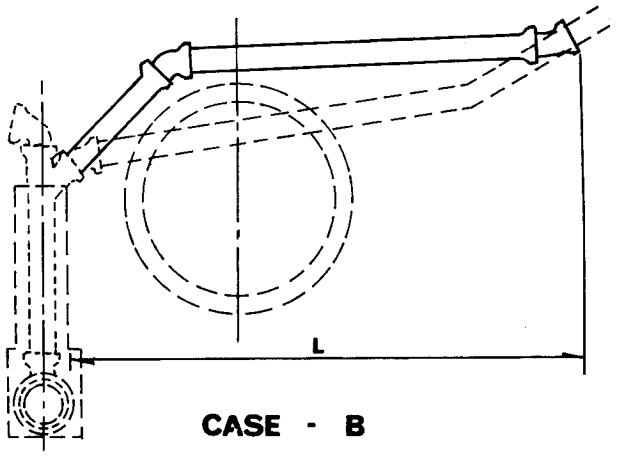

CASE - B

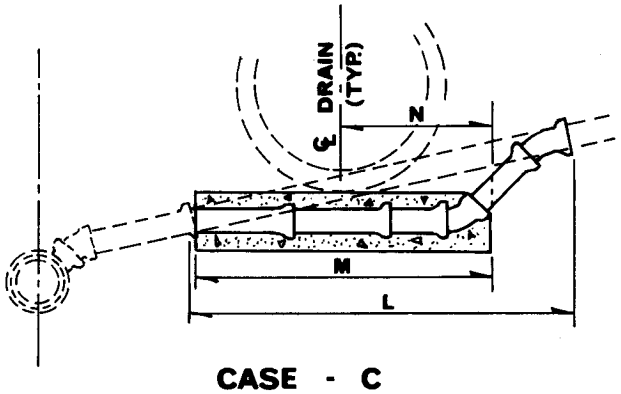

CASE - C

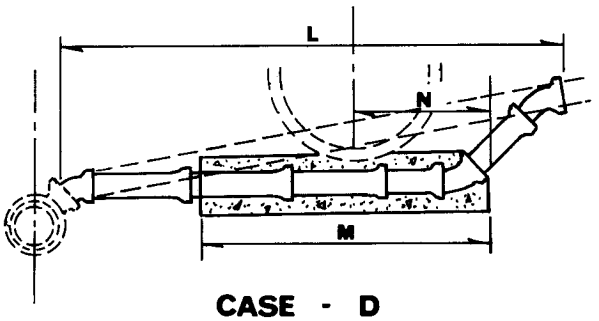

CASE - D

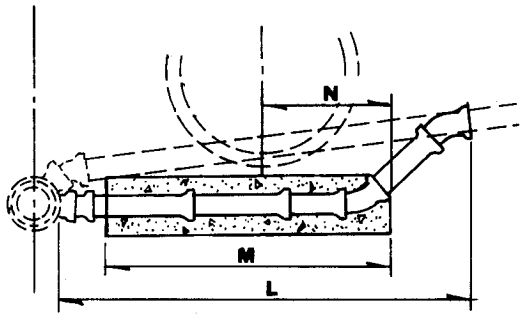

CASE - E

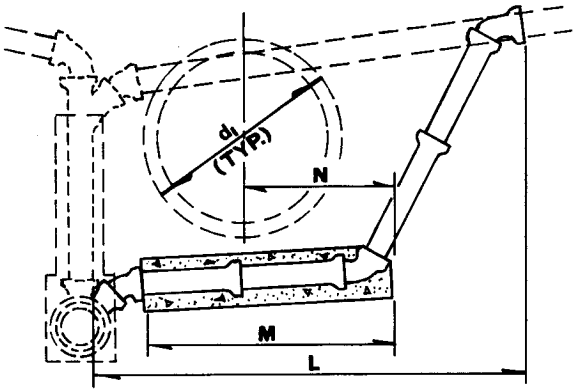

CASE - F

SEE SHEET 2 FOR NOTES AND DESCRIPTION OF CASES

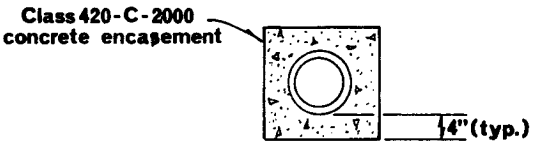

CROSS SECTION OF CONCRETE REINFORCEMENT FOR PIPE.

APPROVED Robert C. Wales DATE 5/28/78
PUBLIC WORKS DIRECTOR - R.C.E. 18793

MARK	REVISIONS	APPR.	DATE

CITY OF RIVERSIDE

PUBLIC WORKS DEPT. - ENGINEERING DIV.

REMODELING DETAILS FOR SEWER LATERALS

STANDARD DRAWING NO. **554**

Sheet 1 of 2

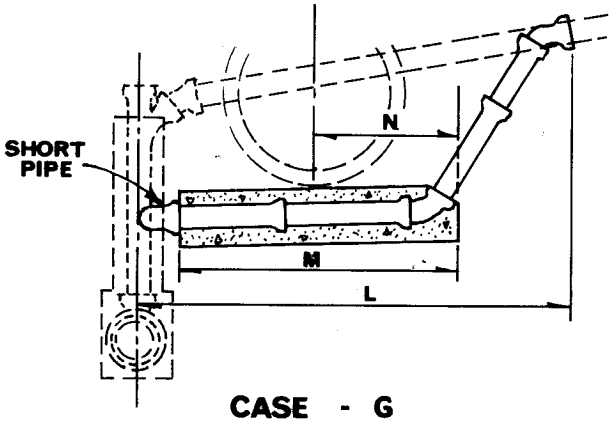

CASE - G

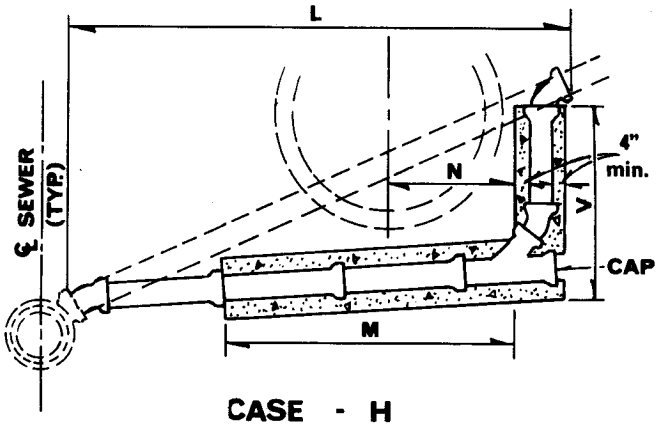

CASE - H

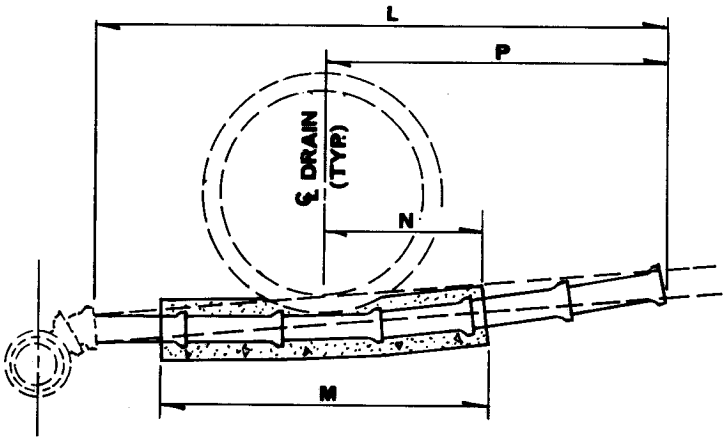

CASE - K

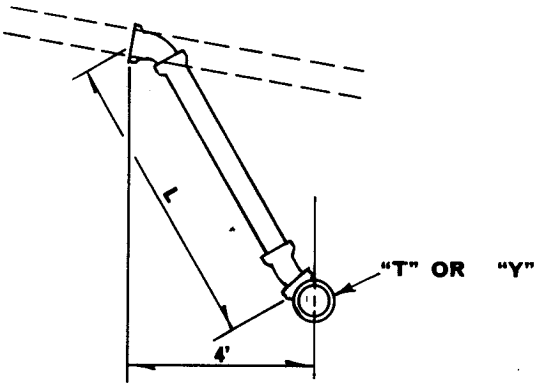

CASE - R

NOTES:

1. These details do not apply to conflicts between sewer laterals and water lines.
2. Existing pipes are indicated by broken lines.
3. Pipes to be constructed are indicated by solid lines.
4. All pipe diameters shall match existing lateral.
5. All bends shall be 1/8 bends unless specified otherwise.
6. Concrete reinforcement, cross section shown on sheet 1, shall be used on all pipes to be constructed under storm drain, top portion within 1" of storm drain to be omitted.
7. Dimensions:

   L is specified on plan as the average total length.
   M = (d_1 + 24") less enough to avoid a fraction of a foot.
   N 1/2 M, except where specified otherwise on plan.
   P_1 (case K) is specified where L does not extend to the bend.
   V_1 (case H) is specified to the nearest foot and in summary, is itemized as Concrete Reinforcement for 6" pipe.
8. New connection to main line shall conform to standard drawing no. 562.
9. Joints shall be type D, F, or G per the latest approved edition of Standard Specifications for Public Works Construction.
10. Material used for replacement segment shall be the same as the material used for the existing lateral.

CASES:

A. Above Drain to House Connection - Specials required: 2 1/8 Bends.
B. Above Drain to Chimney - 2 1/8 Bends.
C. Below Drain to House Connection - 2 1/8 Bends.
D. Below Drain to "Y" - 3 1/8 Bends.
E. Below Drain to Flat Saddle - 3 1/8 Bends, 1 Saddle.
F. Below Drain to Saddle - 3 1/8 Bends, 1 Saddle.
G. Below Drain to Chimney - 2 1/8 Bends.
H. Below Drain to "Y" - 3 1/8 Bends, 1 "Y".
K. Below Drain to House Connection, Slope slightly modified.
R. Connection with New Sewer - 2 1/8 Bends with "Y".
   - 1 4" 1/8 Bend with "T".

APPROVED Robert C. Wade DATE 6/28/78
PUBLIC WORKS DIRECTOR - R.C.E. 18793

MARK	REVISIONS	APPR.	DATE
1	ADDED NOTE 10.	TDB	7/14/03

CITY OF RIVERSIDE
PUBLIC WORKS DEPT. - ENGINEERING DIV.

REMODELING DETAILS FOR SEWER LATERALS

STANDARD DRAWING NO. **554**
Sheet 2 of 2

1. Flanged cast iron 45° elbow. Class 150.
2. Flanged cast iron 45° WYE. Class 150.
3. Cast iron reducing flange. Class 150, W/2" Threaded plug.
4. Threaded Class 150 Flange.
5. Pipe support. See Detail Sheet 2.
6. Flanged plug valve. Class 150,
7. Ductile Iron pipe to match diameter of Force Main.
8. Dresser Style 253 Coupling

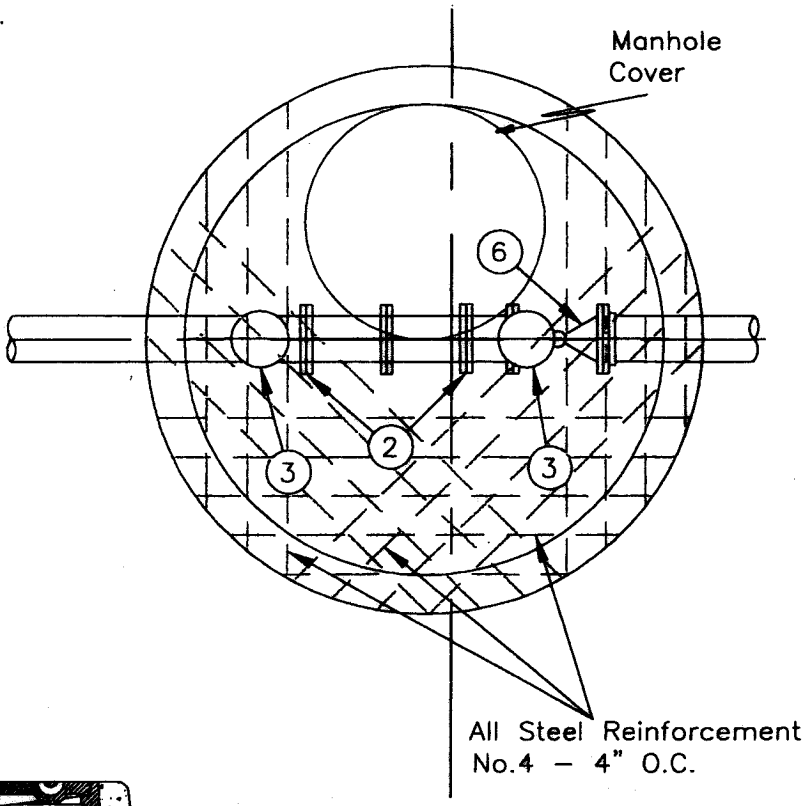

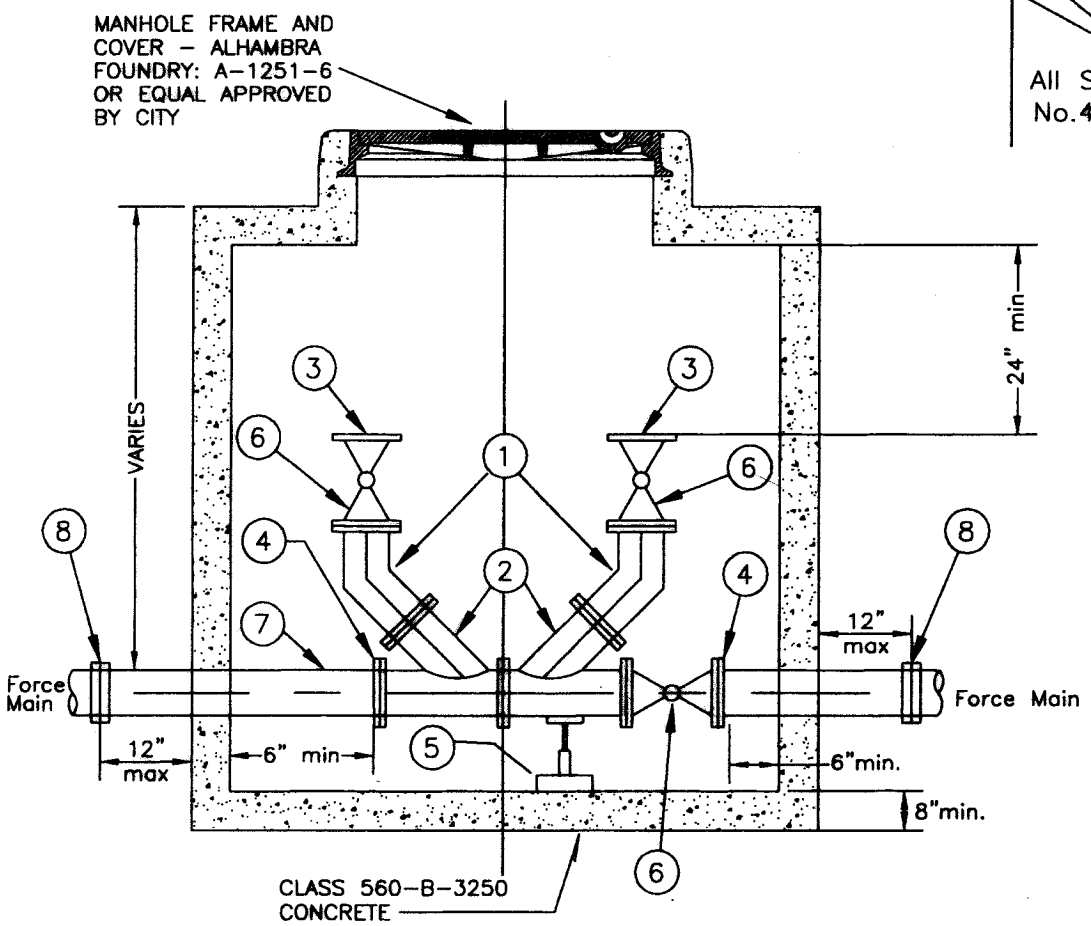

APPROVED [signature] DATE 5/15/04
CITY ENGINEER-R.C.E. 36170

CITY OF RIVERSIDE
PUBLIC WORKS DEPT. – ENGINEERING DIV.

MARK	REVISION	APPR.	DATE

PRECAST CONCRETE FORCE MAIN CLEANOUT

STANDARD DRAWING NO. 559

Sheet 1 of 2

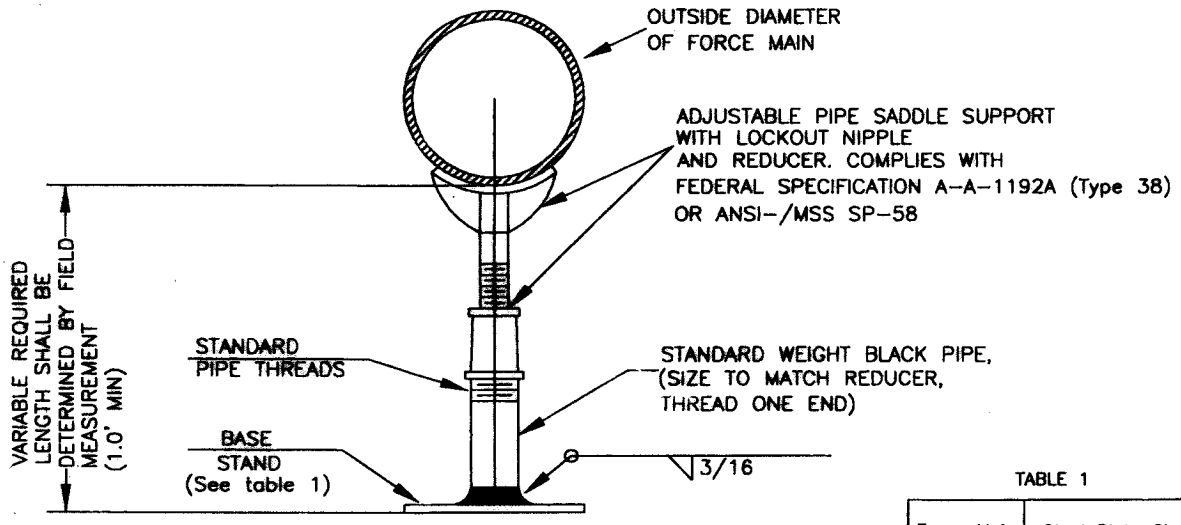

TABLE 1

Force Main	Steel Plate Size
4"	1/2" x 12" x 12"
6"	1/2" x 18" x 18"
8"	5/8" x 18" x 18"
10"	3/4" x 24" x 24"

PIPE SUPPORT DETAIL
NTS

GENERAL NOTES:

1. All fittings shall be same size as the force main.
2. Steps shall be 14" wide stirrup type safety steps. The steps or sockets shall be cast in place at time of manufacture. Steps shall be spaced a maximum of 16" c.c. Material for steps shall be 1/2" grade 60 steel reinforcing rod coated with polypropylene, ASTM D-4101 or City approved equal.
3. Diameter of force main cleanout shall be determined by force main size as in the following table.

Force Main	Manhole Size
4"	72"
6"	72"
8"	78"
10"	84"

4. When force main cleanout is in a street to be paved, manhole frame shall be set after adjacent pavement has been placed. Top shall be flush with pavement.
5. At the contractor's option, thickness of manhole wall may be 4-1/8" provided Class 560-D-4000 concrete is used.
6. Cover shall have letter S in center.

APPROVED [signature] DATE 5/5/04
CITY ENGINEER-R.C.E. 36170

MARK	REVISION	APPR.	DATE

CITY OF RIVERSIDE
PUBLIC WORKS DEPT. - ENGINEERING DIV.

PRECAST CONCRETE FORCE MAIN CLEANOUT

STANDARD DRAWING NO. 559

Sheet 2 of 2

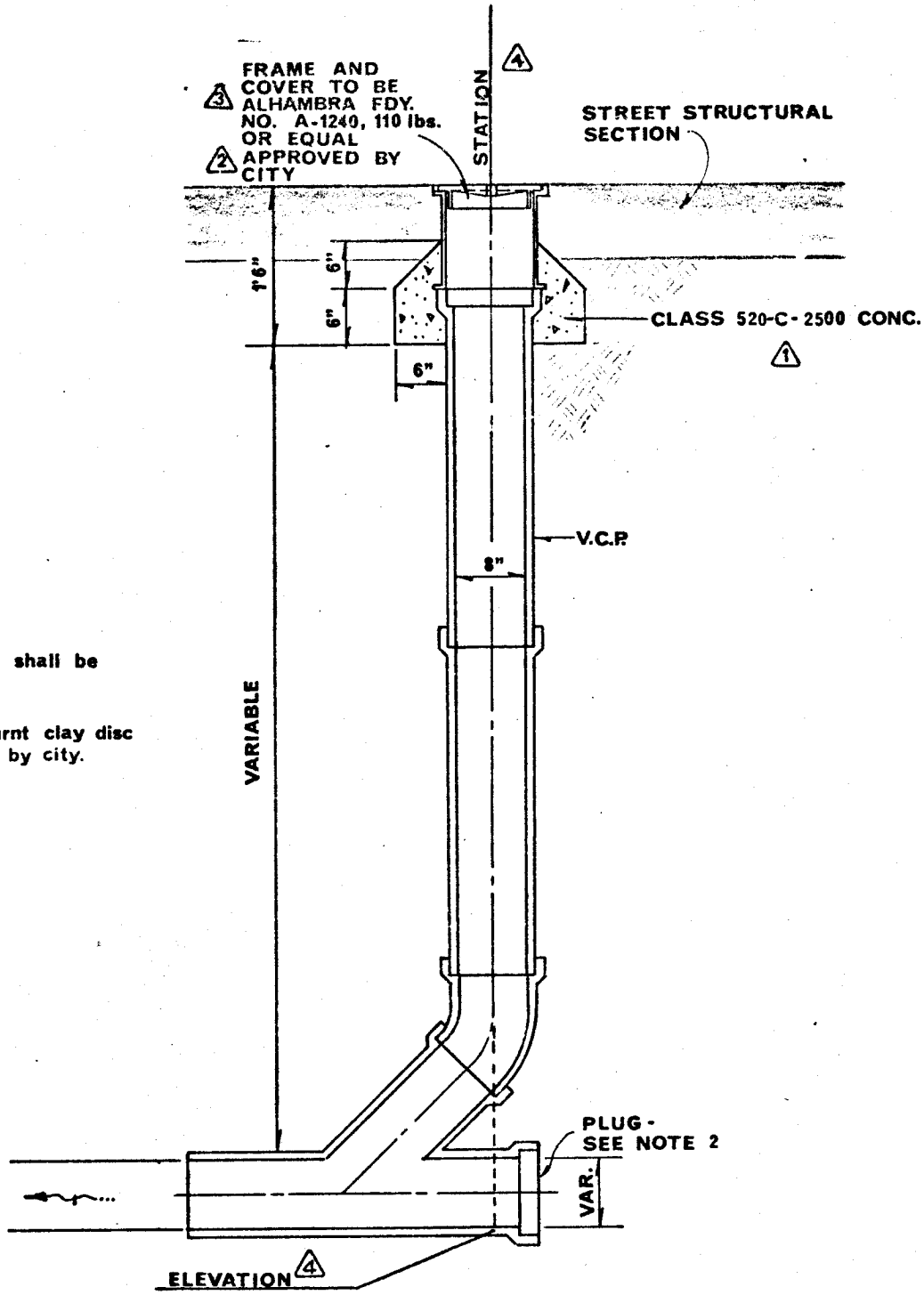

NOTES:

1. Type F or G joints shall be used.
2. Plug stub with burnt clay disc or equal approved by city.

APPROVED [signature] DATE 8-1-83
PUBLIC WORKS DIRECTOR - R.C.E. 8134

MARK	REVISIONS	APPR.	DATE
1	concrete class revision	[illegible]	7-13-83
2	defined approval	D&R	4-7-82
3	Changed Riverside Fdy to Alhambra	[illegible]	7-7-82
4	Added Station & Elevation	[illegible]	10-16-82

CITY OF RIVERSIDE
PUBLIC WORKS DEPT. - ENGINEERING DIV.

SEWER CLEANOUT

STANDARD DRAWING NO. **560**

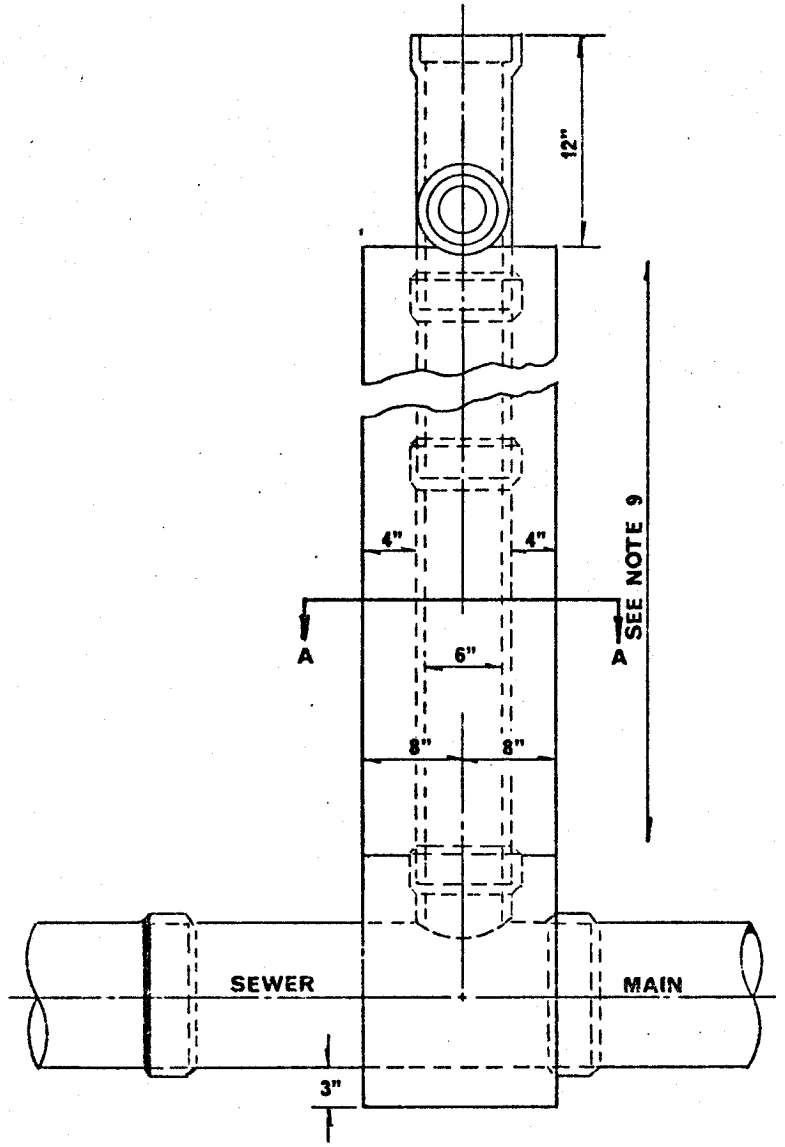

ELEVATION

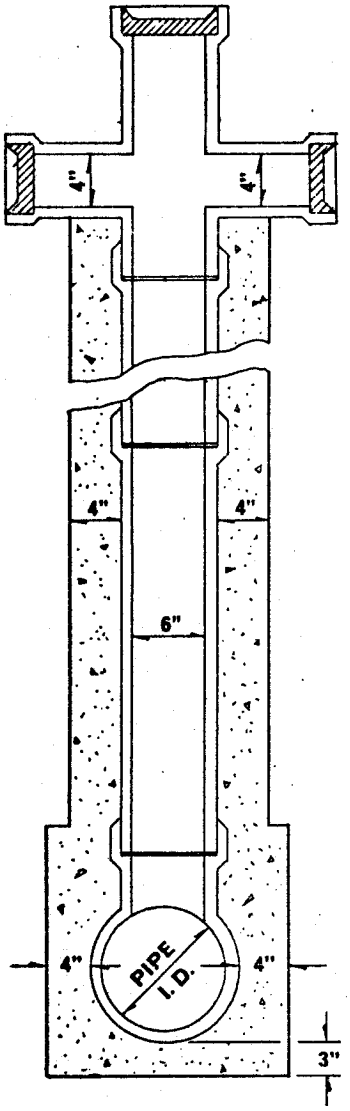

SECTION B-B

NOTES:

1. The upper end of the chimney pipe shall be 5' below the grade of the lower curb, unless otherwise specified
2. Where one or two house connections are to be joined to the chimney pipe use a double "T" branch. Where three house connections are to be joined use double "T" branch and one single tee.
3. Face "T" toward property to be served.
4. When there is material difference in elevation of property on either side of the main line sewer, disregard note 3 and face "T" branch toward the lower side of the street.
5. 16" irrigation type pipe or circular encasement with a minimum diameter of 16" may be used in lieu of concrete encasement shown here. Pipe encasement shall be filled with concrete.
6. Pour base against firm undisturbed soil.
7. Top of chimney and "T's" not used shall be plugged with manufactured plug.
8. Class 520-C-2500 concrete to be used.
9. In lieu of encased V.C.P. contractor may install cast iron pipe with encasement only around the main line tee.

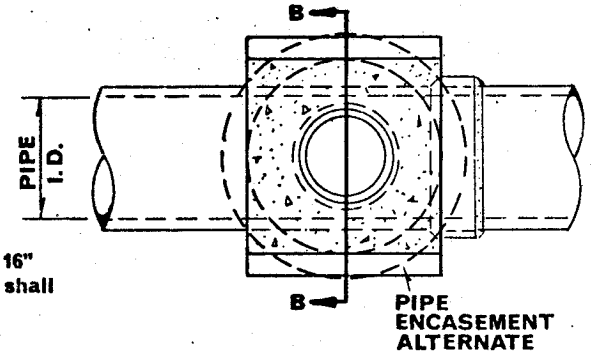

SECTION A-A

APPROVED Robert C. Wahlu DATE 7/14/78
PUBLIC WORKS DIRECTOR - R.C.E. 18793

MARK	REVISIONS	APPR.	DATE

CITY OF RIVERSIDE

PUBLIC WORKS DEPT. - ENGINEERING DIV.

STANDARD CHIMNEY PIPE

STANDARD DRAWING NO. **561**

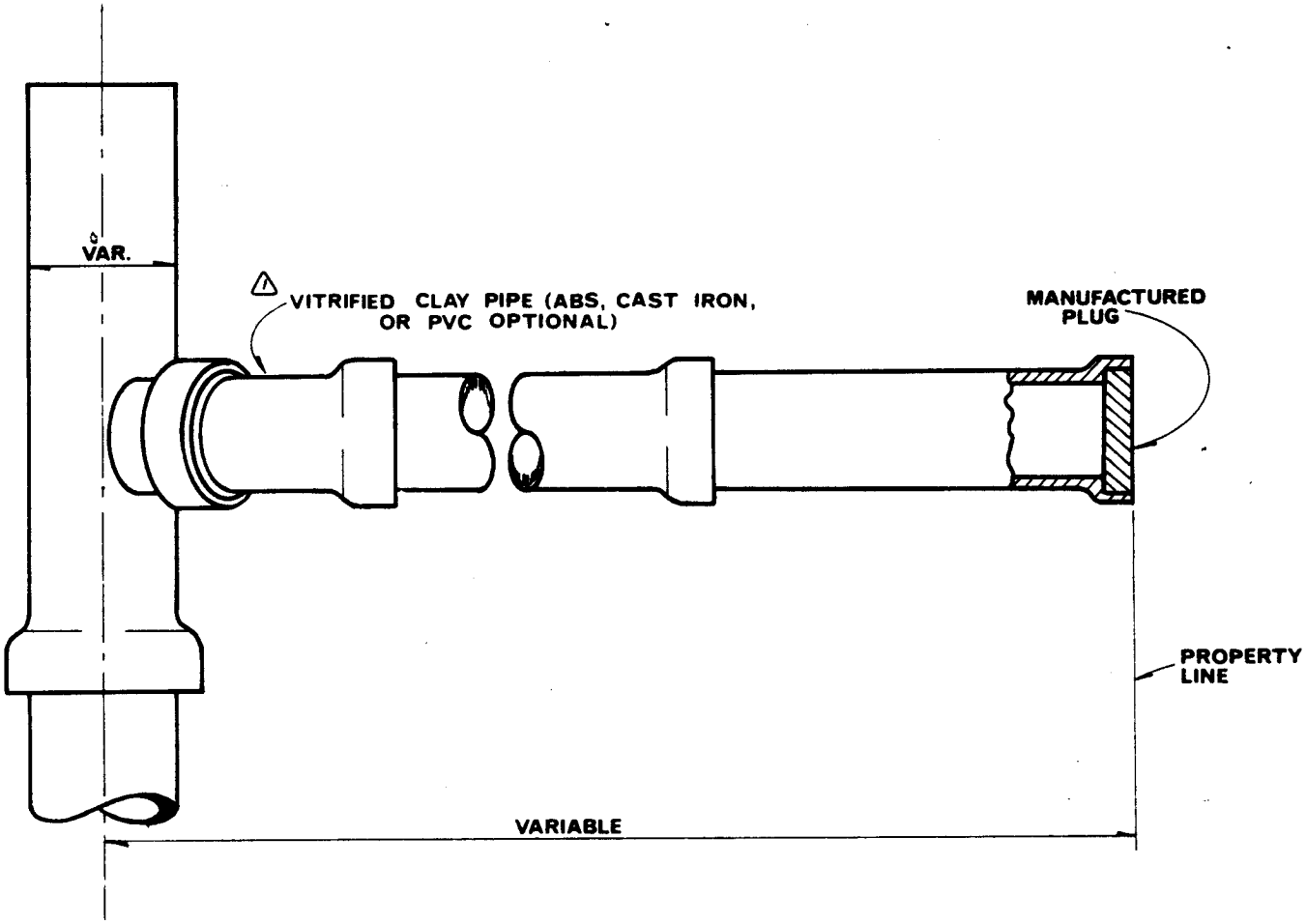

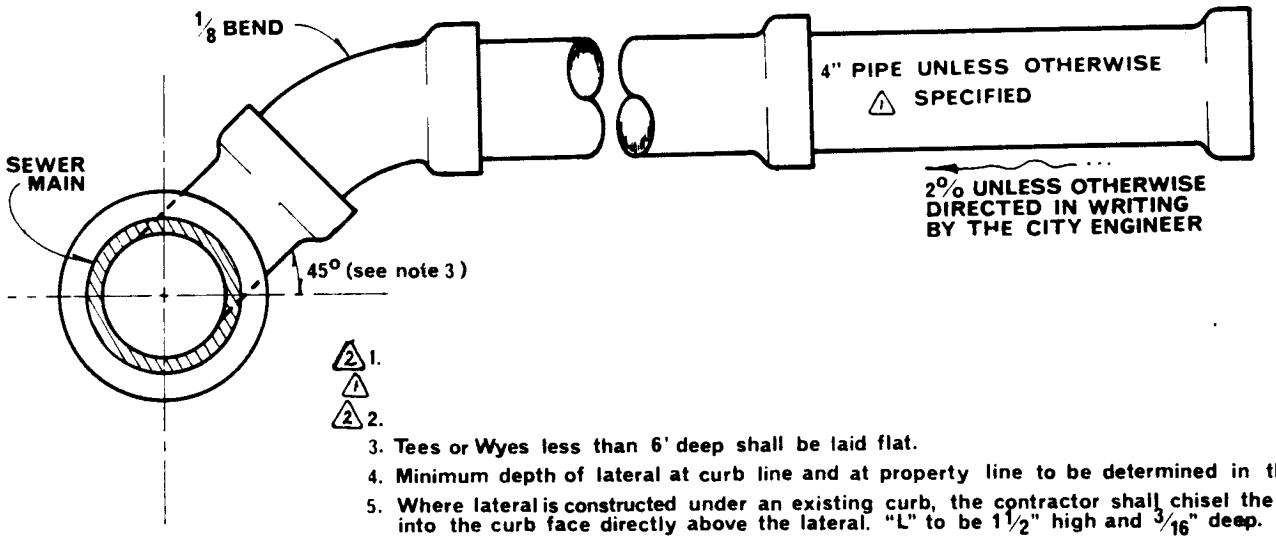

1.
2.
3. Tees or Wyes less than 6' deep shall be laid flat.
4. Minimum depth of lateral at curb line and at property line to be determined in the field.
5. Where lateral is constructed under an existing curb, the contractor shall chisel the letter "L" into the curb face directly above the lateral. "L" to be 1 1/2" high and 3/16" deep.
6. Backfill over laterals to be compacted by tamping only.
7. For connection to mains less than 12" make connections Wye, Tee, or Saddle Tee.
8. For connection to mains 12" or larger make connections with cored hole and Saddle Tee.

APPROVED _____ DATE _____
PUBLIC WORKS DIRECTOR - R.C.E 18793

MARK	REVISIONS	APPR.	DATE
1	CHANGED: NOTE 1; ADDED: NOTE 2, ABS & PVC OPT, 4" PIPE LABEL. ADDED NOTE 7 / NOTE 8.		
2	DELETED NOTES 1 & 2.		

CITY OF RIVERSIDE
PUBLIC WORKS DEPT. - ENGINEERING DIV.

SEWER LATERAL

STANDARD DRAWING NO. **562**

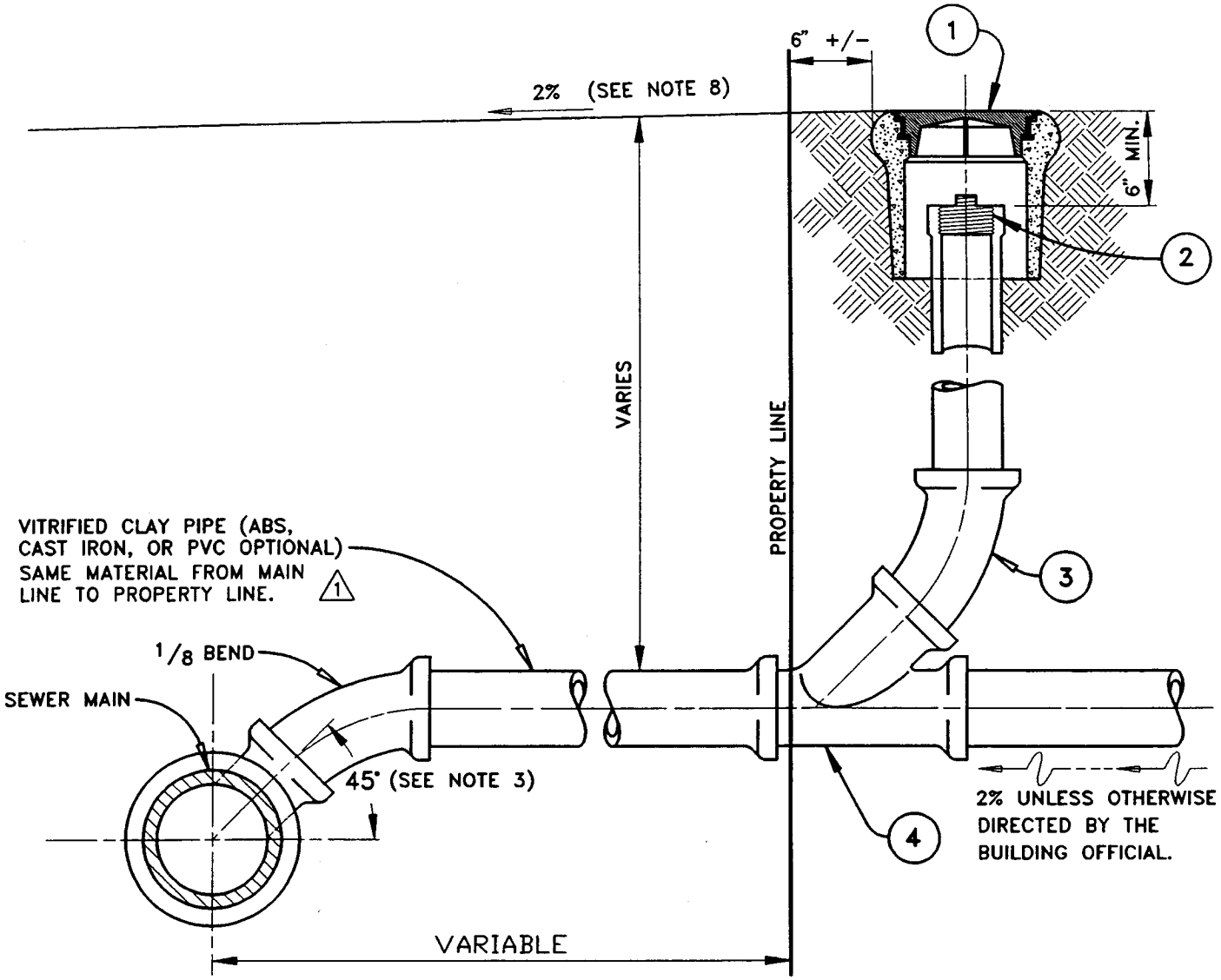

MATERIALS

1. BROOKS #1-RT VALVE BOX OR EQUAL. (MARKED SEWER)
2. THREADED CAP WITH SQUARE NUT.
3. MINIMUM 3" SEWER PIPE.
4. WYE PER UNIFORM BUILDING CODE.

NOTES:

1. PLACE CLEANOUT INSIDE PRIVATE PROPERTY.
2. LID MUST BE CAST IRON FOR LOCATING PURPOSES AND MARKED SEWER.
3. TEES OR WYES LESS THAN 6' DEEP SHALL BE LAID FLAT.
4. MINIMUM DEPTH OF LATERAL AT CURB LINE AND PROPERTY LINE TO BE DETERMINED IN THE FIELD.
5. BACKFILL OVER LATERALS TO BE COMPACTED BY TAMPING ONLY.
6. FOR CONNECTIONS TO MAINS LESS THAN 12" MAKE CONNECTIONS WITH WYE, TEE, OR SADDLE TEE.
7. FOR CONNECTIONS TO MAINS 12" OR LARGER MAKE CONNECTIONS WITH CORED HOLE AND SADDLE TEE.
8. GRADE PARKWAY AT 2% TOWARDS CURB OR BACK OF SIDEWALK OR AS DIRECTED BY THE ENGINEER.
9. WHERE LATERAL IS CONSTRUCTED UNDER AN EXISTING CURB, THE CONTRACTOR SHALL CHISEL THE LETTER "L" INTO THE CURB FACE DIRECTLY ABOVE THE LATERAL. "L" TO BE 1-1/2" HIGH & 3/16" DEEP.

APPROVED Barry Beck DATE 2/27/97
PUBLIC WORKS DIRECTOR - R.C.E. 20900

MARK	REVISIONS	APPR.	DATE
1	REVISED MATERIAL DESCRIPTION.	JFB	7/16/03

CITY OF RIVERSIDE

PUBLIC WORKS DEPARTMENT - ENGINEERING DIVISION

SEWER LATERAL with PL C.O.

STANDARD DRAWING NO. **562A**

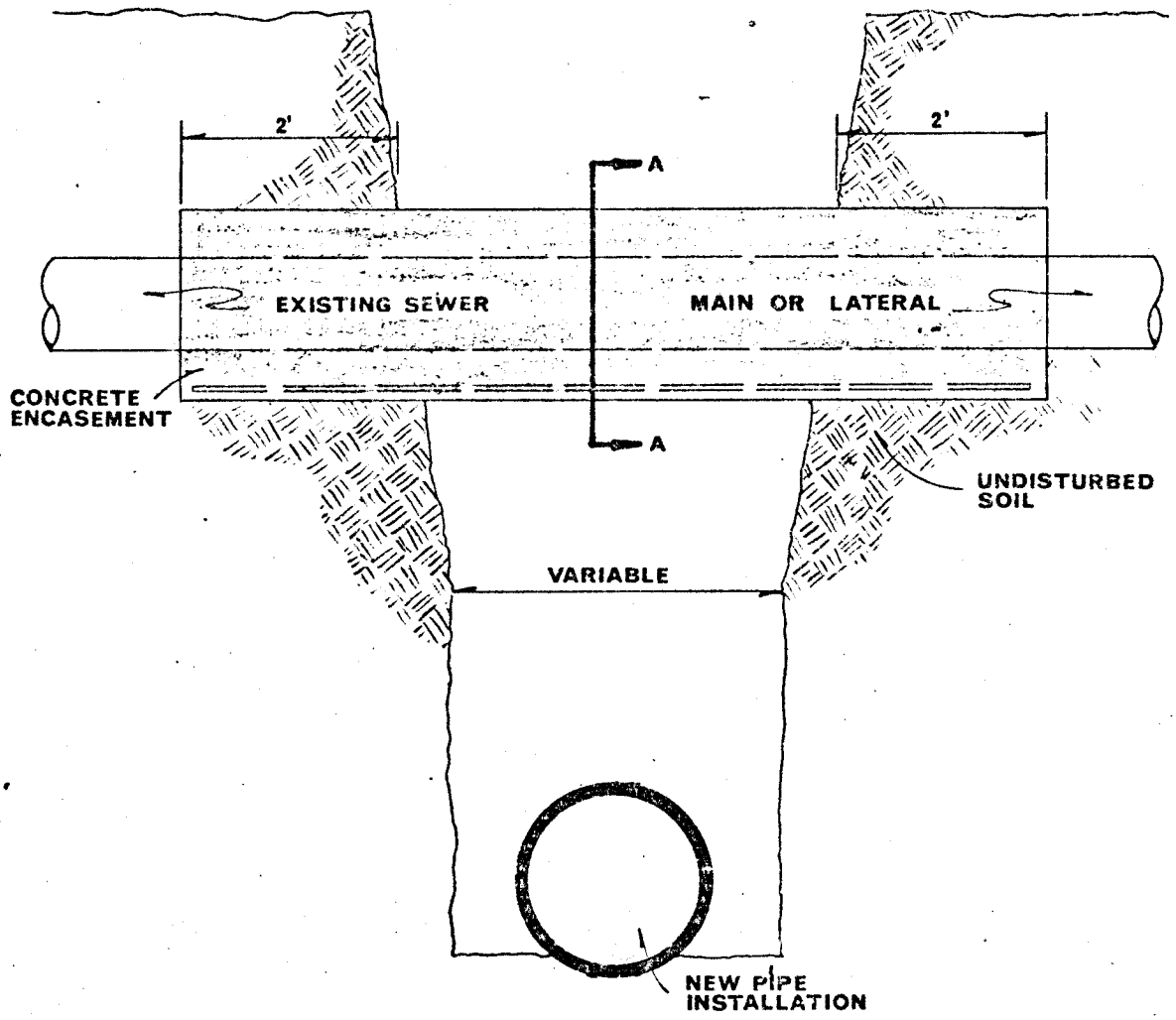

NOTES:

1. Encasement shall be required for trench width 2' or greater.
2. A sewer lateral may be replaced with cast iron pipe in lieu of encasement. The cast iron pipe shall have the same diameter as the existing lateral and the length shall be the same as would have been required for encasement. Cast iron pipe shall not be used on sewer mains.
3. Reinforcing steel may be omitted if trench width is less than 3'.
4. For sewer pipe crossings of less than 3' over a water main see P.U.D. Water Division Std. Dwg. No. CWD-021.

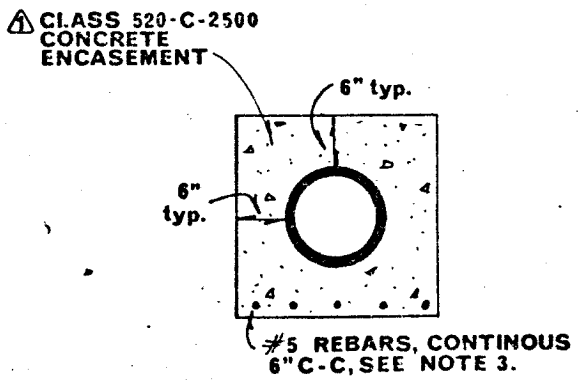

SECTION A-A

APPROVED J. Martinez DATE 7-6-73
PUBLIC WORKS DIRECTOR - R.C.E. 8134

MARK	REVISIONS	APPR.	DATE
1	revised concrete class		7-13-78

CITY OF RIVERSIDE
PUBLIC WORKS DEPT. - ENGINEERING DIV.

SEWER PIPE ENCASEMENT ACROSS TRENCHES

STANDARD DRAWING NO. 564

LEGEND

Existing	Proposed	
		PEDESTRIAN SIGNAL, 2-COLOR HEAD
		PULLBOX
		DIRECTIONAL PRESSURE DETECTOR
		NON-DIRECTIONAL PRESSURE DETECTOR
		LOOP DETECTOR
		CONTROLLER
		TRAFFIC SIGNAL, EACH ARROW ONE-WAY, 3-COLOR (WITH 8" LENSES UNLESS OTHERWISE SPECIFIED).
		TRAFFIC SIGNAL, ONE-WAY, 3-COLOR WITH BACKPLATE.
		TRAFFIC SIGNAL, ONE-WAY, 3-COLOR (WITH GREEN 12" ARROW & ARROW MASK). RED & YELLOW LOUVERED 8" LENSES.
		WALK-DON'T WALK PEDESTRIAN SIGNAL.
		MASTARM TRAFFIC SIGNAL WITH BACKPLATE (12" LENSES).
		ELECTROLIER (LUMINAIRE) W/INTEGRAL BALLAST, MASTARM TYPE WITH MASTARM TRAFFIC SIGNAL W/BACKPLATE
		ELECTROLIER W/INTEGRAL BALLAST, MASTARM TYPE.
		ELECTROLIER, UPRIGHT TYPE
PPB	PPB	PEDESTRIAN PUSHBUTTON, INDICATING POSITION ON STANDARD
		FEED POINT (POWER POLE OR TYPE I STANDARD)
		FLASHING BEACON, ONE WAY
L	L	TRAFFIC SIGNAL WITH ALL COLORS LOUVERED
		PROGRAMMED VISIBILITY TRAFFIC SIGNAL HEAD (12" LENSES UNLESS OTHERWISER SPECIFIED).

APPROVED [signature]
CITY TRAFFIC ENGINEER
DATE 7/12/69

STANDARD SYMBOLS
TRAFFIC SIGNALS & LIGHTING

CITY OF RIVERSIDE, CALIFORNIA

STANDARD DRAWING NO. 600

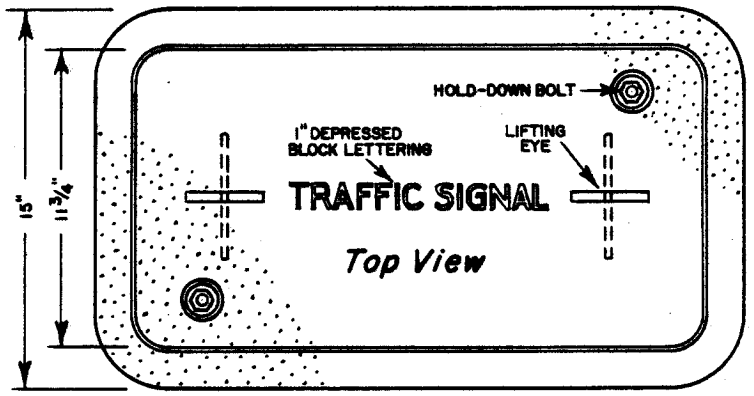

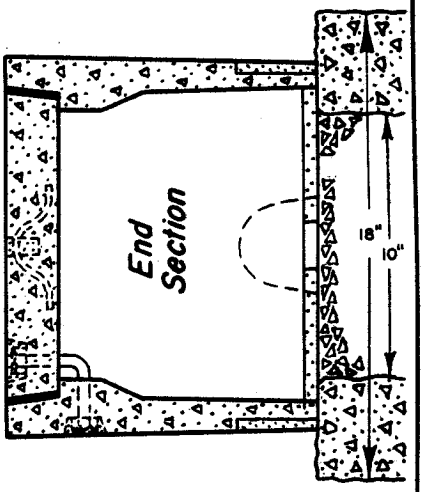

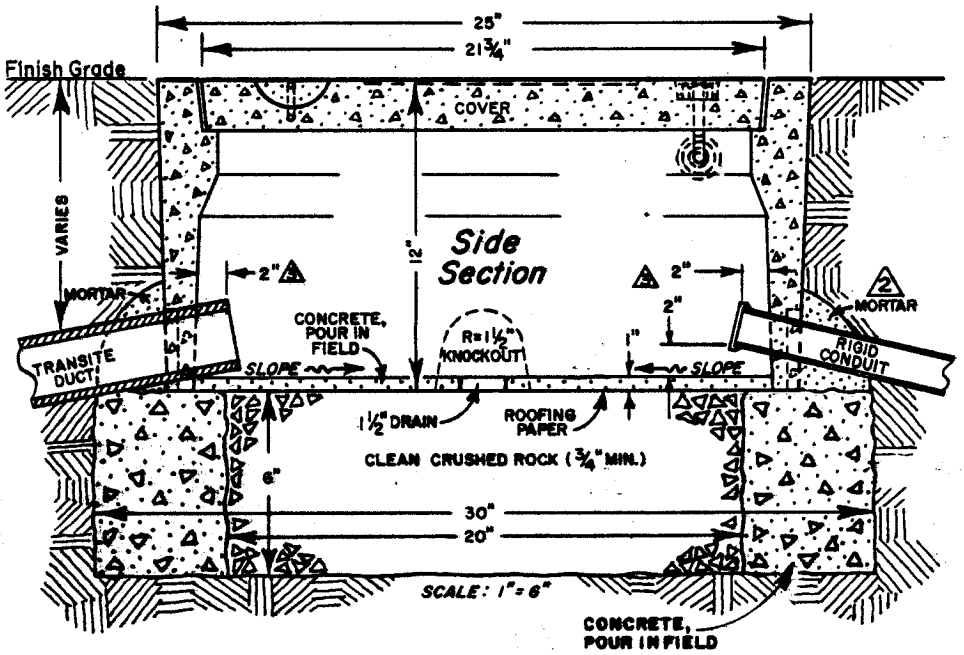

NOTES

1. PULL BOXES SHALL BE NO. 5 EXCEPT AS INDICATED.
2. PULL BOXES SHOWN IN THE VICINITY OF CURBS SHALL BE PLACED ADJACENT TO BACK OF CURB, EXCEPT WHEN IN CONFLICT WITH EXISTING FACILITIES.
3. TOP OF PULL BOXES SHALL BE LEVEL WITH CURB OR SIDEWALK GRADE OR 1" ABOVE SURROUNDING GROUND WHEN NO FINISHED GRADE IS ESTABLISHED.
4. PULL BOXES SHOWN ADJACENT TO STANDARDS SHALL BE INSTALLED AGAINST, BUT NOT ON ROADWAY SIDE OF FOUNDATION.
5. PULL BOXES SHALL BE SET IN CONCRETE.
6. STEEL REINFORCING SHALL BE AS REGULARLY USED IN THE STD. PRODUCTS OF THE RESPECTIVE MANUFACTURER.
7. PULL BOXES SUBJECT TO TRAFFIC LOADS TO HAVE SUITABLE STEEL OR CAST IRON COVER.
8. EXTENSION TO BE USED WHEN BOX IS FOR BALLAST TRANSFORMER.
9. BONDING JUMPER TO BE CONNECTED TO ALL RIGID CONDUIT IN ALL PULL BOXES.
10. BOTTOM OF PULL BOXES SHALL BE GROUTED 1" MIN. THICKNESS W/1" DRAIN

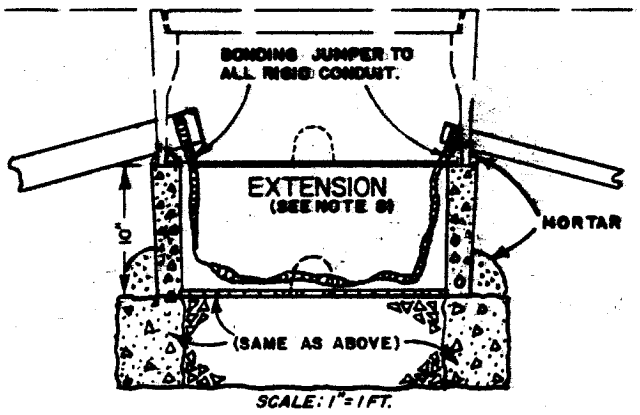

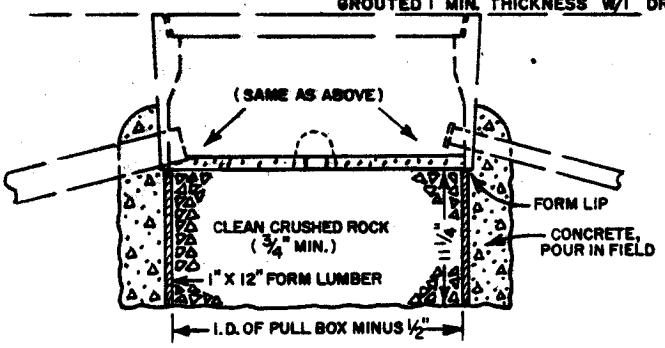

ALTERNATE METHOD of setting pull boxes.
SCALE: 1"=1 FT.

Approved J. Martinez
Date 2-3-58 City Engineer H.Ball

REVISIONS

DATE	MARK	BY	APPROVED
3-28-58	1	H. BALL	
4-18-60	2	R.M.	GENERAL REVISIONS
3-2-70	3	E.J.	

TRAFFIC SIGNAL PULL BOX

CITY OF RIVERSIDE, CALIFORNIA

TRAFFIC AND PARKING DIV., DEPT. OF PUBLIC WORKS

STANDARD DRAWING NO. 606

NOTES-

1. ALL JOINTS IN CONDUIT, BOXES, ETC., TO BE THREADED WEATHERPROOF CONNECTIONS.

2. ON CITY LIGHT DEPT. POLES, CONTRACTOR SHALL STUB 1 1/2" CONDUIT UP POLES 8'-2" ABOVE GROUND LEVEL AND LEAVE AT LEAST 3 FT. OF SLACK IN ALL CONDUCTORS. LIGHT DEPT. WILL FURNISH AND INSTALL WEATHERPROOF ENCLOSURE, CIRCUIT BREAKER(S), GROUND ROD, GROUND CONDUIT, WEATHER HEAD, RISER CONDUIT, CONDUCTORS, ETC., UNLESS OTHERWISE NOTED ON PLANS.

3. ON CONTRACTOR FURNISHED SERVICE POLES, CONTRACTOR SHALL FURNISH AND INSTALL POLE, 1 1/2" CONDUIT STUB 8'-2" ABOVE GROUND LEVEL, WEATHERPROOF ENCLOSURE, CIRCUIT BREAKER(S), GROUND ROD, GROUND CONDUIT, WEATHER HEAD, RISER CONDUIT AND CONDUCTORS, CONDUCTORS WILL HAVE AT LEAST 3 FT. OF SLACK AT THE WEATHER HEAD. CITY LIGHT DEPT. WILL RUN SERVICE TO WEATHER HEAD UPON PAYMENT OF LINE EXTENSION FEE, UNLESS OTHERWISE NOTED ON PLANS.

4. EXACT POSITION OF 1 1/2" CONDUIT STUB TO BE LOCATED ON QUADRANT OF POLE AS DIRECTED BY THE CITY LIGHT DEPT.

5. COMBINED SERVICE FOR SIGNALS AND LIGHTING SHALL BE AS INDICATED FOR SINGLE SERVICE AS DESCRIBED IN NOTES 2 AND 3 ABOVE, EXCEPT CONTRACTOR SHALL INSTALL 4 NO. 8, ONE BLACK AND ONE WHITE FOR 120V MULTIPLE LIGHTING, TWO BLACK FOR 240V MULTIPLE LIGHTING, ONE RED AND ONE WHITE FOR 120V SIGNAL SERVICE. IN NOTE 3 ABOVE THE WEATHERPROOF ENCLOSURE SHALL BE OF THE TYPE TO CONTAIN ONE D.P. 30A 240V BREAKER FOR LIGHTING SERVICE AND ONE D.P. 30A 120V BREAKER OR TWO S.P. 30A 120V BREAKERS FOR SIGNAL SERVICE, UNLESS OTHERWISE NOTED IN SPECIAL PROVISIONS.

6. PULL BOX FOR UNDERGROUND SERVICE TO BE INSTALLED AS PER STD. DWG. NO. 606 NEAR POLE BASE IF INDICATED ON PLANS. A STEEL PULL BOX MAY BE REQUIRED ON THE SERVICE PANEL INSTEAD OF THE UNDERGROUND BOX INDICATED FOR UNDERGROUND SERVICE, INDICATED ON THE PLANS, OR DIRECTED BY THE TRAFFIC ENG. OR THE SERVING UTILITY.

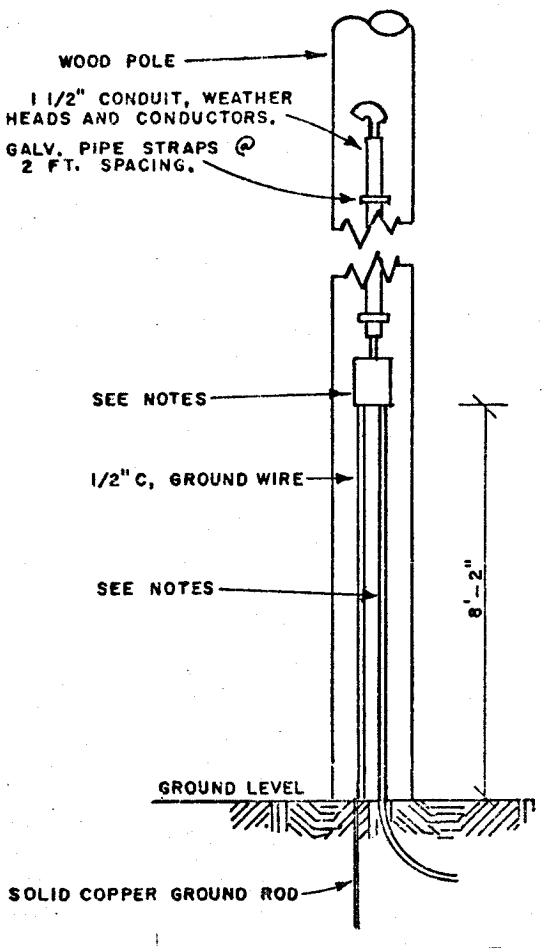

OVERHEAD SERVICE

FOR UNDERGROUND SERVICE DETAILS— SEE DRAWING NO. 667 ⚠1

NO SCALE

APPROVED [signature] TRAFFIC ENGINEER

DATE 10-28-66

REVISIONS			
DATE	MARK	BY	APPROVED
3-2-70 6-19-70	⚠1	E. J. E. J. RKE	[signature] 8-25-80

ELECTRICAL SERVICE DETAILS
SIGNALS & LIGHTING

CITY OF RIVERSIDE, CALIFORNIA

TRAFFIC & PARKING DIV., DEPT. OF PUBLIC WORKS

STANDARD DRAWING NO. 612

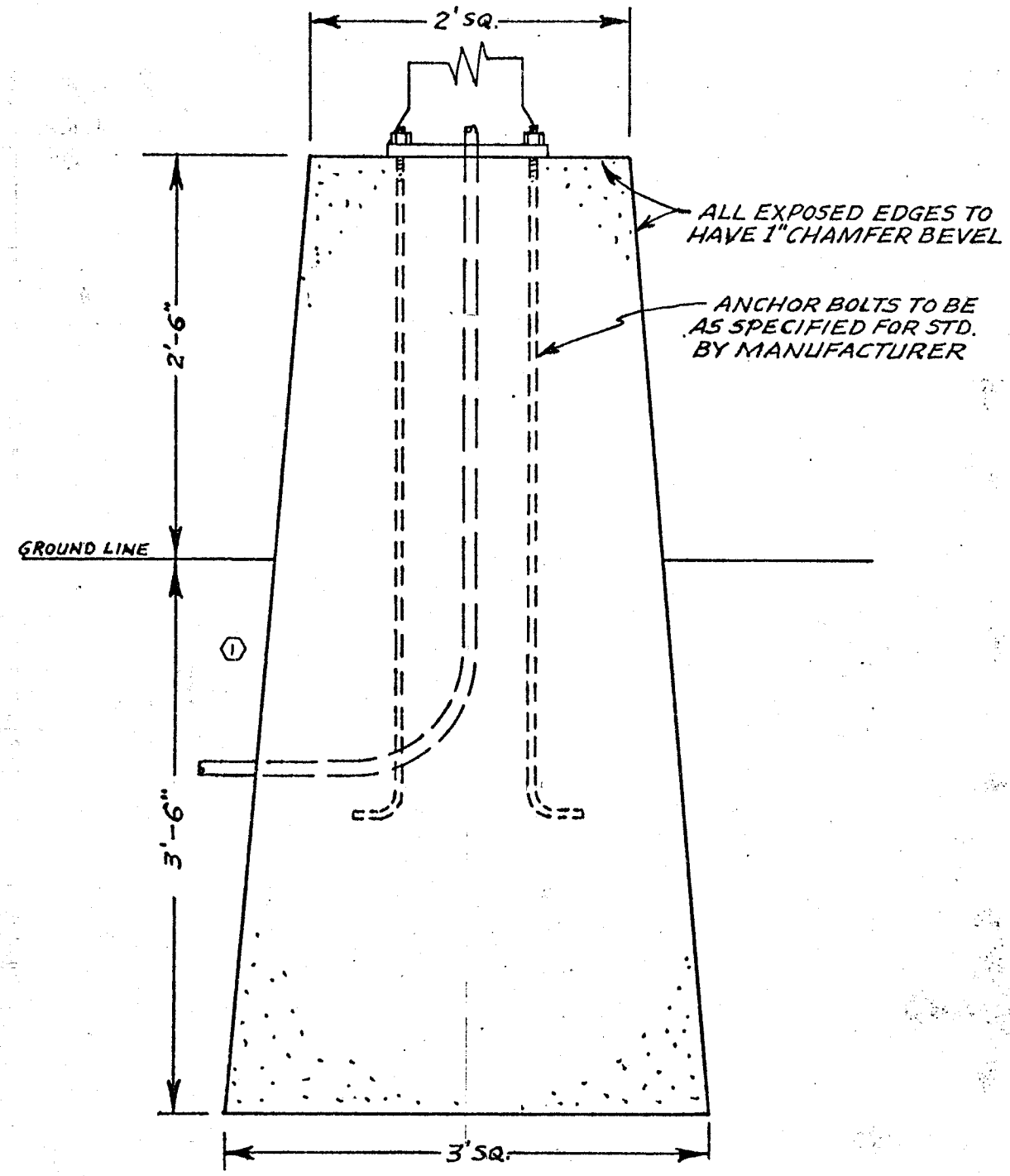

INSTALLATION OF STANDARD SHOWN ON STD. DWGS. FOR VARIOUS TYPES OF STANDARDS OR AS SPECIFIED BY MANUFACTURER.

Approved W. D. Flge
Date 10-14-58 Traffic Engineer

H. Ball

REVISIONS

DATE	MARK	BY	APPROVED
4 5 83	1	BLD	REMOVED REF. TO 631 J

LIGHTING STANDARD FOUNDATION
Parking Lot Type

CITY OF RIVERSIDE, CALIFORNIA

TRAFFIC AND PARKING DIV., DEPT. OF PUBLIC WORKS

STANDARD DRAWING NO. 634

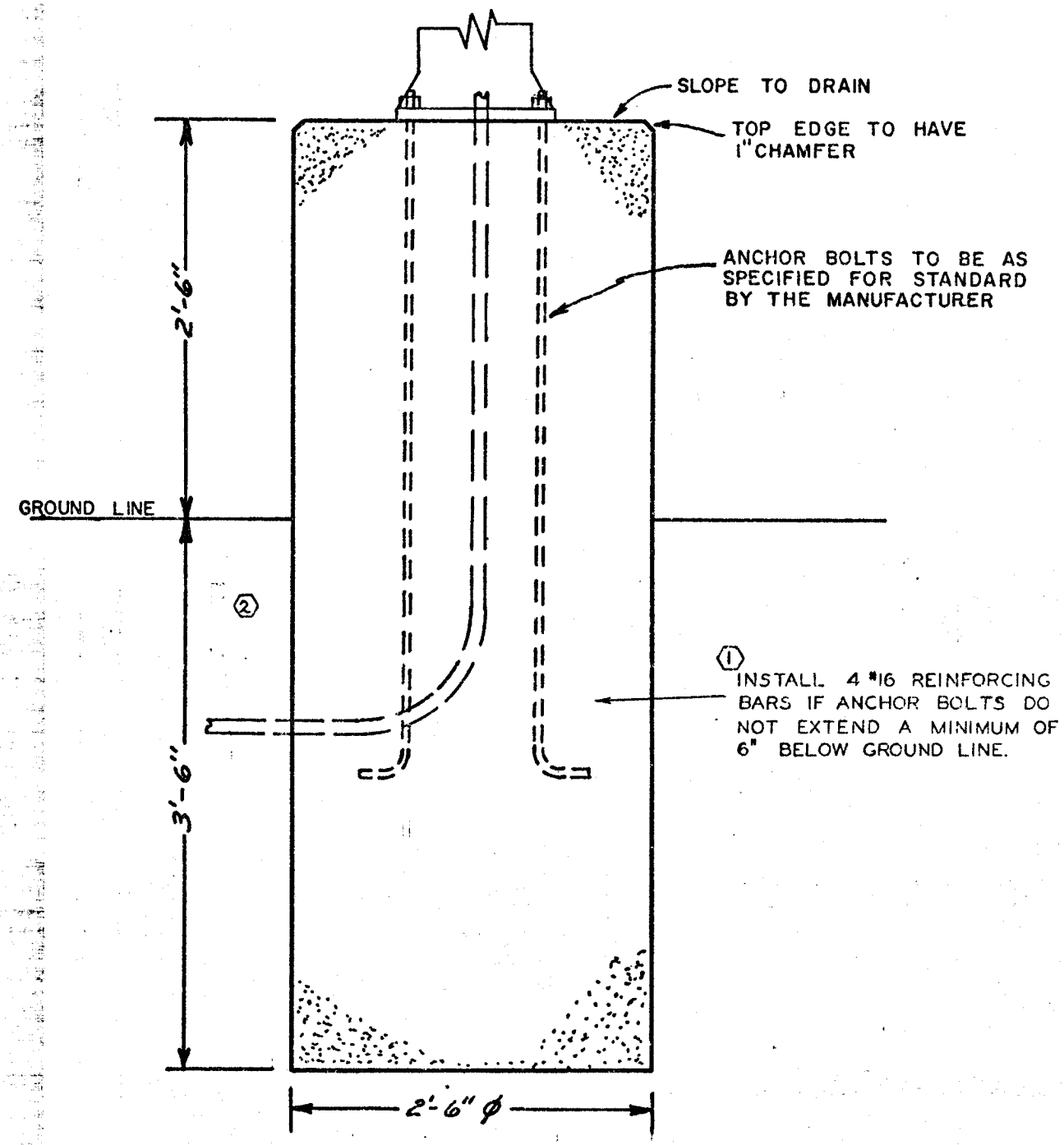

Approved _____ Traffic Engineer
Date 10-14-58

ADD

REVISIONS

DATE	MARK	BY	APPROVED
12 13 63	1	JK	REINF. BAR NOTE
4 5 83	2	BLD	REMOVE REF TO 631

LIGHTING STANDARD FOUNDATION
PARKING LOT TYPE (ROUND)

CITY OF RIVERSIDE, CALIFORNIA

TRAFFIC AND PARKING DIV., DEPT. OF PUBLIC WORKS

STANDARD DRAWING NO. 635

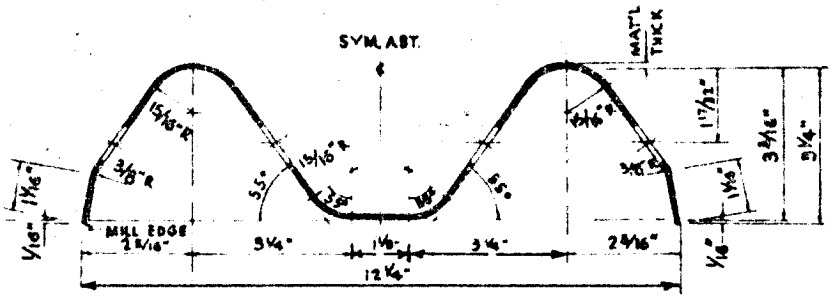

SECTION THRU RAIL ELEMENT

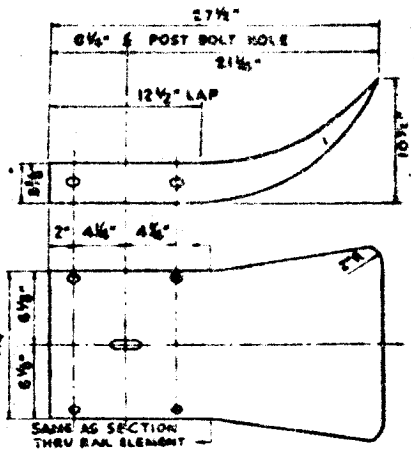

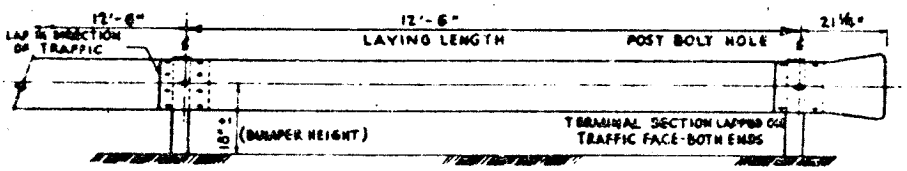

INSTALLATION

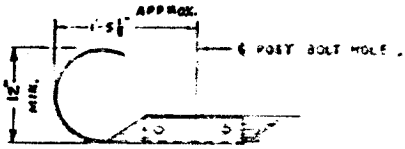

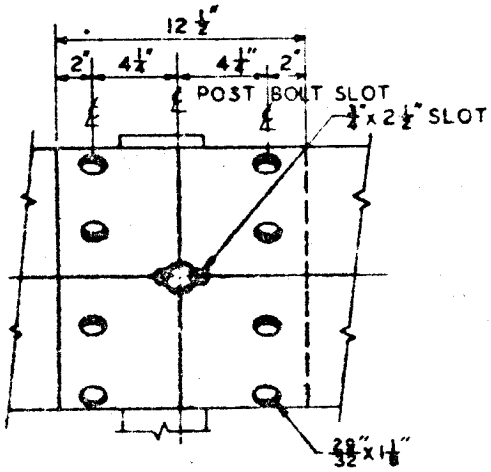

RAIL SPLICE

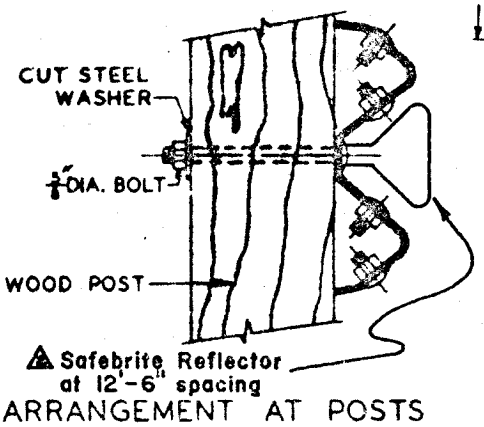

ARRANGEMENT AT POSTS

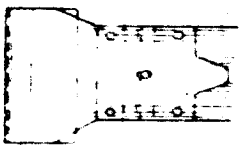

Optional TERMINAL SECTIONS

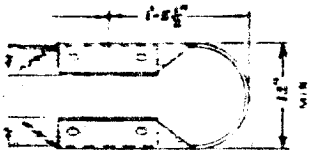

PLAN

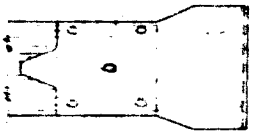

ELEVATION

BACK-TO-BACK ARRANGEMENT FOR MEDIAN STRIPS & PARKING LOTS

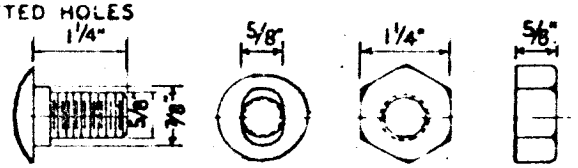

SPLICE BOLT
8 REQ'D PER SPLICE

NUT
9 REQ'D PER RAIL ELEMENT

DIMENSIONS AND MECHANICAL PROPERTIES

Min. Gage ——— 12
Min. x-section area —1.99 sq. in.
Min. Moment of Inertia (Horiz.) —2.30 in.^{4}
Min. Moment of Inertia (Vert.) —30 in.^{4}
Min. Section Modulus —1.37 in.^{3}
Min. Wt. per Ft. ——— 6.80 lbs.

SAFEBRITE REFLECTOR DISTRIBUTOR: ANDERSON GUARD RAIL CORP.
2601 N. DORT HWY
FLINT, MICH. 4850

NOTES:

SPECIFICATIONS shall equal or exceed those of Armco, Bethlehem, and/or American (U.S.S.).

POSTS shall be 6" x 8" timber, (6" x 6" for parking lots), 6' long (5' in lots), set approximately 4' below ground line (3' in lots). Posts to be painted same color as rails. Posts to be treated Douglas Fir.

FINISH - All metal parts, including rails, terminal sections, bolts, washers, nuts, etc., shall be galvanized. Upon completion of installation, guard rail and posts shall be given two coats of white paint conforming to Div. of Hwys. Spec. 52-G-10 (Sec. 32, Chap II, Par. J, Div of Hwys Std Specs) over one prime coat of zinc chromate primer.

PARKING METERS, when required, shall be located approximately 3" behind guard rails and along center line of back-to-back installations.

TERMINAL SECTIONS in parking lots shall be the wrap-around type. Highway installations may be either type unless otherwise noted.

⚠ GUARD RAIL POSTS in parking lots shall be set by cutting and/or digging post holes (after completion of any paving, if required), setting posts, and backfilling to grade with concrete, sloped to drain away from post.

Approved [signature] Traffic Engineer
Date 10-14-58 H. Ball

REVISIONS

DATE	MARK	BY	APPROVED
6-15-59	⚠	H. Ball	Revised to apply to STEEL guard rail only.
2-3-60		N. BALL	POST INSTALLATION.
6-23-70	⚠	E. J.	

STEEL GUARD RAIL (BEAM TYPE)

CITY OF RIVERSIDE, CALIFORNIA

TRAFFIC AND PARKING DIV., DEPT. OF PUBLIC WORKS

STANDARD DRAWING NO. 650

SIGN STANDARD

TRAFFIC CONTROL SIGNS FOR CONSTRUCTION PROJECTS

All traffic control signs shall conform to the current State of California, UNIFORM SIGN CHART. (The minimum-sized sign is allowed.)

Sign Blank: Blank material shall be made of either aluminum, steel or high density plywood.

Sign Color: All sign colors shall be reflectorized, conforming to the following requirements:

Yellow & Orange Signs: Reflective sheeting material shall be used for background color. Legend color shall be black and affixed to sheeting material either through the process of silk screening or non-reflective cut-out letters, symbols and borders.

Silver Signs: Reflective silver (white) sheeting material shall be used for background color. Legend color shall be black and affixed to background as described above for yellow signs.

Red Signs: Reflective red sheeting material shall be used for background color if reflectorized silver (white) cut-out letter and borders are utilized. Silver (white) reflective sheeting shall be used for silk screening in which the process will be reversed to produce a red background with silver (white) legend.

Black Signs: Non-reflective black background color. Legend color shall be reflective silver (white) and affixed to background either through the process of silk screening or reflective cut-out letters, numbers, symbols and borders. Non-reflective borders may be used only if sign is larger than 4' x 5' or (20 sq. ft.).

Green Signs: Non-reflective green background. Legend color shall be reflective silver (white) and affixed to background as described above for black signs.

Legend: Letters, numbers, symbols, borders, size and stroke shall conform to the State of California, Caltrans, standard sign lay-out specifications.

THE CONTRACTOR MUST OBTAIN WRITTEN APPROVAL FROM THE TRAFFIC ENGINEER PRIOR TO VARIANCES FROM THE ABOVE STANDARDS.

Revised 5/16/73
REVISED 5-6-77

Approved by [signature]
City Traffic Engineer

Date 5/18/76

CONSTRUCTION SIGNS

PARKING & TRAFFIC DIV., CITY OF RIV., CALIF

STANDARD DRWG. NO. 658

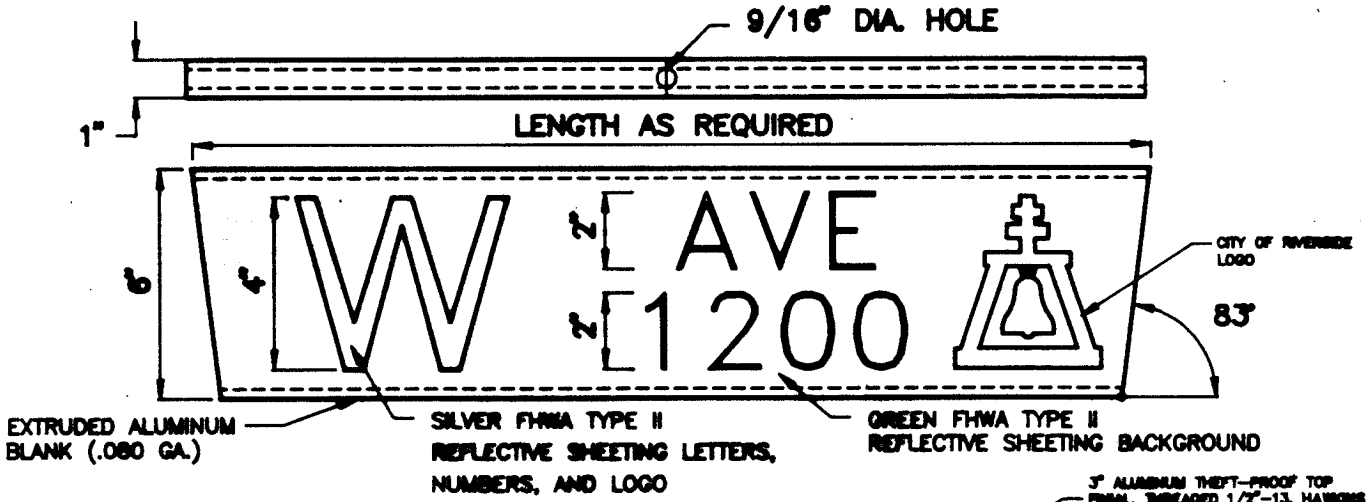

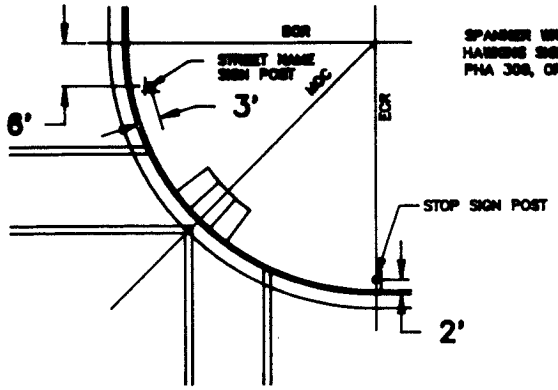

TYPICAL LOCATION OF STREET NAME AND STOP SIGNS

NO SCALE

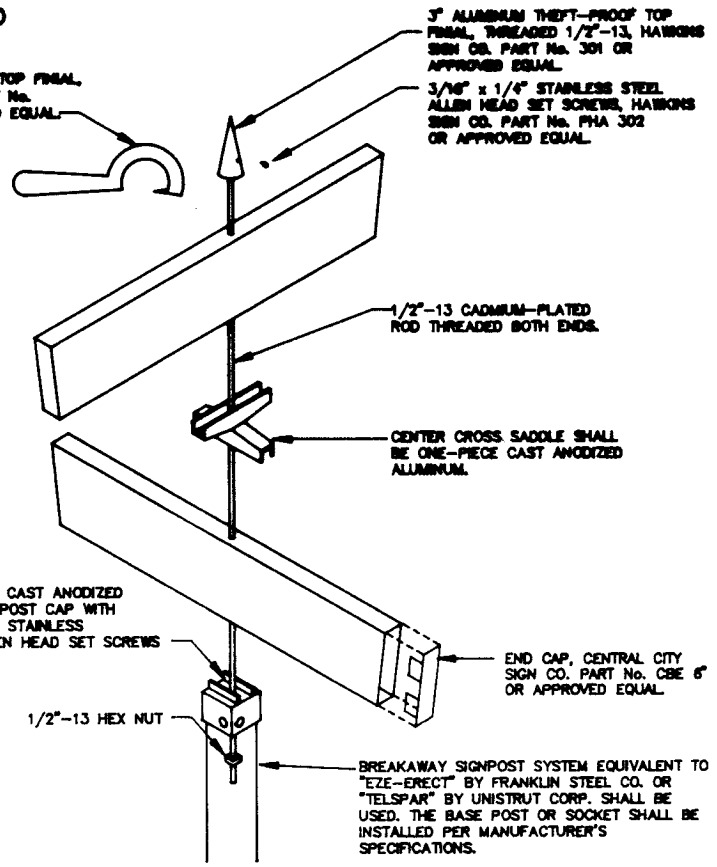

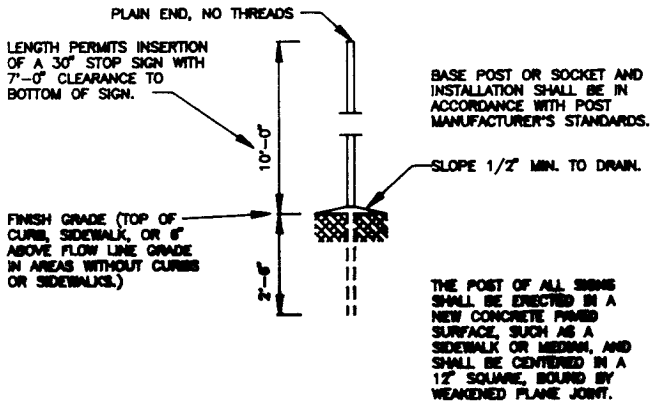

INSTALLATION DETAILS

NO SCALE

ASSEMBLY

STREET NAME SIGN ON THIS DRAWING IS FOR MINOR STREETS ONLY. FOR STREET NAME SIGN ON MAJOR STREETS SEE DRAWING NO. 662A

APPROVED Barry Bed DATE 4/17/90

PUBLIC WORKS DIRECTOR – R.C.E. 20900

MARK	REVISIONS	APPR.	DATE

CITY OF RIVERSIDE

PUBLIC WORKS DEPT. – ENGINEERING DIV.

STREET NAME SIGNS

(STYLE HA)

STANDARD DRAWING NO. 662

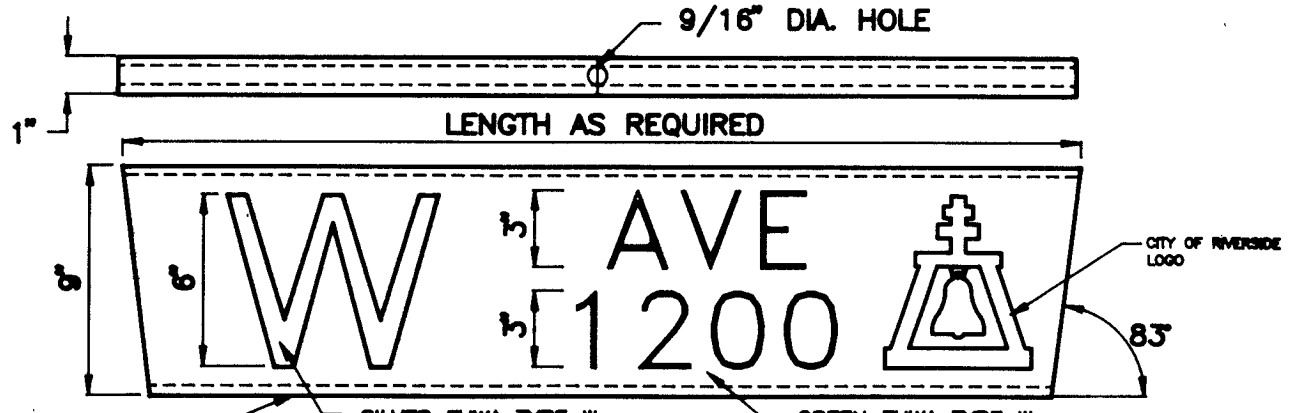

EXTRUDED ALUMINUM BLANK (.080 GA.)

SILVER FHWA TYPE III REFLECTIVE SHEETING LETTERS, NUMBERS, AND LOGO

GREEN FHWA TYPE III REFLECTIVE SHEETING BACKGROUND

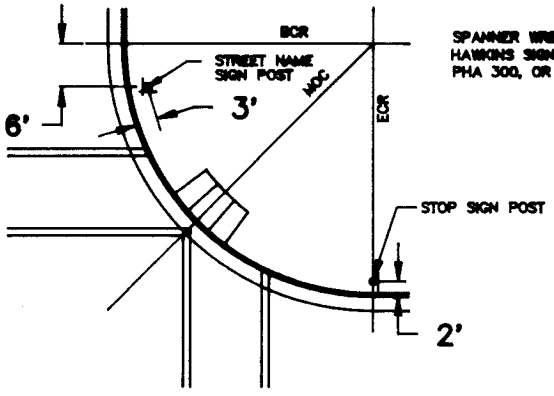

TYPICAL LOCATION OF STREET NAME AND STOP SIGNS

NO SCALE

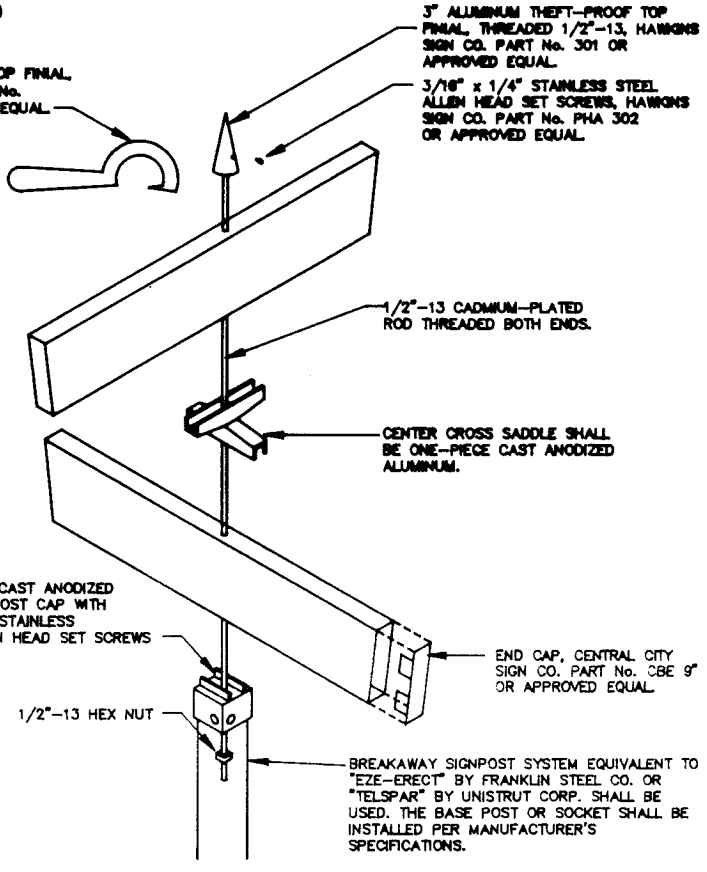

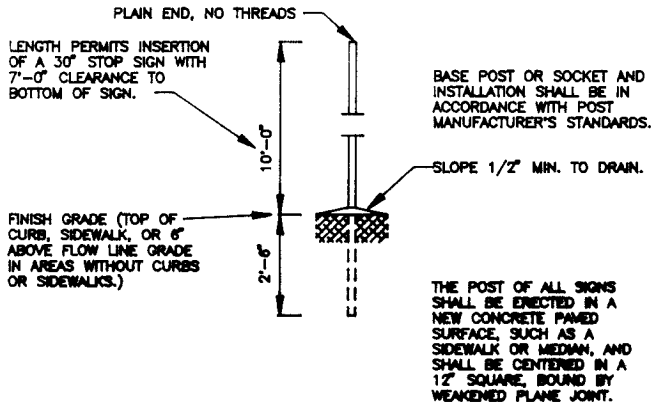

INSTALLATION DETAILS

NO SCALE

ASSEMBLY

FOR MAJOR STREETS AS SHOWN ON THE CIRCULATION ELEMENT OF THE GENERAL PLAN.

APPROVED Barry Beck DATE 4/17/90
PUBLIC WORKS DIRECTOR – R.C.E. 20900

MARK	REVISIONS	APPR.	DATE

CITY OF RIVERSIDE

PUBLIC WORKS DEPT. – ENGINEERING DIV.

STREET NAME SIGNS

(STYLE HA)

STANDARD DRAWING NO. 662A

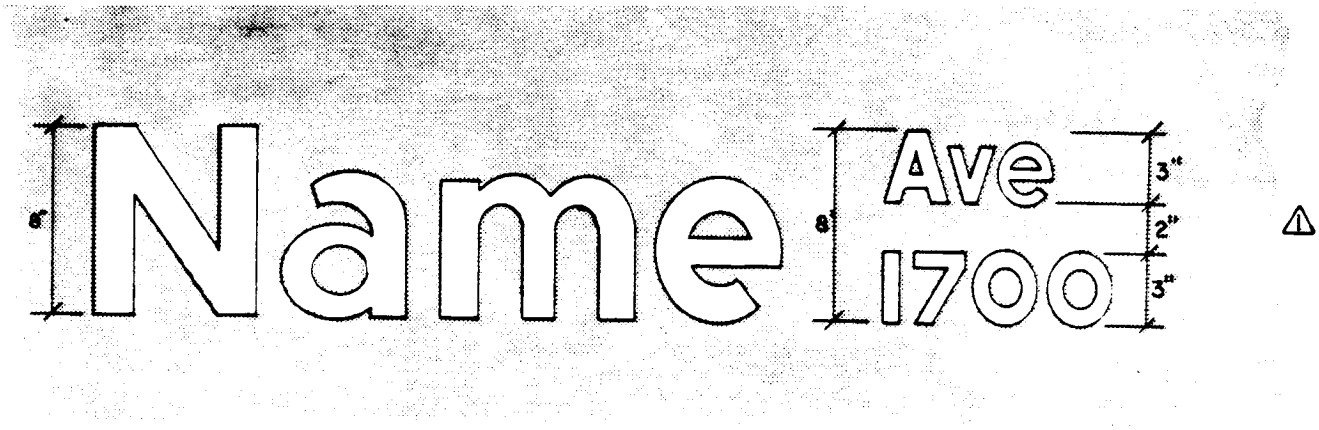

TYPICAL LEGEND LAYOUT

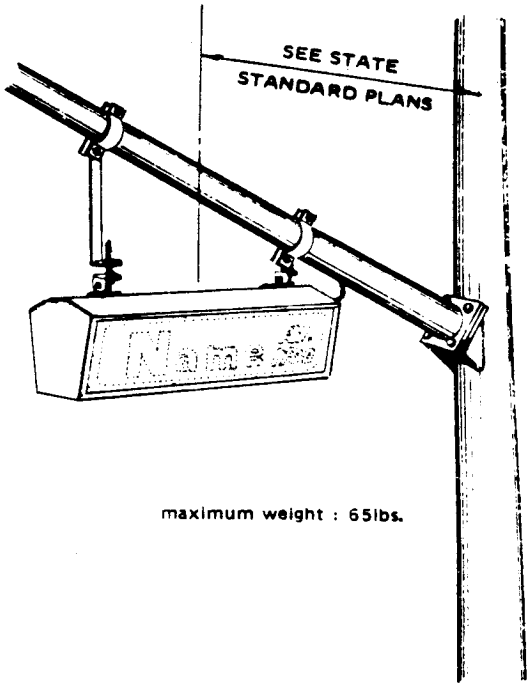

maximum weight : 65lbs.

GENERAL NOTES :

2

1. Internally illuminated street name sign shall be Type A..
2. Message shall be displayed on both sign panels unless otherwise indicated on the plans.
3. See special provisions and plans for street names and block numbers.
4. Panel color : White lettering on green background.
5. For further details see special provisions.

APPROVED Robert C. Wales DATE 6/21/78
PUBLIC WORKS DIRECTOR - R.C.E. 18793

MARK	REVISIONS	APPR.	DATE
1	ADDED DIMENSIONS	RLJ	4/8/82
2	CHANGED TO TYPE "A" SIGN	JMW	10/22/84

CITY OF RIVERSIDE

PUBLIC WORKS DEPT. - ENGINEERING DIV.

Internally Illuminated Street Name Sign

STANDARD DRAWING NO. **662B**

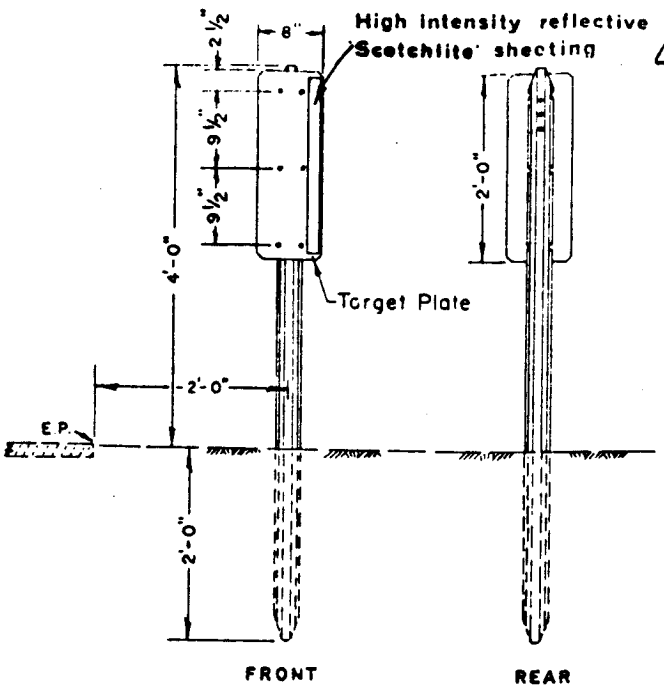

GUIDE MARKER

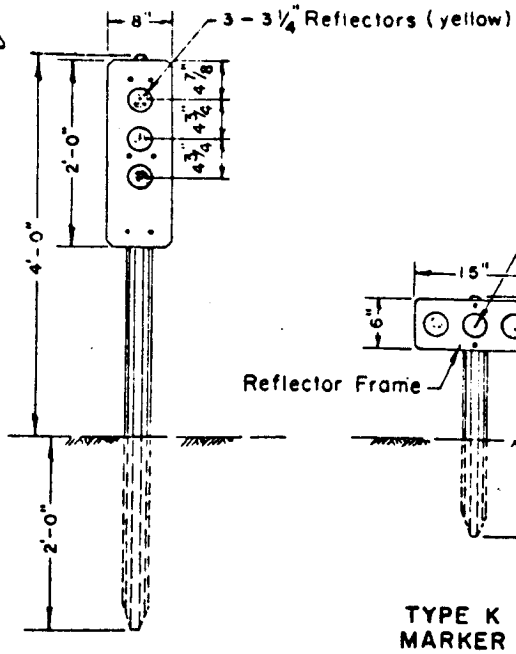

TYPE L MARKER

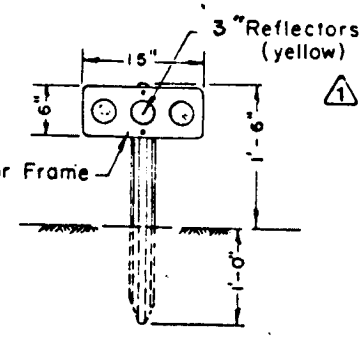

TYPE K MARKER

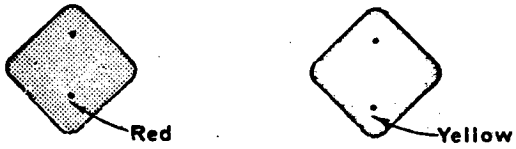

TYPE 'N' MARKER

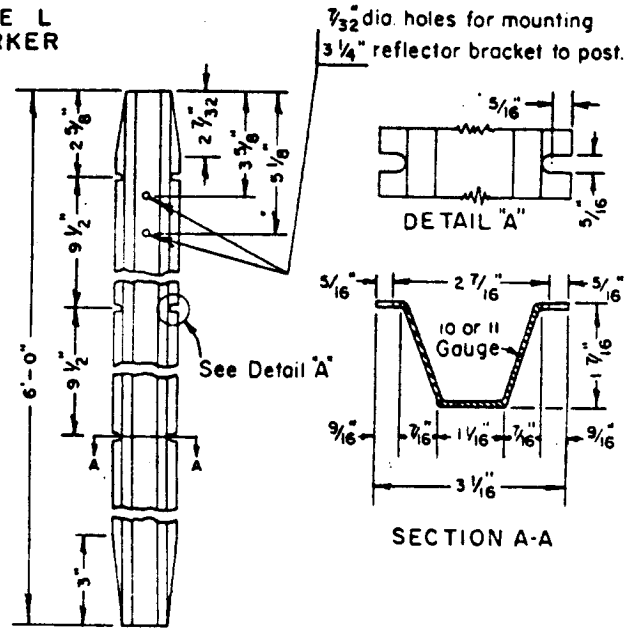

METAL MARKER POST

The Type 'N' marker shall be faced with high intensity reflective 'Scotchlite' sheeting 1
The red Type 'N' marker shall be used with the W31 (END) sign and the yellow is to be used at all other locations as shown on plans.

APPROVED [signature] DATE 6-10-76
PUBLIC WORKS DIRECTOR - R.C.E. 8134

MARK	REVISIONS	APPR.	DATE
1	deleted equivalent & changed to 3" reflectors	[illegible]	6/23/82

CITY OF RIVERSIDE
PUBLIC WORKS DEPT. - ENGINEERING DIV.

SIGNS AND MARKERS

STANDARD DRAWING NO. 665

SIDEWALK AND SHOULDER

Mounting Height and Lateral Position for Signs:

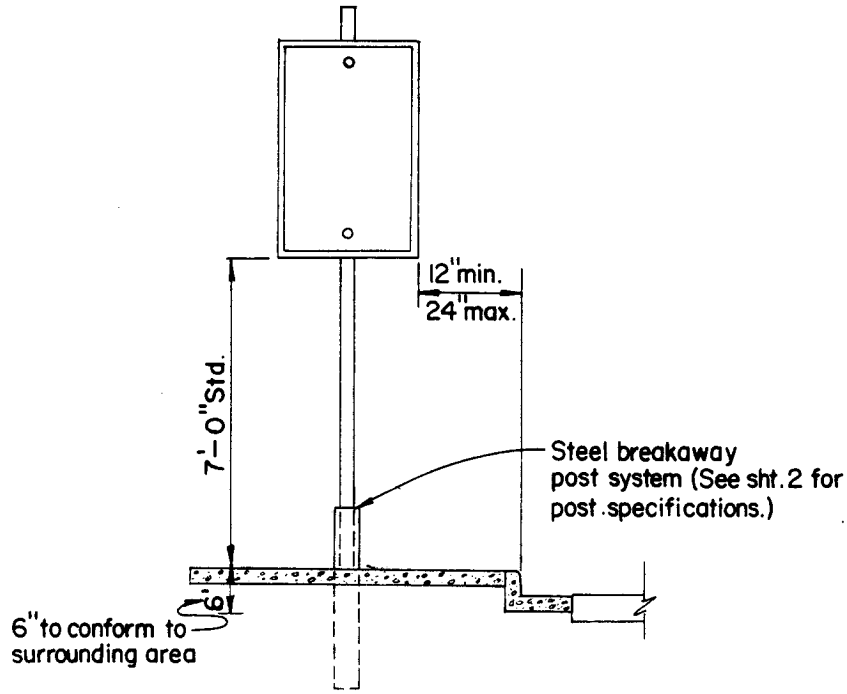

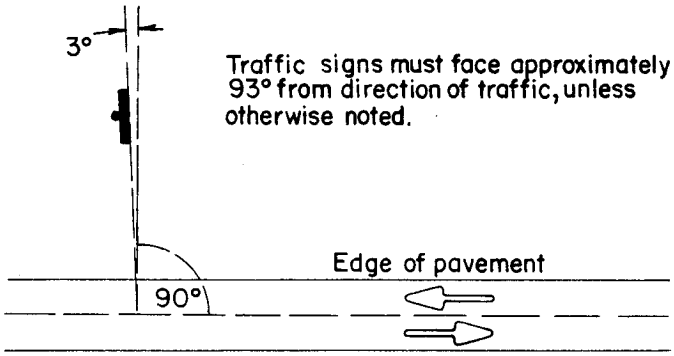

POSITION WITH RELATION TO DIRECTION OF TRAFFIC

Notes

1. Median Mountings- Posts shall be centered in median. Light or signal standard may be used to mount sign only if standard is located within 10'-0" of median nose.
2. R1's, R39's and W53's will be erected at the BCR or ECR as shown on plans. W53's may be attached to Lt. Std. within 20' of above location.
3. Any variations from standard subject to approval by the City Traffic Engineer.
4. R1's shall be 30" min. R7's shall be the symbol type and shall be 20" x 30". △1

THIS STANDARD DRAWING SUPERCEDES PREVIOUS STD. DWG. NO. 666

APPROVED [signature] DATE 10/22/84
PUBLIC WORKS DIRECTOR - R.C.E. 18793

MARK	REVISIONS	APPR.	DATE
△1	Added note.	[signature]	2-2-87

CITY OF RIVERSIDE

PUBLIC WORKS DEPT. - ENGINEERING DIV.

TRAFFIC CONTROL SIGNS

STANDARD DRAWING NO. 666

⚠ The Contractor shall furnish all traffic control signs, hardware, posts, and appurtenances to erect the signs as shown on the construction plans and or as specified. These signs shall conform to the most current UNIFORM SIGN CHART as adopted by the California Traffic Control Devices Committee and published by the State of California Department of Transportation.

Sign Blanks: Blank material shall be made of Alodine 1200 treated Aluminum, alloy 6061-T6 or 5155-H36 minimum gauge of 0.080.

Sign Background, Legend, Symbols: Reflective sheeting (Engineer Grade) material shall be used for background of signs. Legend and background color of signs shall conform to the UNIFORM SIGN CHART. Legend and/or symbol, borders shall be applied to reflective sheeting material either through the process of silk screening or cut-out letters, symbols and borders.

Size and Stroke of Legend: Letters, numbers, symbols, borders, size and stroke shall conform to the State of California Division of Highways, Standard Sign Lay-Out Specifications.

Hardware: All signs erected shall be affixed to posts with either galvanized or aluminum hardware normally available from vendors of traffic signs. The face of all signs shall be protected by placing either a fiber or neoprence washer between a metal washer next to the bolt head and the sign face. Sign back brace shall be used on any sign 36" x 36" or larger.

Post: Steel post shall be provided, if indicated on plans.
Symbols for post:

Steel post with sign

Post Specification: Breakaway signpost system equivalent to "eze-erect" by Franklin Steel Co., "POZITUBE" by Southwestern Pipe Inc., or "TELESPAR" by Unistrut Corp. shall be used. The base post or socket shall be installed according to manufacturer's specifications.

Note: The base post or socket of all signs to be erected in a new concrete paved surface, such as a sidewalk or median, shall be centered in a 12" square bound by weakened plane joint.

APPROVED [signature] DATE 10/[illegible]/84
PUBLIC WORKS DIRECTOR - R.C.E. 18793

MARK	REVISIONS	APPR.	DATE
⚠	REVISED PARAGRAPH	[signature]	2-2-87

CITY OF RIVERSIDE
PUBLIC WORKS DEPT. - ENGINEERING DIV.

TRAFFIC CONTROL SIGNS

STANDARD DRAWING NO. 666

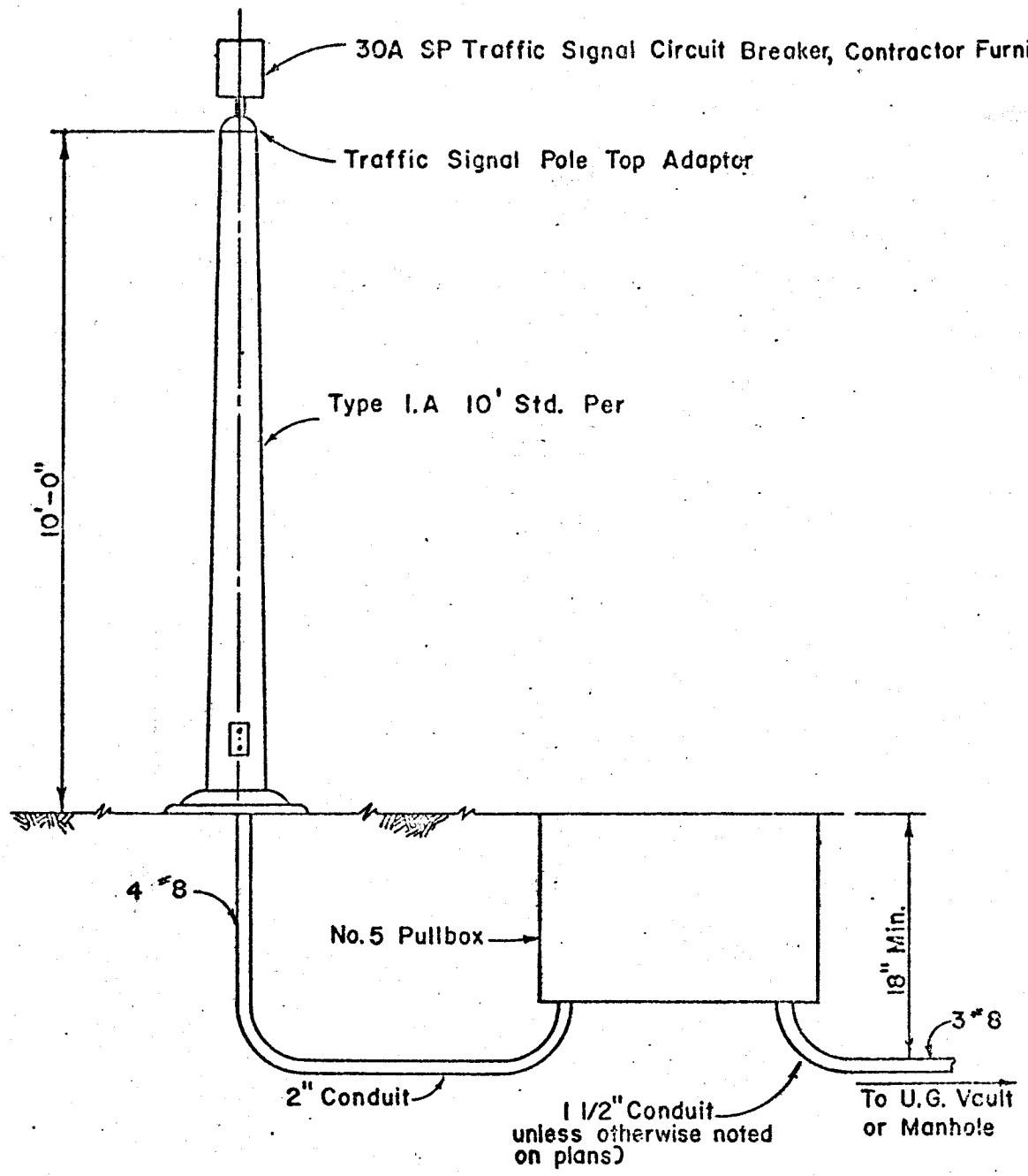

CONDUCTORS

Signal Service:

1-Black (line)
1-Red (load)
2-White
4-#8 Total

NOTE

1. Any addition or variation from standard will be so stated in the City Special Provisions under SERVICE.
2. Mark conductors in pullbox.

Approved by [signature]
City Traffic Engineer

Date [illegible]

ELECTRICAL SERVICE DETAILS
(SIGNAL ONLY)

PARKING & TRAFFIC DIV., CITY OF RIV, CALIF

STANDARD DRWG. NO. 667

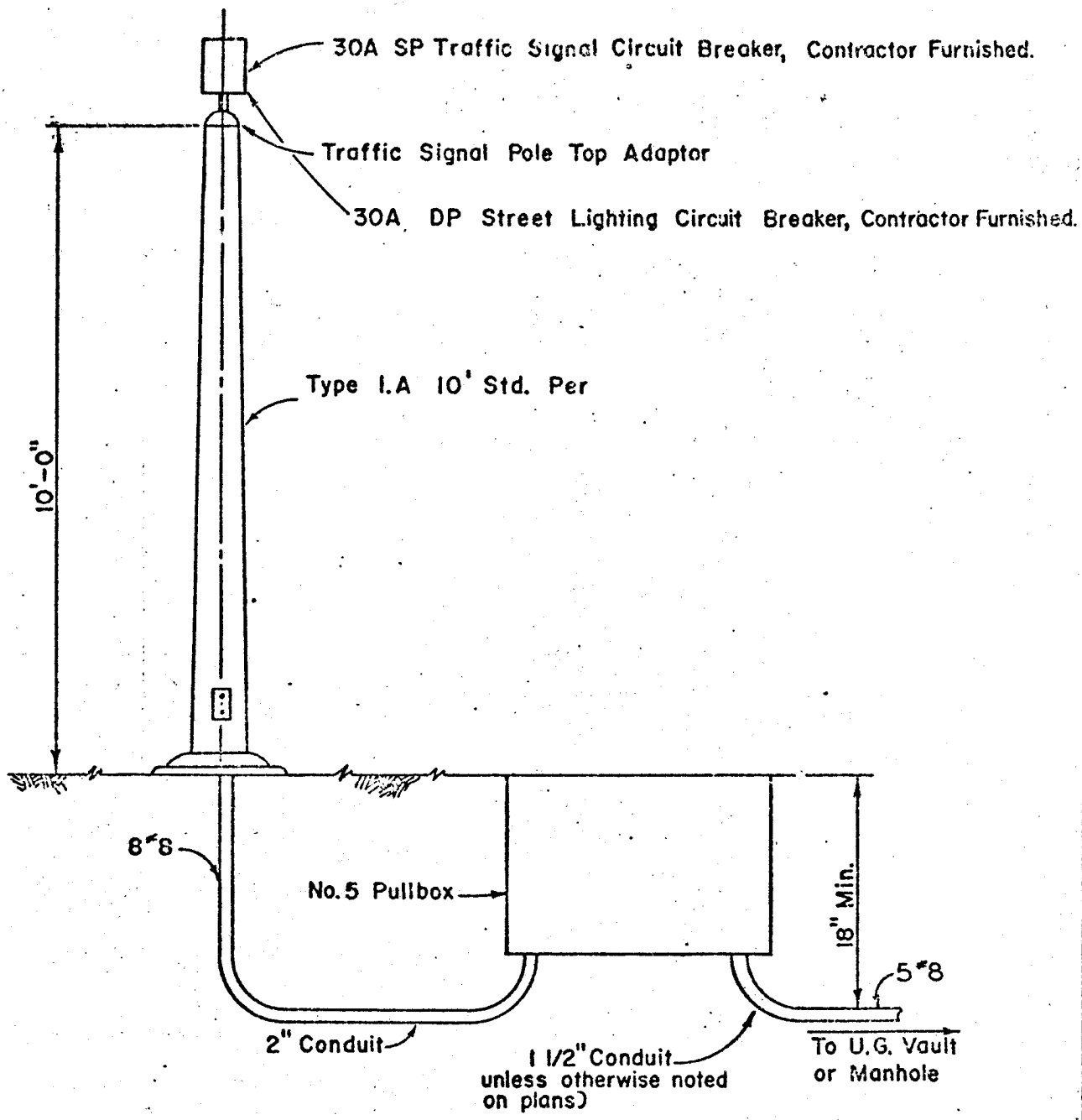

CONDUCTORS

Street Lighting Service:

2-Black (line)
2-Black (load)

Signal Service:

1-Black (line)
1-Red (load)
2-White

8-#8 Total

NOTE

1. Any addition or variation from standard will be so stated in the City Special Provisions under SERVICE.
2. Mark conductors in pullbox.

Approved by [signature]
City Traffic Engineer

Date 3/3/70 Rev. 10/10/74

ELECTRICAL SERVICE DETAILS

SIGNAL & LIGHTING

PARKING & TRAFFIC DIV., CITY OF RIV., CALIF

STANDARD DRWG. NO. 667

SHEET 2 OF 2

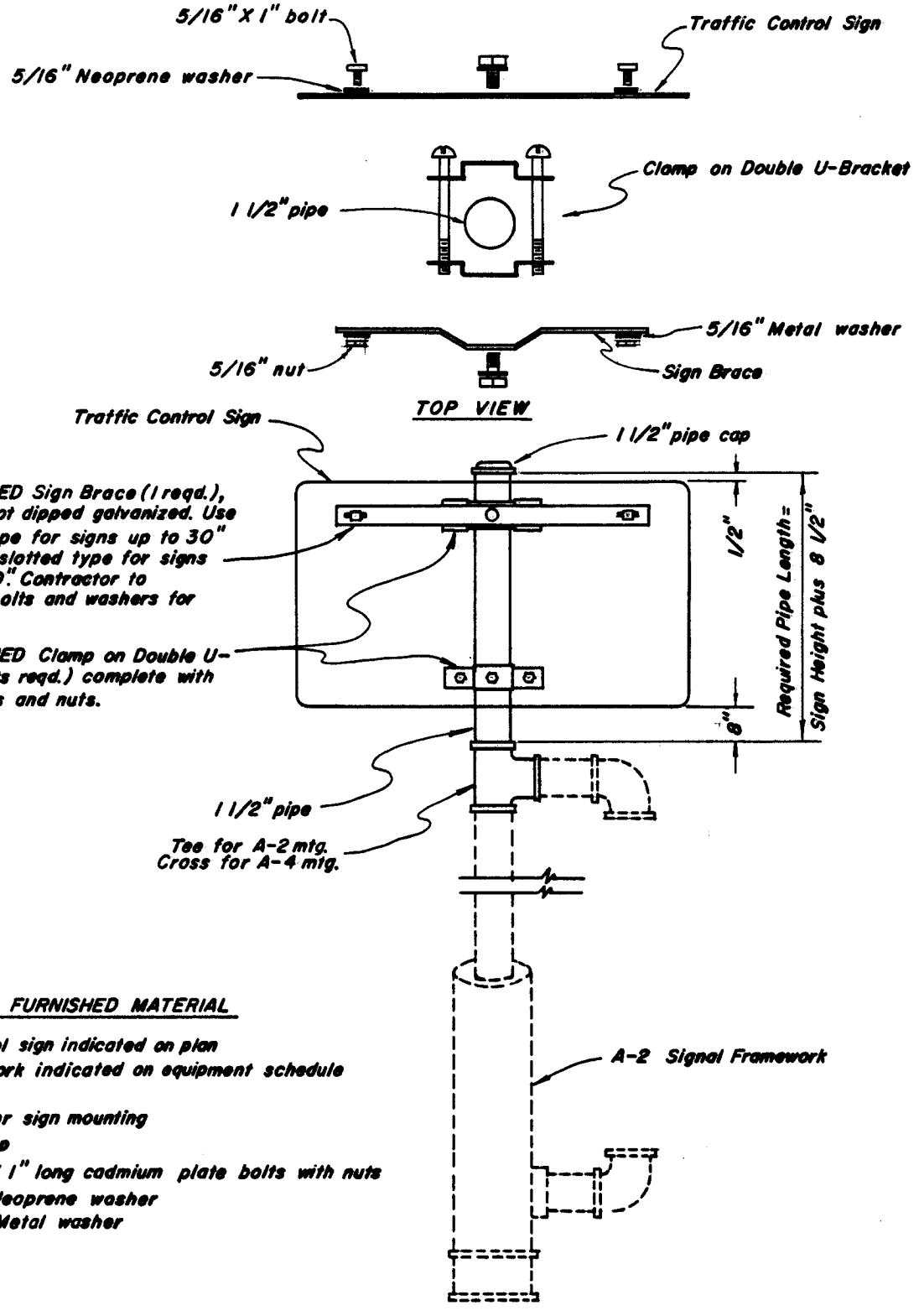

CONTRACTOR FURNISHED MATERIAL

Traffic Control sign indicated on plan
Signal framework indicated on equipment schedule
Tee or Cross
1 1/2" Pipe for sign mounting
1 1/2" Pipe cap
2 ea. – 5/16" X 1" long cadmium plate bolts with nuts
2 ea. – 5/16" Neoprene washer
2 ea. – 5/16" Metal washer

APPROVED _____ DATE 4-26-71
Director of Public Works

MARK	REVISIONS	APPR.	DATE

CITY OF RIVERSIDE
PUBLIC WORKS DEPT. TRAFFIC ENG. DIV.

SIGN MOUNTING DETAIL FOR TRAFFIC SIGNAL FRAMEWORK

STANDARD DRWG. #668

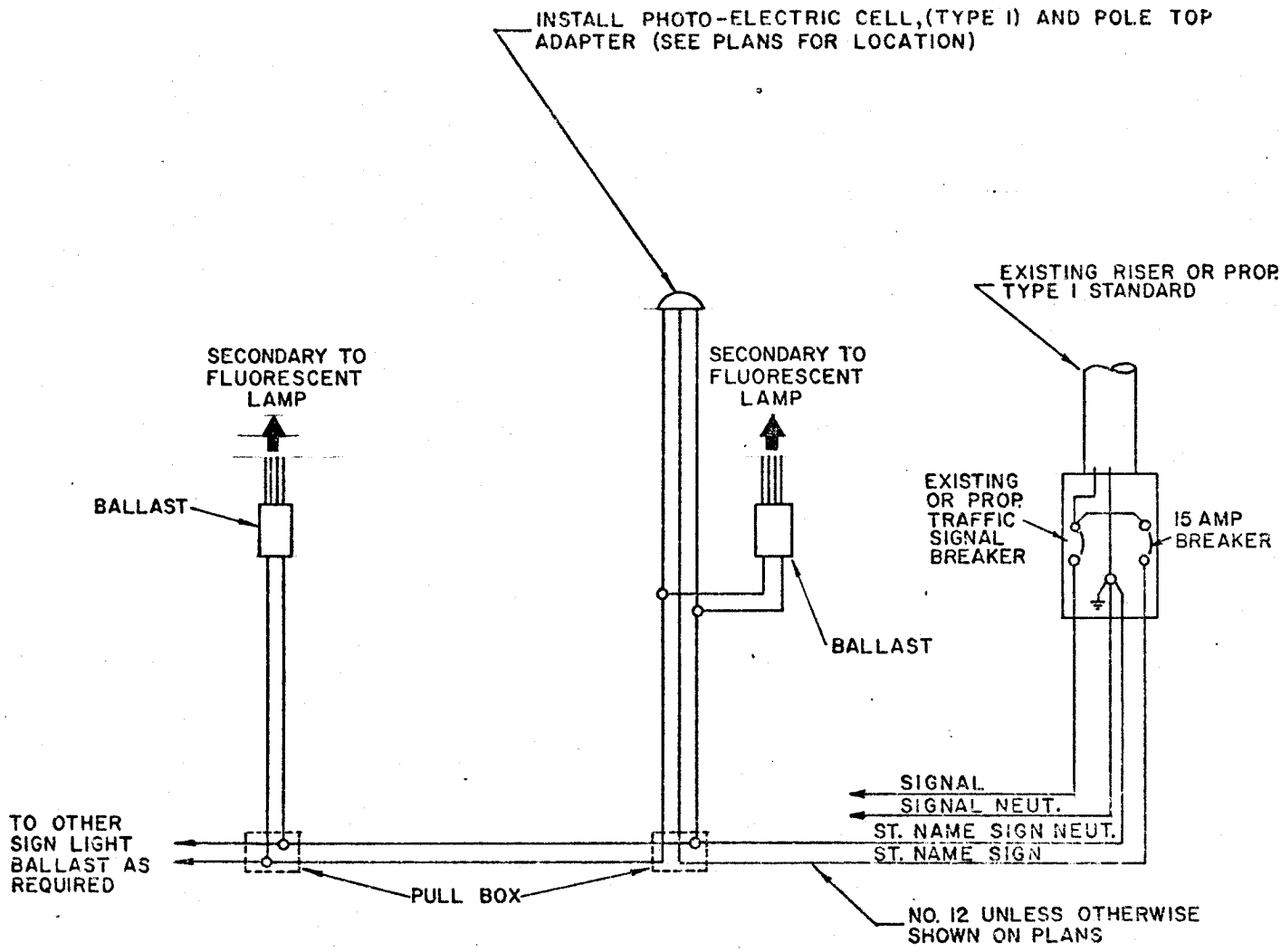

NOTE:

1. SEE SECTION 86-6.07 OF STANDARD SPECIFICATIONS FOR THE STATE OF CALIFORNIA DEPARTMENT OF TRANSPORTATION.

2. SERVICE CONDUCTORS FOR STREET LIGHTING (240V) ARE SHOWN ON THE CITY OF RIVERSIDE STD. DWG. NO. 612 OR 667 (WHICHEVER IS APPLICABLE) ALONG WITH OTHER SERVICE DETAILS.

3. ALL CIRCUIT BREAKERS, AND BREAKER BOX(ES) WILL BE CITY FURNISHED.

APPROVED Robert L Jaffe DATE 4-3-75
TRAFFIC ENGINEER

MARK	REVISIONS	APPR.	DATE

CITY OF RIVERSIDE

PUBLIC WORKS DEPT.-TRAFFIC ENG. DIV.

WIRING DIAGRAM FOR INTERNALLY ILLUMINATED STREET NAME SIGNS

STANDARD DRAWING NO. 669

TYPICAL LOCATION DETAIL
SLOPE AND DISTANCE PER UNIFORM BUILDING CODE CH. 70

NO SCALE

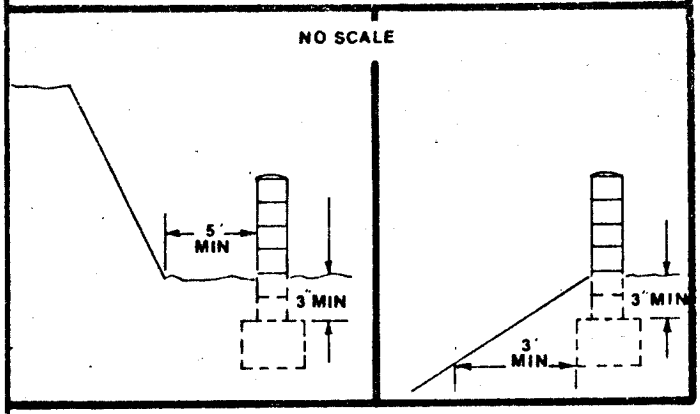

THIS WALL IS NOT TO BE USED AS A RETAINING WALL !

WALL HEIGHT	VERTICAL BAR SPACING "A"	FOOTING	
		WIDTH "W"	HEIGHT "H"
LESS THAN 3'	NO REINFORCING REQUIRED	12"	6"
3'	48"	12"	6"
4'	48"	12"	9"
5'	32"	14"	12"
6'	24" ✳	16"	12"

✳ ALTERNATE BARS CAN BE CUT OFF AT MID-HEIGHT.

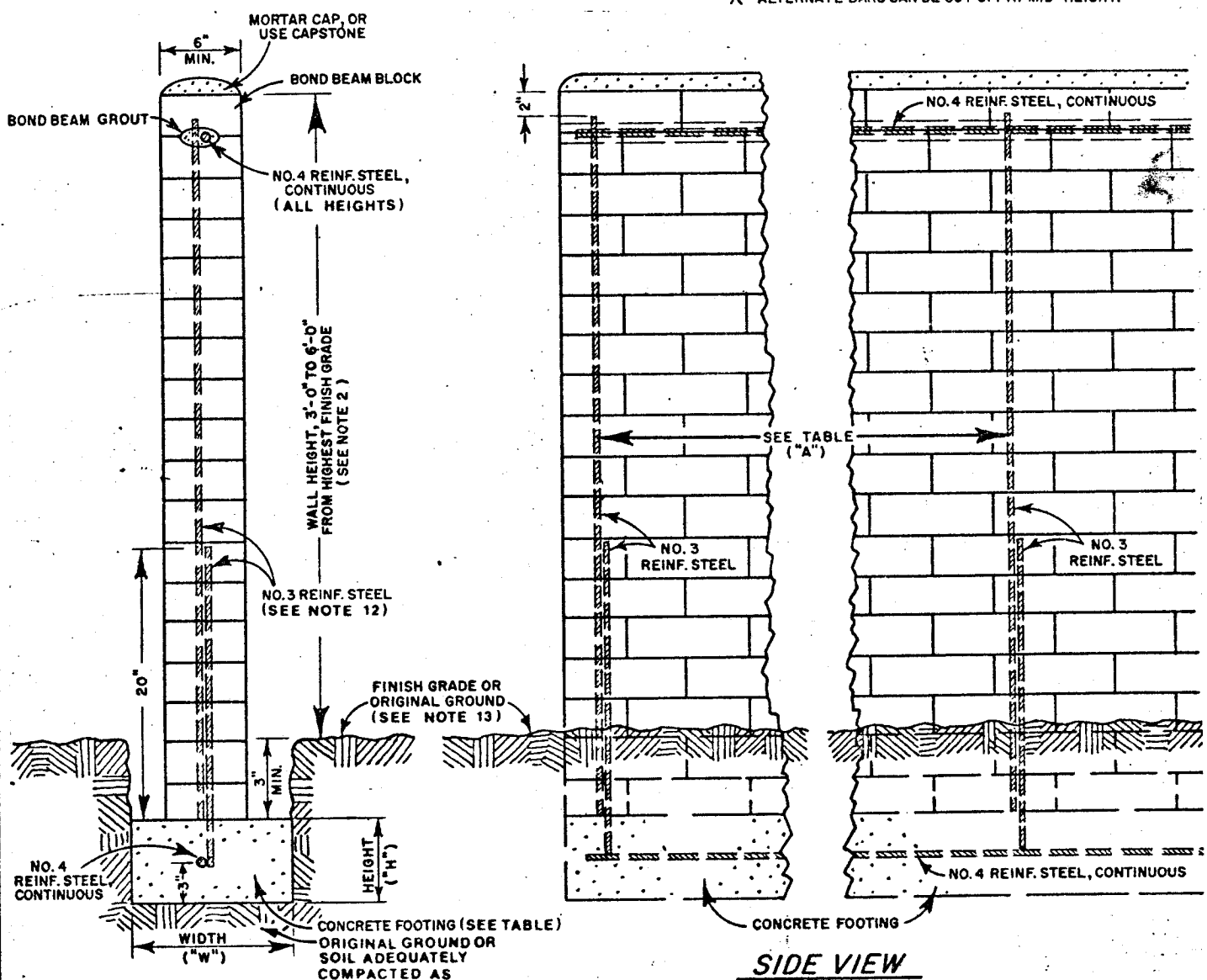

SCALE: 1" = 1'-0"

APPROVED _____ DATE _____
PUBLIC WORKS DIRECTOR - R.C.E. 18793

MARK	REVISIONS	APPR.	DATE

CITY OF RIVERSIDE

PUBLIC WORKS DEPT. - ENGINEERING DIV.

CONCRETE BLOCK WALL (FREESTANDING)

STANDARD DRAWING NO. **704**

Sheet 1 of 2

NOTES: 1. Wall height, 3'0" max. front setback area; 6'0" max. side and rear area.

2. Grout all cells containing reinforcing steel.

3. Construction shall be of the best quality workmanship and all walls shall be laid true and plumb.

4. Footing concrete shall be a 6-sack mix with a 28-day strength of 3,250 psi. Max. aggregate size 1 1/2", with 5" slump. (Green Book Concrete Class 560-C-3250)

5. Reinforcing steel shall be deformed conforming to Uniform Building Code Standards, Section 2607, A.S.T.M. Specifications A615-75, or "Green Book" Section 201-2.2.

6. Mortar joints shall be appropriate to the block, 3/8" or 1/2", 3/8" min. Mortar shall be freshly prepared and uniformly mixed in ratio one part cement, 1/4 part lime putty, 3 1/2 parts sand, and shall conform to A.S.T.M. Specs. 476-71, Uniform Building Code Sec. 2403, Type M Mortar (1976), or "Green Book" Specs. Type F Mortar, Sec. 202-2.1.2.

7. Grout shall be of fluid consistency and mixed in a ratio of one part cement, 3 parts sand; or one part cement, 2 parts sand, 2 parts pea gravel. Aggregate shall conform to A.S.T.M. Specs. C 144-70; grout shall conform to A.S.T.M. C 404-70 (1975); Uniform Building Code Section 2043, or "Green Book" Section 202.2.1.2.

8. Footing width design for walls 4' to 6' in height is based upon 2,000 lbs. sq. ft. allowable soil pressure. Footing width must be designed by a Registered Civil Engineer where required by special soil conditions.

9. Splices in horizontal reinforcing bars shall be lapped 40 diameters and wired together.

10. No. 3 reinforcing steel is 3/8" dia., No. 4 is 1/2" dia.

11. Concrete blocks for walls shown on plans to be approved by the City shall be in a style as approved by the Planning Department and conform to Grade N-1, A.S.T.M. C 90 Specs., latest edition; Uniform Building Code Section 2403; or "Green Book" Specsl, Section 202-2.1.1.

12. Two (2) bars with splice is optional; can use on (1) continuous bar for reinforcement. Bars shall be centered in cells.

13. The near bottom edge of the footing shall be 3' from the face of a fill slope. See Typical Location Detail on Sheet 1.

14. **Green Book references refer to "Standard Specifications for Public Works Construction," latest edition.**

APPROVED [signature] DATE 7/17/78
PUBLIC WORKS DIRECTOR - R.C.E. 18793

MARK	REVISIONS	APPR.	DATE
1	Removed anti-graffiti coating requirement	[initials]	10.7.83

CITY OF RIVERSIDE
PUBLIC WORKS DEPT. - ENGINEERING DIV.

CONCRETE BLOCK WALL (FREESTANDING)

STANDARD DRAWING NO. 704

Sheet 2 of 2

RETAINING WALLS

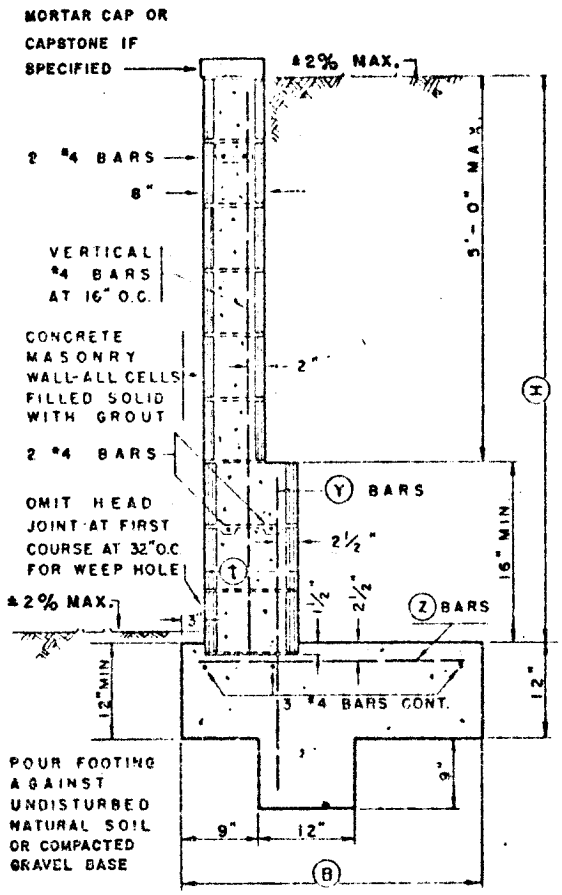

TYPICAL SECTION OVER 5'-0"

ADAPTED FROM CONCRETE MASONRY ASSOCIATION AND DEPT. OF BUILDING SAFETY COUNTY OF RIVERSIDE

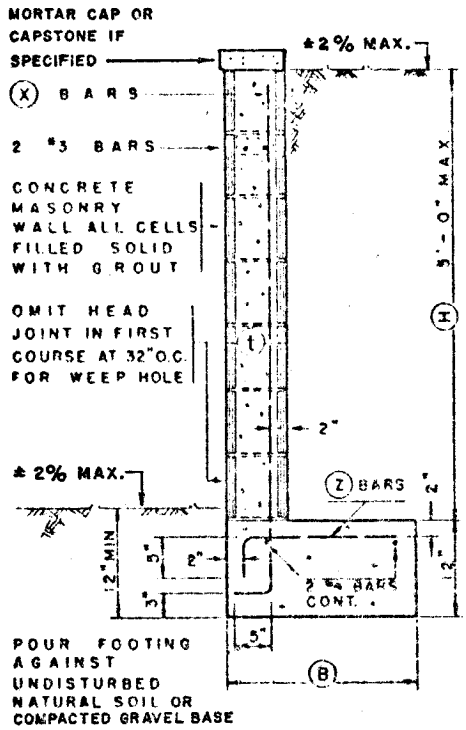

TYPICAL SECTION 5'-0" MAX.

(H)	(t)	(B)	(X) BARS	(Y) BARS	(Z) BARS
3'	6"	1'-10"	#3 AT 24" O.C	———	#3 AT 48" O.C.
4'	8"	2'-6"	#4 AT 32" O.C	———	#4 AT 48" O.C.
5'	8"	3'-0"	#4 AT 16" O.C.	———	#4 AT 32" O.C.
6'	12"	3'-8"	———	#4 AT 24" O.C	#4 AT 24" O.C.
7'	12"	4'-6"	———	#4 AT 16" O.C	#4 AT 16" O.C
8'	12"	5'-3"	———	#5 AT 16" O.C.	#5 AT 16" O.C.

MAXIMUM STRESSES

f_s = 18,000 psi

f_m = 200 psi

SHEAR V = 10 psi

BOND U = 90 psi

SOIL PRESSURE = 1800 LBS./SQ FT

CONCRETE TO SOIL COEF. FRICTION = 0.4

NOTE: ASSUMED THAT THERE IS NO SURCHARGE ON WALL
GRADE AT ±2% MAXIUM ABOVE AND BELOW WALL FOR DISTANCE EQUAL TO WALL HEIGHT
CONCRETE IN FOOTING TO TEST 2000 LBS. PER SQ. INCH AT 28 DAYS
CONCRETE BLOCK GRADE "A" UNITS A.S.T.M. C90-52
GROUT 1 PART CEMENT 3 PARTS SAND

SCALE: ½" = 1'-0"

Approved [signature] City Engineer
Date 11-14-66

Sam

REVISIONS

DATE	MARK	BY	APPROVED

RETAINING WALL

CITY OF RIVERSIDE, CALIFORNIA

DEPT. OF PUBLIC WORKS

STANDARD DRAWING NO. 707

RETAINING WALLS

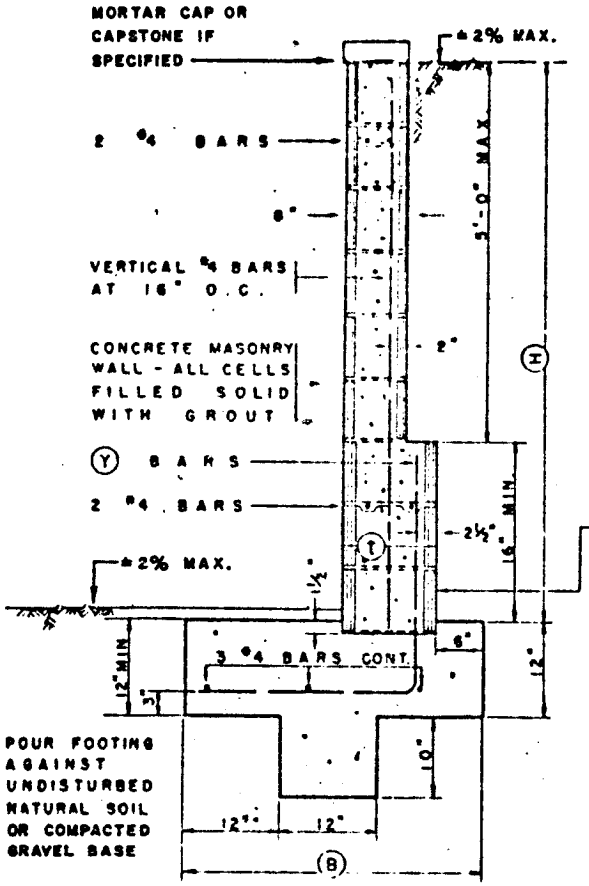

TYPICAL SECTION OVER 5'-0"

ADAPTED FROM CONCRETE MASONRY ASSOCIATION AND DEPT. OF BUILDING SAFETY COUNTY OF RIVERSIDE

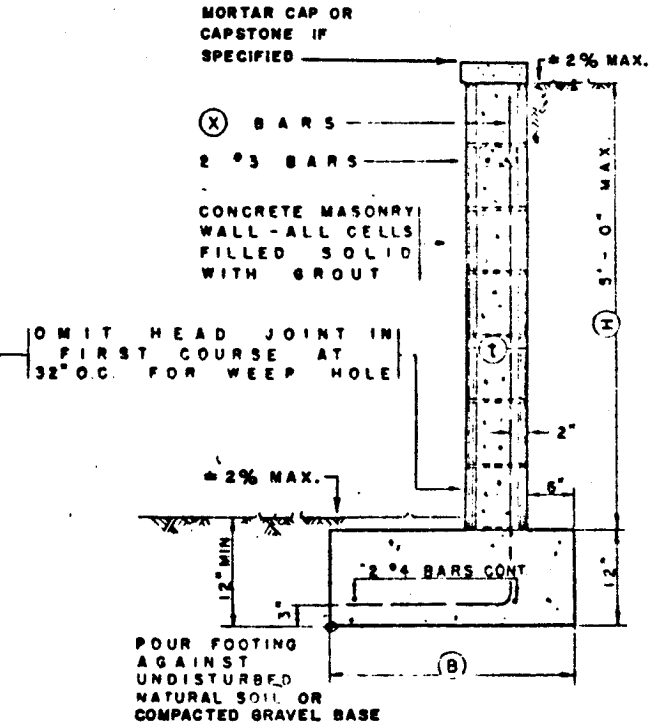

TYPICAL SECTION 5'-0" MAX.

H	t	B	X BARS	Y BARS
3'	6"	1'-9"	#3 AT 24" O.C.	———
4'	8"	2'-2"	#4 AT 32" O.C.	———
5'	8"	2'-9"	#4 AT 16" O.C.	———
6'	12"	3'-3"	———	#4 AT 24" O.C.
7'	12"	3'-10"	———	#4 AT 16" O.C.
8'	12"	4'-6"	———	#5 AT 16" O.C.

MAXIMUM STRESSES

f_s = 18,000 psi

f_m = 200 psi

SHEAR V = 10 psi

BOND U = 90 psi

SOIL PRESSURE = 1000 LBS./SQ FT.

CONCRETE TO SOIL COEF FRICTION = 0.4

NOTE: ASSUMED THAT THERE IS NO SURCHARGE ON WALL.
GRADE AT ±2% MAXIUM ABOVE AND BELOW WALL FOR DISTANCE EQUAL TO WALL HEIGHT.
CONCRETE IN FOOTING TO TEST 2000 LBS. PER SQ INCH AT 28 DAYS.
CONCRETE BLOCK GRADE "A" UNITS A.S.T.M C 90 - 52.
GROUT 1 PART CEMENT 3 PARTS SAND.

Approved [signature] City Engineer
Date 11-12-66

Sam

SCALE: ½" = 1'-0"

REVISIONS			
DATE	MARK	BY	APPROVED

RETAINING WALL

CITY OF RIVERSIDE, CALIFORNIA

DEPT. OF PUBLIC WORKS

STANDARD DRAWING NO. 708

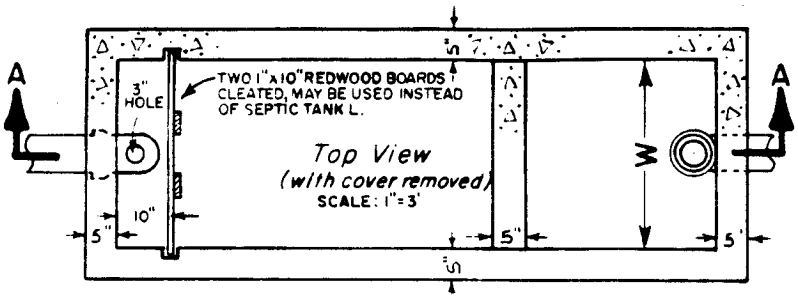

NOTES:
1 - ALL DIMENSIONS SHOWN ARE MINIMUM UNLESS OTHERWISE INDICATED.
2 - CONCRETE SHALL BE 560 D 2500
3 - BACKFILL FOR SEPTIC TANK AND DRY WELL TO BE DRY TAMPED. EXCAVATION VOIDS FOR SEEPAGE PIT TO BE BACKFILLED WITH 6 INCHES OF ¾" GRAVEL OR ROCK.
4 - SEPTIC TANK OPTIONAL CONSTRUCTION: CONCRETE BLOCK WALLS ONLY, ½" PLASTER ALL INTERIOR WALLS.
5 - THESE STRUCTURES SHALL BE IN CONFORMANCE WITH THE CURRENT EDITION OF THE "UNIFORM PLUMBING CODE."

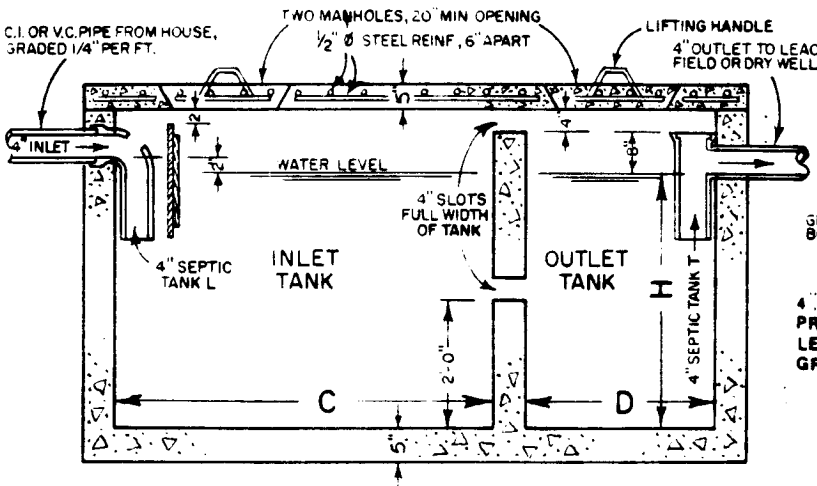

SECTION A-A
Septic Tank
SCALE: 1"=3'

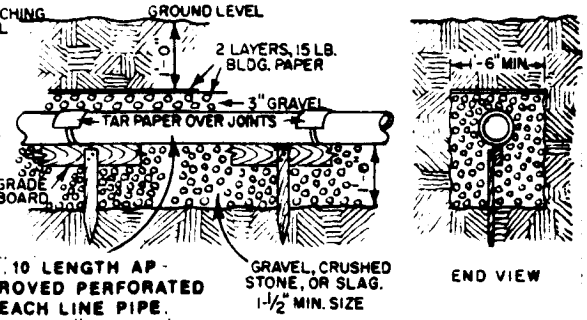

4" 10' LENGTH APPROVED PERFORATED LEACH LINE PIPE. GRADE 6" PER 100' MAX.
SECTION
Leach Line
LEACHING FIELD TO BE A MINIMUM OF 150 SQ. FT. WITH THE APPROVAL OF THE PLUMBING INSPECTOR.
(NO SCALE)

SEPTIC TANK							
Minimum Dimensions					Gallons Capacity		
NO OF PEOPLE	LENGTH "C"	LENGTH "D"	WIDTH "W"	DEPTH "H"	INLET TANK	OUTLET TANK	TOTAL CAPACITY
7 OR LESS	6'-0"	3'-0"	3'-0"	4'-0"	540	270	810
9	7'-0"	3'-8"	3'-0"	4'-0"	630	330	960
12	8'-0"	4'-0"	3'-6"	4'-0"	840	420	1260
15	9'-0"	4'-6"	4'-0"	4'-0"	1080	540	1620
50	16'-0"	8'-0"	5'-0"	5'-0"	3000	1500	4500
100	20'-0"	10'-0"	6'-0"	6'-0"	5400	2700	8100

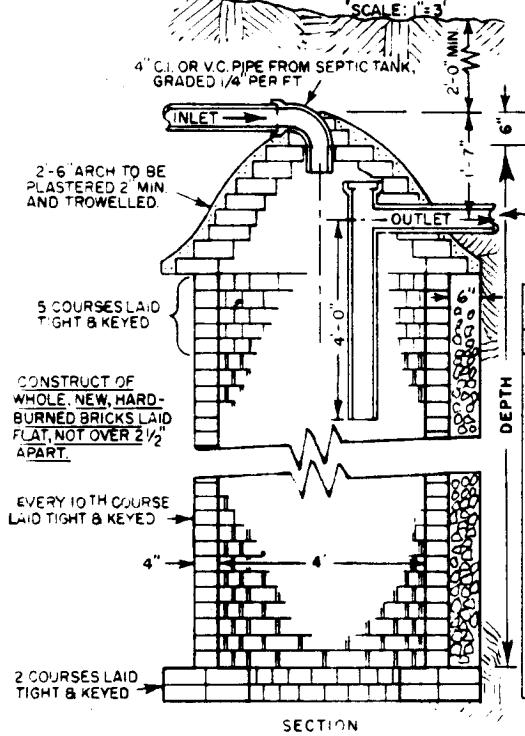

SECTION
Dry Well (Seepage Pit)
MAY BE USED IN PLACE OF LEACHING FIELD ONLY BY SPECIAL PERMIT. MUST HAVE DOUBLE THE CAPACITY OF THE SEPTIC TANK.
SCALE: 1"=3'

DRY WELL DEPTH	DIAMETER 4' MIN CAPACITY	DIAMETER 5' TYP CAPACITY GALS
15' MIN.	1410	2203
18'	1692	2644
20'	1880	2938
22'	2068	3231
24'	2256	3525
26'	2444	3819
28'	2632	4113
30'	2820	4406
32'	3008	4700
34'	3196	4994
36'	3384	5288
38'	3572	5581
40' MAX.	3760	5875

DEPTH BELOW INLET — SEEPAGE AREA CAPACITY

Required Clearances	SEPTIC TANK	LEACHING FIELD	DRY WELL
BLDGS. & STRUCTURES	5'	8'	8'
PROPERTY LINE ADJOINING PRIVATE PROPERTY	5'	5'	8' (OR 10' OTHER BLDG.)
WATER SUPPLY WELLS	50'	100'	150'
STREAMS	50'	100'	100'
LARGE TREES	10'	10'	10'
SEEPAGE PITS OR DRY WELLS	5'	5'	12'
LEACHING FIELDS	5'	4'	5'
DOMESTIC WATER LINES	5'	5'	5'

NOTE: GROUND WATER MUST BE A MINIMUM OF 10' BELOW THE BOTTOM OF A DRY WELL.

APPROVED Robert C. Wales DATE 7/14/78
PUBLIC WORKS DIRECTOR - R.C.E. 18193

MARK	REVISIONS	APPR.	DATE

CITY OF RIVERSIDE
PUBLIC WORKS DEPT. - ENGINEERING DIV.

PRIVATE (constructed in place) SEWAGE DISPOSAL STRUCTURES

STANDARD DRAWING NO. **740**

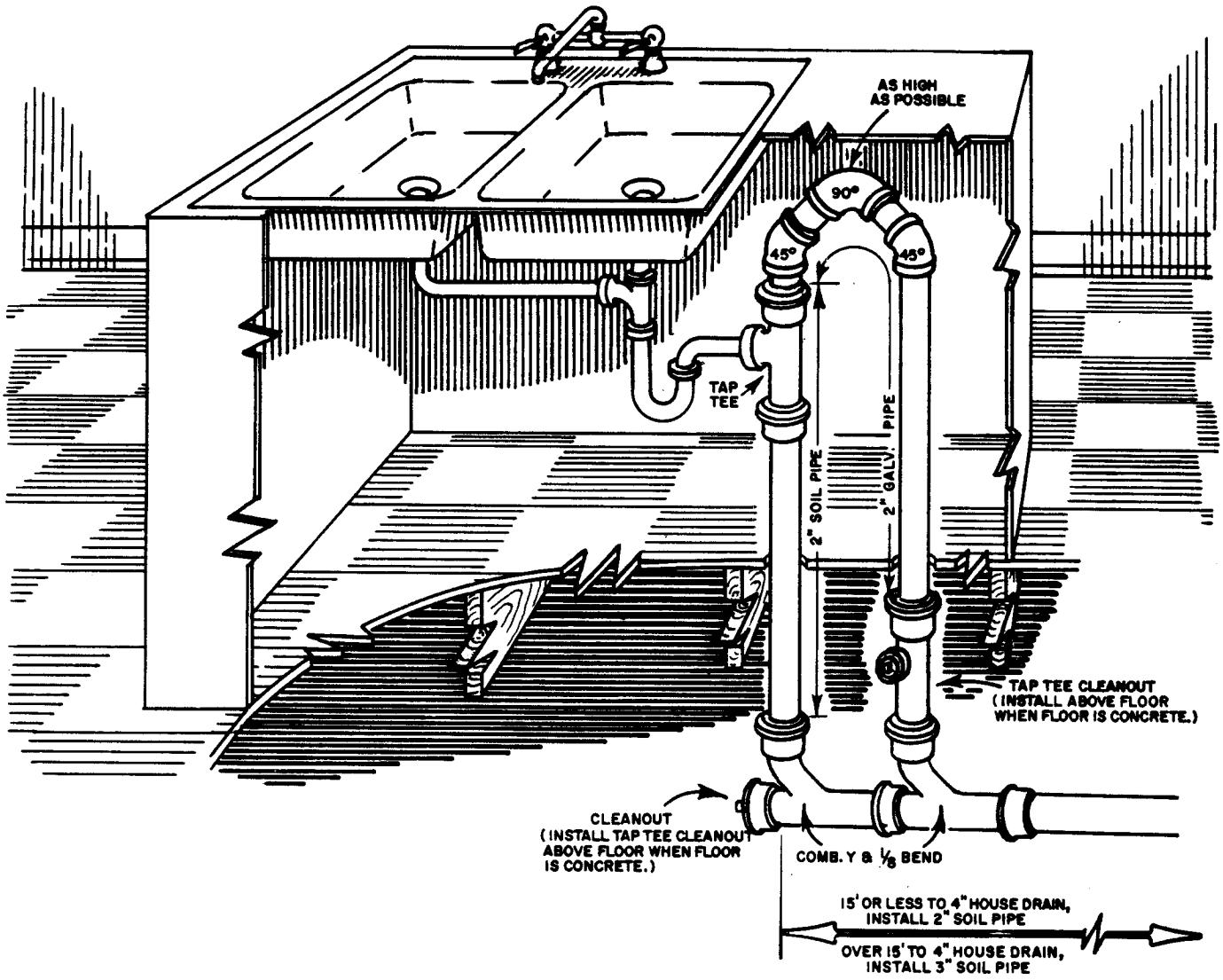

No Scale

APPROVED _____ DATE _____
PUBLIC WORKS DIRECTOR - R.C.E. 18793

MARK	REVISIONS	APPR.	DATE

CITY OF RIVERSIDE

PUBLIC WORKS DEPT. - ENGINEERING DIV.

ISLAND SINK PLUMBING DETAIL

STANDARD DRAWING NO. **742**