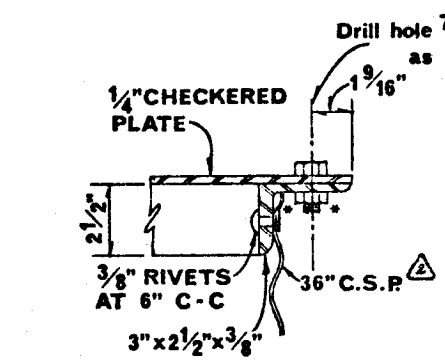

* Field Weld each nut to angle

Plate and Angle shall be galvanized

DETAIL "A"

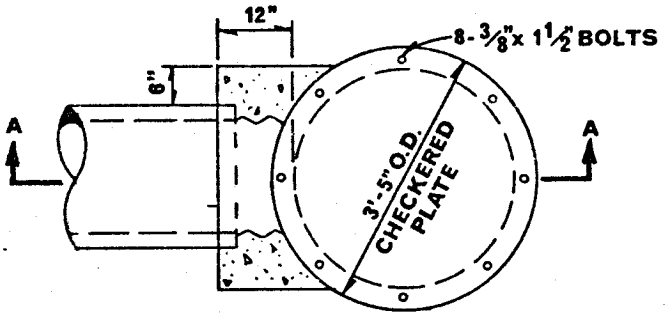

PLAN

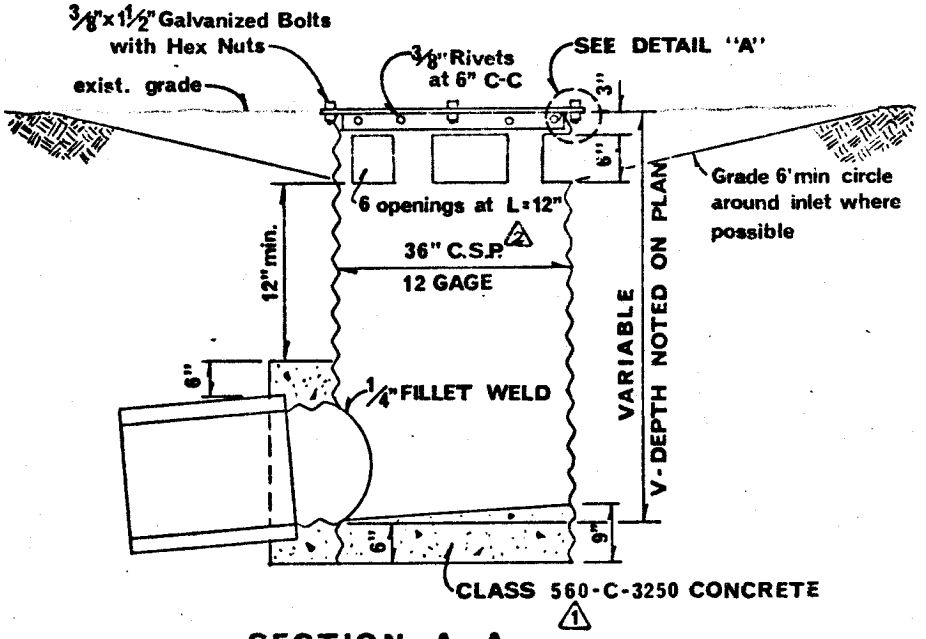

SECTION A-A

APPROVED [signature] DATE 7-24-78

PUBLIC WORKS DIRECTOR - R.C.E. 8134

MARK	REVISIONS	APPR.	DATE
1	revised concrete class	[illegible]	7-25-78
2	changed CMP to CSP	[illegible]	10-26-82

CITY OF RIVERSIDE

PUBLIC WORKS DEPT. - ENGINEERING DIV.

C.S.P. 2 INLET

STANDARD DRAWING NO. 412