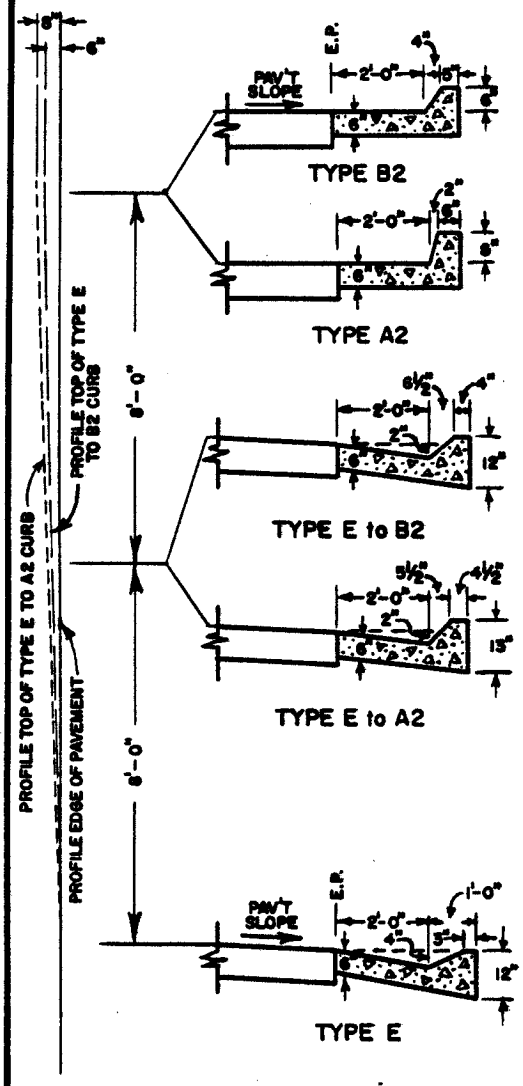

Profile & Section
FROM TYPE E TO TYPE A2 OR B2 CURB

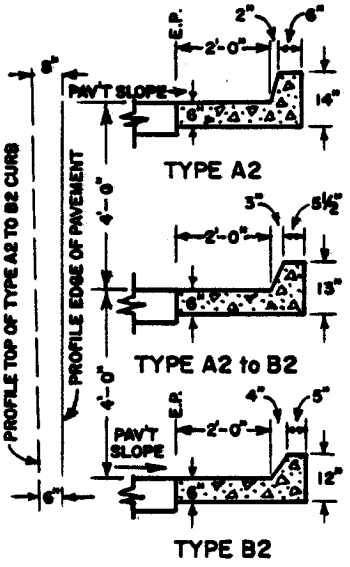

Profile & Section
FROM TYPE A2 TO TYPE B2 CURB

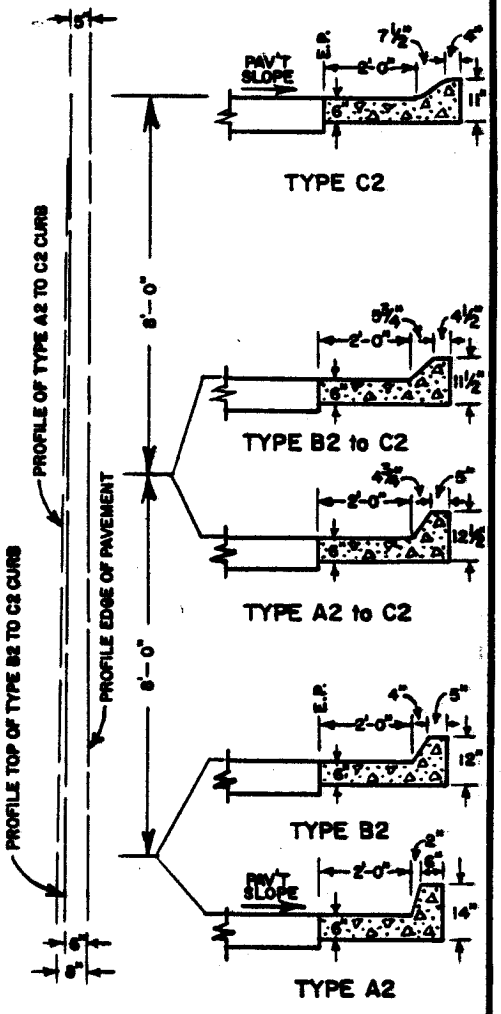

Profile & Section
FROM TYPE A2 OR B2 TO TYPE C2 CURB

No Scale

APPROVED Robert C. Weber DATE 8/3/78
PUBLIC WORKS DIRECTOR - R.C.E. 18793

MARK	REVISIONS	APPR.	DATE

CITY OF RIVERSIDE
PUBLIC WORKS DEPT. - ENGINEERING DIV.

CURB TRANSITIONS

STANDARD DRAWING NO. **210**