STANDARD DRAWINGS
FOR
CONSTRUCTION
2011

CITY OF RIVERSIDE
DEPARTMENT OF PUBLIC WORKS

May 2011

CONTENTS

PART 1 - GENERAL PROVISIONS	1-4
SECTION 1 - TERMS, DEFINITIONS, ABBREVIATIONS AND SYMBOLS	1
SECTION 2 - SCOPE AND CONTROL OF THE WORK	3
SECTION 6 - PROSECUTION, PROGRESS AND ACCEPTANCE OF THE WORK	3
SECTION 7 - RESPONSIBILITIES OF THE CONTRACTOR	4
PART 2 - CONSTRUCTION MATERIALS	6
PART 3 - CONSTRUCTION METHODS	7
BEST MANAGEMENT PRACTICES FOR TYPICAL CONSTRUCTION ACTIVITIES	15
STANDARD DRAWINGS	Attached

SUPPLEMENTAL NOTES
TO THE
CITY OF RIVERSIDE
STANDARD DRAWINGS

NO PERSON SHALL PERFORM ANY CONSTRUCTION ACTIVITY OR SHALL INSTALL ANY OBJECTS WITHIN THE PUBLIC RIGHT OF WAY OR PUBLIC EASEMENTS OF THE CITY OF RIVERSIDE WITHOUT A VALID CONSTRUCTION PERMIT OR, A STREET OPENING PERMIT OR, AN ENCROACHMENT PERMIT, ISSUED BY THE PUBLIC WORKS DEPARTMENT OF THE CITY OF RIVERSIDE.

CONSTRUCTION OF THE IMPROVEMENTS SHOWN IN THESE STANDARD DRAWINGS (EXCLUDING STANDARD DRAWING NO. 600 THROUGH NO. 699) SHALL BE IN ACCORDANCE WITH THE MOST RECENT EDITION OF THE STANDARD SPECIFICATIONS FOR PUBLIC WORKS CONSTRUCITON ("GREENBOOK"), EXCEPT FOR THE FOLLOWING MODIFICATIONS (THE MODIFICATIONS FOLLOW THE FORMAT OF THE GREENBOOK).

PART 1

GENERAL PROVISIONS

SECTION 1 --- TERMS, DEFINITIONS, ABBREVIATIONS, UNITS OF MEASURE, AND SYMBOLS

1-2 DEFINITIONS

Agency/City or State	The City of Riverside.
Base Course	The layer(s) of pavement placed between the surface course and the subgrade.
Board	The City Council of the City of Riverside.
Director	Director of Public Works for the City of Riverside.
Engineer	The Public Works Department, City Engineer or his duly authorized representative.
House Connection Sewer	Sewer lateral.

Inspector	The representative of the Engineer who is assigned to inspect conformance of the work in accordance with Plans and Specifications.
Open Graded A.C.	A thin layer of special asphalt concrete placed on a surface course or existing pavement to improve the surface conformation and friction factor. OGAC shall conform to the State Standard Specifications.
Overlay	A supplemental surface course placed on an existing pavement to improve its surface conformation or to increase its strength.
Private Engineer	(If applicable) The engineer who has prepared and has signed the Plans.
Right-of-Way	Includes City of Riverside Public Rights-of-Way and City of Riverside Public Easements.
Standard Plans	City of Riverside Standard Drawings for Construction
Surface Course	The top layer of pavement (exclusive of OGAC), designed to provide structural value and/or a surface resistant to traffic abrasion.
Traveled Way	That portion of the roadway reserved for the movement of vehicles for the general public, exclusive of shoulders and auxiliary lanes. Where traffic has been diverted or restricted to certain lanes, with the approval of the Engineer, these diversions or restricted lanes become the traveled way.

1-3 ABBREVIATIONS

Aband.	Abandonded
ARSAT	Asphalt – Rubber Stress Absorbing Treatment
DGAC	Dense Graded Asphalt Concrete
OGAC	Open Graded Asphalt Concrete
R & R	Remove and Replace

The abbreviations shown on Standard Drawing No. 2 may also apply.

1-5 SYMBOLS

The symbols shown on Standard Drawing No. 1 may also apply.

SECTION 2 --- SCOPE AND CONTROL OF THE WORK

2-3 SUBCONTRACTS

2-3.1.1 Subcontractor licenses. All Permitees shall provide a list of contractors working on their project along with their City of Riverside licenses.

2-5 PLANS AND SPECIFICATIONS

2-5.3.3.1 Shop Drawings. Shop drawings, when required, need not be reproducible. A minimum of four copies shall be submitted for approval by the Engineer.

The Contractor shall submit shop drawings for diverting sewer flows when remodeling existing structures and when connecting proposed structures to the existing sewer. The Contractor shall submit shop drawing for the Spill containment Plan as required in Section 7-8.4.1 herein.

2-11.1 City Holidays. City holidays will be observed and no work is allowed on the following days:

New Year's Day	January 1st
Martin Luther King, Jr.'s birthday	Third Monday in January
Presidents Day	Third Monday in February
Memorial Day	Last Monday in May
Independence Day	July 4th
Labor Day	First Monday in Septemer
Columbus Day	Second Monday in October
Veteran's Day	November 11th
Thanksgiving Day	Fourth Thursday in November
The day after Thanksgiving	Fourth Friday in November
Christmas Day	December 25th

If a holiday falls on a Saturday, it will be observed on the preceding Friday. If a holiday falls on a Sunday, it will be observed on the following Monday.

SECTION 6 --- PROSECUTION, PROGRESS AND ACCEPTANCE OF THE WORK

6-3 SUSPENSION OF THE WORK

6-3.3 Stage III Smog Episode. No work shall be done on a day for which a Stage III smog episode is forecast as defined by the Air Quality Management District (AQMD). The Contractor will not be entitled to any delay damages for such a suspension, but an automatic time extension will be granted. When AQMD predicts that a Stage III episode level will be reached the following day, an announcement containing the specifics will generally be provided by 2 p.m. on the day the prediction is made.

SECTION 7 -- RESPONSIBILITIES OF THE CONTRACTOR

7-8 PROJECT SITE MAINTENANCE

7-8.4.4 Site Cleanliness. The contractor shall be responsible to maintain a graffiti free work zone. This includes but is not limited to structures, appurtenances, equipment and signage. The clean-up and/or abatement shall be performed on a daily basis.

7-8.5.3.1 Sewage Spill Containment Plan. Chapter 14.12.295 of the Riverside Municipal Code prohibits the discharge of any pollutant to a storm drain or any surface, pipe, or waterway leading to a storm drain. The Contractor shall prepare and submit to the Engineer for review a sewage spill containment plan. No work will be permitted on the existing sewer system until the Engineer's review is completed. A copy of the plan shall be kept on the project site during construction. This plan shall describe the methods to be used to prevent or contain sewage spills. At a minimum the plan shall provide:

- A scaled drawing showing any proposed emergency containment area(s) and the methods to use to construct them. This plan shall also show any storm drain inlets that could be affected by an accidental spill and methods to be used to prevent the inlets from accepting any sewage. In addition, show the controls to be used to limit access to the spill area by the public.

- Describe the methods to be used for removing sewage and cleaning of storm drain inlets, storm drains, canals, and arroyos. This description shall include methods for solids removal.

- Describe cleanup methods including disinfecting the spill area. These methods shall show how disinfecting materials will be prevented from entering storm drains, canals, and arroyos.

- A scaled drawing(s) showing any proposed sewage by-pass pipes. This drawing shall indicate any sewer manholes proposed to be plugged and the day and time of day this operation will occur.

- The size and material of any by-pass pipes.

- The methods to be used to connect the by-pass pipe(s) to the existing sewer system.

- If pumping is proposed, describe the number and capacity of the pumps. Each pump, at a minimum, must be capable of passing a 3-inch diameter solid.

  - If storage is proposed, provide the methods to be used for the sewage storage and removal from the site. If a truck with a storage tank is to be used provide the capacity of the tank. If a water truck is proposed for this purpose it must be dedicated only for this operation.

In the event of a spill the Contractor shall contact the Engineer and the Field Maintenance Technician at cell 951-906-9066 (If not available contact the Wastewater Treatment Plant at 951-351-6280). The Contractor shall document the spill by photographing its extent. These photographs shall be submitted to the City for inclusion in the Spill Report.

7-8.6 Water Pollution Control.

7-8.6.1.1 General Requirements. For projects under one acre, the Contractor must follow and implement the Best Management Practices (BMPs) required by the attachment to these Supplemental Notes titled "Best Management Practices for Typical Construction Activities".

Contractor shall provide copies of certification that the superintendent or foreman has attended a Storm Water Pollution course within the last 12 months. Any work requiring the placement of BMP's shall not begin until this certification is provided to the Engineer.

7-10.1.1 Traffic and Access. No work will be allowed in the downtown Riverside area between the dates November 1 and January 3. The downtown area will be bounded by First St and Fifteenth St going north and south and the 91 Freeway and Brockton Ave going east to west. No work will be allowed within 1000' of the Galleria at Tyler or the Riverside Plaza during the same time. Any exceptions must be approved by the City Engineer

7-10.4.2.2 Use of Explosives. If explosives are to be used, the Contractor, in addition to meeting the other requirements of this Section of the Standard Specifications, shall obtain a blasting permit from the City of Riverside Fire Department and pay the required fees (the exact amount of the fee can be obtained from the Fire Department, at (951) 826-5455) and shall give four-days notice to the Engineer and the Fire Department prior to any blasting.

END OF PART 1.

PART 2
CONSTRUCTION MATERIALS

201-1 PORTLAND CEMENT CONCRETE

201-1.4.4 Hand Mixing. Hand mixing shall not be allowed.

203-6 ASPHALT CONCRETE

203-6.10 Asphalt Types for Various Uses. The materials listed below shall be used unless otherwise specified.

Blast furnace or steel slag is not acceptable as an aggregate in asphalt concrete.

TYPE	USE
B PG-64-10	Base course for streets.
C2 PG-64-10	Base course for alleys and trench resurfacing; Base course for streets with grades over 10%; Surface course for streets alleys and trenches.
D2 PG-64-10	Berm
E PG-64-10	Hand raking in inaccessible areas and feather-edging.
D2 PG-64-10	Overlay less than 1” thick

203-11 ASPHALT RUBBER HOT MIX (ARHM) WET PROCESS

203-11.2.3 Crumb Rubber Modifier (CRM). The Contractor shall certify that all crumb rubber used in the project is derived from California used and waste tires.

203-11.3 Composition and Grading. The Contractor shall use ARHM-GG-C.

207 PIPE

207-8.1.1 Alternative Pipe for Sanitary Sewers. As an alternative to the vitrified clay pipe (VCP) specified on the plans, contractors may use, at their option, any plastic pipe described and specified in the Standard Specifications for Public Works Construction, except that plastic pipe shall be limited to use in areas that are predominantly residential and to sizes not exceeding 15 inches in diameter. All vitrified clay pipes are required to have Type ‘G’ joints.

END OF PART 2.

PART 3
CONSTRUCTION METHODS

300-1.3 REMOVAL AND DISPOSAL OF MATERIALS.

300-1.3.1 General. The Contractor is responsible for the proper disposal of any construction debris and any surplus excavation material.

300-1.3.2 Requirements.

(b) Concrete Pavement. Add the following sentence to this section: "When trenching in concrete pavement, the concrete pavement shall be removed on each side of the trench by one additional foot."

(c) Concrete Curbs, Walks, Gutters, Cross gutters, Driveways and Alley Intersections.

1. **Curb or Curb and Gutter.** Curb or cub and gutter section to be replaced shall be not less than 5 feet in length. All saw cuts will be at right angles to the alignment of the curb or curb and gutter. Where curb or curb and gutter are on a curve, the saw cut will be on a radial line. If the saw cut would fall within one foot of a construction join, expansion joint, weakened plane joint, or score mark, the cut shall be made on the joint or mark. The curb or curb and gutter shall not be cut in a place that would leave a piece less than 5 feet in length. Historical removals are not allowed unless directed by the Public Works Director.
2. **Sidewalks.** No section of sidewalk to be replaced shall be less than 25 square feet in size. The length of sidewalk to be replaced shall be equal to the width. Where the sidewalk exceeds 8 feet in width, the minimum length shall be 4 feet. The exception to the above is when a section of sidewalk is removed for the installation of anything that requires a concrete foundation or a fire hydrant. The size of this section shall not exceed one-half the width of the sidewalk and shall be square. When the alignment of the sidewalk is on a curve, the saw cut shall be on a radial line; if the saw cut would fall within one foot of a construction joint, expansion joint, weakened plain joint, or score mark, the cut shall be made on the joint or mark. The sidewalk shall not be cut in a place that would leave a piece of sidewalk less than 25 square feet in size.
3. **Driveway Approaches.** Driveway approaches only be saw cut at right angles to the curb alignment or on a radial line where the curb alignment is on a curve. The minimum length of section to be replaced or section that will remain shall be one-half of the difference between dimensions "A" and "B" plus 5 feet. This length shall be measured the same as "B" dimension. The curb and gutter shall be cut and replaced as curb and gutter on all types of driveway approaches with the minimum length of one-half the "B" dimension.
4. **Cross Gutters / Spandrels.** Cross gutters shall only be saw cut at right angles to the cross gutter and shall extend the full width of the cross gutter. The section to be removed

or the section to remain in place shall not be less than 10 linear feet in length.

The saw cutting of the spandrel will be as directed in the field or as shown on the plans.

301-1 SUBGRADE PREPARATION

301-1.6.1 Schedule and Tolerances of Manhole Adjustment. Sewer and storm drain manhole frames and covers shall be raised to the finished grade by the Contractor within 48 hours of final paving. The Contractor shall raise the tops of all frames and covers to range from flush to 1/4" above the finished grade of the immediately adjacent pavement. All manhole frames and covers adjusted to grade by Contractor shall be cleaned.

301-1.6.2 Public Utilities Department (PUD) – Water Manholes and Valve Boxes. At the option of the City, the Contractor shall adjust water manhole frames and covers and water gate valve covers to range from flush to 1/4" above the finished grade of the adjacent pavement. All dirt and debris are to be removed from the valve box to a depth of 6" below the operating nut.

Adjustment of water gate valve covers installed after March 1983 (cap & liner) shall be in accordance with STD. DWG. C.W.D. – 515. On water gate valve covers installed prior to march 1983 (frame & lid type); if the frame skirt is raised above the existing gate box material (steel pipe), the gate box material should be extended as required. This extension must match the existing steel pipe O.D. & I.D. and must be secured with at least (3) equally spaced one inch welds OR the Contractor may choose to replace the Frame & Lid with a contractor supplied Cap & Liner. If a Cap & Liner is used, the Contractor must drill a 1/4" hole in the new cap, 3/8" inside the interior ring on the cap surface. A Contractor supplied 1/4" x 1-1/2" brass roundhead screw must be installed and the existing gate tap (with copper wire) inserted on the inside of the cap, then held on with a 1/4" brass washer and nut. The top of all water valve covers shall be painted in accordance with Public Utilities Water Division Sepcification No. 205.

Marking Paint – Lead Free
Aervoe Pacific - #203 Blue
Ground Traffic Coating – VOC<66%

Valve boxes smaller than (8) inches in diameter shall be replaced with 8" gate box material and a "cap & liner" type gate valve cover, in accordance with Public Utilities Water Division Specification No. 205. Any valve box found to be corroded, bent or otherwise previously damaged, making adjustment impractical or not feasible, shall be replaced. The inspector shall determine at the time of construction if the valve boxes in question shall be adjusted or replaced. The City will provide new gate box materials and "caps and liners" for the valve box replacements. Arrangements for obtaining these materials from the City's Corporation Yard at 8095 Lincoln Avenue shall be made through the Inspector one month prior to scheduled installation.

Two foot by two foot rectangular valve covers marked "Riverside Water Company" will be adjusted to grade by City.

301-1.6.3 Public Utilities Department – Electric Vaults and Manholes. At the option of the

City, the Contractor shall adjust electric manhole vault frames and equipment covers to the top ranges from flush to 1/4 inch above the finished grade of the adjacent pavement. Al electric manhole and equipment covers adjusted to grade by the Contractor shall be cleaned. Adjustments shall be in accordance with Public Utilities Department Electric Division Drawings UGS-053, UGS-062, UGS-435, and UGS-541. All work shall be accomplished in the presence of the Electric Operations representative. The Contractor shall notify the Electric Superintendent of the City Electric Division at (951) 351-6373, two working days in advance for scheduling of the representative.

Public Utilities Department electric facilities shall be designated as follows:

Manholes use Drawings UGS-062 and UGS-435
Vaults use Drawings UGS-053 and UGS-541

Since electric manholes and vaults contain energized cable and equipment, the Contractor shall use workers that have been properly trained in applicable electrical safety and work procedures to make the manhole and vault adjustments.

Except for the gate box and valve box materials as noted. The Contractor shall provide all the necessary tools, equipment, and materials necessary to perform all awarded adjustments.

301-1.8 Traffic signal Pullbox Adjustments. Adjustment of traffic signal pullboxes to grade will be subject to the following requirements:

1. The Contractor shall grout the bottom of existing pullboxes that are the remain in place and that are not already grouted with material specified in Section 86-2.06 of the State Standard Specification. The Contractor shall remove all grout that does not meet the specifications of Section 86-2.06 of the State Standard Specifications and the Contractor shall excavate within the pullbox to proper depth prior to grouting.

2. The Contractor shall adjust all conduits as necessary so the conductors do not touch the pull box lid. In addition, a minimum clearance of 3" between the top of all conduits and the bottom of the traffic pullbox lid shall be maintained; and,

3. The Contractor shall replace "in-kind" any traffic pullbox damaged as a result of his operations except that the minimum size replacement will be a No. 6 pullbox as described on State Standard Plan ES-8. Plastic Type No. 6 pullboxes will not be permitted.

302-5 ASPHALT CONCRETE PAVEMENT

302-5.5.1 Distribution and Spreading. On streets widening projects, if the width of asphaltic concrete to be placed is 8 foot or less and/or the project length is not more than 150 feet, the Contractor, with the approval of the Engineer, may use a spreader box.

Contractor shall not start paving operations after 3:00 p.m. without permission from the Engineer.

On street widening projects where new paving joins the existing paving, the contractor shall overlay the existing paving as shown on the plans or as directed by the City to produce a smooth crown section.

302-11 FOG SEAL

Over all newly laid asphalt paving, the contractor shall apply a seal coat of emulsified asphalt SS-1h as per Section 203-3 of the Standard Specifications. Rate of application shall be approximately 0.10 gallons per square yard or as directed by the Engineer.

302-14 ASPHALT CONCRETE BERMS AND DIKES

302-14.1 General. Asphalt concrete berms and dikes shall be shaped and compacted with an extrusion machine or other equipment capable of shaping and compacting the material to the require cross section.

303-5 CONCRETE CURBS, WALKS, GUTTERS, CROSS GUTTERS, DRIVEWAYS AND ALLEY INTERSECTIONS

303-5.1.3 Driveway Entrances. Unless otherwise specified on the plans or by the Eningeer driveway approaches and alley approaches shall be constructed in accordance with Standard Drawing No. 302.

If a new driveway approach is to connect to an existing curb and gutter, or when an existing curb and gutter depression is to be replaced with a full curb face curb, construction shall be in accordance with Standard Drawing No. 303. Horizontal sawing of curbs is allowed only with prior approval from the Engineer.

Alley approaches which are to drain an alley more than 50 feet long shall have the back of the alley approach at is center depressed by 0.25 feet to accept drainage.

303-5.3.1 Concrete Cleanup. The contractor shall have a concrete washout plan approved the City prior to concrete begin delivered to the site.

303-5.5.2 Curb. Application of class “B” mortar to face of curbs is not required. Stamping of Contractor’s name and year into the curb shall not be performed.

When a straight edge ten (10) feet long is laid on the top or face of the curb or on the surface of gutters, the surface shall not vary more than one-eighth (1/8) inch from the edge of the straight edge; except at grade changes or curves.

303-5.7.1 Rejection of New Construction. The following shall be cause for rejection and

subsequent replacement:

1. Transverse cracks through the C&G;
2. Vertical displacement which causes water to pond in the gutter;
3. Serious or extensive surface imperfections which would cause the possibility of tripping;
4. Transverse cracks causing 5 feet or less of C&G to be "floating," or unattached to other curb and gutter. If the crack is in a driveway depression, remove one-half or all of dimension "B";
5. Cracks causing 25 square feet or less of sidewalks, approaches, cross gutters or aprons to be "floating," or unattached to other approaches, cross gutters, or aprons;
6. Any concrete that has been marked with graffiti.

Rejected concrete work shall be removed by means of a sawcut at a score line. If no score line exists, the minimum removed area or unscored area left in place shall be 50 square feet and the minimum width shall be 4 feet or the full width of the sidewalk.

306-1 OPEN TRENCH OPERATIONS

306-1.1.9 Steel Plate Bridging. If, at the end of the working day, open trench backfilling operations, excavation or potholes have not been properly completed, steel plate bridging shall be required to make the entire roadway section safe and available to pedestrians and the travelling public. The maximum length of steel plate bridging allowed over an open trench for the entire project is 50 feet unless the Contractor obtains prior written approval of the Engineer. Placement of steel plate bridging shall be approved by the Engineer.

The steel plate bridging installation shall conform to the following:

1. The pavement shall be cold planed to a depth equal to the thickness of the plate and to a width and length equal to the dimensions of the plate as directed by Engineer.

2. Approach plate(s) and ending plate (if longitudinal placement) shall be attached to the roadway by a minimum of 2 dowels pre-drilled into the corners of the plate and drilled 2 inches into the pavement. Subsequent plates are butted to each other and tack welded. When steel plates are removed, the dowel holes in the pavement shall be backfilled with either graded fines of asphalt concrete mix, concrete slurry, or an equivalent slurry satisfactory to the Engineer.

The Contractor shall be responsible for daily maintenance of the steel plates and shoring.

Unless prior permission is obtained, steel plate bridging should not exceed 4 consecutive working days in any given week. Backfilling of excavations shall be covered with a minimum 3 inch temporary layer of cold asphalt concrete compacted with a steel wheel roller. Permanent re-paving is required within 15 days of excavation.

The following table shows the minimum thickness of steel plate bridging required for a given trench width:

Trench Width	Minimum Plate Thickness
10"	1/2"
23"	3/4"
31"	7/8"
41"	1"
63"	1 1/4"

For spans greater than 63", a structural design shall be prepared by a California registered Civil Engineer.

Steel plate bridging shall be steel designed for HS20-44 truck loading per the State Bridge Design Specifications Manual. The Contractor shall maintain on the steel plate a non-skid surface having a minimum coefficient of friction equivalent to 0.35 as determined by California Test Method 342. If a different test method is used, the Contractor may utilize standard test plates with known coefficients of friction to correlate skid resistance results to California Test Method 342. These test plates are available from Caltrans District Materials Engineer.

A Rough Road sign (W33), with black lettering on a retroreflective orange background, shall be used in advance of steel plate bridging. This sign is to be used along with other required construction signing.

306-1.1.10 Excavations Adjacent to Trees. The following specifications are to be adhered to when excavating adjacent to street trees in the City of Riverside. Any exception to these requirements must be approved by the Engineer. (Chapter 15.08.020, Riverside Municipal Code.)

No excavation shall take place within the following specified distances from the perimeter of trees at ground level:

Tree Size	Clearance	Tree Size	Clearance
Palm Trees	1.5 feet	13-24 inches diameter	4-1/2 feet
0-6 inches diameter	3.0 feet	25-36 inches diameter	5.0 feet
7-12 inches diameter	3-1/2 feet	37 inches and up	6.0 feet

Tunneling is permitted if it is not through the center of the tree at a depth that will not destroy the anchor roots of the tree. Where it is necessary to excavate adjacent to existing trees, the Contractor shall avoid injuries to trees and tree roots. Excavation in areas where 2-inch and larger roots occur shall be done by hand. All roots 2 inches and larger in diameter shall be tunneled under and shall be heavily wrapped with wet burlap to prevent scarring or drying. Where trenching machine is run close to trees having roots smaller than 2 inches in diameter, the wall of the trench adjacent to the trench shall be hand trimmed, making a clean cut through the roots. Any tree roots 1 inch or larger in diameter shall be painted with two coats of tree seal or approved equal. Trenches adjacent to trees shall be closed within 24 hours. No dirt can be piled up against a tree without a protective separator such as lumber, plywood, etc. The protective separator shall not be nailed to the street tree. The party responsible for any damage to a street tree will be billed in accordance with the Riverside Municipal Code.

306-1.2 Installation of Pipe. The materials used for the construction sanitary sewer shall

remain the same between manholes. When reconstructing sanitary sewer laterals the new pipe shall be the same as the existing lateral.

306-1.2.1 Bedding. Unless otherwise specified on the plans, plastic pipe shall be bedded per Std. Dwg. 452 as follows:

Type of Pipe	Depth of Cover Above Bedding	Bedding
Solid Wall (ABS & PVC)	0 to 4’	Case III
	4’ to 17’	Case I
	17” to 30’	Case II N=D’+1
	Over 30’	Special Design
ABS and PVC Composite	less than 4’	Case II
	4’ to 9’	Case I
	9’ to 21’	Case I
	21’ to 30’	Case II N=D’+1
	Over 30’	Special Design

306-1.3 Backfill and Densification. Trench backfill shall be per Std. Dwg. No. 453. Contractor shall provide to the Engineer compaction test results certified by an approved civil or soils engineer of all work done including AC pavement. All costs for testing shall be borne by the contractor.

306-1.3.2 Mechanically Compacted Backfill. Impact type pavement breakers (stompers) will be permitted over vitrified clay, asbestos cement, cast iron or non-reinforced concrete pipe only after a minimum of four feet of backfill has been placed over the top of pipe and compacted by other means.

306-1.3.9 Backfill in Easements. Backfill shall comply with the same requirements as backfill in streets.

306-1.5.1 Temporary Resurfacing. Trenches and excavation shall be paved with temporary AC pavement immediately following work. All temporary asphalt shall be placed on fully compacted material 3 inches thick and shall be properly compacted flush with existing paving using a vibratory roller or vibratory plate. Except as otherwise approved by the Engineer, not more than 2 weeks shall elapse between the placement of temporary surfacing and its removal and replacement with permanent resurfacing. Temporary asphalt must be kept up and maintained daily at the contractor’s expense.

306-1.7 Trench Shoring. Trench shoring including furnishing and placing such shoring or bracing as required by the Standard Specification or as directed by the Engineer and in compliance with Article 6, Section 1541 of the most current editition of “Construction Safety Order” published by the Department of Industrial Safety, State of California. All shoring plans must be submitted to the Engineer for approval at least seven working days prior to commencing work.

306-7 CURB DRAINS

306-7.1 General. Two 30 inch long No. 3 reinforcing bars shall be embedded in the curb, centered over the drain. ABS pipe is not allowed.

SECTION 313 – STREET NAME AND PERMANENT TRAFFIC CONTROL SIGNS

Traffic control signs and posts shall be installed in accordance with Standard Drawings No. 662 and No. 664.

SECTION 314 – AUTOMATED RED LIGHT ENFORCEMENT SYSTEM

SECTION 314-1 General. Automated red light enforcement system (ARLES) shall conform to provision in Section 86 "Signals, Lighting and Electrical Systems," of the State Standard Specifications and these Special Provisions (See Section 2-5 herein.)

The contractor shall maintain the system operational during all construction phases of the project unless directed by the Engineer. The contractor shall contact Redflex at (310) 350-8907 a minimum of seventy-two (72) hours in advance of relocating ARLES equipment, installing ARLES vehicle detectors, impacting the system, or requiring Redflex forces to meet at the project site. Both contractor and Redflex shall review the construction phasing operations and recommend a temporary vehicle detection (standard or wireless) loops system for the construction phase and will consider the reliability, feasibility, and flexibility to operate during various stages of the work zones.

Redflex shall provide direction as to the relocation of the equipment, proposed work impacting the system and oversee the vehicle detection installation. Contractor shall coordinate with Redflex in order for Redflex to test equipment and configure red light enforcement camera equipment to photograph/record appropriate enforcement zones. It is the City's intention to have the automated red light enforcement system operation during all hours designated as "non-working" hours. During "working hours", the contractor shall ensure the system remains operational for all available traffic lanes. At no time will the system be "non-effective" or unable to record red light running infraction during "working" or "non-working" hours without the approval of the engineer.

The contractor shall notify the engineer and Redflex a minimum of five (5) working days if engineered plans are required to provide temporary improvements to maintain ARLES operational. Contractor shall contact Redflex to determine if Contractor or Reflex is to provide necessary engineered plans to maintain the system operational.

END OF PART 3.

CITY OF RIVERSIDE
BEST MANAGEMENT PRACTICES
FOR TYPICAL CONSTRUCTION ACTIVITIES
(Projects less than one acre)

The discharge of any pollutants into the City storm drain system or natural drainage areas is prohibited per Section 14 of the City Municipal Code and the riverside County Area-Wide Municipal Storm water permit issued by the State Water Resources Control Board. Drainage from construction sites and construction activities is prohibited from entering the City storm drain system and natural drainage areas. Any violations of the above provisions are subject to fines by the city and by the State Water Resources Control Board.

The following best management practices (BMPs) are to be implemented for the construction activities listed. These BMPs are considered to be a minimum of the activities necessary to protect the City storm drain system. The contractor may be required to implement further BMPs to assure no pollutant discharges enter the storm drain system. The contractor needs to work closely with the City inspector to identify any further BMPs, which may be necessary.

CONSTRUCTION ACTIVITIES	BEST MANAGEMENT PRACTICE
Portable Toilets	– The toilets may not be located in the street right of way. Perimeter protection must be placed around the toilet area to contain any drainage from toilet cleaning activities.
Sawcutting, grinding, paving	– Debris from these types of activities are to be swept or vacuumed daily (at a minimum) and disposed of at a landfill. – Drainage from these activities shall be contained or the catch basins down stream of these activities will be protected with sand bags. – Drainage contained shall be vacuumed daily (at a minimum) and the remaining debris disposed of at a landfill
Concrete wash outs	– A washout/spoil area on site must be identified that will contain the concrete washout wastewater. The debris shall be removed at the end the day, or; – The washout must be contained and removed off site daily.
Trenching	– Perimeter protection of the trenching spoil or trench area itself must be provided to prevent any erosion from the site, and – Catch basin protection must be provided to prevent damage from entering the storm drain system. – Any sediment or debris shall be swept up daily

	at a minimum.
Spoil piles	– Spoil piles with the potential for draining off-site shall have perimeter erosion control and may need temporary cover.
Tracking	– Tracking pads are required for larger jobs as well as a continual sweeping plan. – Smaller jobs must sweep daily.
Vehicle maintenance	– Regularly scheduled vehicle maintenance activities such as oil changes and fluid refills shall be conducted off-site. – Any chemicals leaking from faulty equipment will be contained and repaired immediately. – A spill response plan must be identified that properly contains and disposes of any potential spill or leaks of hazardous materials including at a minimum oil, grease, hydraulic fluid, etc.
Vehicle washing	– Vehicle washing shall not occur on site
Sloped areas	– Sloped areas shall at a minimum be protected by perimeter erosion control. Larger slopes may also need erosion control at the top of slopes. These BMPs shall stay in place and be maintained until after the landscaping has completely been established.

STANDARD DETAIL DRAWINGS
DEPARTMENT OF PUBLIC WORKS

NUMBER	TITLE	LATEST REVISION DATE
GENERAL		
1	Symbols *(2 Sheets)*	
2	Abbreviations	
3	Shading Standard	
STREETS		
101	Standard Street Dimensions	
102	Cul-de-sac	
103	Industrial Cul-de-sac	
104	Standard Knuckle	
110	Alley Sections	
111	Class I Bikeway	
115	Alley Turnaround	
116	Right Angle Alley Turn	
120	Intersection Layout	
121	Median Openings	
122	Reverse Taper	
123	Parabolic Flare	
180	Barricade for Dead End Streets	
200	Curb and Gutter	
210	Curb Transitions	
220	Cross Gutters	
250	Asphalt Concrete Berms	
301	Area Covered by Permit for Driveway Approach *(2 Sheets)*	
302	Driveway Approach *(4 Sheets)*	
303	Driveway and Curb Depression (Existing Curb & Gutter)	
304	Wheelchair Ramp *(4 Sheets)*	
325	Sidewalk	
326	Tree Well and Covers	
380	Chain Link Fence *(2 Sheets)*	

STANDARD DETAIL DRAWINGS
DEPARTMENT OF PUBLIC WORKS

NUMBER	TITLE	LATEST REVISION DATE
DRAINS		
400	Catch Basin Type 1 (Back of Curb)	
401	Catch Basin Type 2 *(2 Sheets)*	
402	Catch Basin Inlet	
403	Catch Basin Inlet Steel Plate Alternate	
404	Catch Basin Outlet Transition Structure *(2 Sheets)*	
405	Catch Basin *(2 Sheets)*	
406	Catch Basin *(2 Sheets)*	
407	Catch Basin *(2 Sheets)*	
408	Catch Basin *(2 Sheets)*	
409	Catch Basin *(2 Sheets)*	
410	Parkway Drain *(2 Sheets)*	
412	C.S.P. Inlet	
421	Junction Structure B *(2 Sheets)*	
422	Junction Structure C *(3 Sheets)*	
423	Junction Structure No. 4 *(2 Sheets)*	
424	Concrete Collar (Pipes 12”-66”)	
425	Cleanout Box	
430	Manhole AX *(2 Sheets)*	
431	Manhole EX *(2 Sheets)*	
432	Manhole JM *(3 Sheets)*	
450	Catch Basin Frame and cover (Replacements Only)	
451	Concrete Rings, Reducer and Pipe for Manhole Shaft *(2 Sheets)*	
452	Pipe Bedding (Storm Drains and Sewers) *(2 Sheets)*	
453	Trench Backfill *(2 Sheets)*	
Sewers		
500	Precast Concrete Sewer Manhole	
503	Drop Manhole	
554	Remodeling Details for Sewer Laterals *(2 Sheets)*	
559	Precast Concrete Force main Cleanout *(2 Sheets)*	
560	Sewer Cleanout	
561	Standard Chimney Pipe	
562	Sewer Lateral	
564	Sewer Pipe Encasement Across Trenches	

STANDARD DETAIL DRAWINGS
DEPARTMENT OF PUBLIC WORKS

NUMBER	TITLE	LATEST REVISION DATE
TRAFFIC AND PARKING		
600	Traffic Signal & Lighting Standard Symbols	
606	Traffic Signal Pull Box	
612	Traffic Signal Overhead Electrical Service	
662	Street Name Signs (Major & Minor Streets)	
663	Traffic Signal Street Name Signs *(3 Sheets)*	
664	Sign Standards *(3 Sheets)*	
665	Sign Markers	
667	Electrical Service Details To Traffic Controller	
670	Type “D” Detector	
MISCELLANEOUS		
~~704~~	~~Concrete Block Wall (Freestanding)~~ ~~*(2 Sheets)*~~	NO LONGER IN USE.
740	Private Sewage Disposal Structures	

EXISTING UNDERGROUND UTILITIES:

SANITARY SEWER	8"S	TELEPHONE CONDUIT	T — T
WATER LINE	6"W	ELECTRICAL CONDUIT	E — E
STORM DRAIN	24"SD	TRAFFIC SIGNAL	SIG — SIG
GAS LINE	3"G	FIRE ALARM	F — F
IRRIGATION LINE	20" IRR	CABLE TV	TV — TV
ABANDONED UTILITY	6"G(ABAN'D.)		
ELECTROLIER LIGHTING CONDUIT	ELC — ELC		
(Formerly: STREET LIGHTING)	SL — SL)		

EXISTING TOPOGRAPHY:

BLOCK WALL
BOARD FENCE
WIRE FENCE
CHAIN LINK FENCE

TOP OF SLOPE
TOE OF SLOPE
DIRECTION OF FLOW

S SANITARY SEWER M.H.
C.O. SANITARY SEWER CLEANOUT
D STORM DRAIN M.H.
I IRRIGATION WEIR
W WATER M.H.
G GAS M.H.
E ELECTRIC M.H.
T T TELEPHONE M.H. OR VAULT
W WATER METER
FIRE HYDRANT
SPRINKLER HEAD
VALVE
AIR VALVE
V AIR VENT
B BUS STOP SIGN
B.O. BLOW-OFF VALVE
SP IRRIGATION STAND PIPE

P POLE & GUY ANCHOR
PP POWER POLE
T TELEPHONE POLE
T TELEPHONE RISER
J JOINT USE POLE
PULL BOX
TRAFFIC SIGN
PARKING METER
F FIRE ALARM BOX
STREET NAME SIGN
G GAS METER
MAIL BOX
FAUCET
WALK-DON'T WALK PEDESTRIAN SIGNAL
ELECTRICAL TEST STATION
PPB PEDESTRIAN PUSH BUTTON

RAILROAD TRACKS
RAILROAD SIGN
RAILROAD SIGNAL
TRAFFIC SIGNAL
TRAFFIC SIGNAL ON MAST ARM
TRAFFIC SIGNAL CONTROLLER
TRAFFIC SIGNAL PRESSURE DETECTOR
TRAFFIC SIGNAL LOOP DETECTOR
ELECTROLIER & TRAFFIC SIGNAL ON MAST ARM
ELECTROLIER (UPRIGHT)
ELECTROLIER
STEEL POST
WOOD POST

WHEEL STOP

APPROVED BY
CITY ENGINEER
DATE 5/18/11

MARK	REVISIONS	APPR.	DATE

CITY OF RIVERSIDE
PUBLIC WORKS DEPARTMENT

UNDERGROUND & TOPO LEGEND

STANDARD DRAWING NO. 1

Sheet 1 of 2

EXISTING TOPOGRAPHY (CONT.)

CONCRETE

ASPHALT

EDGE OF PAVEMENT

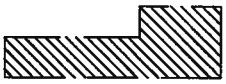
BUILDING

UNDERGROUND STRUCTURE

OVERHANGING STRUCTURE

PCC CURB

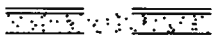
PCC CURB & GUTTER

AC BERM

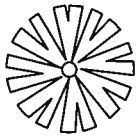
DECIDUOUS TREE

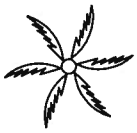
PALM TREE

SHRUBBERY

TREE STUMP

APPROVED BY

CITY ENGINEER

5/18/11

DATE

MARK	REVISIONS	APPR.	DATE

CITY OF RIVERSIDE

PUBLIC WORKS DEPARTMENT

UNDERGROUND & TOPO LEGEND

STANDARD DRAWING NO. 1

Sheet 2 of 2

Ac. - Acre
Ang. or ∠ - Angle
Area - Spell Out
Ave. - Avenue
Avg. - Average
Blvd. - Boulevard
Calc. - Calculated
C - Center
Cir. - Circle
c.f.m. - Cubic Feet/Minute
c.f.s. - Cubic Feet/Second
corr. - Corrugated
Co. - County or Company
C.M.P.- Corrugated Metal Pipe
C.M.P.A. - Corrugated Metal Pipe Arch
cor. - Corner
C.P. Concrete Pipe
C.R. - Curb Return
cu. ft. - Cubic Feet
c.y. - Cubic Yards
D.G. - Decomposed granite
Dr. - Drive
E - East
E'ly - Easterly
Elev.- Elevation
Est. - Estimate
E.T.W. - Edge of Traveled Way
Ft - Foot
F.B. - Field Book
Fd. - found
Gar. - Garage
guy - Guy wire or pole
Hse. - House
Irr. - Irrigation Pipe
Lat. - Latereal
L.F. - Linear Feet
Ln. - Lane
Lt - Left
Min. - Minimum
M.O. - Middle Ordinate
M.O.C. - Middle of Curve

N - North
N'ly - Northerly
NE'ly - Northeasterly
NW'ly - Northwesterly
N.I.C. - Not In Contract
N.T.S. - Not to Scale
No. - Number
Pl. - Place
Pt. - Point
R - Radius
R & R - Remove and Replace
Rd. - Road
R.E. - Registered Engineer
Rec. - Record
Riv. - Riverside
R/S - Record of Survey
Rwy. Railway
Rt. - Right
R.W. Hdr. - Redwood Header
S.B. - San Bernardino
SBB&M - San Bernardino Base and Meridian
S - South
S'ly - Southerly
SE'ly - Southeasterly
SW'ly - Southwesterly
Sec. - Section
Shld. Shoulder
Sq. - Square
Spk. - Spike
St. - Street
Stk. - Stake
T.P. - Top of Pavement
Typ. - Typical
Vic. - Vicinity
V.P.I. - Vertical Point of Intersection
W - West
W'ly - Westerly

APPROVED BY
CITY ENGINEER — DATE 5/18/11

MARK	REVISIONS	APPR.	DATE

CITY OF RIVERSIDE
PUBLIC WORKS DEPARTMENT

STANDARD ABBREVIATIONS

STANDARD DRAWING NO. 2

Sheet 1 of 1

SHADING STANDARDS

PLAN

PROPOSED CONSTRUCTION

- PCC
- AC PAVING (BEHIND CURB)
- AC PAVING (ROADWAY)
- AC OVERLAY
- DG SURFACE
- REMOVE & REPLACE

EXISTING CONSTRUCTION

- PCC
- AC
- BUILDING
- ROOF OR OVER HANG

SECTION

PROPOSED CONSTRUCTION

- PCC
- AC PAVING
- BASE

EXISTING CONSTRUCTION

- PCC
- AC PAVEMENT
- ROCK
- UNDISTURBED SOIL

FILL COMPACTIONS

- 95% RELATIVE COMPACTION
- 90% RELATIVE COMPACTION
- 85% RELATIVE COMPACTION

APPROVED BY

CITY ENGINEER — DATE 5/18/11

MARK	REVISIONS	APPR.	DATE

CITY OF RIVERSIDE

PUBLIC WORKS DEPARTMENT

SHADING STANDARDS

STANDARD DRAWING NO. 3

Sheet 1 of 1

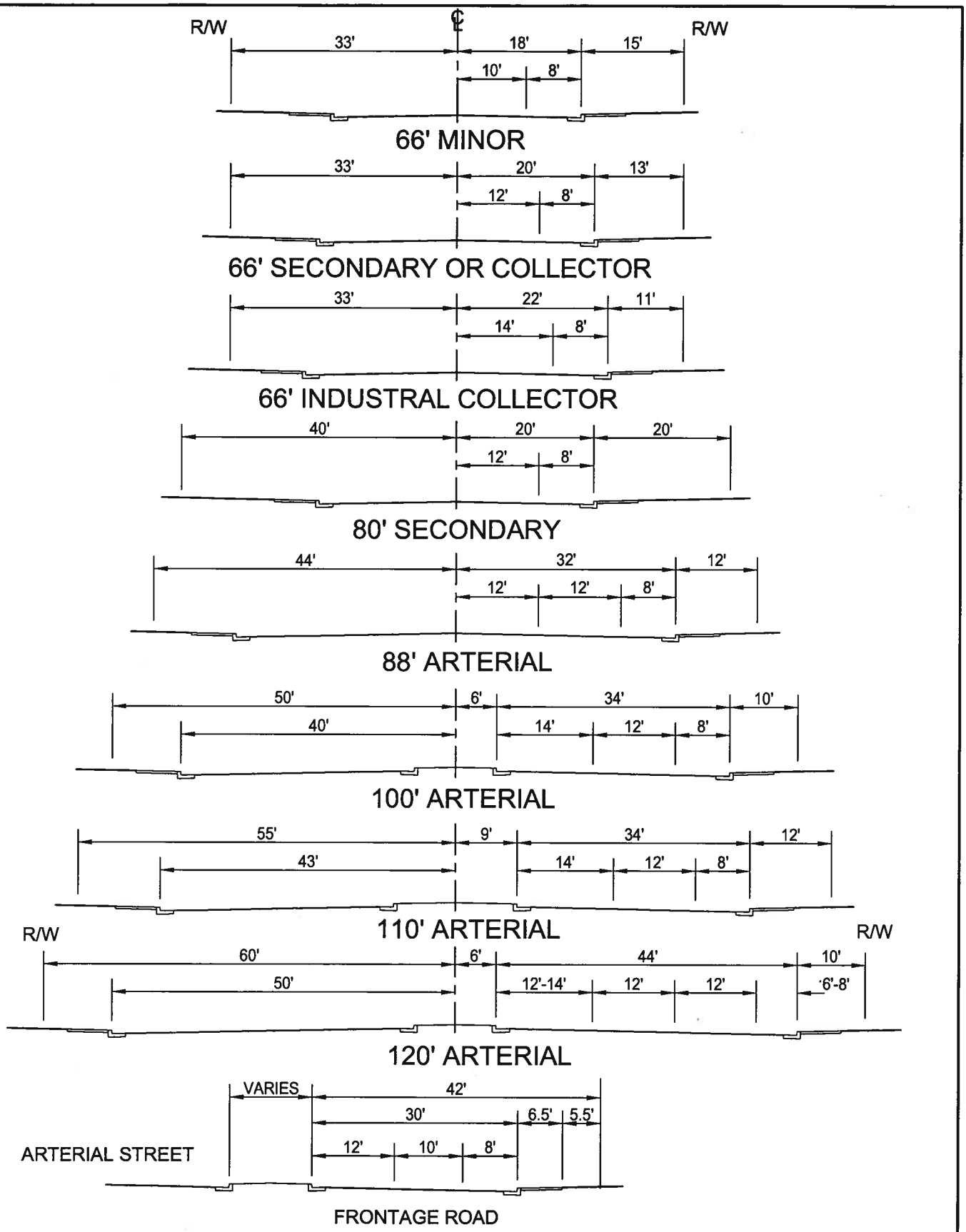

APPROVED BY

CITY ENGINEER

5/18/11

DATE

MARK	REVISIONS	APPR.	DATE

CITY OF RIVERSIDE

PUBLIC WORKS DEPARTMENT

STANDARD STREET DIMENSIONS

STANDARD DRAWING NO. 101

Sheet 1 of 1

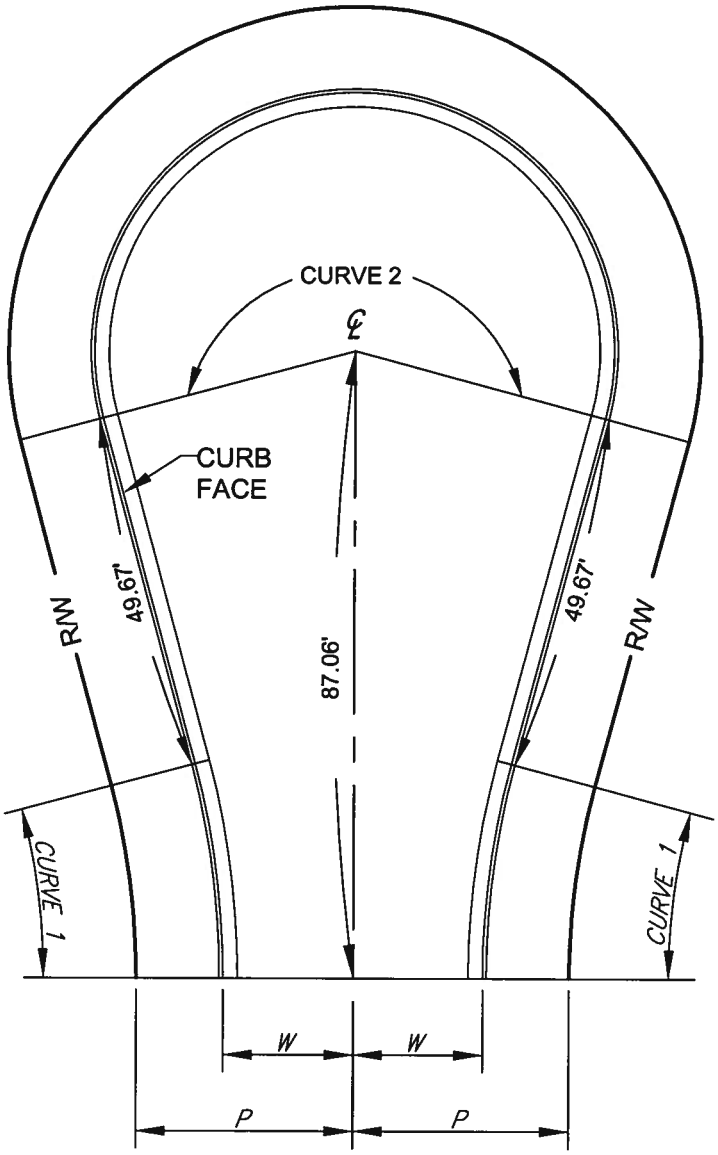

	R/W CURB CURVE DATA							PVMT AREA S.F.
	CURVE 1				CURVE 2			
W	R	△	T	L	R	△	L	
18'	115'	15°	15.14'	30.11'	36'	210°	131.95'	5,991
20'	113'	15°	14.88'	29.58'	38'	210°	139.28'	6,667

	R/W CURB CURVE DATA						
	CURVE 1				CURVE 2		
W	R	△	T	L	R	△	L
30'	103'	15°	13.56'	26.97'	48'	210°	175.93'
33'	100'	15°	13.17'	26.18'	51'	210°	186.93'

NOTE:
An offset cul-de-sac may be used. Radii of curve 1 and curve 2 and the tangent curb line distance to be maintained for the offset cul-de-sac.

APPROVED BY
CITY ENGINEER
5/18/11
DATE

MARK	REVISIONS	APPR.	DATE

CITY OF RIVERSIDE
PUBLIC WORKS DEPARTMENT

CUL-DE-SAC

STANDARD DRAWING NO. 102

Sheet 1 of 1

	CURVE 3		
	R	△	L
CURB	52'	220°	199.67'
R/W	60'	220°	230.38'

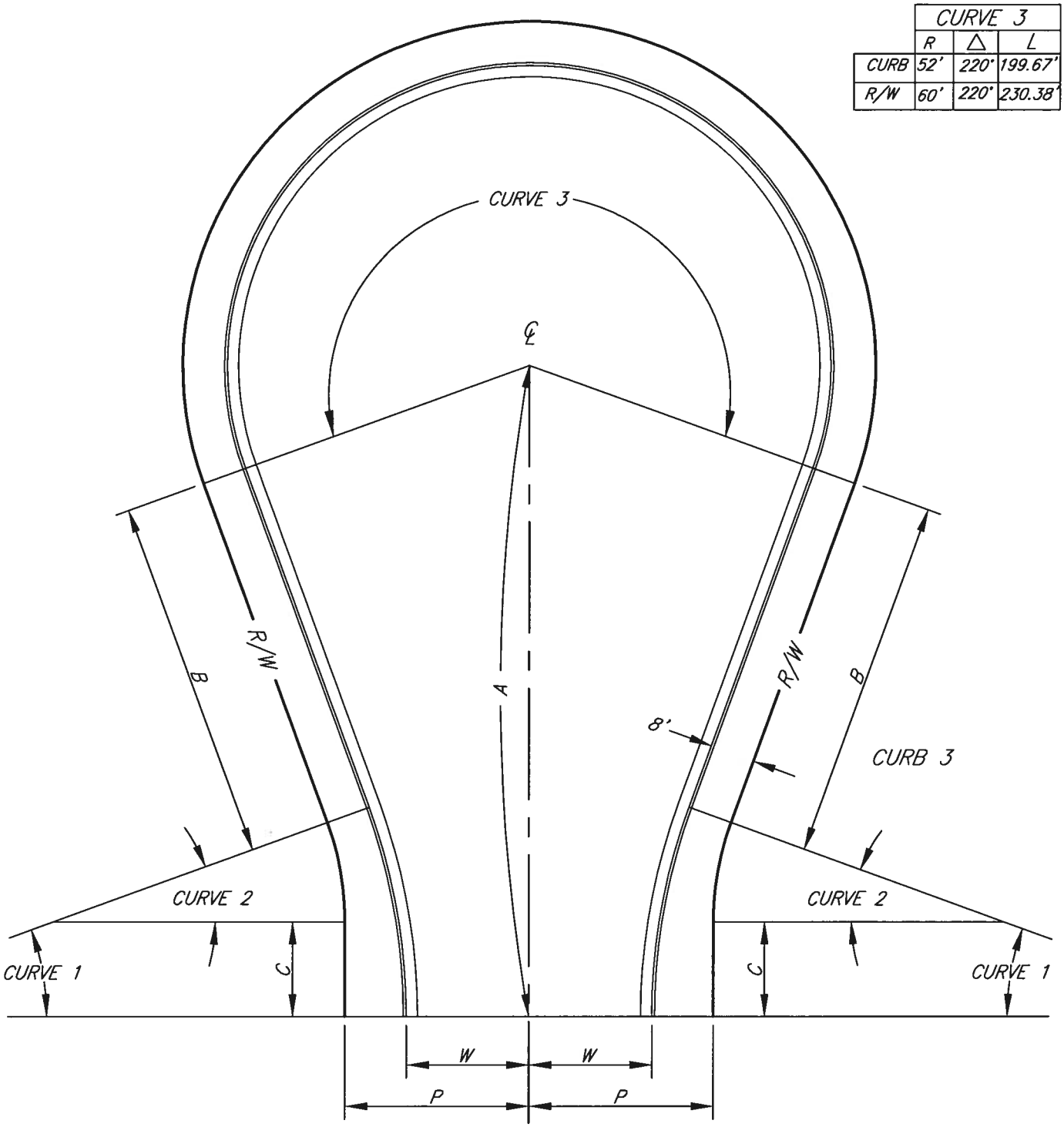

					CURB CURVE DATA								PVMT AREA S.F.
					CURVE 1				CURVE 2				
W	P	A	B	C	R	△	T	L	R	△	T	L	
20'	33'	116.49'	65.00'	28.36'	110'	20°	19.40'	38.40'	19.08'	20°	3.36'	6.66'	11,534
22'	33'	110.99'	59.15'	17.02'	110'	20°	19.40'	38.40'	52.24'	20°	9.21'	18.24'	11,404

APPROVED BY

CITY ENGINEER — DATE 5/18/11

MARK	REVISIONS	APPR.	DATE

CITY OF RIVERSIDE

PUBLIC WORKS DEPARTMENT

INDUSTRUAL CUL-DE-SAC

STANDARD DRAWING NO. 103

Sheet 1 of 1

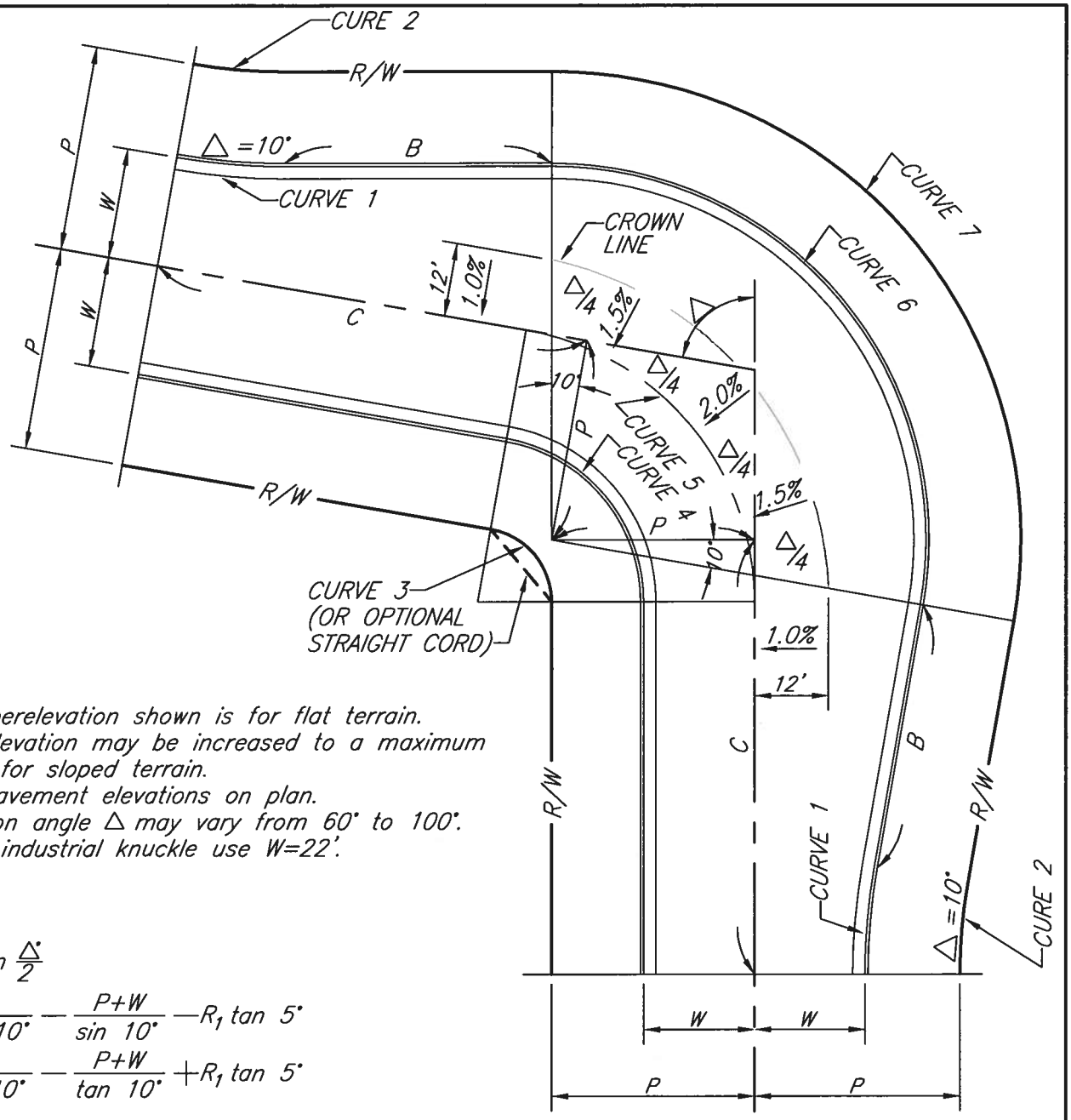

1. The superelevation shown is for flat terrain. Superelevation may be increased to a maximum of 6% for sloped terrain.
2. Show pavement elevations on plan.
3. Deflection angle Δ may vary from 60° to 100°.
4. For an industrial knuckle use W=22'.

$$A = P \tan \frac{\Delta^\circ}{2}$$

$$B = \frac{R_6}{\tan 10^\circ} - \frac{P+W}{\sin 10^\circ} - R_1 \tan 5^\circ$$

$$C = \frac{R_6}{\sin 10^\circ} - \frac{P+W}{\tan 10^\circ} + R_1 \tan 5^\circ$$

				100°>Δ>75°			75°>Δ>65°			65°>Δ>60°						
P	W	R_1	R_2	R_3	R_4	R_5	R_3	R_4	R_5	R_3	R_4	R_5	R_6	R_7	B	C
30	18	100	88	15	27	45	23	35	53	33	45	63	61	73	60.78	87.81
	20	100	90	17	27	47	25	35	55	35	45	65	61	71	49.26	76.47
	22	111	103	27	35	57	32	40	62	42	50	72	65	73	59.47	89.11
33	18	100	85	12	27	45	20	35	53	30	45	63	61	76	43.50	70.80
	20	100	87	14	27	47	22	35	55	32	45	65	61	74	31.98	59.46
	22	111	100	24	35	57	32	40	62	39	50	72	65	76	42.19	72.11

APPROVED BY
CITY ENGINEER
5/18/11
DATE

MARK	REVISIONS	APPR.	DATE

CITY OF RIVERSIDE

PUBLIC WORKS DEPARTMENT

STANDARD KNUCKLE

STANDARD DRAWING NO. 104

Sheet 1 of 1

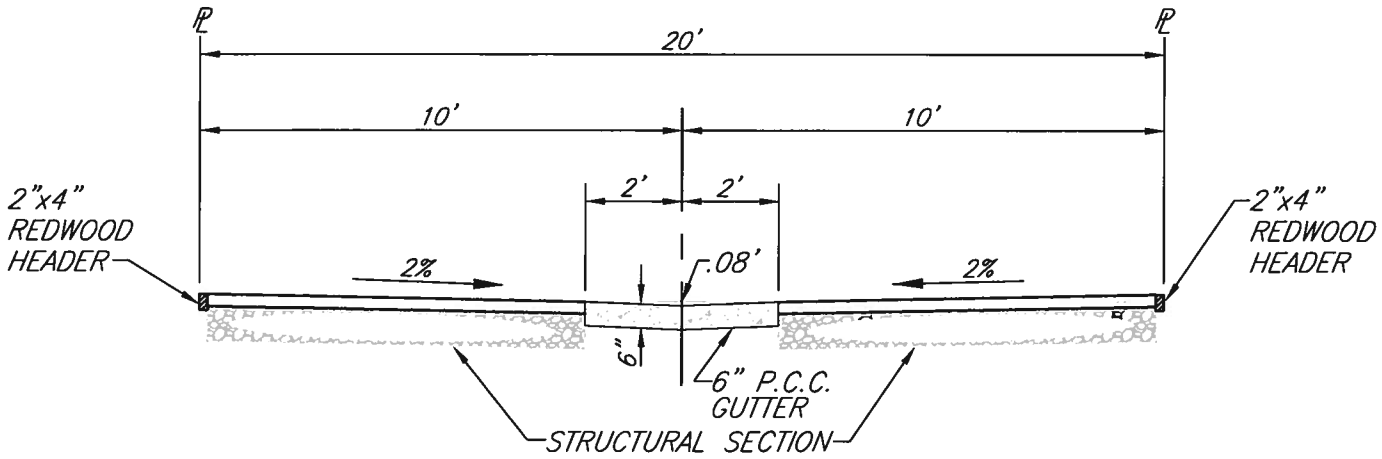

TYPE 1
GRADES LESS THAN 2.00%

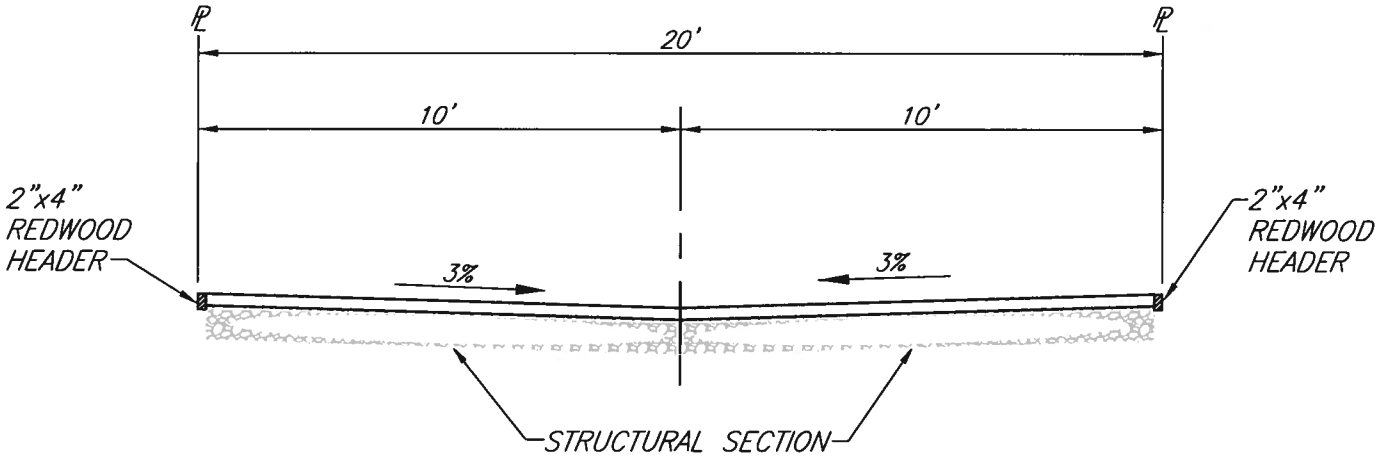

TYPE 2
GRADES OVER 2.00%

NOTES:

1. Alley width can be reduced in case of existing substandard right-of-way.
2. Cross fall may be adjusted to meet existing improvements (1% min.).
3. Redwood Headers required at edge of A.C. wherever edge is not protected by other structural materials, such as existing pavement, concrete, etc.
4. Concrete for valley gutter shall be Class 520-C-2500.
5. Structural section shall be as shown on plan (T.I.=5.)
6. Weakened plane joints shall be constructed in valley gutter at 10' intervals.

APPROVED BY
CITY ENGINEER — DATE 5/18/11

MARK	REVISIONS	APPR.	DATE

CITY OF RIVERSIDE
PUBLIC WORKS DEPARTMENT

ALLEY SECTIONS

STANDARD DRAWING NO. 110

Sheet 1 of 1

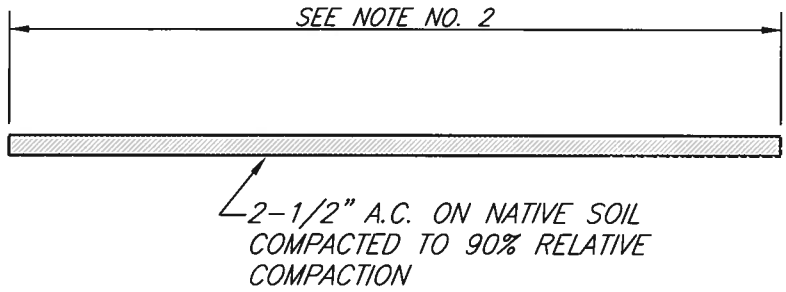

NOTES:

1. Cross slopes and longitudinal slopes shall be as directed by the Engineer and in such a manner as to provide for adequate drainage and smooth riding characteristics. Cross slope shall not be less than 2% nor more than 5%.

2. The minimum width of the bikeway shall be 8' for a two-way bikeway and 5' minimum width per highway design manual for a one-way bikeway unless otherwise shown on plan.

3. Location and alignment of bikeway shall be as shown on plans.

4. All tree limbs overhanging the bikeway and less than 8' above the bikeway shall be trimmed back as directed by the Engineer. Minimum lateral clearance to obstructions shall be 3'.

5. Asphaltic Concrete shall be Class D2-PG-64-10.

6. Prior to placing asphaltic concrete, apply an approved herbicide, rate of application per manufacturers recommendations.

APPROVED BY			
Kim Boyd		5/18/11	
CITY ENGINEER		DATE	
MARK	REVISIONS	APPR.	DATE

CITY OF RIVERSIDE
PUBLIC WORKS DEPARTMENT

CLASS I BIKEWAY

STANDARD DRAWING NO. 111

Sheet 1 of 1

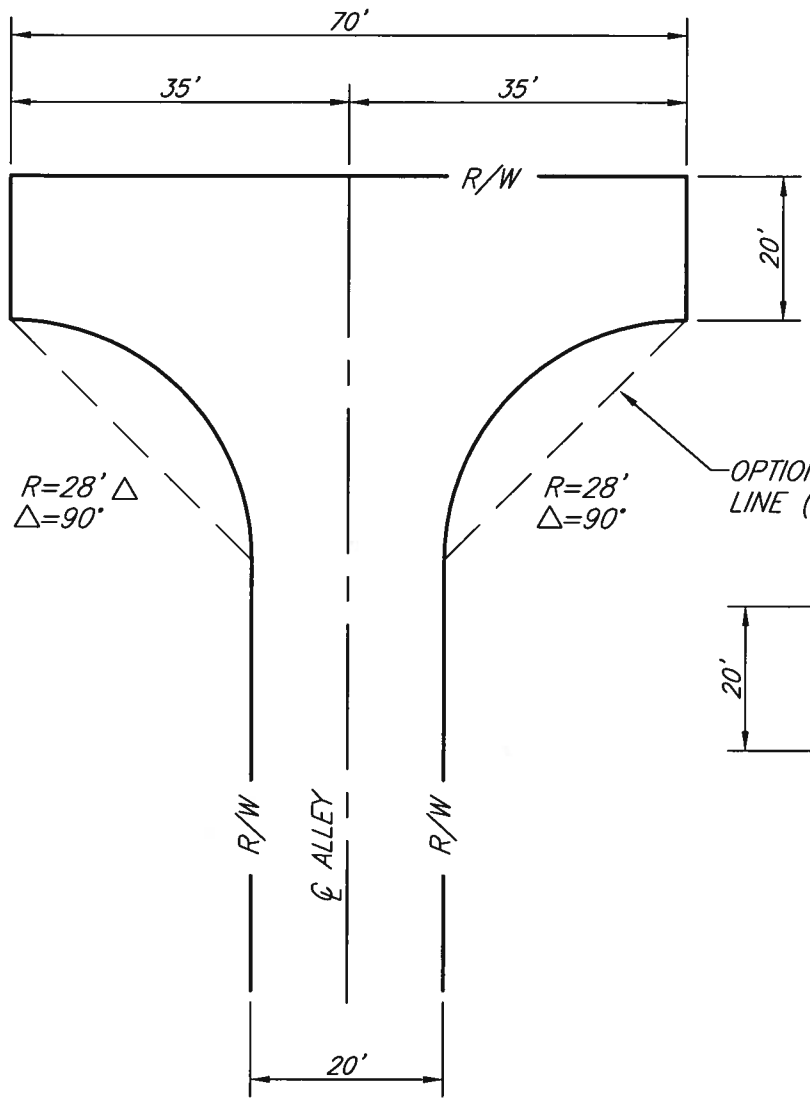

ALTERNATE "A"

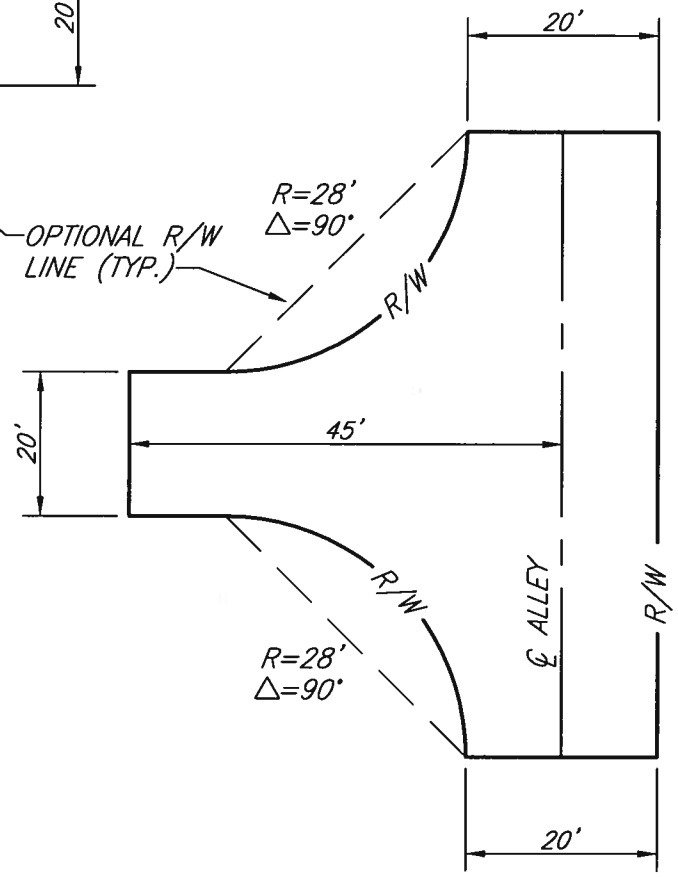

ALTERNATE "B"

NOTES:

1. The Engineer has the option of using either alternate.
2. Pave entire right-of-way per Standard Drawing No. 110.
3. The Engineer may use optional Right-of-way lines as shown for each alternate.

APPROVED BY			
CITY ENGINEER		DATE 5/18/11	
MARK	REVISIONS	APPR.	DATE

CITY OF RIVERSIDE
PUBLIC WORKS DEPARTMENT

ALLEY TURNAROUND

STANDARD DRAWING NO. 115

Sheet 1 of 1

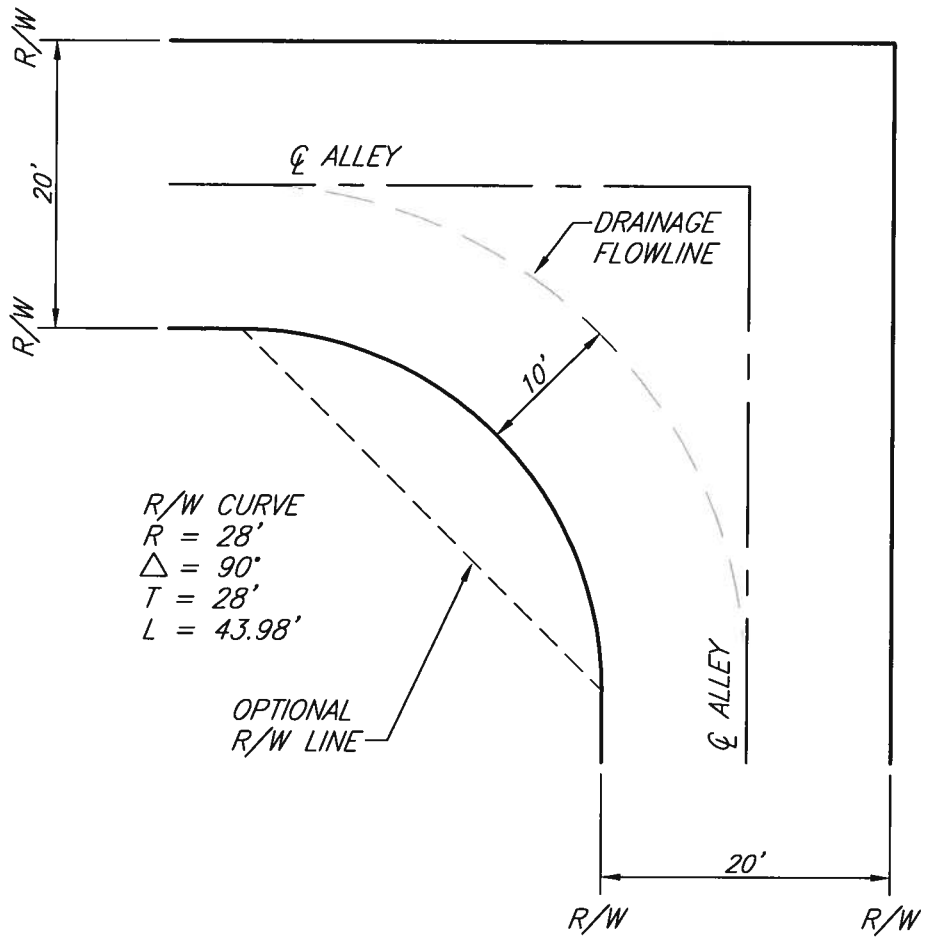

NOTES:

1. Pave entire right-of-way per Standard Drawing No. 110.
2. The Engineer may use optional right-of-way line as shown.

APPROVED BY			
CITY ENGINEER		DATE 5/18/11	
MARK	REVISIONS	APPR.	DATE

CITY OF RIVERSIDE

PUBLIC WORKS DEPARTMENT

RIGHT ANGLE ALLEY TURN

STANDARD DRAWING NO. 116

Sheet 1 of 1

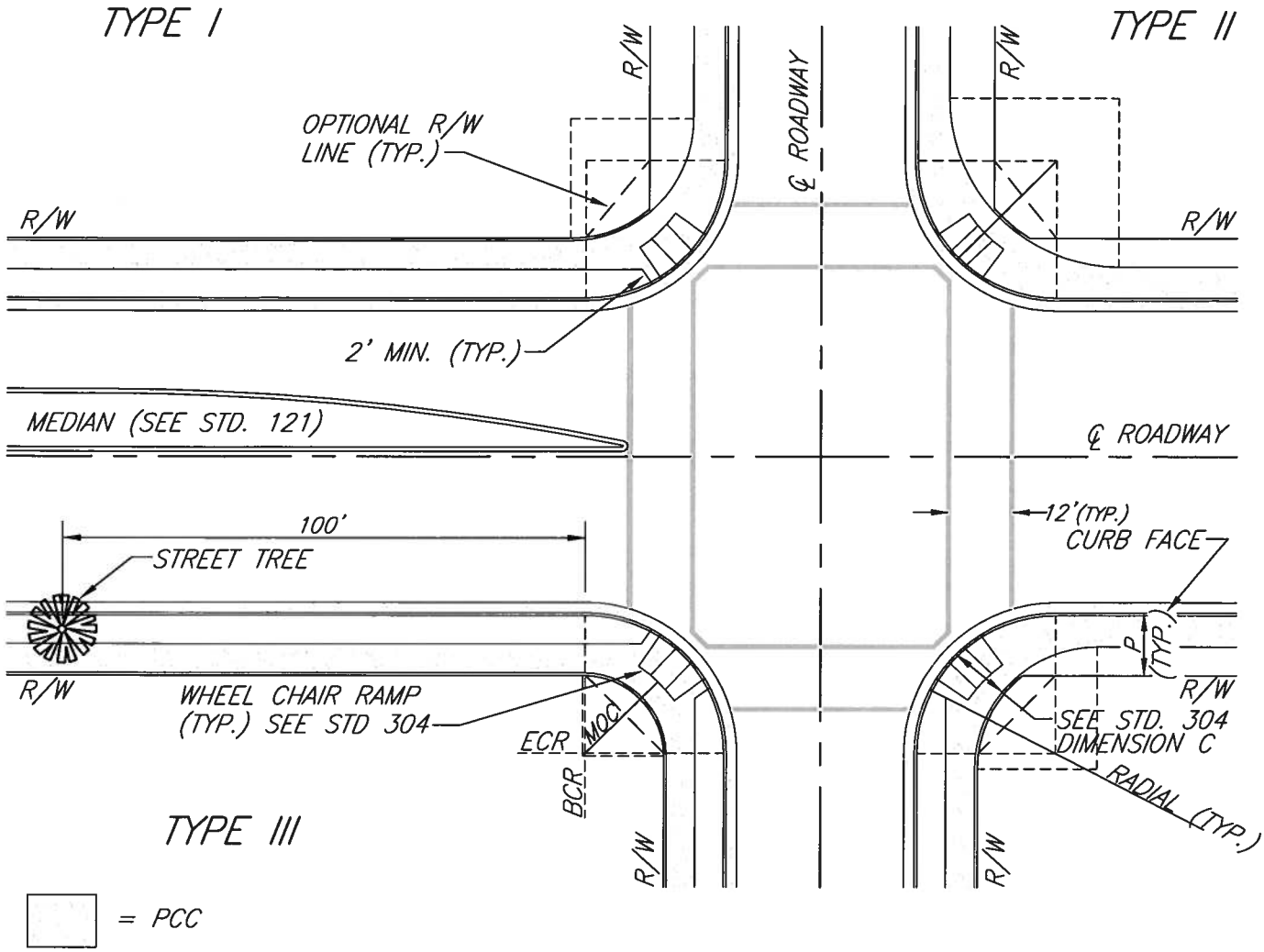

NOTES:

1. CURB RETURN RADIUS SHALL BE 27' EXCEPT THAT IT SHALL BE 35' ON STREETS: A) SHOWN ON THE CIRCULATION AND TRANSPORTATION ELEMENT OF THE GENERAL PLAN.
   B) IN INDUSTRIAL AREAS.
   C) AS DETERMINED BY THE CITY ENGINEER.
2. R/W CURVES SHALL BE CONCENTRIC WITH BACK OF SIDEWALK CURVES.
3. WHERE WHEEL CHAIR RAMPS ARE REQUIRED SEE STANDARD DRAWING 304 FOR LOCATION.
4. WHERE INTERSECTION ANGLE IS SKEWED MORE THAN 10%, CROSSWALK LOCATION SHALL BE DETERMINED BY THE TRAFFIC ENGINEER.
5. WHERE INTERSECTION ANGLE IS SKEWED BY MORE THAN 5% AND/OR WHERE "P" IS GREATER THAN 15', BACK OF SIDEWALK CURVES SHALL BE DETERMINED BY THE ENGINEER TO MAINTAIN 4' MINIMUM BETWEEN THE BACK OF SIDEWALK AND BACK OF WHEEL CHAIR RAMP.
6. MEDIAN TO END AT CROSSWALK AS SHOWN.
7. THE CHART FOR BACK OF SIDEWALK CURVES IS OPTIONAL. MINIMUM DISTANCE FROM CURB FACE TO BACK OF SIDEWALK VARIES WITH THE HEIGHT OF THE CURB FACE, WITH 0.5' MINIMUM DISTANCE FROM THE BACK OF SIDEWALK TO RIGHT-OF-WAY.

BACK OF SIDEWALK CURVES

TYPE	P	C.R. RADIUS			
		27'		35'	
		6"CF	8"CF	6"CF	8"CF
I	12'	26.5'	33'	35'	41'
	15'	21'	28'	29'	36'
II	N/A	35'	42'	44'	49.5'
III	12'*	16'	22.5'	24'	30.5'
	13'*	14.5'	21'	22.5'	29'
	15'*	7.5'	14'	15.5'	22'

* IF "P" IS DIFFERENT FOR INTERSECTING STREETS, USE LARGER VALUE.

APPROVED BY
CITY ENGINEER
DATE 5/18/11

MARK	REVISIONS	APPR.	DATE

CITY OF RIVERSIDE
PUBLIC WORKS DEPARTMENT

INTERSECTION LAYOUT

STANDARD DRAWING NO. 120

Sheet 1 of 1

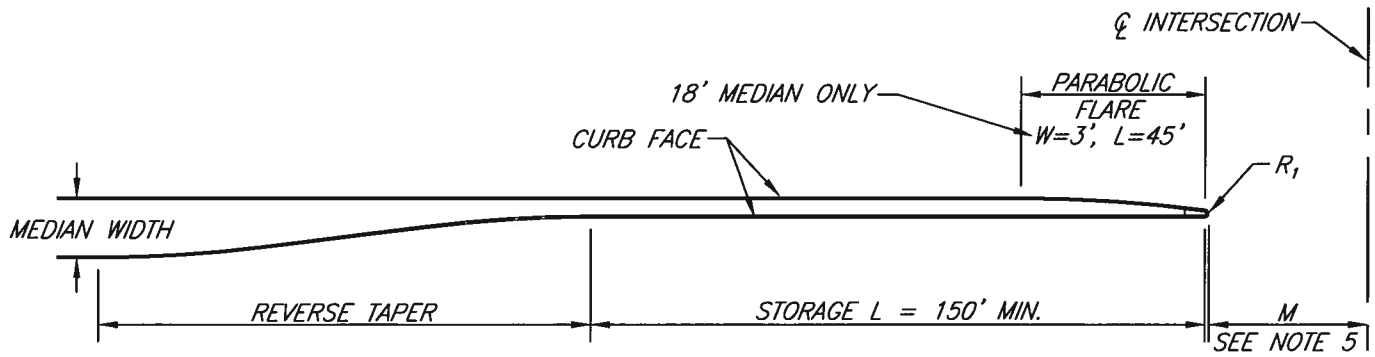

TYPE I – PROVIDES STORAGE FOR LEFT TURN

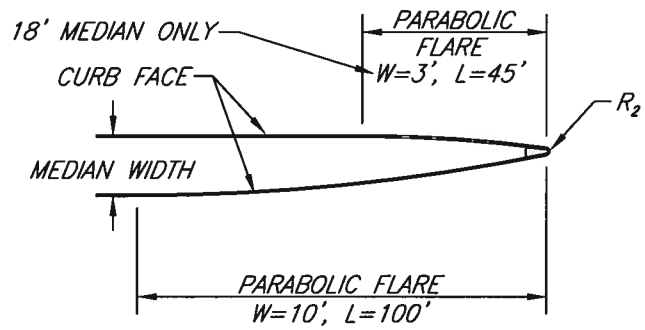

TYPE II – PROVIDES FOR LEFT TURN WITH NO STORAGE

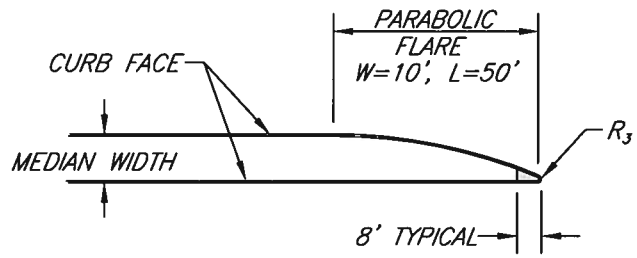

TYPE III – FOR USE WHERE LEFT TURN IS PROHIBITED

NOTES:

1. Show all median opening details on plan.
2. All median openings require approval of the City Traffic Engineer.
3. Lengths of flares, reverse tapers, and storage lanes may be changed because of physical limitations or traffic requirements.
4. Type II and II are normally used at "T" intersections only.
5. For intersections with driveways M=30'. For intersections with streets see Standard Dwg. 120.

REFERENCE DWGS.

Std. 122 Reverse tapers.
Std. 123 Parabolic flares.

MEDIAN DIMENSIONS (FEET)					
MEDIAN WIDTH	REVERSE TAPER		NOSE RADIUS		
	W	L	R_1	R_2	R_3
18	10	120	2.5	2.5	4
12	10	120	1	1	1

APPROVED BY
CITY ENGINEER — DATE 5/18/11

MARK	REVISIONS	APPR.	DATE

CITY OF RIVERSIDE
PUBLIC WORKS DEPARTMENT

MEDIAN OPENINGS

STANDARD DRAWING NO. 121
Sheet 1 of 1

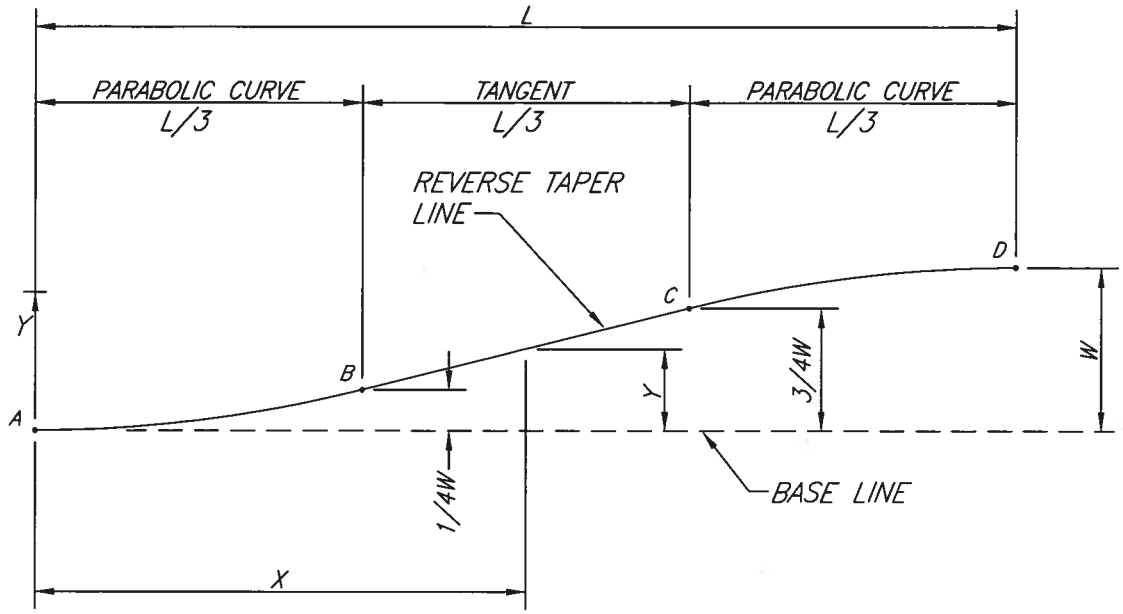

Origin is at point A

AB: $Y=2.25W\left(\frac{X}{L}\right)^2$

BC: $Y=0.50W\left(\frac{3X}{L}-0.5\right)$

CD: $Y=0.5W\left(-4.5\left(\frac{X}{L}\right)^2+9\left(\frac{X}{L}\right)-2.5\right)$

NOTE:

1. Base Line is parallel to traveled way.
2. Where the base line is curved the central portion will not be tangent. Use proportional offsets to define curve.

L	DISTANCE "X" ALONG BASE LINE (FT.)									
60'	5	10	15	20	30	40	45	50	55	60
90'	7.5	15	22.5	30	45	60	67.5	75	82.5	90
120'	10	20	30	40	60	80	90	100	110	120
W	OFFSET "Y" FROM BASE LINE (FT.)									
8'	0.12	0.50	1.12	2.00	4.00	6.00	6.88	7.50	7.88	8.00
9'	0.14	0.56	1.26	2.25	4.50	6.75	7.74	8.44	8.86	9.00
10'	0.16	0.62	1.41	2.50	5.00	7.50	8.59	9.38	9.84	10.00
11'	0.17	0.69	1.55	2.75	5.50	8.25	9.45	10.31	10.83	11.00
12'	0.19	0.75	1.69	3.00	6.00	9.00	10.31	11.25	11.81	12.00

APPROVED BY

CITY ENGINEER

5/18/11
DATE

MARK	REVISIONS	APPR.	DATE

CITY OF RIVERSIDE
PUBLIC WORKS DEPARTMENT

REVERSE TAPER

STANDARD DRAWING NO. 122

Sheet 1 of 1

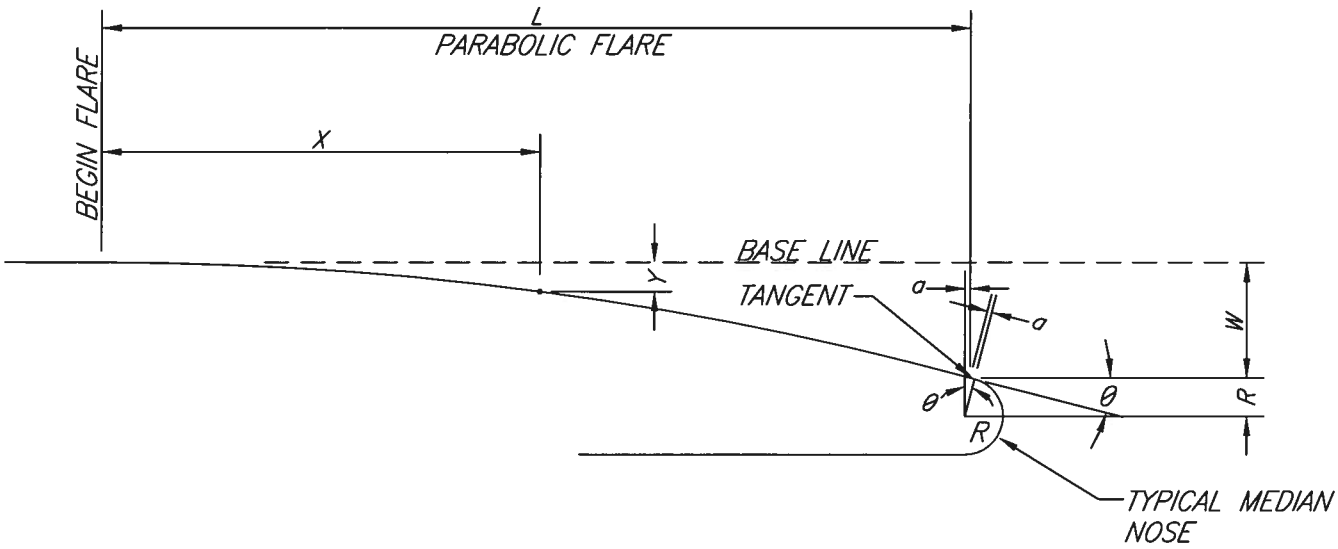

		OFFSET (Y) AT DISTANCES (X) ALONG BASE LINE (FT).														
W	L \ X	10	20	25	30	40	45	50	60	70	75	80	90	100	θ	TAN 1/2 θ
5	25	0.80	3.20	5.00											21°48'05"	.1926
10	50	0.40	1.60		3.60	6.40		10.00								
5	50	0.20	0.80		1.80	3.20		5.00							11°18'36"	.0990
10	100	0.10	0.40		0.90	1.60		2.50	3.60	4.90		6.40	8.10	10.00		
3	45	0.15	0.59		1.33	2.37	3.00								7°35'41"	.0664
5	75	0.09	0.36		0.80	1.42		2.22	3.20	4.36	5.00					
6	90	0.07	0.30		0.67	1.19		1.85	2.67	3.63		4.74	6.00			

NOTE:

1. Show W, L, and "begin flare" station plan.

DESIGN DATA

$$\tan\theta = \frac{2W}{L}$$

$$a = R \tan\frac{1}{2}\theta$$

$$Y = W\left(\frac{X}{L}\right)^2$$

APPROVED BY

CITY ENGINEER

5/18/11

DATE

MARK	REVISIONS	APPR.	DATE

CITY OF RIVERSIDE

PUBLIC WORKS DEPARTMENT

PARABOLIC FLARE

STANDARD DRAWING NO. 123

Sheet 1 of 1

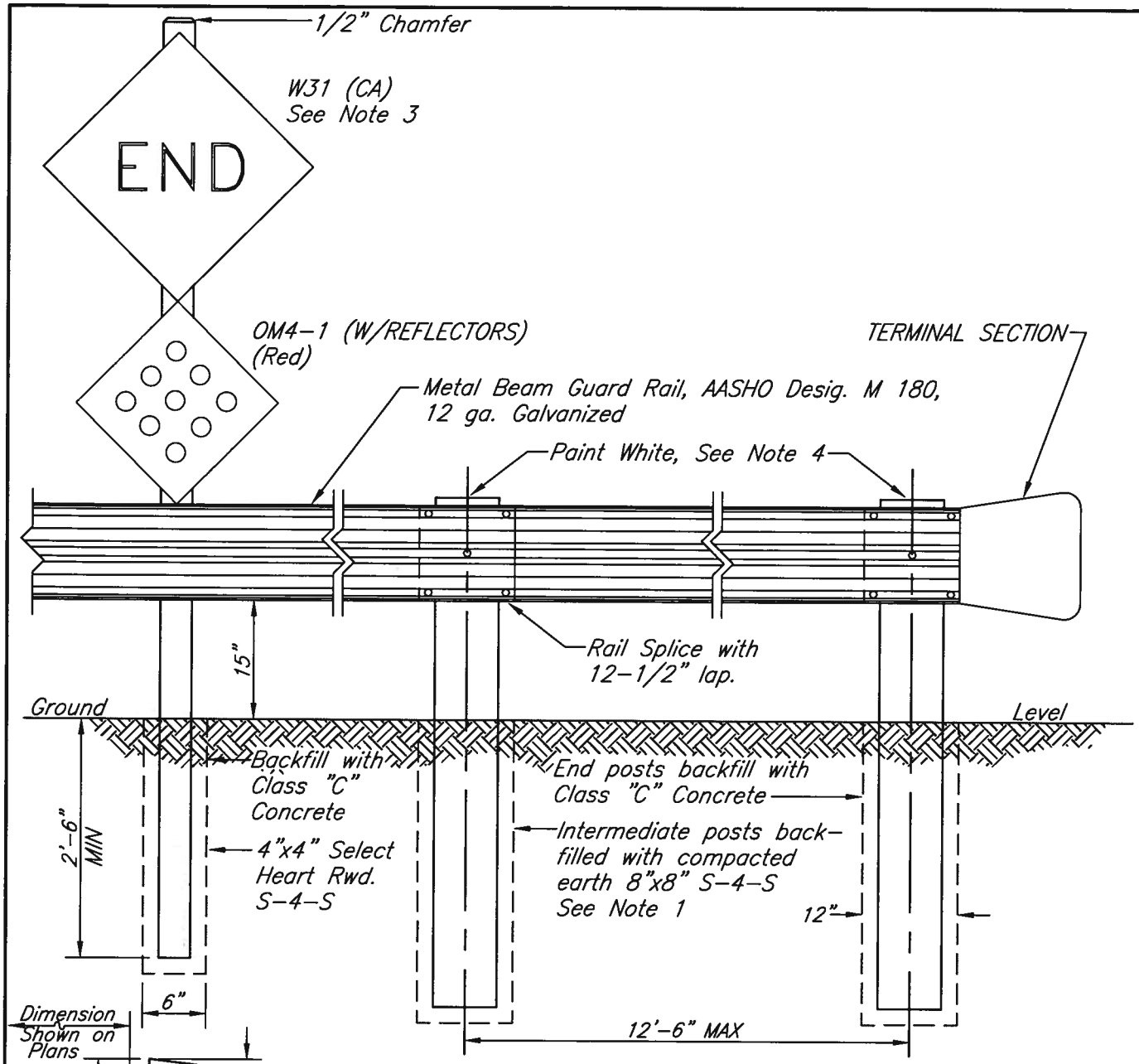

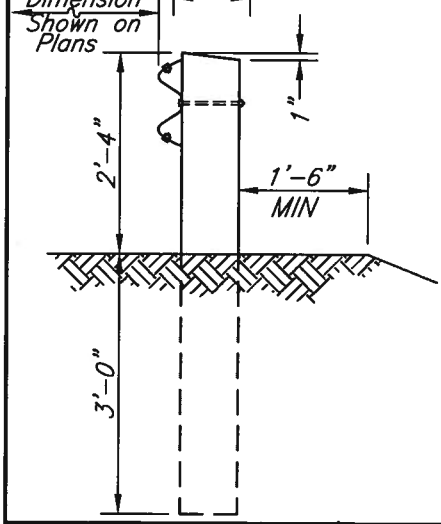

NOTES:

1. Barricade posts shall be Dense Structural Redwood or Construction Grade Douglass Fir free of Heart Center. Douglas Fir shall be pressure treated with approved salts such that the posts may be painted.
2. Overall length of barricade shall be within R/W of street and terminal sections of barricade shall be as close to R/W lines as use of standard 12'-6" section lengths will allow.
3. Signs shall be a W-31 (CA) (36"x36"-Black on Yellow reflective sheet) and a OM4-1 (36"x36"-Red Reflective sheet) signs shall be on .08" Thick Aluminum Blanks. Signs shall be located on Centerline of each approaching driving lane, and mounted on 4"x4"x10'-0" redwood posts. No portion of the signs shall be below top of guardrail.
4. All 8"x8" posts shall be painted with one coat of wood primer and two coats of fast drying paint for wood.

APPROVED BY

CITY ENGINEER — DATE 5/18/11

MARK	REVISIONS	APPR.	DATE

CITY OF RIVERSIDE

PUBLIC WORKS DEPARTMENT

BARRICADE
FOR DEAD END STREETS

STANDARD DRAWING NO. 180

Sheet 1 of 1

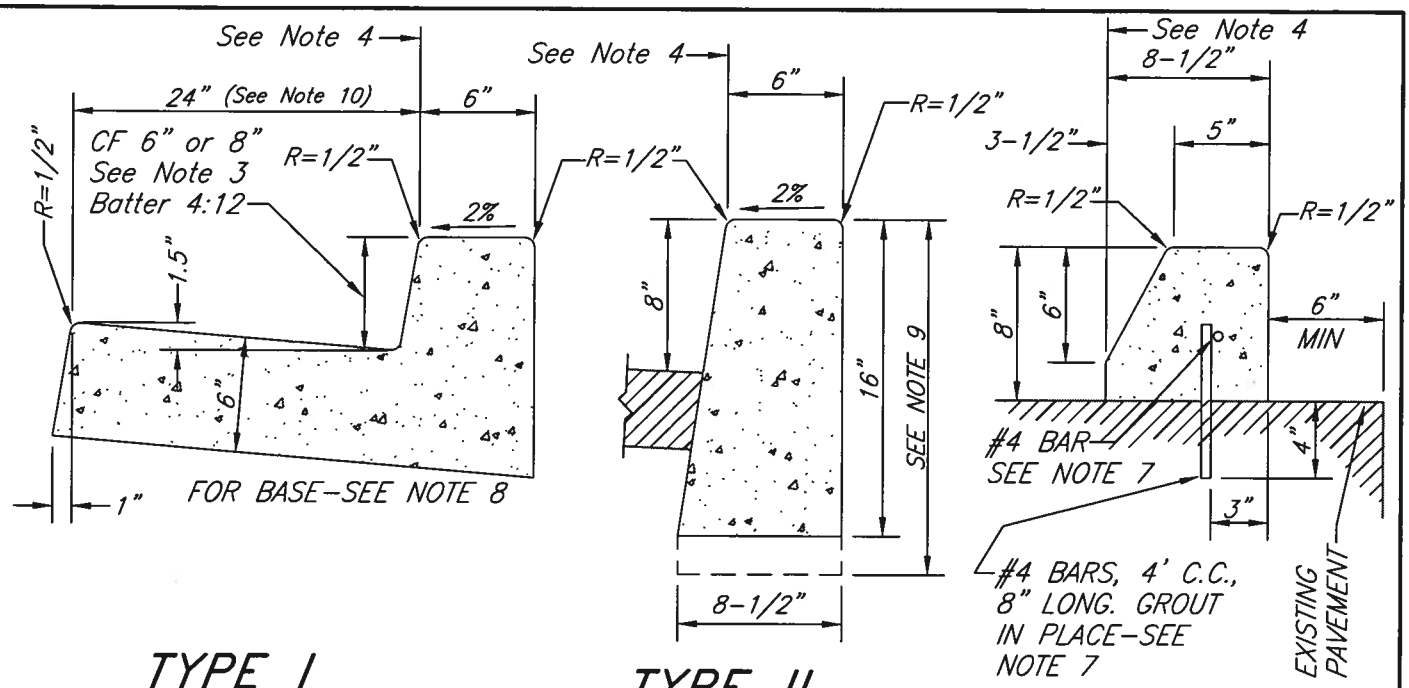

TYPE I

TYPE II

TYPE III

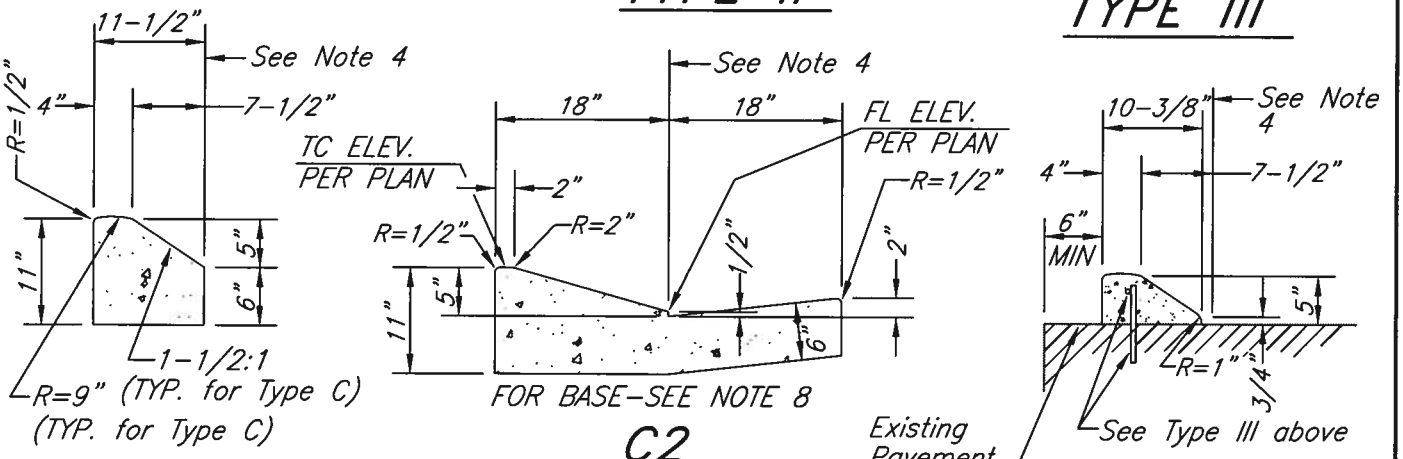

C1

C2

TYPE C

C3

(All C&G shall have BMP protection once forms are removed or 24 Hrs after installed.)

NOTES:

1. Concrete shall be CLASS S60-C-3250 for formed curb or extruded curb.
2. Types II and III curb shall be used only where pavement slopes away from curb except as approved by City Engineer.
3. Types I, II, or III curb face shall be as specified on plans.
4. Curb location dimensions on plan shall be to this point.
5. Expansion joints (1/2" thick) shall be installed at all curb returns.
6. Weakened plane joints shall be constructed at 10' intervals throughout the length of the curb, at quarter points of curb returns, and at any point where the curb section is interrupted by a drainage outlet through the curb.
7. Epoxy approved by City may be used in lieu of bars.
8. When structural section thickness exceeds 14", the base shall be continued under curb & gutter.
9. Next to irrigation areas the curb height shall be the larger of 18" or the bottom of the base.
10. Where grade is equal to or greater than 0.4%, curb and gutter shall be staked with 3' offsets at 25' intervals. Where grade is less than 0.4%, curb and gutter shall be staked with 3' offsets 12.5' intervals and two rows of number 3 re-bar shall be placed in gutter with 3/4" dowel dowel pins at all expansion joints.

CONCRETE QUANTITIES		
TYPE	C.F.	C.Y. PER L.F.
I	6"	0.05825
I	8"	0.06211
II	8"	0.02972
III	8"	0.0147
C1	—	0.02752
C2	—	0.06457
C3	—	0.00965

APPROVED BY

CITY ENGINEER

5/18/11

DATE

MARK	REVISIONS	APPR.	DATE

CITY OF RIVERSIDE

PUBLIC WORKS DEPARTMENT

CURB AND GUTTER

STANDARD DRAWING NO. 200

Sheet 1 of 1

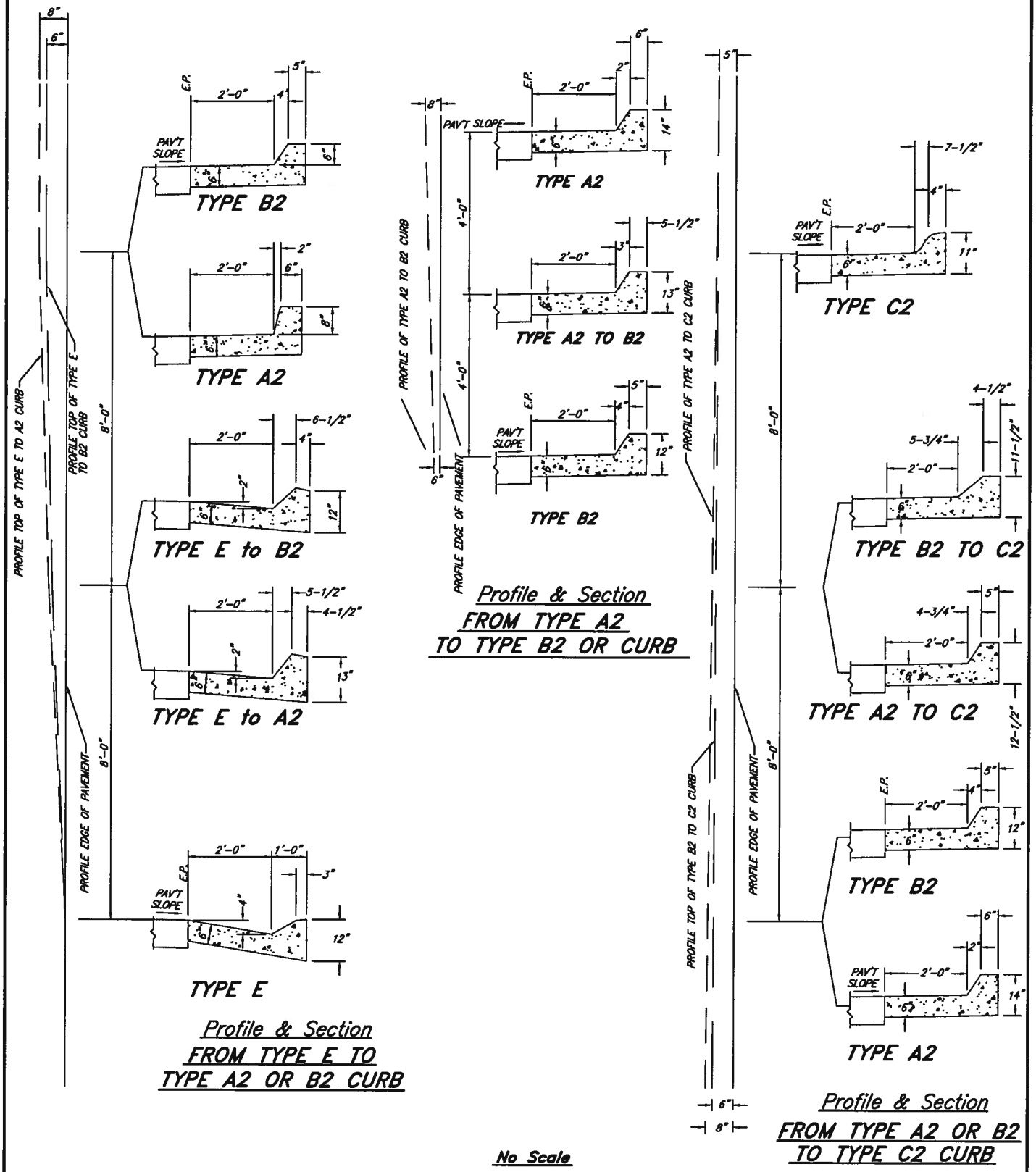

APPROVED BY

CITY ENGINEER — DATE 5/18/11

MARK	REVISIONS	APPR.	DATE

CITY OF RIVERSIDE

PUBLIC WORKS DEPARTMENT

CURB TRANSITIONS

STANDARD DRAWING NO. 210

Sheet 1 of 1

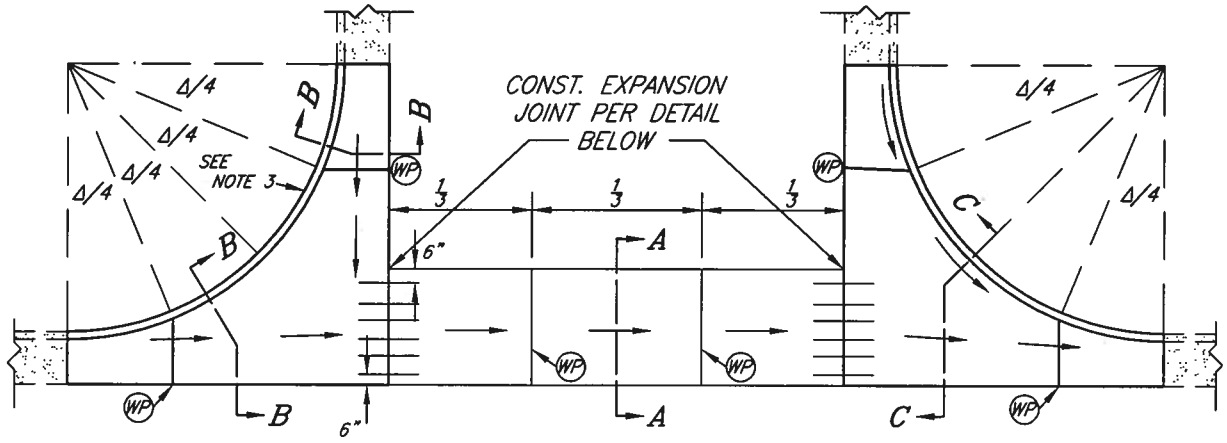

PLAN VIEW

W	D
6'	1"
8'	1¼"
10'	1½"

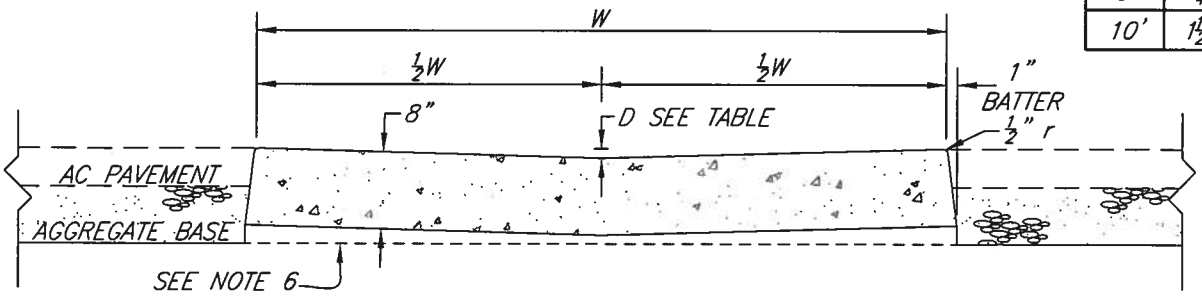

SECTION A – A

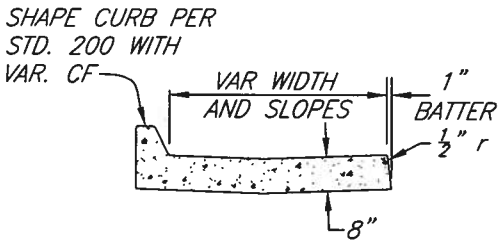

SECTION B – B

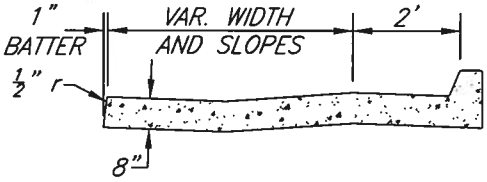

SECTION C – C

NOTES:

1. Concrete shall be class 560–C–3250.
2. W shall be 6' unless otherwise specified.
3. Reduce CF to insure drainage away from FL on upstream curb return.
4. Install ½" expansion joints at curb returns.
5. Construct weakened plane joints at locations indicated by (WP).
6. When structural section exceeds 14", the base shall be continued under cross gutter.
7. For commercial driveway approach see STD 302.

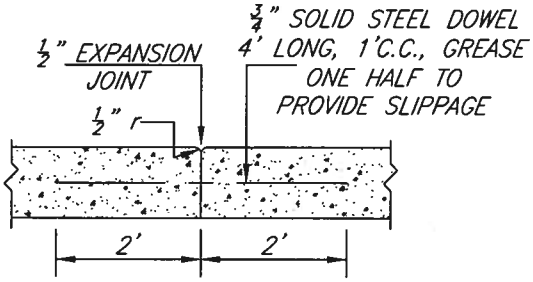

EXPANSION JOINT DETAIL

APPROVED BY

CITY ENGINEER — DATE 5/18/11

MARK	REVISIONS	APPR.	DATE

CITY OF RIVERSIDE

PUBLIC WORKS DEPARTMENT

CROSS GUTTERS

STANDARD DRAWING NO. 220

Sheet 1 of 1

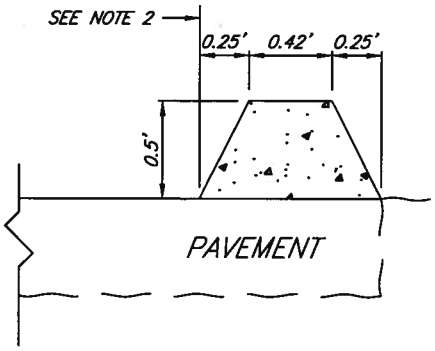

TYPE I – TRAPEZOIDAL

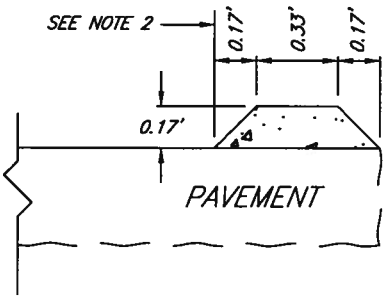

TYPE II – TRAPEZOIDAL

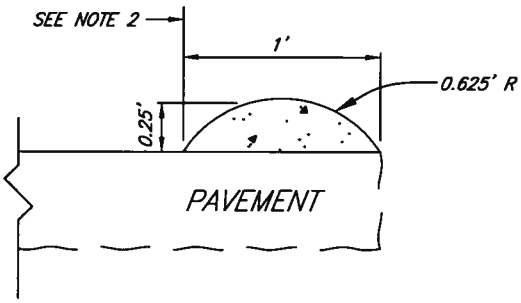

TYPE III – ROLLED

NOTES:

1. Asphalt concrete for berm shall be Class D2–DG64–10
2. Berm location dimensions on plan shall be to this point.
3. The type of berm to be used shall be specified on the plans.

* WITH CITY ENGINEER'S APPROVAL ON SMALL QUANTITIES USE AR–8000

APPROVED BY			
CITY ENGINEER		DATE 5/18/11	
MARK	REVISIONS	APPR.	DATE

CITY OF RIVERSIDE

PUBLIC WORKS DEPARTMENT

ASPHALT CONCRETE BERMS

STANDARD DRAWING NO. 250

Sheet 1 of 1

R-1 ZONING

1. If sidewalk is sound (no cracks, etc.) and is not to be replaced delete 75 square feet from sidewalk area when issuing a permit for sidewalk and driveway approach.
2. If less than 25 square feet of sidewalk is sound (no cracks, etc.) replace existing sidewalk with 6" sidewalk.

OTHER THAN R-1 ZONING

Remove existing sidewalk and replace with 6" sidewalk.

ALL ZONING CONDITIONS

Cross hatched area – area covered by permit if there is no existing sidewalk.

R-1 ZONE ONLY

Shaded area – area covered by permit if existing sidewalk is sound.

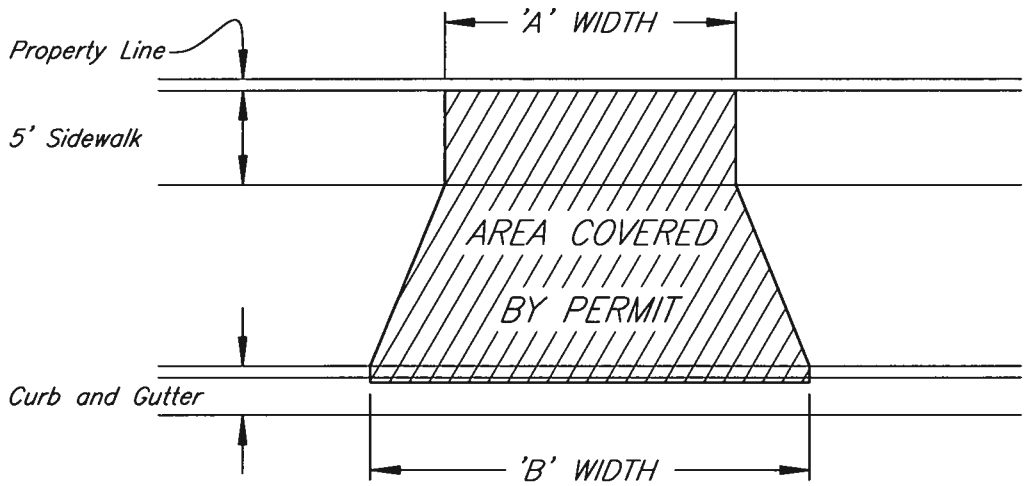

Zone		
Type		
Width	A	B
New S/W	Yes	No

APPROVED BY

CITY ENGINEER

5/18/11

DATE

MARK	REVISIONS	APPR.	DATE

CITY OF RIVERSIDE

PUBLIC WORKS DEPARTMENT

AREA COVERED BY PERMIT FOR DRIVEWAY APPROACH WITH PROPERTY LINE SIDEWALK

STANDARD DRAWING NO. 301

Sheet 1 of 2

R–1 ZONING

Delete 132 Sq. Ft. from sidewalk area when issuing a permit for both sidewalk and driveway approach.

OTHER THAN R–1 ZONING

Delete square footage for 'B' width from sidewalk area when issuing a permit for both sidewalk and driveway approach.

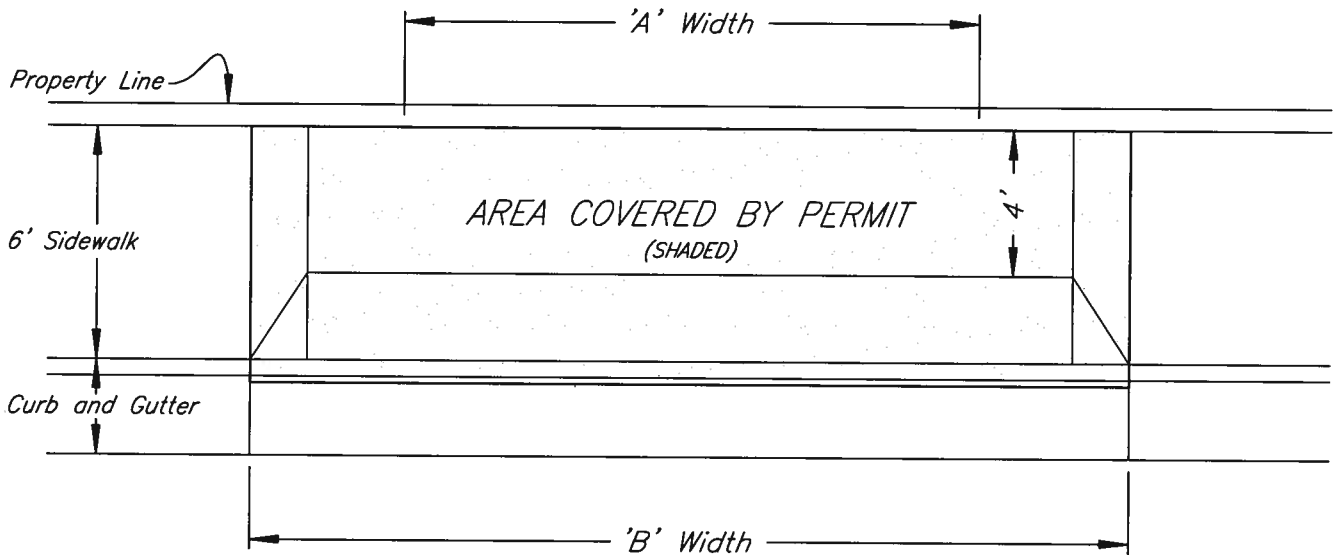

Zone		
Type		
Width	A	B
New S/W	Yes	No

APPROVED BY

CITY ENGINEER

5/18/11

DATE

MARK	REVISIONS	APPR.	DATE

CITY OF RIVERSIDE

PUBLIC WORKS DEPARTMENT

AREA COVERED BY PERMIT FOR DRIVEWAY APPROACH WITH CURB SIDEWALK

STANDARD DRAWING NO. 301

Sheet 2 of 2

DRIVEWAY APPROACH WITH PROPERTY-LINE SIDEWALK

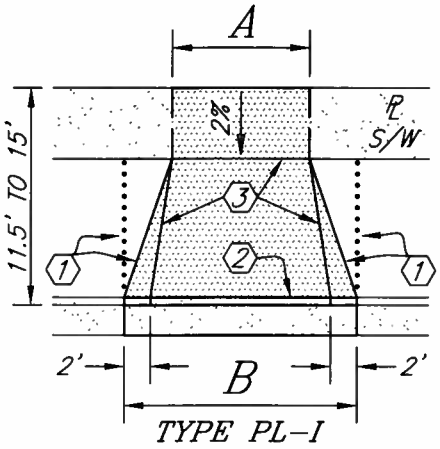

TYPE PL-I

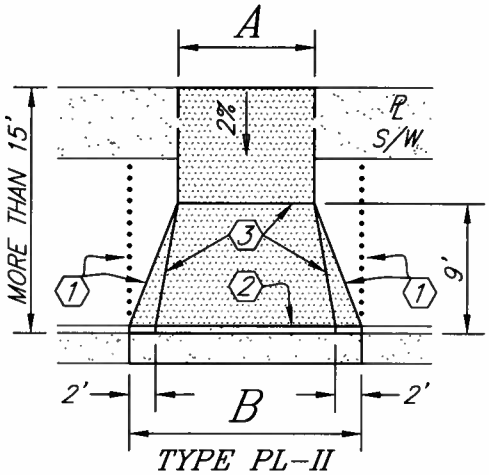

TYPE PL-II

DRIVEWAY APPROACH WITH CURB SIDEWALK

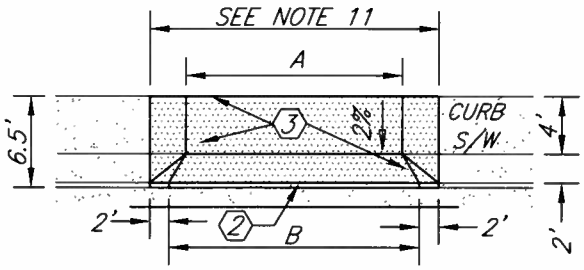

TYPE CURB-I

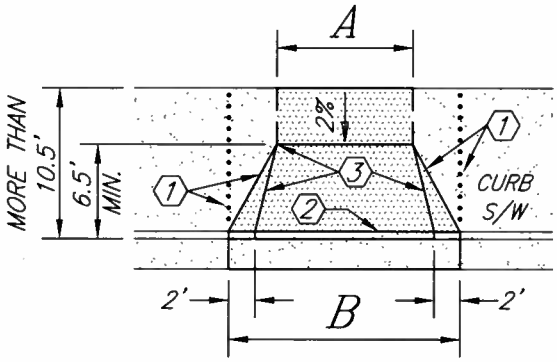

TYPE CURB-II

CONCRETE IN THE SHADED AREA SHALL BE AT LEAST 6" THICK.

(1) DOTTED LINE SHOWS OPTIONAL DRIVEWAY/SIDEWALK CONFIGURATION. WHEN THE OPTIONAL CONFIGURATION IS CHOSEN, THE ADDITIONAL CONCRETE SHALL BE AT LEAST 6" THICK.

(2) SCORE LINE OR COLD JOINT.

(3) GRADE BREAK LINES SHALL BE PRECISE AND STRAIGHT. SCREEDS AND/OR FALSE FORMS MUST BE USED TO ACHIEVE PRECISE CONSTRUCTION.

APPROVED BY

CITY ENGINEER — DATE 5/18/11

MARK	REVISIONS	APPR.	DATE

CITY OF RIVERSIDE

PUBLIC WORKS DEPARTMENT

DRIVEWAY APPROACH

STANDARD DRAWING NO. 302

Sheet 1 of 4

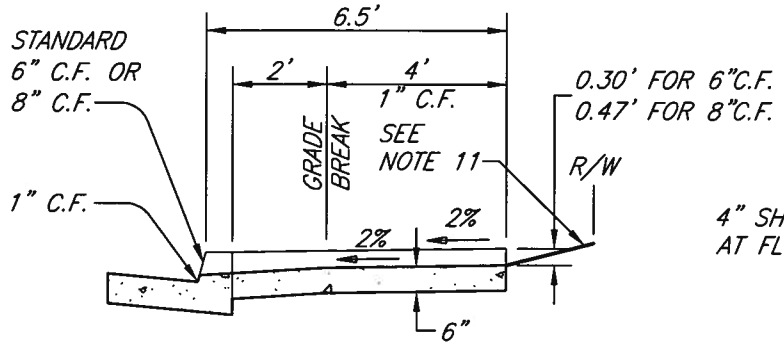

TYPE CURB–I

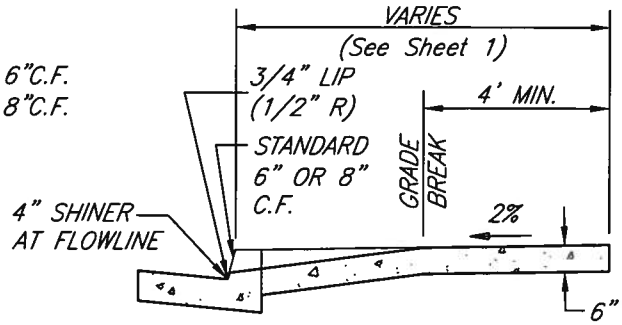

TYPES CURB–II, PL–I & PL–II

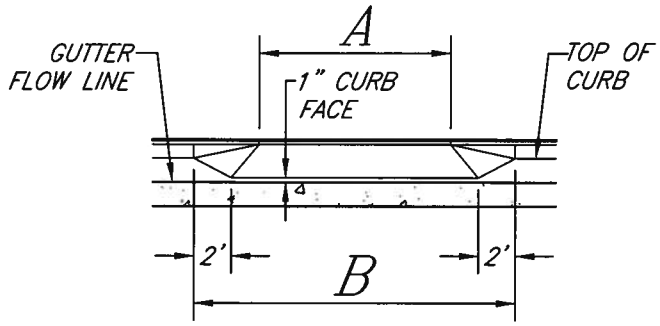

ELEVATION

DRIVEWAY APPROACH DIMENSIONS				
LAND USE AND DRIVEWAY TYPE		A	B	B*
RESIDENTIAL (SINGLE OR DUPLEX)	SINGLE GARAGE	10' (MIN.)	(A+7')	A+14'
	DOUBLE GARAGE	20' (MAX.)		
	TRIPLE GARAGE	28'		
COMMERCIAL OR APARTMENT		30'	A+14'	A+18'
COMMERCIAL (JOINT)		36'		

* USE THIS "B" DIMENSION WHEN THE DRIVEWAY APPROACH IS ON A MAJOR STREET OR WHEN A DRIVING LANE IS ADJACENT TO THE CURB.

APPROVED BY

CITY ENGINEER — DATE 5/18/11

MARK	REVISIONS	APPR.	DATE

CITY OF RIVERSIDE

PUBLIC WORKS DEPARTMENT

DRIVEWAY APPROACH

STANDARD DRAWING NO. 302

Sheet 2 of 4

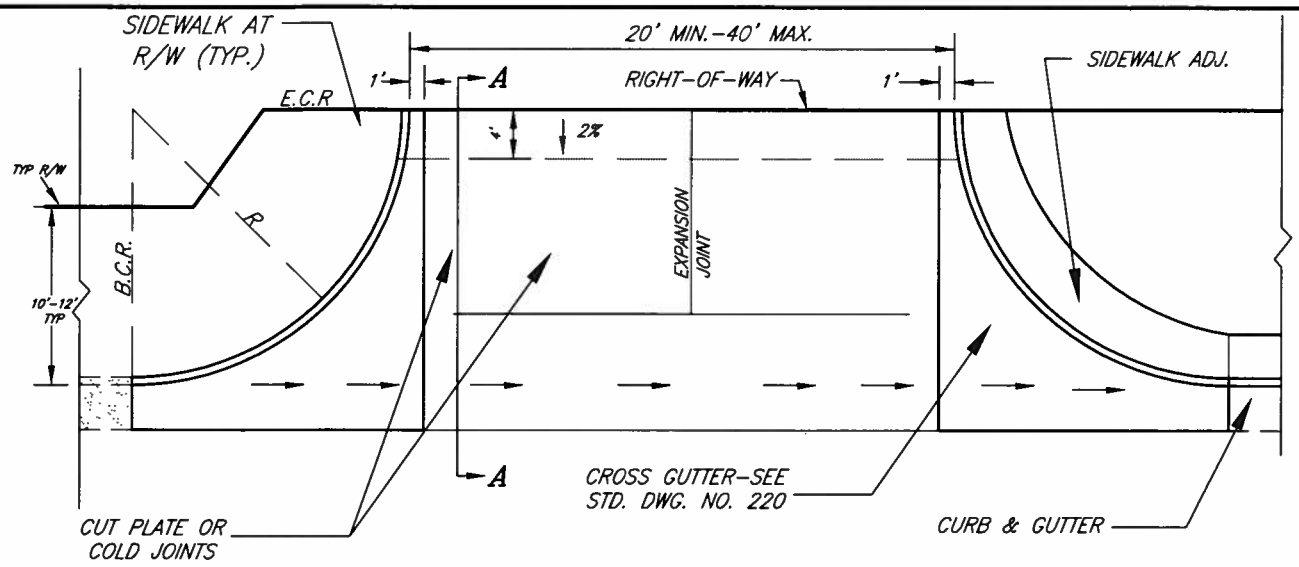

PLAN VIEW

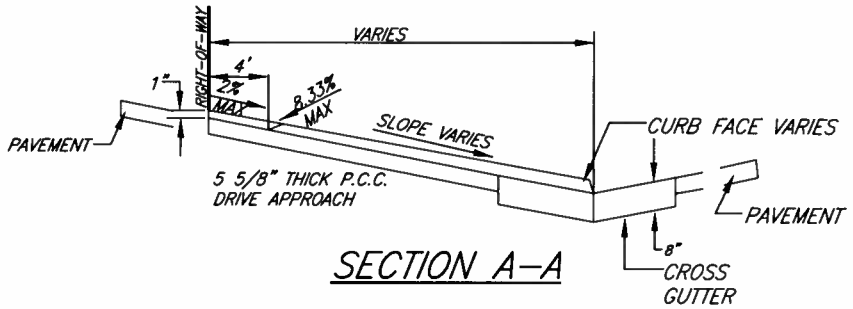

SECTION A-A

NOTES:

1. CURB RETURN RADII VARIES ACCORDING TO PARKWAY WIDTHS OR AS RECOMMENDED BY THE TRAFFIC ENGINEER.
2. SPECIAL DRIVE APPROACH SHALL BE USED FOR ALLEY ENTRANCE UNLESS OTHERWISE APPROVED BY THE CITY ENGINEER.
3. CONCRETE SHALL BE CLASS 560-C-3250 PER SECTION 201 OF THE STANDARD SPECIFICATIONS FOR PUBLIC WORKS CONSTRUCTION, CURED WITH TYPE 1-D CURING COMPOUND.
4. "R" DIMENSIONS SHALL BE ADEQUATE TO ACCOMMODATE TRUCK TURNING AS APPROVED BY CITY ENGINEER.
5. RIGHT OF WAY OR EASEMENT SHALL BE DEDICATED AS NECESSARY TO PROVIDE ADA ACCESS ACROSS DRIVEWAY.

APPROVED BY			
CITY ENGINEER		DATE 5/18/11	
MARK	REVISIONS	APPR.	DATE

CITY OF RIVERSIDE

PUBLIC WORKS DEPARTMENT

DRIVEWAY APPROACH

STANDARD DRAWING NO. 302

Sheet 3 of 4

NOTES

1. A CONSTRUCTION PERMIT IS REQUIRED PRIOR TO CONSTRUCTION OF A DRIVEWAY APPROACH. AS A PREREQUISITE TO THE CONSTRUCTION PERMIT, THE PERMITTEE SHALL SUBMIT FOR REVIEW AND APPROVAL OF THE CITY ENGINEER A DETAILED PLOT PLAN SHOWING THE LOCATION OF THE PROPERTY TO BE SERVED BY THE DRIVEWAY APPROACH, THE STREET RIGHT-OF-WAY, THE PROPERTY LINES, THE EXISTING AND PROPOSED GARAGES, DRIVEWAY, CURB AND GUTTERS, SIDEWALKS, TREES, FIRE HYDRANTS, UTILITY VAULTS AND POLES AND OTHER IMPROVEMENTS WHICH MAY BE AFFECTED BY THE PROPOSED CONSTRUCTION. THE PLOT PLAN SHALL SPECIFY THE TYPE AND LOCATION OF THE PROPOSED DRIVEWAY APPROACH WITH ITS DIMENSIONS "A" AND "B".

2. A DRIVEWAY APPROACH REQUIRING RELOCATION OR REMOVAL OF TREES, POLES, UTILITIES OR OTHER APPURTENANCES SHALL BE APPROVED BY THE AFFECTED UTILITY COMPANY AND/OR CITY DEPARTMENTS PRIOR TO ISSUANCE OF THE CONSTRUCTION PERMIT. ALL SUCH WORK SHALL BE DONE AT THE EXPENSE OF THE PERMITTEE.

3. NO PORTION OF A DRIVEWAY APPROACH SHALL BE LOCATED WITHIN A CURB RETURN.

4. ANY UNUSED DRIVEWAY OPENINGS SERVING THE PROPERTY ON WHICH A NEW DRIVEWAY IS BEING BUILT SHALL BE CLOSED WITH FULL HEIGHT CURB; SEE STD. DWG. 303 FOR REMOVAL OF CURB ONLY.

5. THE EDGE OF THE DRIVEWAY APPROACH AT THE CURB SHALL BE AT LEAST 5' FROM THE EXTENSION OF THE NEAREST PROPERTY LINE AT THE CURB.

6. WHEN A JOINT DRIVEWAY APPROACH IS PERMITTED, A RECORDED EASEMENT ALLOWING FOR MUTUAL ACCESS ON THE ADJOINING PROPERTIES IS REQUIRED.

7. CONCRETE SHALL BE CLASS 560-C-3250.

8. A CONSTRUCTION JOINT OR A WEAKENED PLANE JOINT SHALL BE INSTALLED BETWEEN THE DRIVEWAY APPROACH AND THE ADJACENT SIDEWALK AND DRIVEWAY.

9. A WEAKENED PLANE JOINT SHALL BE CONSTRUCTED THROUGH THE CENTER OF THE DRIVEWAY APPROACH WHEN "A" EXCEEDS 15'.

10. WHEN A DRIVEWAY APPROACH IS TO JOIN AN ALLEY, THE DRIVEWAY APPROACH AND THE ALLEY SHALL BE CONSTRUCTED TO ALLOW FOR PROPER DRAINAGE.

11. FOR TYPE CURB-1, A POSITIVE SLOPE BEYOND THE DRIVEWAY APPROACH AS WELL AS TRANSITION CURBS BEHIND THE SIDEWALK AND ADJACENT TO THE DRIVEWAY MAY BE REQUIRED TO CONTAIN 100-YEAR STORM RUNOFF WITHIN THE RIGHT-OF-WAY.

12. WHEN DRIVEWAY APPROACH IS TO BE USED AS A MIDBLOCK WHEELCHAIR RAMP USE STANDARD DRAWING 304, TYPE VII.

FOR ANY VARIATION FROM THIS STANDARD, APPROVAL MUST BE OBTAINED FROM THE CITY ENGINEER.

APPROVED BY

CITY ENGINEER — DATE 5/18/11

MARK	REVISIONS	APPR.	DATE

CITY OF RIVERSIDE

PUBLIC WORKS DEPARTMENT

DRIVEWAY APPROACH

STANDARD DRAWING NO. 302

Sheet 4 of 4

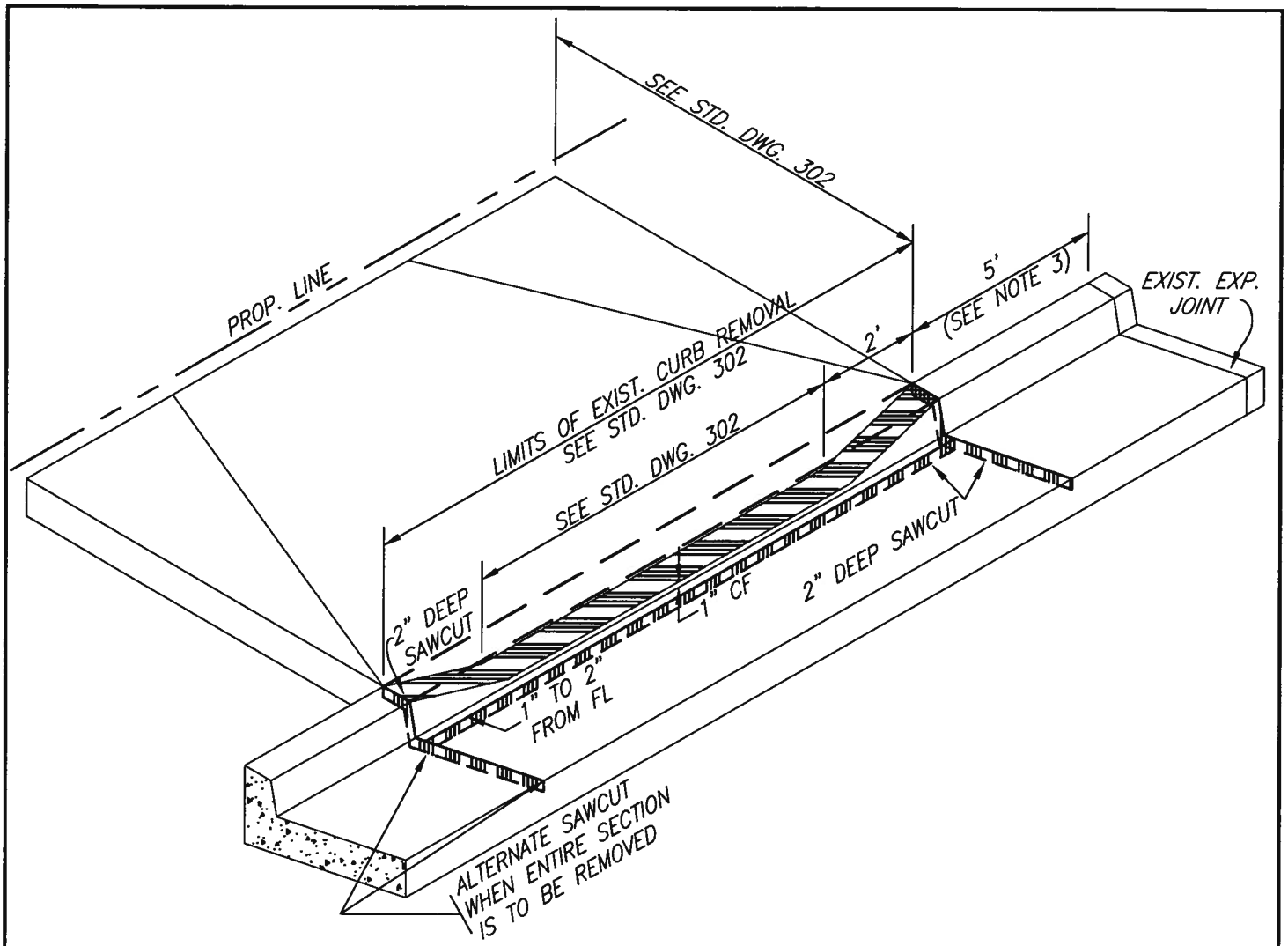

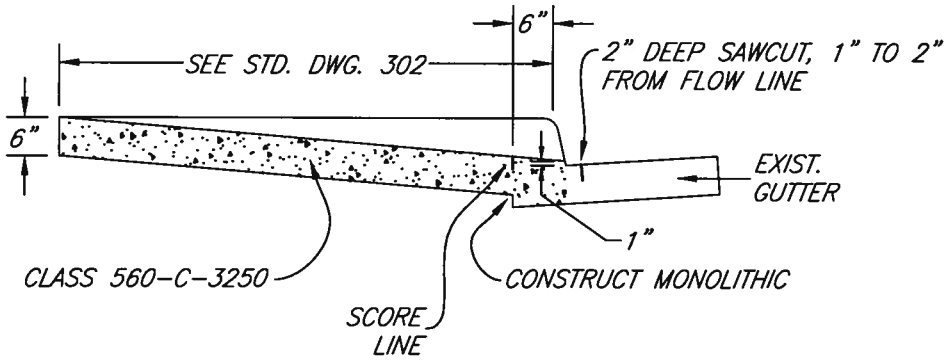

NOTES

1. CONTRACTOR IS RESPONSIBLE FOR REPAIR OF ADJACENT CURB AND GUTTER IF BROKEN DUE TO HIS OPERATIONS.
2. IF SAWCUT DOES NOT COMPLY WITH THIS STANDARD, CONTRACTOR SHALL REMOVE AND REPLACE ENTIRE CURB AND GUTTER AND SUFFICIENT ASPHALT TO ACCOMODATE THE FORMS.
3. IF REMOVAL OF ENTIRE CURB AND GUTTER IS REQUIRED, REMOVE TO NEAREST EXPANSION JOINT IF LESS THAN FIVE (5) FEET FROM BEGINNING OF DRIVEWAY. ANY GUTTER SECTION WHICH IS CRACKED AT A POINT THAT LEAVES LESS THAN FIVE (5) FEET TO THE NEAREST EXPANSION JOINT SHALL BE REMOVED AND REPLACED.
4. CURB CUTS WILL NOT BE ALLOWED IF EXISTING CURB IS CRACKED OR CHIPPED

APPROVED BY

CITY ENGINEER — DATE 5/18/11

MARK	REVISIONS	APPR.	DATE

CITY OF RIVERSIDE

PUBLIC WORKS DEPARTMENT

DRIVEWAY & CURB DEPRESSION

EXISTING CURB & GUTTER

STANDARD DRAWING NO. 303

Sheet 1 of 1

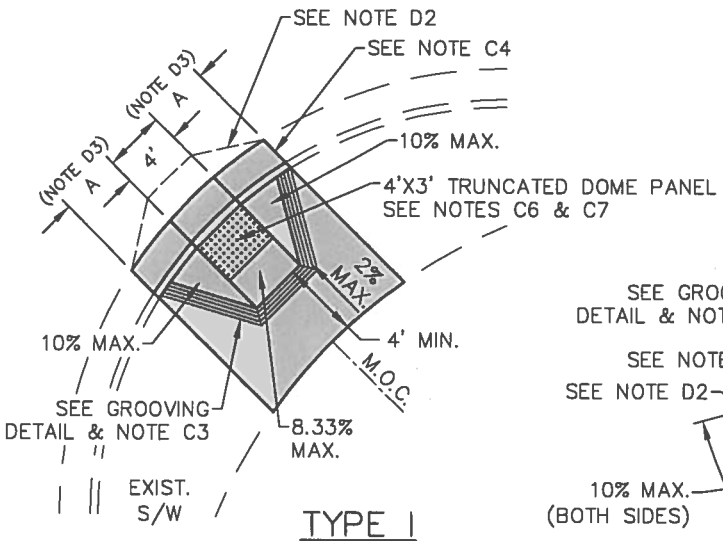

TYPE I

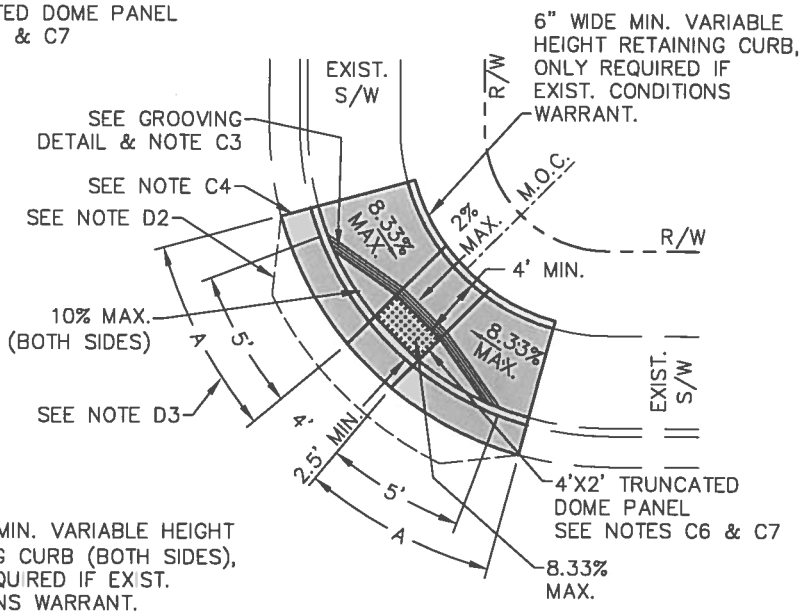

TYPE II

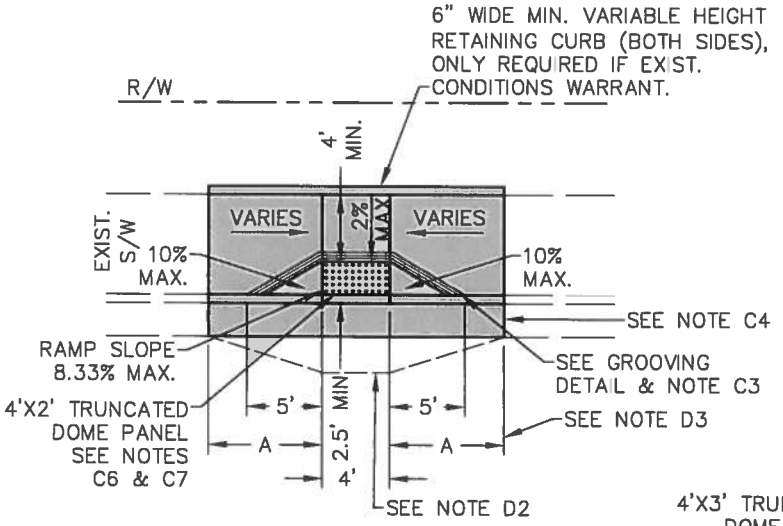

TYPE II–A – @ MID BLOCK
W/ CURB SIDE SW

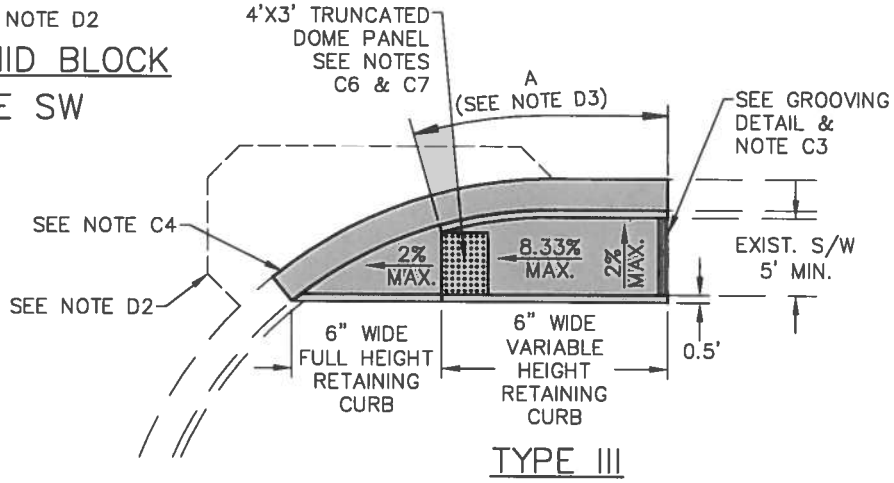

TYPE III

APPROVED BY

CITY ENGINEER — DATE 11/14/2014

MARK	REVISIONS	APPR.	DATE

CITY OF RIVERSIDE

PUBLIC WORKS DEPARTMENT

PEDESTRIAN RAMP

STANDARD DRAWING NO. 304

Sheet 1 of 4

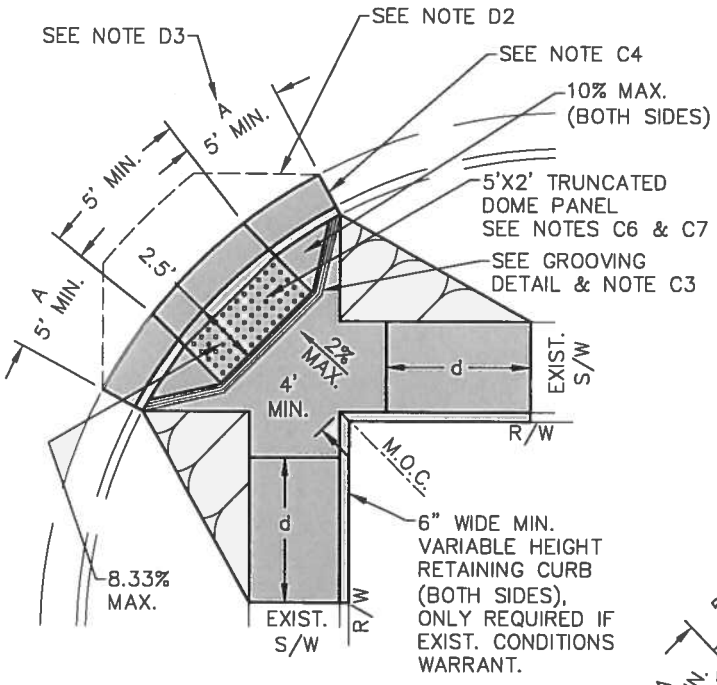

TYPE IV

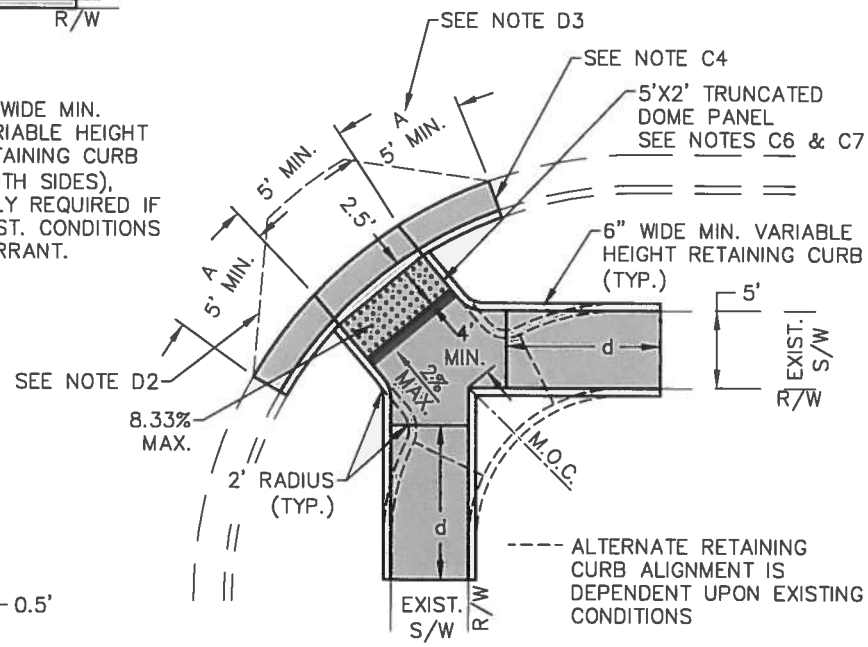

TYPE IV–A

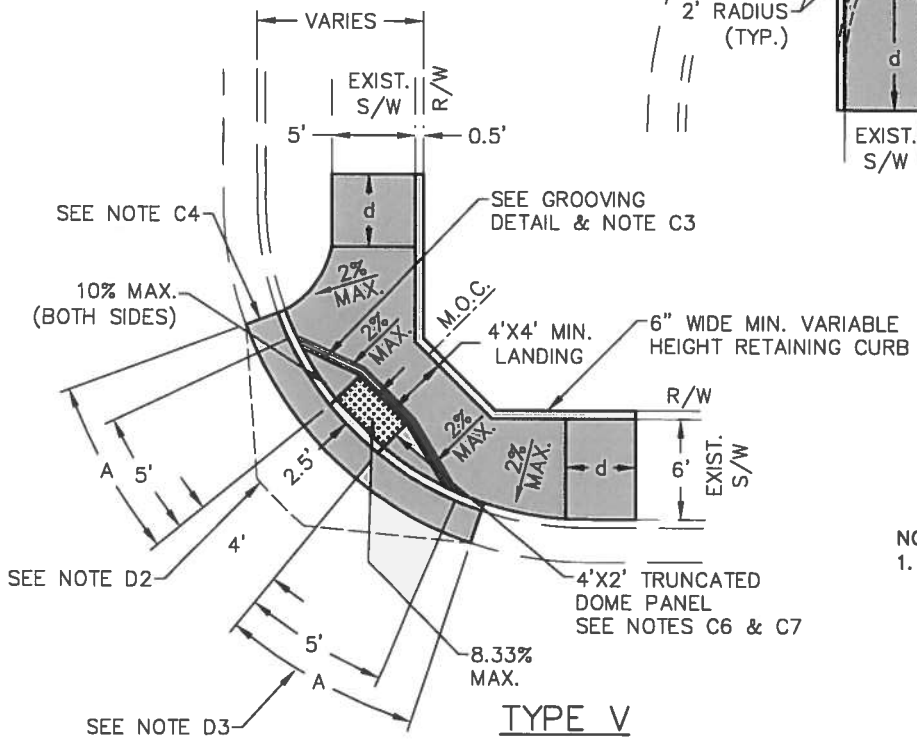

TYPE V

NOTE:
1. 5'≤d≤10' OR 8.33% MAX.

APPROVED BY

CITY ENGINEER — DATE 11/14/2014

MARK	REVISIONS	APPR.	DATE

CITY OF RIVERSIDE

PUBLIC WORKS DEPARTMENT

PEDESTRIAN RAMP

STANDARD DRAWING NO. 304

Sheet 2 of 4

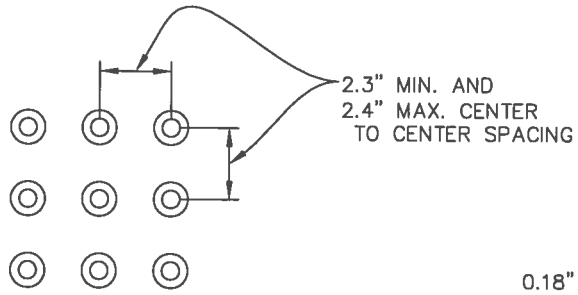

RAISED TRUNCATED DOME PATTERN

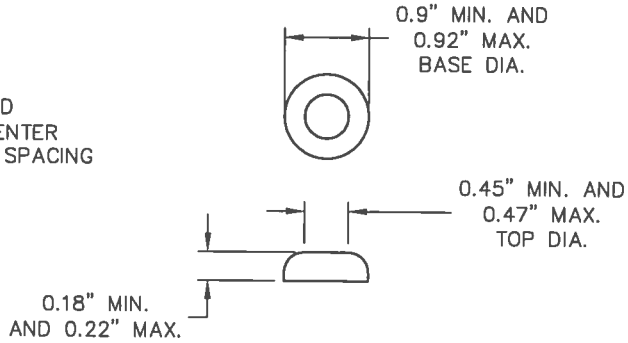

RAISED TRUNCATED DOME

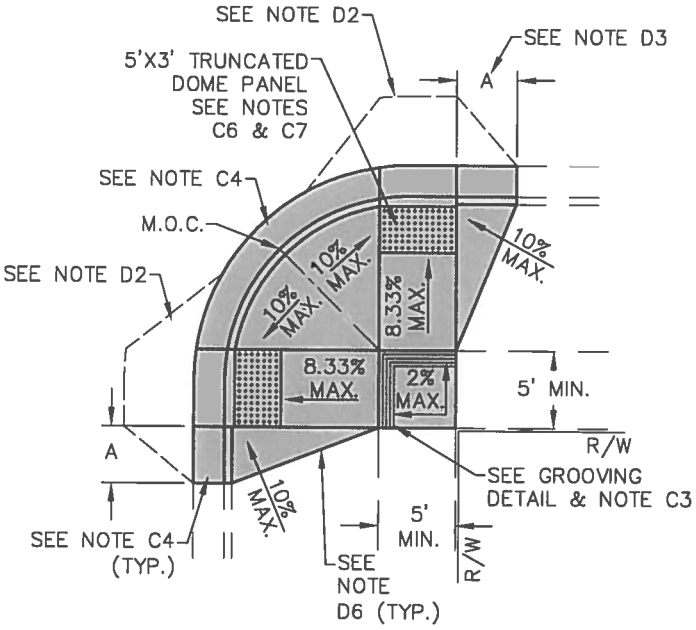

TYPE VI

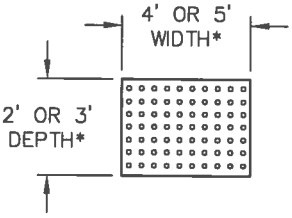

PANEL DIMENSIONS

NOTE: ONE SOLID PANEL SHALL BE INSTALLED (TILES WILL NOT BE ALLOWED)

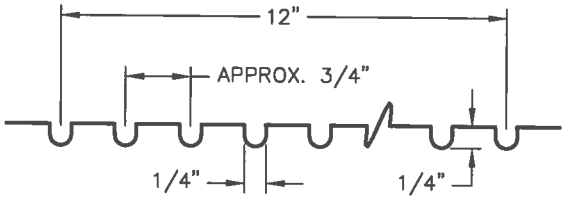

GROOVING DETAIL

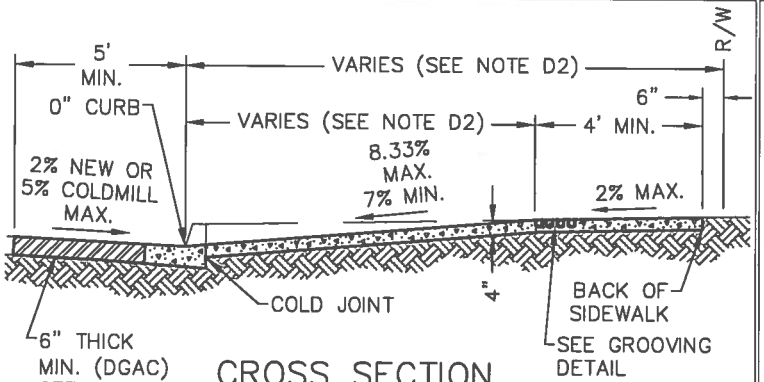

CROSS SECTION

TYPE I, III & VI

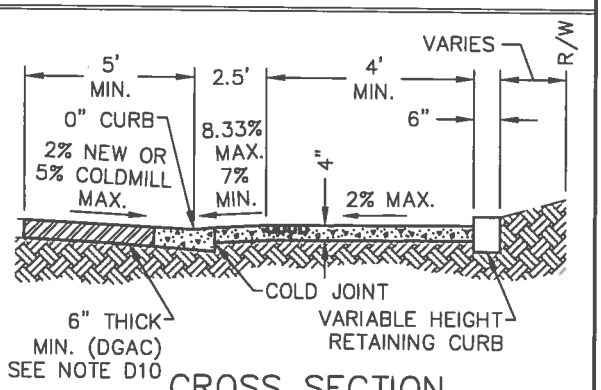

CROSS SECTION

TYPE II, II-A, IV, IV-A & V

APPROVED BY

CITY ENGINEER — DATE 11/14/2014

MARK	REVISIONS	APPR.	DATE

CITY OF RIVERSIDE

PUBLIC WORKS DEPARTMENT

PEDESTRIAN RAMP

STANDARD DRAWING NO. 304

Sheet 3 of 4

CONSTRUCTION NOTES:

C1. CONCRETE SHALL BE PER CURRENT EDITION OF THE "STANDARD SPECIFICATIONS FOR PUBLIC WORKS CONSTRUCTION." (560-C-3250)

C2. THE RAMP SHALL BE POURED MONOLITHICALLY WITH THE ADJACENT SIDEWALK AND ALSO POURED SEPARATE FROM THE CURB/GUTTER AND SPANDREL.

C3. THE RAMP SHALL HAVE A 12" WIDE BORDER WITH 1/4" GROOVES APPROXIMATELY 3/4" O.C. SEE GROOVING DETAIL, SHEET 3. THE SURFACE OF THE RAMP SHALL HAVE A TRANSVERSE BROOMED SURFACE TEXTURE ROUGHER THAN THE SURROUNDING SIDEWALK.

C4. GUTTER CROSS SLOPE SHALL BE TRANSITIONED FROM THE STANDARD OR EXISTING AT THE FULL HEIGHT CURB THROUGH THE 'A' DISTANCE TO 5% AT THE BOTTOM OF THE RAMP WHERE THE 0" CURB FACE.

C5. CROSSWALKS SHALL BE ALIGNED PER THE LATEST EDITION OF THE CALIFORNIA MUTCD. THE CHAMFER SHALL BE 4' FROM THE GUTTER FLOWLINE TO THE NEAREST EDGE OF THE 12" STRIPE.

C6. ALL RAMPS SHALL HAVE A YELLOW TRUNCATED DOME PANEL, THAT EXTENDS THE FULL WIDTH OF THE RAMP AND PER THE DEPTH INDICATED FOR EACH RAMP TYPE. SEE DETAIL, SHEET 3 OF 4. FOR NEW CONSTRUCTION, TRUNCATED DOMES SHALL BE SET IN WET CONCRETE (CAST-IN-PLACE TYPE).

C7. THE EDGE OF THE TRUNCATED DOME PANEL NEAREST THE STREET SHALL BE 6"-8" FROM THE GUTTER FLOWLINE.

C8. A MINIMUM OF 1 TO 2 EXISTING SIDEWALK PANELS ADJACENT TO NEW RAMPS SHALL BE REPLACED IF THE CROSSFALL EXCEEDS 2%.

DESIGN NOTES:

D1. TYPE I RAMP SHALL BE USED FOR ALL NEW CONSTRUCTION OR WHEREVER EXISTING CONDITIONS PERMIT. RAMP TYPES II THROUGH V ARE TO BE USED WHEREVER EXISTING CONDITIONS RESTRICT THE USE OF A TYPE I RAMP. VARIABLE HEIGHT RETAINING CURB SHALL BE USED ONLY ADJACENT TO NON-TRAVERSIBLE AREAS. ALL RAMP TYPES SHALL BE LOCATED AT THE MIDDLE OF THE CURB RETURN (M.O.C.) EXCEPT TYPE II-A, III AND VI.

D2. VARIABLE DEPTH COLDMILL AND DGAC OVERLAY AS NECESSARY TO ACHIEVE 5% MAX. GRADE AT LANDING. GRADE SHALL NOT EXCEED 14% BEYOND LANDING TO JOIN EXISTING.

D3. RAMP LENGTHS AND "A" DIMENSIONS SHALL BE ADJUSTED TO MEET THE SLOPE REQUIREMENTS AS SHOWN, EXCEPT THE "A" DIM. MUST NOT EXTEND BEYOND THE END OF THE CURB RETURN. (TYPE III & VI EXEMPT)

D4. RAMPS SHALL BE INSTALLED AT EACH CORNER OF AN INTERSECTION INCLUDING MIDBLOCK "T" LOCATIONS.

D5. RAMPS IN MID-BLOCK (AT "T" INTERSECTIONS) SHALL BE PLACED IN LINE WITH RAMPS ON THE OPPOSITE SIDE OF THE STREET. IF NO OPENING IS PROVIDED IN A MEDIAN (ON DIVIDED STREETS), THE RAMPS SHALL BE OMITTED IN THE MID-BLOCK LOCATION.

D6. WHERE THE GUTTER CAN BE RAISED TO THE TOP OF THE CURB (NO DRAINAGE IN THE RETURN AREA BECAUSE OF CATCH BASINS OR HIGH POINT IN GRADE) THE RAMP MAY BE ELIMINATED BY RAISING THE GUTTER GRADE AND DECREASING THE CURB FACE TO 0". THE 12" WIDE BORDER AS DESCRIBED IN NOTE C3 SHALL BE PLACED ALONG THE BACK OF CURB THROUGH THE WIDTH OF THE 0" CURB FACE.

D7. RAMPS SHALL BE LOCATED AS SHOWN ON SHEETS 1, 2 & 3 EXCEPT UNDER THE FOLLOWING:

(A) WHEN LOCATION CONFLICTS WITH EXISTING STORM DRAIN, TRAFFIC SIGNAL OR UTILITY FACILITIES, THE RAMP SHALL BE RELOCATED TO AN APPROPRIATE POSITION WITHIN OR ADJACENT TO THE CURB RETURN AREA AS APPROVED BY THE CITY ENGINEER. HOWEVER, IF THE RAMP CANNOT BE POSITIONED IN A SAFE LOCATION, THE CONFLICTING FACILITY IS TO BE RELOCATED.

(B) WHEN THE RAMP IS TO BE CONSTRUCTED IN A RETURN THAT IS DOWNSTREAM OF A CROSS GUTTER AND THE RAMP MAY CAUSE A DRAINAGE PROBLEM, THE RAMP SHALL BE RELOCATED TO AN APPROPRIATE AREA DOWNSTREAM OF THE M.O.C.

(C) IN EXISTING CURB RETURNS WITH RIGHT-OF-WAY LIMITATIONS, THE RAMP SHALL BE LOCATED WITHIN THE CURB RETURN AREA WHERE THE RIGHT-OF-WAY WIDTH IS SUFFICIENT.

D8. WHEELCHAIR RAMP WINGS OR RETAINING CURBS:

(A) WHERE ADJACENT AREAS ARE PAVED, WHEELCHAIR RAMP WINGS (10% SLOPE) SHALL BE INSTALLED.

(B) WHERE ADJACENT AREAS ARE LANDSCAPED OR RAMP CONSTRUCTION IS ADJACENT TO EXISTING FACILITIES (AS LISTED IN D7-A) VARIABLE HEIGHT RETAINING CURB SHALL BE INSTALLED.

D9. THE RAMP MUST BE LOCATED TO BE ALIGNED COMPLETELY WITHIN A STRIPED CROSSWALK.

APPROVED BY

CITY ENGINEER — DATE 11/14/2014

MARK	REVISIONS	APPR.	DATE

CITY OF RIVERSIDE

PUBLIC WORKS DEPARTMENT

PEDESTRIAN RAMP

STANDARD DRAWING NO. 304

Sheet 4 of 4

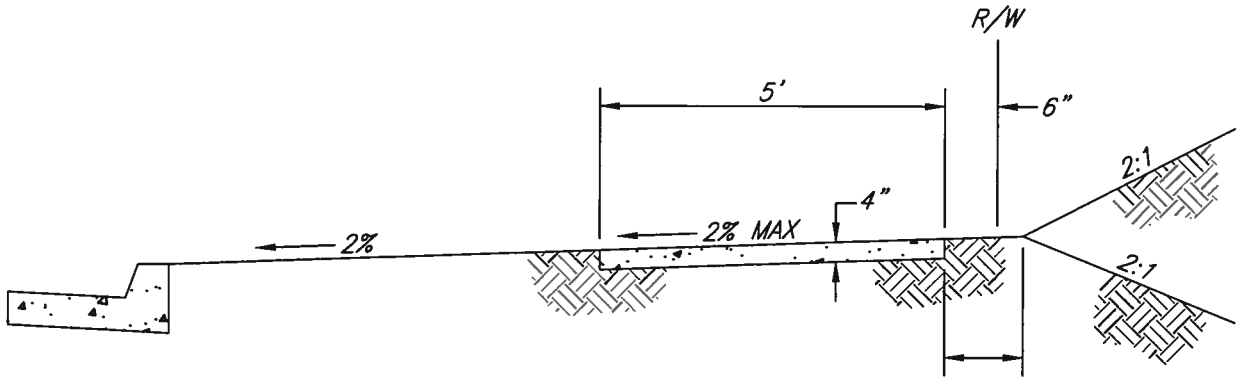

PROPERTY LINE SIDEWALK

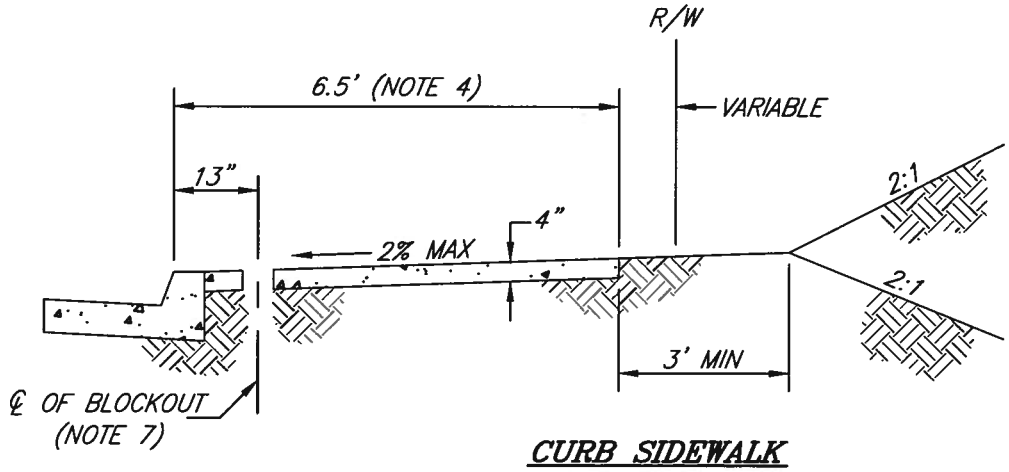

CURB SIDEWALK

TYPICAL SECTIONS

NOTES

1. CONCRETE SHALL BE PER CURRENT EDITION OF THE "STANDARD SPECIFICATIONS FOR PUBLIC WORKS CONSTRUCTION." (560-C-3250)
2. HALF INCH THICK TRANSVERSE EXPANSION JOINTS SHALL BE INSTALLED AT ALL CURB RETURNS. QUARTER INCH THICK EXPANSION JOINTS SHALL BE INSTALLED BETWEEN THE SIDEWALK AND THE BACK OF CURB AT CURB RETURNS AND AROUND DRAINAGE STRUCTURES, POLES, AND PIPES WHICH ARE IN THE SIDEWALK. CURB SIDEWALKS SHALL HAVE THE EXPANSION JOINTS AT THE SAME LOCATIONS AS THOSE IN THE CURB.
3. WEAKENED PLANE JOINTS SHALL BE CONSTRUCTED AT 10 FOOT MAXIMUM INTERVALS THROUGHOUT THE LENGTH OF THE SIDEWALK AND AT LOCATIONS WHERE THE SIDEWALK SECTION IS INTERRUPTED BY TREEWELLS, UTILITY VAULTS, BLOCKOUTS FOR STREET LIGHTS AND SIMILAR OBJECTS.
4. A SIDEWALK WIDER THAN 6.5 FEET MAY BE REQUIRED IN COMMERCIAL AREAS AND AREAS WITH HIGH PEDESTRIAN TRAFFIC.
5. FOR TYPICAL CURB RETURN SIDEWALK SEE STANDARD DRAWING NO. 120.
6. WHEN A STREET LIGHT STANDARD IS TO BE PLACED IN THE SIDEWALK, BLOCK OUT A THREE FOOT SQUARE AROUND THE STANDARD AND BRING THE STREET LIGHT FOUNDATION TO GRADE AFTER THE STANDARD IS PLUMB.
7. IN RESIDENTIAL AREAS 6" X 6" OR 6" DIAMETER BLOCKOUTS FOR MAILBOXES ARE REQUIRED IN CURB SIDEWALK 13" FROM CURB FACE AT THE PROPERT LINE BETWEEN ADJACENT RESIDENCES. FOR MAILBOXES FOR BUSINESS, MOBILEHOME PARKS OR APARTMENT HOUSES, DEVELOPER TO CHECK WITH U.S.P.S. FOR THE NUMBER AND LOCATION OF MAILBOXES.
8. 4 FEET WIDTH OF SIDEWALK IS THE MINIMUM WIDTH BETWEEN EDGE OF SIDEWALK AND ANY OBJECTS THAT INTERFERE WITH PEDESTRIAN R/W (TREEWELLS, FIRE HYDRANTS, ETC.).

APPROVED BY

CITY ENGINEER — **DATE** 5/18/11

MARK	REVISIONS	APPR.	DATE

CITY OF RIVERSIDE

PUBLIC WORKS DEPARTMENT

SIDEWALK

STANDARD DRAWING NO. 325

Sheet 1 of 1

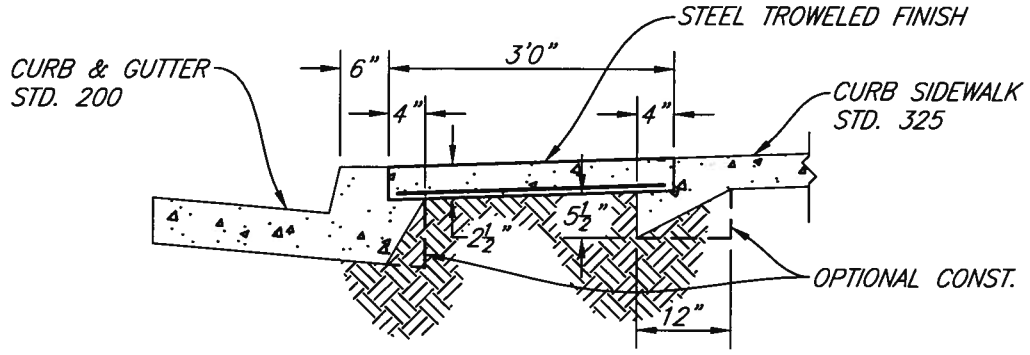

SECTION A–A
NEW CURB GUTTER AND SIDEWALK

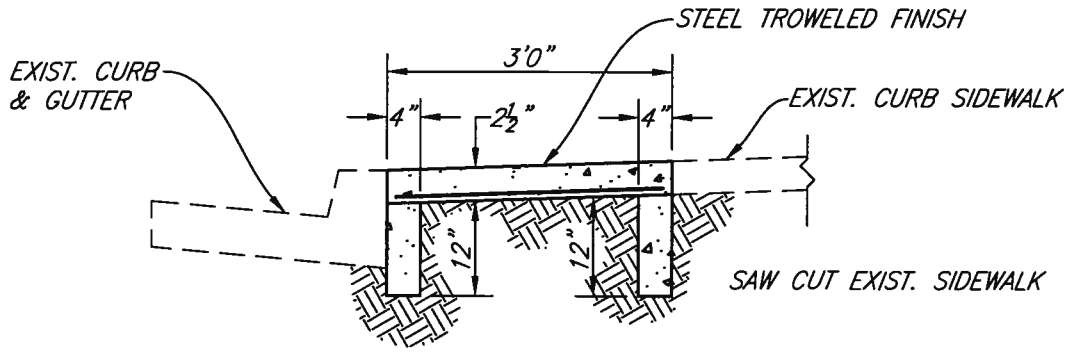

SECTION A–A
EXIST. CURB GUTTER AND SIDEWALK
SCALE 1"=2'

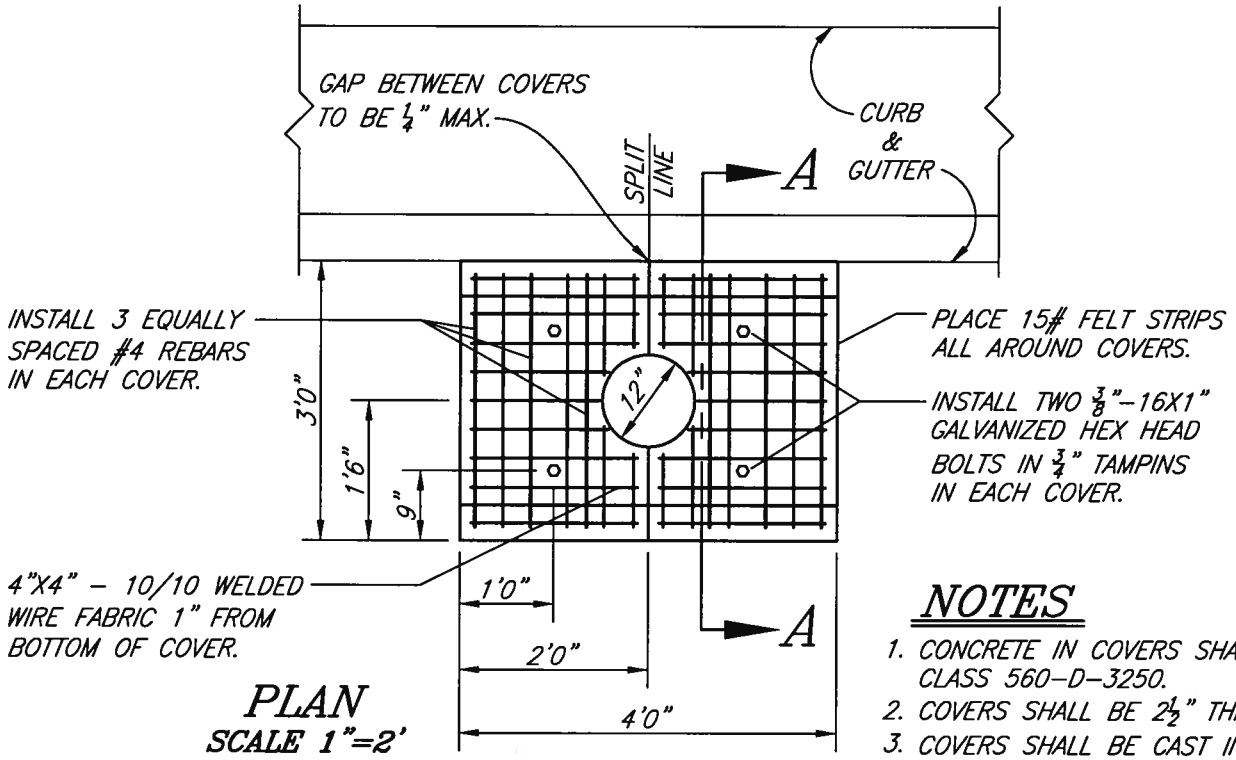

PLAN
SCALE 1"=2'

NOTES

1. CONCRETE IN COVERS SHALL BE CLASS 560–D–3250.
2. COVERS SHALL BE 2½" THICK.
3. COVERS SHALL BE CAST IN PLACE.

APPROVED BY

CITY ENGINEER — **DATE** 5/18/11

MARK	REVISIONS	APPR.	DATE

CITY OF RIVERSIDE
PUBLIC WORKS DEPARTMENT

TREE WELL AND COVERS

STANDARD DRAWING NO. 326

Sheet 1 of 1

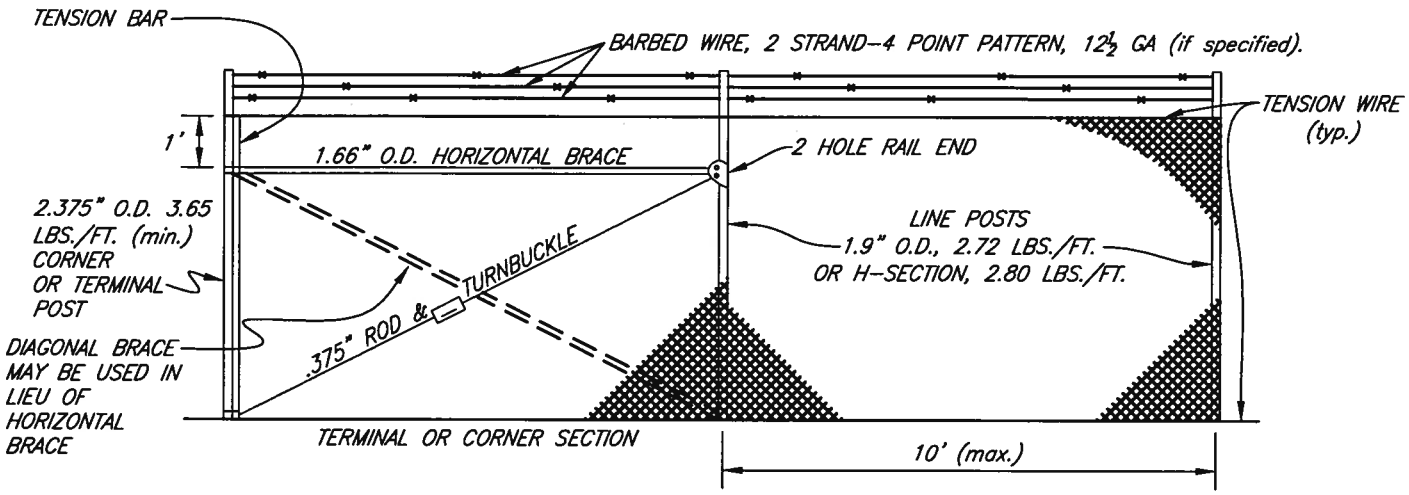

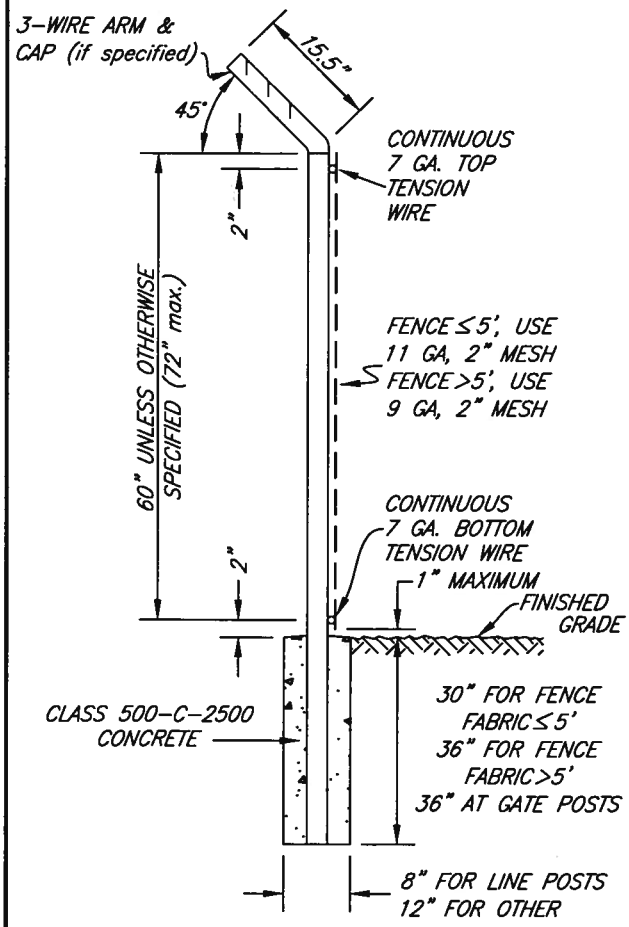

POST DETAIL

NOTES

1. All parts of the fence to be galvanized per Std Specifications for Public Works Construction.
2. Corner posts, 1.625" braces, and .375" rods and turnbuckle to be installed at corners of 30° deflection or greater.
3. Line posts to be double braced and turnbuckled every 500' in straight sections of fence (See sheet 2 of 2).
4. Braces to be 1.25" pipe, 2.27 lbs/ft – extending from corner, gate, or terminal posts to first adjacent line post, and securely fastened to posts with pressed steel connections, then trussed with .375" diameter round rod and turnbuckled.
5. Top and bottom tension wires to be securely fastened to all posts and tied to fabric at 24" spaces.
6. The ground surface shall be filled and compacted to within 1" of bottom of fabric.
7. Mesh fabric to be tied per Std Specifications for Public Works Construction.
8. Line posts to have 45° arm and cap carrying 3 strands of galvanized barbed wire of 4 point pattern, each composed of 2 strands of 12½ GA wire if required.
9. For repair of damaged zinc coatings, see Std. Specifications for Public Works Construction.
10. When constructing a double gate, use horizontal braces on each side of the gates.
11. Top and bottom tension wires shall be fastened securely and terminated to line posts at each 500' bracing interval.

APPROVED BY

CITY ENGINEER — DATE 5/18/11

MARK	REVISIONS	APPR.	DATE

CITY OF RIVERSIDE

PUBLIC WORKS DEPARTMENT

CHAIN LINK FENCE

(FOR FENCES UP TO 72" HIGH)

STANDARD DRAWING NO. 380

Sheet 1 of 2

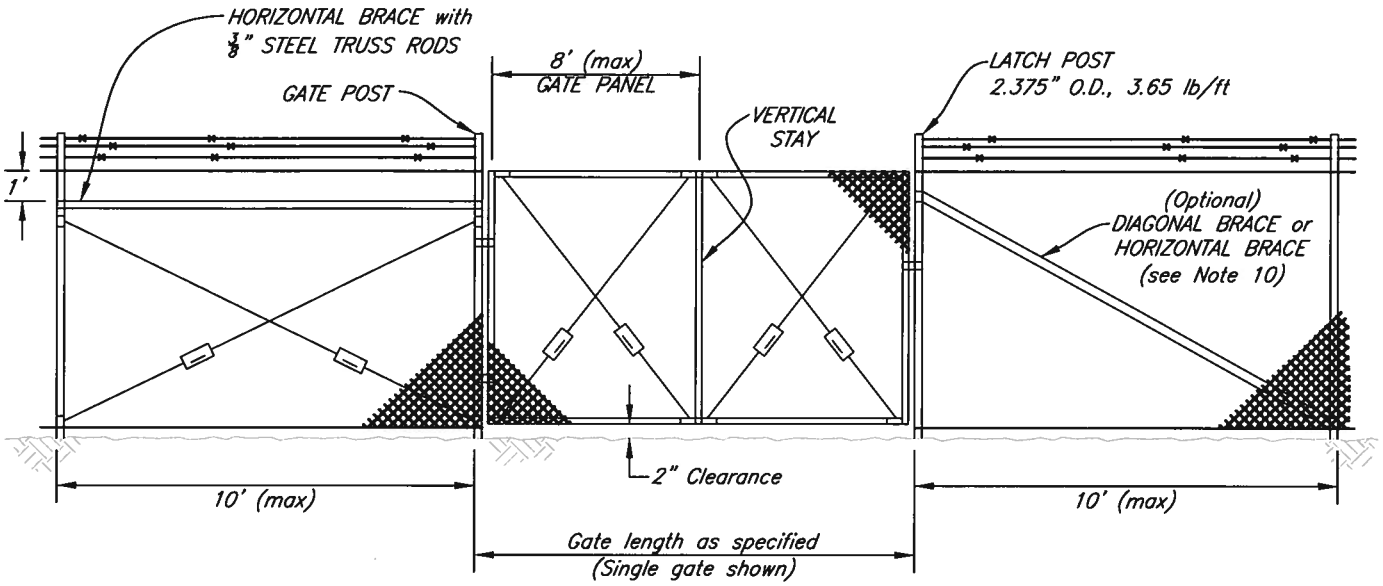

GATE DETAIL

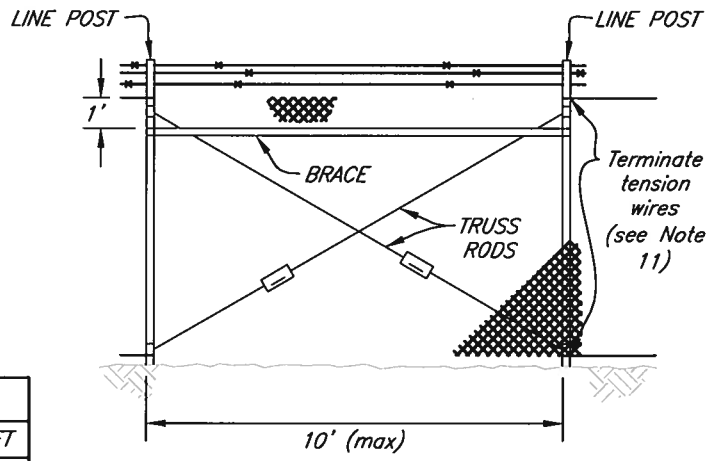

Line posts at 500' maximum intervals, braced and trussed in both directions. See Note 11 for tension wire termination.

LINE POST BRACING DETAIL

GATES			
FRAME	OPENING	POST O.D.	POST WT/FT
1.9" O.D.	SINGLE TO 6' OR DBL. TO 12' INCL.	2.375"	3.65 lbs.
1.9" O.D.	SGL., OVER 6' TO 13' OR DOUBLE, OVER 12' TO 26' INCL.	4.000"	9.11 lbs.
1.9" O.D.	SINGLE, OVER 13' TO 18' OR DBL., OVER 26' TO 36' INCL.	6.625"	18.97 lbs.
1.9" O.D.	SGL., OVER 18' OR DOUBLE, OVER 36'	8.625"	24.70 lbs.

NOTE: Above dimensions and weights are minimum.
Larger sizes may be used on approval of engineer.

APPROVED BY
CITY ENGINEER
5/18/11
DATE

MARK	REVISIONS	APPR.	DATE

CITY OF RIVERSIDE

PUBLIC WORKS DEPARTMENT

CHAIN LINK FENCE

(FOR FENCES UP TO 72" HIGH)

STANDARD DRAWING NO. 380

Sheet 2 of 2

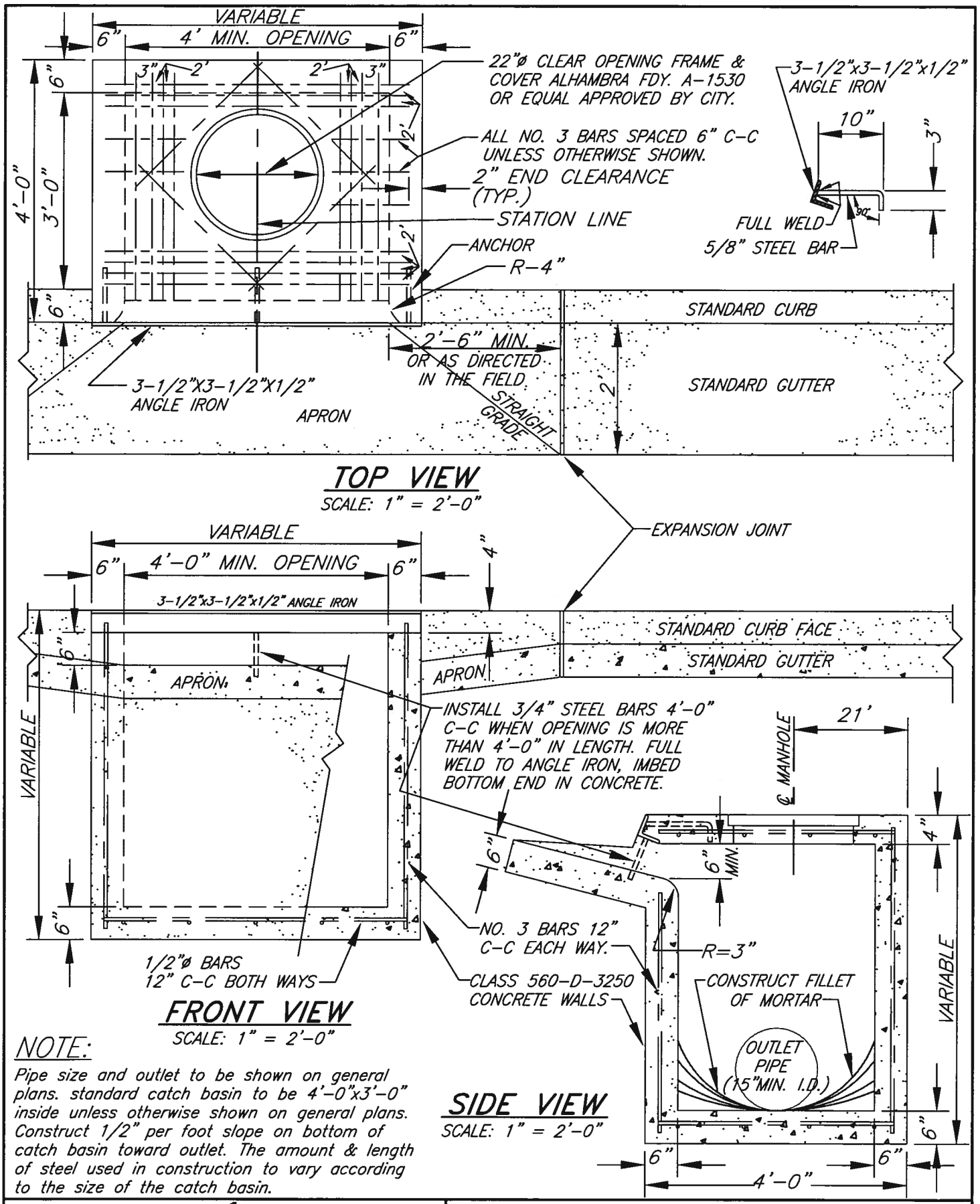

NOTE:

Pipe size and outlet to be shown on general plans. standard catch basin to be 4'-0"x3'-0" inside unless otherwise shown on general plans. Construct 1/2" per foot slope on bottom of catch basin toward outlet. The amount & length of steel used in construction to vary according to the size of the catch basin.

APPROVED BY

CITY ENGINEER **DATE** 5/18/11

MARK	REVISIONS	APPR.	DATE

CITY OF RIVERSIDE

PUBLIC WORKS DEPARTMENT

STORM WATER CATCH BASIN TYPE 1

STANDARD DRAWING NO. 400

Sheet 1 of 1

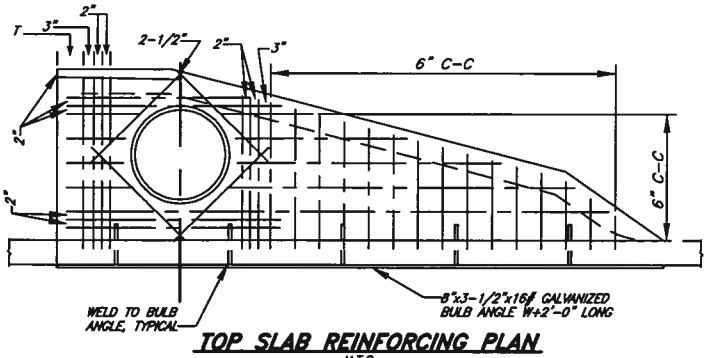

TOP SLAB REINFORCING PLAN
N.T.S.

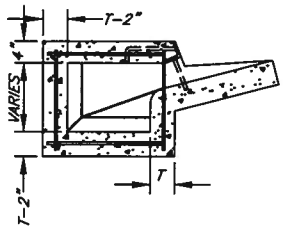

SECTION X-X
N.T.S.

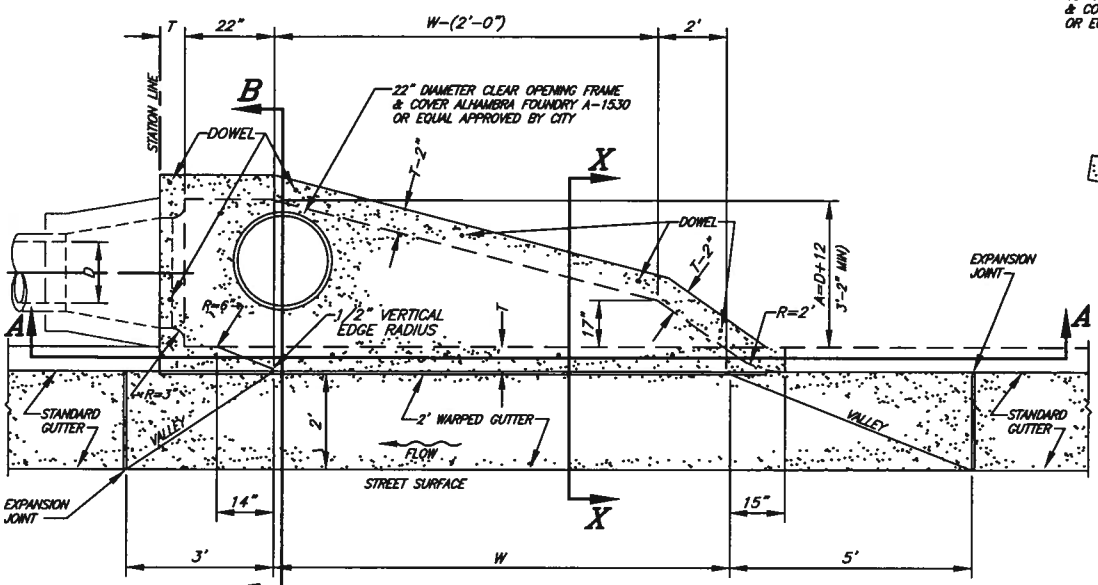

PLAN VIEW
N.T.S.

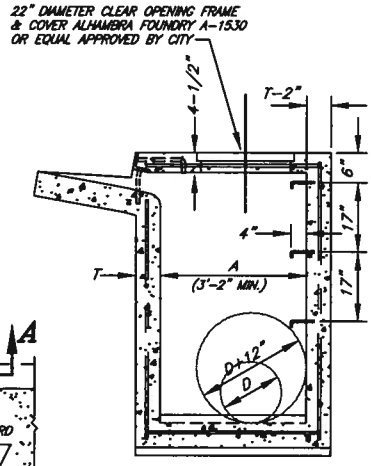

SECTION B-B
N.T.S.

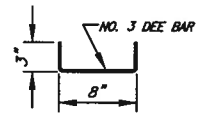

DETAIL OF DOWEL
N.T.S.
TO BE USED WHEN TOP IS POURED SEPARATE, AS INDICATED

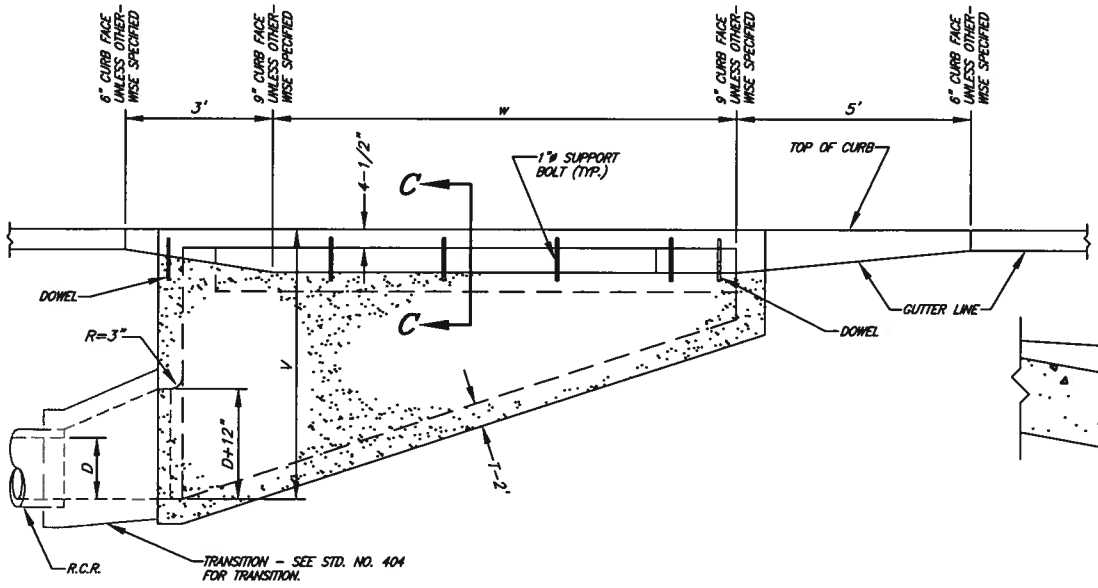

SECTION A-A
N.T.S.

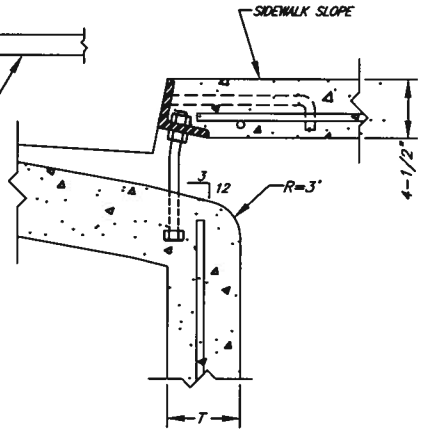

SECTION C-C
N.T.S.
REFERENCE -STD. DWG. NO. 402

APPROVED BY			
CITY ENGINEER		DATE 5/18/11	
MARK	REVISIONS	APPR.	DATE

CITY OF RIVERSIDE

PUBLIC WORKS DEPARTMENT

STORM WATER CATCH BASIN TYPE 2

STANDARD DRAWING NO. 401

Sheet 1 of 2

DIMENSIONS: T = 8 inches if V is less than 8 feet.
T = 10 inches if v is 8 feet or more.
V = 5.25 feet unless otherwise specified.
W = as specified on the plan (8 foot min.)
D = As specified on plan (15 inch min.)
A = D plus 12 inches (38 inches min.)

CONCRETE: Concrete shall be Class 560-C-3250.

REINFORCING STEEL: Shall be No. 3 bars unless otherwise spedified. Clearance shall be 1-1/2" from bottom of slab.

Steps: 3/4 inch plain around galvanized steel steps with drop step (17 inches apart) required when V is greater than 4 feet 6 inches. The top step shall be 6 inches below the surface and shall be 2-1/2 inches from the wall. Only one step (12 inches from bottom) if V is 4 feet 6 inches or less. Step shall be anchored not less than 4 inches in wall of basin.

SUPPORT BOLT: For details see Standard Drawing No. 402.

TRANSITION: For details see Standard Drawing No. 404.

FLOOR: Of basin shall be given a steel trowel finish and shall slope from all directions to the outlet.

SURFACE: Of all exposed concrete shall conform in slope, grade, color, finish and scoring to existing or proposed curb and walk adjacent to the basin.

CURVATURE: Of the lip and sidewalls at gutter openings shall be formed by curved forms and shall not be made by plastering.

MANHOLE: Shall be place along black wall near outlet.

OUTLET: Pipe shall be trimmed to the final shape and length before concrete is poured.

APPROVED BY
CITY ENGINEER — DATE 5/18/11

MARK	REVISIONS	APPR.	DATE

CITY OF RIVERSIDE
PUBLIC WORKS DEPARTMENT

STORM WATER CATCH BASIN TYPE 2

STANDARD DRAWING NO. 401

Sheet 2 of 2

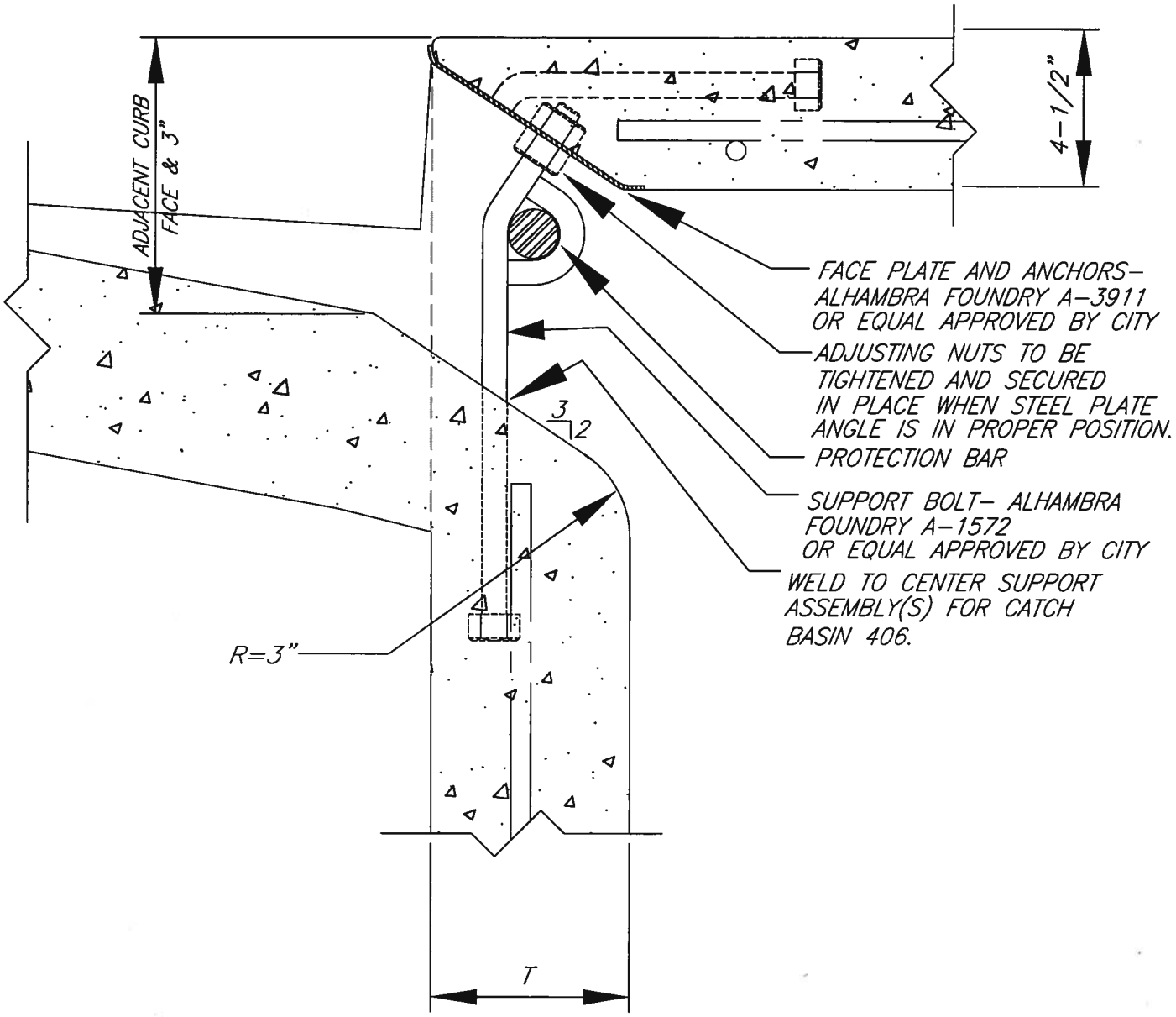

1. Face plate shall be embedded 4" in adjacent curb on each side of opening.
2. Protection bar shall be 1" diameter plain steel. Embed 5" at each end. Center in opening when support bolts are not used.
3. Support bolts are required if width of opening exceeds 5'. Maximum spacing of bolts is 4'.
4. All exposed metal parts shall be galvanized.

APPROVED BY
CITY ENGINEER
5/18/11
DATE

MARK	REVISIONS	APPR.	DATE

CITY OF RIVERSIDE
PUBLIC WORKS DEPARTMENT

CATCH BASIN INLET

STANDARD DRAWING NO. 402

Sheet 1 of 1

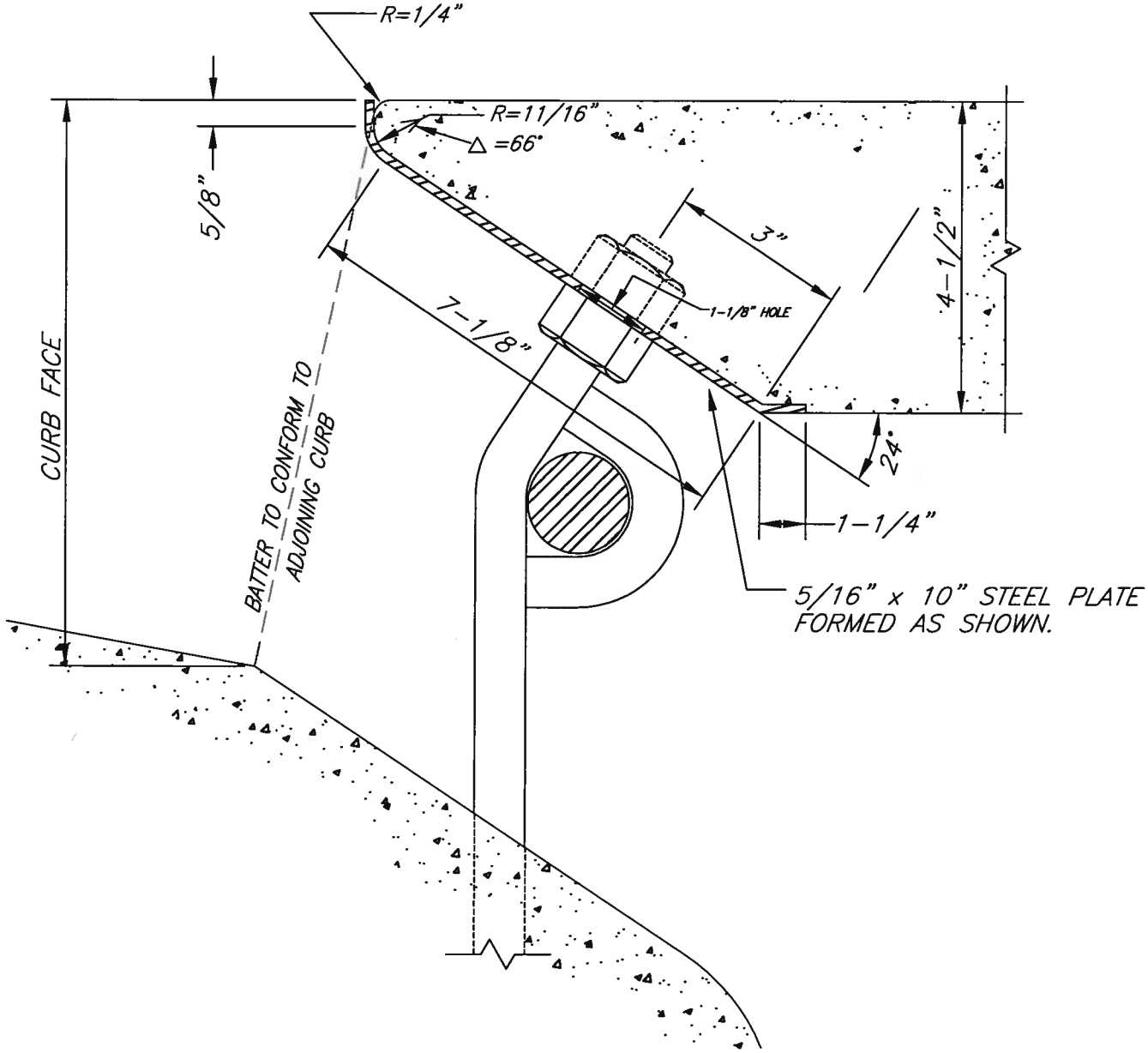

NOTES:

1. THE STEEL PLATE ALTERNATE FOR CATCH BASIN INLETS SHALL BE FABRICATED FROM 5'16" x 10" UNIVERSAL MILL PLATES. THIS PLATE MAY BE USED AT THE CONTRACTORS OPTION IN LIEU OF THE 8" x 3-1/2" x 16" BULB ANGLE.
2. FOR ANCHORAGE AND OTHER DETAILS SEE STD. NO. 402.
3. ALL EXPOSED METAL PARTS SHALL BE GALVANIZED.

APPROVED BY

CITY ENGINEER — DATE 5/18/11

MARK	REVISIONS	APPR.	DATE

CITY OF RIVERSIDE

PUBLIC WORKS DEPARTMENT

CATCH BASIN INLET
STEEL PLATE ALTERNATE

STANDARD DRAWING NO. 403

Sheet 1 of 1

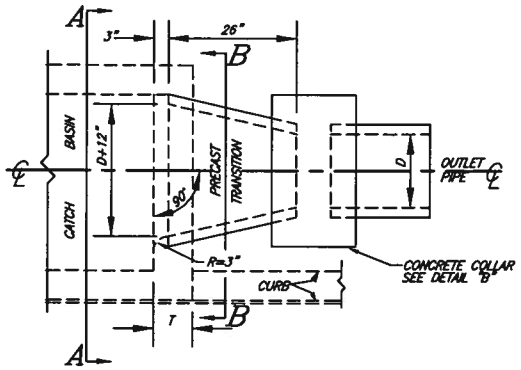

PLAN VIEW

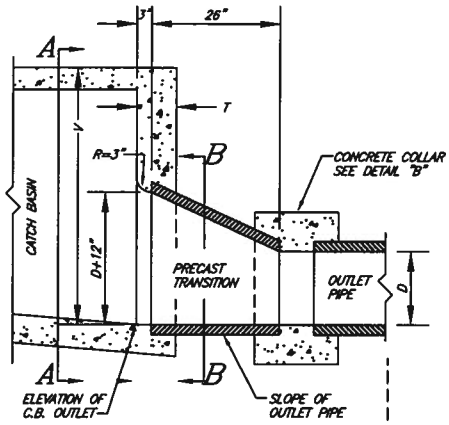

℄ PROFILE

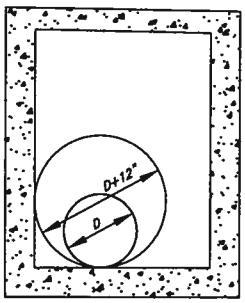

SECTION A–A

CASE – 1

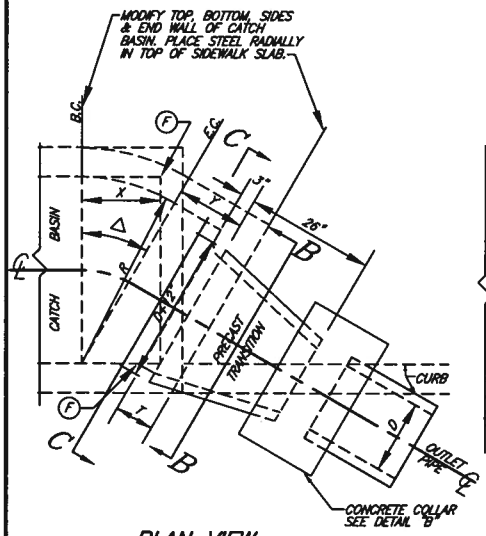

PLAN VIEW

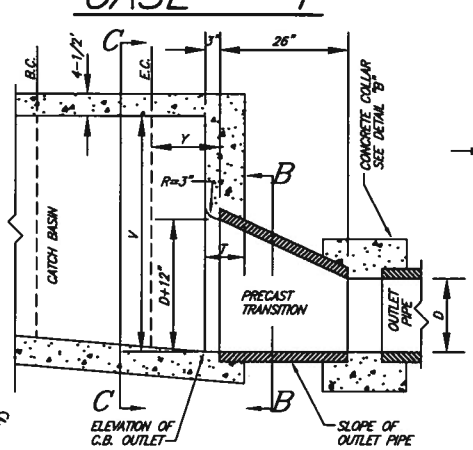

℄ PROFILE

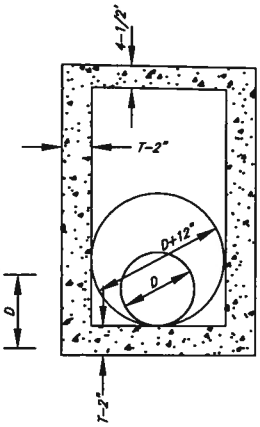

SECTION C–C

TABLE – A

D	Δ	R	X	Y
15"–18"	30°	38"	16"	13-7/8"
15"–18"	45°	38"	11-3/8"	8"
21"	30°	38"	10"	8-5/8"
21"	45°	38"	7-1/8"	5"
24"	30°	38"	4"	3-1/2"
24"	45°	38"	2-7/8"	2"
27" OR MORE	30°	D+12"	0"	0"
	45°	D+12"	0"	0"

CASE – 2

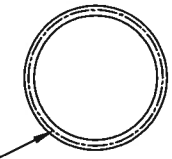

PRECAST TRANSITION SHALL BE REINFORCED FOR (1250–D) FOR D + 12" R.C.P.

SECTION B–B

TABLE – B

D	15"	18"	21"	24"	27"	30"
G	7"	7"	7"	17-1/2"	8"	8"

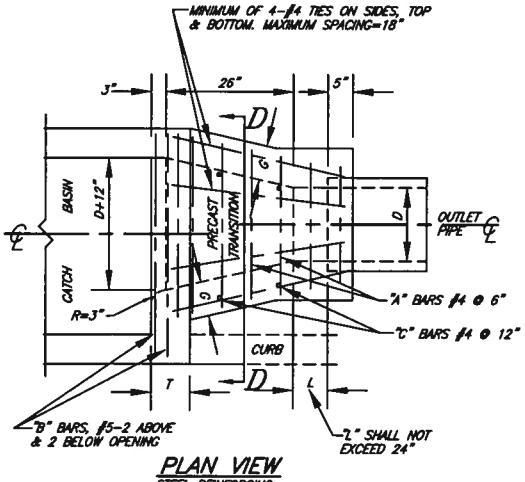

PLAN VIEW
STEEL REINFORCING

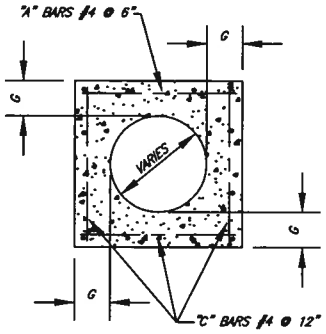

SECTION D–D

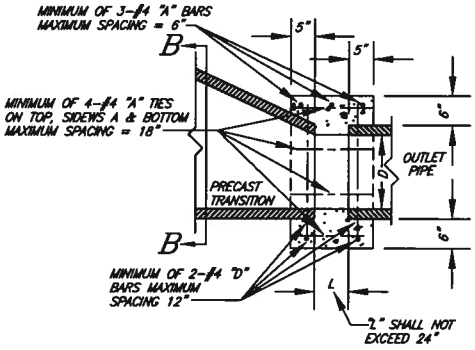

DETAIL – A
MONOLITHIC TRANSITION
(SEE NOTE – 1)

DETAIL – B
SQUARE CONCRETE COLLAR

APPROVED BY
CITY ENGINEER — DATE 5/18/11

MARK	REVISIONS	APPR.	DATE

CITY OF RIVERSIDE

PUBLIC WORKS DEPARTMENT

CATCH BASIN OUTLET TRANSITION STRUCTURE

STANDARD DRAWING NO. 404

Sheet 1 of 2

NOTES FOR CATCH BASIN INLET TRANSITION STRUCTURE

1. TRANSITION – May be either precast (SectionB–B) or monolithic (Section D–D) at Contractor's option.

2. PRECAST TRANSITION – Shall be reinforced for 1250–D for D+12 inch concrete pipe.

3. CONCRETE COLLAR – (Detail "B") shall be used only to join the precast transition with the outlet pipe.

4. CONCRETE – Shall be of the same class as the structure with which it is poured.

5. CURVATURE – of the rounded edge of the outlet and sidewalls shall be formed by curved forms and shall not be made by plastering.

6. INTERIOR SURFACE – of structure shall be smooth and clean, and free from pockets or protuberances.

7. SURFACE – of all exposed concrete shall conform in slope, grade, color, finish, and scoring to existing or proposed curb and walk adjacent to the basin.

8. DIMENSIONS – T, V, and steel reinforcement details are shown either on Std. Drawing No. 401, Sheet 2 or on the improvement plan for the catch basin.

9. OUTLET PIPE – shall be trimmed to final shape and length before concrete is poured.

10. REINFORCING STEEL – shall be 1–1/2" clear form face of concrete unless otherwise shown.

11. TRANSITION STRUCTURE – (Case 2) may be constructed in any direction within the limits of table "A" as specified on the improvement plan, by rotating it about either points "E" or "F".

APPROVED BY

CITY ENGINEER — DATE 5/18/11

MARK	REVISIONS	APPR.	DATE

CITY OF RIVERSIDE

PUBLIC WORKS DEPARTMENT

CATCH BASIN OUTLET TRANSITION STRUCTURE

STANDARD DRAWING NO. 404

Sheet 2 of 2

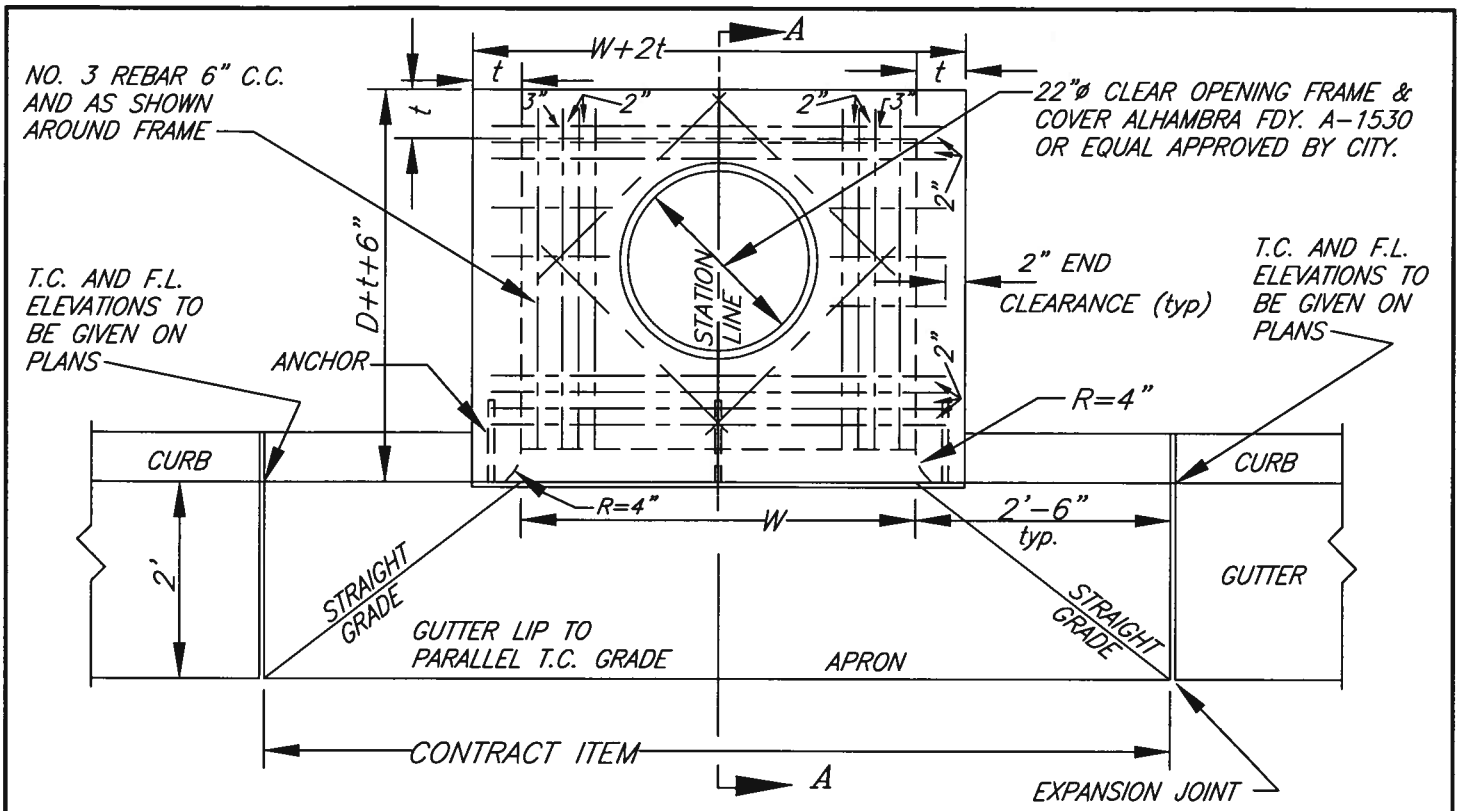

TOP VIEW

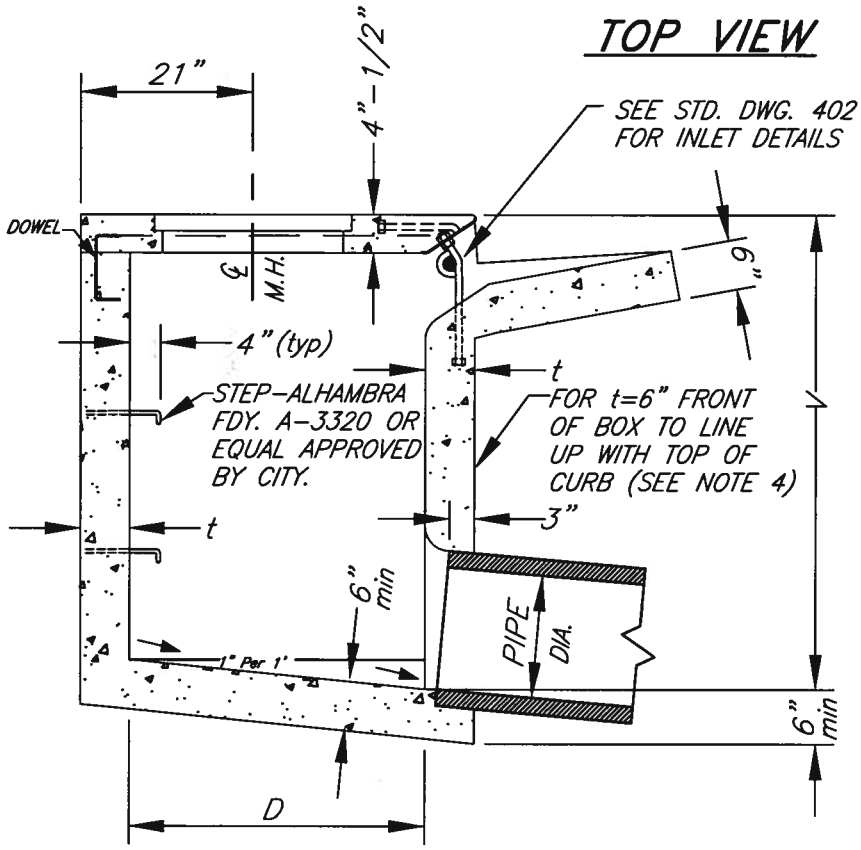

SECTION A-A

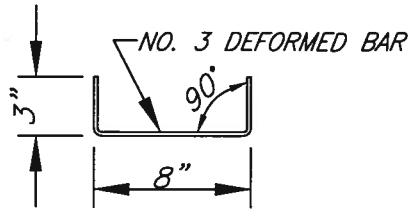

DOWEL DETAIL

TO BE USED WHEN TOP IS POURED SEPARATE, ONE AT EACH CORNER

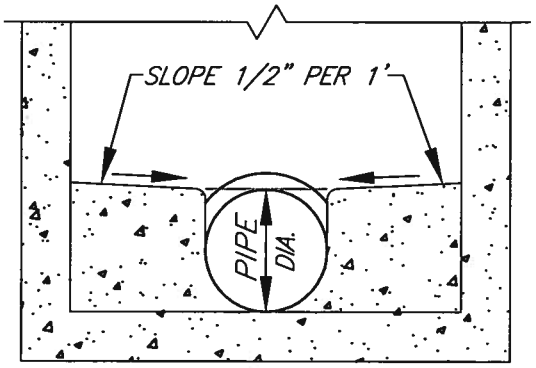

CHANNEL DETAIL

APPROVED BY			
CITY ENGINEER		DATE 5/18/11	
MARK	REVISIONS	APPR.	DATE

CITY OF RIVERSIDE

PUBLIC WORKS DEPARTMENT

CATCH BASIN

STANDARD DRAWING NO. 405

Sheet 1 of 2

NOTES:

1. CONCRETE shall be 560-C-3250 Portland Cement Concrete.

2. CONNECTOR PIPE shall be horizontally centered on the wall of the catch basin which faces the connector pipe.

3. CURVATURE of the lip and sidewall at the opening shall be formed by curved forms and shall not be made by plastering.

4. DIMENSIONS:
   W shall be as specified on the plan (4' min.).
   V shall be as specified on the plan.
   D = 3' unless otherwise specified on the plan.
   t = 6" if V is 4' or less.
   t = 8" if V is between 4' and 8'.
   t = 10" if V is 8' or more.
   Thickness of the wall under the opening shall be t + 2" when W exceeds 7'-0".
   t > 6", widening of wall shall be on street side.

5. CHANNEL shall be constructed in catch basins having inlet pipes. Where V minus shelf height is less than 2-1/2' the channel may be omitted.

6. STEP SPACING
   If V is 3.5' or less, no steps are required.
   If V is more than 3.5' and not more than 4', install one step 12" above the floor.
   If V is more than 4', install steps 12" apart with the top step 20" to 24" below the top surface of the basin.
   When the basin has a channel use V minus shelf height to determine step spacing.

7. PIPES shall be trimmed to the final shape and length before concrete is poured.

8. SURFACE of all exposed concrete in basin shall conform in slope, grade, color, finish and scoring to the existing or proposed curb and walk adjacent to the basin and shall be free from protruding wires and nails. Floor of channel shall be given a steel-troweled finish.

9. TOP OF BASIN shall slope 2% toward curb except when otherwise shown on the plan or to fit existing sidewalk. To be poured monolithic with S/W if curb S/W is used.

10 FRAME AND COVER shall be located as shown on sheet 1 unless otherwise shown on the plan.

APPROVED BY
CITY ENGINEER — DATE 5/18/11

MARK	REVISIONS	APPR.	DATE

CITY OF RIVERSIDE
PUBLIC WORKS DEPARTMENT

CATCH BASIN

STANDARD DRAWING NO. 405
Sheet 2 of 2

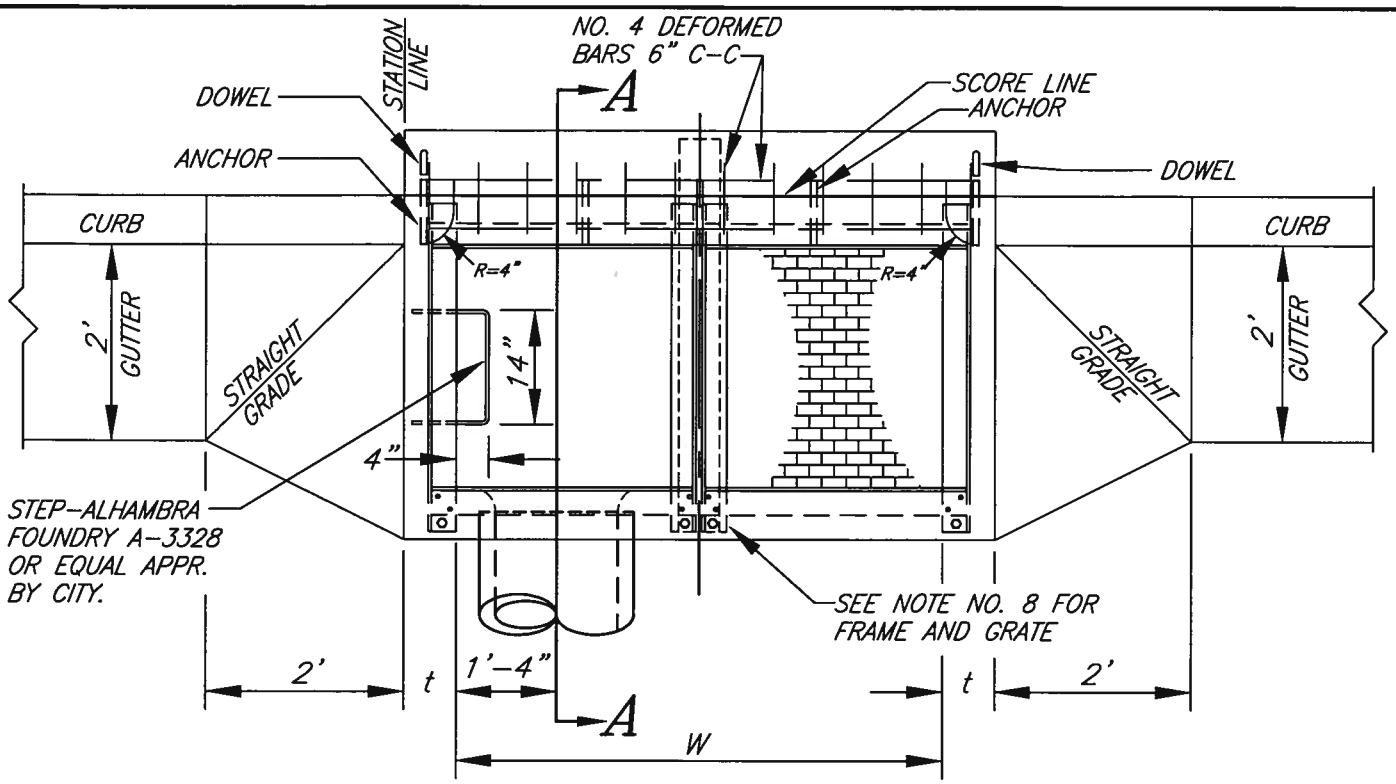

PLAN VIEW

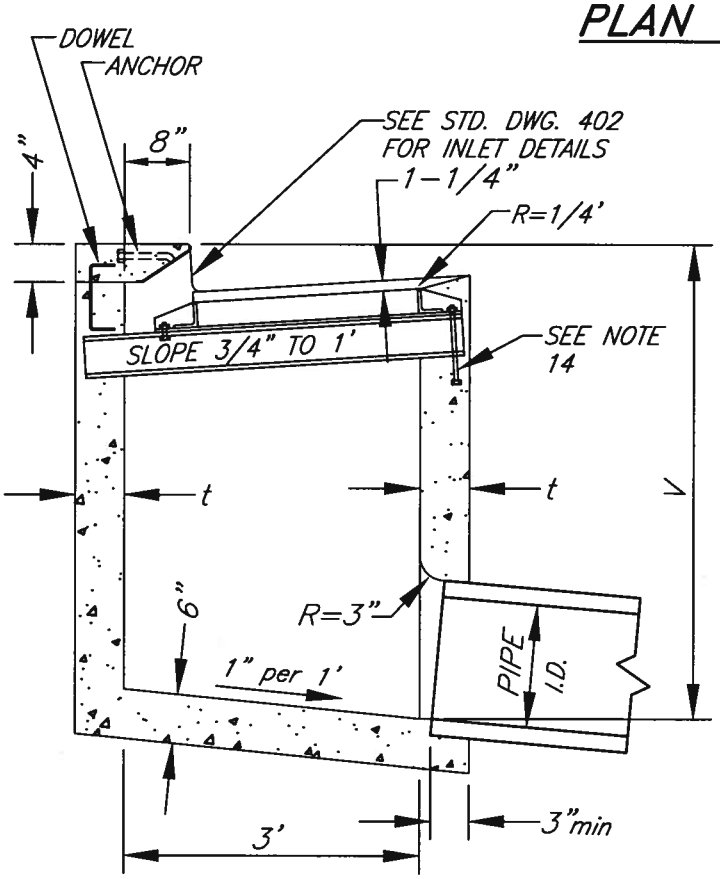

SECTION A-A

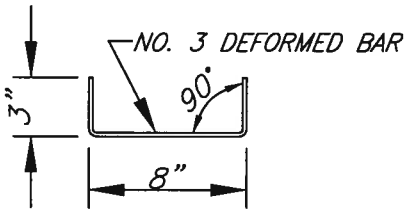

DETAIL OF DOWEL

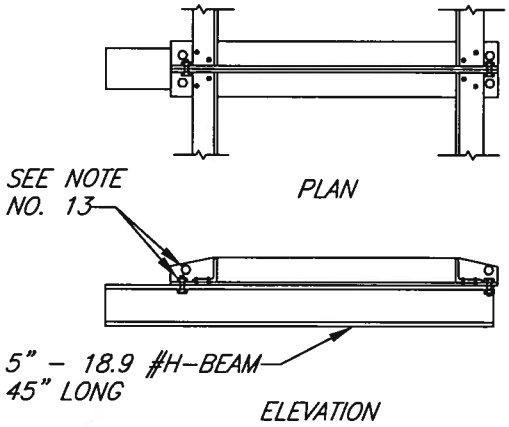

CENTER SUPPORT DETAIL

APPROVED BY			
CITY ENGINEER		DATE	5/18/11
MARK	REVISIONS	APPR.	DATE

CITY OF RIVERSIDE

PUBLIC WORKS DEPARTMENT

CATCH BASIN

STANDARD DRAWING NO. 406

Sheet 1 of 2

NOTES:

1. CONCRETE shall be 560-C-3250 Portland Cement Concrete.

2. BASIN shall have one grating unless otherwise specified on plans.

3. CURVATURE of the end-walls at the curb opening shall be formed by curved forms and shall not be made by plastering.

4. DIMENSIONS:
   t = 6" if V is 4' or less
   t = 8" if V is between 4' and 8'
   t = 10" if V is 8' or more
   V shall be as specified on plans
   W = 2' 11-3/8" for one grating. Add 3' 5-3/8" per additional grating.

5. PIPES shall be trimmed to the final shape and length before concrete is poured.

6. Channel shall be constructed in catch basins having inlet pipes. Were V minus shelf height is less than 2-1/2' the channel may be omitted. See Standard Drawing No. 405 for channel detail.

7. SURFACE of all exposed concrete in basin shall conform in slope, grade, color, finish and scoring to existing or proposed curb and walk adjacent to the basin and shall be free from protruding wires and nails. Floor of channel shall be given a steel-troweled finish.

8. FRAME shall be Alhambra Foundry A-1540 or equal approved by city; grate shall be A-1546 or equal approved by city.

9. TOP OF BASIN shall slope 2% toward curb except when otherwise shown on the plan or to fit existing sidewalk. To be poured monolithic with sidewalk if curb sidewalk is used.

10. STEP SPACING:
    iF V IS 3-1/2' or less no setps are required
    if V is more than 3'-1/2' and not more than 4', install one step 12" above the floor.
    If V is more than 4', install steps 12" apart with the top step 20" to 24" below the top surface of the basin
    When the basin has a channel use V minus shelf height to determine step spacing.

11. CENTER SUPPORT ASSEMBLE shall be used when two or more gratings are specified.

12. 1/2" MACHINE BOLTS shall be used to join two or more frames together and to the H beam.

13. METAL PARTS shall be structural grade steel and all exposed metal parts shall be galvanized.

14. 1/2" x 8" BOLTS with square heads and nuts shall be placed at outside corners of basin.

APPROVED BY
CITY ENGINEER — DATE 5/18/11

MARK	REVISIONS	APPR.	DATE

CITY OF RIVERSIDE
PUBLIC WORKS DEPARTMENT

CATCH BASIN

STANDARD DRAWING NO. 406

Sheet 2 of 2

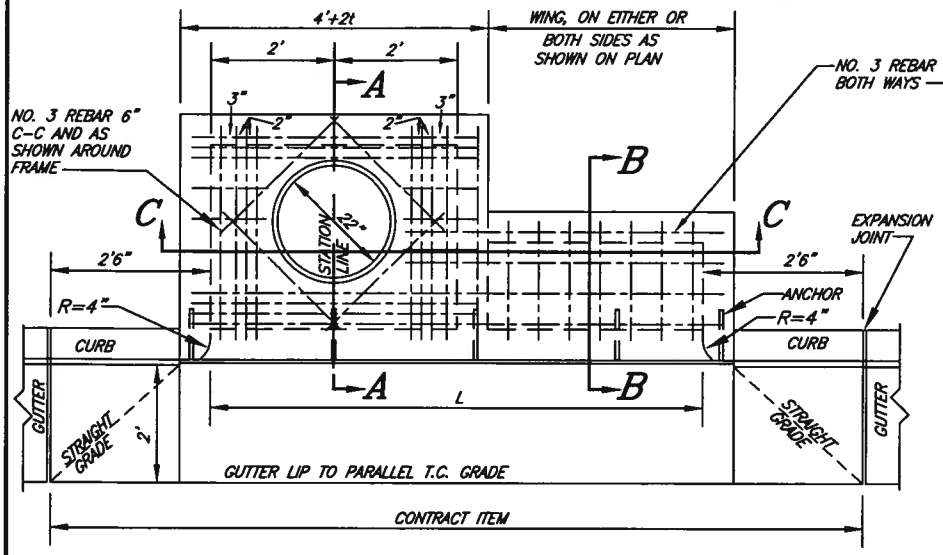

PLAN VIEW

N.T.S.

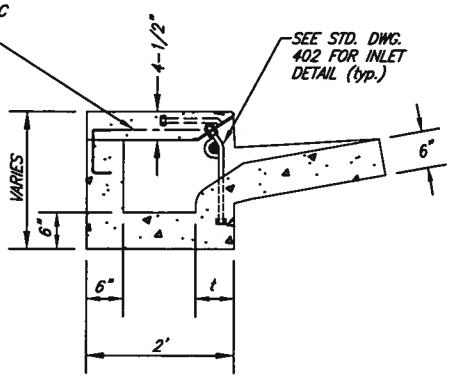

SECTION B-B

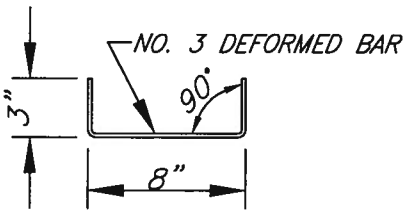

DETAIL OF DOWEL

N.T.S.

TO BE USED WHEN TOP IS POURED SEPARATE, ONE AT EACH CORNER

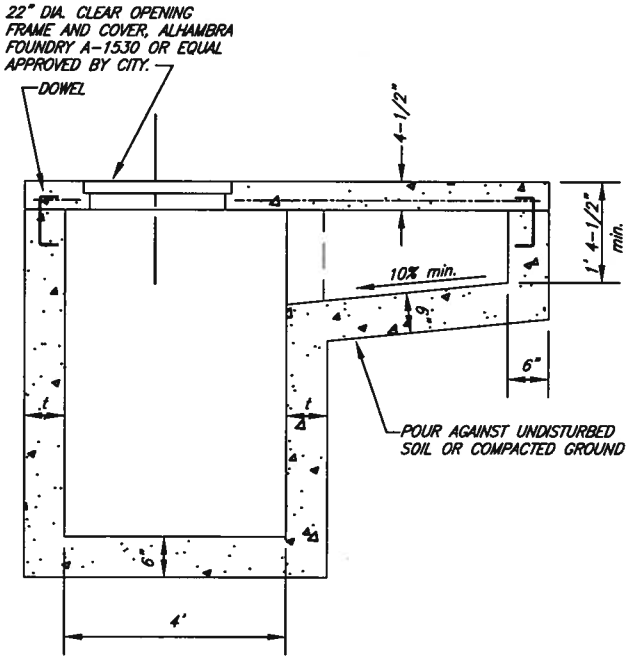

SECTION C-C

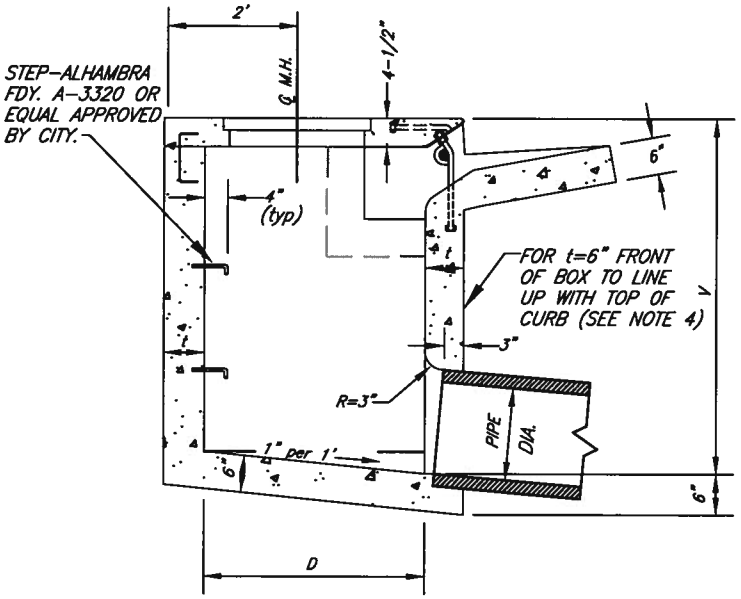

SECTION A-A

APPROVED BY			
CITY ENGINEER		DATE 5/18/11	
MARK	REVISIONS	APPR.	DATE

CITY OF RIVERSIDE

PUBLIC WORKS DEPARTMENT

CATCH BASIN

STANDARD DRAWING NO. 407

Sheet 1 of 2

NOTES:

1. CONCRETE shall be 560-C-3250 Portland Cement Concrete.

2. CONNECTOR PIPE shall be horizontally centered on the wall of the deep portion of the catch basin which faces the connector pipe.

3. CURVATURE of the lip and sidewalls at the opening shall be formed by curved forms and shall not be made by plastering.

4. DIMENSIONS:
   L shall be as specified on the plan (8' min.)
   V shall be as specified on the plan.
   D = 3' unless otherwise specified on the plan.
   t = 6" if V is 4' or less
   t = 8" if V is between 4' and 8'
   t = 10" if V is 8' or more
   t > 6", widening of wall shall be on street side.

5. CHANNEL shall be constructed in catch basins having inlet pipes. Where V minus shelf height is less than 2-1/2' the channel may be omitted. See Standard Drawing No. 405 for channel detail.

6. STEP SPACING
   If V is 3.5' or less, no steps are required.
   If V is more than 3.5' and not more than 4', install one step 12" above the floor.
   If V is more than 4', install steps 12" apart with the top step 20" to 24" below the top surface at the basin.
   When the basin has a channel use V minus shelf height to determine step spacing.

7. PIPES shall be trimmed to the final shape and length before concrete is poured.

8. SURFACE of all exposed concrete in basin shall conform in slope, grade, color, finish and scoring to existing or proposed curb and walk adjacent to the basin and shall be free from protruding wires and nails. Floor of channel shall be given a steel-troweled finish.

9. TOP OF BASIN shall slope 2% toward curb except when otherwise shown on the plan or to fit existing sidewalk. To be poured monolithic with sidewalk if curb sidewalk is used.

10. FRAME AND COVER shall be located as shown on sheet 1 unless otherwise shown on the plan.

APPROVED BY
CITY ENGINEER — DATE 5/18/11

MARK	REVISIONS	APPR.	DATE

CITY OF RIVERSIDE
PUBLIC WORKS DEPARTMENT

CATCH BASIN

STANDARD DRAWING NO. 407
Sheet 2 of 2

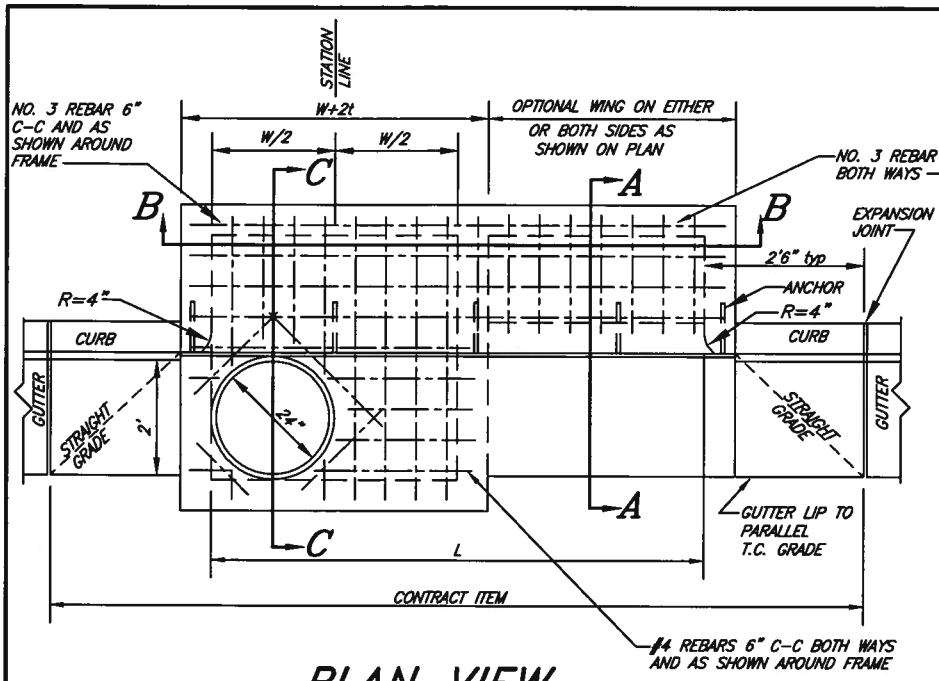

PLAN VIEW

N.T.S.

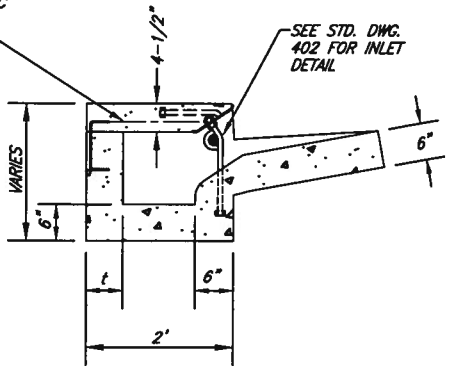

SECTION A-A

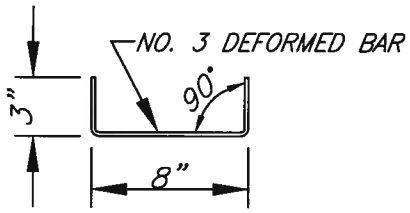

DETAIL OF DOWEL

N.T.S.

TO BE USED WHEN TOP IS POURED SEPARATE, ONE AT EACH CORNER

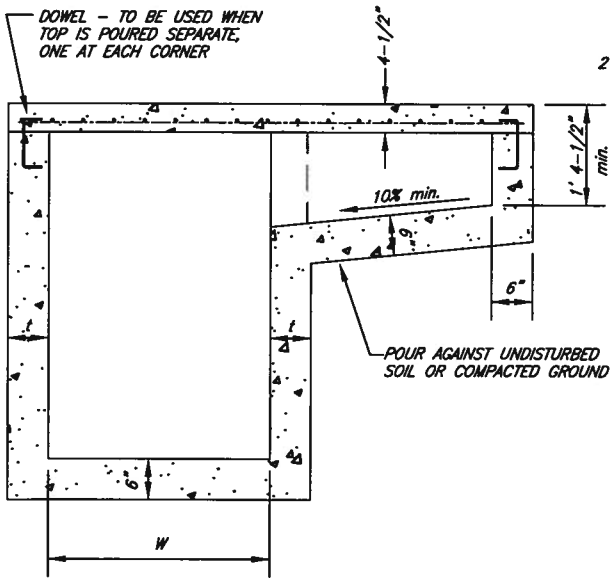

SECTION B-B

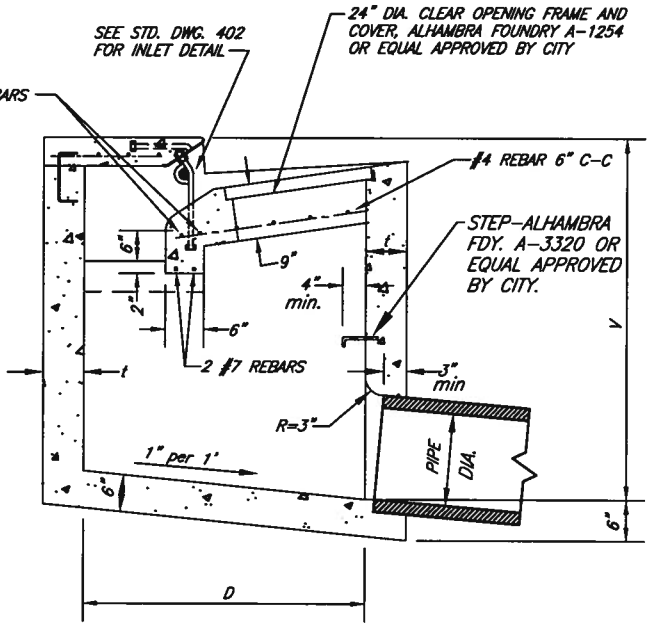

SECTION C-C

APPROVED BY			
CITY ENGINEER		DATE 5/18/11	
MARK	REVISIONS	APPR.	DATE

CITY OF RIVERSIDE

PUBLIC WORKS DEPARTMENT

CATCH BASIN

STANDARD DRAWING NO. 408

Sheet 1 of 2

NOTES:

1. CONCRETE shall be Class 560-C-3250.

2. CURVATURE of the lip and sidewalls at the opening shall be formed by curved forms and shall not be made by plastering.

3. DIMENSIONS;
   W shall be as specified on the plan (4' min.)
   L shall be as specified on the plan.
   V shall be as specified on the plan.
   D = 4'6" unless otherwise specified on the plan.
   t = 6" if V is 4' or less.
   t = 8" if V is between 4' and 8'.
   t = 10" if V is 8' or more.

4. CHANNEL shall be constructed in catch basins having inlet pipes. Where V minus shelf height is less than 2-1/2' the channel may be omitted. See Standard Drawing No. 405 for channel detail.

5. STEP SPACING
   If V is 3.5' or less, no steps are required.
   If V is more than 3.5' and not more than 4', install one step 12" above the floor.
   If V is more than 4', install steps 12" apart with the top step 20" to 24" below the top surface of the basin.
   When the basin has a channel use V minus shelf height to determine step spacing.

6. PIPES shall be trimmed to the final shape and length before concrete is poured.

7. SURFACE of all exposed concrete in basin shall conform in slope, grade, color, finish and scoring to existing or proposed curb and walk adjacent to the basin and shall be free from protruding wires and nails. Floor of channel shall be given a steel-troweled finish.

8. TOP OF BASIN shall slope 2% toward curb except when otherwise shown on the plan or to fit existing sidewalk. To be poured monolithic with sidewalk if curb sidewalk is used.

9. FRAME AND COVER shall be located as shown on sheet 1 unless otherwise shown on the plan.

APPROVED BY
CITY ENGINEER — DATE 5/18/11

MARK	REVISIONS	APPR.	DATE

CITY OF RIVERSIDE
PUBLIC WORKS DEPARTMENT

CATCH BASIN

STANDARD DRAWING NO. 408

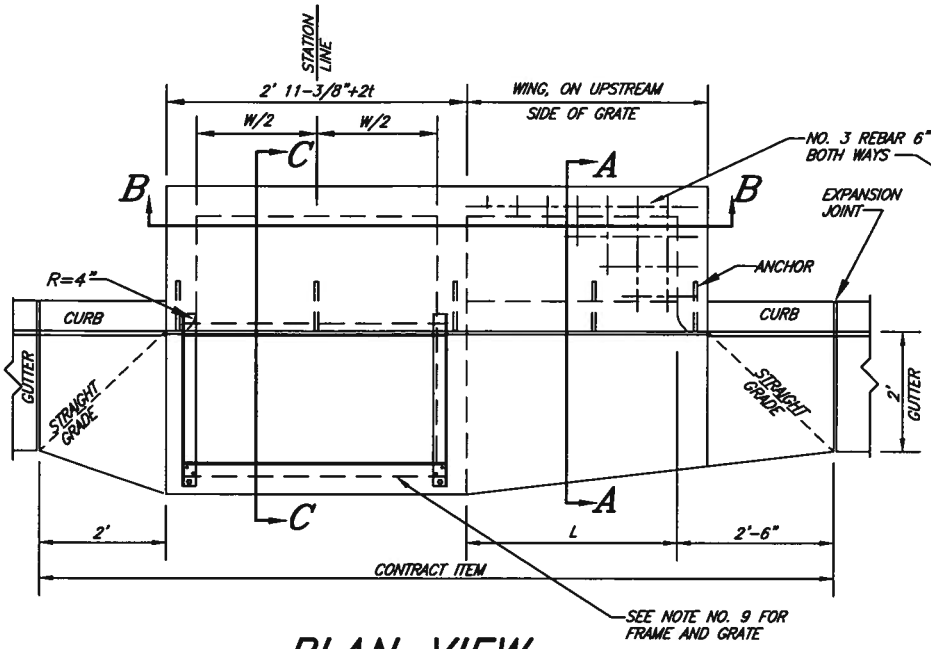

PLAN VIEW

N.T.S.

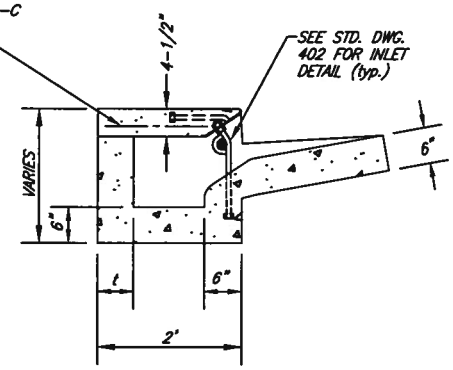

SECTION A-A

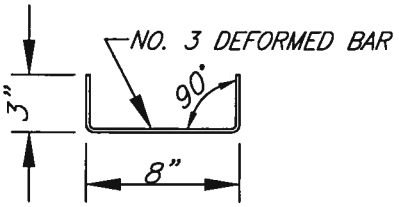

DETAIL OF DOWEL

N.T.S.

TO BE USED WHEN TOP IS POURED SEPARATE, ONE AT EACH CORNER

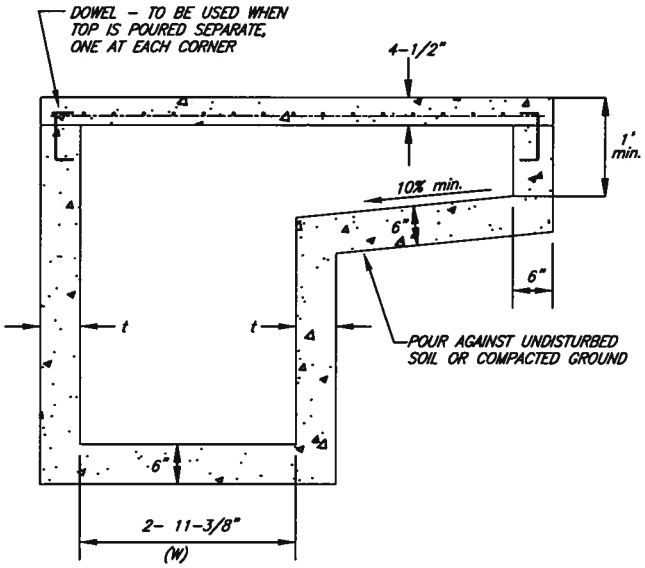

SECTION B-B

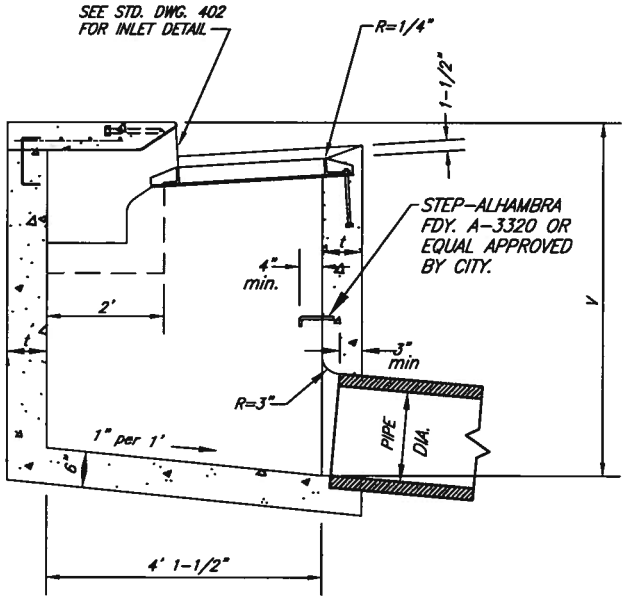

SECTION C-C

APPROVED BY			
CITY ENGINEER		DATE 5/18/11	
MARK	REVISIONS	APPR.	DATE

CITY OF RIVERSIDE

PUBLIC WORKS DEPARTMENT

CATCH BASIN

STANDARD DRAWING NO. 409

Sheet 1 of 2

NOTES:

1. CONCRETE shall be Class 560-C-3250.

2. CURVATURE of the lip and sidewalls at the opening shall be formed by curved forms and shall not be made by plastering.

3. DIMENSIONS:
   L shall be as specified on the plan.
   V shall be as specified on the plan.
   t = 6" if V is 4' or less.
   t = 8" if V is between 4' and 8'.
   t = 10" if V is 8' or more.

4. CHANNEL shall be constructed in catch basins having inlet pipes. Where V minus shelf height is less than 2-1/2' the channel may be omitted. See Standard Drawing No. 405 for channel detail.

5. STEP SPACING
   If V is 3.5' or less, no steps are required.
   If V is more than 3.5' and not more than 4', install one step 12" above the floor.
   If V is more than 4', install steps 12" apart with the top step 20" to 24" below the top surface of the basin.
   When the basin has a channel use V minus shelf height to determine step spacing.

6. PIPES shall be trimmed to the final shape and length before concrete is poured.

7. SURFACE of all exposed concrete in basin shall conform in slope, grade, color, finish and scoring to existing or proposed curb and walk adjacent to the basin and shall be free from protruding wires and nails. Floor of channel shall be given a steel-troweled finish.

8. TOP OF BASIN shall slope 2% toward curb except when otherwise shown on the plan or to fit existing sidewalk. To be poured monolithic with S/W if curb S/W is used.

9. FRAME shall be Alhambra Foundry A-1540 or equal approved by city; grate shall be A-1546 or equal approved by city.

10. METAL PARTS shall be structural grade steel and all exposed metal parts shall be galvanized.

APPROVED BY
CITY ENGINEER — DATE 5/18/11

MARK	REVISIONS	APPR.	DATE

CITY OF RIVERSIDE
PUBLIC WORKS DEPARTMENT

CATCH BASIN

STANDARD DRAWING NO. 409
Sheet 2 of 2

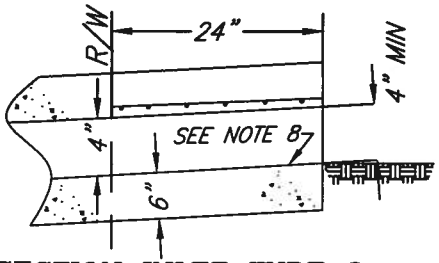

SECTION INLET TYPE 2

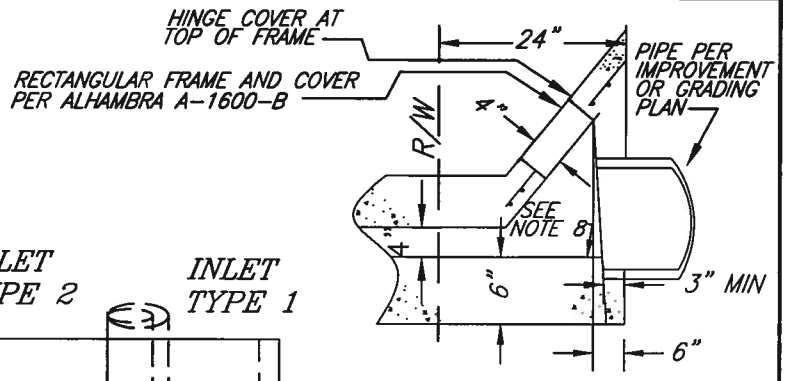

SECTION INLET TYPE 1

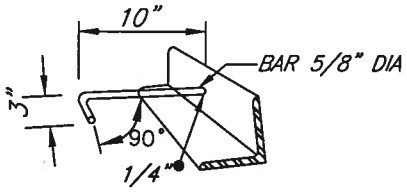

DETAIL OF ANCHOR

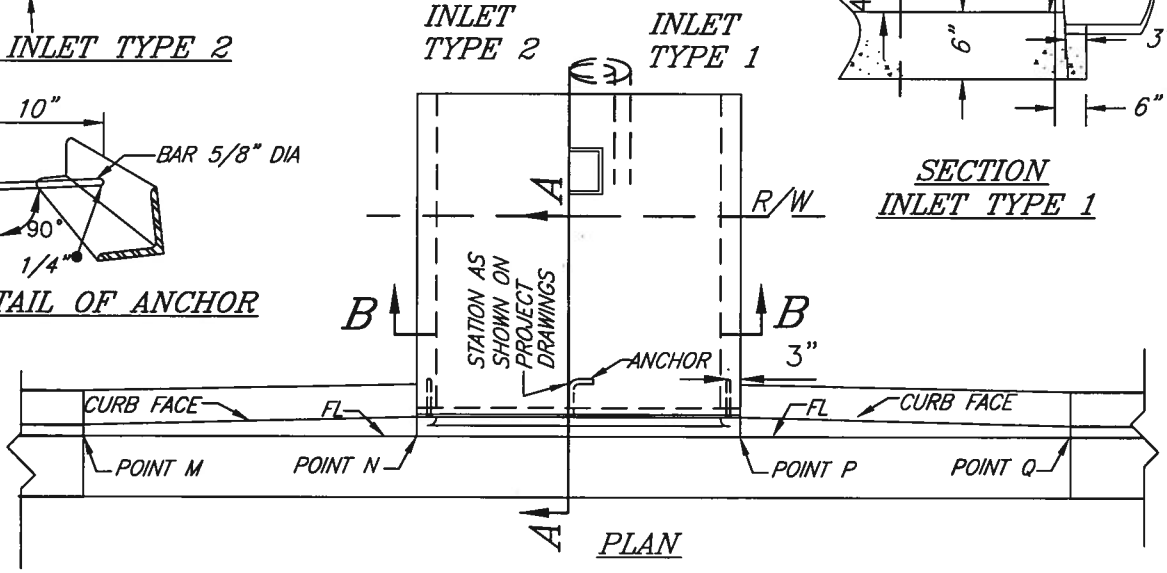

PLAN

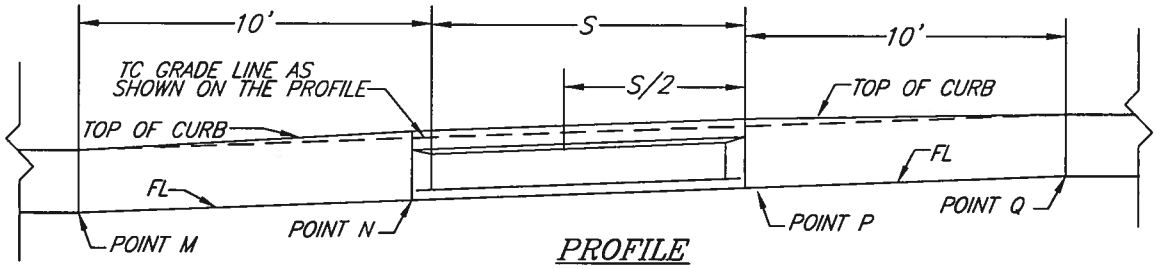

PROFILE

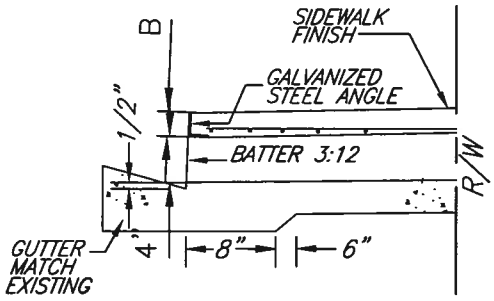

SECTION A-A

S	J BAR SPACING, IN
12"	7"
18"	7"
24"	7"
30"	7"
36"	7"
42"	6"
48"	5"
54"	5"
60"	5"
66"	4"
72"	3-1/2"

FOR S=30" AND LESS, USE 2 ANCHORS. OTHERWISE, USE 3 ANCHORS.

FOR S=18" AND LESS, B=3"

USE 2-1/2"x2"x3/8" GALVANIZED STEEL ANGLE.

OTHERWISE, B=4". 3-1/2" x 3" x1/2" GALVANIZED STEEL ANGLE

J BARS ARE #3

#3 @ 12" MAX OC

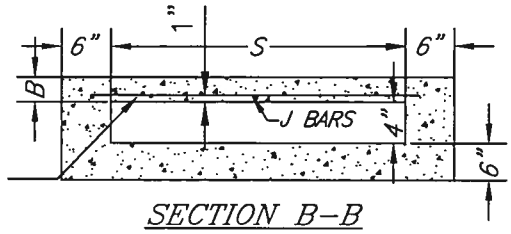

SECTION B-B

APPROVED BY

CITY ENGINEER

5/18/11

DATE

MARK	REVISIONS	APPR.	DATE

CITY OF RIVERSIDE

PUBLIC WORKS DEPARTMENT

PARKWAY DRAIN

STANDARD DRAWING NO. 410

Sheet 1 of 2

NOTES:

1. FLOOR OF BOX SHALL BE TROWLED SMOOTH.
2. IF THE TOE OF SLOPE IS ALLOWED WITHIN THE R/W, INLET TYPE 1 BEGINS AT THE TOE RATHER THAN AT THE R/W LINE.
3. FOR OPEN DITCH (TYPE 2), THE 24 INCH EXTENSION BEYOND THE R/W LINE IS NOT REQUIRED WHEN BACK OF WALK IS 24 INCHES OR MORE FROM THE R/W LINE IN ANY EVENT.
4. TOP OF INLET STRUCTURE (TYPE 1 AND 2) SHALL BE FLUSHED WITH ADJACENT SURFACE WHERE PRACTICAL.
5. A HEADED STEEL STUD 5/8" X 6-3/8", 1" HEAD, ATTACHED BY A FULL PENETRATION BUTT WELD MAY BE USED AS AN ALTERNATE ANCHOR.
6. NORMAL CURB FACE AT POINT M AND Q. CURB FACE B + 5 INCHES AT POINT N AND P.
7. THE 3 INCH LEG OF THE 5/8 INCH DIA ANCHORS SHALL BE PARALLEL TO THE TOP OF SIDEWALK.
8. SLOPE = 2%.

APPROVED BY

CITY ENGINEER

5/18/11

DATE

MARK	REVISIONS	APPR.	DATE

CITY OF RIVERSIDE

PUBLIC WORKS DEPARTMENT

PARKWAY DRAIN

STANDARD DRAWING NO. 410

Sheet 2 of 2

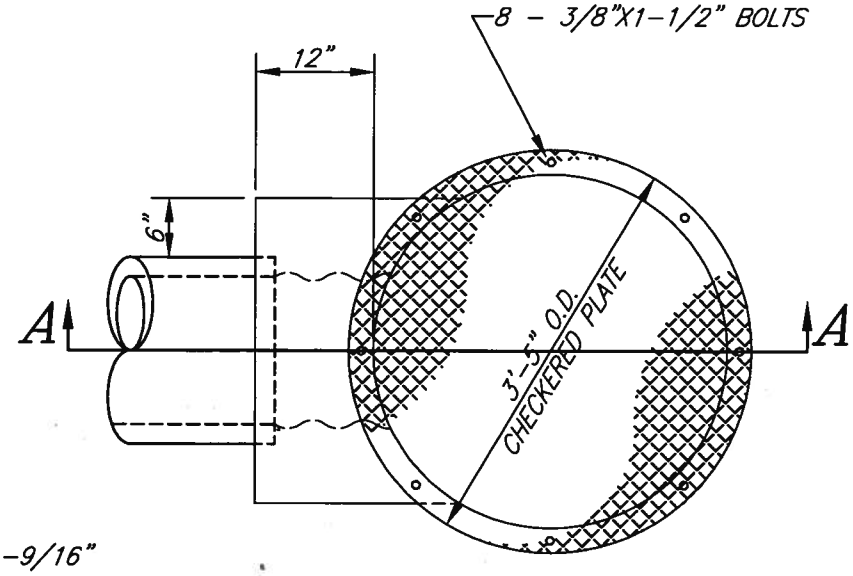

PLAN VIEW

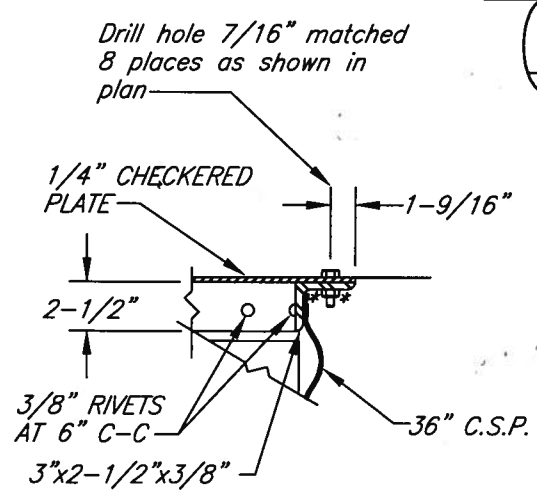

* Field Weld each nut to angle
Plate and Angle shall be galvanized

DETAIL "A"

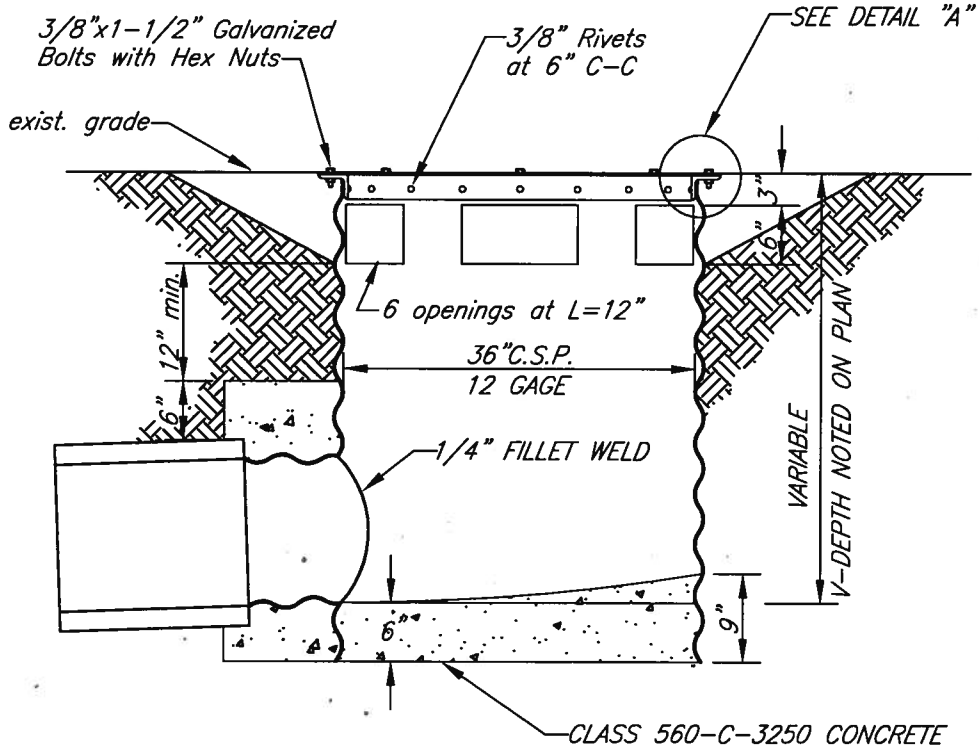

SECTION A-A

APPROVED BY			
CITY ENGINEER		DATE 5/18/11	
MARK	REVISIONS	APPR.	DATE

CITY OF RIVERSIDE

PUBLIC WORKS DEPARTMENT

C.S.P. INLET

STANDARD DRAWING NO. 412

Sheet 1 of 1

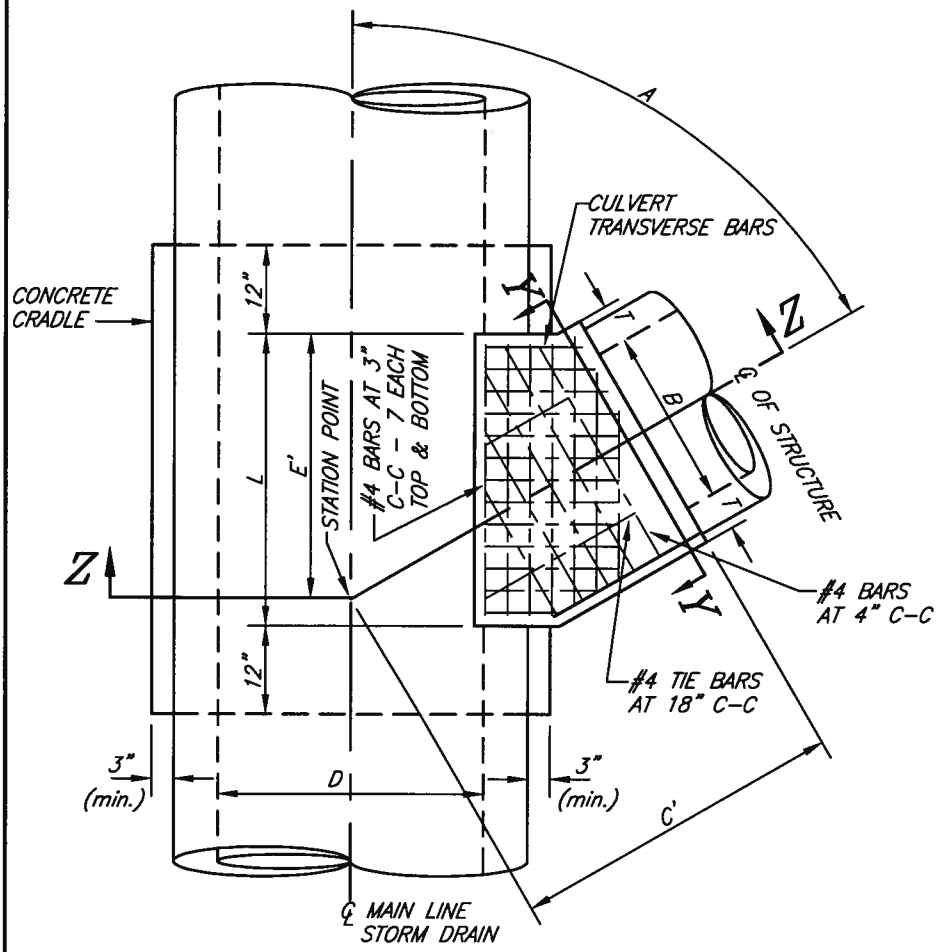

PLAN VIEW

TABLE OF VALUES FOR T	
B	T
12"	4"
15"	4-1/4"
18"	4-1/2"
21"	5"
24"	5-1/4"
27"	5-1/2"
30"	6"
33"	6-1/4"
36"	6-1/2"
39"	7"

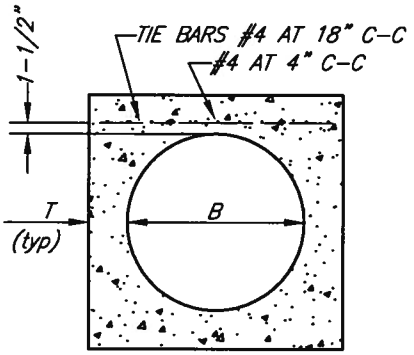

SECTION Y-Y

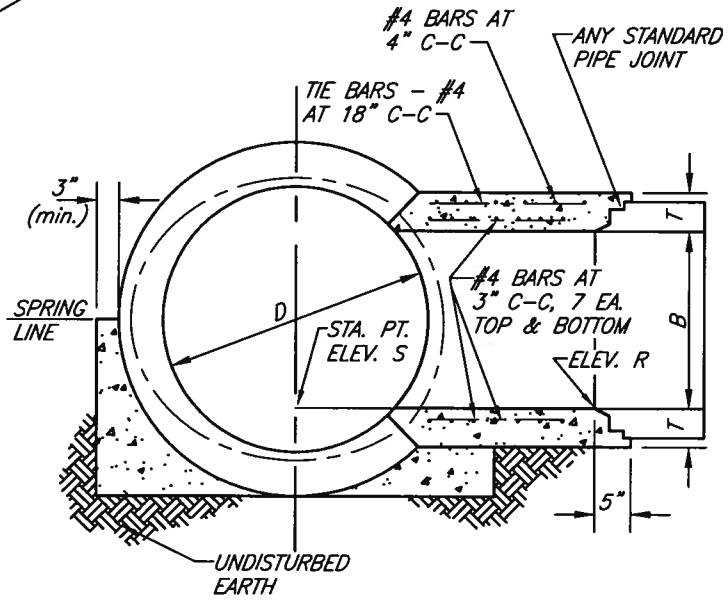

SECTION Z-Z

NOTES:

1. Values for A,B,C'D,E', & L, elevations R and S shown on improvement plan. (See Sheet 2 of 2.)
2. Cradle may be omitted on side opposite lateral inlet when connecting with existing storm drain pipe
3. Transverse reinforcement in pipe shall be cut in center of opening and bent to uniform distance from top and bottom of junction structure.
4. Concrete shall be class 560-C- 3250.
5. Reinforcing steel shall be 1.5" clear from face of concrete.
6. Floor of Structure shall be steel-troweled to spring line.

APPROVED BY
CITY ENGINEER — DATE 5/18/11

MARK	REVISIONS	APPR.	DATE

CITY OF RIVERSIDE
PUBLIC WORKS DEPARTMENT

JUNCTION STRUCTURE B

STANDARD DRAWING NO. 421

Sheet 1 of 2

STORM DRAIN MAIN

D/D2	ANGLE VALUE	30	40	50	60	70	80
12	C	2.2	1.8	1.6	1.5	1.4	1.3
	E	1.4	1.0	0.7	0.5	0.3	0.1
15	C	2.5	2.0	1.8	1.6	1.5	1.5
	E	1.7	1.2	0.8	0.6	0.4	0.2
18	C	2.8	2.3	2.0	1.8	1.7	1.6
	E	1.9	1.3	0.9	0.6	0.4	0.2
21	C	3.1	2.5	2.2	2.0	1.9	1.8
	E	2.2	1.5	1.1	0.7	0.5	0.2
24	C	3.4	2.7	2.4	2.2	2.0	2.0
	E	2.5	1.7	1.2	0.8	0.5	0.3
27	C	3.7	3.0	2.6	2.3	2.2	2.1
	E	2.7	1.9	1.3	0.9	0.6	0.3
30	C	4.0	3.2	2.8	2.5	2.4	2.3
	E	3.0	2.1	1.5	1.0	0.6	0.3
33	C	4.3	3.4	3.0	2.7	2.5	2.4
	E	3.3	2.3	1.6	1.1	0.7	0.3
36	C	4.6	3.7	3.2	2.9	2.7	2.6
	E	3.5	2.4	1.7	1.2	0.7	0.4
39	C	4.9	3.9	3.4	3.0	2.9	2.7
	E	3.8	2.6	1.9	1.3	0.8	0.4
42	C	5.3	4.2	3.6	3.2	3.0	2.9
	E	4.1	2.8	2.0	1.4	0.9	0.4
45	C	5.5	4.4	3.8	3.4	3.2	3.1
	E	4.4	3.0	2.1	1.5	0.9	0.4
48	C	5.8	4.6	4.0	3.6	3.3	3.2
	E	4.6	3.2	2.2	1.5	1.0	0.5
51	C	6.2	4.9	4.2	3.8	3.5	3.4
	E	4.9	3.4	2.4	1.6	1.0	0.5
54	C	6.5	5.2	4.4	4.0	3.7	3.5
	E	5.2	3.6	2.5	1.7	1.1	0.5
57	C	6.8	5.4	4.6	4.1	3.8	3.7
	E	5.4	3.7	2.6	1.8	1.1	0.6
60	C	7.1	5.6	4.8	4.3	4.0	3.8
	E	5.7	3.9	2.8	1.9	1.2	0.6
63	C	7.4	5.9	5.0	4.5	4.2	4.0
	E	6.0	4.1	2.9	2.0	1.3	0.6
66	C	7.7	6.1	5.2	4.7	4.3	4.2
	E	6.2	4.3	3.0	2.1	1.3	0.6
69	C	8.0	6.4	5.4	4.9	4.5	4.3
	E	6.5	4.5	3.2	2.2	1.4	0.7
72	C	8.3	6.6	5.6	5.0	4.7	4.5
	E	6.8	4.7	3.3	2.3	1.4	0.7
75	C	8.6	6.8	5.8	5.2	4.8	4.6
	E	7.0	4.8	3.4	2.3	1.5	0.7
78	C	9.0	7.1	6.0	5.4	5.0	4.8
	E	7.3	5.0	3.5	2.4	1.5	0.7
81	C	9.3	7.3	6.2	5.6	5.2	4.9
	E	7.6	5.2	3.7	2.5	1.6	0.8
84	C	9.6	7.6	6.4	5.7	5.3	5.1
	E	7.9	5.4	3.8	2.6	1.7	0.8
87	C	9.9	7.8	6.6	5.9	5.5	5.3
	E	8.1	5.6	3.9	2.7	1.7	0.8
90	C	10.2	8.1	6.8	6.1	5.7	5.4
	E	8.4	5.8	4.1	2.8	1.8	0.9
93	C	10.5	8.3	7.0	6.3	5.8	5.6
	E	8.7	6.0	4.2	2.9	1.8	0.9
96	C	10.8	8.5	7.2	6.5	6.0	5.7
	E	8.9	6.2	4.3	3.0	1.9	0.9

STORM DRAIN LATERAL

B	ANGLE VALUE	30	40	50	60	70	80
12	C	1.4	1.0	0.7	0.5	0.3	0.1
	E	1.7	1.3	1.1	1.0	0.9	0.8
	L	3.3	2.6	2.2	1.9	1.8	1.7
15	C	1.7	1.2	0.8	0.6	0.4	0.2
	E	2.0	1.5	1.3	1.1	1.0	1.0
	L	3.9	3.0	2.6	2.3	2.1	2.0
18	C	1.9	1.3	0.9	0.6	0.4	0.2
	E	2.3	1.8	1.5	1.3	1.2	1.0
	L	4.5	3.5	2.9	2.6	2.4	2.0
21	C	2.2	1.5	1.1	0.7	0.5	0.2
	E	2.6	2.0	1.7	1.5	1.4	1.3
	L	5.2	4.0	3.4	3.0	2.7	2.6
24	C	2.5	1.7	1.2	0.8	0.5	0.3
	E	2.9	2.2	1.9	1.7	1.5	1.5
	L	5.8	4.5	3.8	3.3	3.1	2.9
27	C	2.7	1.9	1.3	0.9	0.6	0.3
	E	3.2	2.5	2.1	1.8	1.7	1.6
	L	6.3	4.9	4.1	3.7	3.4	3.2
30	C	3.0	2.1	1.5	1.0	0.6	0.3
	E	3.5	2.7	2.3	2.0	1.9	1.8
	L	7.0	5.4	4.6	4.0	3.7	3.6
33	C	3.3	2.3	1.6	1.1	0.7	0.3
	E	3.8	2.9	2.5	2.2	2.0	1.9
	L	7.6	5.9	4.9	4.4	4.0	3.9
36	C	3.5	2.4	1.7	1.2	0.7	0.4
	E	4.1	3.2	2.7	2.4	2.2	2.1
	L	8.2	6.4	5.3	4.7	4.3	4.1
39	C	3.8	2.6	1.9	1.3	0.8	0.4
	E	4.4	3.4	2.9	2.5	2.4	2.2
	L	8.8	6.9	5.8	5.1	4.7	4.5
42	C	4.1	2.8	2.0	1.4	0.9	0.4
	E	4.8	3.7	3.1	2.7	2.5	2.4
	L	9.5	7.4	6.2	5.5	5.1	4.8

EXAMPLE:

Given D = 36" A = 60° B = 27"
Find L, C', E'

Solution:

1. Enter Storm Drain Main Table with the given D & A:

   $C_M = 2.9'$ $E_M = 1.2'$

2. Enter Storm Drain Lateral Table with the given B & A:

   $C_L = 0.9'$ $E_L = 1.8'$ $L = 3.7'$

3. $C' = C_M + C$
   $C' = 2.9$ ft. $+ 0.9$ ft. $= 3.8$ ft.

4. $E' = E_M + E_L$
   $E' = 1.2$ ft. $+ 1.8$ ft. $= 3.0$ ft.

APPROVED BY

CITY ENGINEER

5/18/11
DATE

MARK	REVISIONS	APPR.	DATE

CITY OF RIVERSIDE
PUBLIC WORKS DEPARTMENT

JUNCTION STRUCTURE B

STANDARD DRAWING NO. 421

Sheet 2 of 2

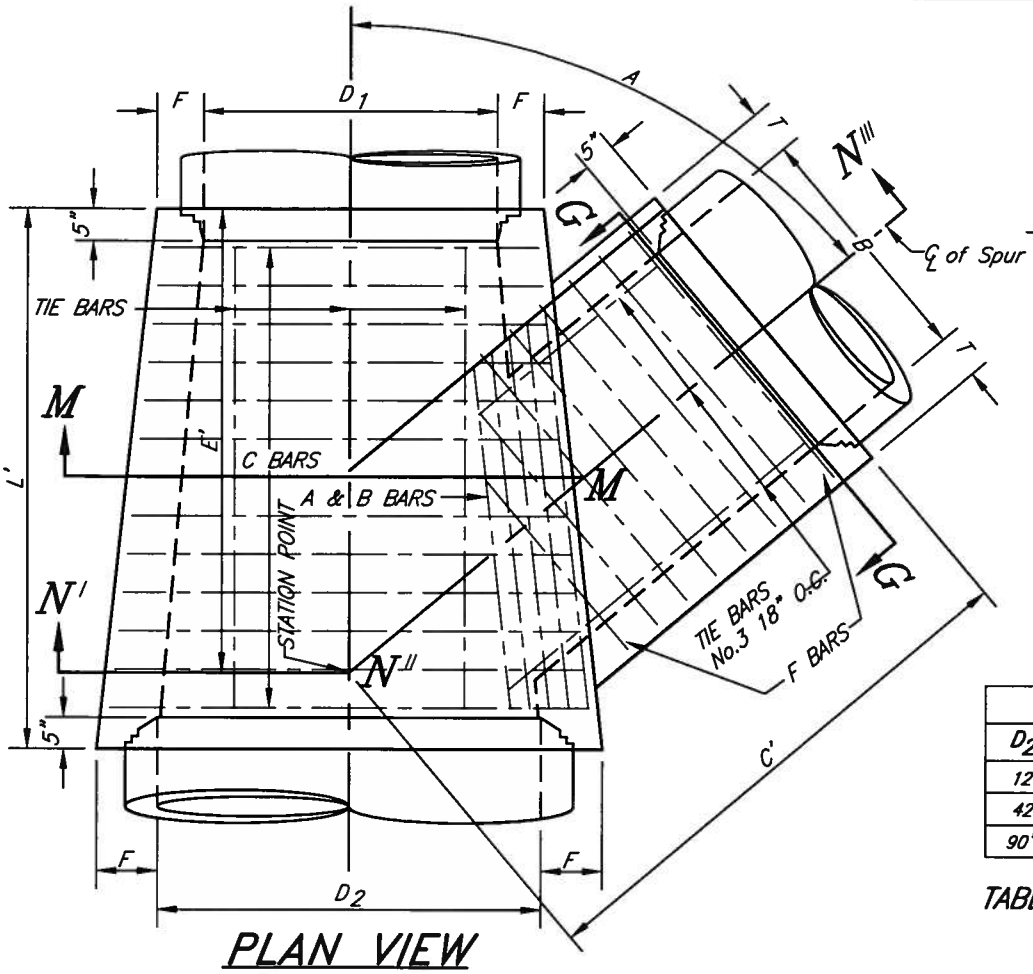

PLAN VIEW

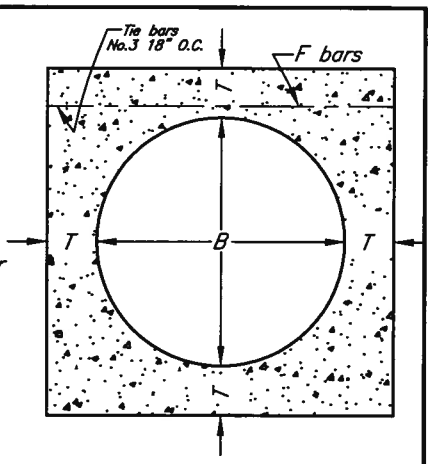

SECTION G–G

CONCRETE SPECS	
T	CONCRETE CLASS
4" – 9–1/2"	560–C–3250
10" – 11"	560–B–3250

TABLE OF BAR SIZES		
D_2 OR B	A & B BARS	C OR F BARS
12" – 39"	NO. 5 AT 3"	NO. 4 AT 6"
42" – 84"	NO. 6 AT 3"	NO. 5 AT 6"
90" – 144"	NO. 7 AT 3"	NO. 6 AT 6"

TABLE OF VALUES FOR F AND T

D_2	F
12"	4"
15"	4–1/4"
18"	4–1/2"
21"	5"
24"	5–1/4"
27"	5–1/2"
30"	6"
33"	6–1/4"
36"	6–1/2"
39"	7"
42"	7–1/2"
45"	7–3/4"
48"	8"
51"	8–1/2"
54"	9"
57"	9–1/4"
60"	9–1/2"
63"	10"
66"	10–1/4"
69"	10–3/4"
72"	11"
78"	11–3/4"
84"	12–1/2"
90"	13–1/4"
96"	14"

B	T
12"	4"
15"	4–1/4"
18"	4–1/2"
21"	5"
24"	5–1/4"
27"	5–1/2"
30"	6"
33"	6–1/4"
36"	6–1/2"
39"	7"
42"	7–1/2"
45"	7–3/4"
48"	8"
51"	8–1/2"
54"	9"
57"	9–1/4"
60"	9–1/2"
63"	10"
66"	10–1/4"
69"	10–3/4"
72"	11"

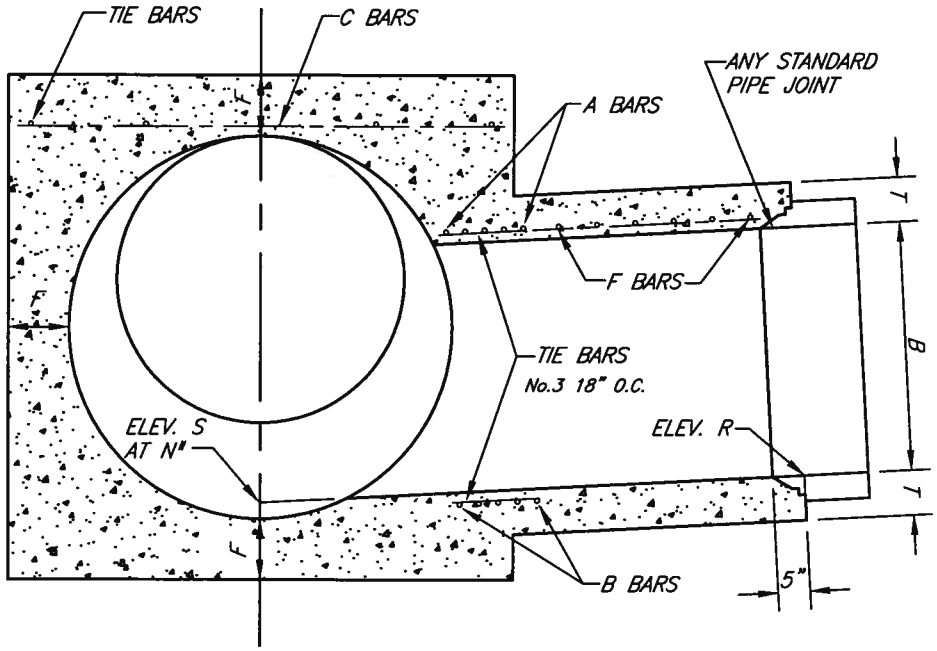

SECTION N' –N'' –N'''
Projected on M–M–N'''

APPROVED BY
CITY ENGINEER
DATE 5/18/11

MARK	REVISIONS	APPR.	DATE

CITY OF RIVERSIDE
PUBLIC WORKS DEPARTMENT

JUNCTION STRUCTURE C

STANDARD DRAWING NO. 422
Sheet 1 of 3

NOTES:

1. VALUES for A, B, C', D1, D2, E', L', Elevation R, and Elevation S are shown on Improvement Plan (see sheet 3 of 3). TABLE of values for F and T shown on this Standard Drawing, Sheet 1.

2. OPTIONAL CONSTRUCTION: When Junction Structure B is specified on improvement plan, the Contractor shall have the option of constructing Junction Structure C, in which case construction data will be furnished by the City Engineer.

3. CONCRETE shall be in accordance with the table on Sheet 1.

4. FLOOR of structure shall be steel-troweled to springing line.

5. REINFORCING STEEL shall be round, deformed, straight bars, 1-1/2" clear from face of concrete unless otherwise shown.

   Tie bars shall be No. 3 and spaced 18" on centers or closer.

   A and B bars need not be longer than the outside diagonal width of the lateral spur.

6. STEEL SCHEDULE detailed on improvement plan.

7. ELEVATION S applies at center of main line on prolongation of invert of spur.

8. JUNCTION STRUCTURE shall be poured in one continuous operation, except that the Contractor shall have the option of placing at the springing line a construction joint with a longitudinal keyway.

9. LENGTH L (shown on improvement plan) may be increased at the option of the Contractor to meet pipe ends, using C bars in extended portion of same diameter and spacing as specified on improvement plan, but any change in location of SPUR must be approved by the City Engineer.

10. STATIONS of manholes shown on improvement plan apply at intersection of main line and spur. Elevations shown at this point refer to prolonged invert grade lines, except that when intersection of center lines falls outside of structure, the elevations are shown and apply at extreme lower end of the structure.

11. LATERALS- Where laterals enter on both sides of structure, they shall be designated on the improvement plan as right or left, facing in the direction of stationing.

(Adapted from the City of Los Angeles Std. Plan No. B-1832)

APPROVED BY

CITY ENGINEER — DATE 5/18/11

MARK	REVISIONS	APPR.	DATE

CITY OF RIVERSIDE

PUBLIC WORKS DEPARTMENT

JUNCTION STRUCTURE C

STANDARD DRAWING NO. 422

Sheet 2 of 3

STORM DRAIN MAIN

D/D2	ANGLE / VALUE	30	40	50	60	70	80
12	C	2.2	1.8	1.6	1.5	1.4	1.3
	E	1.9	1.5	1.2	1.0	0.8	0.6
15	C	2.5	2.0	1.8	1.6	1.5	1.5
	E	2.2	1.7	1.3	1.1	0.9	0.7
18	C	2.8	2.3	2.0	1.8	1.7	1.6
	E	2.4	1.8	1.4	1.1	0.9	0.7
21	C	3.1	2.5	2.2	2.0	1.9	1.8
	E	2.7	2.0	1.6	1.2	1.0	0.7
24	C	3.4	2.7	2.4	2.2	2.0	2.0
	E	3.0	2.2	1.7	1.3	1.0	0.8
27	C	3.7	3.0	2.6	2.3	2.2	2.1
	E	3.2	2.4	1.8	1.4	1.1	0.8
30	C	4.0	3.2	2.8	2.5	2.4	2.3
	E	3.5	2.6	2.0	1.5	1.1	0.8
33	C	4.3	3.4	3.0	2.7	2.5	2.4
	E	3.8	2.8	2.1	1.6	1.2	0.8
36	C	4.6	3.7	3.2	2.9	2.7	2.6
	E	4.0	2.9	2.2	1.7	1.2	0.9
39	C	4.9	3.9	3.4	3.0	2.9	2.7
	E	4.3	3.1	2.4	1.8	1.3	0.9
42	C	5.3	4.2	3.6	3.2	3.0	2.9
	E	4.6	3.3	2.5	1.9	1.4	0.9
45	C	5.5	4.4	3.8	3.4	3.2	3.1
	E	4.9	3.5	2.6	2.0	1.4	0.9
48	C	5.8	4.6	4.0	3.6	3.3	3.2
	E	5.1	3.7	2.7	2.0	1.5	1.0
51	C	6.2	4.9	4.2	3.8	3.5	3.4
	E	5.4	3.9	2.9	2.1	1.5	1.0
54	C	6.5	5.2	4.4	4.0	3.7	3.5
	E	5.7	4.1	3.0	2.2	1.6	1.0
57	C	6.8	5.4	4.6	4.1	3.8	3.7
	E	5.9	4.2	3.1	2.3	1.6	1.1
60	C	7.1	5.6	4.8	4.3	4.0	3.8
	E	6.2	4.4	3.3	2.4	1.7	1.1
63	C	7.4	5.9	5.0	4.5	4.2	4.0
	E	6.5	4.6	3.4	2.5	1.8	1.1
66	C	7.7	6.1	5.2	4.7	4.3	4.2
	E	6.7	4.8	3.5	2.6	1.8	1.1
69	C	8.0	6.4	5.4	4.9	4.5	4.3
	E	7.0	5.0	3.7	2.7	1.9	1.2
72	C	8.3	6.6	5.6	5.0	4.7	4.5
	E	7.3	5.2	3.8	2.8	1.9	1.2
75	C	8.6	6.8	5.8	5.2	4.8	4.6
	E	7.5	5.3	3.9	2.8	2.0	1.2
78	C	9.0	7.1	6.0	5.4	5.0	4.8
	E	7.8	5.5	4.0	2.9	2.0	1.2
81	C	9.3	7.3	6.2	5.6	5.2	4.9
	E	8.1	5.7	4.2	3.0	2.1	1.3
84	C	9.6	7.6	6.4	5.7	5.3	5.1
	E	8.4	5.9	4.3	3.1	2.2	1.3
87	C	9.9	7.8	6.6	5.9	5.5	5.3
	E	8.6	6.1	4.4	3.2	2.2	1.3
90	C	10.2	8.1	6.8	6.1	5.7	5.4
	E	8.9	6.3	4.6	3.3	2.3	1.4
93	C	10.5	8.3	7.0	6.3	5.8	5.6
	E	9.2	6.5	4.7	3.4	2.3	1.4
96	C	10.8	8.5	7.2	6.5	6.0	5.7
	E	9.4	6.7	4.8	3.5	2.4	1.4

STORM DRAIN LATERAL

B	ANGLE / VALUE	30	40	50	60	70	80
12	C	1.9	1.5	1.2	1.0	0.8	0.6
	E	2.2	1.8	1.6	1.5	1.4	1.3
15	C	2.2	1.7	1.3	1.1	0.9	0.7
	E	2.5	2.0	1.8	1.6	1.5	1.5
18	C	2.4	1.8	1.4	1.1	0.9	0.7
	E	2.8	2.3	2.0	1.8	1.7	1.6
21	C	2.7	2.0	1.6	1.2	1.0	0.7
	E	3.1	2.5	2.2	2.0	1.9	1.8
24	C	3.0	2.2	1.7	1.3	1.0	0.8
	E	3.4	2.7	2.4	2.2	2.0	2.0
27	C	3.2	2.4	1.8	1.4	1.1	0.8
	E	3.7	3.0	2.6	2.3	2.2	2.1
30	C	3.5	2.6	2.0	1.5	1.1	0.8
	E	4.0	3.2	2.8	2.5	2.4	2.3
33	C	3.8	2.8	2.1	1.6	1.2	0.8
	E	4.3	3.4	3.0	2.7	2.5	2.4
36	C	4.0	2.9	2.2	1.7	1.2	0.9
	E	4.6	3.7	3.2	2.9	2.7	2.6
39	C	4.3	3.1	2.4	1.8	1.3	0.9
	E	4.9	3.9	3.4	3.0	2.9	2.7
42	C	4.6	3.3	2.5	1.9	1.4	0.9
	E	5.3	4.2	3.6	3.2	3.0	2.9
45	C	4.9	3.5	2.6	2.0	1.4	0.9
	E	5.5	4.4	3.8	3.4	3.2	3.1
48	C	5.1	3.7	2.7	2.0	1.5	1.0
	E	5.8	4.6	4.0	3.6	3.3	3.2
51	C	5.4	3.9	2.9	2.1	1.5	1.0
	E	6.2	4.9	4.2	3.8	3.5	3.4
54	C	5.7	4.1	3.0	2.2	1.6	1.0
	E	6.5	5.2	4.4	4.0	3.7	3.5
57	C	5.9	4.2	3.1	2.3	1.6	1.1
	E	6.8	5.4	4.6	4.1	3.8	3.7
60	C	6.2	4.4	3.3	2.4	1.7	1.1
	E	7.1	5.6	4.8	4.3	4.0	3.8
63	C	6.5	4.6	3.4	2.5	1.8	1.1
	E	7.4	5.9	5.0	4.5	4.2	4.0
66	C	6.7	4.8	3.5	2.6	1.8	1.1
	E	7.7	6.1	5.2	4.7	4.3	4.2
69	C	7.0	5.0	3.7	2.7	1.9	1.2
	E	8.0	6.4	5.4	4.9	4.5	4.3
72	C	7.3	5.2	3.8	2.8	1.9	1.2
	E	8.3	6.6	5.6	5.0	4.7	4.5
75	C	7.5	5.3	3.9	2.8	2.0	1.2
	E	8.6	6.8	5.8	5.2	4.8	4.6
78	C	7.8	5.5	4.0	2.9	2.0	1.2
	E	9.0	7.1	6.0	5.4	5.0	4.8
81	C	8.1	5.7	4.2	3.0	2.1	1.3
	E	9.3	7.3	6.2	5.6	5.2	4.9
84	C	8.4	5.9	4.3	3.1	2.2	1.3
	E	9.6	7.6	6.4	5.7	5.3	5.1
87	C	8.6	6.1	4.4	3.2	2.2	1.3
	E	9.9	7.8	6.6	5.9	5.5	5.3

EXAMPLE:

Given:

$D_2 = 60''$ $A = 50°$

$B = 39''$

Find: C', E', & L'

Solution:

1. Enter Storm Drain Main Table with the given D_2 & A:

   $C_M = 4.8ft$ $E_M = 3.3ft$

2. Enter Storm Drain Lateral Table with the given B & A:

   $C_L = 2.4ft$ $E_L = 3.4ft$

3. $C' = C_M + C_L$
   $C' = 4.8$ ft. $+ 2.4$ ft. $= 7.2$ ft.

4. $E' = E_M + E_L$
   $E' = 3.3$ ft. $+ 3.4$ ft. $= 6.7$ ft.

5. $L' = E' + 1$ ft. $=$
   6.7 ft. $+ 1$ ft. $= 7.7$ ft.

APPROVED BY

CITY ENGINEER

5/18/11

DATE

MARK	REVISIONS	APPR.	DATE

CITY OF RIVERSIDE

PUBLIC WORKS DEPARTMENT

JUNCTION STRUCTURE C

STANDARD DRAWING NO. 422

Sheet 3 of 3

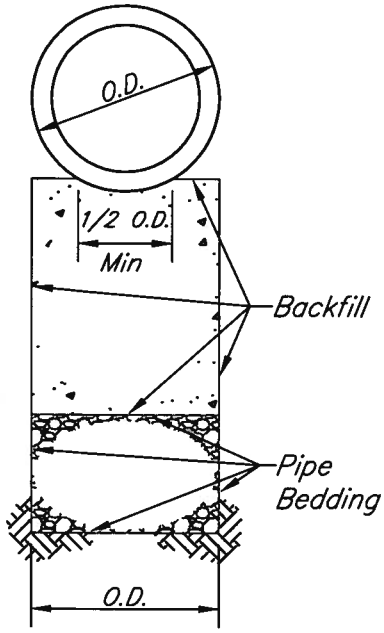

SECTION C–C

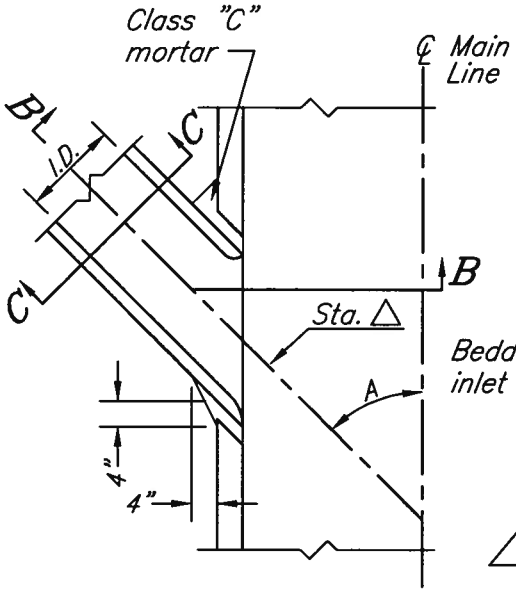

SECTION A–A

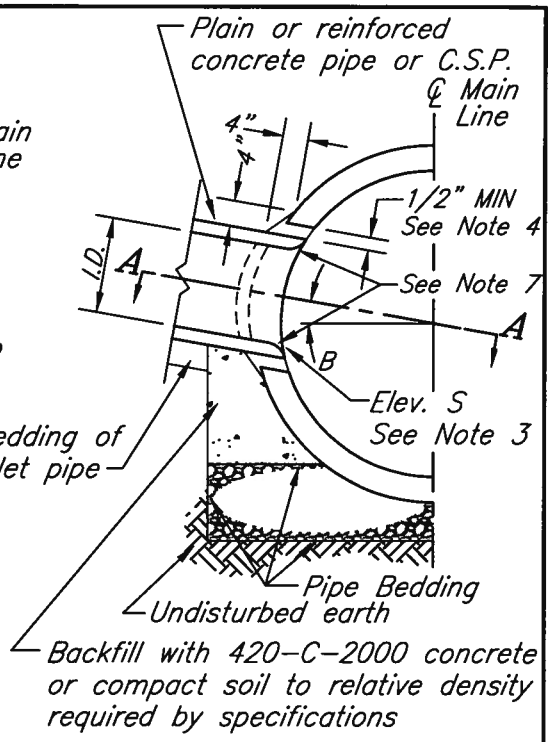

SECTION B–B

CASE 1

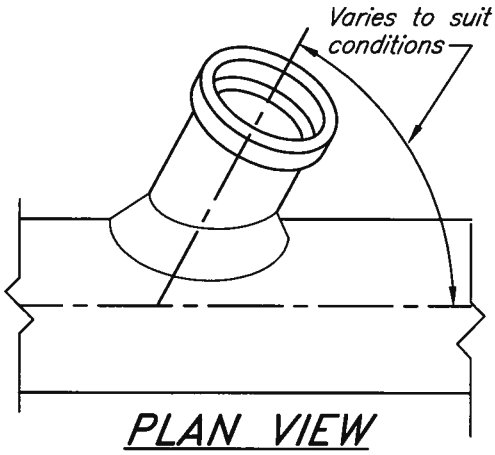

PLAN VIEW

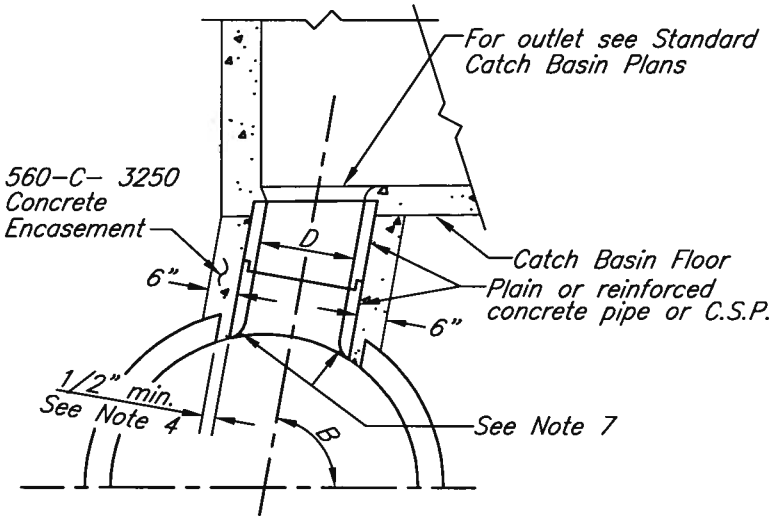

CASE 2

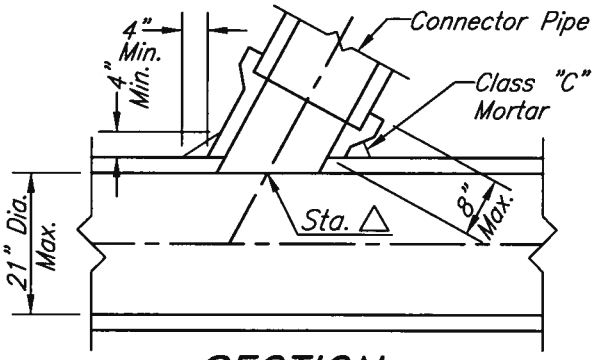

SECTION

CASE 3
SADDLE CONNECTION

NOTE:
All connector pipes (within the angles specified for Case 2) shall be encased when laid within the main line excavated trench, or when laid on fill which has not been densified.

APPROVED BY

CITY ENGINEER — DATE 5/18/11

MARK	REVISIONS	APPR.	DATE

CITY OF RIVERSIDE
PUBLIC WORKS DEPARTMENT

JUNCTION STRUCTURE NO. 4

STANDARD DRAWING NO. 423

Sheet 1 of 2

NOTES: CASE 1 AND CASE 2

1. Angle A shall be between 45 degrees and 90 degrees and D shall be 24" or less. For smaller values of A and larger values of D, use appropriate standard structure.

2. In no case shall the outside diameter of the inlet pipe exceed 1/2 the inside diameter of the main storm drain.

3. Center line of inlet shall be on radius of main storm drain except where Elevation S is shown on project drawings.

4. The opening into the main storm drain shall be the outside diameter of the inlet pipe plus one inch minimum or 3 inch maximum.

5. All corrugated metal pipe and fittings shall be galvanized.

6. If Angle B is 45 degrees or less, use Case 1. If Angle B is greater than 45 degrees, use Case 2.

7. Burn or chip end of connector pipe flush with inner surface of mainline pipe. Round edge of concrete pipe or reinforced concrete pipe.

8. Station specified on drawings applies at the intersection of inside wall of main storm drain and center line of inlet pipe.

NOTES: CASE 3

1. Connections to pipes 21" or less in diameter without junction structures or precast Y branches shall be made with saddles.

2. Trim or cut saddle to fit snugly over the outside of the main pipe, and so its axis will be on the line and grade of the connecting pipe.

3. The opening into the pipe shall be cut and trimmed to fit the saddle so that no part will project within the bore of the saddle pipe.

4. The connecting pipe shall be supported as shown in Cases 1 & 2.

APPROVED BY

CITY ENGINEER — DATE 5/18/11

MARK	REVISIONS	APPR.	DATE

CITY OF RIVERSIDE

PUBLIC WORKS DEPARTMENT

JUNCTION STRUCTURE NO. 4

STANDARD DRAWING NO. 423

Sheet 2 of 2

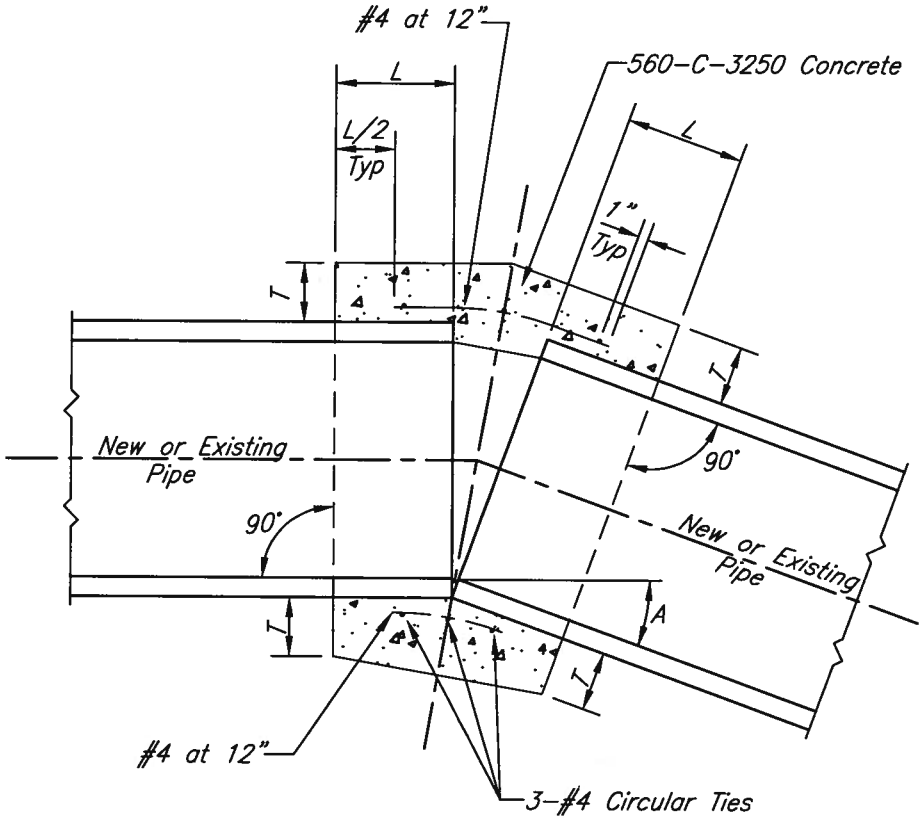

NOTES:

1. A concrete collar is required where the change in grade exceeds 0.10 ft. per foot.
2. For pipe size not listed use next size large.
3. Omit reinforcing on pipes 24" and less in diameter and on all pipe where angle A is less than 10°.
4. Where reinforcing is required the diameter of the circular ties shall be the pipe diameter + (2 x wall thickness) + 8".
5. Pipe may be concrete pipe, reinforced concrete pipe, or asbestos cement pipe.

PIPE DIA.	L	T
12"	1.0'	4"
18"	1.0'	5"
24"	1.0'	6"
36"	1.5'	8"
48"	1.5'	10"
57"	1.5'	10"
60"	1.75'	11"
66"	1.75'	11"

APPROVED BY

CITY ENGINEER

5/18/11
DATE

MARK	REVISIONS	APPR.	DATE

CITY OF RIVERSIDE

PUBLIC WORKS DEPARTMENT

CONCRETE COLLAR
(PIPES 12" - 66")

STANDARD DRAWING NO. 424

Sheet 1 of 1

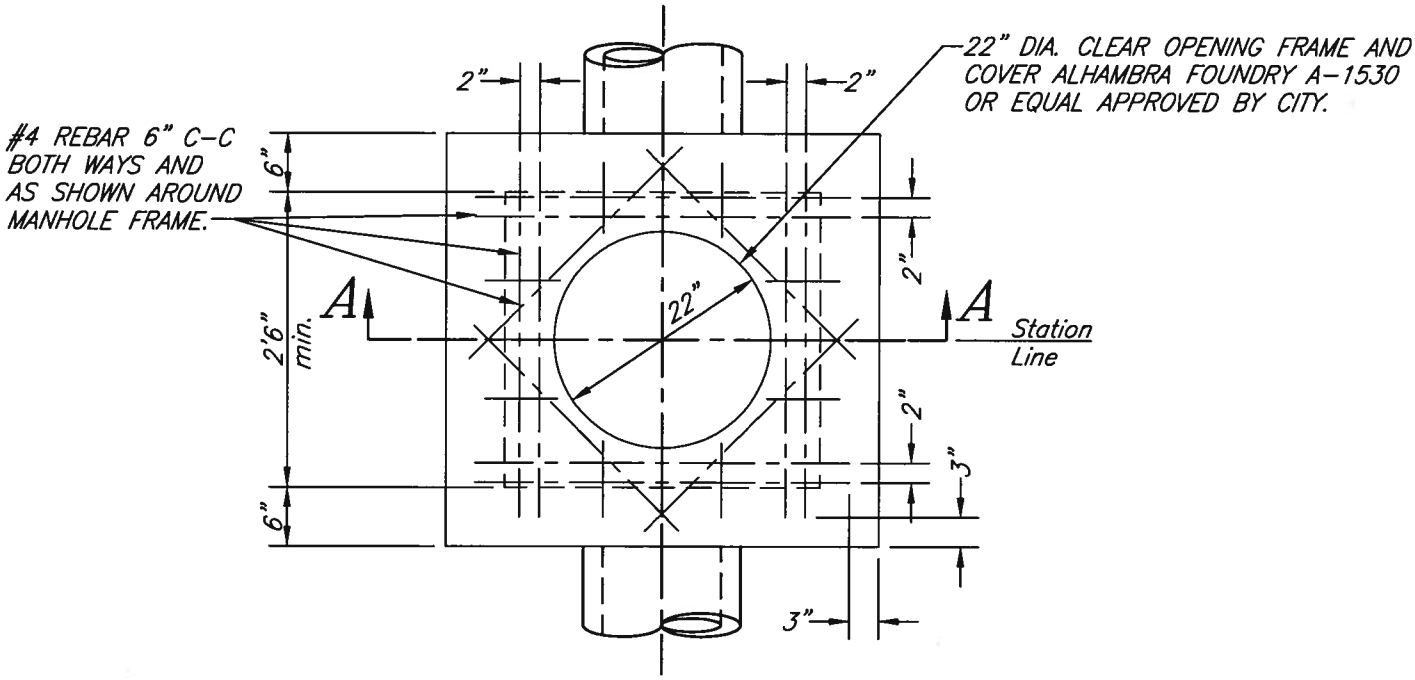

PLAN VIEW

NOTES:

1. Class 560-C-3250 Concrete to be used.
2. Pipe size and inlet and outlet flow line elevations to be shown on improvement plan.
3. When pipe sizes greater than 18" are used a larger frame and cover may be required by the City Engineer.
4. V is a maximum of 4'. For depths greater than 4' or for a vehicular traffic situation use Std. Dwgs. 430 or 431.
5. Bike proof grating shall be used instead of solid cover when shown on plans.

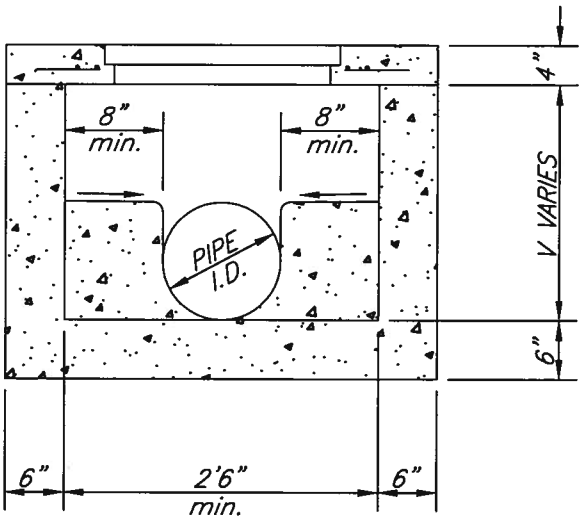

SECTION A-A

APPROVED BY

CITY ENGINEER

DATE 5/18/11

MARK	REVISIONS	APPR.	DATE

CITY OF RIVERSIDE

PUBLIC WORKS DEPARTMENT

CLEANOUT BOX

STANDARD DRAWING NO. 425

Sheet 1 of 1

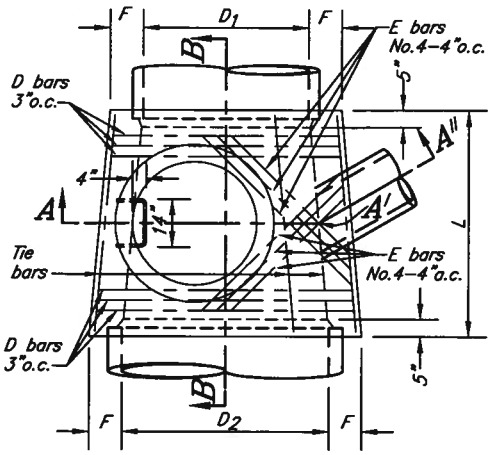

PLAN VIEW
(Shaft not shown)

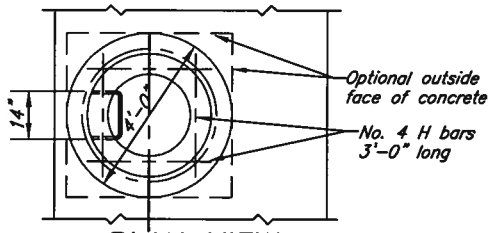

PLAN VIEW
(Rings and Cover not shown)

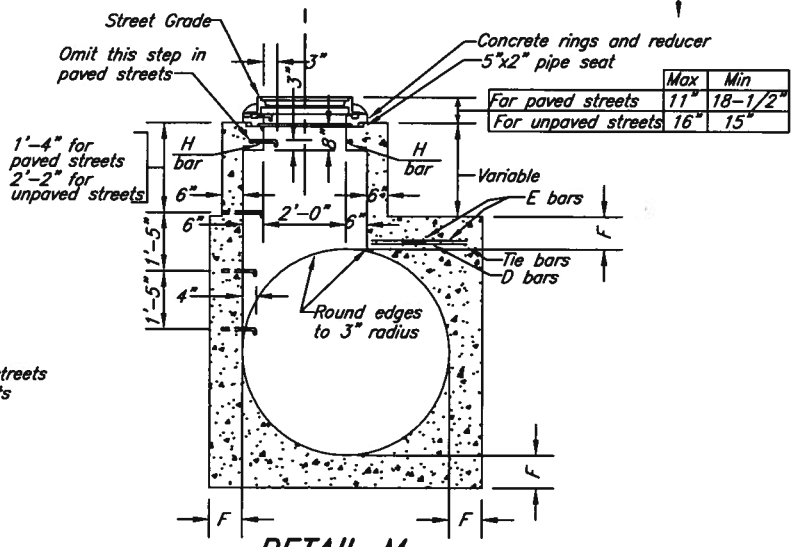

	Max	Min
For paved streets	11"	18–1/2"
For unpaved streets	16"	15"

DETAIL M
(See Note 4)

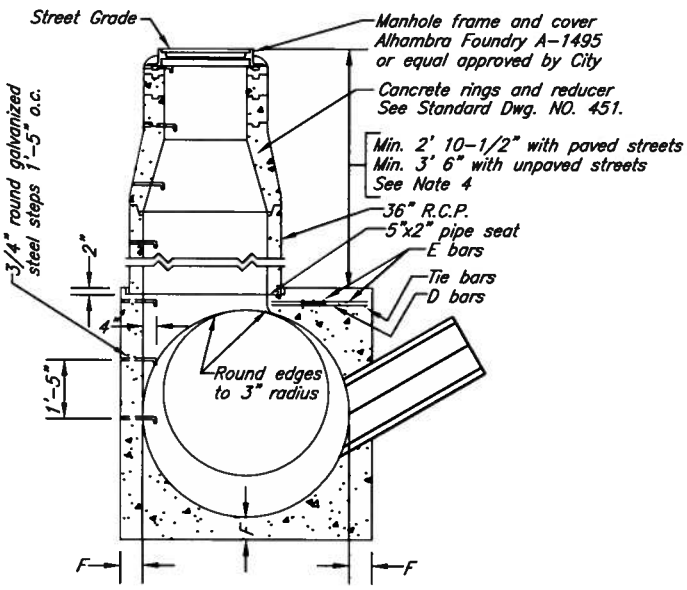

SECTION A–A'–A"

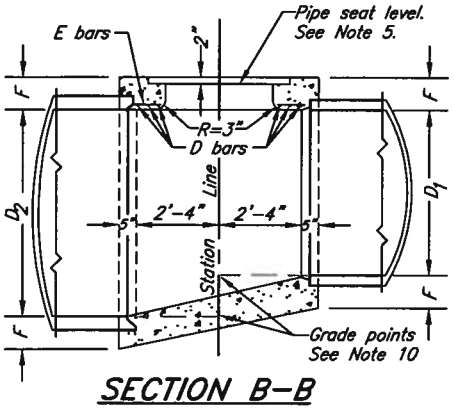

SECTION B–B

TABLE OF VALUES FOR F	
D_2	F
36"	6–1/2"
39"	7"
42"	7–1/2"
45"	7–3/4"
48"	8"
51"	8–1/2"
54"	9"
57"	9–1/4"
60"	9–1/2"
63"	10"
66"	10–1/4"
69"	10–3/4"
72"	11"
78"	11–3/4"
84"	12–1/2"
90"	13–1/4"
96"	14"

APPROVED BY
CITY ENGINEER — DATE 5/18/11

MARK	REVISIONS	APPR.	DATE

CITY OF RIVERSIDE
PUBLIC WORKS DEPARTMENT

MANHOLE AX

STANDARD DRAWING NO. 430
Sheet 1 of 2

NOTES

1. TABLE of values for F are on this Standard Drawing, Sheet 1.
2. CENTER OF MANHOLE SHAFT shall be located over center of line of storm drain when diameter D_1 is 48" or less, in which case place E bars symmetrically around shaft at 45° with center line.
3. LENGTH L shall be 5'-6" unless shown otherwise on improvement plan. At option of Contractor L may be increased or location of manhole shifted to meet pipe ends.
4. DETAIL M: When depth of manhole from street grade to top of box is less than 2' 10-1/2" for paved streets or 3'-6" for unpaved streets, construct monolithic shaft as per Detail M. The Contractor shall have the option of constructing shaft as per Detail M for any depth of manhole. When diameter D_1 is 48" or less, center of shaft shall be located as per Note 2.
5. THICKNESS OF DECK shall vary when necessary to provide level pipe seat, but shall not be less than tabular values for F shown on this plan.
6. REINFORCING STEEL shall be round, deformed bars, 1-1/2" clear from face of concrete unless shown otherwise. Sizes and lengths are shown in table below.
7. CONCRETE shall be in accordance with the table of Concrete Specifications.
8. STEPS shall be 3/4" round, galvanized steel and anchored not less than 6 inches in the walls of structure. Unless otherwise shown the spacing shall be 1'-5" on centers. The lowest step shall be not more than 2'-6" above the invert. (Alhambra Fdy A-3320 or equal approved by city.)
9. RINGS, REDUCER, AND PIPE for access shaft shall be seated in cement mortar and neatly pointed or wiped inside the shaft.
10. STATIONS of manholes shown on improvement plan apply at center of shaft. Elevations shown at stations refer to prolonged invert grade lines.
11. FLOOR of manhole shall be steel-troweled to springing line.
12. BODY of manhole shall be poured in one continuous operation, except that the Contractor shall have the option of placing at the springing line a construction joint with a longitudinal keyway.

STEEL TABLE FOR MANHOLE - AX						
D bars				E bars		
Dia. D_2	No. Req'd	Size	Length	No. Req'd	Size	Length
36"	6	No. 4	3'-10"	4	No. 4	2'-9"
39"	6	No. 4	4'-2"	4	No. 4	2'-11"
42"	6	No. 5	4'-6"	4	No. 4	3'-2"
45"	6	No. 5	4'-10"	4	No. 4	3'-5"
48"	6	No. 5	5'-1"	4	No. 4	3'-7"
51"	6	No. 5	5'-5"	6	No. 4	4'-9"
54"	6	No. 5	5'-9"	6	No. 4	5'-1"
57"	6	No. 5	6'-1"	6	No. 4	5'-6"
60"	6	No. 5	6'-4"	6	No. 4	5'-11"
63"	6	No. 5	6'-8"	6	No. 4	6'-3"
66"	6	No. 5	7'-0"	8	No. 4	6'-8"
69"	6	No. 5	7'-4"	8	No. 4	6'-8"
72"	6	No. 5	7'-7"	8	No. 4	6'-8"
78"	6	No. 5	8'-3"	8	No. 4	6'-8"
84"	6	No. 5	8'-10"	10	No. 4	6'-8"
90"	6	No. 6	9'-6"	10	No. 4	6'-8"
96"	6	No. 6	10'-1"	10	No. 4	6'-8"

CONCRETE SPECIFICATIONS	
F	CONC. CLASS
6 1/2"-7 1/2"	560-C-3250
7 3/4"-9 1/2"	560-C-3250
10" - 14"	560-B-3250

D bars shall be spaced 3" o.c. E bars shall be spaced 4" o.c. Tie bars shall be No. 3 spaced at 18" o.c. or closer.
When L greater than 5'-6" is specified on improvement plan, continue D bars at 6" o.c. Lengths shown in table are for longest bars. Where shorter bars are required, bend or cut to meet field requirements.

13- COVER shall have letter D in center.

(Adapted from the City of Los Angeles std. plan no. B-1700)

APPROVED BY

CITY ENGINEER

5/18/11
DATE

MARK	REVISIONS	APPR.	DATE

CITY OF RIVERSIDE
PUBLIC WORKS DEPARTMENT

MANHOLE AX

STANDARD DRAWING NO. 430

Sheet 2 of 2

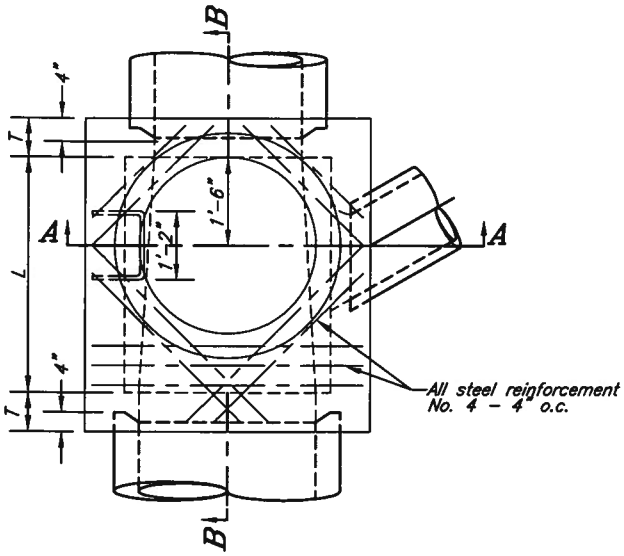

PLAN VIEW
(Shaft not shown)

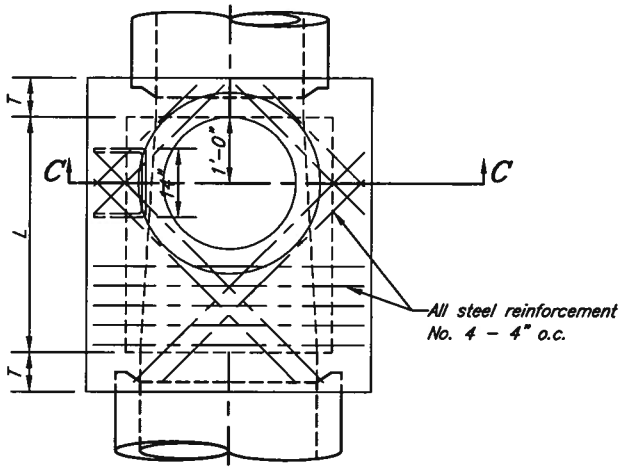

DETAIL N
PLAN VIEW
(Shaft not shown)
See Note M

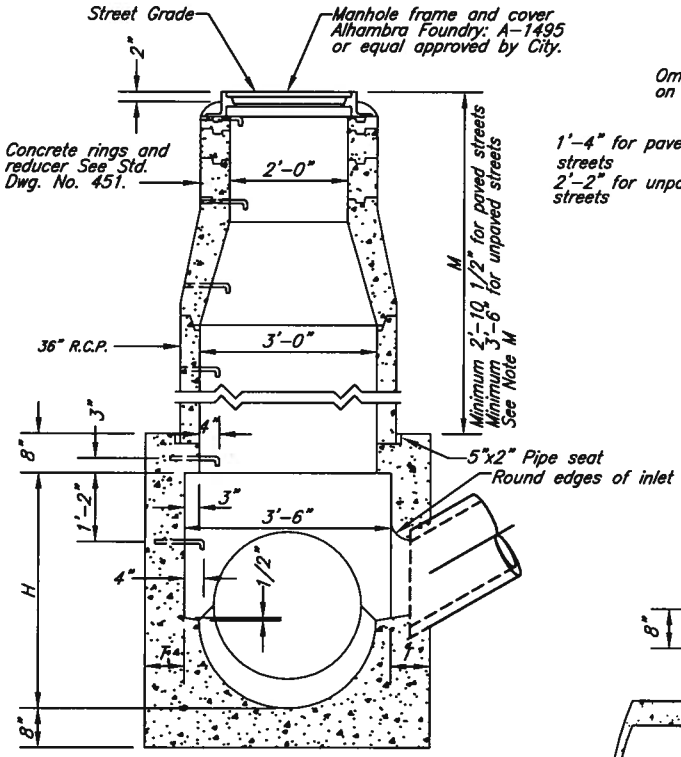

SECTION A-A

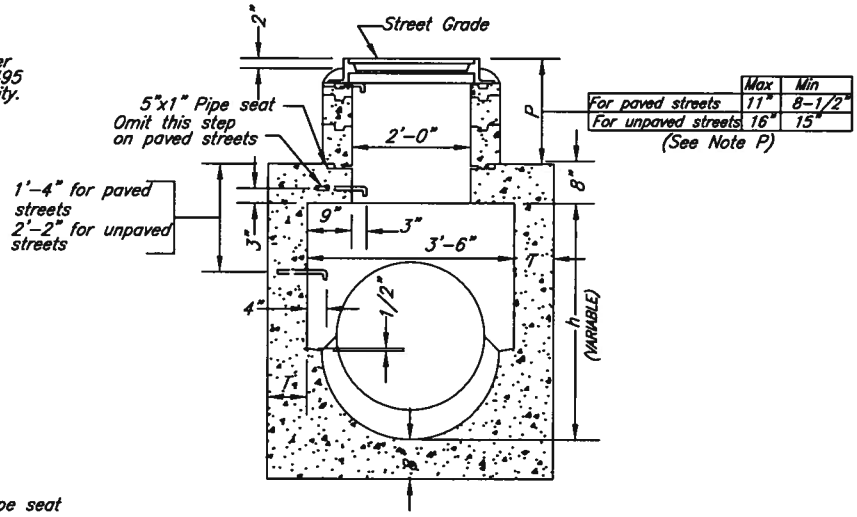

	Max	Min
For paved streets	11"	8-1/2"
For unpaved streets	16"	15"

(See Note P)

SECTION C-C

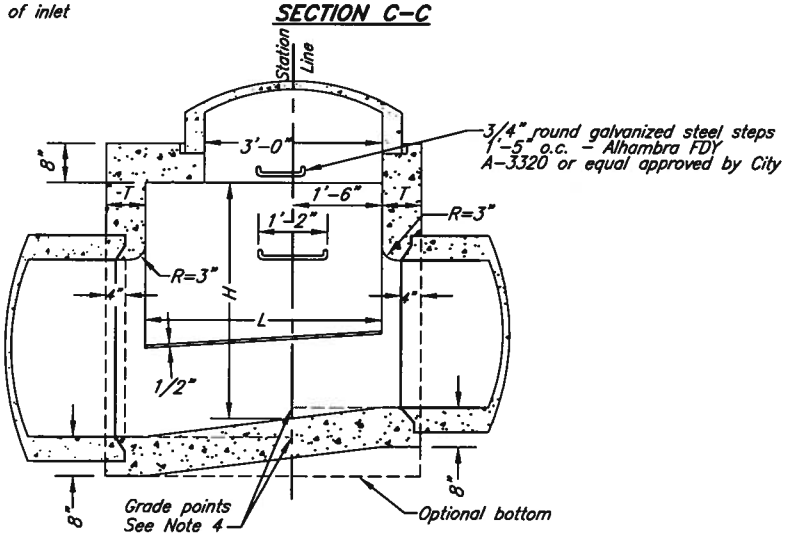

SECTION B-B

APPROVED BY

CITY ENGINEER — DATE 5/18/11

MARK	REVISIONS	APPR.	DATE

CITY OF RIVERSIDE

PUBLIC WORKS DEPARTMENT

MANHOLE EZ

STANDARD DRAWING NO. 431

Sheet 1 of 2

NOTES

H–HEIGHT H (in Section A–A and Section B–B) shall be not less than 4'–0", but may be increased at option of Contractor, provided that the value of M shall be not less that the minimum specified and that the reducer shall be used. For h in Section C–C) see Note P.

L–LENGTH L shall be 4' unless otherwise shown on improvement plan. L may be increased or location of manhole shifted to meet pipe ends, at the option of Contractor, except that any change in location of manhole must be approved by the City Engineer.

M–SHAFT shall be constructed as per Secton C–C and Detail N when depth M from street grade to top of box is less than 2'–10 1/2" for paved streets or 3'–6" for unpaved streets.

P–DEPTH P may be reduced to an absolute limit of 6 inches when larger values of P would reduce h (in Section C–C) to 3'–6" or less.

T – T shall be 8" for values of H up to and including 8 ft.
T shall be 10" for values of H over 8 feet.

1 – Steps shall be 3/4" round, galvanized steel and anchored not less than 6" in the walls of structure. Unless otherwise shown, steps shall be space 1'–5" on centers. The lowest step shall be not more than 2 ft above the ledge at side of manhole floor. (Alhambra Fdy A–3320 or equal approved by City.)

2 – CONCRETE shall be 560–C–3250.

3 – REINFORCING STEEL shall be No. 4 deformed, straight bars 1–1/2" clear from face of concrete.

4 – STATIONS of manholes shown on improvement plan apply at center line of shaft. Elevations are shown at shaft center and refer to the prolonged invert grade line. See Note L for shifting location.

5 – FLOOR of manhole shall be steel–troweled.

6 – RINGS, reducer, and pipe for access shaft shall be seated in cement mortar and neatly pointed or wiped inside shaft.

7 – COVER shall have letter D in center.

(Adapted from City of Los Angeles Std. Plan No. B–1532)

APPROVED BY

CITY ENGINEER — DATE 5/18/11

MARK	REVISIONS	APPR.	DATE

CITY OF RIVERSIDE
PUBLIC WORKS DEPARTMENT

MANHOLE EZ

STANDARD DRAWING NO. 431

Sheet 2 of 2

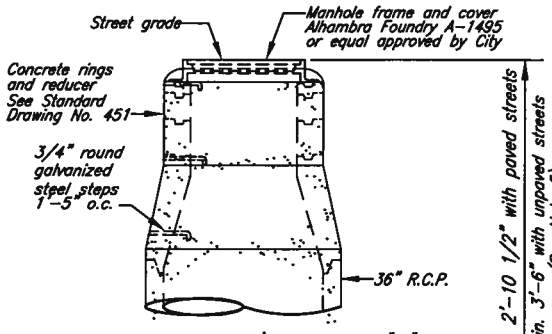

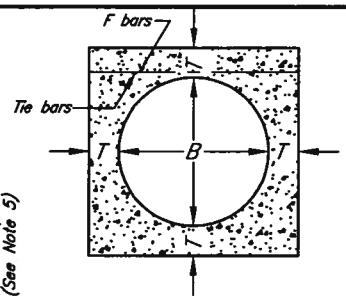

SECTION G-G

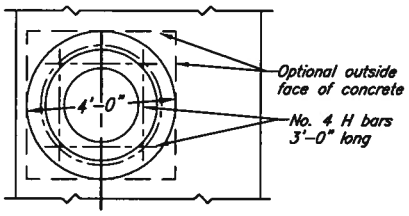

PLAN VIEW

(Rings and Cover not shown)

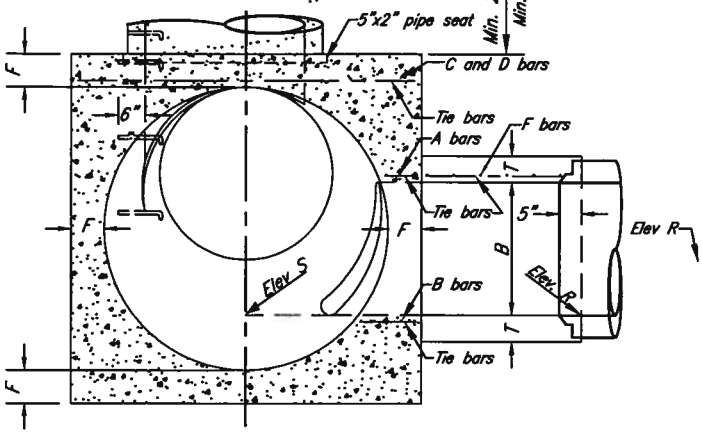

SECTION N-M-P-O

(Projected on P-P-O)

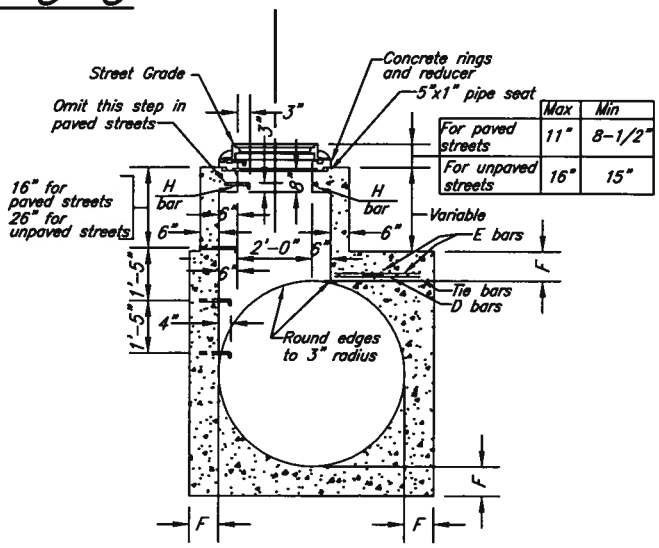

	Max	Min
For paved streets	11"	8-1/2"
For unpaved streets	16"	15"

DETAIL M

(See Note 5)

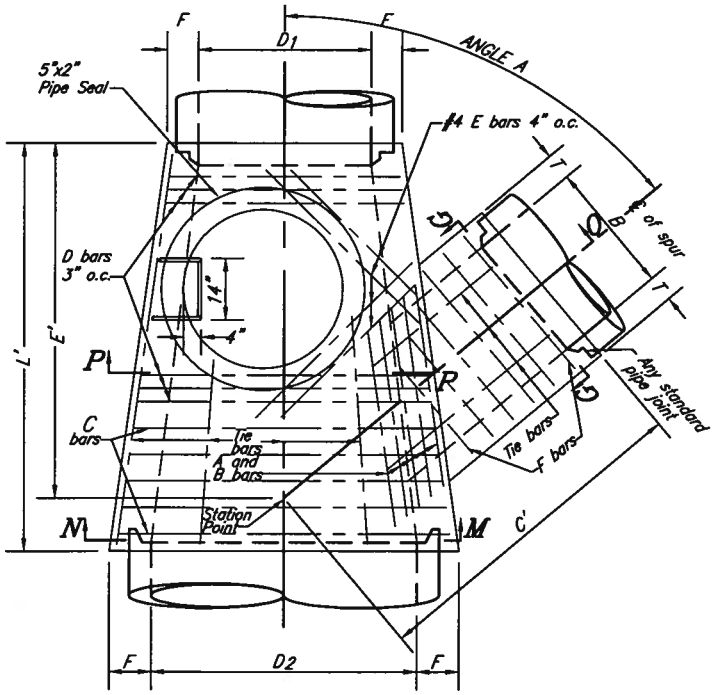

PLAN VIEW

(Shaft not shown)

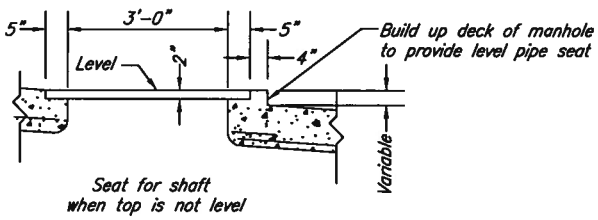

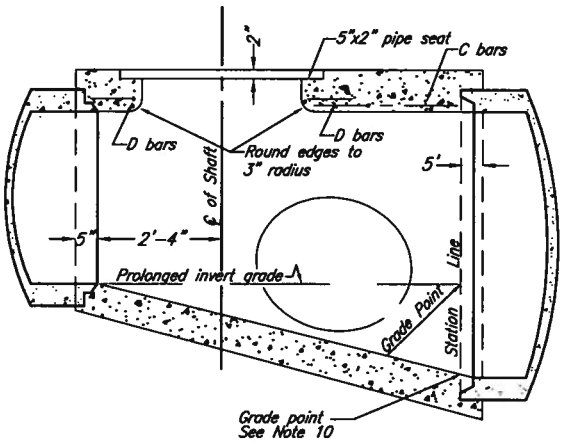

LONGITUDINAL SECTION

APPROVED BY

CITY ENGINEER — DATE 5/18/11

MARK	REVISIONS	APPR.	DATE

CITY OF RIVERSIDE

PUBLIC WORKS DEPARTMENT

MANHOLE JM

STANDARD DRAWING NO. 432

Sheet 1 of 3

NOTES

1 – VALUES for A, B, C', D_1, D_2, E', L', Elevation R, and Elevation S are shown on the improvement plan (see Sheet 3 of 3). TABLE of values for F and T hereon.

2 – LATERALS: If lateral enter on both sides of manhole, access shaft shall be located on side receiving the smaller lateral. Laterals shall be designated on improvement plan as right or left, facing in the direction of stationing.

3 – CENTER OF MANHOLE SHAFT shall be located over center line of main storm drain when D_1 is 48" or less, in which case place 4 E bars symmetrically around shaft at 45° with center line.

4 – LENGTH L (shown on improvement plan) may be increased at option of Contractor to meet pipe ends, but any change in location of spur must be approved by the City Engineer.

5 – DETAIL M: When depth of manhole from street grade to top of box is less than 2'–10 1/2" for paved streets or 3'–6" for unpaved streets, construct monolithic shaft as per Detail M. The Contractor shall have the option of constructing shaft as per Detail M for any depth of manhole. When diameter D_1 is 48" or less center of shaft shall be located as per Note 3.

6 – REINFORCING STEEL shall be round, deformed, straight bars, 1–1/2" clear from face of concrete unless shown otherwise. Tie bars shall be No. 3 and spaced 18" on centers or closer. Steel schedule detailed on improvement plan.

7 – CONCRETE shall be in accordance with the table of Concrete Specifications.

8 – STEPS shall be 3/4" round, galvanized steel and anchored not less than 6 inches in the walls of structure. Unless otherwise shown the spacing shall be 1'–5" on centers. The lowest step shall be not more than 2 feet above the invert. (Alhambra Foundry A–3320, or equal approve by City.

9 – RINGS, REDUCER, AND PIPE for access shaft shall be seated in cement mortar and neatly pointed or wiped inside shaft.

10 – STATIONS of manholes shown on improvement plan apply at intersection of center lines of main line and spur. Elevations shown at stations refer to prolonged invert grade lines.

11 – FLOOR of manhole shall be steel troweled to springing line.

12 – BODY OF manhole, including spur, shall be poured in one continuous operation, except that the Contractor shall have the option of placing at the springing line a construction joint with longitudinal keyway.

13 – ELEVATION "S" applies at center of main line on prolongation of invert of spur.

TABLE OF BAR SIZES

D_2 OR B	A & B BARS	C OR F BARS
12" – 39"	NO. 5 AT 3"	NO. 4 AT 6"
42" – 84"	NO. 6 AT 3"	NO. 5 AT 6"
90" – 144"	NO. 7 AT 3"	NO. 6 AT 6"

TABLE OF VALUES FOR F AND T

D_2	F	B	T
12"	4"	12"	4"
15"	4–1/4"	15"	4–1/4"
18"	4–1/2"	18"	4–1/2"
21"	5"	21"	5"
24"	5–1/4"	24"	5–1/4"
27"	5–1/2"	27"	5–1/2"
30"	6"	30"	6"
33"	6–1/4"	33"	6–1/4"
36"	6–1/2"	36"	6–1/2"
39"	7"	39"	7"
42"	7–1/2"	42"	7–1/2"
45"	7–3/4"	45"	7–3/4"
48"	8"	48"	8"
51"	8–1/2"	51"	8–1/2"
54"	9"	54"	9"
57"	9–1/4"	57"	9–1/4"
60"	9–1/2"	60"	9–1/2"
63"	10"	63"	10"
66"	10–1/4"	66"	10–1/4"
69"	10–3/4"	69"	10–3/4"
72"	11"	72"	11"
78"	11–3/4"		
84"	12–1/2"		
90"	13–1/4"		
96"	14"		

CONCRETE SPECS

T	CONCRETE CLASS
4" – 7"	560–C–3250
7 1/2" – 9 1/2"	560–C–3250
10" – 14"	560–B–3250

14 – COVER shall have letter D in center.

APPROVED BY

CITY ENGINEER — DATE 5/18/11

MARK	REVISIONS	APPR.	DATE

CITY OF RIVERSIDE

PUBLIC WORKS DEPARTMENT

MANHOLE JM

STANDARD DRAWING NO. 432

Sheet 2 of 3

STORM DRAIN MAIN

D/D2	ANGLE VALUE	30	40	50	60	70	80
12	C	2.2	1.8	1.6	1.5	1.4	1.3
	E	1.9	1.5	1.2	1.0	0.8	0.6
15	C	2.5	2.0	1.8	1.6	1.5	1.5
	E	2.2	1.7	1.3	1.1	0.9	0.7
18	C	2.8	2.3	2.0	1.8	1.7	1.6
	E	2.4	1.8	1.4	1.1	0.9	0.7
21	C	3.1	2.5	2.2	2.0	1.9	1.8
	E	2.7	2.0	1.6	1.2	1.0	0.7
24	C	3.4	2.7	2.4	2.2	2.0	2.0
	E	3.0	2.2	1.7	1.3	1.0	0.8
27	C	3.7	3.0	2.6	2.3	2.2	2.1
	E	3.2	2.4	1.8	1.4	1.1	0.8
30	C	4.0	3.2	2.8	2.5	2.4	2.3
	E	3.5	2.6	2.0	1.5	1.1	0.8
33	C	4.3	3.4	3.0	2.7	2.5	2.4
	E	3.8	2.8	2.1	1.6	1.2	0.8
36	C	4.6	3.7	3.2	2.9	2.7	2.6
	E	4.0	2.9	2.2	1.7	1.2	0.9
39	C	4.9	3.9	3.4	3.0	2.9	2.7
	E	4.3	3.1	2.4	1.8	1.3	0.9
42	C	5.3	4.2	3.6	3.2	3.0	2.9
	E	4.6	3.3	2.5	1.9	1.4	0.9
45	C	5.5	4.4	3.8	3.4	3.2	3.1
	E	4.9	3.5	2.6	2.0	1.4	0.9
48	C	5.8	4.6	4.0	3.6	3.3	3.2
	E	5.1	3.7	2.7	2.0	1.5	1.0
51	C	6.2	4.9	4.2	3.8	3.5	3.4
	E	5.4	3.9	2.9	2.1	1.5	1.0
54	C	6.5	5.2	4.4	4.0	3.7	3.5
	E	5.7	4.1	3.0	2.2	1.6	1.0
57	C	6.8	5.4	4.6	4.1	3.8	3.7
	E	5.9	4.2	3.1	2.3	1.6	1.1
60	C	7.1	5.6	4.8	4.3	4.0	3.8
	E	6.2	4.4	3.3	2.4	1.7	1.1
63	C	7.4	5.9	5.0	4.5	4.2	4.0
	E	6.5	4.6	3.4	2.5	1.8	1.1
66	C	7.7	6.1	5.2	4.7	4.3	4.2
	E	6.7	4.8	3.5	2.6	1.8	1.1
69	C	8.0	6.4	5.4	4.9	4.5	4.3
	E	7.0	5.0	3.7	2.7	1.9	1.2
72	C	8.3	6.6	5.6	5.0	4.7	4.5
	E	7.3	5.2	3.8	2.8	1.9	1.2
75	C	8.6	6.8	5.8	5.2	4.8	4.6
	E	7.5	5.3	3.9	2.8	2.0	1.2
78	C	9.0	7.1	6.0	5.4	5.0	4.8
	E	7.8	5.5	4.0	2.9	2.0	1.2
81	C	9.3	7.3	6.2	5.6	5.2	4.9
	E	8.1	5.7	4.2	3.0	2.1	1.3
84	C	9.6	7.6	6.4	5.7	5.3	5.1
	E	8.4	5.9	4.3	3.1	2.2	1.3
87	C	9.9	7.8	6.6	5.9	5.5	5.3
	E	8.6	6.1	4.4	3.2	2.2	1.3
90	C	10.2	8.1	6.8	6.1	5.7	5.4
	E	8.9	6.3	4.6	3.3	2.3	1.4
93	C	10.5	8.3	7.0	6.3	5.8	5.6
	E	9.2	6.5	4.7	3.4	2.3	1.4
96	C	10.8	8.5	7.2	6.5	6.0	5.7
	E	9.4	6.7	4.8	3.5	2.4	1.4

STORM DRAIN LATERAL

B	ANGLE VALUE	30	40	50	60	70	80
12	C	1.9	1.5	1.2	1.0	0.8	0.6
	E	2.2	1.8	1.6	1.5	1.4	1.3
15	C	2.2	1.7	1.3	1.1	0.9	0.7
	E	2.5	2.0	1.8	1.6	1.5	1.5
18	C	2.4	1.8	1.4	1.1	0.9	0.7
	E	2.8	2.3	2.0	1.8	1.7	1.6
21	C	2.7	2.0	1.6	1.2	1.0	0.7
	E	3.1	2.5	2.2	2.0	1.9	1.8
24	C	3.0	2.2	1.7	1.3	1.0	0.8
	E	3.4	2.7	2.4	2.2	2.0	2.0
27	C	3.2	2.4	1.8	1.4	1.1	0.8
	E	3.7	3.0	2.6	2.3	2.2	2.1
30	C	3.5	2.6	2.0	1.5	1.1	0.8
	E	4.0	3.2	2.8	2.5	2.4	2.3
33	C	3.8	2.8	2.1	1.6	1.2	0.8
	E	4.3	3.4	3.0	2.7	2.5	2.4
36	C	4.0	2.9	2.2	1.7	1.2	0.9
	E	4.6	3.7	3.2	2.9	2.7	2.6
39	C	4.3	3.1	2.4	1.8	1.3	0.9
	E	4.9	3.9	3.4	3.0	2.9	2.7
42	C	4.6	3.3	2.5	1.9	1.4	0.9
	E	5.3	4.2	3.6	3.2	3.0	2.9
45	C	4.9	3.5	2.6	2.0	1.4	0.9
	E	5.5	4.4	3.8	3.4	3.2	3.1
48	C	5.1	3.7	2.7	2.0	1.5	1.0
	E	5.8	4.6	4.0	3.6	3.3	3.2
51	C	5.4	3.9	2.9	2.1	1.5	1.0
	E	6.2	4.9	4.2	3.8	3.5	3.4
54	C	5.7	4.1	3.0	2.2	1.6	1.0
	E	6.5	5.2	4.4	4.0	3.7	3.5
57	C	5.9	4.2	3.1	2.3	1.6	1.1
	E	6.8	5.4	4.6	4.1	3.8	3.7
60	C	6.2	4.4	3.3	2.4	1.7	1.1
	E	7.1	5.6	4.8	4.3	4.0	3.8
63	C	6.5	4.6	3.4	2.5	1.8	1.1
	E	7.4	5.9	5.0	4.5	4.2	4.0
66	C	6.7	4.8	3.5	2.6	1.8	1.1
	E	7.7	6.1	5.2	4.7	4.3	4.2
69	C	7.0	5.0	3.7	2.7	1.9	1.2
	E	8.0	6.4	5.4	4.9	4.5	4.3
72	C	7.3	5.2	3.8	2.8	1.9	1.2
	E	8.3	6.6	5.6	5.0	4.7	4.5
75	C	7.5	5.3	3.9	2.8	2.0	1.2
	E	8.6	6.8	5.8	5.2	4.8	4.6
78	C	7.8	5.5	4.0	2.9	2.0	1.2
	E	9.0	7.1	6.0	5.4	5.0	4.8
81	C	8.1	5.7	4.2	3.0	2.1	1.3
	E	9.3	7.3	6.2	5.6	5.2	4.9
84	C	8.4	5.9	4.3	3.1	2.2	1.3
	E	9.6	7.6	6.4	5.7	5.3	5.1
87	C	8.6	6.1	4.4	3.2	2.2	1.3
	E	9.9	7.8	6.6	5.9	5.5	5.3

EXAMPLE:

Given:

$D_2 = 60''$

$B = 39''$

$A = 50°$

Find: C', E', L'

Solution:

1. Enter Storm Drain Main Table with the given D_2 & A:

   $C_M = 4.8ft.$ $E_M = 3.3ft.$

2. Enter Storm Drain Lateral Table with given B & A:

   $C_L = 2.4ft.$ $E_L = 3.4ft.$

3. $C' = C_M + C_L$

   $C' = 4.8\ ft. + 2.4\ ft. = 7.2\ ft.$

4. $E' = E_M + E_L$

   $E' = 3.3\ ft. + 3.4\ ft. = 6.7\ ft.$

5. $L' = E' + 1\ ft. =$

   $6.7\ ft. + 1\ ft. = 7.7\ ft.$

APPROVED BY

CITY ENGINEER

5/18/11

DATE

MARK	REVISIONS	APPR.	DATE

CITY OF RIVERSIDE

PUBLIC WORKS DEPARTMENT

MANHOLE JM

STANDARD DRAWING NO. 432

Sheet 3 of 3

NOTES

(1) THE MATERIAL AND FINISH SHALL CONFORM TO THE SPECIFICATIONS APPLICABLE THERETO.

(2) COVER SHALL FIT IN EITHER POSITION.

(3) FRAME & COVER SHALL BE SET TO SIDEWALK ELEVATIONS.

(4) WEIGHTS: FRAME – 25 POUNDS
COVER – 55 POUNDS

(5) THIS SQUARE FRAME AND COVER IS FOR REPLACEMENT USE ONLY.

(6) FRAME & COVER SHALL BE FITTED WITH TWO 3/8" DIA. STAINLESS STEEL ALLEN BOLTS FOR LOCKING PURPOSES. BOLT HEADS SHALL BE SET FLUSH WITH TOP OF FRAME & COVER.

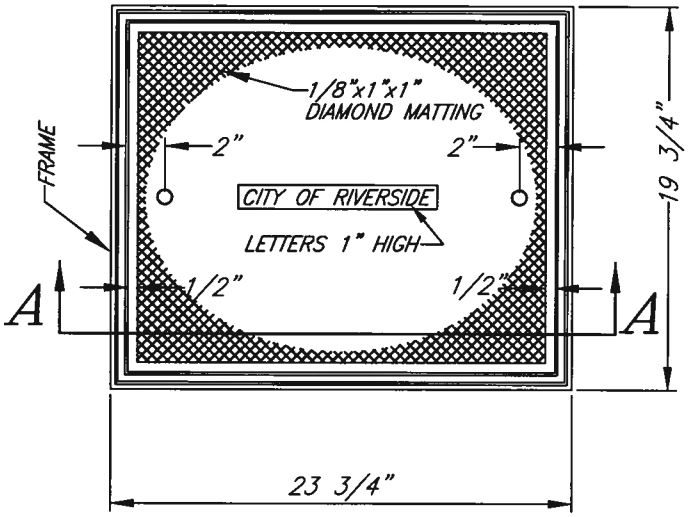

FRAME AND COVER PLAN

SECTION A–A

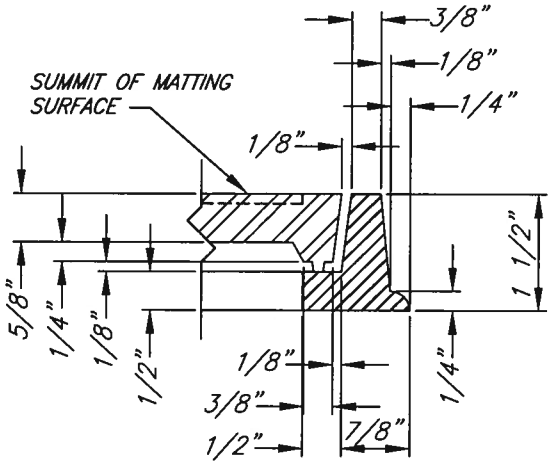

DETAIL OF FRAME AND COVER CONNECTION

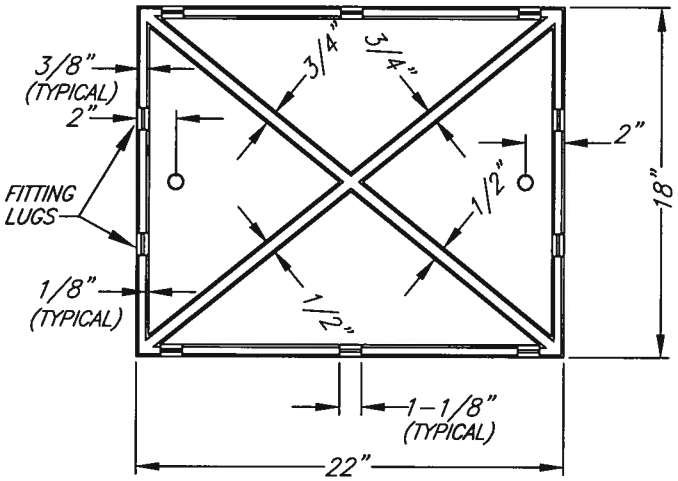

BOTTOM PLAN OF COVER

APPROVED BY			
CITY ENGINEER		DATE 5/18/11	
MARK	REVISIONS	APPR.	DATE

CITY OF RIVERSIDE
PUBLIC WORKS DEPARTMENT

CATCH BASIN
FRAME AND COVER

STANDARD DRAWING NO. 450

Sheet 1 of 1

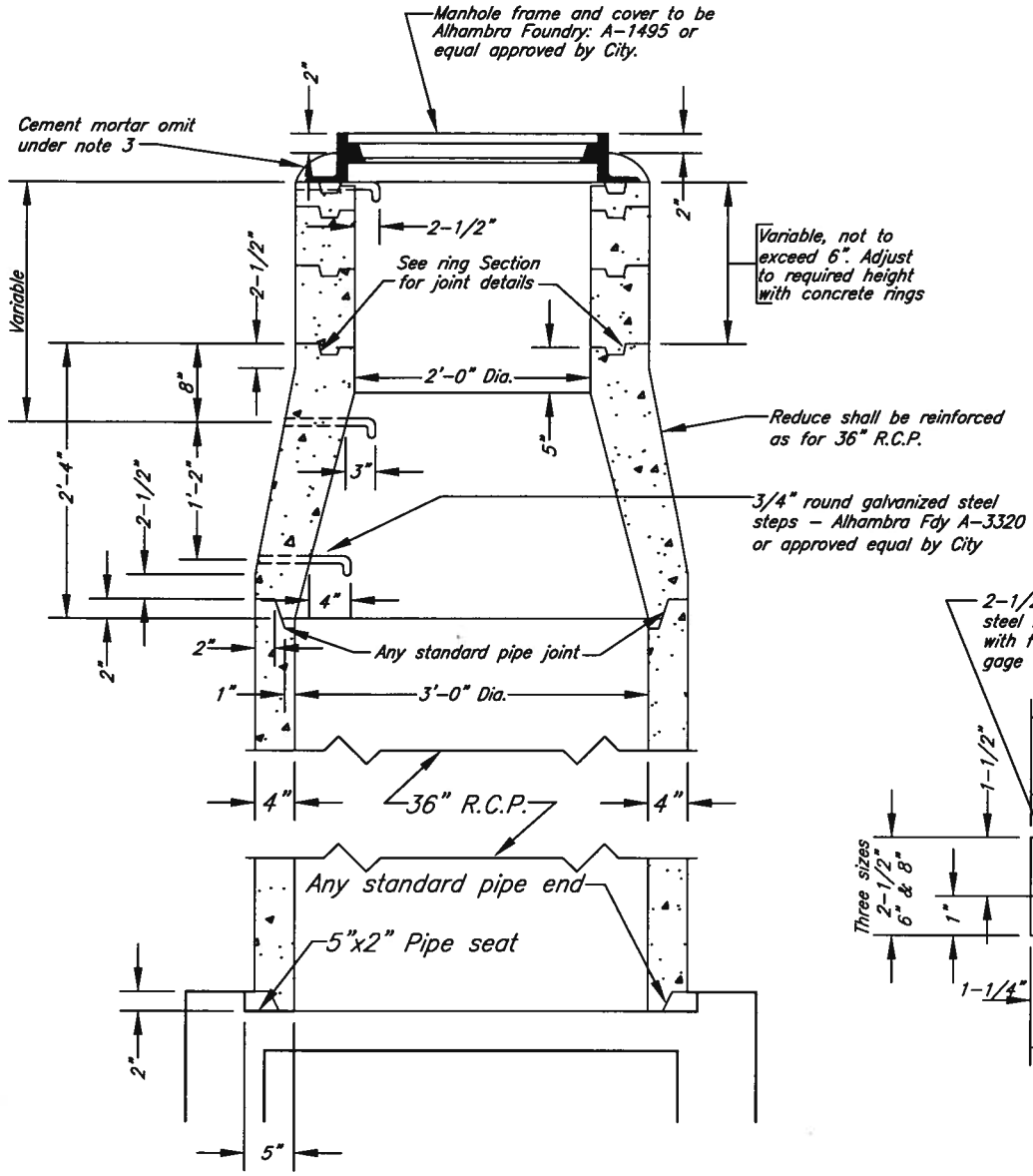

VERTICAL SECTION of MANHOLE SHAFT

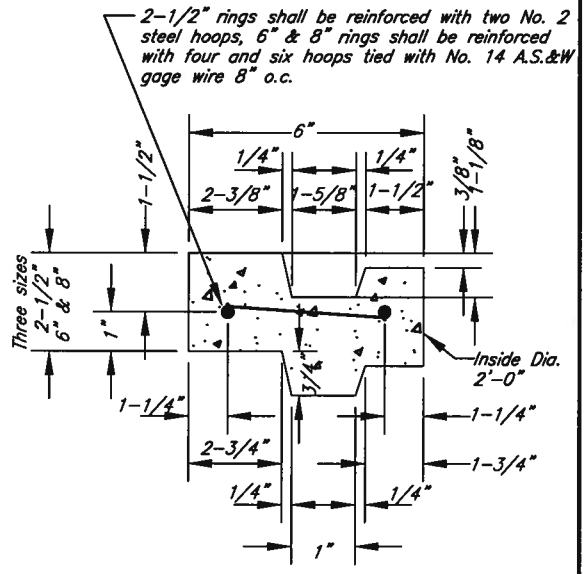

CROSS SECTION of CONCRETE RING

NOTES

1 - CONCRETE for poured units shall be 560-D-3250.
2 - JOINTS shall be filled with cement mortar and neatly pointed or wiped on inside of shaft.
3 - COLLAR of cement mortar around cover frame shall be omitted in rock and oil streets and in paved streets.
4 - CONCRETE RINGS shall be of the dimensions shown and reinforced as shown hereon.
5 - STEPS shall be 3/4" round galvanized steel. Top step shall be placed directly beneath the manhole cover from with legs extending into wall of shaft on radial lines. Width of all steps shall be 1'-2" between leg centers. Except where shown otherwise, spacing of steps in shaft shall be 1'-5" between centers. (Alhambra Foundry A-3320 or equal approved by City.
6 - CENTRIFUGALLY SPUN UNITS may be used at the option of the contractor, conforming to specifications for Centrifugal Concrete Pipe and to Detail C on Sheet 2.
7 - LENGTH of sections of 36" R.C.P. for manhole shaft may be 1'-0", 2'-0", 3'-0" or 4'-0" at the option of the Contractor.
8 - COVER shall have letter D in center.

APPROVED BY
CITY ENGINEER — DATE 5/18/11

MARK	REVISIONS	APPR.	DATE

CITY OF RIVERSIDE
PUBLIC WORKS DEPARTMENT

CONCRETE RINGS, REDUCER, & PIPE FOR MANHOLE SHAFT

STANDARD DRAWING NO. 451

Sheet 1 of 2

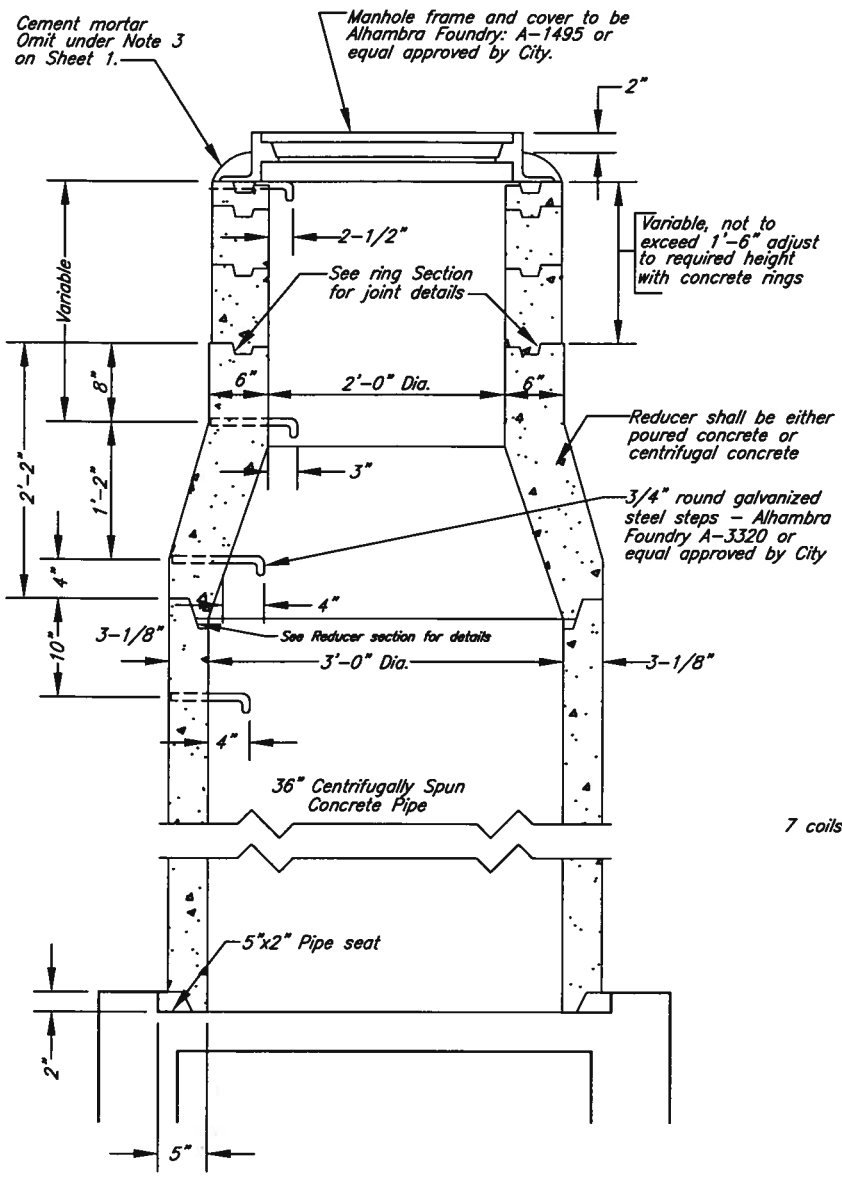

DETAIL C

VERTICAL SECTION of MANHOLE SHAFT

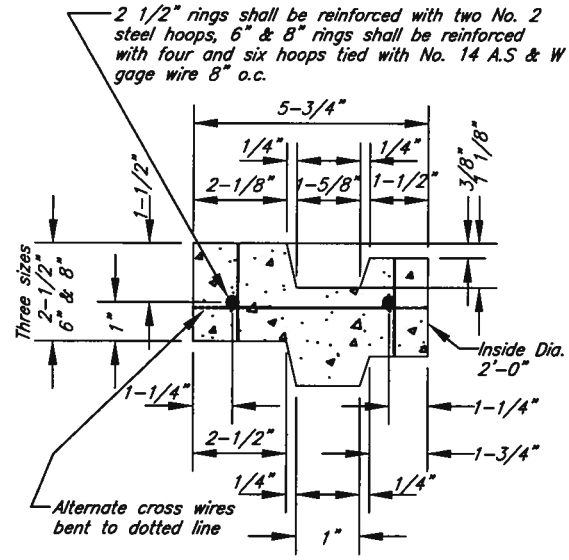

CROSS SECTION of CONCRETE RING

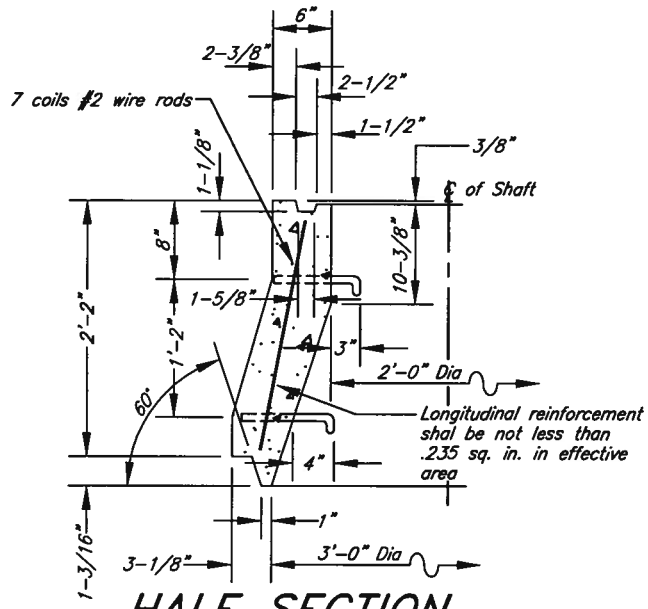

HALF SECTION of REDUCER

(For use with Centrifugally Spun Concrete Pipe)

NOTES

DETAIL C shall apply when centrifugally spun concrete pipe and rings are used in manhole shaft, as per Note 6 on Sheet 1.

TRANSVERSE REINFORCING STEEL for 36" centrifugally spun concrete pipe shall consist of coils of No. 2 rods spaced 4" c.c. or closer.

LOADING TEST is not required for centrifugally spun concrete pipe used for manhole shaft.

LENGTH of pipe sections for manhole shaft may be 1'-2", 2'-6", or 3'-10 3/4" at the option of the Contractor.

ADDITIONAL NOTES for Detail C are shown on sheet 1 of 2.

COVER shall have letter D in Center.

APPROVED BY			
CITY ENGINEER		DATE 5/18/11	
MARK	REVISIONS	APPR.	DATE

CITY OF RIVERSIDE

PUBLIC WORKS DEPARTMENT

CONCRETE RINGS, REDUCER, & PIPE FOR MANHOLE SHAFT

STANDARD DRAWING NO. 451

Sheet 2 of 2

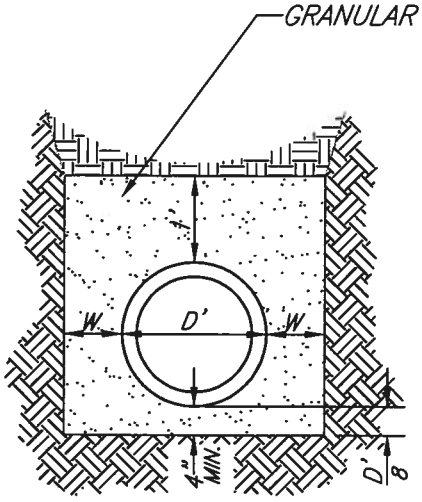

CASE I

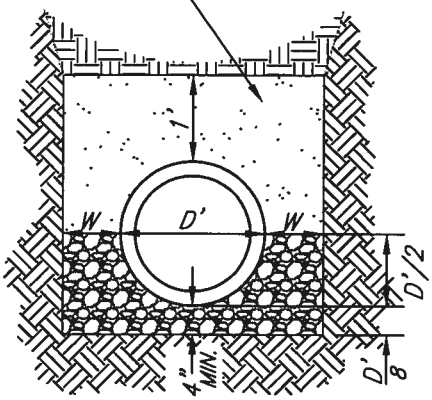

CASE II

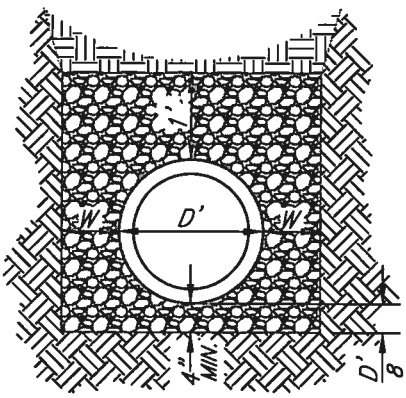

CASE III

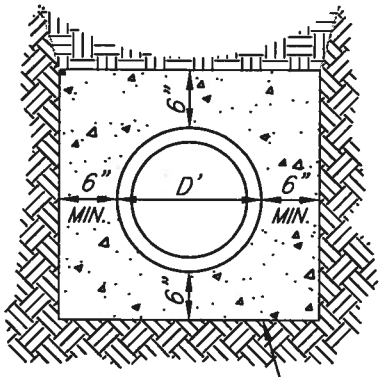

SUPPORT PIPE ON CONCRETE BLOCKS

CASE IV

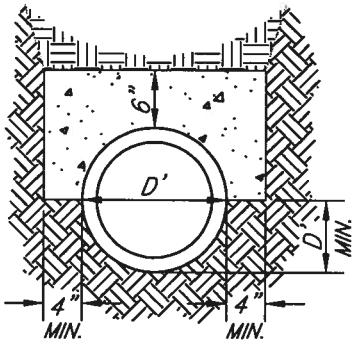

CASE V

(FOR EXISTING PIPE)

CASE	LOAD FACTOR
I	1.5
II	1.9
III	2.2
IV	4.5
V	2.6*

RIGID PIPE DESIGN DATA
*SEE NOTE 5

PIPE	COVER	W	
		MAX	MIN
VCP 12" & UNDER	> 8'	8"	6"
VCP 15" & OVER	> 8'	12"	6"
OTHERS	> 8'	10"	6"
ALL	< 8'	12"	6"

LEGEND

- PCC BEDDING
- GRANULAR MATERIAL
- 3/4" CRUSHED ROCK PER SECTION 200-1.2 OF THE STANDARD SPEC.
- BACKFILL
- NATIVE SOIL

APPROVED BY

CITY ENGINEER — DATE 5/18/11

MARK	REVISIONS	APPR.	DATE

CITY OF RIVERSIDE

PUBLIC WORKS DEPARTMENT

PIPE BEDDING

STANDARD DRAWING NO. 452

Sheet 1 of 2

NOTES FOR PIPE BEDDING

1. GRANULAR MATERIAL SHALL BE SAND, GRAVEL, DISINTEGRATED GRANITE, CRUSHED SLAG, CRUSHED AGGREGATE OR NATIVE SOIL WITH A SAND EQUIVALENT OF NOT LESS THAN 30. FOR ALL PLASTIC PIPE, EXCEPT ABS OR PVC COMPOSITE PIPE, BEDDING MATERIAL SHALL BE CRUSHED ROCK AS PER SECTION 200-1.2 OF THE STANDARD SPECIFICATIONS FOR 1/2-INCH ROCK.

2. WHERE GROUND WATER IS ENCOUNTERED IN THE TRENCH, THE CONTRACTOR SHALL, AT THE DIRECTION OF THE CITY ENGINEER, EXCAVATE TO A DEPTH OF 6-INCHES BELOW THE PROPOSED PIPE AND PLACE A BEDDING OF 3/4-INCH CRUSHED ROCK OR CRUSHED SLAG. IF THE GROUND WATER IS MORE THAN 3-INCHES ABOVE THE FLOW LINE OF PIPE, THE CONTRACTOR SHALL CONSTRUCT CONCRETE BARRIERS 3-FEET WIDE, IN 25-FOOT INTERVALS, UNDER THE PIPE TO PREVENT THE FLOW OF WATER THROUGH THE CRUSHED BEDDING MATERIAL.

3. CONCRETE SHALL CONFORM TO SECTION 201-1.1.2 OF THE LATEST EDITION OF STANDARD SPECIFICATIONS FOR PUBLIC WORKS CONSTRUCTION.

4. TRENCH WALLS SHALL BE VERTICAL WITHIN THE BEDDING AREA, UNLESS IMPROVED BEDDING, AS APPROVED BY THE CITY ENGINEER, IS USED.

5. THE LOAD FACTOR MAY BE INCREASED FOR CASE IV BY USE OF REINFORCING STEEL. THE LOAD FACTOR IS 3.2 FOR P=0.4%, 4.6 FOR P=1.0%, IN WHICH P IS THE RATIO OF THE AREA OF STEEL TO THE AREA OF CONCRETE ABOVE THE CROWN OF THE PIPE.

APPROVED BY

CITY ENGINEER — DATE 5/18/11

MARK	REVISIONS	APPR.	DATE

CITY OF RIVERSIDE

PUBLIC WORKS DEPARTMENT

PIPE BEDDING

STANDARD DRAWING NO. 452

Sheet 2 of 2

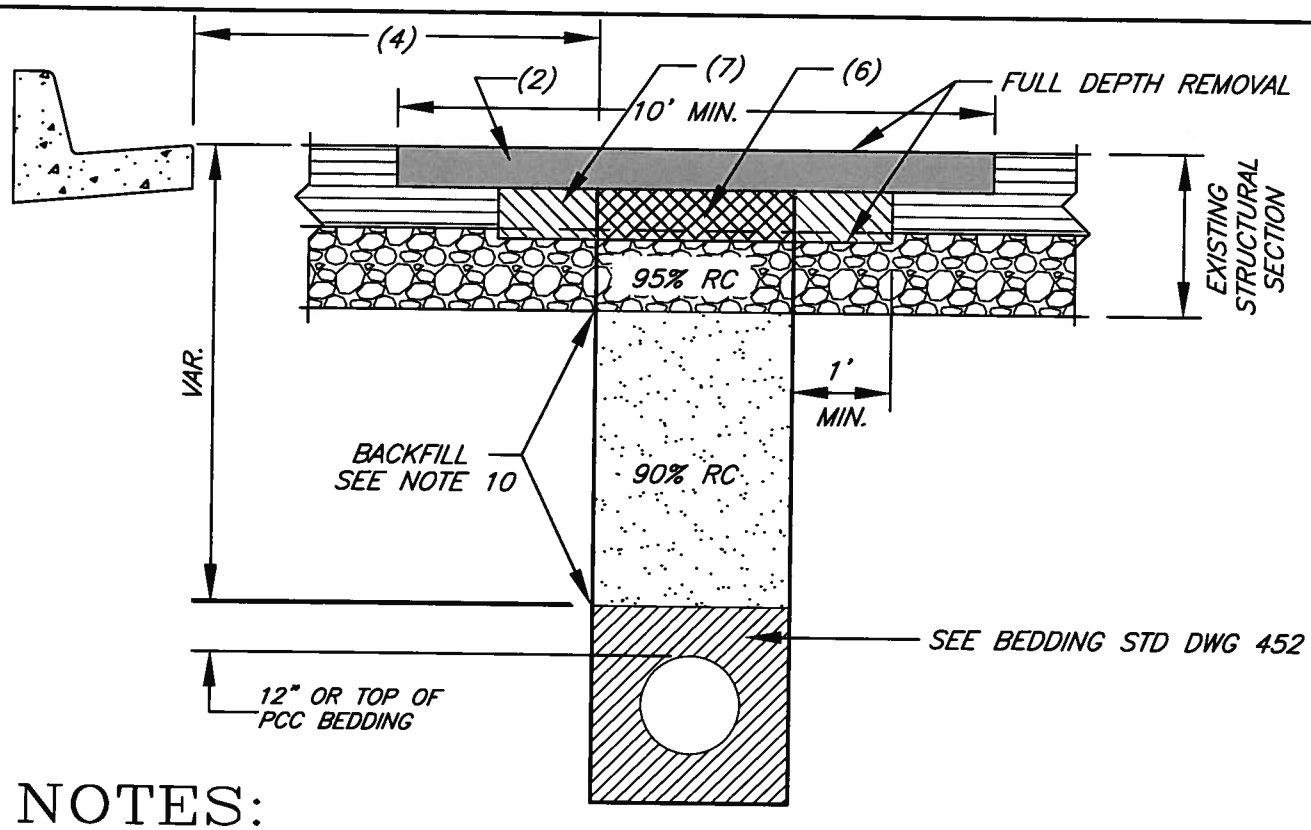

NOTES:

1. NO TRENCHING, CUTTING, POTHOLING, GRINDING OR CORING WILL BE ALLOWED, EXCEPT FOR EMERGENCIES OR TO PROVIDE SERVICE CONNECTIONS, IF THE STREET HAS BEEN PAVED OR RESURFACED WITHIN THE PREVIOUS THREE YEARS.

2. WHEN TRENCHING OR CUTTING INTO ANY STREET, FULL LANE WIDTH (10 FEET WIDE MINIMUM) ASPHALT CONCRETE (AC) PAVEMENT REPLACEMENT, AC COLD MILLING (0.10 FEET THICK) AND AC OVERLAY, SHALL BE REQUIRED, REPLACEMENT OF MULTIPLE LANES SHALL BE REQUIRED WHEN WORK AFFECTS MORE THAN ONE LANE. ALTERNATELY, AT THE DISCRETION OF THE CITY ENGINEER, COLD MILL OR GRIND EXISTING ASPHALT CONCRETE PAVEMENT TO A DEPTH OF 0.10 FEET WITHIN THE TRENCH AREAS AND TO AT LEAST 1 FOOT BEYOND THE EDGES OF THE TRENCH, AND SLURRY SEAL THE ENTIRE STREET WIDTH, GUTTER LIP TO GUTTER LIP OR EDGE OF PAVEMENT AS APPLICABLE.

3. WHERE MULTIPLE EXCAVATIONS, TRENCHES, POT HOLES OR EXPLORATORY HOLES OCCUR WITHIN THE SAME BLOCK, COLD MILLING WILL BE REQUIRED TO CONNECT THESE AREAS FOR A UNIFORM AND CONTINUOUS CAP THE ENTIRE LENGTH OF THE BLOCK.

4. IF THE TRENCH EDGE IS 4 FEET OR LESS FROM THE GUTTER LIP, CURB FACE OR EXISTING TRENCH EDGE OF PAVEMENT THE EXISTING AC PAVEMENT BETWEEN THE TRENCH AND THE GUTTER LIP, CURB FACE OR EXISTING EDGE OF PAVEMENT SHALL BE REMOVED AND REPLACED AS PART OF THE TRENCH BACKFILL, OR AS DIRECTED BY THE ENGINEER.

5. FOR A TRENCH PERPENDICULAR TO THE STREET, COLD MILLING OR GRINDING OF AC PAVEMENT SHALL BE A MINIMUM FULL LANE WIDTH UP TO THE FULL STREET WIDTH. THE LONGITUDINAL LENGTH SHALL BE MINIMUM 40 FEET OR AS DIRECTED BY THE ENGINEER.

6. REPLACEMENT AC PAVEMENT SHALL BE 1 INCH GREATER THAN EXISTING AC PAVEMENT THICKNESS OR 5 INCHES THICK WHICHEVER IS GREATER.

7. ADDITIONAL REPLACEMENT OF AC STRUCTURAL SECTION WILL BE REQUIRED WHERE EXISTING AC THICKNESS IS LESS THAN 3 INCHES, A MINIMUM OF 1 FOOT OUTSIDE OF THE TRENCH, AS COVERED IN NOTE 6 ABOVE.

APPROVED BY

CITY ENGINEER — DATE 5/18/11

MARK	REVISIONS	APPR.	DATE

CITY OF RIVERSIDE

PUBLIC WORKS DEPARTMENT

TRENCH BACKFILL

STANDARD DRAWING NO. 453

Sheet 1 of 2

NOTES:

8. ALL CAP AC PAVEMENT SHALL BE ARHM-GG-C OR ARHM-GG-B AND IS SUBJECT TO THE ENGINEERS APPROVAL. AC USED FOR PERMANENT RESURFACING SHALL BE B-PG 64-10 FOR THE BASE COURSE AND C2-PG 64-10 FOR THE CAP WHERE RUBBERIZED ASPHALT IS NOT REQUIRED. ALL AC MIXES ARE SUBJECT TO APPROVAL BY THE ENGINEER

9. ALL AC PAVEMENT REPLACEMENT SHALL HAVE SQUARE AND UNIFORM EDGE(S) THROUGHOUT AS DIRECTED BY THE ENGINEER.

10. BACKFILL REQUIREMENTS SHALL BE AS SPECIFIED IN SECTION 306 OF THE MOST CURRENT EDITION OF THE "STANDARD SPECIFICATIONS FOR PUBLIC WORKS STANDARDS". CONTRACTOR SHALL PROVIDE TO THE ENGINEER COMPACTION TEST RESULTS CERTIFIED BY AN APPROVED CIVIL OR SOILS ENGINEER FOR ALL WORK DONE INCLUDING AC PAVEMENT. WHERE NO SURFACE IMPROVEMENTS EXIST, THE TOP OF BACKFILL SHALL BE FLUSH WITH THE EXISTING SURFACE AND 90% RELATIVE COMPACTION SHALL EXTEND TO THE SURFACE. CONTROLLED LOW STRENGTH MATERIAL (CLSM) MAY BE ALLOWED FOR SUB-GRADE BACKFILL IF APPROVED BY THE ENGINEER. ALL COSTS FOR TESTING SHALL BE BORNE BY THE CONTRACTOR.

11. TRENCHES SHALL BE PAVED WITH TEMPORARY AC PAVEMENT IMMEDIATELY FOLLOWING WORK. ALL TEMPORARY ASPHALT SHALL BE A MINIMUM 3 INCHES THICK AND SHALL BE PROPERLY COMPACTED FLUSH WITH EXISTING PAVING USING A VIBRATORY ROLLER OR VIBRATORY PLATE. ALL TEMPORARY ASPHALT MUST BE KEPT UP DAILY AT THE CONTRACTOR'S EXPENSE. PERMANENT PAVING IS REQUIRED WITHIN 2 WEEKS OF EXCAVATION.

12. ALL MARKINGS MUST BE COMPLETELY REMOVED WITHOUT DAMAGING ANY SURFACES THAT HAVE BEEN MARKED.

13. ALL REQUIREMENTS IN THIS DRAWING APPLY TO TRENCHES AND EXCAVATIONS IN PUBLIC EASEMENTS, RIGHTS OF ENTRY, CITY PROPERTY AS WELL AS THOSE WITHIN STREET RIGHTS OF WAY.

14. PATCHES FOR SPOT REPAIRS, POTHOLES ETC., SHALL BE A MINIMUM OF 50 SF OR AS DIRECTED BY THE ENGINEER.

15. ALL OTHER TRENCH OR PATCH REPAIR METHODS MUST BE APPROVED BY THE CITY ENGINEER.

16. NO WORK WILL BE ALLOWED IN THE DOWNTOWN RIVERSIDE AREA BETWEEN THE DATES NOVEMBER 1 AND JANUARY 3. THE DOWNTOWN AREA WILL BE BOUNDED BY FIRST ST AND FIFTEENTH ST GOING NORTH AND SOUTH AND THE 91 FREEWAY AND BROCKTON AVE GOING EAST TO WEST. NO WORK WILL BE ALLOWED WITHIN 1000 FEET OF THE THE GALLERIA AT TYLER OR THE RIVERSIDE PLAZA DURING THE SAME TIME. ANY EXCEPTIONS MUST BE APPROVED BY THE CITY ENGINEER.

APPROVED BY

CITY ENGINEER — DATE 5/18/11

MARK	REVISIONS	APPR.	DATE

CITY OF RIVERSIDE

PUBLIC WORKS DEPARTMENT

TRENCH BACKFILL

STANDARD DRAWING NO. 453

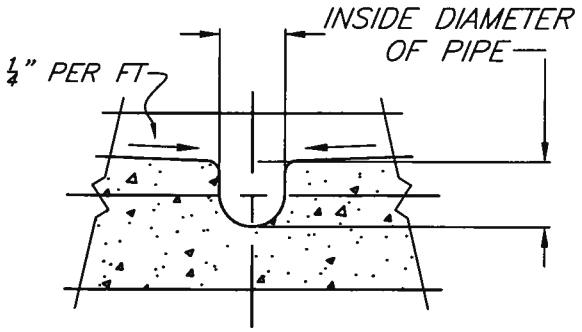

SECTION B–B

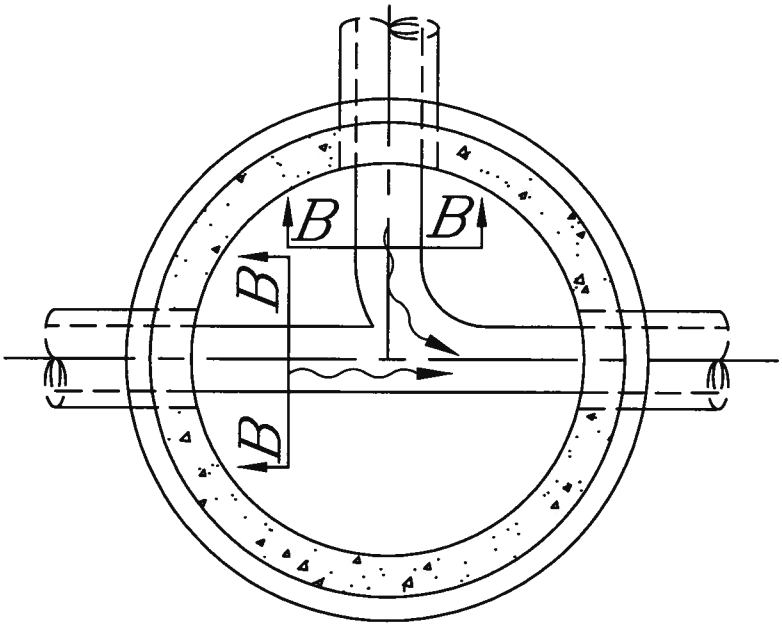

SECTION A–A

NOTES:

1. All joints shall be set in Class C Portland cement mortar and shall be sock finished.
2. Rings and cones shall be reinforced per ASTM C478.
3. Vertical wall of cone shall be on downstream side of manhole.
4. Steps shall be 14" wide stirrup type safety steps. The steps or sockets shall be cast in place at time of manufacture. Steps shall be spaced a maximum of 16" c.c.. Material for steps shall be 1/2" grade 60 steel reinforcing rod coated with polypropylene, ASTM D–4101 or City approved equal.
5. The lower portion of the manhole shall be:

Minimum Diameter	Depth (Shelf to cover)
4'	< 15'
5'	> 15' and < 25'
6'	> 25' and < 30'

A special designed manhole meeting Cal–OSHA specifications will be required for depths greater than 30'. The frame and cover shall be 3' diameter (Alhambra Foundry: A1251–6 or City approved equal) where the manhole diameter is greater than 4'. A 1' minimum shelf shall be maintained.

6. When manhole is in a street to be paved, manhole frame shall be set after adjacent pavement has been placed. Top shall be flush with pavement.
7. First pipe joint shall be no more than 1' from manhole.
8. At the contractor's option, thickness of manhole wall may be 4–1/8" provided class 560–D–4000 concrete is used.
9. Cover shall have letter S in center.

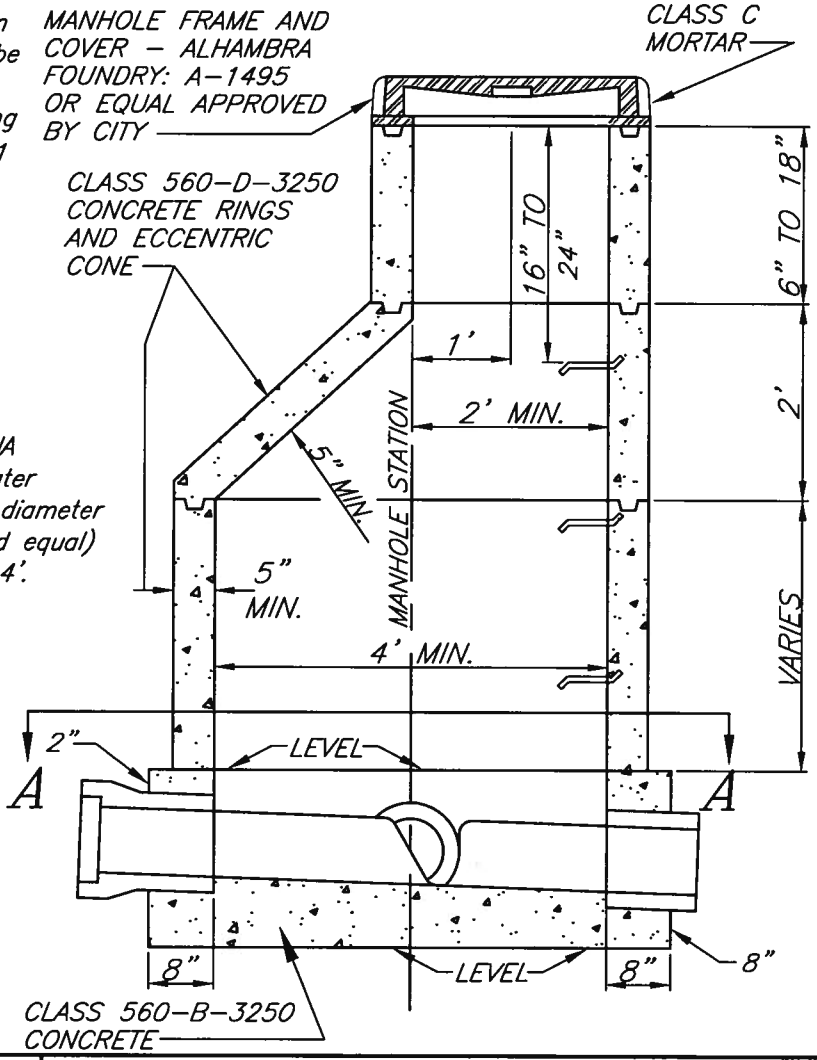

APPROVED BY

CITY ENGINEER — DATE 5/18/11

MARK	REVISIONS	APPR.	DATE

CITY OF RIVERSIDE

PUBLIC WORKS DEPARTMENT

PRECAST CONCRETE SEWER MANHOLE

STANDARD DRAWING NO. 500

Sheet 1 of 1

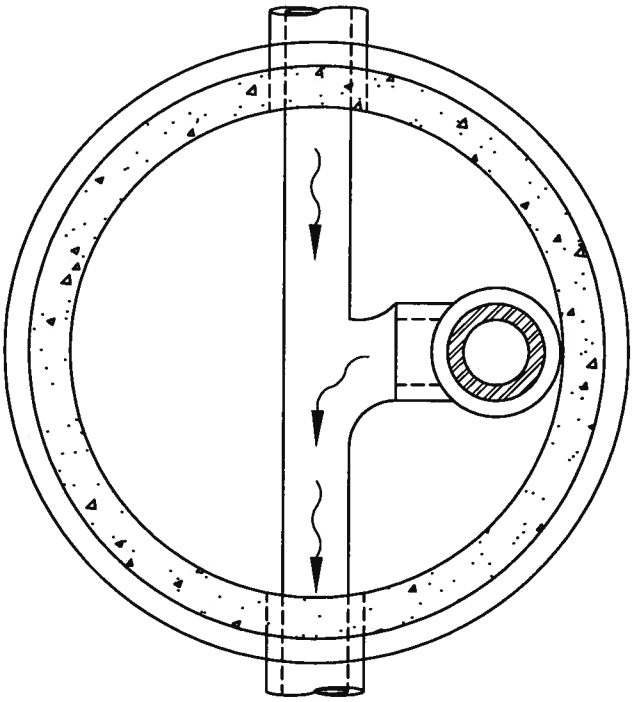

SECTION A–A

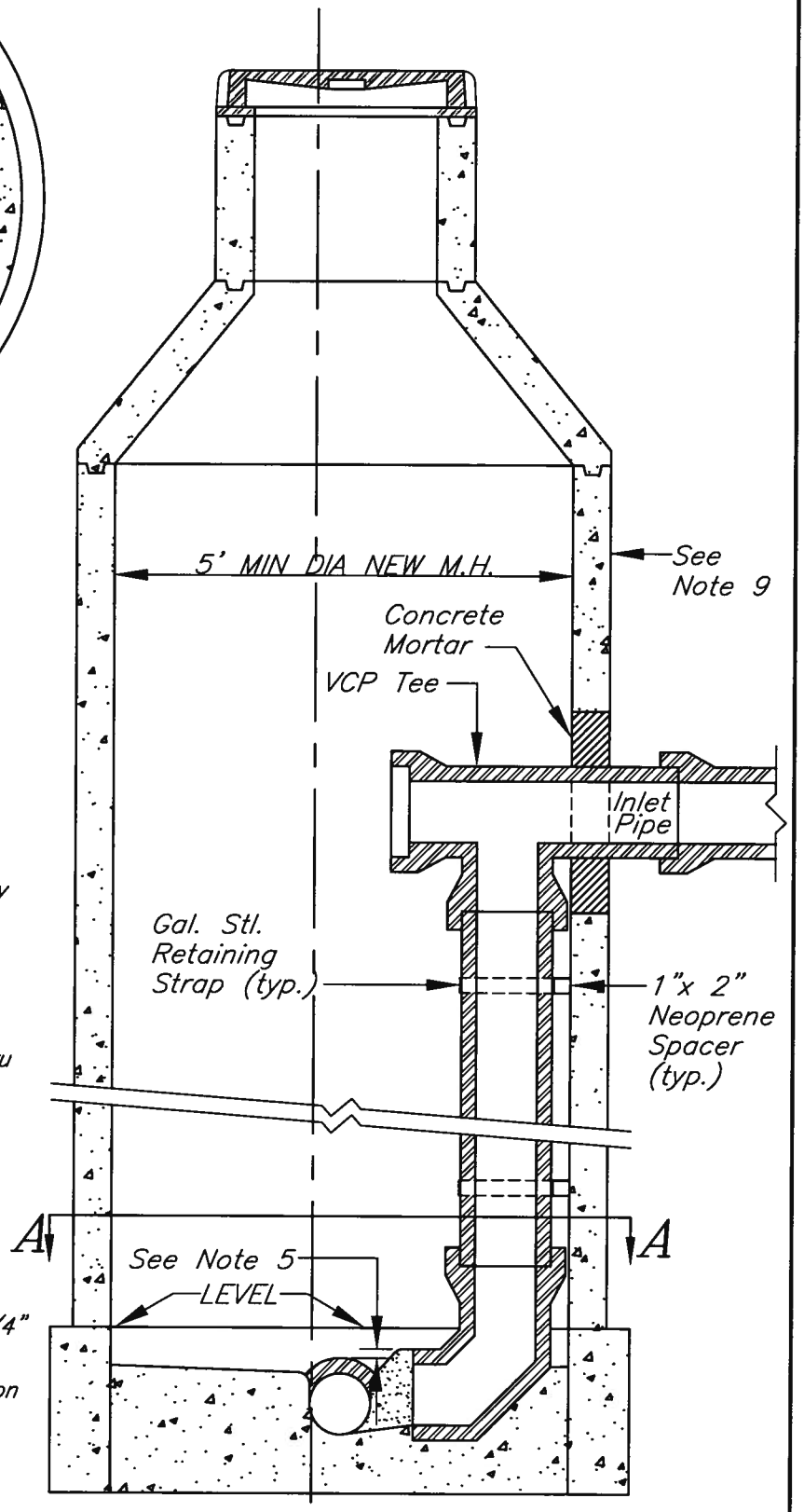

NOTES:

1. Class 560–C–3250 Concrete to be used.
2. Pipe and fittings to be 8" min. inside diameter.
3. If no stubs exist, the manhole is to be broken through and stubs are to be set to grade in concrete.
4. Form a concrete mortar arch around every pipe opening into manhole.
5. Crown of inlet to be 0.10 ft. higher than crown of straight–thru sewer unless otherwise noted. Concrete formed invert to be shaped thru existing shelf in a smooth curve to meet existing straight–thru invert.
6. 3.0 ft desirable minimum drop. 1.82 ft absolute minimum.
7. Install neoprene spacers at retaining straps, bells, and between concrete mortar and inlet pipe.
8. Install two (2) 1" x 3/8" Galv. Stl. retaining straps per joint of pipe. Anchor straps to MH shaft with 1–1/2"x1/4" Galv. Stl. lag screws and lead anchors.
9. See Std. Dwg. 500 for manhole construction details.

APPROVED BY

CITY ENGINEER — DATE 5/18/11

MARK	REVISIONS	APPR.	DATE

CITY OF RIVERSIDE

PUBLIC WORKS DEPARTMENT

DROP MANHOLE

STANDARD DRAWING NO. 503

Sheet 1 of 1

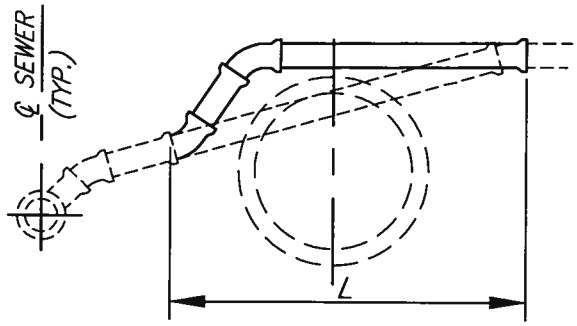

CASE – A

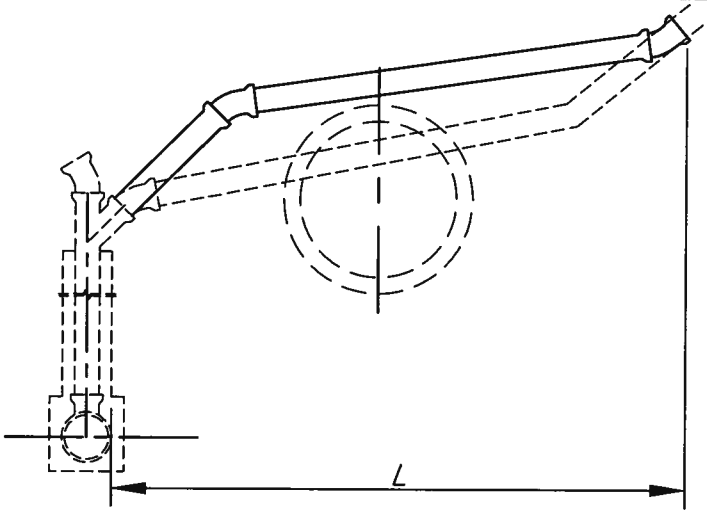

CASE – B

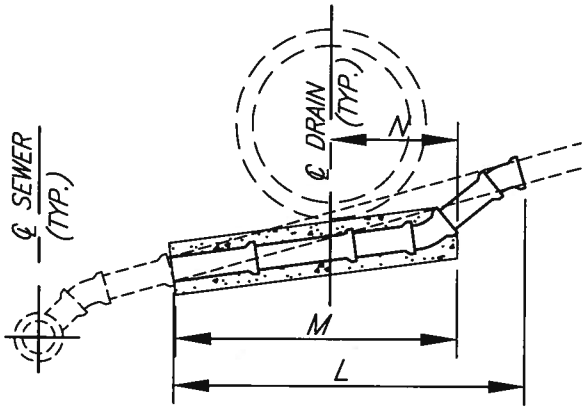

CASE – C

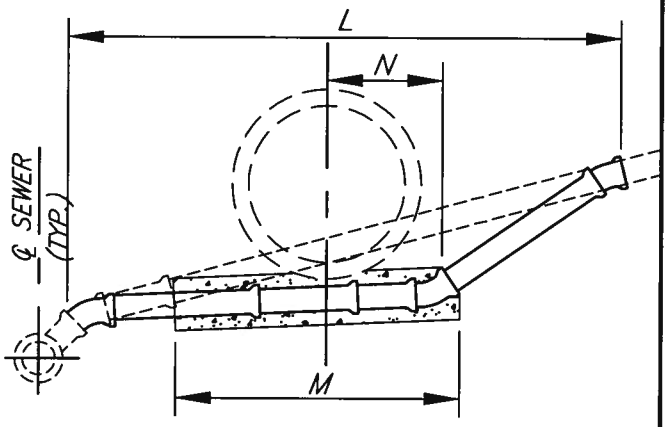

CASE – D

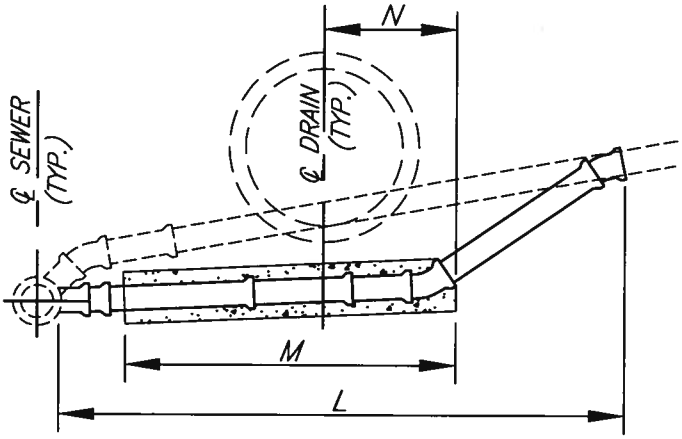

CASE – E

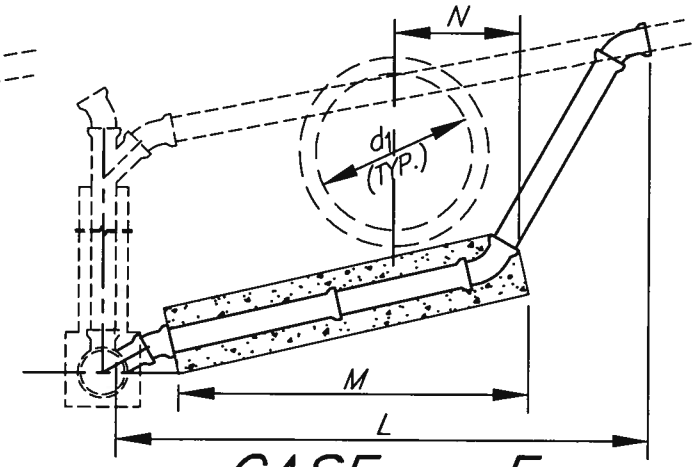

CASE – F

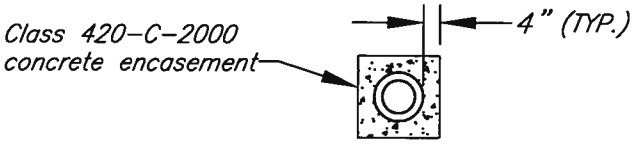

CROSS SECTION OF CONCRETE REINFORCEMENT FOR PIPE.

SEE SHEET 2 FOR NOTES AND DESCRIPTION OF CASES.

APPROVED BY

PUBLIC WORKS DIRECTOR — **DATE** 5/18/11

MARK	REVISIONS	APPR.	DATE

CITY OF RIVERSIDE

PUBLIC WORKS DEPARTMENT

REMODELING DETAILS FOR SEWER LATERALS

STANDARD DRAWING NO. 554

Sheet 1 of 2

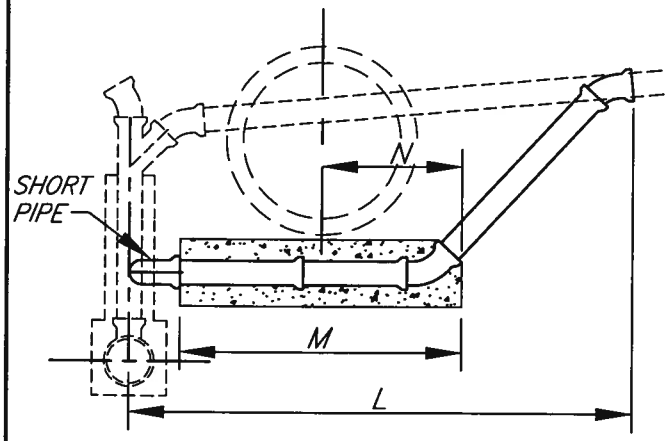

CASE – G

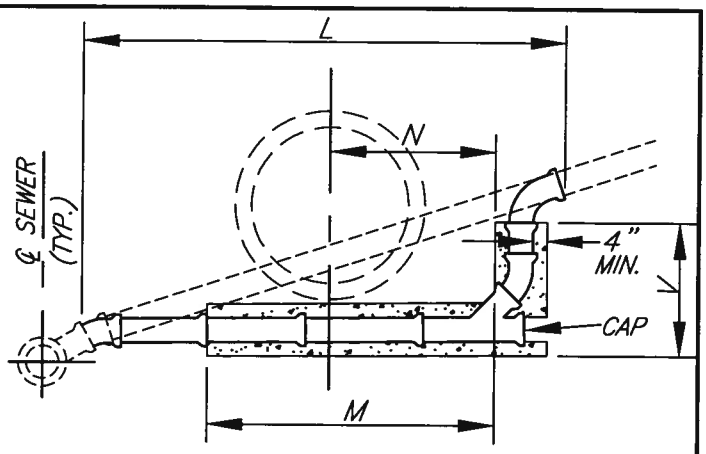

CASE – H

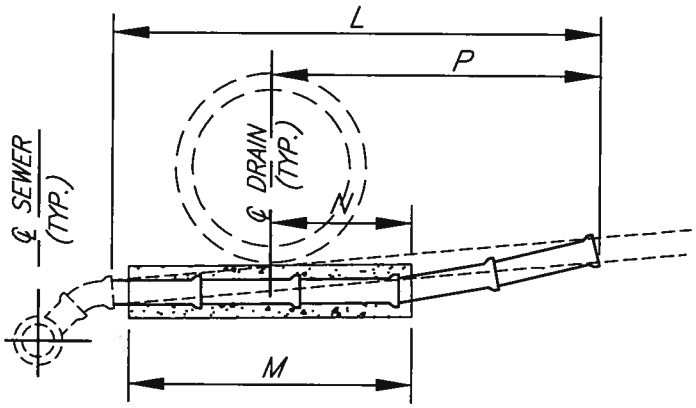

CASE – K

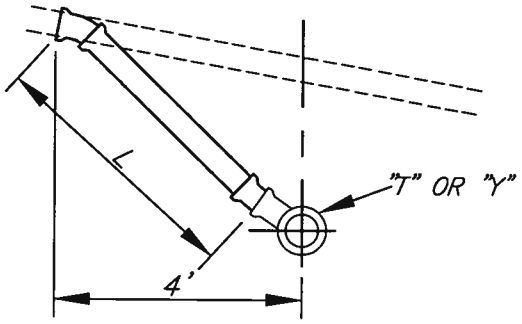

CASE – R

CASES:

A. Above Drain to House Connection–Specials required: 2–1/8 Bends.
B. Above Drain to Chimney – 2–1/8 Bends.
C. Below Drain to House Connection – 2–1/8 Bends.
D. Below Drain To "Y" – 3–1/8 Bends.
E. Below Drain to Flat Saddle – 3–1/8 Bends, 1 Saddle.
F. Below Drain To Saddle – 3–1/8 Bends, 1 Saddle.
G. Below Drain to chimney – 2–1/8 Bends.
H. Below Drain to "Y" – 3–1/8 Bends, 1 "Y".
K. Below Drain to House Connection, Slope slightly modified.
R. Connection with New Sewer – 2–1/8 Bends with "Y".
– 1–4"1/8 Bend with "T".

NOTES:

1. These details do not apply to conflicts between sewer laterals and water lines.
2. Existing pipes are indicated by broken lines.
3. Pipes to be constructed are indicated by solid lines.
4. All pipe diameters shall match existing lateral.
5. All bends shall be 1/8 bends unless specified otherwise.
6. Concrete reinforcement, cross section shown on sheet 1, shall be used on all pipes to be constructed under storm drain, top portion within 1" of storm drain to be omitted.
7. Dimensions:
   - L is specified on plans as the average total length.
   - M=(d_1+24") less enough to avoid a fraction of a foot.
   - N 1/2M, except where specified otherwise on plan.
   - P_1 (case K) is specified where L does not extend to the bend.
   - V_1 (case H) is specified to the nearest foot and in summary, is itemized as concrete reinforcement for 6" pipe.
8. New connection to main line shall conform to standard drawing no. 562.
9. Joints shall be type G per the latest approved edition of Standard Specifications for Public Works Construction.
10. Material used for replacement segment shall be the same as the material used for the existing lateral.

APPROVED BY
CITY ENGINEER — DATE 5/18/11

MARK	REVISIONS	APPR.	DATE

CITY OF RIVERSIDE

PUBLIC WORKS DEPARTMENT

REMODELING DETAILS FOR SEWER LATERALS

STANDARD DRAWING NO. 554

Sheet 2 of 2

1. Flanged cast iron 45° elbow. Class 150.
2. Flanged cast iron 45° WYE. Class 150.
3. Cast iron reducing flange. Class 150. W/2" Threaded plug.
4. Threaded Class 150 Flange.
5. Pipe support. See Detail Sheet 2.
6. Flanged plug valve. Class 150.
7. Ductile iron pipe to match diameter of Force Main.
8. Dresser Style 253 Coupling.

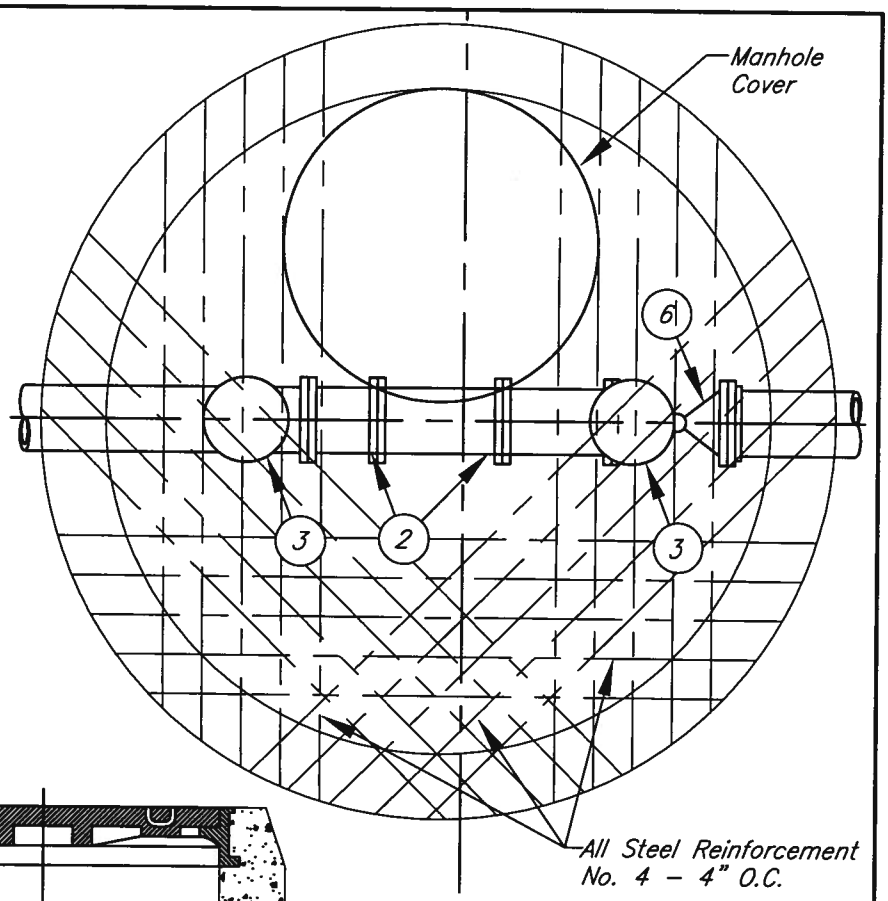

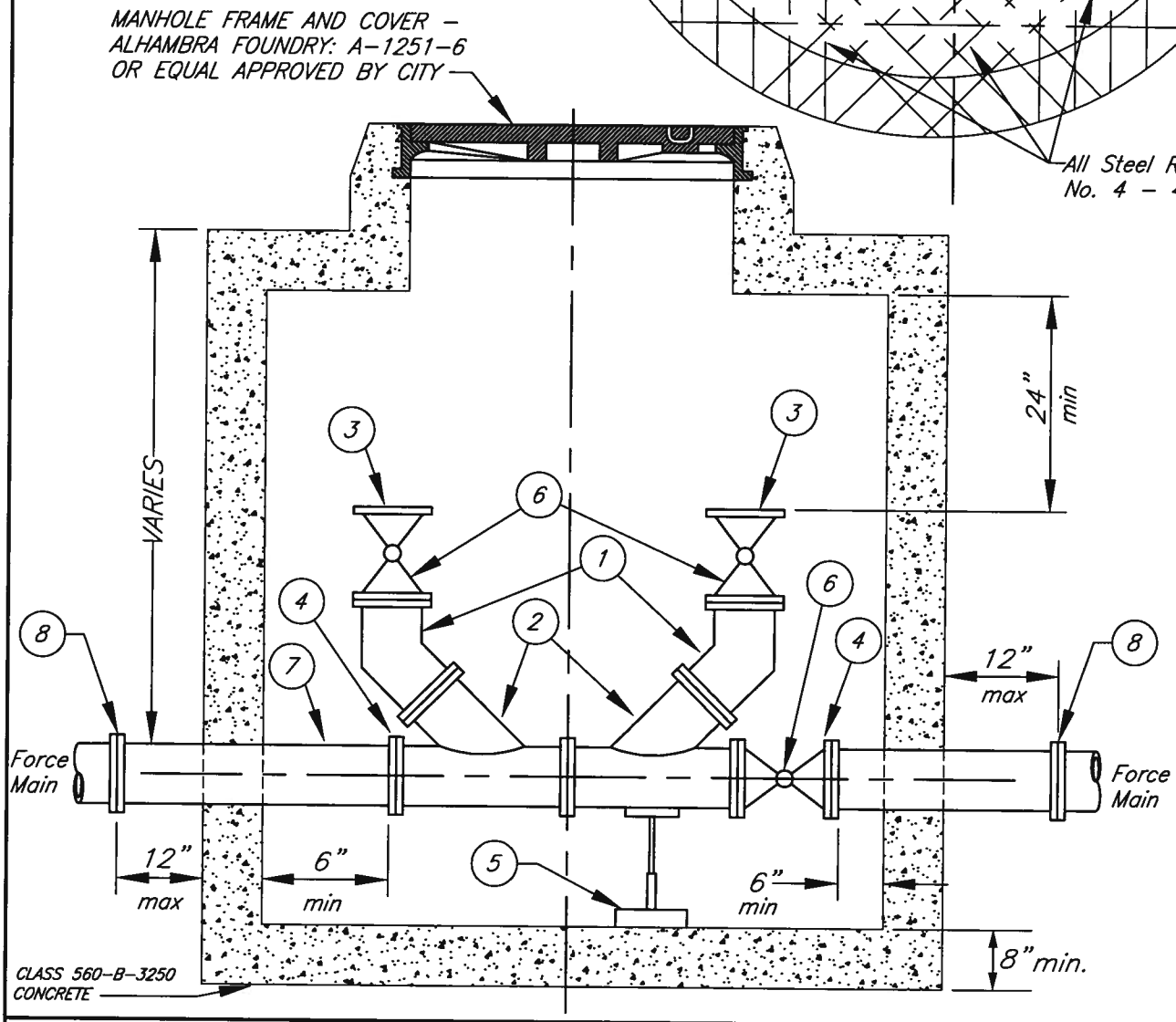

APPROVED BY

CITY ENGINEER — DATE 5/18/11

MARK	REVISIONS	APPR.	DATE

CITY OF RIVERSIDE

PUBLIC WORKS DEPARTMENT

PRECAST CONCRETE FORCE MAIN CLEANOUT

STANDARD DRAWING NO. 559

Sheet 1 of 2

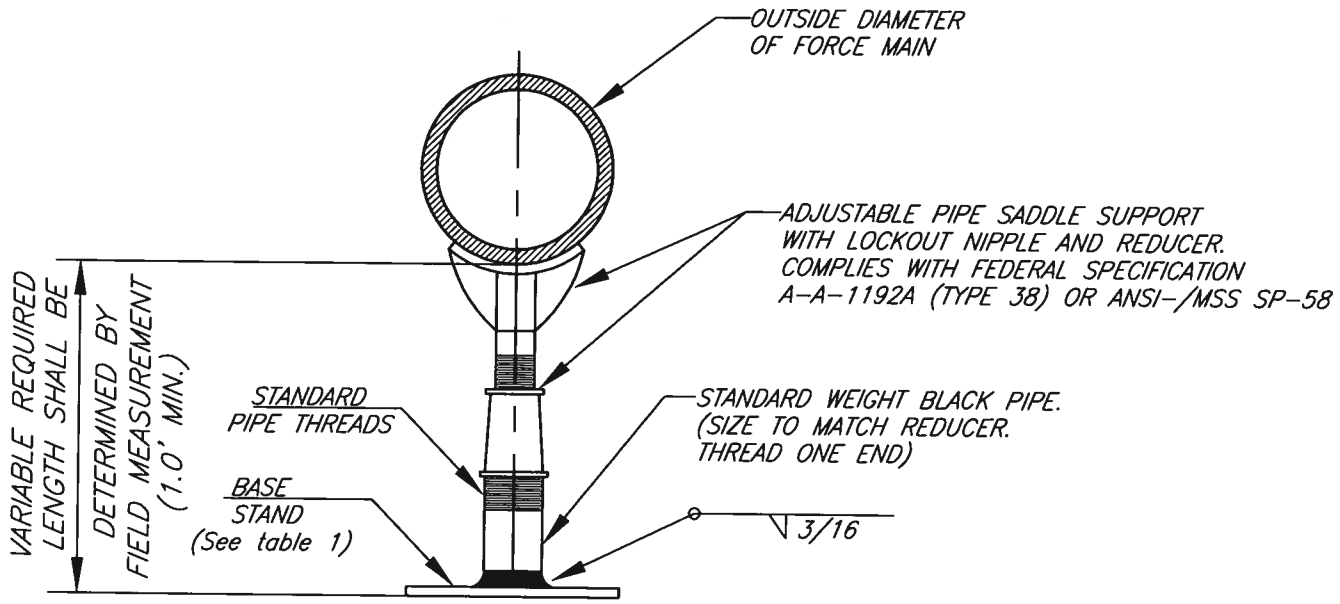

PIPE SUPPORT DETAIL

NTS

GENERAL NOTES:

1. All fittings shall be same size as the force main.

2. Steps shall be 14" wide stirrup type safety steps. The steps or sockets shall be cast in place at time of manufacture. Steps shall be spaced a a maximum of 16" c.c. Material for steps shall be 1/2" grade 60 steel reinforcing rod coated with polypropylene, ASTM D-4101 or City approved equal.

3 Diameter of force main cleanout shall be determined by force main size as in the following table.

Force Main	Manhole Size
4"	72"
6"	72"
8"	78"
10"	84"

4. When force main cleanout is in a street to be paved manhole frame shall be set after adjacent pavement has been placed. Top shall be flush with pavement.

5. At the contractor's option, thickness of manhole wall may be 4-1/8" provided class 560-D-4000 concrete. is used.

6. Cover shall have letter S in center.

TABLE 1

Force Main	Steel Plate Size
4"	1/2" x 12" x 12"
6"	1/2" x 18" x 18"
8"	5/8" x 18" x 18"
10"	3/4" x 24" x 24"

APPROVED BY
CITY ENGINEER
5/18/11
DATE

MARK	REVISIONS	APPR.	DATE

CITY OF RIVERSIDE
PUBLIC WORKS DEPARTMENT

PRECAST CONCRETE FORCE MAIN CLEANOUT

STANDARD DRAWING NO. 559

Sheet 2 of 2

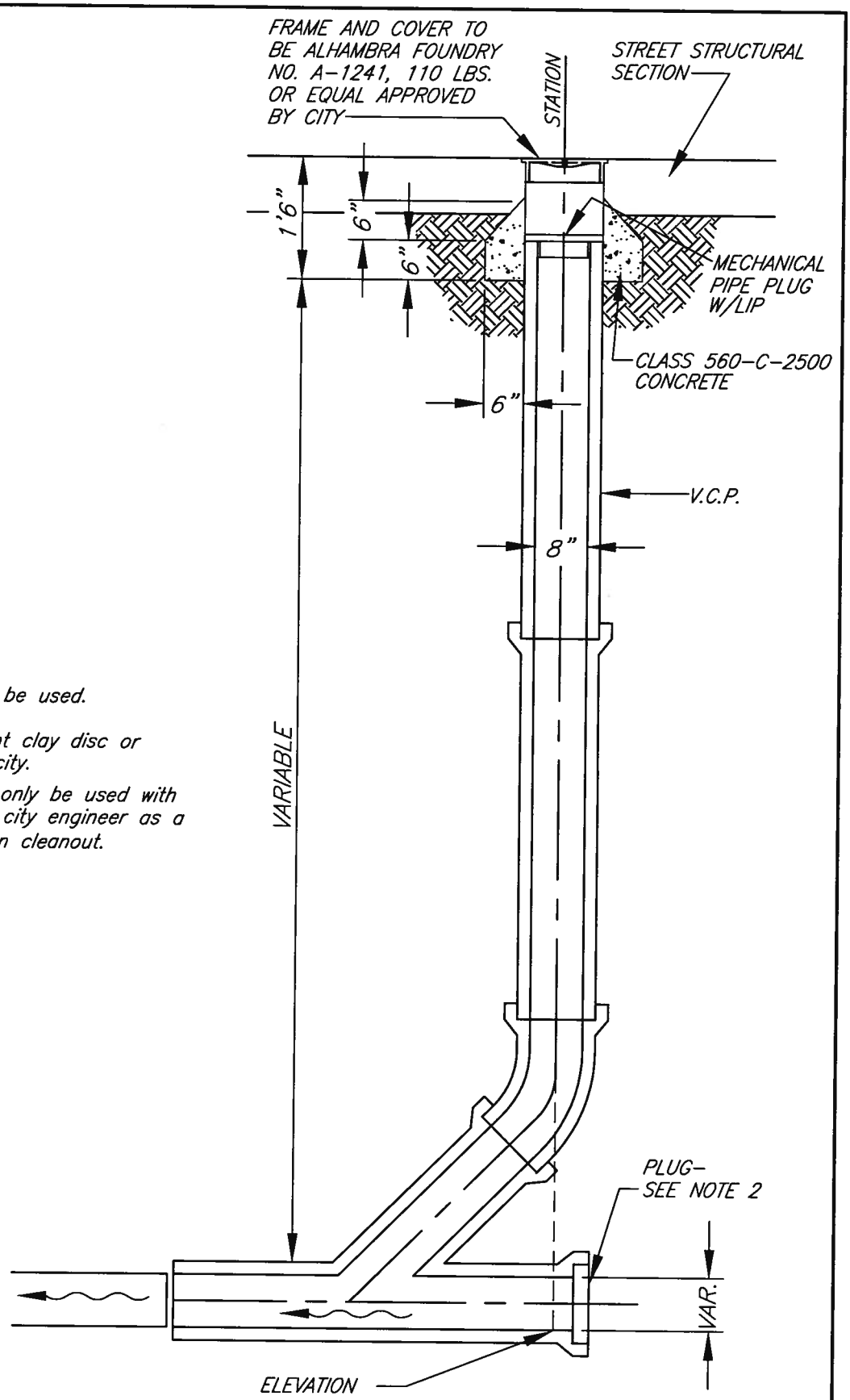

NOTES:

1. Type G joints shall be used.
2. Plug stub with burnt clay disc or equal approved by city.
3. This standard shall only be used with the approval of the city engineer as a temporary termination cleanout.

APPROVED BY

CITY ENGINEER

5/18/11

DATE

MARK	REVISIONS	APPR.	DATE

CITY OF RIVERSIDE

PUBLIC WORKS DEPARTMENT

SEWER CLEANOUT

STANDARD DRAWING NO. 560

Sheet 1 of 1

NOTES:

1. The upper end of the chimney pipe shall be 5' below the grade of the lower curb, unless otherwise specified.
2. Where one or two house connections are to be joined to the chimney pipe use a double "T" branch. Where three house connections are to be joined use a double "T" branch and one single tee.
3. Face "T" toward property to be served.
4. When there is material difference in elevation of property on either side of the main line sewer, disregard note 3 and face "T" branch toward the lower side of the street.
5. 16" irrigation type pipe or circular encasement with a minimum diameter of 16" may be used in lieu of concrete encasement shown here. pipe incasement shall be filled with concrete.
6. Pour base against firm undisturbed soil.
7. Top of chimney and "T's" not used shall be plugged with manufactured plug.
8. Class 560-C-3250 concrete to be used.
9. In lieu of encased V.C.P. contractor may install cast iron pipe with encasement only around the main line tee.

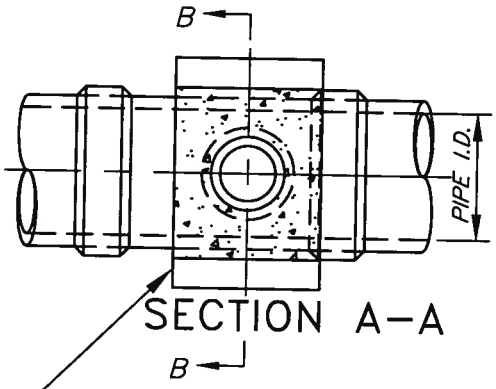

SECTION A-A

PIPE ENCASEMENT ALTERNATE

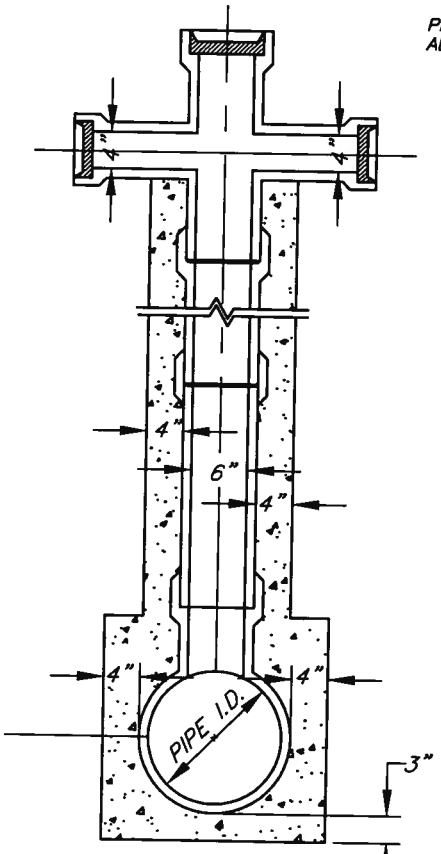

SECTION B-B

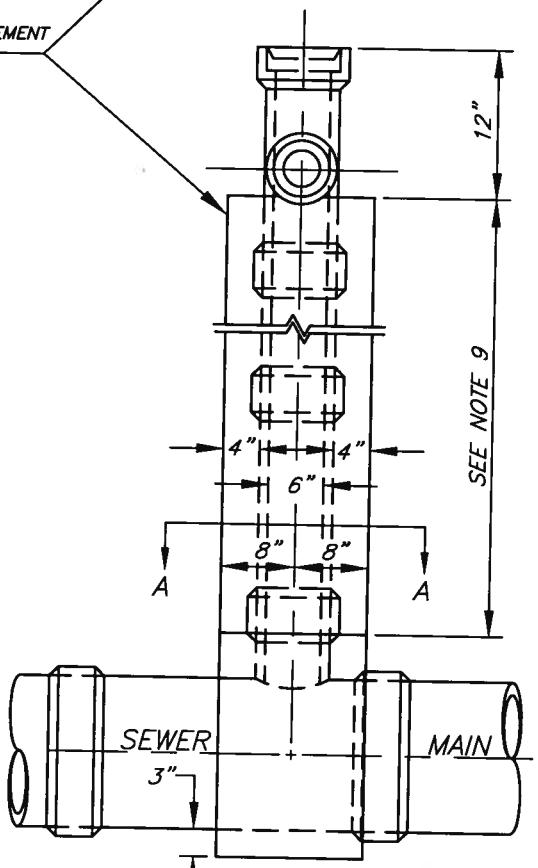

ELEVATION

APPROVED BY

CITY ENGINEER

DATE 5/18/11

MARK	REVISIONS	APPR.	DATE

CITY OF RIVERSIDE

PUBLIC WORKS DEPARTMENT

STANDARD CHIMNEY PIPE

STANDARD DRAWING NO. 561

Sheet 1 of 1

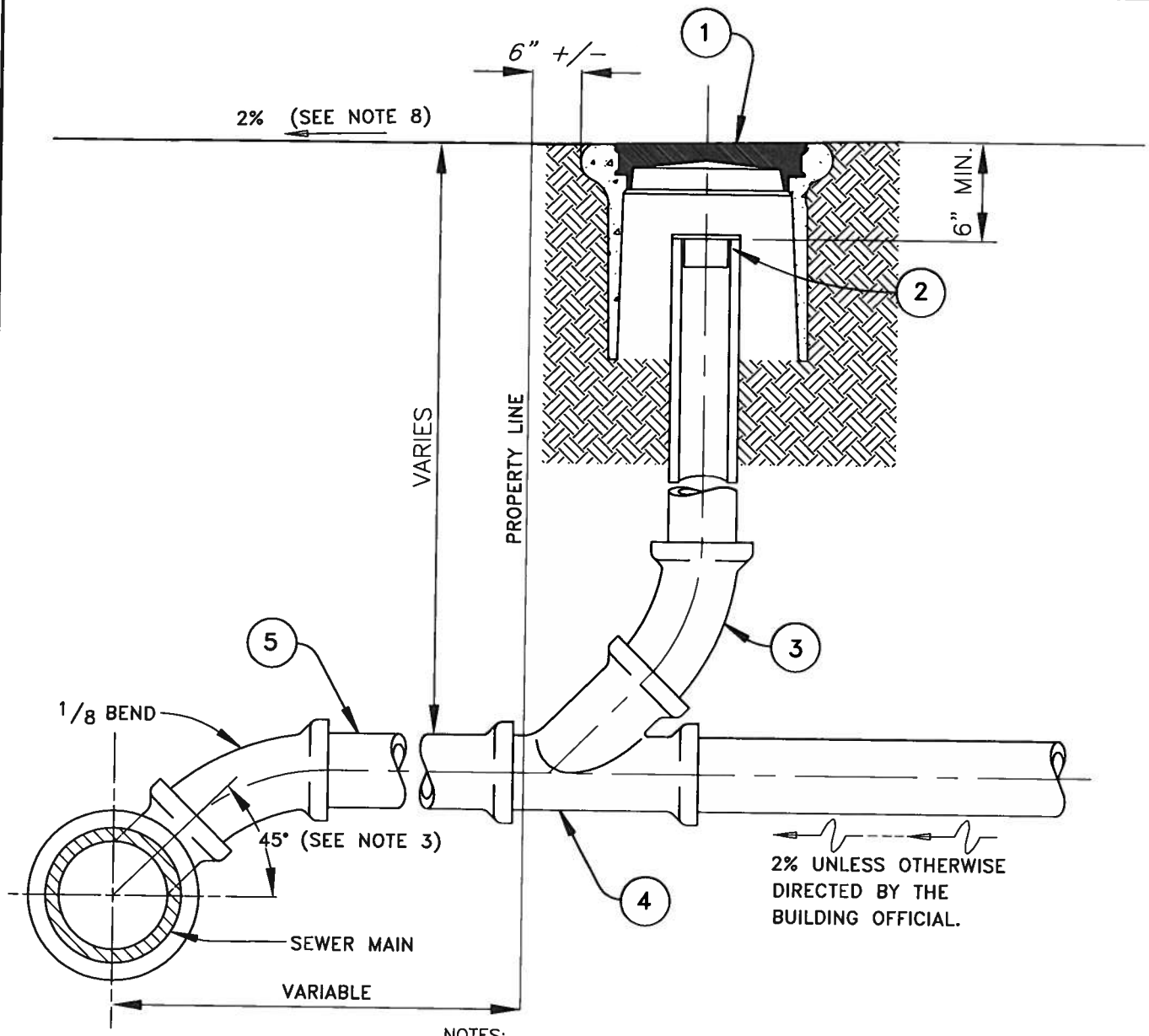

MATERIALS

① BROOKS #1-RT VALVE BOX OR EQUAL. (MARKED SEWER)

② MECHANICAL PIPE PLUG W/LIP.

③ MINIMUM 4" SEWER PIPE.

④ WYE PER UNIFORM BUILDING CODE.

⑤ MATERIAL USED FOR LATERAL BETWEEN THE SEWER MAIN AND PROPERTY LINE SHALL BE THE SAME AS SEWER MAIN.

NOTES:

1. PLACE CLEANOUT INSIDE PRIVATE PROPERTY.
2. LID MUST BE CAST IRON FOR LOCATING PURPOSES AND MARKED SEWER.
3. TEES OR WYES LESS THAN 6' DEEP SHALL BE LAID FLAT.
4. MINIMUM DEPTH OF LATERAL AT CURB LINE AND PROPERTY LINE TO BE DETERMINED IN THE FIELD.
5. BACKFILL OVER LATERALS TO BE COMPACTED BY TAMPING ONLY.
6. FOR CONNECTIONS TO MAINS LESS THAN 12" MAKE CONNECTIONS WITH WYE OR TEE.
7. FOR CONNECTIONS TO MAINS 12" OR LARGER MAKE CONNECTIONS WITH CORED HOLE AND SADDLE TEE.
8. GRADE PARKWAY AT 2% TOWARDS CURB OR BACK OF SIDEWALK OR AS DIRECTED BY THE ENGINEER.
9. WHERE LATERAL IS CONSTRUCTED UNDER AN EXISTING CURB, THE CONTRACTOR SHALL CHISEL THE LETTER "L" INTO THE CURB FACE DIRECTLY ABOVE THE LATERAL. "L" TO BE 1-1/2" HIGH & 3/16" DEEP.

APPROVED BY

CITY ENGINEER — DATE 5/18/14

MARK	REVISIONS	APPR.	DATE

CITY OF RIVERSIDE

PUBLIC WORKS DEPARTMENT

SEWER LATERAL with PL C.O.

STANDARD DRAWING NO. 562

Sheet 1 of 1

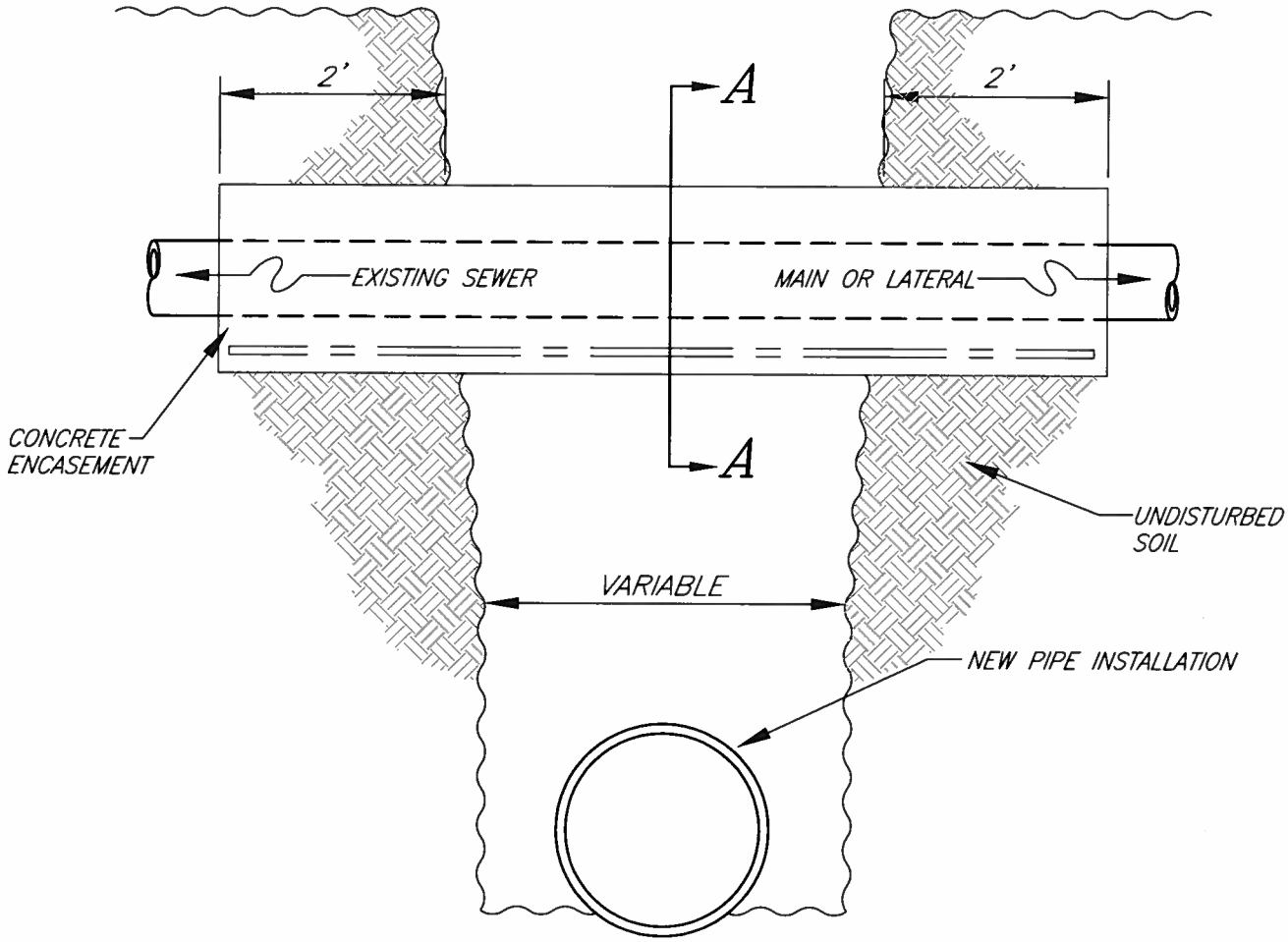

NOTES:

1. Encasement shall be required for trench width 2' or greater.
2. A sewer lateral may be replaced with cast iron pipe in lieu of encasement. The cast iron pipe shall have the same diameter as the existing lateral and the length shall be the same as would have been required for encasement. Cast iron pipe shall not be used on sewer mains.
3. Reinforcing steel my be omitted if trench width is less than 3'.
4. For sewer pipe crossings of less than 3' over a water main see P.U.D. Water division Std. Dwg. No. CWD-015-1.

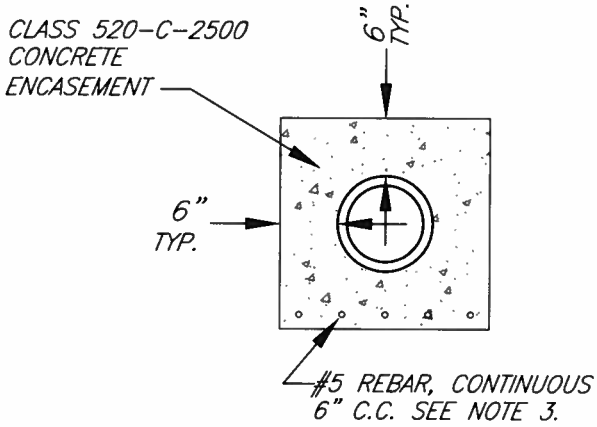

SECTION A-A

APPROVED BY

CITY ENGINEER — DATE 5/18/11

MARK	REVISIONS	APPR.	DATE

CITY OF RIVERSIDE

PUBLIC WORKS DEPARTMENT

SEWER PIPE ENCASEMENT ACROSS TRENCHES

STANDARD DRAWING NO. 564

Sheet 1 of 1

PROPOSED	EXISTING	
		PEDESTRIAN SIGNAL INDICATION
		PEDESTRIAN PUSH BUTTON POST
		EMERGENCY VEHICLE PRE-EMPTION (EVP)
		VEHICLE SIGNAL INDICATION (WITH BACKPLATE, 3-SECTION: RED, YELLOW AND GREEN)
		VEHICLE SIGNAL INDICATION WITH ANGLE VISORS, R OR L CUTOFF
PV	PV	MODIFICATIONS OF BASIC SYMBOLS: "L" - ALL NON-ARROW SECTIONS LOUVERED "LG" - LOUVERED GREEN SECTION ONLY "PV" - PROGRAMMABLE VISIBILITY SECTIONS
		TYPE 15TS WITH VEHICLE SIGNAL INDICATION
		VEHICLE SIGNAL INDICATION WITH RED, YELLOW AND GREEN LEFT ARROW SECTIONS
		VEHICLE SIGNAL INDICATION WITH RED, YELLOW AND GREEN UP ARROWS
		TYPE 1 STANDARD WITH VEHICLE SIGNAL INDICATION AND PEDESTRIAN HEAD
		STANDARD WITH SIGNAL MAST ARM, VEHICLE SIGNAL INDICATIONS, LUMINAIRE, PEDESTRIAN SIGNAL INDICATION AND INTERNALLY ILLUMINATED STREET NAME SIGN (IISNS)
		ELECTRIC SERVICE (120/240V)
		TYPE 15-FBS STANDARD WITH TWO VEHICLE SIGNAL INDICATIONS WITH LENSES, BACKPLATE AND VISOR WITH TRAFFIC SIGN
R	Y	FLASHING BEACON. ONE VEHICLE SIGNAL INDICATION WITH LENS, BACKPLATE AND VISOR. "R" INDICATES RED INDICATION, "Y" INDICATES YELLOW INDICATION
		CONTROLLER ASSEMBLY
		TYPE "E" LOOP DETECTOR (6' DIAMETER)
		TYPE "D" MODIFIED LOOP DETECTOR (6' OR APPROPRIATE DIAMTER FOR BICYCLE LANES)

APPROVED BY

CITY ENGINEER — DATE 5/18/11

MARK	REVISIONS	APPR.	DATE

CITY OF RIVERSIDE

PUBLIC WORKS DEPARTMENT

TRAFFIC SIGNAL & LIGHTING STANDARD SYMBOLS

STANDARD DRAWING NO. 600

Sheet 1 of 1

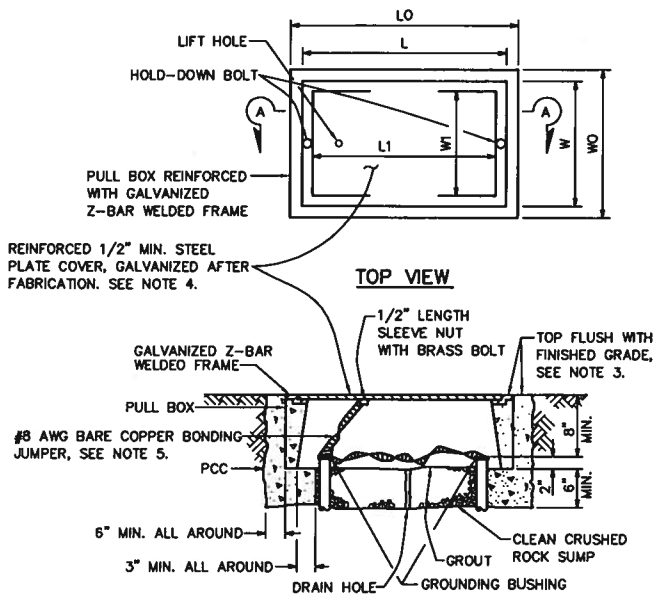

SECTION A–A

NO. 5(T) AND NO. 6(T) TRAFFIC PULL BOX

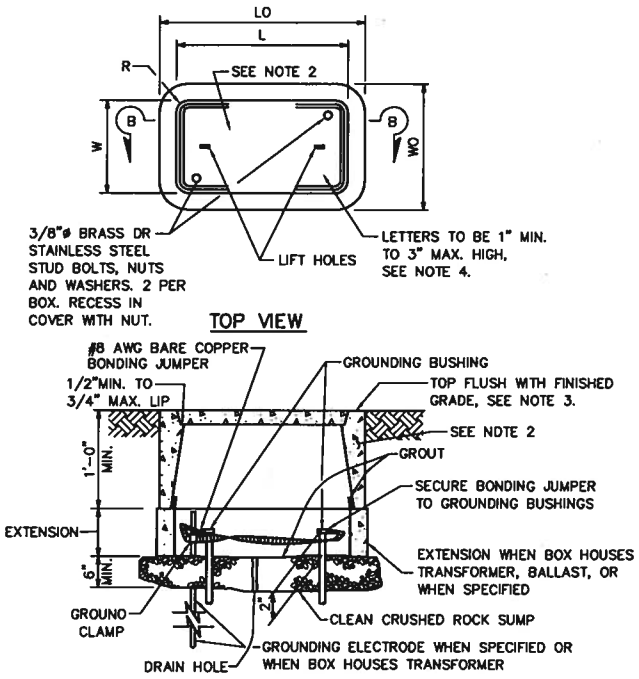

SECTION B–B

INSTALLATION DETAILS

NOTES ON PULL BOXES:

1. #6 PULL BOXES SHALL HAVE A "FIBERLYTE" COVER AND #5 PULL BOXES SHALL HAVE A CONCRETE COVER. COVERS SHALL HAVE A NON-SKID SURFACE.
2. STEEL REINFORCING SHALL BE AS REGULARLY USED IN THE STANDARD PRODUCTS OF THE RESPECTIVE MANUFACTURER.
3. TOP OF PULL BOXES SHALL BE FLUSH WITH SURROUNDING GRADE OR TOP OF ADJACENT CURB, EXCEPT THAT IN UNPAVED AREAS WHERE PULL BOX IS NOT IMMEDIATELY ADJACENT TO AND PROTECTED BY A CONCRETE FOUNDATION, POLE OR OTHER PROTECTIVE CONSTRUCTION, THE BOX SHALL BE PLACED WITH IT'S TOP 1-1/4" ABOVE SURROUNDING GRADE. WHERE PRACTICABLE, PULL BOXES SHOWN IN THE VICINITY OF CURBS SHALL BE PLACED ADJACENT TO THE BACK OF CURB, AND PULL BOXES SHOWN ADJACENT TO STANDARDS SHALL BE PLACED ON SIDE OF FOUNDATION FACING AWAY FROM TRAFFIC, UNLESS OTHERWISE NOTED. WHEN PULL BOX IS INSTALLED IN SIDEWALK AREA, THE DEPTH OF THE PULL BOX SHALL BE ADJUSTED SO THAT THE TOP OF THE PULL BOX IS FLUSH WITH THE SIDEWALK. ALL UNIMPROVED AREAS SHALL HAVE A 6" WIDE X 4" DEEP CONCRETE BORDER AROUND THE PULL BOX.
4. PULL BOX LIDS SHALL BE MARKED "TRAFFIC SIGNAL" FOR TRAFFIC SIGNAL EQUIPMENT.
   A) NUMBER 5, 6, 6E, 9 OR 9A PULL BOXES.
      1) "TRAFFIC SIGNAL" TRAFFIC SIGNAL CIRCUITS WITH OR WITHOUT STREET OR SIGN LIGHTING CIRCUITS
5. BONDING JUMPER FOR METAL COVERS SHALL BE 3' LONG MINIMUM.
6. THE NOMINAL DIMENSIONS OF THE OPENING IN WHICH THE COVER SETS SHALL BE THE SAME AS THE COVER DIMENSIONS EXCEPT THE LENGTH AND WIDTH DIMENSIONS SHALL BE 1/8" GREATER.
7. COVERS AND BOXES SHALL BE INTERCHANGEABLE WITH CALIFORNIA STANDARD MALE AND FEMALE GAGES. WHEN INTERCHANGED WITH A STANDARD MALE AND FEMALE GAGE, THE TOP SURFACES SHALL BE FLUSH WITHIN 1/8". TOP OUTSIDE EDGE OF CONCRETE COVERS AND PULL BOXES SHALL HAVE A 1/4" MINIMUM RADIUS.
8. PULL BOXES SHALL NOT BE INSTALLED WITHIN THE BOUNDARIES OF NEW OR EXISTING CURB RAMPS.
9. PULL BOXES FOR ELECTROLIERS, POST AND SIGNAL STANDARDS SHALL BE LOCATED +/- 5' FROM THE STATION OF THE ADJACENT ELECTROLIER, POST OR SIGNAL STANDARD. PULL BOXES SHALL BE PLACED ADJACENT TO BACK OF CURB OR EDGE OF SHOULDER EXCEPT WHERE THIS IS IMPRACTICAL, A BOX MAY BE PLACED IN ANOTHER SUITABLE PROTECTED AND ACCESSIBLE LOCATION.
10. PULL BOXES SHALL BE NO. 6 UNLESS OTHERWISE SPECIFIED ON PLAN.
11. PULL BOXES SUBJECT TO TRAFFIC LOADS SHALL BE CALTRANS SPEC. TYPE (T).

DIMENSION TABLE

PULL BOX	CONCRETE BOX				CONCRETE OR NON-PCC COVERS				
	MIN. * THICKNESS	MIN. DEPTH BOX AND EXTENSION	WO	LO	L **	W **	R	EDGE THICKNESS	EDGE TAPER
NO. 5	1"	1'-10"	1'-4¾"	2'-2¼"	1'-11¼"	1'-1¾"	1¼"	2"	⅛"
NO. 6	1½"	2'-0"	1'-8⅝"	2'-9⅝"	2'-6½"	1'-5½"	1¼"	2"	⅛"

* EXCLUDING CONDUIT WEB ** TOP DIMENSION

DIMENSION TABLE

PULL BOX	CONCRETE BOX						CONCRETE OR NON-PCC COVERS				
	MIN. * THICKNESS	MIN DEPTH BOX AND EXTENSION	WO	LO	L1	W1	L **	W **	R	EDGE THICKNESS	EDGE TAPER
No. 5(T)	1¾"	1'-0"	1'-11½"+/-	2'-5½"+/-	1'-7"+/-	1'-1"+/- 1"	2'-3"+/-	1'-4"+/-	0"	½"	NONE
No. 6(T)	2"	1'-0"	2'-6"+/- 1"	2'-11½"+/-	1'-11½"+/-	1'-5"+/- 1"	2'-9"+/-	1'-8"+/-	0"	½"	NONE

* EXCLUDING CONDUIT WEB ** TOP DIMENSION

APPROVED BY

CITY ENGINEER — DATE 5/18/11

MARK	REVISIONS	APPR.	DATE

CITY OF RIVERSIDE

PUBLIC WORKS DEPARTMENT

TRAFFIC SIGNAL PULL BOX

STANDARD DRAWING NO. 606

Sheet 1 of 1

NOTES:

1. ALL JOINTS IN CONDUIT, PULL BOXES, ETC. SHALL BE THREADED WEATHERPROOF CONNECTIONS.
2. FOR ALL SERVICE POLES: THE CONTRACTOR SHALL STUB 1½" CONDUIT UP POLE 8'–2" FROM FINISHED GRADE TO BOTTOM OF BREAKER CAN.
3. EXACT QUADRANT LOCATION OF THE 1½" CONDUIT STUB SHALL BE SHOWN ON PLAN.
4. COMBINED SERVICE FOR SIGNALS AND LIGHTING SHALL BE AS INDICATED FOR SINGLE SERVICE AS DESCRIBED IN NOTE 2 ABOVE, EXCEPT CONTRACTOR SHALL INSTALL (4) #8, (1) BLACK AND (1) WHITE FOR 120V MULTIPLE LIGHTING, (2) BLACK FOR 240V MULTIPLE LIGHTING, (1) RED AND (1) WHITE FOR 120V SIGNAL SERVICE. THE WEATHERPROOF BREAKER CAN SHALL BE SQUARE–D PART #Q0612L100RB TO HOLD (1) S.P. 50A 120V BREAKER FOR SIGNAL SERVICE, (1) D.P. 30A 240V BREAKER FOR SAFETY LIGHTING AND (1) S.P. 15A 240V BREAKER FOR IISNS, UNLESS OTHERWISE NOTED.
5. PULL BOXES FOR UNDERGROUND SERVICE SHALL BE INSTALLED AS PER STANDARD DRAWING NO. 606 NEAR POLE BASE IF INDICATED ON PLAN.
6. FOR ADDITIONAL SERVICE DETAILS AND NOTES, SEE STANDARD DRAWING NO. 667.

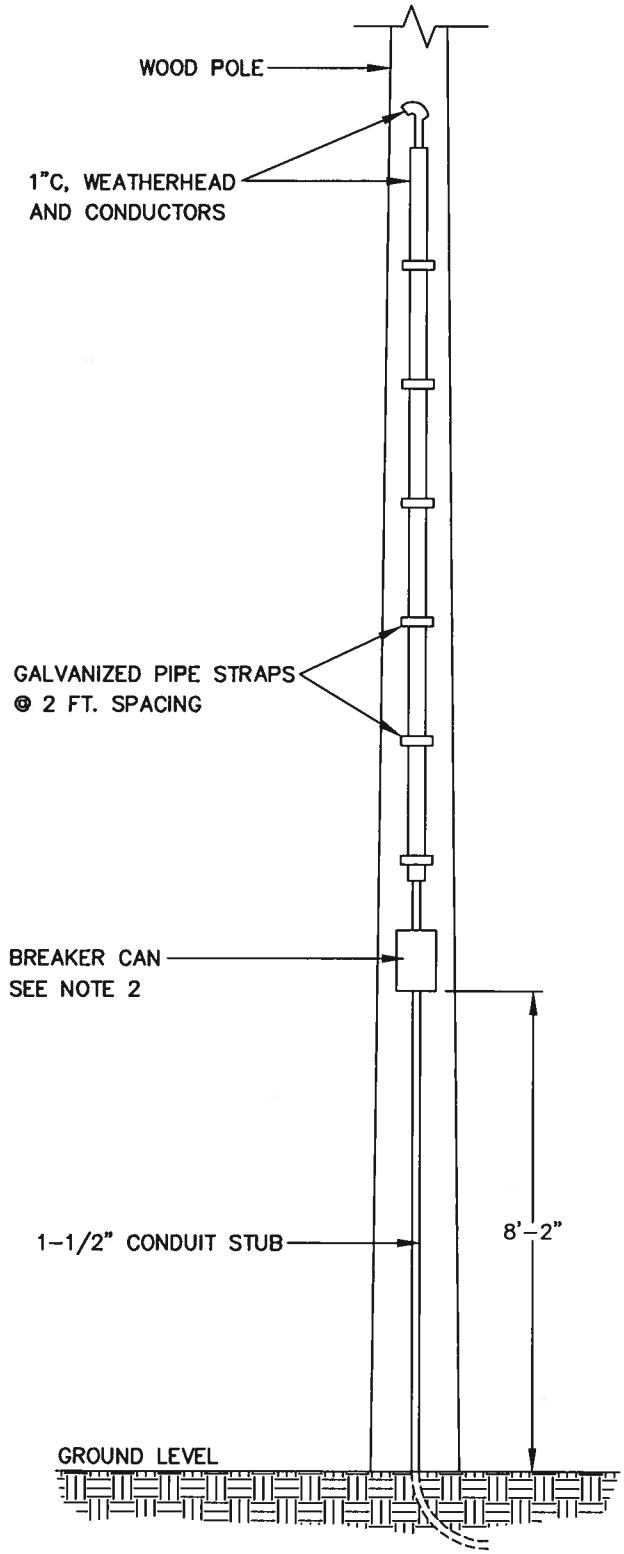

APPROVED BY

CITY ENGINEER — DATE 5/18/11

MARK	REVISIONS	APPR.	DATE

CITY OF RIVERSIDE

PUBLIC WORKS DEPARTMENT

TRAFFIC SIGNAL OVERHEAD ELECTRICAL SERVICE

STANDARD DRAWING NO. 612

Sheet 1 of 1

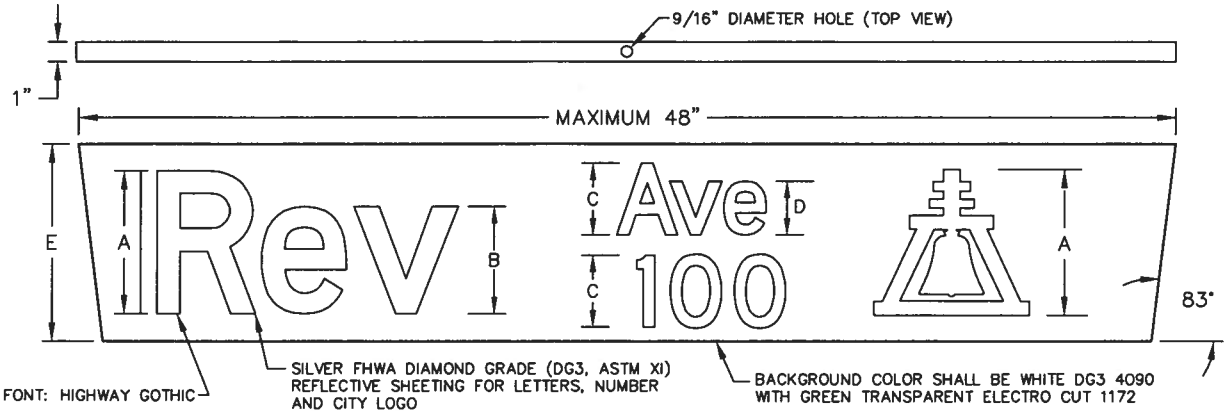

TABLE 1: LETTER & BLADE SIZE

MOUNTING TYPE	SPEED LIMIT	MINIMUM LETTER HEIGHT		SUFFIX		BLADE SIZE (E)
		INITIAL UPPER-CASE (A)	LOWER CASE (B)	INITIAL UPPER-CASE (C)	LOWER CASE (D)	
POST-MOUNTED	40 MPH OR LESS	6 INCHES	4.5 INCHES	3 INCHES	2.25 INCHES	9 INCHES
POST-MOUNTED	MORE THAN 40 MPH	8 INCHES	6 INCHES	4 INCHES	3 INCHES	12 INCHES

TABLE 2: STD SUFFIXES

SUFFIX	ABBREV
AVENUE	Ave
BOULEVARD	Blvd
CIRCLE	Cir
COURT	Ct
DRIVE	Dr
LANE	Ln
PARKWAY	Pkwy
PLACE	Pl
ROAD	Rd
STREET	St
TERRACE	Ter
TRAIL	Tr
WAY	Way

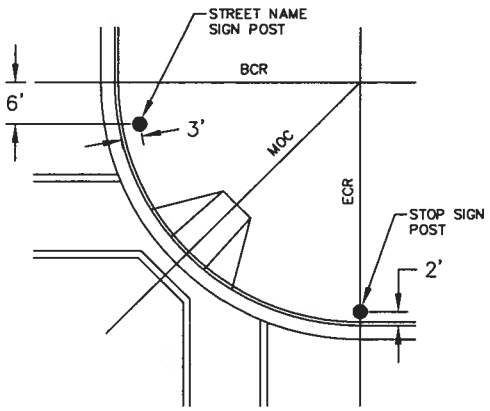

TYPICAL LOCATION OF STREET NAME AND STOP SIGNS

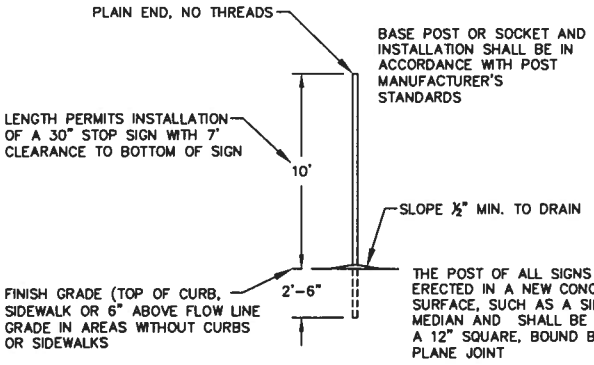

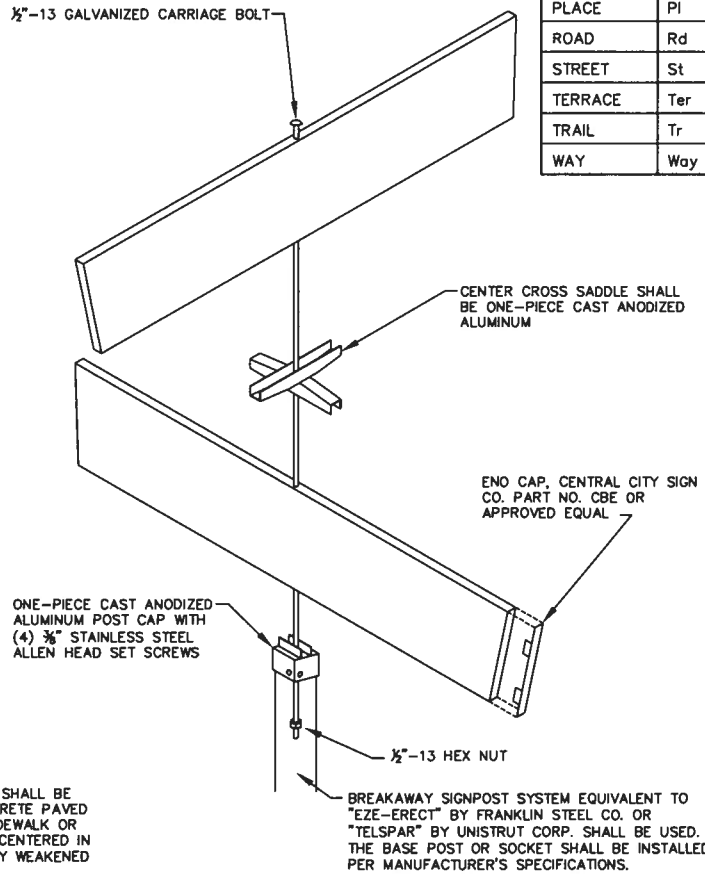

INSTALLATION DETAILS

APPROVED BY

CITY ENGINEER — DATE 5/18/11

MARK	REVISIONS	APPR.	DATE

CITY OF RIVERSIDE

PUBLIC WORKS DEPARTMENT

STREET NAME SIGNS (MAJOR & MINOR STREETS)

STANDARD DRAWING NO. 662

Sheet 1 of 1

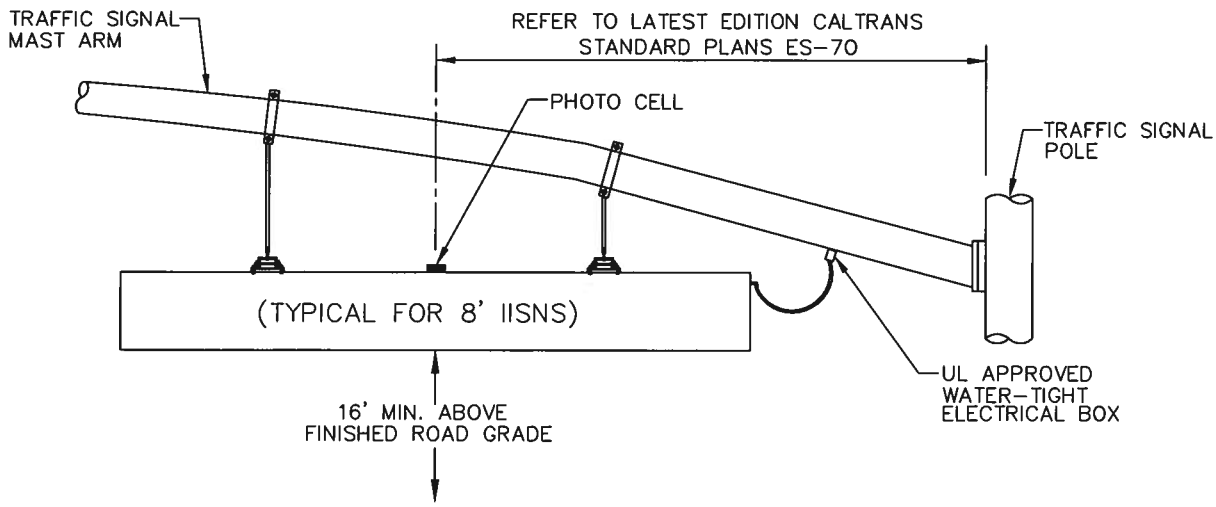

MAST ARM MOUNTING DETAIL

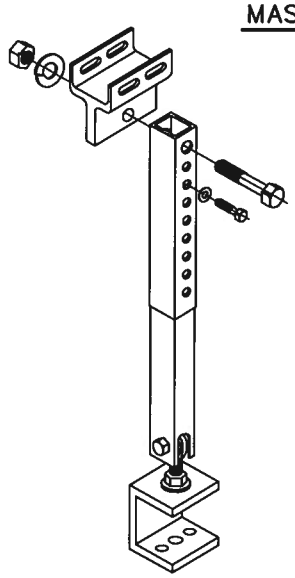

ADJUSTABLE EXTENDED LENGTH BRACKET

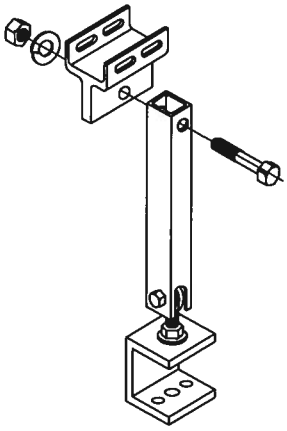

FIXED LENGTH BRACKET

GENERAL NOTES:

1. EACH IISNS ASSEMBLY SHALL INCLUDE INDIVIDUAL PHOTO CELL.
2. IISNS ASSEMBLIES SHALL BE TYPE "A".
3. MESSAGE SHALL BE DISPLAYED ON BOTH SIDES UNLESS OTHERWISE SPECIFIED ON PLAN, SEE SHEET 2 FOR LEGEND LAYOUT.
4. SEE SPECIAL PROVISIONS AND/OR PLANS FOR STREET NAMES, SUFFIXES AND BLOCK NUMBERS.
5. PANEL COLOR: 3M DIAMOND GRADE DG3 REFLECTIVE SHEETING, 4090T TRANSLUCENT WHITE. PANELS SHALL BE SUPPLIED TO THE SIGN SHOP FOR FABRICATION.
6. ALL IISNS SHALL HAVE LED LIGHTING ASSEMBLIES.
7. EACH MAST ARM MOUNTED REFLECTORIZED SNS BLADE SHALL HAVE (1) EACH OF SAFEWAY SIGN COMPANY MOUNTING BRACKETS AS SHOWN WITH ALL NECESSARY HARDWARE OR CITY APPROVED EQUAL. REFER TO SHEET 3 FOR ORDERING INFORMATION.

APPROVED BY

CITY ENGINEER — DATE 5/18/11

MARK	REVISIONS	APPR.	DATE

CITY OF RIVERSIDE

PUBLIC WORKS DEPARTMENT

TRAFFIC SIGNAL STREET NAME SIGNS

STANDARD DRAWING NO. 663

Sheet 1 of 3

TYPICAL LEGEND LAYOUT

FONT: HIGHWAY GOTHIC

PANEL SIZE: APPROX. 16.5" X 70.5"
LETTERS CUT IN REVERSE IN 3M 1175 ELECTROCUT FILM WHICH IS LAID OVER 3M DG3 4090 WHITE WITH $\frac{3}{4}$" BORDER ALL AROUND.
FONT: MISSION INN: TIFFANY HEAVY, 8" LETTERS
3700 AVE: TIFFANY BOLD, 3" LETTERS

MISSION INN LEGEND LAYOUT

PANEL SIZE: APPROX. 16.5" X 72"
LETTERS CUT IN REVERSE IN 3M 1175 BLUE TRANSPARENT ELECTROCUT FILM WHICH IS LAID OVER 3M DG3 4090T WHITE.
FONT: VAN BUREN: BASKERVILLE BOLD, 6.75" LETTERS
6300 BLVD: BASKERVILLE BOLD, 3.5" LETTERS
VETERENS MEMORIAL HIGHWAY: BASKERVILLE, 2.25" LETTERS

VAN BUREN LEGEND LAYOUT

APPROVED BY

CITY ENGINEER — DATE 5/18/11

MARK	REVISIONS	APPR.	DATE

CITY OF RIVERSIDE
PUBLIC WORKS DEPARTMENT

TRAFFIC SIGNAL STREET NAME SIGNS

STANDARD DRAWING NO. 663

Sheet 2 of 3

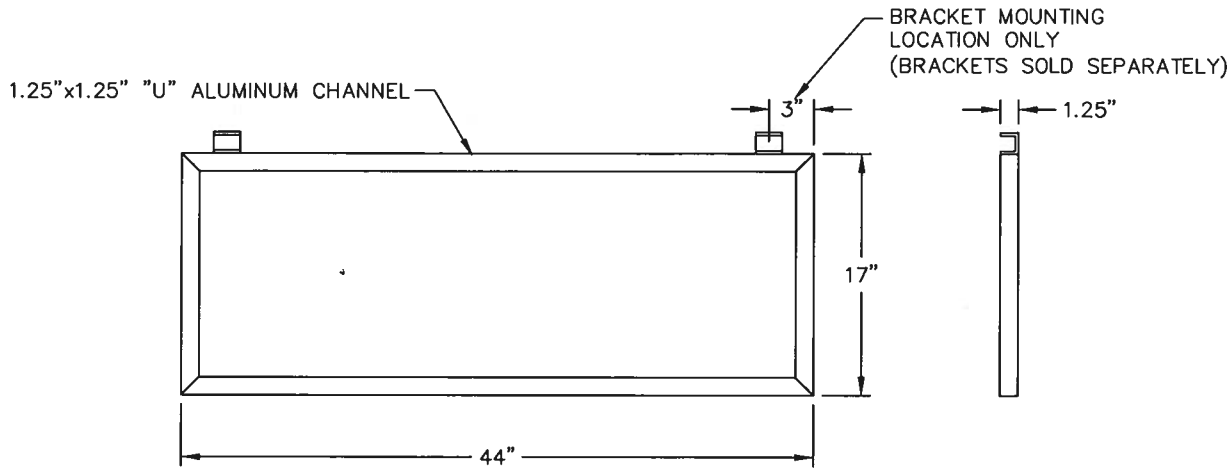

ALUMINUM FRAME (MAGNOLIA & MARKET)

SIDE VIEW

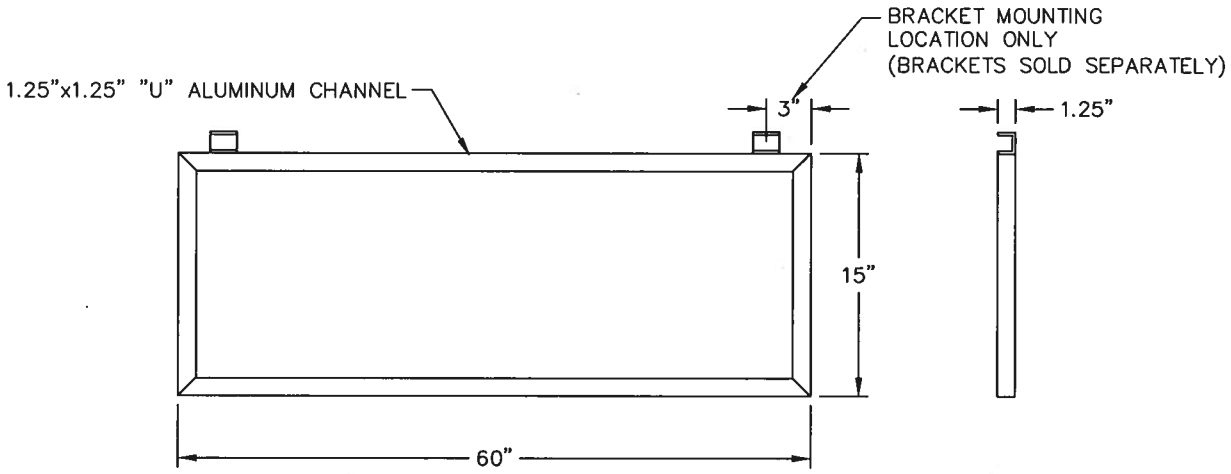

ALUMINUM FRAME (VICTORIA)

SIDE VIEW

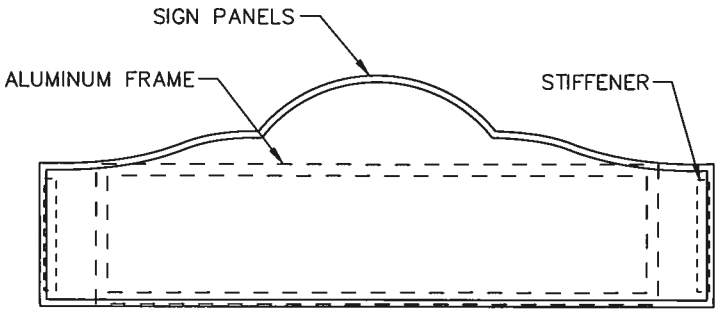

ASSEMBLY EXAMPLE

ORDERING INFORMATION:

SAFEWAY SIGN COMPANY OR APPROVED EQUAL
PHONE: (800) 637-7233
FAX: (760) 246-5512

GENERAL NOTES:

1. FRAME / HARDWARE ONLY, AND (2) 1.25" X 1.25" X 12"L ALUMINUM "U" CHANNEL STIFFENERS – SHIPPED LOOSE

APPROVED BY

CITY ENGINEER

5/18/11

DATE

MARK	REVISIONS	APPR.	DATE

CITY OF RIVERSIDE

PUBLIC WORKS DEPARTMENT

TRAFFIC SIGNAL STREET NAME SIGNS

STANDARD DRAWING NO. 663

Sheet 3 of 3

SIDEWALK AND SHOULDER MOUNTING HEIGHT AND LATERAL POSITIONS

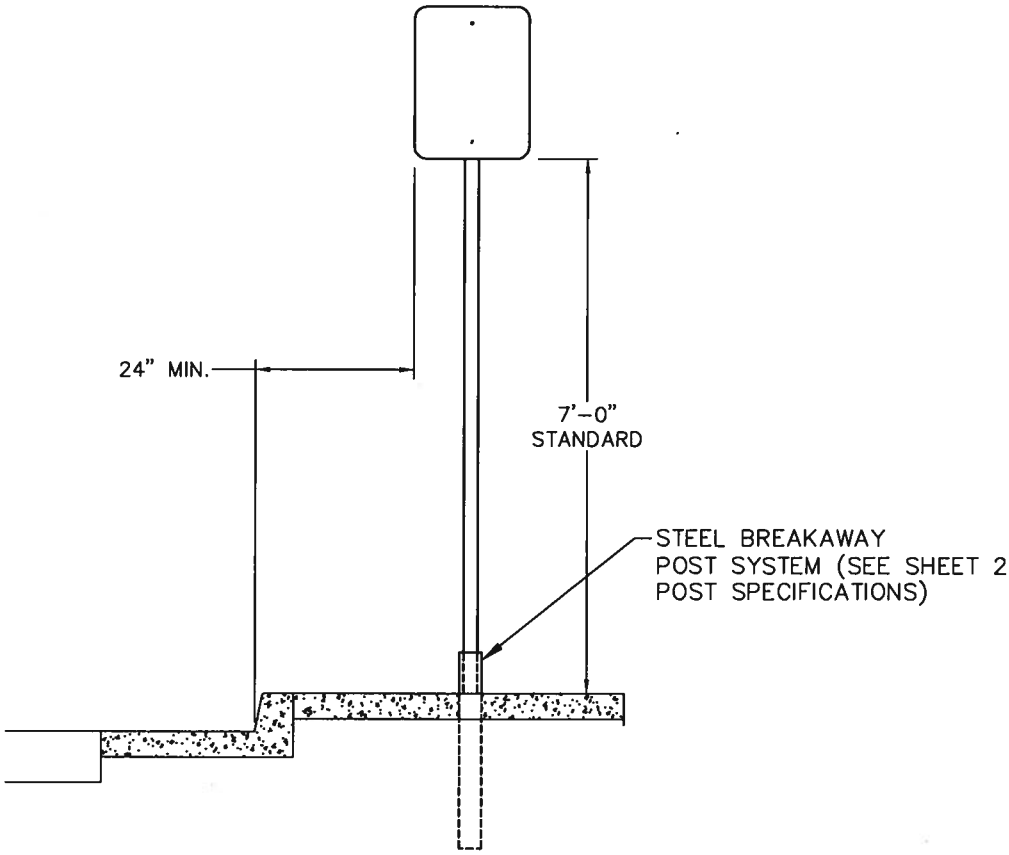

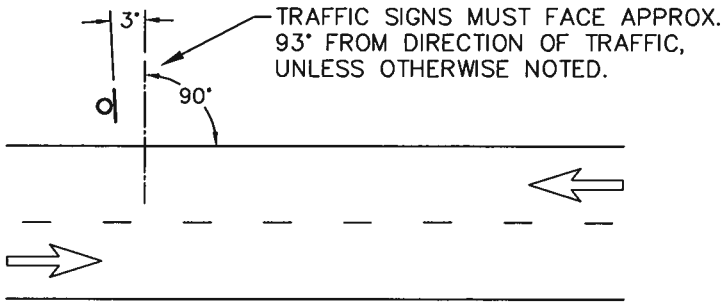

GENERAL NOTES:

1. MEDIAN MOUNTING: POSTS SHALL BE CENTERED IN MIDDLE OF MEDIAN, A MIN. OF 5' BEHIND THE MEDIAN NOSE.
2. REFER TO CITY STANDARD DWG. NO. 662 FOR THE MOUNTING LOCATION FOR SIGNS AT CURB RETURNS.
3. ANY VARIATIONS FROM THIS CITY STANDARD SHALL BE APPROVED BY THE CITY TRAFFIC ENGINEER.
4. STOP SIGNS SHALL BE 36" MIN. R4-7 SIGNS SHALL BE SYMBOL TYPE AND SHALL BE 20" X 30".

APPROVED BY

PUBLIC WORKS DIRECTOR — DATE 5/18/11

MARK	REVISIONS	APPR.	DATE

CITY OF RIVERSIDE
PUBLIC WORKS DEPARTMENT

SIGN STANDARDS

STANDARD DRAWING NO. 664

Sheet 1 of 3

THE CONTRACTOR SHALL FURNISH ALL TRAFFIC CONTROL SIGNS, HARDWARE, POSTS AND APPURTENANCES TO ERECT THE SIGNS AS SHOWN ON THE CONSTRUCTION PLANS AND/OR AS SPECIFIED. THESE SIGNS SHALL CONFORM O THE LATEST EDITION OF THE CALIFORNIA UNIFORM SIGN CHART AS ADOPTED BY THE STATE OF CALIFORNIA DEPARTMENT OF TRANSPORTATION.

SIGN BLANKS: BLANK MATERIAL SHALL BE MADE OF ALODINE 1200 TREATED ALUMINUM ALLOY 6061–T6 OR 5136–H36 MINIMUM GAUGE OF 0.080.

SIGN BACKGROUND, LEGENDS & SYMBOLS: 3M DIAMOND GRADE DG3 REFLECTIVE SHEETING (TYPE ASTM XI) MATERIAL SHALL BE USED FOR THE BACKGROUND OF TRAFFIC SIGNS. LEGEND AND BACKGROUND COLOR OF SIGNS SHALL CONFORM TO THE UNIFORM SIGN CHART. LEGENDS AND/OR SYMBOLS AND BORDERS SHALL BE APPLIED TO THE REFLECTIVE SHEETING MATERIAL EITHER THROUGH THE PROCESS OF SILK SCREENING OR CUT–OUT LETTERS, SYMBOLS AND BORDERS.

SIZE AND STROKE OF LEGEND: LETTERS, NUMBERS, SYMBOLS, BORDERS, SIZE AND STROKE SHALL CONFORM TO THE LATEST CALTRANS SIGN SPECIFICATIONS.

HARDWARE: ALL SIGNS ERECTED SHALL BE AFFIXED TO POSTS WITH EITHER GALVANIZED OR ALUMINUM HARDWARE NORMALLY AVAILABLE FROM VENDORS OF TRAFFIC SIGNS. THE FACE OF ALL SIGNS SHALL BE PROTECTED BY PLACING EITHER A FIBER OR NEOPRENE WASHER BETWEEN A METAL WASHER NEXT TO THE BOLT HEAD AND THE SIGN FACE. SIGN BACK BRACE SHALL BE USED ON ANY SIGN 36" X 36" OR LARGER.

POST: STEEL POST SHALL BE PROVIDED, UNLESS OTHERWISE INDICATED ON PLANS.

POST SPECIFICATION: BREAKAWAY SIGNPOST SYSTEM EQUIVALENT TO "EZE–ERECT" BY FRANKLIN STEEL CO. OR "TELESPAR" BY UNISTRUT CORP. SHALL BE USED. THE BASE POST OR SOCKET SHALL BE INSTALLED ACCORDING TO MANUFACTURER'S SPECIFICATIONS.

NOTE: THE BASE POST OR SOCKET OF ALL SIGNS TO BE ERECTED IN A NEW CONCRETE PAVED SURFACE, SUCH AS A SIDEWALK OR MEDIAN SHALL BE CENTERED IN A 12" SQUARE BOUND BY A WEAKENED PLANE JOINT.

APPROVED BY

PUBLIC WORKS DIRECTOR — DATE 5/18/11

MARK	REVISIONS	APPR.	DATE

CITY OF RIVERSIDE

PUBLIC WORKS DEPARTMENT

SIGN STANDARDS

STANDARD DRAWING NO. 664

SIGN STANDARDS

ALL TRAFFIC CONTROL SIGNS SHALL CONFORM TO THE LATEST EDITION OF THE STATE OF CALIFORNIA MANUAL ON UNIFORM TRAFFIC CONTROL DEVICES.

SIGN BLANK: BLANK MATERIAL SHALL BE MADE OF ALUMINUM.

SIGN SHEETING: DIAMOND GRADE (ASTM XI, DG3)

SIGN COLOR: ALL SIGN COLORS SHALL BE REFLECTORIZED, CONFORMING TO THE FOLLOWING REQUIREMENTS:

YELLOW & ORANGE SIGNS: REFLECTIVE SHEETING MATERIAL SHALL BE USED FOR BACKGROUND COLOR. LEGEND COLOR SHALL BE BLACK AND AFFIXED TO SHEETING MATERIAL EITHER THROUGH THE PROCESS OF SILK SCREENING OR NON-REFLECTIVE CUT-OUT LETTERS, SYMBOLS AND BORDERS.

SILVER SIGNS: REFLECTIVE SILVER (WHITE) SHEETING MATERIAL SHALL BE USED FOR BACKGROUND COLOR. LEGEND COLOR SHALL BE BLACK AND AFFIXED TO BACKGROUND AS DESCRIBED ABOVE FOR YELLOW SIGNS.

RED SIGNS: REFLECTIVE RED SHEETING SHALL BE USED FOR BACKGROUND COLOR IF REFLECTORIZED SILVER (WHITE) CUT-OUT LETTER AND BORDERS ARE UTILIZED. SILVER (WHITE) REFLECTIVE SHEETING SHALL BE USED FOR SILK SCREENING IN WHICH THE PROCESS WILL BE REVERSED TO PRODUCE A RED BACKGROUND WITH SILVER (WHITE) LEGEND.

BLACK SIGNS: NON-REFLECTIVE BLACK BACKGROUND COLOR. LEGEND COLOR SHALL BE REFLECTIVE SILVER (WHITE) AND AFFIXED TO BACKGROUND EITHER THROUGH THE PROCESS OF SILK SCREENING OR REFLECTIVE CUT-OUT LETTERS, NUMBERS, SYMBOLS AND BORDERS. NON-REFLECTIVE BORDERS MAY BE USED ONLY IF SIGN IS LARGER THAN 4' X 5' OR (20 SQ. FT.).

GREEN SIGNS: NON-REFLECTIVE GREEN BACKGROUND. LEGEND COLOR SHALL BE REFLECTIVE SILVER (WHITE) AND AFFIXED TO BACKGROUND AS DESCRIBED ABOVE FOR BLACK SIGNS.

LEGEND: LETTERS, NUMBERS, SYMBOLS, BORDERS, SIZE AND STROKE SHALL CONFORM TO THE LATEST EDITION OF THE STATE OF CALIFORNIA MANUAL ON UNIFORM TRAFFIC CONTROL DEVICES (MUTCD).

**** THE CONTRACTOR MUST OBTAIN WRITTEN APPROVAL FROM THE TRAFFIC ENGINEER PRIOR TO VARIANCES FROM THE ABOVE STANDARDS. ****

APPROVED BY

CITY ENGINEER — DATE 5/18/11

MARK	REVISIONS	APPR.	DATE

CITY OF RIVERSIDE
PUBLIC WORKS DEPARTMENT

SIGN STANDARDS

STANDARD DRAWING NO. 664

Sheet 3 of 3

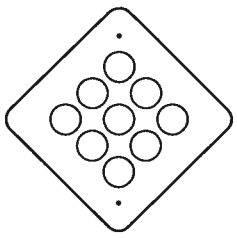

TYPE "N-4(CA)" MARKER

REFER TO CALTRANS SIGN SPECIFICATIONS FOR DIMENSIONS

TYPE "P" MARKERS

REFER TO CALTRANS SIGN SPECIFICATIONS FOR DIMENSIONS

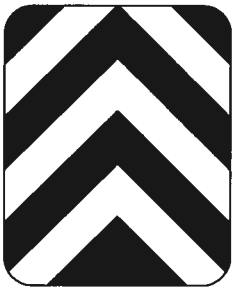

TYPE "R" MARKER

REFER TO CALTRANS SIGN SPECIFICATIONS FOR DIMENSIONS

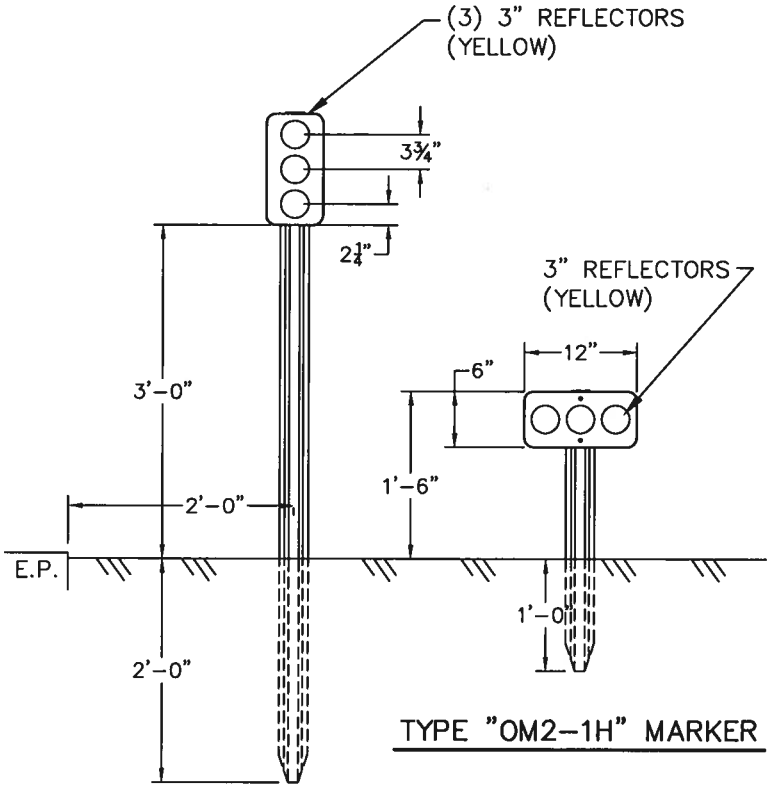

TYPE "OM2-1H" MARKER

TYPE "OM2-1V" MARKER

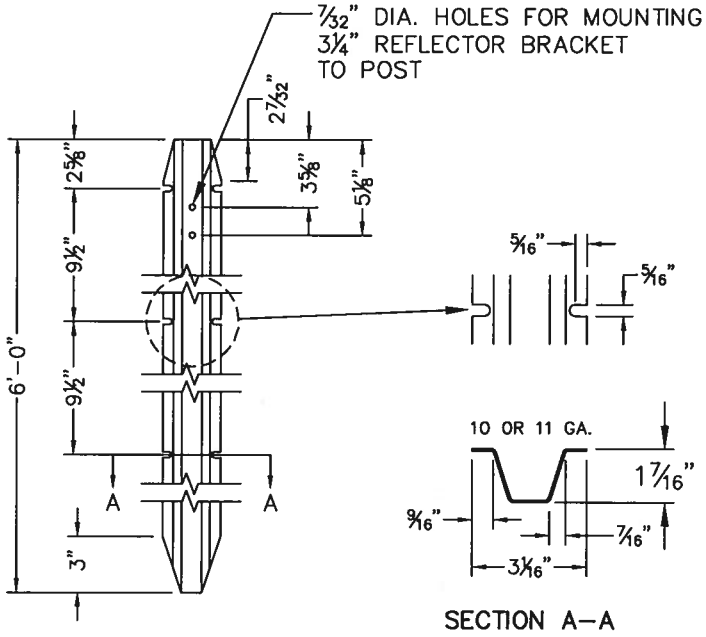

SECTION A-A

METAL MARKER POST

APPROVED BY

PUBLIC WORKS DIRECTOR

5/18/11

DATE

MARK	REVISIONS	APPR.	DATE

CITY OF RIVERSIDE

PUBLIC WORKS DEPARTMENT

SIGN MARKERS

STANDARD DRAWING NO. 665

Sheet 1 of 1

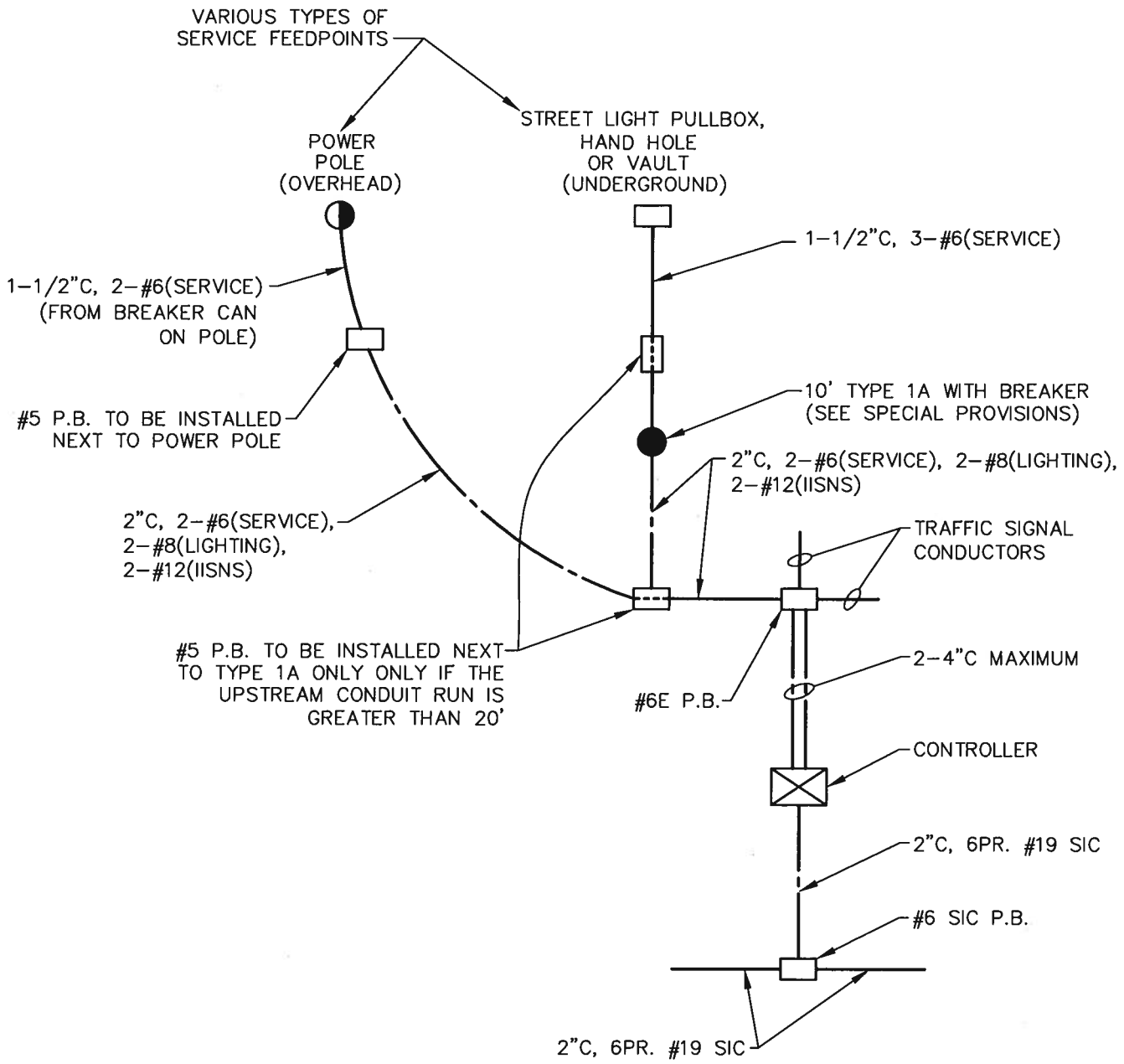

APPROVED BY

PUBLIC WORKS DIRECTOR — DATE 5/18/11

MARK	REVISIONS	APPR.	DATE

CITY OF RIVERSIDE

PUBLIC WORKS DEPARTMENT

ELECTRICAL SERVICE DETAILS TO TRAFFIC CONTROLLER

STANDARD DRAWING NO. 667

Sheet 1 of 1

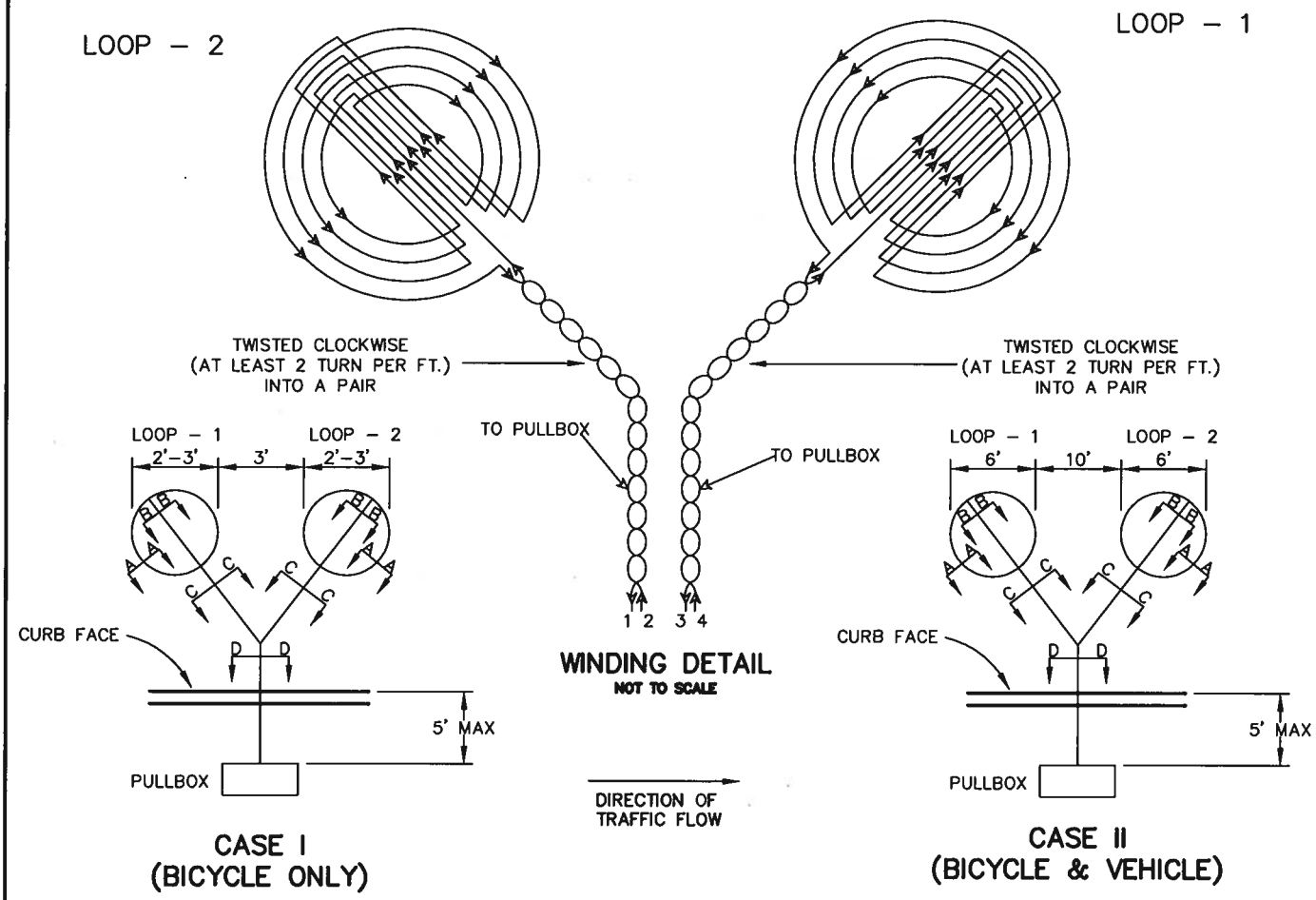

WINDING DETAIL
NOT TO SCALE

CASE I
(BICYCLE ONLY)

CASE II
(BICYCLE & VEHICLE)

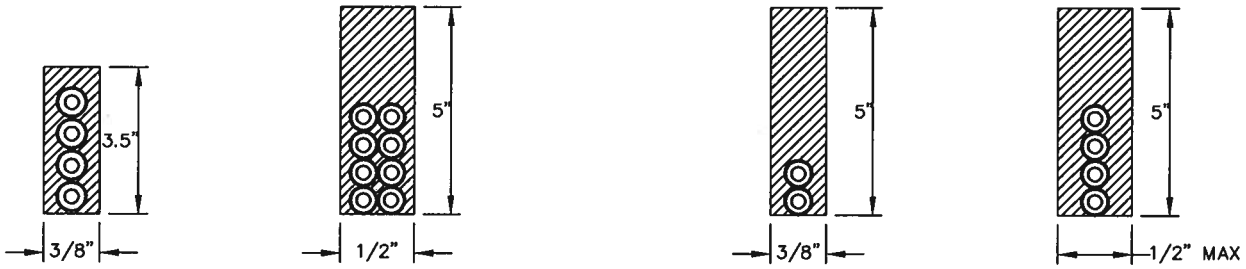

SECT. A–A SECT. B–B SECT. C–C SECT. D–D

*** DEPTH OF SLOT NOT TO EXCEED DEPTH OF PAVEMENT**

Notes:
1. INSTALL FOUR (4) COMPLETE ALTERNATING TURNS OF LOOP CONDUCTORS, UNLESS OTHERWISE SPECIFIED.
2. USE CASE 1 LOOPS FOR BIKE LANE INSTALLATIONS. USE CASE II LOOPS WHEN VEHICULAR LOOPS ARE INTENDED TO DETECT BICYCLES.
3. AN OCTAGONAL SHAPED LOOP OR OTHER NON–ROUND SHAPED LOOP MAY BE USED INSTEAD OF THE ROUND–LOOP WITH PRIOR ENGINEER'S APPROVAL
4. SAME WINDING PATTERN TO BE USED IN BOTH LOOPS WITH ONE (1) PAIR FROM EACH LOOP LEADING TO THE PULLBOX.
5. LOOPS INSTALLED IN BIKE LANES WITH PARKING SHALL BE PLACED WITH THE NEAR EDGE OF THE LOOP ONE (1) FOOT TO THE RIGHT OF THE BIKE LANE DELINEATION LINE UNLESS OTHERWISE NOTED
6. LOOPS INSTALLED IN BIKE LANES ADJACENT TO THE ROADSIDE WITHOUT PARKING SHALL BE CENTERED IN THE BIKE LANE, OR BETWEEN THE GUTTER AND THE BIKE LANE DELINEATION LINE, UNLESS OTHERWISE NOTED.
7. ANY APPROVED NON–ROUND SHAPED LOOPS SHALL CONFORM TO ALL OTHER SPECIFICATIONS SHOWN ON THIS STANDARD DRAWING
8. LOOP #2 MAY BE A TYPE "D" MODIFIED OR TYPE "E" LOOP DETECTOR. CONTRACTOR SHALL REFER TO PLAN OR COORDINATE WITH ENGINEER TO DETERMINE TYPE.

APPROVED BY
CITY ENGINEER — DATE 5/18/11

MARK	REVISIONS	APPR.	DATE

CITY OF RIVERSIDE
PUBLIC WORKS DEPARTMENT

TYPE "D" DETECTOR

STANDARD DRAWING NO. 670
Sheet 1 of 1

TYPICAL LOCATION DETAIL
SLOPE AND DISTANCE PER UNIFORM BUILDING CODE CH. 70

NO SCALE

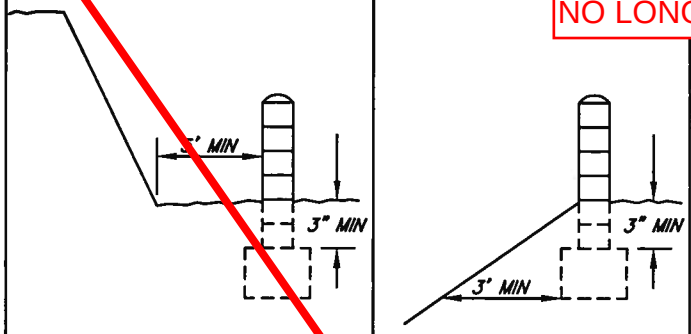

NO LONGER IN USE.

THIS WALL IS NOT TO BE USED AS A RETAINING WALL

WALL HEIGHT	VERTICAL BAR SPACING "A"	FOOTING	
		WIDTH "W"	HEIGHT "H"
LESS THAN 3'	NO REINFORCING REQUIRED	12"	6"
3'	48"	12"	6"
4'	48"	12"	9"
5'	32"	14"	12"
6'	24" *	16"	12"

* ALTERNATE BARS CAN BE CUT OFF AT MID-HEIGHT.

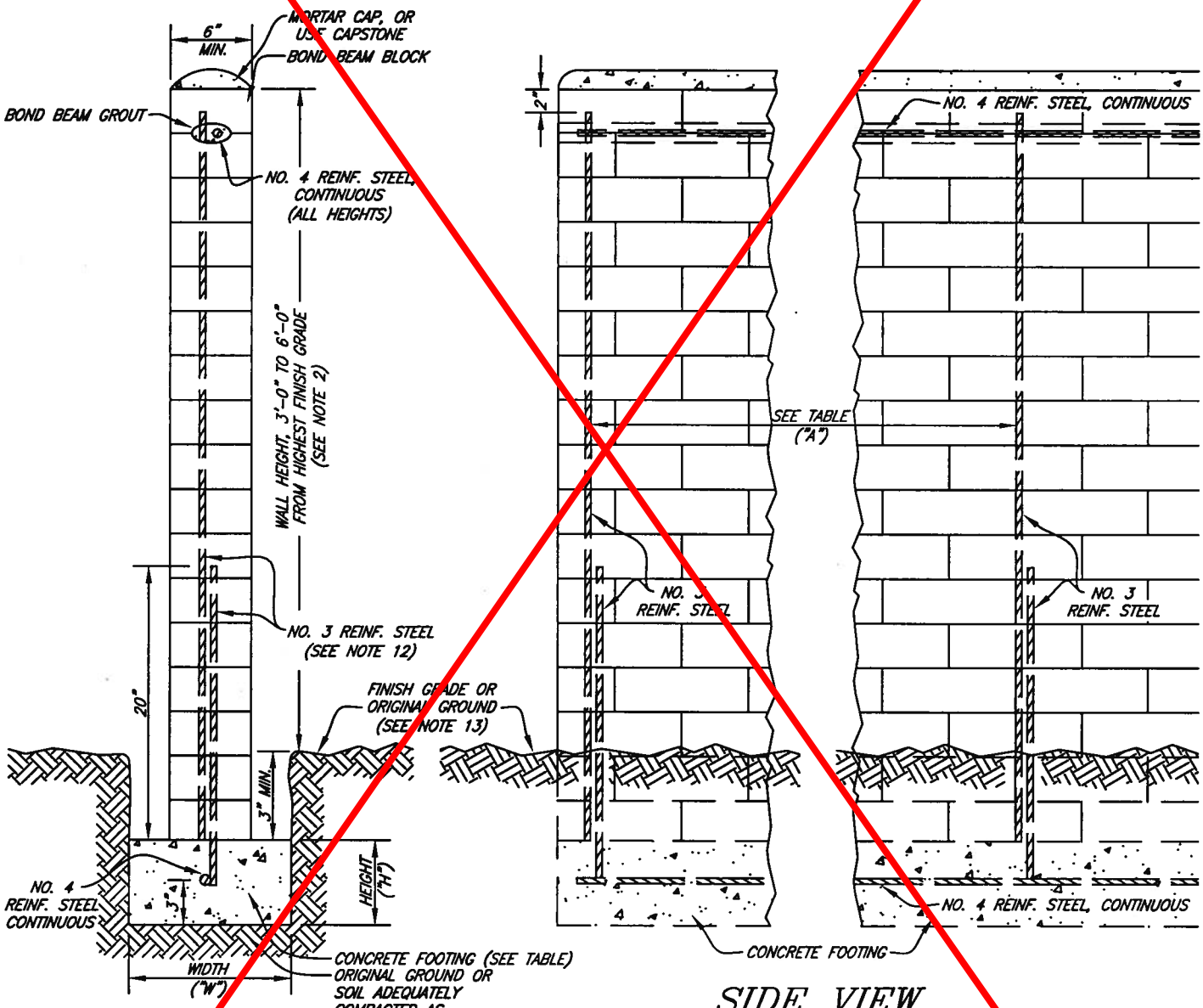

SCALE: 1"=1'-0"

APPROVED BY

CITY ENGINEER — DATE 5/18/11

MARK	REVISIONS	APPR.	DATE

CITY OF RIVERSIDE

PUBLIC WORKS DEPARTMENT

CONCRETE BLOCK WALL (FREESTANDING)

STANDARD DRAWING NO. 704

Sheet 1 of 2

NO LONGER IN USE.

NOTES:

1. Wall height, 3'0" max. front setback area; 6'0" max. side and rear area.
2. Grout all cells containing reinforcing steel.
3. Construction shall be of the best quality workmanship and all walls shall be laid true and plumb.
4. Footing concrete shall be a 6-sack mix with a 28-day strength of 3,250 psi. Max. aggregate size 1 $\frac{1}{2}$", with 5" slump. (Green Book Concrete Class 560-C-3250)
5. Reinforcing steel shall be deformed conforming to Uniform Building Code Standards, Section 2607, A.S.T.M. Specifications A615-75, or "Green Book" Section 201-2.2
6. Mortar joints shall be appropriate to the block, $\frac{3}{8}$" or $\frac{1}{2}$", $\frac{3}{4}$" min. Mortar shall be freshly prepared and uniformly mixed in ratio one part cement, $\frac{1}{4}$ part lime putty, 3 $\frac{1}{2}$ parts sand, and shall conform to A.S.T.M. Specs. 476-71, Uniform Building Code Sec. 2403, Type M Mortar (1976), or "Green Book" Specs. Type F Mortar, Sec. 202-2.1.2
7. Grout shall be of fluid consistency and mixed in a ratio of one part cement, 3 parts sand; or one part cement, 2 parts sand, 2 parts pea gravel. Aggregate shall conform to A.S.T.M. Specs. C 144-70; grout shall conform to A.S.T.M. C 404-70 (1975); Uniform Building Code Section 2043, or "Green Book" Section 202.2.1.2.
8. Footing width design for walls 4' to 6' in height is based upon 2,000 lbs. sq. ft. allowable soil pressure. Footing width must be designed by a Registered Civil Engineer where required by special soil conditions.
9. Splices in horizontal reinforcing bars shall be lapped 40 diameters and wired together.
10. No. 3 reinforcing steel is $\frac{3}{8}$" dia., No. 4 is $\frac{1}{2}$" dia.
11. Concrete blocks for walls shown on plans to be approved by the City shall be in a style as approved by the Planning Department and conform to Grade N-1, A.S.T.M. C 90 Specs., latest edition; Uniform Building Code Section 2403; or "Green Book" Specs., Section 202-2.1.1.
12. Two (2) bars with splice is optional; can use one (1) continuous bar for reinforcement. Bars shall be centered in cells.
13. The near bottom edge of the footing shall be 3' from the face of a fill slope. See Typical Location Detail on Sheet 1.
14. Green Book references refer to "Standard Specifications for Public Works Construction," latest edition.

APPROVED BY

CITY ENGINEER — DATE 5/18/11

MARK	REVISIONS	APPR.	DATE

CITY OF RIVERSIDE

PUBLIC WORKS DEPARTMENT

CONCRETE BLOCK WALL (FREESTANDING)

STANDARD DRAWING NO. 704

Sheet 2 of 2

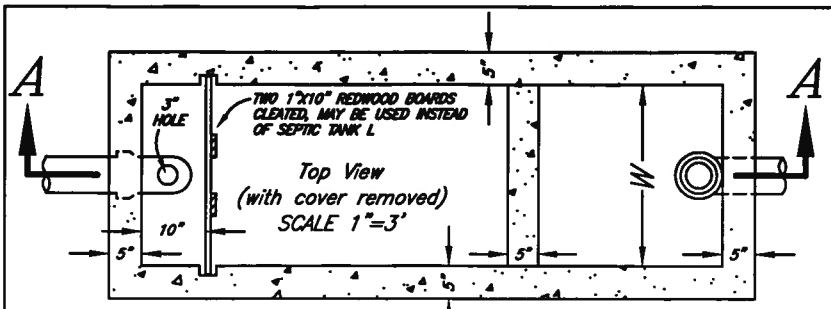

NOTES:

1–ALL DIMENSIONS SHOWN ARE MINIMUM UNLESS OTHERWISE INDICATED.

2–CONCRETE SHALL BE 560 D 2500.

3–BACKFILL FOR SEPTIC TANK AND DRY WELL TO BE DRY TAMPED. EXCAVATION VOIDS FOR SEEPAGE PIT TO BE BACKFILLED WITH 6 INCHES OF 3/4" GRAVEL OR ROCK.

4–SEPTIC TANK OPTIONAL CONSTRUCTION: CONCRETE BLOCK WALLS ONLY, 1/2" PLASTER ALL INTERIOR WALLS.

5–THESE STRUCTURES SHALL BE IN CONFORMANCE WITH THE CURRENT EDITION OF THE "UNIFORM PLUMBING CODE."

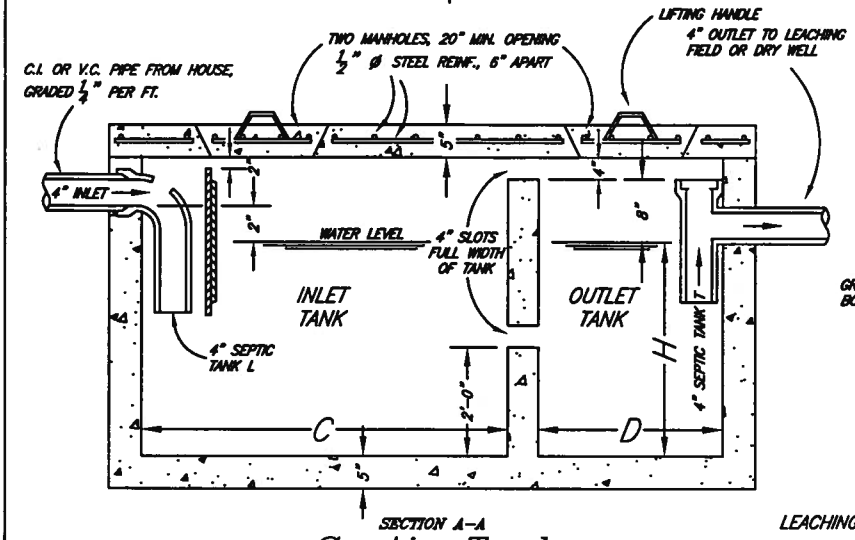

SECTION A–A

Septic Tank

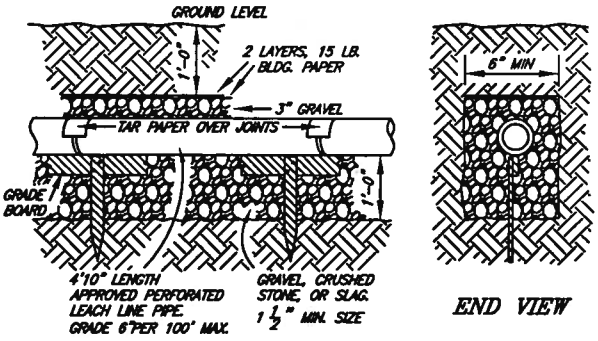

SECTION

LEACH LINE

LEACHING FIELD TO BE A MINIMUM OF 150 SQ. FT. WITH THE APPROVAL OF THE PLUMBING INSPECTOR.
(NO SCALE)

SEPTIC TANK							
Minimum Dimensions					Gallons Capacity		
NO OF PEOPLE	LENGTH "C"	LENGTH "D"	WIDTH "W"	DEPTH "H"	INLET TANK	OUTLET TANK	TOTAL CAPACITY
7 OR LESS	6'–0"	3'–0"	3'–0"	4'–0"	540	270	810
9	7'–0"	3'–8"	3'–0"	4'–0"	630	330	960
12	8'–0"	4'–0"	3'–6"	4'–0"	840	420	1260
15	9'–0"	4'–6"	4'–0"	4'–0"	1080	540	1620
50	16'–0"	8'–0"	5'–0"	5'–0"	3000	1500	4500
100	20'–0"	10'–0"	6'–0"	6'–0"	5400	2700	8100

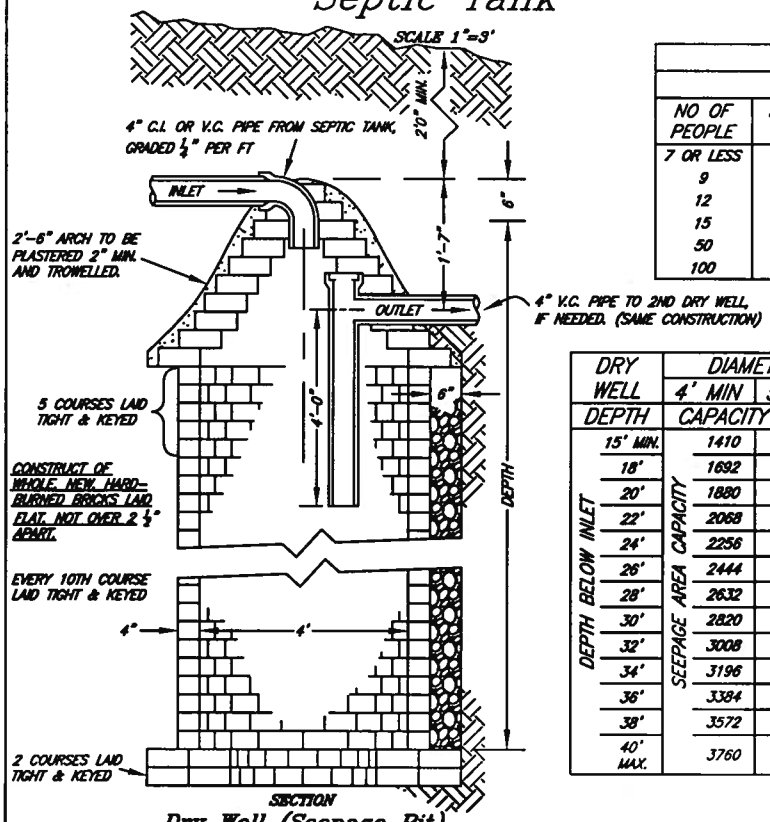

SECTION

Dry Well (Seepage Pit)

MAY BE USED IN PLACE OF LEACHING FIELD ONLY BY SPECIAL PERMIT.
MUST HAVE DOUBLE THE CAPACITY OF THE SEPTIC TANK.
SCALE 1"=3'

DRY WELL DEPTH	DIAMETER 4' MIN CAPACITY	DIAMETER 5' TYP CAPACITY
15' MIN.	1410	2203
18'	1692	2644
20'	1880	2938
22'	2068	3231
24'	2256	3525
26'	2444	3819
28'	2632	4113
30'	2820	4406
32'	3008	4700
34'	3196	4994
36'	3384	5288
38'	3572	5581
40' MAX.	3760	5875

DEPTH BELOW INLET — SEEPAGE AREA CAPACITY — GALS

Required Clearances			
	SEPTIC TANK	LEACHING FIELD	DRY WELL
BLDGS & STRUCTURES	5'	8'	8'
PROPERTY LINE ADJOINING PRIVATE PROPERTY	5'	5'	8' (OR 10' OTHER BLDG.)
WATER SUPPLY WELLS	50'	100'	150'
STREAMS	50'	100'	100'
LARGE TREES	10'	10'	10'
SEEPAGE PITS OR DRY WELLS	5'	5'	12'
LEACHING FIELDS	5'	4'	5'
DOMESTIC WATER LINES	5'	5'	5'

NOTE: GROUND WATER MUST BE A MINIMUM OF 10' BELOW THE BOTTOM OF A DRY WELL.

APPROVED BY

CITY ENGINEER — DATE 5/18/11

MARK	REVISIONS	APPR.	DATE

CITY OF RIVERSIDE

PUBLIC WORKS DEPARTMENT

PRIVATE SEWAGE DISPOSAL STRUCTURES
(constructed in place)

STANDARD DRAWING NO. 740

Sheet 1 of 1