PARK AND RECREATION OFFICES

WHITE PARK   RIVERSIDE, CALIFORNIA

APPLICANT: Riverside Park and Recreation
3900 Main St.
Riverside, CA. 92522
909.715.3470
Fax: 909.715.3467
Andrew Emery, Senior Park Director

ARCHITECT: Kroh/Broeske Architects
6180 Brockton Ave.
Riverside, CA 92506
909.788.5940
Fax: 909.275.0149
Jim Broeske, Project Architect

STRUCTURAL ENGINEER: Johnson & Neilsen Associates
647 N. Main St. suite 4B
Riverside, CA 92501
909.686.5122
Fax: 909.686.6752

MECHANICAL ENGINEER: Advanced Environmental Engineering
3110 S. Sycamore St.
Santa Ana, CA. 92707
714.668.9080
Fax: 714.668.9080

ELECTRICAL ENGINEER: Consolidated Engineering
14661 Myford Rd. Suite C
Tustin, CA. 92780
714.832.6346
Fax: 714.832.9427

PROJECT DIRECTORY

A.C.	ASPHALTIC CONCRETE
AC.T	ACOUSTIC TILE
AC.PL.	ACOUSTICAL PLASTER
ADD.	ADDENDUM
ADJ.	ADJUSTABLE
ADJC.	ADJACENT
A.F.F.	ABOVE FINISHED FLOOR
ALT.	ALTERNATE
AL.	ALUMINUM
APPROX.	APPROXIMATELY
ASB.	ASBESTOS
BD.	BOARD
BET.	BETWEEN
BLDG.	BUILDING
BLK.	BLOCK
BLKG.	BLOCKING
BM.	BEAM
BOT.	BOTTOM
BSMT.	BASEMENT
CPT.	CARPET
CAB.	CABINET
CA.B.	CATCH BASIN
C.C.	CENTER TO CENTER
CEM.	CEMENT
CEM.PL.	CEMENT PLASTER
CT.	CERAMIC TILE
C.F.	CURB FACE
C.I.	CAST IRON
C.J.	CONSTRUCTION JOINT
C.L.	CHAIN LINK
CLG.	CEILING
CLOS.	CLOSET
CLR.	CLEAR
C.O.	CLEANOUT
COL.	COLUMN
COMP.	COMPOSITION
CMU.	CONCRETE MASONRY UNIT
CONC.	CONCRETE
CORR.	CORRIDOR
CONT.	CONTINUOUS
CONTR.	CONTRACTOR
CL.	CENTERLINE
CU.	COPPER
CERT.	CERAMIC TILE
CTSK.	COUNTERSUNK
DET.	DETAIL
DSP.	DRY STANDPIPE
DIA.	DIAMETER
DIM.	DIMENSION
DIV.	DIVISION
DOCS.	DOCUMENTS
DN.	DOWN
DR.	DOOR
D.S.	DOWNSPOUT
DWGS.	DRAWINGS
EA.	EACH
E.J.	EXPANSION JOINT
E.P.	ELECTRIC PANEL
EL.	ELEVATION
ELECT.	ELECTRIC
ENAM.	ENAMEL
E.W.C.	ELECTRIC WATER COOLER
EQ.	EQUAL
EXIST.	EXISTING
EXP.	EXPOSED
EXPAN.	EXPANSION
EXT.	EXTERIOR
F.D.	FLOOR DRAIN
FLOUR.	FLUORESCENT
F.S.	FACE OF STUDS
F.FL.	FINISHED FLOOR
F.O.F.	FACE OF FINISH
F.GR.	FINISH GRADE
F.E.C.	FIRE EXTINGUISHER CABINET
F.H.C.	FIRE HOSE CABINET
FIN.	FINISH
FL.	FLOOR
F.S.	FLOOR SINK

FURR.	FURRING
FLASH.	FLASHING
FPRF'G.	FIREPROOFING
FT.	FEET
FTG.	FOOTING
GA.	GAUGE
GALV.	GALVANIZED
G.I.	GALVANIZED IRON
GL.	GLASS
GR.	GRADE
GRD.	GROUND
GYP.	GYPSUM
G.B.	GYPSUM BOARD
H.B.	HOSE BIBB
H.C.	HOLLOW CORE
H.M.	HOLLOW METAL
HORIZ.	HORIZONTAL
H.PT.	HIGH POINT
HR.	HOUR
HT.	HEIGHT
HTG.	HEATING
HWD.	HARDWOOD
HWRE.	HARDWARE
I.D.	INSIDE DIAMETER
INFO.	INFORMATION
INT.	INTERIOR
INSUL.	INSULATION
INV.	INVERT
ISOL.	ISOLATION
JAN.	JANITOR
JT.	JOINT
LAB.	LABORATORY
LAM.	LAMINATED
LB.	POUNDS
LAV.	LAVATORY
LT.	LIGHT
LT.WT.	LIGHT WEIGHT
L.PT.	LOW POINT
LKR.	LOCKER
MACH.	MACHINE
MAINT.	MAINTENANCE
MFR.	MANUFACTURER
M.H.	MANHOLE
MATL.	MATERIAL
MAX.	MAXIMUM
MECH.	MECHANICAL
MEMB.	MEMBRANE
MET.	METAL
MIN.	MINIMUM
MISC.	MISCELLANEOUS
M.O.	MASONRY OPENING
MTD.	MOUNTED
NAT.	NATURAL
NAT.GR.	NATURAL GRADE
N.I.C.	NOT IN CONTRACT
NO.	NUMBER
NOM.	NOMINAL
NTS.	NOT TO SCALE
O.A.	OVERALL
O.C.	ON CENTER
O.D.	OUTSIDE DIAMETER
O.D.	OVERFLOW DRAIN
O.F.	OUTSIDE FACE
OPG.	OPENING
OPP.	OPPOSITE

PT.	PAINT
P.L.	PROPERTY LINE
PRTN.	PARTITION
P.L.	PLATE
PLAS.	PLASTER
PLAT.	PLATFORM
PLWD.	PLYWOOD
POL.	POLISHED
PR.	PAIR
PROP.	PROPERTY
PT.	PAINT
Q.T.	QUARRY TILE
R.	RISER
RAD.	RADIUS
R.C.	REINFORCED CONCRETE
RD.	ROUND
RF.DR.	ROOF DRAIN
RECT.	RECTANGULAR
REF.	REFERENCE
RGTR.	REGISTER
REINF.	REINFORCED
REQ.	REQUIRED
RESIL.	RESILIENT
RET.	RETAINING
REV.	REVISION
RFG.	ROOFING
RM.	ROOM
R.O.	ROUGH OPENING
RUB.	RUBBER
S.C.	SOLID CORE
S.D.	STORM DRAIN
SCHED.	SCHEDULE
SECT.	SECTION
SIM.	SIMILAR
SHT.	SHEET
S.J.	SEPARATION JOINT
SM.	SMOOTH
SM.PL.	SMOOTH PLASTER
SPEC.	SPECIFICATIONS
S.S.	SERVICE SINK
STL.	STEEL
SS.	STAINLESS STEEL
STAT.	STATIONARY
STOR.	STORAGE
STD.	STANDARD
STRPG.	STRIPPING
STRUCT.	STRUCTURAL
SQ.	SQUARE
SUSP.	SUSPENDED
SYM.	SYMMETRICAL
T.R.D.	TREAD
TEL.	TELEPHONE
TEMP.	TEMPERATURE
TERR.	TERRAZZO
THLD.	THRESHOLD
THERM.	THERMOSTAT
THK.	THICK
T.O.	TOP OF
TRANF.	TRANSFORMER
TRANS.	TRANSLUCENT
T.P.	TOP OF PAVEMENT
T.S.	TOP OF SLAB
T.W.	TOP OF WALL
TYP.	TYPICAL
U.N.O.	UNLESS NOTED OTHERWISE
VAR.	VARIES
VER.	VERIFY
VERT.	VERTICAL
VEST.	VESTIBULE
V.T.	VINYL TILE
W/	WITH
WAIN.	WAINSCOT
W.C.	WATER CLOSET
WD.	WOOD
W.G.	WIRE GLASS
WIND.	WINDOW
W.O.	WITH OUT

ABBREVIATIONS

1. INSULATE ALL WALLS WITH R-19 BATT, AS NOTED ON PLANS.
2. THIS PROJECT SHALL CONFORM TO THE 1997 EDITIONS OF THE UNIFORM BUILDING CODE, UNIFORM MECHANICAL CODE, UNIFORM PLUMBING CODE, THE 1993 EDITION OF THE NATIONAL ELECTRICAL CODE, STATE TITLE 24 REGULATIONS, AND CITY AND COUNTY LAWS AND ORDINANCES.
3. FIRE SPRINKLER SYSTEM LAYOUT TO BE ENGINEERED AND INSTALLED PER CODE WITH APPROVAL BY ARCHITECT AND OWNER. CONTRACTOR TO PROVIDE COMPLETE FIRE SPRINKLER ENGINEERED DRAWINGS TO CITY AND \ OR COUNTY FOR APPROVAL PRIER TO INSTALATION.
4. ALL INTERIOR FINISHES SHALL BE OF CLASS 3 FLAME SPREAD RATING (MIN.) FOR OCCUPANCY GROUP B.
5. ALL DUCTS WHICH PENETRATE OCCUPANCY OR AREA SEPARATION WALLS SHALL HAVE FIRE DAMPERS.
6. CONTRACTOR SHALL MAINTAIN THE MAXIMUM NUMBER OF REQUIRED EXITS AND THEIR SEPARATIONS UNTIL EGRESS IS PROVIDED FROM THE STRUCTURE.
7. CONTRACTOR TO POST ALL REQUIRED EXIT SIGNS PER CODE REQUIREMENTS.
8. ALL EXITS SHALL BE LIGHTED WITH AT LEAST ONE FOOT CANDLE AT FLOOR LEVEL.
9. ALL EXITS ARE TO OPERABLE FROM INSIDE WITHOUT THE USE OF A KEY OR SPECIAL KNOWLEDGE. IN LIEU OF THE ABOVE THE CONTRACTOR MAY PROVIDE A SIGN READING "THIS DOOR TO REMAIN UNLOCKED DURING BUSINESS HOURS". THIS SIGNAGE ONLY APPLIES TO THE MAIN EXIT.
10. ALL EXIT DOORS SHALL SWING IN THE DIRECTION OF EGRESS AS REQUIRED PER CODE.
11. ALL EXIT DOORS WHICH ARE USED FOR DISABLED ACCESS SHALL HAVE, ON BOTH SIDES OF THE DOOR, A FLOOR OR LANDING NOT MORE THAN 1/2" BELOW THE THRESHOLD.
12. CORRIDORS MUST PROVIDE CONTINUOUS PROTECTION TO THE EXTERIOR OF THE BUILDING.
13. CORRIDORS SERVING 30 OR MORE OCCUPANTS SHALL HAVE WALLS AND CEILINGS OF ONE-HOUR CONSTRUCTION. BUT, CORRIDOR WALLS AND CEILINGS NEED NOT BE OF FIRE-RESISTIVE CONSTRUCTION WITHIN OFFICE SPACES HAVING AN OCCUPANT LOAD 100 OR LESS WHEN THE ENTIRE STORY IN WHICH THE SPACE IS LOCATED IS EQUIPPED WITH AN AUTOMATIC SPRINKLER SYSTEM THROUGHOUT THE BUILDING.
14. DOOR HARDWARE SHALL BE OF THE LEVER OR PUSH TYPE, MOUNTED CENTERED BETWEEN 30" & 44" ABOVE THE FLOOR AND BE OPERABLE WITH A MAXIMUM EFFORT OF 8.5 LBS. FOR EXTERIOR DOORS AND 5 LBS. FOR INTERIOR DOORS.
15. THE LOWER 10" OF THE DOOR SHALL BE OF SMOOTH, PLANE SURFACE (NO RECESS OR TRAP) EXCEPT AT AUTOMATIC AND SLIDING DOORS.
16. WHEN LOCATED ON ACCESSIBLE FLOORS, SANITARY FACILITIES SHALL BE MADE ACCESSIBLE TO PHYSICALLY HANDICAPPED.
17. DOORWAYS SHALL HAVE 32" MINIMUM CLEAR OPENING WIDTH.
18. THERE SHALL BE A LEVEL AREA WITH 60" CLEAR DEPTH IN THE DIRECTION OF THE DOOR SWING, AND A LEVEL AREA WITH 44" CLEAR DEPTH IN OPPOSITE DIRECTION OF DOOR SWING.
19. SINGLE ACCOMMODATION TOILET FACILITIES
   a) WATER CLOSET SHALL BE LOCATED 28" FROM A FIXTURE OR 32" FROM A WALL.
   b) MINIMUM CLEAR SPACE IN FRONT OF WATER CLOSET SHALL BE 48".
   c) IN AN EXISTING BUILDING, A SINGLE ACCOMMODATION TOILET MAY HAVE A SPACE 36"W X 48"L IN FRONT OF WATER CLOSET.
20. GRAB BARS AT WATER CLOSET
   a) ONE AT SIDE 42" LONG EXTENDING 24" IN FRONT OF WATER CLOSET: ONE AT REAR 36" LONG CENTERED ON WATER CLOSET; BOTH MOUNTED 33" ABOVE FLOOR. WHERE A TANK-TYPE TOILET IS USED,GRAB BAR MAY BE AS HIGH AS 36".
   b) BARS SHALL BE 1-1/4" TO 1-1/2" IN DIAMETER WITH 1-1/2" CLEARANCE TO WALL.
   c) BAR FASTENERS AND MOUNTING SUPPORT SHALL BE ABLE TO WITHSTAND 250 LBS./FT. IN BENDING, SHEAR AND TENSION.
21. WATER CLOSET
   a) HEIGHT OF WATER CLOSET SEAT SHALL BE 17" TO 19" ABOVE FLOOR.
   b) CONTROLS SHALL BE OPERABLE WITH ONE HAND, AND SHALL NOT REQUIRE TIGHT GRASPING, PINCHING OR TWISTING OF THE WRIST.
   c) CONTROLS FOR THE FLUSH VALVES SHALL BE MOUNTED ON THE WIDE SIDE OF TOILET AREAS, NO MORE THAN 44" ABOVE THE FLOOR.
   d) THE FORCE REQUIRED TO ACTIVATE CONTROLS SHALL BE NO GREATER THAN 5 LBS. FORCE.
22. LAVATORIES
   a) PROVIDE 30" X 48" CLEAR FLOOR SPACE FOR FORWARD APPROACH. SAID CLEAR FLOOR SPACE MAY INCLUDE KNEE AND TOE SPACE UNDER LAVATORY DESCRIBED BELOW.
   b) PROVIDE CLEAR SPACE BENEATH LAVATORIES 29"H X 30"W X 8"D AT TOP AND 9"H X 30"W X 17"D AT BOTTOM FROM FRONT OF LAVATORY (TOE SPACE). THE MAXIMUM COUNTER SURFACE HEIGHT SHOULD BE 34".
   c) HOT WATER AND DRAIN PIPES UNDER LAVATORIES SHALL BE INSULATED.
   d) FAUCET CONTROLS AND OPERATING MECHANISM (OPERABLE WITH ONE HAND) SHALL BE OF THE TYPE NOT REQUIRING TIGHT GRASPING, PINCHING OR TWISTING OF THE WRIST (SUCH AS LEVER-OPERATED) AND AN OPERATING FORCE NOT EXCEEDING 5 LBS.
   e) IF SELF-CLOSING VALVES ARE USED, THEY SHALL REMAIN OPEN FOR AT LEAST 10 SECONDS.
23. TOILET ROOM ACCESSORIES
   a) MIRROR BOTTOM EDGE SHALL BE LOCATED 40" MAX. ABOVE FLOOR.
   b) TOILET TISSUE DISPENSERS SHALL BE MOUNTED WITHIN 12" FROM THE FRONT EDGE OF TOILET SEAT.
   c) OPERATING PARTS OF DISPENSING AND DISPOSAL FIXTURES (TOWELS, WASTE, COIN SLOTS, ETC.) SHALL BE WITHIN 40" OF FLOOR.
24. SANITARY FACILITIES IDENTIFICATION
   a) ON DOORWAYS LEADING TO SANITARY FACILITIES THE SYMBOLS TO BE PROVIDED ARE 12" EQUILATERAL TRIANGLE FOR MEN, 12" DIA. CIRCLE FOR WOMEN, AND 1/4" THICK, CENTERED ON DOOR, 60"H AND CONTRASTING COLOR. UNISEX FACILITIES SHALL BE IDENTIFIED BY THE CIRCLE WITH TRIANGLE SUPERIMPOSED WITHIN THE CIRCLE.
25. ADDITIONS, ALTERATIONS AND REPAIRS TO EXISTING BUILDINGS SHALL COMPLY WITH THE PROVISIONS OF TITLE 24. ADDITIONALLY:
   a) THE PRIMARY ENTRANCE TO THE BUILDING AND PATH OF TRAVEL TO THE SPECIFIC AREA SHALL BE ACCESSIBLE TO THE HANDICAPPED PERSONS. THERE MUST BE COMPLIANCE, BEGINNING FROM THE EXISTING PARKING AREA AND LEADING TO THE AREA OF ALTERATION.
   b) EXISTING REST ROOMS, WATER FOUNTAINS, AND PUBLIC TELEPHONES WHICH SERVE SAID SPECIFIC AREA MUST BE ACCESSIBLE TO AND FUNCTIONAL FOR HANDICAPPED PERSONS.
   c) INFORMATION REGARDING HANDICAPPED ACCESSIBILITY SHALL BE POSTED IN LOBBY.
26. PROVIDE EXIT SIGNS FOR ALL ROOMS OR AREAS THAT REQUIRED TWO EXITS. PROVIDE BACKUP POWER FOR THE SIGNS FROM EITHER STORAGE BATTERIES OR AN ON-SITE GENERATOR (U.B.C. SECTION 1013) SEE ELECTRICAL DRAWINGS.

ADDITIONAL GENERAL NOTES

A. ALL INTERIOR GYP. BD. SURFACES TO RECEIVE 5/8" GYP. BD. (SMOOTH FINISH WITH NO TOOL MARKS.)
B. PROVIDE REQUIRED NEW AND REVISED DRAFT STOP PROTECTION ABOVE CEILING AS REQUIRED PER U.B.C. SECTION 2516 (f). CONSTRUCT WITH 1/2" GYP. BD. OVER 2X4 MIN. STUDS AT 16" O.C. PER SECTION 2516 (f).
C. CONVENTIONAL FRAMED CEILING: USE 2X6 D.F. #2 CEILING JOISTS AT 16" O.C. - MAY USE 2X4 D.F. #2 CEILING JOISTS AT 16" O.C. AT SOFFITS (MAX. SPAN - 8' - 0"). INTERIOR CEILING AT SOFFITS TO BE 5/8" GYP. BD. (SMOOTH FINISH WITH NOT TOOL MARKS). (ALTERNATE FRAMING: 25 GA. METAL STUDS.)
D. HARDWARE: PROVIDE PANIC HARDWARE AT DOORS REQUIRED BY BUILDING DEPARTMENT AND SELF CLOSERS AS DIRECTED BY OWNER. CONTRACTOR TO COORDINATE ALL KEYING LOCK FUNCTIONS, FINISHES, KICK-PLATES, ETC. WITH OWNER. SUBMIT CUT-SHEETS AND SCHEDULE TO OWNER FOR APPROVAL PRIOR TO ORDERING.
E. FIRE EXTINGUISHERS: PROVIDE AND INSTALL ANY NEW EXTINGUISHERS AS REQUIRED AND APPROVED BY AUTHORITIES AND OWNER.
F. THE ENTIRE BUILDING IS TO BE EQUIPPED WITH AN APPROVED AUTOMATIC FIRE EXTINGUISHING SPRINKLER SYSTEM PER CITY ORDINANCE

GENERAL NOTES

FIRE DEPARTMENT NOTES

1. CONTRACTOR TO VERIFY APPROVED WATER PRESSURE AND PROVIDE WATER PRESSURE REDUCING VALVE ON FIRE SPRINKLER RISER.
2. SUB-CONTRACTOR TO PROVIDE SHOP DRAWINGS FOR FIRE SPRINKLER REVIEW AND APPROVAL BY FIRE DEPARTMENT; AS WELL AS, APPROVAL OF FIRE ALARM SYSTEM.
3. EMERGENCY LIGHTING WILL BE REQUIRED PRIOR TO OCCUPANCY.

FIRE DEPARTMEN NOTES

1. SCOPE DOCUMENTS:THESE DRAWINGS INDICATE THE GENERAL SCOPE OF THE PROJECT IN TERMS OF ARCHITECTURAL DESIGN CONCEPT, THE DIMENSIONS OF THE BUILDING, THE MAJOR ARCHITECTURAL ELEMENTS AND THE TYPE OF STRUCTURAL, MECHANICAL, ELECTRICAL SYSTEMS. ON THE BASIS OF THE GENERAL SCOPE INDICATED OF DESCRIBED, THE CONTRACTOR SHALL FURNISH ALL ITEMS REQUIRED FOR THE PROPER EXECUTION AND COMPLETION OF THE WORK. DECISIONS OF THE ARCHITECT AS TO THE ITEMS OF WORK INCLUDED WITHIN THE SCOPE OF THESE DOCUMENTS SHALL BE FINAL AND BINDING ON THE CONTRACTOR AND THE OWNER.

2. ALL CONSTRUCTION AND MATERIALS SHALL BE AS SPECIFIED AND AS REQUIRED BY THE CURRENT EDITION OF THE UBC, LOCAL CODES AND AUTHORITIES. ALL NEW CONSTRUCTION SHALL COMPLY WITH TITLE 24, AND ADA. REQUIREMENTS.

3. THE CONTRACTOR SHALL BE RESPOSIBLE FOR THE ACCURATE PLACEMENT OF THE BUILDING ON THE SITE.

4. THE CONTRACTOR SHALL VERIFY ALL DIMENSIONS AND SITE CONDITIONS BEFORE STARTING WORK. SHOULD A DISCREPANCY APPEAR IN THE SPECIFICATIONS OR DRAWINGS, OR IN THE WORK DONE BY OTHERS FROM THE CONTRACT DOCUMENT THAT AFFECT ANY WORK, NOTIFY THE ARCHITECT AT ONCE FOR INSTRUCTION ON HOW TO PROCEED. IF THE CONTRACTOR PROCEEDS WITH THE WORK AFFECTED WITHOUT INSTRUCTIONS FROM THE ARCHITECT, THE CONTRACTOR SHALL MAKE GOOD ANY RESULTING DAMAGE OR DEFECT TO THE SATIFACTION OF THE ARCHITECT. SHOULD A CONFLICT OCCUR IN OR BETWEEN DRAWINGS AND SPECIFICATIONS, OF WHERE DETAIL REFERENCES ON CONTRACT DRAWINGS HAVE BEEN OMITTED, THE CONTRACTOR IS DEEMED TO HAVE ESTIMATED THE MOST EXPENSIVE MATERIALS AND CONSTRUCTION METHOD INVOLVED, UNLESS A WRITTEN DECISION FROM THE ARCHITECTS HAS BEEN OBTAINED WHICH DESCRIBES AN ALTERNATE METHOD AND/OR MATERIALS.

5. THE CONTRACTOR SHALL CONFINE HIS OPEARTIONS ON THE SITE TO AREAS PERMITTED BY THE OWNER. THE WORK SHALL BE DONE IN ACCORDANCE WITH APPLICABLE LAWS, LOCAL ORDINANCES, PERMITS AND THE CONTRACT DOCUMENTS. THE JOB SITE SHALL BE MAINTAINED IN A CLEAN, ORDERLY CONDITION FREE OF DEBRIS AND LITTER, AND SHALL NOT BE UNREASONABLY ENCUMBERED WITH ANY MATERIALS OR EQUIPMENT. EACH SUB-CONTRACTOR IMMEDIATELY UPON COMPLETION OF EACH PHASE OF HIS WORK SHALL REMOVE ALL TRASH AND DEBRIS AS RESULT OF HIS OPERATION.

6. ALL MATERIAL STORED ON THE SITE SHALL BE PROPERLY STACKED AND PROTECTED TO PREVENT DAMAGE AND DETERIORATION UNTIL USE. FAILURE TO PROTECT MATERIALS MAY BE CAUSE FOR REJECTION OF WORK.

7. THE CONTRACTOR SHALL DO ALL CUTTING, FITTING, OR PATCHING OF HIS WORK THAT MAY BE REQUIRED TO MAKE ITS SEVERAL PARTS FIT TOGETHER PROPERLY AND SHALL NOT ENDANGER ANY OTHER WORK BY CUTTING, EXCAVATING, OR OTHERWISE ALTERING THE TOTAL WORK OR ANY PART OF IT. ALL PATCHING, REPAIRING AND REPLACING OF MATERIALS AND SURFACED, CUT OR DAMAGED IN EXECUTION OF WORK, SHALL BE DONE WITH APPLICALE MATERIAL SO THAT SURFACES REPLACED WILL, UPON COMPLETION MATCH SURROUNDING SIMILAR SURFACES.

8. NO PORTION OF THE WORK REQUIRING A SHOP DRAWING OR SAMPLE SUBMISSION SHALL BE COMMENCED UNTIL THE SUBMISSION HAS BEEN APPROVED BY THE ARCHITECT. ALL SUCH PORTIONS OF THE WORK SHALL BE IN ACCORADANCE WITH APPROVED SHOP DRAWINGS AND SAMPLES.

9. DIMENSIONS:

A. ALL DIMENSIONS SHALL HAVE PREPERENCE OVER SCALE.

B. ALL DIMENSIONS ARE TO FACE OF FINISH UNLESS OTHERWISE NOTED.

C. CEILING HEIGHT DIMENSIONS ARE FROM FINISH FLOOR SLAB TO FINISH FACE OF CEILING.

10. ALL LEGEL EXIT DOORS SHALL BE OPENABLE FROM THE INSIED WITHOUT THE USE OF A KEY OR SPECIAL KNOWLEDGE OR EFFORT. EXIT SIGNS SHALL BE PROVIDED AT ALL EXITS AS REQUIRED BY CODE. ALL DOORS SWINGS SERVING AN OCCUPANT LOAD OF 50 OR GREATED SHALL SWING IN THE DIRECTION OF EXIT.

11. PROVIDE ALL NECESSARY BLOCKING, BACKNG AND FRAMING FOR LIGHT FIXTURE, ELECTRIC UNITS, A.C. EQUIPMENT AND ALL OTHER ITEMS REQURING.

12. WHERE LARGER STUDS OR FURRINGS ARE REQUIRED TO COVER DUCTS, PIPING AND CONDUITS, THE LARGER STUD SIZE OR FURRING SHALL EXTEND THE FULL SURFACE OF THE WALL WIDTH AND LENGTH WHERE THE FURRIING OCCURS.

13. LIVE LOAD SIGNS: PROVIDE ON METAL SIGN FOR EACH FLOOR PER THE REQUIREMENTS OF U.B.C. 2304(e). VERIFY LOCATION WITH ARCHITECT.

14. ALL EXTERIORS SHALL MEET THE REQUIREMENTS OF C.A.C., TITLE 8, and ELEVATOR SAFETTY ORDERS.

15. PROVIDE ILLUMINATED EXIT SIGNS PER THE REQUIREMENTS OF U.B.C., SECTION 3313.

16. PROVIDE FIRE EXTINGUISHERS PER THE REQUIREMENTS OF LOCAL GOVERNING AUTHORITIES.

17. THE STRUCTURAL, MECHANICAL AND ELECTRICAL DRAWINGS ARE SUPPLEMENTARY TO THE ARCHITECTURAL DRAWINGS. IT SHALL BE THE RESPONSIBILITY OF THE GENERAL CONTRACTOR TO CHECK WITH THE ARCHITECTURAL DRAWINGS BEFORE THE INSTALLATION OF STRUCTURAL, MECHANICA AND ELETRICAL WORK. ANY DISCREPANCY BETWEEN THE ARCHITECTURAL AND THE CONSULTING ENGINEER(S) DRAWINGS, SHALL BE BROUGHT TO THE ARCHITECT'S ATTENTION FOR CLARIFICATION. ANY WORK INSTALLED IN CONFLICT WITH THE ARCHITECTURAL DRAWINGS SHALL BE CORRECTED BY THE GENERAL CONTRACTOR AT HIS OWN EXPENSE, AND AT NO EXPESE TO THE OWER OR ARCHITECT.

18. THESE DOCUMENTS FOR CONSTRUCTION, ALTHOGH PREPARED WITH GREAT CARE AND APPROPRIATE DILIGENCE, MAY REPRESENT IMPERFECT INFORMATION AND MAY CONTAIN CODE VIOLATIONS, ERRORS, OMMISSIONS, CONTRADICTIONS AND IMPROER USES OF MATERIALS. CONTRACTOR SHALL REVIEW THIS DOCUMENT PACKAGE THOROUGHLY AND SHALL NOTIFY ARCHITECT IMMEDIALTELY UPON ANY SUCH DISCOVERY. ANY DEFICIENT ARCHITECTURAL/ENGINEERING SERVICES WILL BE PROMPTLY CORRECTED WHEN IDENTIFIED.

19. THE ENTIRE BUILDING IS TO BE EQUIPPED WITH AN APPROVED AUTOMATIC FIRE EXTINGUISHING SPRINKLER SYSTEM AND AUTOMATIC SMOKE DETECTORS INSTALLED WITHIN THE CORRIDORS IN ACCORDANCE WITH THEIR LISTING. THEACTUATION OF ANY DETECTOR SHALL ACTIVATE ALARMS AUDIBLE IN ALL AREAS SERVED BY THE CORRIDOR.

APPROVED
CITY OF RIVERSIDE
BUILDING & SAFETY
THIS APPROVAL DOES NOT AUTHORIZE VIOLATION OF ANY PROVISIONS OF STATE OR LOCAL BUILDING REGULATIONS NOR DOES IT PREVENT REQUIRING CORRECTIONS OF ANY ERROR SUBSEQUENTLY IDENTIFIED ON THESE PLANS OR CONSTRUCTED DUE TO ERRORS IN THESE PLANS.
Permit: 00-0921
Date:
By: J. Burnett/B. Kovjahch

CONSTRUCTION NOTES

KEY MAP
NO SCALE

BUILDING (OFFICE)

CODE	1997 UBC
OCCUPANCY GROUP	B
CONSTRUCTION TYPE	V - ONE HOUR (FULLY SPRINKLED)
BASIC ALLOWABLE TYPE	10,500 SQ.FT.
YARD INCREASE	N/A
SPRINKLER AREA INCREASE	21,000 SQ. FT.
TOTAL ALLOWABLE AREA	31,500 SQ. FT.
MAX. HEIGHT/ NO. OF STORIES	2
ACTUAL BUILDING AREA	10,720 SQ. FT.

BUILDING (MAINTENANCE/STORAGE)

CODE	1997 UBC
OCCUPANCY GROUP	S-1
CONSTRUCTION TYPE	V-N (NOT SPRICKLED)
BASIC ALLOWABLE TYPE	8,000 SQ.FT./PER STORY
YARD INCREASE	N/A
SPRINKLER AREA INCREASE	N/A.
TOTAL ALLOWABLE AREA	8,000 SQ.FT.
MAX. HEIGHT/ NO. OF STORIES	2
BUILDING AREA:	
EXISTING:	369. SQ.FT.
ADDITION:	100. SQ.FT.
TOTAL BUILDING AREA	469. SQ.FT.

GAZEBO

CODE	1997 UBC
OCCUPANCY GROUP	N/A
CONSTRUCTION TYPE	VN (NOT SPRINKLED)
BASIC ALLOWABLE TYPE	8000 SQ.FT.
YARD INCREASE	N/A
SPRINKLER AREA INCREASE	0
TOTAL ALLOWABLE AREA	8,000 SQ. FT.
MAX. HEIGHT/ NO. OF STORIES	2
ACTUAL BUILDING AREA	615 SQ. FT.

GAZEBO IS NOT REQUIRED TO BE FIRE SPRINKLED PER CITY OF RIVERSIDE ORDINANCE NO. 6473 SECTION 1003.2.1.1 "ALL BUILDINGS" EXEPTION NO. 6

CODE ANALYSIS

2 / A-3	ELEVATION NUMBER / SHEET NUMBER	1 / A	COLUMN LINE
6 / A-7	SECTION NUMBER / SHEET NUMBER	J / A-8 (1, 2, 3, 4)	INTERIOR ELEVATION
8 / A-8	DETAIL NUMBER / SHEET NUMBER	6 / A-7	WALL SECTION
2	REVISION NUMBER	101	ROOM NUMBER
2	DOOR NUMBER	2	KEY NOTE
5	WINDOW NUMBER		MATCH LINE

SYMBOLS

ARCHITECTURAL

T-1 TITLE SHEET

A-1.0 SITE DEMOLITION
A-1.1 SITE PLAN
A-1.2 DEMOLITION PLAN
A-1.3 PAVING PLAN

A-2.1 FLOOR PLAN
A-2.2 HIGHER LEVEL FLOOR PLAN
A-2.3 ROOF PLAN
A-2.4 LOWER LEVEL REFLECTED CEILING PLAN
A-2.5 HIGHER LEVEL REFLECTED CEILING PLAN
A-2.6 ENLARGED FLOOR PLAN
A-2.7 ENLARGED FLOOR PLAN
A-2.8 ENLARGED FLOOR PLAN
A-2.9 ENLARGED FLOOR PLAN
A-2.10 GAZEBO FLOOR PLAN & ELEVATIONS
A-2.11 MAINTENANCE SHED

A-3.1 EXTERIOR ELEVATIONS
A-3.2 EXTERIOR ELEVATIONS

A-4.1 SECTIONS
A-4.2 SECTIONS
A-4.3 SECTIONS
A-4.4 ENLARGED SECTIONS
A-4.5 ENLARGED SECTIONS
A-4.6 GAZEBO SECTION & DETAILS

A-5.1 INTERIOR ELEVATIONS
A-5.2 INTERIOR ELEVATIONS
A-5.3 INTERIOR ELEVATIONS
A-5.4 INTERIOR ELEVATIONS

A-6.1 FINISHES SCHEDULE
A-6.2 DOOR & WINDOW SCHEDULE

A-7.1 DETAILS
A-7.2 DETAILS
A-7.3 DETAILS

STRUCTURAL

S0-1 GENERAL NOTES & DETAILS
S0-2 GENERAL NOTES & DETAILS
S0-3 DETAILS
S0-4 DETAILS
S-1 FOUNDATION PLAN
S-2 LOW ROOF FRAMING PLAN
S-3 HIGH ROOF FRAMING PLAN
S-4 WALL ELEVATIONS
S-5 WALL ELEVATIONS
S-6 GAZEBO & MAINTENANCE BLDG.

MECHANICAL

M-1 HVAC EQUIPMENT SCHEDULES & NOTES
M-2 HVAC FLOOR PLANS
M-3 HVAC ROOF PLANS
M-4 CERTIFICATE OF COMPLIANCE

PLUMBING

P-1 PLUMBING SCHEDULES & NOTES
P-1.1 PLUMBING SITE PLAN
P-2 PLUMBING PLAN
P-3 PLUMBING ROOF PLAN
P-4 PLUMBING PARTIAL ENLARGED FLOOR PLANS
P-5 PLUMBING DETAILS

ELECTRICAL

E-1 SYMBOL LIST/FIXTURE SCHED./TITLE 24
E-2 SINGLE LINE DIAGRAM
E-3 ELECTRICAL SITE PLAN
E-4 LIGHTING PLAN
E-5 POWER PLAN
E-6 SIGNAL PLAN
E-7 ROOF ELECTRICAL PLAN

FOR REFERENCE ONLY

G-1 GRADING PLAN
G-2 GRADING PLAN

C-1 CONSTRUCTION PLAN
C-2 CONSTRUCTION PLAN
CD-1 CONSTRUCTION DETAILS

SHEET INDEX

VICINITY MAP
NTS.

KROH/BROESKE
ARCHITECTS
6180 BROCKTON AVE.
RIVERSIDE, CA 92506
TEL 909 788-5940
FAX 909 275-0149

Park and Recreation Offices, White Park
3936 CHESTNUT ST.
RIVERSIDE, CALIFORNIA

CONSULTANTS •

NO.	DATE	REVISION
1	5-5-00	PLAN CHECK

LICENSED ARCHITECT
JAMES L. BROESKE
No. C009174
Ren 11-30-01
STATE OF CALIFORNIA

THIS DRAWING AND THE DESIGNS, ARRANGEMENTS, DEPICTIONS, IDEAS AND OTHER INFORMATION CONTAINED HEREIN CONSTITUTE UNPUBLISHED WORK OF KROH/BROESKE ARCHITECTS AND SHALL REMAIN PROPERTY OF KROH/BROESKE ARCHITECTS IN PERPETUITY. NO PART THEREOF SHALL BE REPRODUCED, COPIED, DISCLOSED, DISTRIBUTED,SOLD, PUBLISHED OR OTHERWISE USED IN ANYWAY WITHOUT THE ADVANCE EXPRESS WRITTEN CONSENT OF KROH/BROESKE ARCHITECTS. VISUAL CONTACT WITH THE ABOVE DRAWINGS, OR ANY PART THEREOF, SHALL CONSTITUTE CONCLUSIVE EVIDENCE OF ACCEPTANCE OF THESE RESTRICTIONS.

SHEET TITLE •

COVER SHEET

CITY OF RIVERSIDE
SET 1 OF 2   SUBMITTAL DATE: Aug 10, 2000
ADDRESS....:3936 CHESTNUT ST
LOCATION...:
PC #: 00-0921
APPLICANT..: EMERY ANDY - PARK & REC DEPT
PHONE #....: 909 715-3470
DESCRIPTION: OFFICE (10,720 SQUARE FEET); STORAGE SHED (100 SQUARE FEET) & GAZEBO (615 SQUARE FEET)
PLAN CHECK BIN #: 3-I
SUBMITTAL..: 1ST 2ND 3RD 4TH

Thu Jun 01 08:57:58 2000

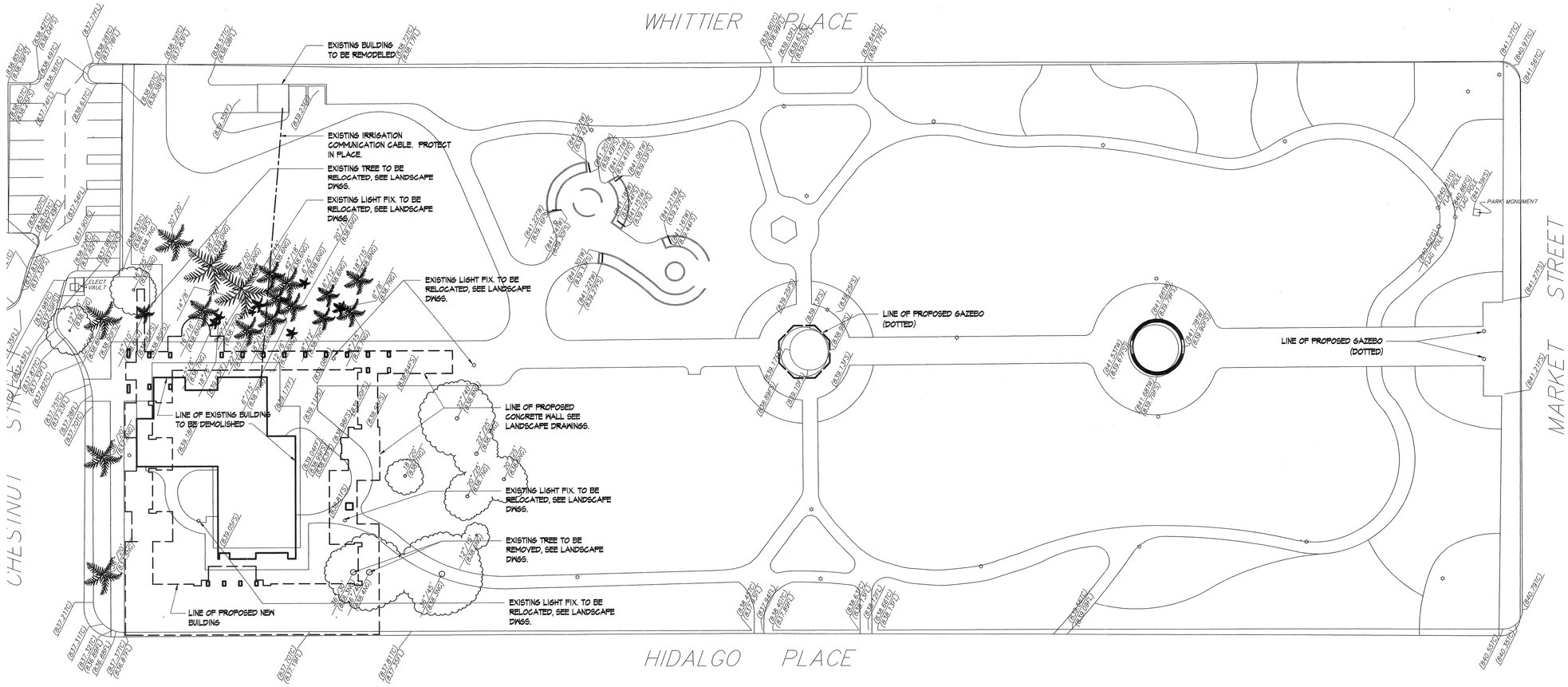

SITE DEMOLITION PLAN

1"=30'-0"

KEYNOTES

1. Existing cmu/wood framing building to be demolished. See specs. Field verify all existing conditions & coordinate with plumbing, electrical & mechanical drawings prior to demolition.

KROH/BROESKE
ARCHITECTS

6180 BROCKTON AVE.

RIVERSIDE, CA 92506

TEL 909 788-5940

FAX 909 275-0149

Park and Recreation Offices, White Park

3936 CHESTNUT ST.
RIVERSIDE, CALIFORNIA

CONSULTANTS •

NO.	DATE	REVISION
1	5-5-00	PLAN CHECK

LICENSED ARCHITECT JAMES V. BROESKE No. C009174 Ren 1-30-01 STATE OF CALIFORNIA

THIS DRAWING AND THE DESIGNS, ARRANGEMENTS, DEPICTIONS, IDEAS AND OTHER INFORMATION CONTAINED HEREIN CONSTITUTE UNPUBLISHED WORK OF KROH/BROESKE ARCHITECTS AND SHALL REMAIN PROPERTY OF KROH/BROESKE ARCHITECTS IN PERPETUITY. NO PART THEREOF SHALL BE REPRODUCED, COPIED, DISCLOSED, DISTRIBUTED,SOLD, PUBLISHED OR OTHERWISE USED IN ANYWAY WITHOUT THE ADVANCE EXPRESS WRITTEN CONSENT OF KROH/BROESKE ARCHITECTS. VISUAL CONTACT WITH THE ABOVE DRAWINGS, OR ANY PART THEREOF, SHALL CONSTITUTE CONCLUSIVE EVIDENCE OF ACCEPTANCE OF THESE RESTRICTIONS.

SHEET TITLE •

SITE DEMOLITON PLAN

DRAWN	•	R. M.
CHECKED	•	J. BROESKE
SCALE	•	1"=30'-0"
DATE	•	02-28-00
JOB	•	99008
SHEET	•	

A-1.0

WHITTIER PLACE

FAIRMOUNT BLVD.

A-2.11
ADD ALT. #1
SEE SPECS.

EXISTING MAINTENANCE SHED TO BE REMODEL

EXISTING PARKING AREA, 18 STALLS (4 H.C.)

H.C.
H.C.
H.C.
H.C.

A-2.1

ACCESSIBLE PATH OF TRAVEL, 5% MAX. SLOPE W/ 2% MAX. CROSS SLOPE.

TRANSFORMER

EXISTING PARK AND REMODEL WORK; SEE LANDSCAPE PLANS

A-2.10 GAZEBO PLAN
ADD ALT. #2
SEE SPECS.

EXISTING COMMUNITY CENTER BUILDING TO BE DEMOLISHED (DOTTED) SEE DEMOLITION PLAN ON SHEET A-1.2

PROPOSED NEW BUILDING. SEE SHEET A-2.1

67'-0"±

22'-4" ±

PAVING AND CONCRETE WALL SEE SHEET A-1.3

PROPOSED NEW GAZEBO. ALIGN CENTER OF GAZEBO WITH CENTER LINE OF INTERSECTION OF PATHS

WHITE PARK

CHESTNUT STREET

15'-0" SETBACK

21'-0" SETBACK

MARKET STREET

23'-0"±

HIDALGO PLACE

SITE PLAN

1"=30'-0"

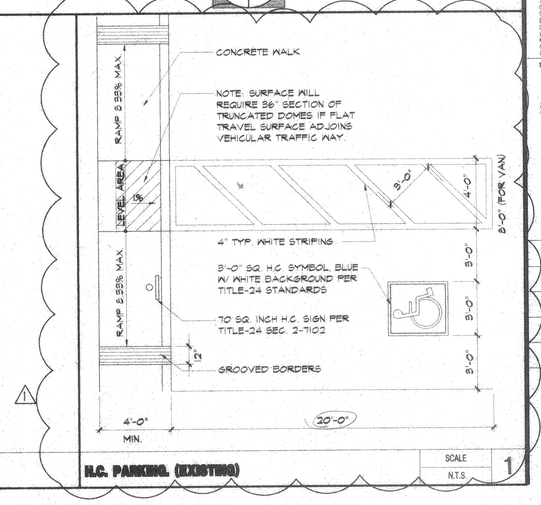

H.C. PARKING. (EXISTING)

SCALE N.T.S.

1

KROH/BROESKE
ARCHITECTS

6180 BROCKTON AVE.
RIVERSIDE, CA 92506
TEL 909.788-5940
FAX 909.275-0149

Park and Recreation Offices, White Park

3936 CHESTNUT ST.
RIVERSIDE, CALIFORNIA

CONSULTANTS: •

NO.	DATE	REVISION
1	5-5-00	PLAN CHECK

LICENSED ARCHITECT
JAMES L. BROESKE
No. C009174
Ren. 11-30-01
STATE OF CALIFORNIA

THIS DRAWING AND THE DESIGNS, ARRANGEMENTS, DEPICTIONS, IDEAS AND OTHER INFORMATION CONTAINED HEREIN CONSTITUTE UNPUBLISHED WORK OF KROH/BROESKE ARCHITECTS. SUCH WORK REMAIN PROPERTY OF KROH/BROESKE ARCHITECTS IN PERPETUITY. NO PART THEREOF SHALL BE REPRODUCED, ABORTED, DISCLOSED, DISTRIBUTED, SOLD, PUBLISHED OR OTHERWISE USED IN ANY WAY WITHOUT THE ADVANCE EXPRESS WRITTEN CONSENT OF KROH/BROESKE ARCHITECTS. VISUAL CONTACT WITH THE ABOVE DRAWINGS, OR ANY PART THEREOF, SHALL CONSTITUTE CONCLUSIVE EVIDENCE OF ACCEPTANCE OF THESE RESTRICTIONS.

SHEET TITLE •

SITE PLAN

DRAWN	•	R.M.
CHECKED	•	J. BROESKE
SCALE	•	1"=30'-0"
DATE	•	02-28-00
JOB	•	99008
SHEET	•	

A-1.1

Wed Jun 28 11:57:05 2000

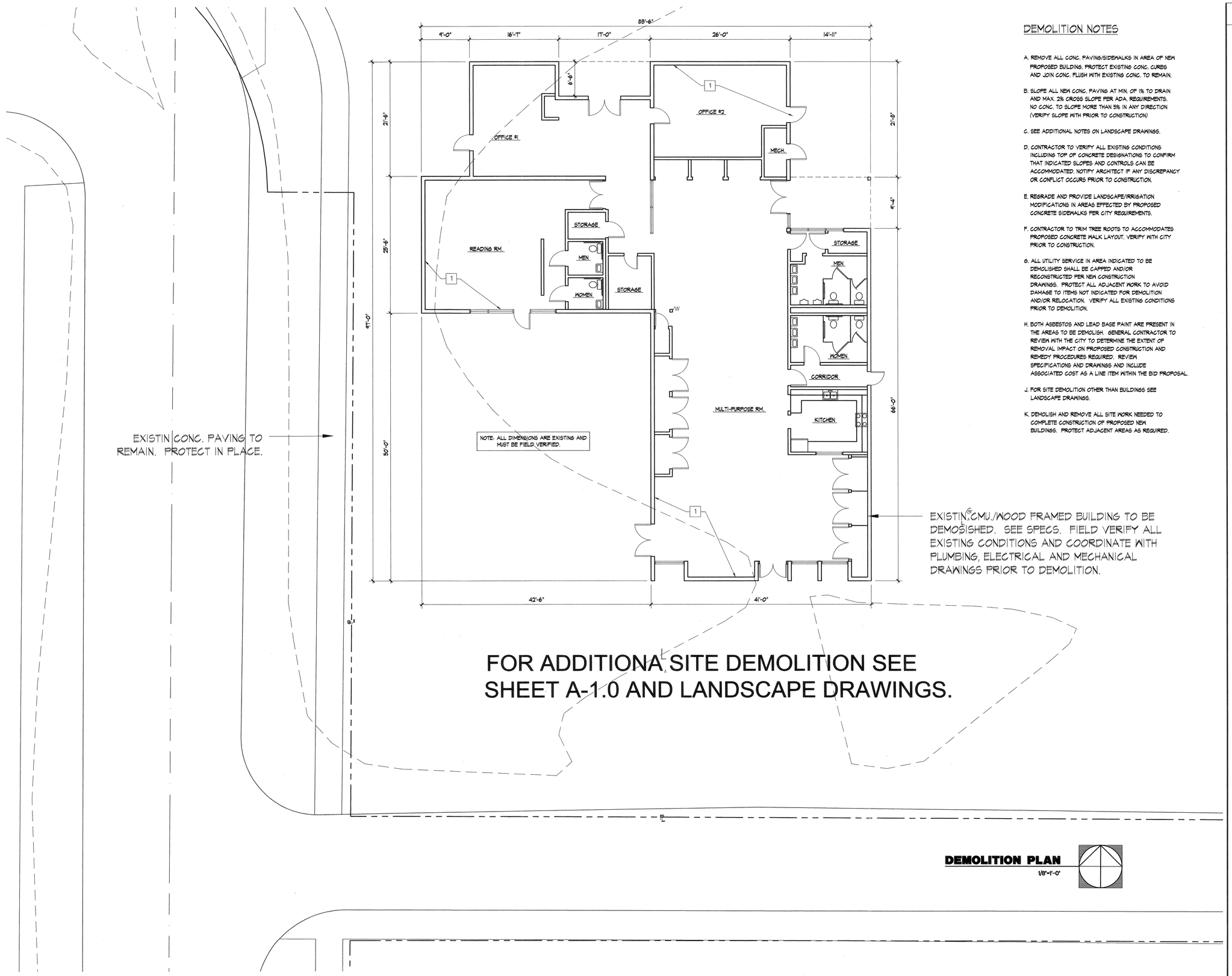

DEMOLITION NOTES

A. REMOVE ALL CONC. PAVING/SIDEWALKS IN AREA OF NEW PROPOSED BUILDING. PROTECT EXISTING CONC. CURBS AND JOIN CONC. FLUSH WITH EXISTING CONC. TO REMAIN.

B. SLOPE ALL NEW CONC. PAVING AT MIN. OF 1% TO DRAIN AND MAX. 2% CROSS SLOPE PER ADA. REQUIREMENTS. NO CONC. TO SLOPE MORE THAN 5% IN ANY DIRECTION (VERIFY SLOPE WITH PRIOR TO CONSTRUCTION)

C. SEE ADDITIONAL NOTES ON LANDSCAPE DRAWINGS.

D. CONTRACTOR TO VERIFY ALL EXISTING CONDITIONS INCLUDING TOP OF CONCRETE DESIGNATIONS TO CONFIRM THAT INDICATED SLOPES AND CONTROLS CAN BE ACCOMMODATED. NOTIFY ARCHITECT IF ANY DISCREPANCY OR CONFLICT OCCURS PRIOR TO CONSTRUCTION.

E. REGRADE AND PROVIDE LANDSCAPE/IRRIGATION MODIFICATIONS IN AREAS EFFECTED BY PROPOSED CONCRETE SIDEWALKS PER CITY REQUIREMENTS.

F. CONTRACTOR TO TRIM TREE ROOTS TO ACCOMMODATES PROPOSED CONCRETE WALK LAYOUT. VERIFY WITH CITY PRIOR TO CONSTRUCTION.

G. ALL UTILITY SERVICE IN AREA INDICATED TO BE DEMOLISHED SHALL BE CAPPED AND/OR RECONSTRUCTED PER NEW CONSTRUCTION DRAWINGS. PROTECT ALL ADJACENT WORK TO AVOID DAMAGE TO ITEMS NOT INDICATED FOR DEMOLITION AND/OR RELOCATION. VERIFY ALL EXISTING CONDITIONS PRIOR TO DEMOLITION.

H. BOTH ASBESTOS AND LEAD BASE PAINT ARE PRESENT IN THE AREAS TO BE DEMOLISH. GENERAL CONTRACTOR TO REVIEW WITH THE CITY TO DETERMINE THE EXTENT OF REMOVAL IMPACT ON PROPOSED CONSTRUCTION AND REMEDY PROCEDURES REQUIRED. REVIEW SPECIFICATIONS AND DRAWINGS AND INCLUDE ASSOCIATED COST AS A LINE ITEM WITHIN THE BID PROPOSAL.

J. FOR SITE DEMOLITION OTHER THAN BUILDINGS SEE LANDSCAPE DRAWINGS.

K. DEMOLISH AND REMOVE ALL SITE WORK NEEDED TO COMPLETE CONSTRUCTION OF PROPOSED NEW BUILDINGS. PROTECT ADJACENT AREAS AS REQUIRED.

DEMOLITION PLAN
1/8"=1'-0"

DEMOLITION NOTES

KROH/BROESKE
ARCHITECTS
6180 BROCKTON AVE.
RIVERSIDE, CA 92506
TEL 909 788-5940
FAX 909 275-0149

Park and Recreation Offices, White Park
3936 CHESTNUT ST.
RIVERSIDE, CALIFORNIA

CONSULTANTS •

NO.	DATE	REVISION
1	5-5-00	PLAN CHECK

LICENSED ARCHITECT
JAMES L. BROESKE
No. C009174
Ren 11-30-01
STATE OF CALIFORNIA

THIS DRAWING AND THE DESIGNS, ARRANGEMENTS, DEPICTIONS, IDEAS AND OTHER INFORMATION CONTAINED HEREIN CONSTITUTE UNPUBLISHED WORK OF KROH/BROESKE ARCHITECTS AND SHALL REMAIN PROPERTY OF KROH/BROESKE ARCHITECTS IN PERPETUITY. NO PART THEREOF SHALL BE REPRODUCED, COPIED, DISCLOSED, DISTRIBUTED/SOLD, PUBLISHED OR OTHERWISE USED IN ANYWAY WITHOUT THE ADVANCE EXPRESS WRITTEN CONSENT OF KROH/BROESKE ARCHITECTS. VISUAL CONTACT WITH THE ABOVE DRAWINGS, OR ANY PART THEREOF, SHALL CONSTITUTE CONCLUSIVE EVIDENCE OF ACCEPTANCE OF THESE RESTRICTIONS.

SHEET TITLE •

DEMOLITION PLAN

DRAWN	•	R.M. / M.P.
CHECKED	•	J. BROESKE
SCALE	•	1/8"=1'-0"
DATE	•	02-28-00
JOB	•	99008
SHEET	•	

A-1.2

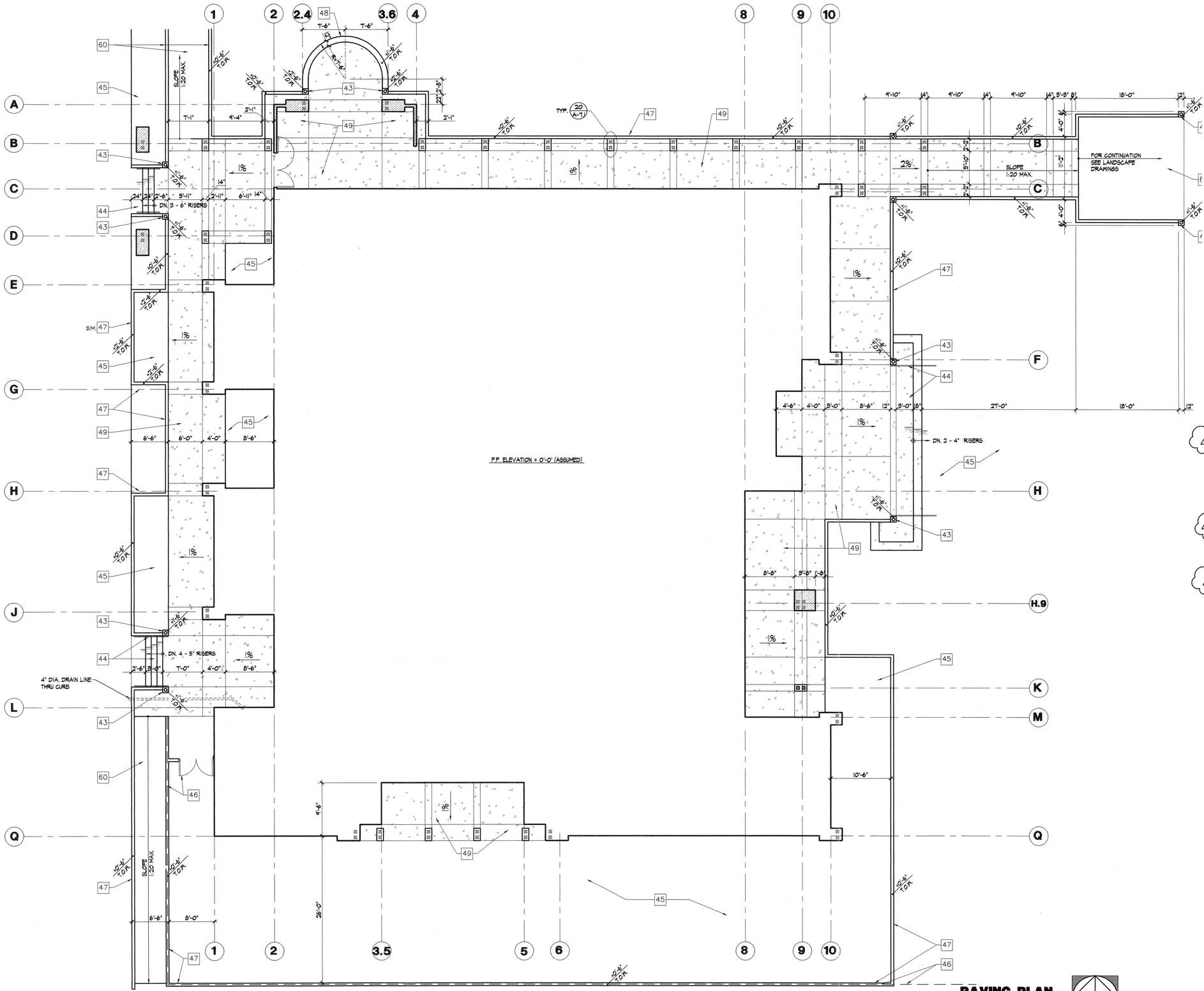

PAVING PLAN

1/8"=1'-0"

KEYNOTES

1. Asphalt shingle roofing.
2. Board siding (stain finish)
3. Built-up wood header trim boards (stain finish) see detail 10/A-7.1
4. Flexi-rock plaster system
5. Windows (see schedule)
6. Cast aluminum signage/lettering (see specifications for text)
7. 6x10 outlooker beams w/ 4x4 kicker supports at dormer roofs (stain finish) see detail 14/A-7.1
8. 6x outlooker beams (stain finish)
9. Double 6x6 post(s) light sandblast/stain finish
10. 2x6 corner trim boards (medium sandblast w/ stain finish) see detail 15/A-7.1
11. Built-up roofing
12. Roof access ladder and door see detail 10/A-7.2
13. Built-up cricket, see detail 2/A-7.1
14. Drinking fountain (high/low)
15. Furniture systems panels by others (N.I.C.)
16. Laminated plastic cabinetry/ counter see interior elevations
17. Laminated plastic storage cabinets/shelves, see interior elevations
18. T-bar suspended ceiling system, by Armstrong, "bold look" white w/ 15/16 prelude, see detail 2/A-7.2
19. 5/8" gyp. board (paint finish)
20. 4" thick concrete slab with vapor barrier per soils report.
21. Double 4X10 beams (light sandblast and stain finish) See detail 11/A-7.2
22. Edge of roof
23. 1x6 T. & G. sheathing (light sandblast and stain finish)
24. Exposed framing w/ 1x6 T. & G. roof sheathing (light sandblast and stain finish)
25. Mailboxy Boards
26. Built-up gutter/trellis, and sign #2 and sign #3 location, see detail 17/A-7.1
27. Furniture/equipment (N.I.C.)
28. Aluminum pass-thru sliding window (see interior elevations)
29. 4" dia. G.I. down spout in wall and underground to outlet per plan
30. Roof drain and overflow, see detail 3/A-7.2
31. Built-up soffit band, see detail 5/A-4.5
32. Built-up soffit/light valance, see detail 4/A-4.4
33. Dormer framing (see roof plan and structural drawings)
34. Pre-engineered truss, see structural drawings
35. Toilet compartment partitions.
36. H.C. grab bars per T-24
37. Exposed, shaped rafter tails w/ light sandblast and stain finish
38. Mop sink w/ mop rack above.
39. 1 1/4" dia. G.I. handrail, see detail 8/A-7.1
40. 4'-0" high FRP. wainscot.
41. Draft stop per UBC.
42. Light fixture
43. Light bollard fixture, see electrical plans for fixture. See detail 14/A-7.2
44. Concrete stair w/ visual striping and handrail, see detail 8/A-7.1
45. Planting area, see landscape/irrigation drawings.
46. Gate and fence, see landscape drawings.
47. 6" thick concrete curb/wall w/ sack finish typical at all exposed faces, see paving plan, sheet A-1.3 for heights (T.O.W.=6" above F.F. unless noted otherwise) see detail 13/A-7.2
48. 12" thick concrete wall, see detail 13/A-7.2 sim. (T.O.W.=+18" above fin. floor elevation)
49. 4" thick concrete slab with rock-salt finish w/ control joints @ 10'-0" o.c. and construction joints @ 20'-0" o.c. max.
50. Double 4x4 S.4.S. trellis members (stain finish) see detail 7/A-7.3
51. R-30 Batt. Insulation at roof joists/trusses
52. Built-up rake fascia: 2x4 trim over 2x6 joist (stain finish)
53. 6x beam (light sandblast and stain finish)
54. Pre-fabricated/pre-engineered steel gazebo structure. Manufacturer to provide shop drawings to building department for approval
55. 5/8" plywood sheathing (paint finish)
56. 1/4" reveal/control joint, see elevations for locations, see detail 7/A-7.1
57. Fiber reinforced paneling over gyp. board.
58. 2" G.I. soffit vent (paint finish)
59. "Tapered Finial" 6" and 4" globes, 40" tall by Fisher Artworks
60. Conc. slab and/or wall see landscape drawings.

LEGEND

- 8" sound wall, see detail 12/A-7.2
- 2x6 studs @ 16" o.c. w/ full thickness batt. insulation
- Top of wall elevation designation (ht. indicated is taken from F.F. level)

KROH/BROESKE
ARCHITECTS
6180 BROCKTON AVE.
RIVERSIDE, CA 92506
TEL 909 788-5940
FAX 909 275-0149

Park and Recreation Offices, White Park

3936 CHESTNUT ST.
RIVERSIDE, CALIFORNIA

CONSULTANTS •

NO.	DATE	REVISION
1	5-5-00	PLAN CHECK

LICENSED ARCHITECT JAMES L. BROESKE No. C009174 Ren 11-30-01 STATE OF CALIFORNIA

THIS DRAWING AND THE DESIGNS, ARRANGEMENTS, DEPICTIONS, IDEAS AND OTHER INFORMATION CONTAINED HEREIN CONSTITUTE UNPUBLISHED WORK OF KROH/BROESKE ARCHITECTS AND SHALL REMAIN PROPERTY OF KROH/BROESKE ARCHITECTS IN PERPETUITY. NO PART THEREOF SHALL BE REPRODUCED, COPIED, DISCLOSED, DISTRIBUTED,SOLD, PUBLISHED OR OTHERWISE USED IN ANYWAY WITHOUT THE ADVANCE EXPRESS WRITTEN CONSENT OF KROH/BROESKE ARCHITECTS. VISUAL CONTACT WITH THE ABOVE DRAWINGS, OR ANY PART THEREOF, SHALL CONSTITUTE CONCLUSIVE EVIDENCE OF ACCEPTANCE OF THESE RESTRICTIONS.

SHEET TITLE •

PAVING PLAN

DRAWN	•	M. PRICE
CHECKED	•	J. BROESKE
SCALE	•	1/8"=1'-0"
DATE	•	02-28-00
JOB	•	99008
SHEET	•	

A-1.3

FLOOR PLAN
1/8"=1'-0"

KEYNOTES

1. Asphalt shingle roofing.
2. Board siding (stain finish)
3. Built-up wood header trim boards (stain finish) see detail 10/A-7.1
4. Flexi-rock plaster system
5. Windows (see schedule)
6. Cast aluminum signage/lettering (see specifications for text)
7. 6x10 outlooker beams w/ 4x4 kicker supports at dormer roofs (stain finish) see detail 14/A-7.1
8. 6x outlooker beams (stain finish)
9. Double 6x6 post(s) light sandblast/stain finish
10. 2x6 corner trim boards (medium sandblast w/ stain finish) see detail 15/A-7.1
11. Built-up roofing
12. Roof access ladder and door see detail 10/A-7.2
13. Built-up cricket, see detail 2/A-7.1
14. Drinking fountain (high/low)
15. Furniture systems panels by others (N.I.C.)
16. Laminated plastic cabinetry/ counter see interior elevations
17. Laminated plastic storage cabinets/shelves, see interior elevations
18. T-bar suspended ceiling system, by Armstrong, "bold look" white w/ 15/16 prelude, see detail 2/A-7.2
19. 5/8" gyp. board (paint finish)
20. 4" thick concrete slab with vapor barrier per soils report.
21. Double 4X10 beams (light sandblast and stain finish) See detail 11/A-7.2
22. Edge of roof
23. 1x6 T. & G. sheathing (light sandblast and stain finish)
24. Exposed framing w/ 1x6 T. & G. roof sheathing (light sandblast and stain finish)
25. Walkway Boards
26. Built-up gutter/trellis, and sign #2 and sign #3 location, see detail 17/A-7.1
27. Furniture/equipment (N.I.C.)
28. Aluminum pass-thru sliding window (see interior elevations)
29. 4" dia. G.I. down spout in wall and underground to outlet per plan
30. Roof drain and overflow, see detail 3/A-7.2
31. Built-up soffit band, see detail 5/A-4.5
32. Built-up soffit/light valance, see detail 4/A-4.4
33. Dormer framing (see roof plan and structural drawings)
34. Pre-engineered truss, see structural drawings
35. Toilet compartment partitions.
36. H.C. grab bars per T-24
37. Exposed, shaped rafter tails w/ light sandblast and stain finish
38. Mop sink w/ mop rack above.
39. 1 1/4" dia. G.I. handrail, see detail 8/A-7.1
40. 4'-0" high FRP. wainscot.
41. Draft stop per UBC.
42. Light fixture
43. Light ballard fixture, see electrical plans for fixture. See detail 14/A-7.2
44. Concrete stair w/ visual striping and handrail, see detail 8/A-7.1
45. Planting area, see landscape/irrigation drawings.
46. Gate and fence, see landscape drawings.
47. 6" thick concrete curb/wall w/ sack finish typical at all exposed faces, see paving plan, sheet A-1.3 for heights (T.O.W.=6" above F.F. unless noted otherwise) see detail 13/A-7.2
48. 12" thick concrete wall, see detail 13/A-7.2 sim. (T.O.W.=+18" above fin. floor elevation)
49. 4" thick concrete slab with rock-salt finish w/ control joints @ 10'-0" o.c. and construction joints @ 20'-0" o.c. max.
50. Double 4x4 S.4.S. trellis members (stain finish) see detail 7/A-7.3
51. R-30 Batt. insulation at roof joists/trusses
52. Built-up rake fascia: 2x4 trim over 2x6 joist (stain finish)
53. 6x beam (light sandblast and stain finish)
54. Pre-fabricated/pre-engineered steel gazebo structure. Manufacturer to provide shop drawings to building department for approval
55. 5/8" plywood sheathing (paint finish)
56. 1/4" reveal/control joint, see elevations for locations, see detail 7/A-7.1
57. Fiber reinforced paneling over gyp. board.
58. 2" G.I. soffit vent (paint finish)
59. "Tapered Finial" 6" and 4" globes, 40" tall by Fisher Artworks
60. Conc. slab and/or wall see landscape drawings.

LEGEND

8" sound wall, see detail 12/A-7.2

2x6 studs @ 16" o.c. w/ full thickness batt. insulation

+0'-6" T.O.W. — Top of wall elevation designation (ht. indicated is taken from F.F. level)

KROH/BROESKE
ARCHITECTS

6180 BROCKTON AVE.
RIVERSIDE, CA 92506
TEL 909 788-5940
FAX 909 275-0149

Park and Recreation Offices, White Park
3936 CHESTNUT ST.
RIVERSIDE, CALIFORNIA

CONSULTANTS •

NO.	DATE	REVISION
1	5-5-00	PLAN CHECK

LICENSED ARCHITECT JAMES L. BROESKE C009174 Ren 11.30.01 STATE OF CALIFORNIA

THIS DRAWING AND THE DESIGNS, ARRANGEMENTS, DEPICTIONS, IDEAS AND OTHER INFORMATION CONTAINED HEREIN CONSTITUTE UNPUBLISHED WORK OF KROH/BROESKE ARCHITECTS AND SHALL REMAIN PROPERTY OF KROH/BROESKE ARCHITECTS IN PERPETUITY. NO PART THEREOF SHALL BE REPRODUCED, COPIED, DISCLOSED, DISTRIBUTED,SOLD, PUBLISHED OR OTHERWISE USED IN ANYWAY WITHOUT THE ADVANCE EXPRESS WRITTEN CONSENT OF KROH/BROESKE ARCHITECTS. VISUAL CONTACT WITH THE ABOVE DRAWINGS, OR ANY PART THEREOF, SHALL CONSTITUTE CONCLUSIVE EVIDENCE OF ACCEPTANCE OF THESE RESTRICTIONS.

SHEET TITLE •

FLOOR PLAN

DRAWN	M. PRICE
CHECKED	J. BROESKE
SCALE	1/8"=1'-0"
DATE	02-28-00
JOB	99008
SHEET	

A-2.1

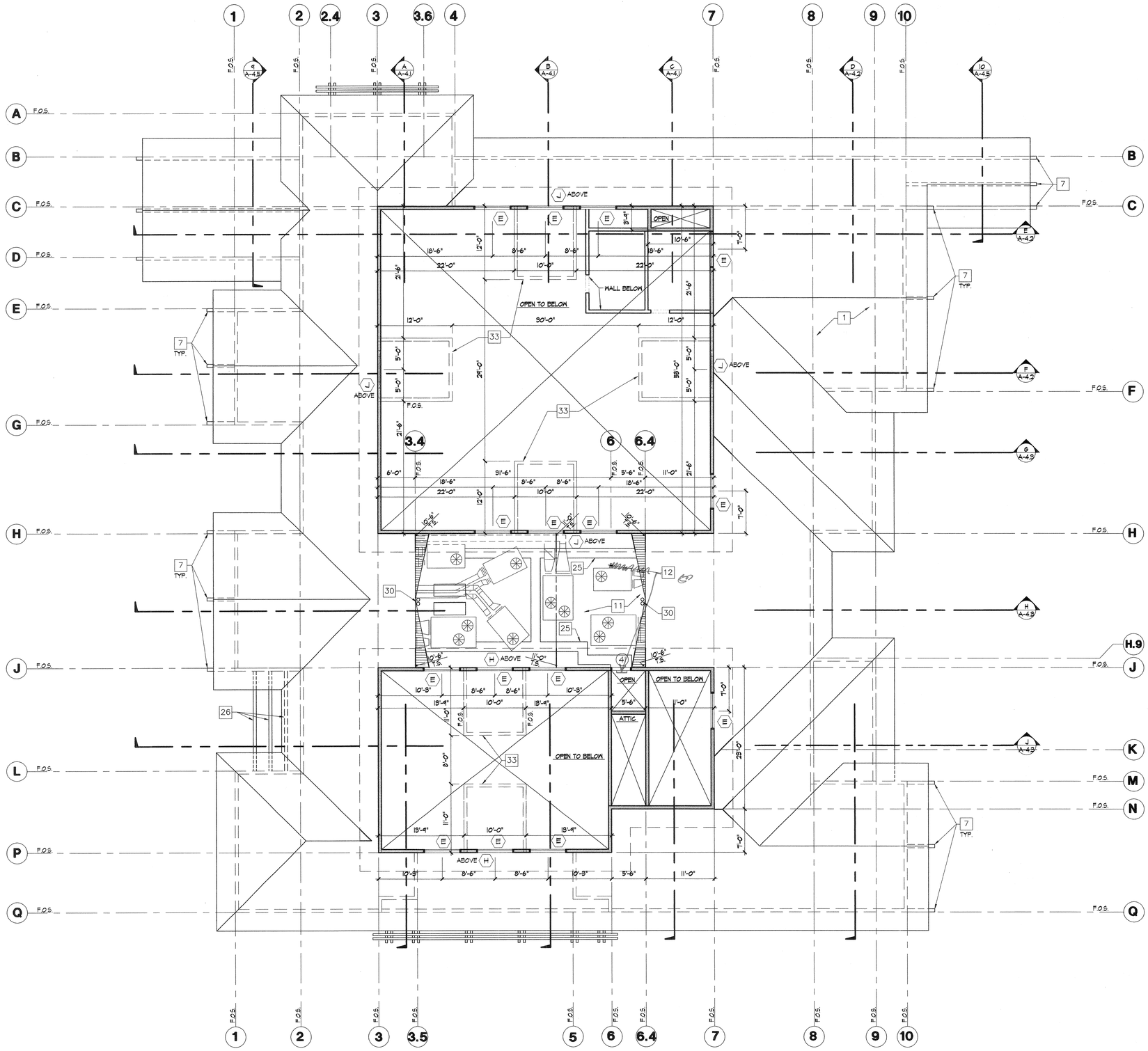

HIGH LEVEL FLOOR PLAN

1/8"-1'-0"

KEYNOTES

1. Asphalt shingle roofing.
2. Board siding (stain finish)
3. Built-up wood header trim boards (stain finish) see detail 10/A-7.1
4. Flexi-rock plaster system
5. Windows (see schedule)
6. Cast aluminum signage/lettering (see specifications for text)
7. 6x10 outlooker beams w/ 4x4 kicker supports at dormer roofs (stain finish) see detail 14/A-7.1
8. 6x outlooker beams (stain finish)
9. Double 6x6 post(s) light sandblast/stain finish
10. 2x6 corner trim boards (medium sandblast w/ stain finish) see detail 15/A-7.1
11. Built-up roofing
12. Roof access ladder and door see detail 18/A-7.2 9/A-7.2
13. Built-up cricket, see detail 2/A-7.1
14. Drinking fountain (high/low)
15. Furniture systems panels by others (N.I.C.)
16. Laminated plastic cabinetry/ counter see interior elevations
17. Laminated plastic storage cabinets/shelves, see interior elevations
18. T-bar suspended ceiling system, by Armstrong, "bold look" white w/ 15/16 prelude, see detail 2/A-7.2
19. 5/8" gyp. board (paint finish)
20. 4" thick concrete slab with vapor barrier per soils report.
21. Double 4X10 beams (light sandblast and stain finish) See detail 11/A-7.2
22. Edge of roof
23. 1x6 T. & G. sheathing (light sandblast and stain finish)
24. Exposed framing w/ 1x6 T. & G. roof sheathing (light sandblast and stain finish)
25. Walkway Boards
26. Built-up gutter/trellis, and sign #2 and sign #3 location, see detail 17/A-7.1
27. Furniture/equipment (N.I.C.)
28. Aluminum pass-thru sliding window (see interior elevations)
29. 4" dia. G.I. down spout in wall and underground to outlet per plan
30. Roof drain and overflow, see detail 3/A-7.2
31. Built-up soffit band, see detail 5/A-4.5
32. Built-up soffit/light valance, see detail 4/A-4.4
33. Dormer framing (see roof plan and structural drawings)
34. Pre-engineered truss, see structural drawings
35. Toilet compartment partitions.
36. H.C. grab bars per T-24
37. Exposed, shaped rafter tails w/ light sandblast and stain finish
38. Mop sink w/ mop rack above.
39. 1 1/4" dia. G.I. handrail, see detail 8/A-7.1
40. 4'-0" high FRP. wainscot.
41. Draft stop per UBC.
42. Light fixture
43. Light ballard fixture, see electrical plans for fixture. See detail 14/A-7.2
44. Concrete stair w/ visual striping and handrail, see detail 8/A-7.1
45. Planting area, see landscape/irrigation drawings.
46. Gate and fence, see landscape drawings.
47. 6" thick concrete curb/wall w/ sack finish typical at all exposed faces, see paving plan, sheet A-1.3 for heights (T.O.W.=6" above F.F. unless noted otherwise) see detail 13/A-7.2
48. 12" thick concrete wall, see detail 13/A-7.2 sim. (T.O.W.=+18" above fin. floor elevation)
49. 4" thick concrete slab with rock-salt finish w/ control joints @ 10'-0" o.c. and construction joints @ 20'-0" o.c. max.
50. Double 4x4 S.4.S. trellis members (stain finish) see detail 7/A-7.3
51. R-30 Batt. insulation at roof joists/trusses
52. Built-up rake fascia: 2x4 trim over 2x6 joist (stain finish)
53. 6x beam (light sandblast and stain finish)
54. Pre-fabricated/pre-engineered steel gazebo structure. Manufacturer to provide shop drawings to building department for approval
55. 5/8" plywood sheathing (paint finish)
56. 1/4" reveal/control joint, see elevations for locations, see detail 7/A-7.1
57. Fiber reinforced paneling over gyp. board.
58. 2" G.I. soffit vent (paint finish)
59. "Tapered Finial" 6" and 4" globes, 40" tall by Fisher Artworks
60. Conc. slab and/or wall see landscape drawings.

LEGEND

- 8" sound wall, see detail 12/A-7.2
- 2x6 studs @ 16" o.c. w/ full thickness batt. insulation
- T.O.W. +0'-6" — Top of wall elevation designation (ht. indicated is taken from F.F. level)

KROH/BROESKE
ARCHITECTS
6180 BROCKTON AVE.
RIVERSIDE, CA 92506
TEL 909 788-5940
FAX 909 275-0149

Park and Recreation Offices, White Park

3936 CHESTNUT ST.
RIVERSIDE, CALIFORNIA

CONSULTANTS •

NO.	DATE	REVISION
1	5-5-00	PLAN CHECK

LICENSED ARCHITECT JAMES L. BROESKE No. C009174 Ren 11-30-01 STATE OF CALIFORNIA

THIS DRAWING AND THE DESIGNS, IMPROVEMENTS, DEPICTIONS, IDEAS AND OTHER INFORMATION CONTAINED HEREIN CONSTITUTE UNPUBLISHED WORK OF KROH/BROESKE ARCHITECTS AND SHALL REMAIN PROPERTY OF KROH/BROESKE ARCHITECTS IN PERPETUITY. NO PART THEREOF SHALL BE REPRODUCED, COPIED, DISCLOSED, DISTRIBUTED,SOLD, PUBLISHED OR OTHERWISE USED IN ANYWAY WITHOUT THE ADVANCE EXPRESS WRITTEN CONSENT OF KROH/BROESKE ARCHITECTS. VISUAL CONTACT WITH THE ABOVE DRAWINGS, OR ANY PART THEREOF, SHALL CONSTITUTE CONCLUSIVE EVIDENCE OF ACCEPTANCE OF THESE RESTRICTIONS.

SHEET TITLE •

HIGH LEVEL FLOOR PLAN

DRAWN	•	M. PRICE
CHECKED	•	J. BROESKE
SCALE	•	1/8"-1'-0"
DATE	•	02-28-00
JOB	•	99008
SHEET	•	

A-2.2

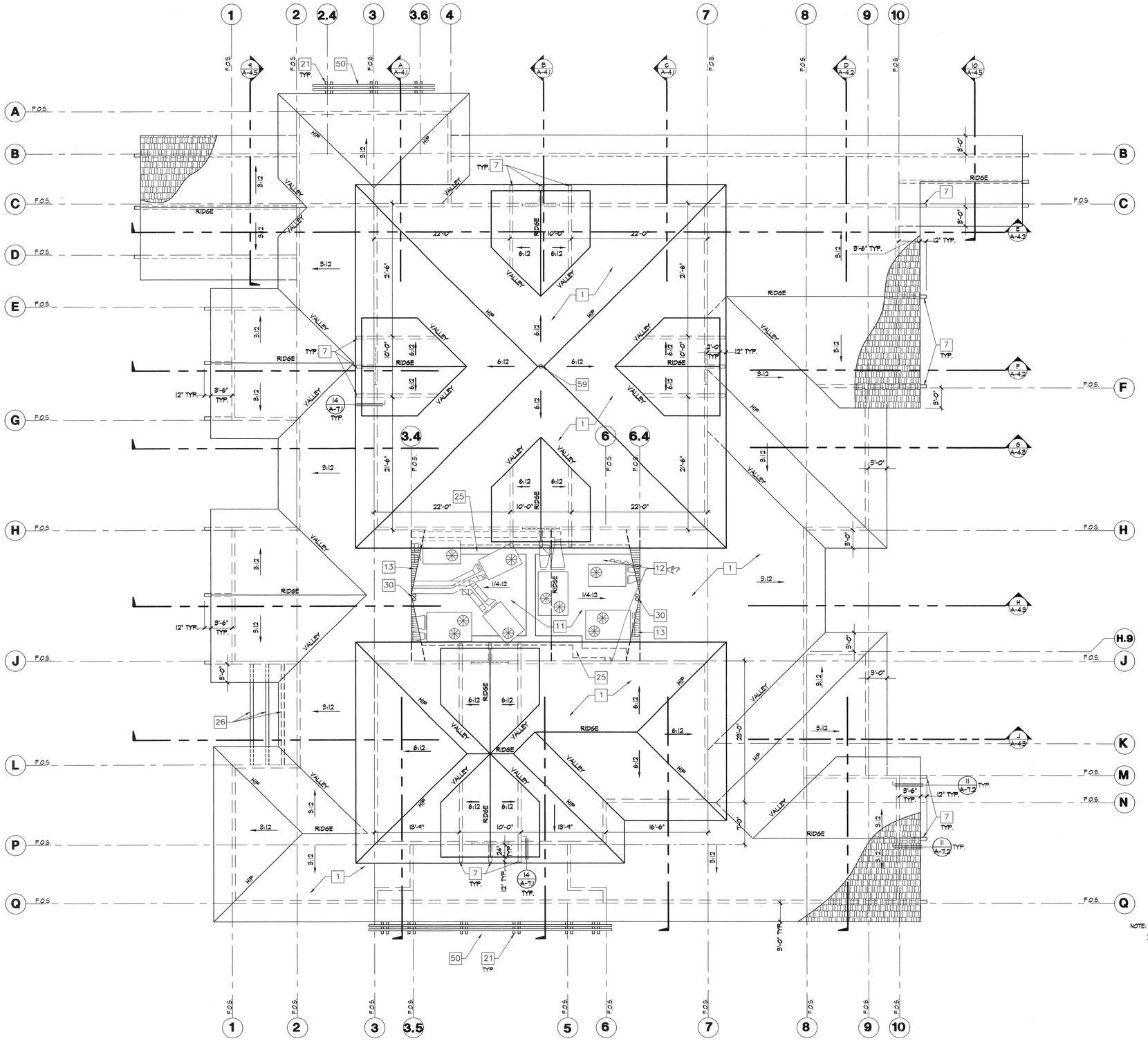

ROOF PLAN

1/8"=1'-0"

KEYNOTES

1. Asphalt shingle roofing.
2. Board siding (stain finish)
3. Built-up wood header trim boards (stain finish) see detail 10/A-7.1
4. Flexi-rock plaster system
5. Windows (see schedule)
6. Cast aluminum signage/lettering (see specifications for text)
7. 6x10 outlooker beams w/ 4x4 kicker supports at dormer roofs (stain finish) see detail 14/A-7.1
8. 6x outlooker beams (stain finish)
9. Double 6x6 post(s) light sandblast/stain finish
10. 2x6 corner trim boards (medium sandblast w/ stain finish) see detail 15/A-7.1
11. Built-up roofing
12. Roof access ladder and door see detail 19/A-7.2 9/A-7.2
13. Built-up cricket, see detail 2/A-7.1
14. Drinking fountain (high/low)
15. Furniture systems panels by others (N.I.C.)
16. Laminated plastic cabinetry/ counter see interior elevations
17. Laminated plastic storage cabinets/shelves, see interior elevations
18. T-bar suspended ceiling system, by Armstrong, "bold lock" white w/ 15/16 prelude, see detail 2/A-7.2
19. 5/8" gyp. board (paint finish)
20. 4" thick concrete slab with vapor barrier per soils report.
21. Double 4X10 beams (light sandblast and stain finish) See detail 11/A-7.2
22. Edge of roof
23. 1x6 T. & G. sheathing (light sandblast and stain finish)
24. Exposed framing w/ 1x6 T. & G. roof sheathing (light sandblast and stain finish)
25. Walkway Boards
26. Built-up gutter/trellis, and sign #2 and sign #3 location, see detail 17/A-7.1
27. Furniture/equipment (N.I.C.)
28. Aluminum pass-thru sliding window (see interior elevations)
29. 4" dia. G.I. down spout in wall and underground to outlet per plan
30. Roof drain and overflow, see detail 3/A-7.2
31. Built-up soffit band, see detail 5/A-4.5
32. Built-up soffit/light valance, see detail 4/A-4.4
33. Dormer framing (see roof plan and structural drawings)
34. Pre-engineered truss, see structural drawings
35. Toilet compartment partitions.
36. H.C. grab bars per T-24
37. Exposed, shaped rafter tails w/ light sandblast and stain finish
38. Mop sink w/ mop rack above.
39. 1 1/4" dia. G.I. handrail, see detail 8/A-7.1
40. 4'-0" high FRP. mainscot.
41. Draft stop per UBC.
42. Light fixture
43. Light bollard fixture, see electrical plans for fixture. See detail 14/A-7.2
44. Concrete stair w/ visual striping and handrail, see detail 8/A-7.1
45. Planting area, see landscape/irrigation drawings.
46. Gate and fence, see landscape drawings.
47. 6" thick concrete curb/wall w/ sack finish typical at all exposed faces, see paving plan, sheet A-1.3 for heights (T.O.W.=6" above F.F. unless noted otherwise) see detail 13/A-7.2
48. 12" thick concrete wall, see detail 13/A-7.2 sim. (T.O.W.=18" above fin. floor elevation)
49. 4" thick concrete slab with rock-salt finish w/ control joints @ 10'-0" o.c. and construction joints @ 20'-0" o.c. max.
50. Double 4x4 S.4.S. trellis members (stain finish) see detail 7/A-7.3
51. R-30 Batt. insulation at roof joists/trusses
52. Built-up rake fascia: 2x4 trim over 2x6 joist (stain finish)
53. 6x beam (light sandblast and stain finish)
54. Pre-fabricated/pre-engineered steel gazebo structure. Manufacturer to provide shop drawings to building department for approval
55. 5/8" plywood sheathing (paint finish)
56. 1/4" reveal/control joint, see elevations for locations, see detail 7/A-7.1
57. Fiber reinforced paneling over gyp. board.
58. 2" G.I. soffit vent (paint finish)
59. "Tapered Finial" 6" and 4" globes, 40" tall by Fisher Artworks
60. Conc. slab and/or wall see landscape drawings.

KROH/BROESKE
ARCHITECTS
6180 BROCKTON AVE.
RIVERSIDE, CA 92506
TEL 909 788-5940
FAX 909 275-0149

Park and Recreation Offices, White Park

3936 CHESTNUT ST.
RIVERSIDE, CALIFORNIA

CONSULTANTS •

NO.	DATE	REVISION
1	5-5-00	PLAN CHECK

LICENSED ARCHITECT
JAMES L. BROESKE
No. C009174
Ren 11-30-01
STATE OF CALIFORNIA

THIS DRAWING AND THE DESIGNS, ARRANGEMENTS, DEPICTIONS, IDEAS AND OTHER INFORMATION CONTAINED HEREIN CONSTITUTE UNPUBLISHED WORK OF KROH/BROESKE ARCHITECTS AND SHALL REMAIN PROPERTY OF KROH/BROESKE ARCHITECTS IN PERPETUITY. NO PART THEREOF SHALL BE REPRODUCED, COPIED, DISCLOSED, DISTRIBUTED/SOLD, PUBLISHED OR OTHERWISE USED IN ANYWAY WITHOUT THE ADVANCE EXPRESS WRITTEN CONSENT OF KROH/BROESKE ARCHITECTS. ANY CONSTRUCTION CONTRACT WITH THE ABOVE DRAWINGS, OR ANY PART THEREOF, SHALL CONSTITUTE CONCLUSIVE EVIDENCE OF ACCEPTANCE OF THESE RESTRICTIONS.

SHEET TITLE •

ROOF PLAN

DRAWN	•	M. PRICE
CHECKED	•	J. BROESKE
SCALE	•	1/8"=1'-0"
DATE	•	02-28-00
JOB	•	99008
SHEET	•	

A-2.3

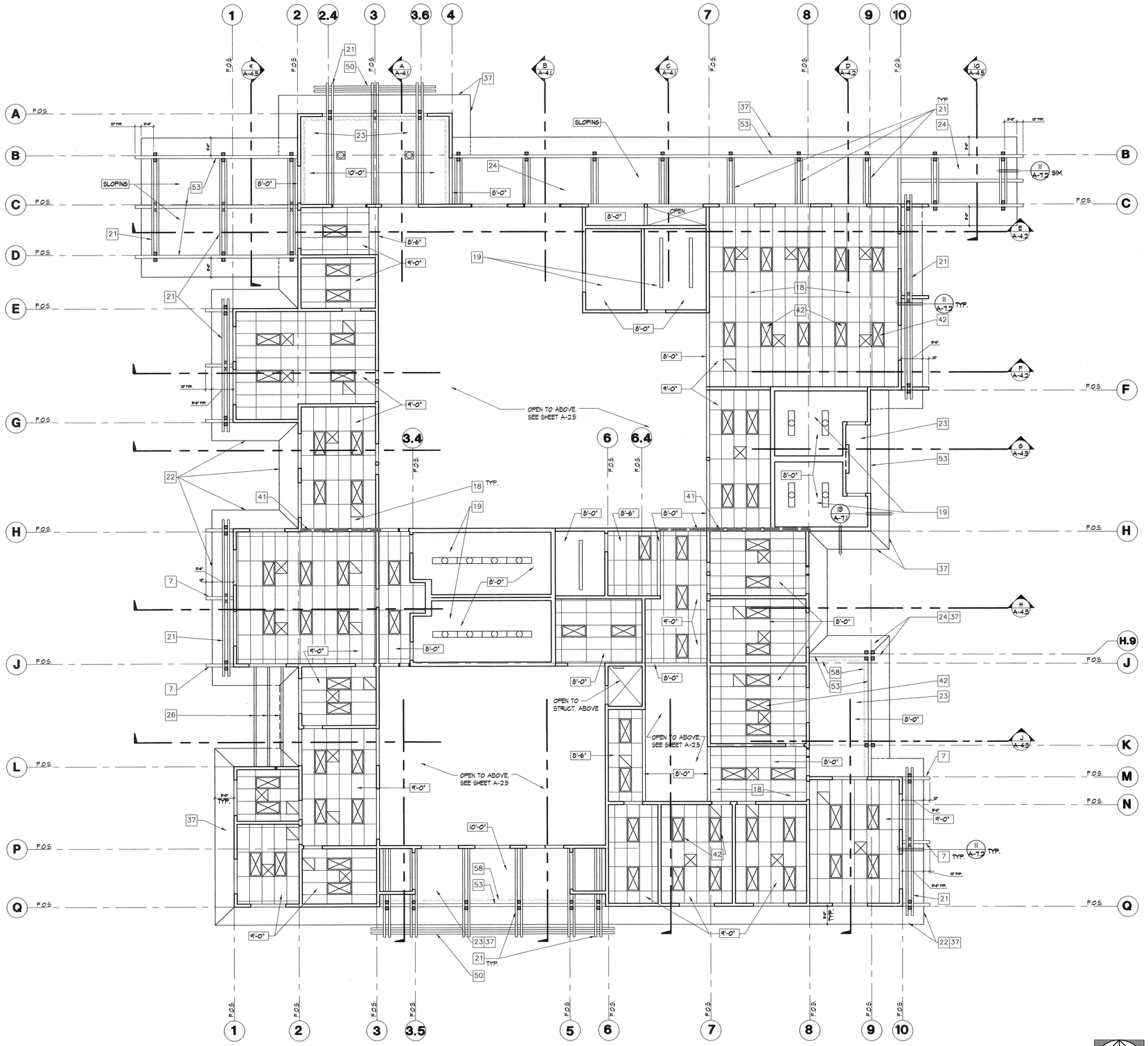

LOWER LEVEL REFLECTED CEILING PLAN

1/8"=1'-0"

KEYNOTES

1. Asphalt shingle roofing.
2. Board siding (stain finish)
3. Built-up wood header trim boards (stain finish) see detail 10/A-7.1
4. Flexi-rock plaster system
5. Windows (see schedule)
6. Cast aluminum signage/lettering (see specifications for text)
7. 6x10 outlooker beams w/ 4x4 kicker supports at dormer roofs (stain finish) see detail 14/A-7.1
8. 6x outlooker beams (stain finish)
9. Double 6x6 post(s) light sandblast/stain finish
10. 2x6 corner trim boards (medium sandblast w/ stain finish) see detail 15/A-7.1
11. Built-up roofing
12. Roof access ladder and door see detail 10/A-7.2
13. Built-up cricket, see detail 2/A-7.1
14. Drinking fountain (high/low)
15. Furniture systems panels by others (N.I.C.)
16. Laminated plastic cabinetry/ counter see interior elevations
17. Laminated plastic storage cabinets/shelves, see interior elevations
18. T-bar suspended ceiling system, by Armstrong, "bold look" white w/ 15/16 prelude, see detail 2/A-7.2
19. 5/8" gyp. board (paint finish)
20. 4" thick concrete slab with vapor barrier per soils report.
21. Double 4X10 beams (light sandblast and stain finish) See detail 11/A-7.2
22. Edge of roof
23. 1x6 T. & G. sheathing (light sandblast and stain finish)
24. Exposed framing w/ 1x6 T. & G. roof sheathing (light sandblast and stain finish)
25. Walkway Boards
26. Built-up gutter/trellis, and sign #2 and sign #3 location, see detail 17/A-7.1
27. Furniture/equipment (N.I.C.)
28. Aluminum pass-thru sliding window (see interior elevations)
29. 4" dia. G.I. down spout in wall and underground to outlet per plan
30. Roof drain and overflow, see detail 3/A-7.2
31. Built-up soffit band, see detail 5/A-4.5
32. Built-up soffit/light valance, see detail 4/A-4.4
33. Dormer framing (see roof plan and structural drawings)
34. Pre-engineered truss, see structural drawings
35. Toilet compartment partitions.
36. H.C. grab bars per T-24
37. Exposed, shaped rafter tails w/ light sandblast and stain finish
38. Mop sink w/ mop rack above.
39. 1 1/4" dia. G.I. handrail, see detail 8/A-7.1
40. 4'-0" high FRP. wainscot.
41. Draft stop per UBC.
42. Light fixture
43. Light bollard fixture, see electrical plans for fixture. See detail 14/A-7.2
44. Concrete stair w/ visual striping and handrail, see detail 8/A-7.1
45. Planting area, see landscape/irrigation drawings.
46. Gate and fence, see landscape drawings.
47. 6" thick concrete curb/wall w/ sack finish typical at all exposed faces, see paving plan, sheet A-1.3 for heights (T.O.W.=6" above F.F. unless noted otherwise) see detail 13/A-7.2
48. 12" thick concrete wall, see detail 13/A-7.2 sim. (T.O.W.=18" above fin. floor elevation)
49. 4" thick concrete slab with rock-salt finish w/ control joints @ 10'-0" o.c. and construction joints @ 20'-0" o.c. max.
50. Double 4x4 S.4.S. trellis members (stain finish) see detail 7/A-7.3
51. R-30 Batt. insulation at roof joists/trusses
52. Built-up rake fascia: 2x4 trim over 2x6 joist (stain finish)
53. 6x beam (light sandblast and stain finish)
54. Pre-fabricated/pre-engineered steel gazebo structure. Manufacturer to provide shop drawings to building department for approval
55. 5/8" plywood sheathing (paint finish)
56. 1/4" reveal/control joint, see elevations for locations, see detail 7/A-7.1
57. Fiber reinforced paneling over gyp. board.
58. 2" G.I. soffit vent (paint finish)
59. "Tapered Finial" 6" and 4" globes, 40" tall by Fisher Artworks
60. Conc. slab and/or wall see landscape drawings.

KROH/BROESKE
ARCHITECTS
6180 BROCKTON AVE.
RIVERSIDE, CA 92506
TEL 909 788-5940
FAX 909 275-0149

Park and Recreation Offices, White Park

3936 CHESTNUT ST.
RIVERSIDE, CALIFORNIA

CONSULTANTS •

NO.	DATE	REVISION
1	5-5-00	PLAN CHECK

LICENSED ARCHITECT JAMES L. BROESKE C. C009174 Ren 11-30-01 STATE OF CALIFORNIA

THIS DRAWING AND THE DESIGNS-IMPROVEMENTS, DEPICTIONS, IDEAS AND OTHER INFORMATION CONTAINED HEREIN CONSTITUTE UNPUBLISHED WORK OF KROH/BROESKE ARCHITECTS AND SHALL REMAIN PROPERTY OF KROH/BROESKE ARCHITECTS IN PERPETUITY. NO PART THEREOF SHALL BE REPRODUCED, COPIED, DISCLOSED, DISTRIBUTED/SOLD, PUBLISHED OR OTHERWISE USED IN ANYWAY WITHOUT THE ADVANCE EXPRESS WRITTEN CONSENT OF KROH/BROESKE ARCHITECTS. VISUAL CONTACT WITH THE ABOVE DRAWINGS, OR ANY PART THEREOF, SHALL CONSTITUTE CONCLUSIVE EVIDENCE OF ACCEPTANCE OF THESE RESTRICTIONS.

SHEET TITLE •

LOW REFLECTED CEILING PLAN

DRAWN	•	M. PRICE
CHECKED	•	J. BROESKE
SCALE	•	1/8"=1'-0"
DATE	•	02-28-00
JOB	•	99008
SHEET	•	

A-2.4

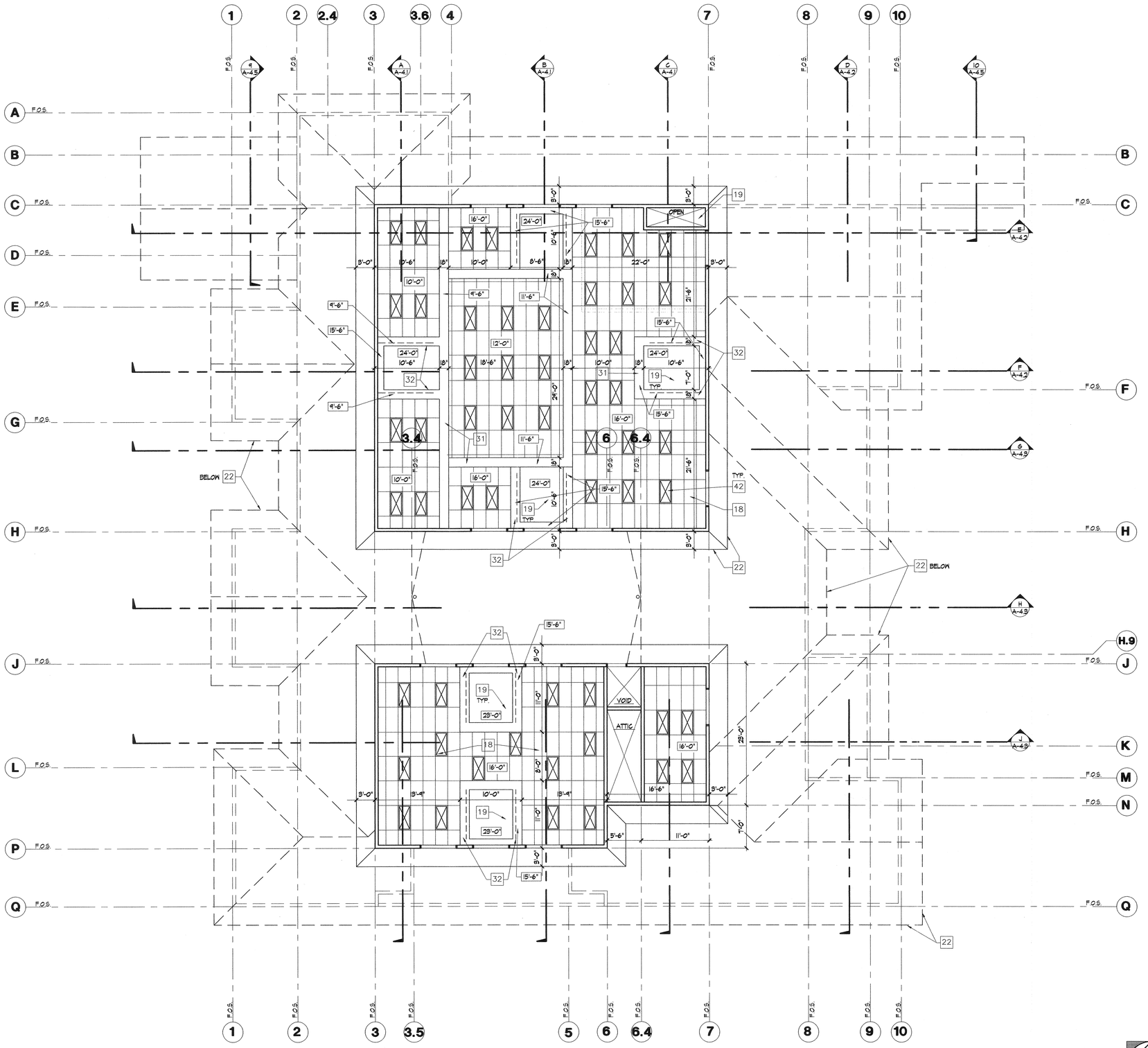

HIGHER LEVEL REFLECTED CEILING PLAN

1/8"=1'-0"

KEYNOTES

1. Asphalt shingle roofing.
2. Board siding (stain finish)
3. Built-up wood header trim boards (stain finish) see detail 10/A-7.1
4. Flexi-rock plaster system
5. Windows (see schedule)
6. Cast aluminum signage/lettering (see specifications for text)
7. 6x10 outlooker beams w/ 4x4 kicker supports at dormer roofs (stain finish) see detail 14/A-7.1
8. 6x outlooker beams (stain finish)
9. Double 6x6 post(s) light sandblast/stain finish
10. 2x6 corner trim boards (medium sandblast w/ stain finish) see detail 15/A-7.1
11. Built-up roofing
12. Roof access ladder and door see detail 10/A-7.2
13. Built-up cricket, see detail 2/A-7.1
14. Drinking fountain (high/low)
15. Furniture systems panels by others (N.I.C.)
16. Laminated plastic cabinetry/ counter see interior elevations
17. Laminated plastic storage cabinets/shelves, see interior elevations
18. T-bar suspended ceiling system, by Armstrong, "bold look" white w/ 15/16 prelude, see detail 2/A-7.2
19. 5/8" gyp. board (paint finish)
20. 4" thick concrete slab with vapor barrier per soils report.
21. Double 4X10 beams (light sandblast and stain finish) See detail 11/A-7.2
22. Edge of roof
23. 1x6 T. & G. sheathing (light sandblast and stain finish)
24. Exposed framing w/ 1x6 T. & G. roof sheathing (light sandblast and stain finish)
25. Walkway Boards
26. Built-up gutter/trellis, and sign #2 and sign #3 location, see detail 17/A-7.1
27. Furniture/equipment (N.I.C.)
28. Aluminum pass-thru sliding window (see interior elevations)
29. 4" dia. G.I. down spout in wall and underground to outlet per plan
30. Roof drain and overflow, see detail 5/A-7.2
31. Built-up soffit band, see detail 5/A-4.5
32. Built-up soffit/light valance, see detail 4/A-4.4
33. Dormer framing (see roof plan and structural drawings)
34. Pre-engineered truss, see structural drawings
35. Toilet compartment partitions.
36. H.C. grab bars per T-24
37. Exposed, shaped rafter tails w/ light sandblast and stain finish
38. Mop sink w/ mop rack above.
39. 1 1/4" dia. G.I. handrail, see detail 8/A-7.1
40. 4'-0" high FRP. wainscot.
41. Draft stop per UBC.
42. Light fixture
43. Light bollard fixture, see electrical plans for fixture. See detail 14/A-7.2
44. Concrete stair w/ visual striping and handrail, see detail 8/A-7.1
45. Planting area, see landscape/irrigation drawings.
46. Gate and fence, see landscape drawings.
47. 6" thick concrete curb/wall w/ sack finish typical at all exposed faces, see paving plan, sheet A-1.3 for heights (T.O.W.=6" above F.F. unless noted otherwise) see detail 13/A-7.2
48. 12" thick concrete wall, see detail 13/A-7.2 sim. (T.O.W.=+18" above fin. floor elevation)
49. 4" thick concrete slab with rock-salt finish w/ control joints @ 10'-0" o.c. and construction joints @ 20'-0" o.c. max.
50. Double 4x4 S.4.S. trellis members (stain finish) see detail 7/A-7.3
51. R-30 Batt. insulation at roof joists/trusses
52. Built-up rake fascia: 2x4 trim over 2x6 joist (stain finish)
53. 6x beam (light sandblast and stain finish)
54. Pre-fabricated/pre-engineered steel gazebo structure. Manufacturer to provide shop drawings to building department for approval
55. 5/8" plywood sheathing (paint finish)
56. 1/4" reveal/control joint, see elevations for locations, see detail 7/A-7.1
57. Fiber reinforced paneling over gyp. board.
58. 2" G.I. soffit vent (paint finish)
59. "Tapered Finial" 6" and 4" globes, 40" tall by Fisher Artworks
60. Conc. slab and/or wall see landscape drawings.

KROH/BROESKE
ARCHITECTS
6180 BROCKTON AVE.
RIVERSIDE, CA 92506
TEL 909 788-5940
FAX 909 275-0149

Park and Recreation Offices, White Park

3936 CHESTNUT ST.
RIVERSIDE, CALIFORNIA

CONSULTANTS •

NO.	DATE	REVISION
1	5-5-00	PLAN CHECK

LICENSED ARCHITECT JAMES L. BROESKE C009174 Ren 11-30-01 STATE OF CALIFORNIA

THIS DRAWING AND THE DESIGNS, ARRANGEMENTS, DEPICTIONS, IDEAS AND OTHER INFORMATION CONTAINED HEREIN CONSTITUTE UNPUBLISHED WORK OF KROH/BROESKE ARCHITECTS AND SHALL REMAIN PROPERTY OF KROH/BROESKE ARCHITECTS IN PERPETUITY. NO PART THEREOF SHALL BE REPRODUCED, COPIED, DISCLOSED, DISTRIBUTED,SOLD, PUBLISHED OR OTHERWISE USED IN ANYWAY WITHOUT THE ADVANCE EXPRESS WRITTEN CONSENT OF KROH/BROESKE ARCHITECTS. VISUAL CONTACT WITH THE ABOVE DRAWINGS, OR ANY PART THEREOF, SHALL CONSTITUTE CONCLUSIVE EVIDENCE OF ACCEPTANCE OF THESE RESTRICTIONS.

SHEET TITLE •

HIGH REFLECTED CEILING PLAN

DRAWN	•	M. PRICE
CHECKED	•	J. BROESKE
SCALE	•	1/8"=1'-0"
DATE	•	02-28-00
JOB	•	99008
SHEET	•	

A-2.5

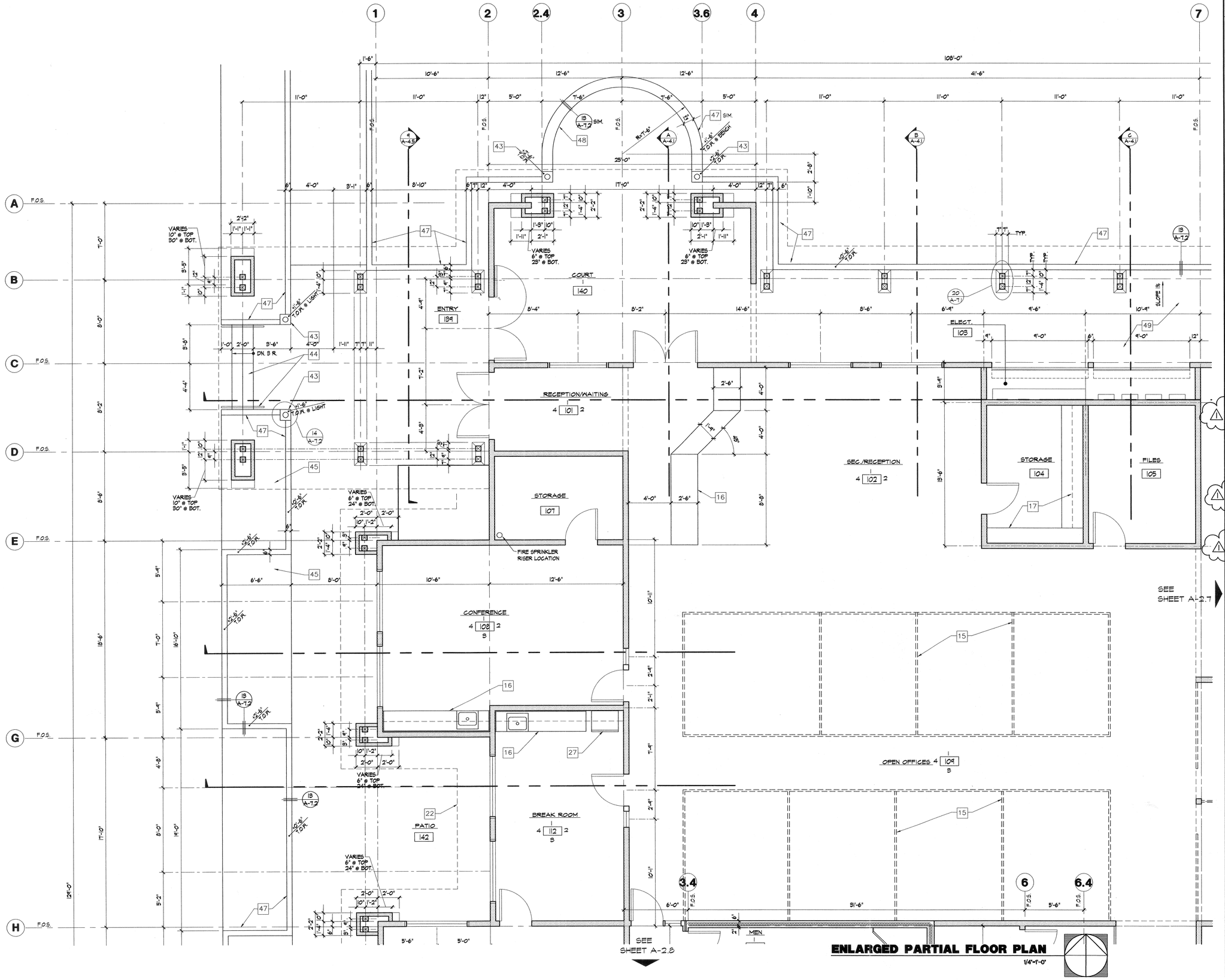

KEYNOTES

1. Asphalt shingle roofing.
2. Board siding (stain finish)
3. Built-up wood header trim boards (stain finish) see detail 10/A-7.1
4. Flexi-rock plaster system
5. Windows (see schedule)
6. Cast aluminum signage/lettering (see specifications for text)
7. 6x10 outlooker beams w/ 4x4 kicker supports at dormer roofs (stain finish) see detail 14/A-7.1
8. 6x outlooker beams (stain finish)
9. Double 6x6 post(s) light sandblast/stain finish
10. 2x6 corner trim boards (medium sandblast w/ stain finish) see detail 15/A-7.1
11. Built-up roofing
12. Roof access ladder and door see detail 10/A-7.2
13. Built-up cricket, see detail 2/A-7.1
14. Drinking fountain (high/low)
15. Furniture systems panels by others (N.I.C.)
16. Laminated plastic cabinetry/ counter see interior elevations
17. Laminated plastic storage cabinets/shelves, see interior elevations
18. T-bar suspended ceiling system, by Armstrong, "bold look" white w/ 15/16 prelude, see detail 2/A-7.2
19. 5/8" gyp. board (paint finish)
20. 4" thick concrete slab with vapor barrier per soils report.
21. Double 4X10 beams (light sandblast and stain finish) See detail 11/A-7.2
22. Edge of roof
23. 1x6 T. & G. sheathing (light sandblast and stain finish)
24. Exposed framing w/ 1x6 T. & G. roof sheathing (light sandblast and stain finish)
25. Walkway Boards
26. Built-up gutter/trellis, and sign #2 and sign #3 location, see detail 17/A-7.1
27. Furniture/equipment (N.I.C.)
28. Aluminum pass-thru sliding window (see interior elevations)
29. 4" dia. G.I. down spout in wall and underground to outlet per plan
30. Roof drain and overflow, see detail 5/A-7.2
31. Built-up soffit band, see detail 5/A-4.5
32. Built-up soffit/light valance, see detail 4/A-4.4
33. Dormer framing (see roof plan and structural drawings)
34. Pre-engineered truss, see structural drawings
35. Toilet compartment partitions.
36. H.C. grab bars per T-24
37. Exposed, shaped rafter tails w/ light sandblast and stain finish
38. Mop sink w/ mop rack above.
39. 1 1/4" dia. G.I. handrail, see detail 8/A-7.1
40. 4'-0" high FRP. wainscot.
41. Draft stop per UBC.
42. Light fixture
43. Light ballard fixture, see electrical plans for fixture. See detail 14/A-7.2
44. Concrete stair w/ visual striping and handrail, see detail 8/A-7.1
45. Planting area, see landscape/irrigation drawings.
46. Gate and fence, see landscape drawings.
47. 6" thick concrete curb/wall w/ sack finish typical at all exposed faces, see paving plan, sheet A-1.3 for heights (T.O.W.=6" above F.F. unless noted otherwise) see detail 13/A-7.2
48. 12" thick concrete wall, see detail 13/A-7.2 sim. (T.O.W.=+13" above fin. floor elevation)
49. 4" thick concrete slab with rock-salt finish w/ control joints @ 10'-0" o.c. and construction joints @ 20'-0" o.c. max.
50. Double 4x4 S.4.S. trellis members (stain finish) see detail 7/A-7.3
51. R-30 Batt. insulation at roof joists/trusses
52. Built-up rake fascia: 2x4 trim over 2x6 joist (stain finish)
53. 6x beam (light sandblast and stain finish)
54. Pre-fabricated/pre-engineered steel gazebo structure. Manufacturer to provide shop drawings to building department for approval
55. 5/8" plywood sheathing (paint finish)
56. 1/4" reveal/control joint, see elevations for locations, see detail 7/A-7.1
57. Fiber reinforced paneling over gyp. board.
58. 2" G.I. soffit vent (paint finish)
59. "Tapered Finial" 6" and 4" globes, 40" tall by Fisher Artworks
60. Conc. slab and/or wall see landscape drawings.

LEGEND

- 8" sound wall, see detail 12/A-7.2
- 2x6 studs @ 16" o.c. w/ full thickness batt. insulation
- Top of wall elevation designation (ht. indicated is taken from F.F. level)

KROH/BROESKE
ARCHITECTS
6180 BROCKTON AVE.
RIVERSIDE, CA 92506
TEL 909 788-5940
FAX 909 275-0149

Park and Recreation Offices, White Park

3936 CHESTNUT ST.
RIVERSIDE, CALIFORNIA

CONSULTANTS •

NO.	DATE	REVISION
1	5-5-00	PLAN CHECK

LICENSED ARCHITECT JAMES V. BROESKE No. C009174 Ren 11-30-01 STATE OF CALIFORNIA

THIS DRAWING AND THE DESIGNS, ARRANGEMENTS, DEPICTIONS, IDEAS AND OTHER INFORMATION CONTAINED HEREIN CONSTITUTE UNPUBLISHED WORK OF KROH/BROESKE ARCHITECTS AND SHALL REMAIN PROPERTY OF KROH/BROESKE ARCHITECTS IN PERPETUITY. NO PART THEREOF SHALL BE REPRODUCED, COPIED, DISCLOSED, DISTRIBUTED,SOLD, PUBLISHED OR OTHERWISE USED WITHOUT THE PRIOR WRITTEN CONSENT OF KROH/BROESKE ARCHITECTS. VISUAL CONTACT WITH THE ABOVE DRAWINGS OR ANY PART THEREOF, SHALL CONSTITUTE CONCLUSIVE EVIDENCE OF ACCEPTANCE OF THESE RESTRICTIONS.

SHEET TITLE •

ENLARGED FLOOR PLAN

DRAWN	•	M. PRICE
CHECKED	•	J. BROESKE
SCALE	•	1/4"=1'-0"
DATE	•	02-28-00
JOB	•	99008
SHEET	•	

A-2.6

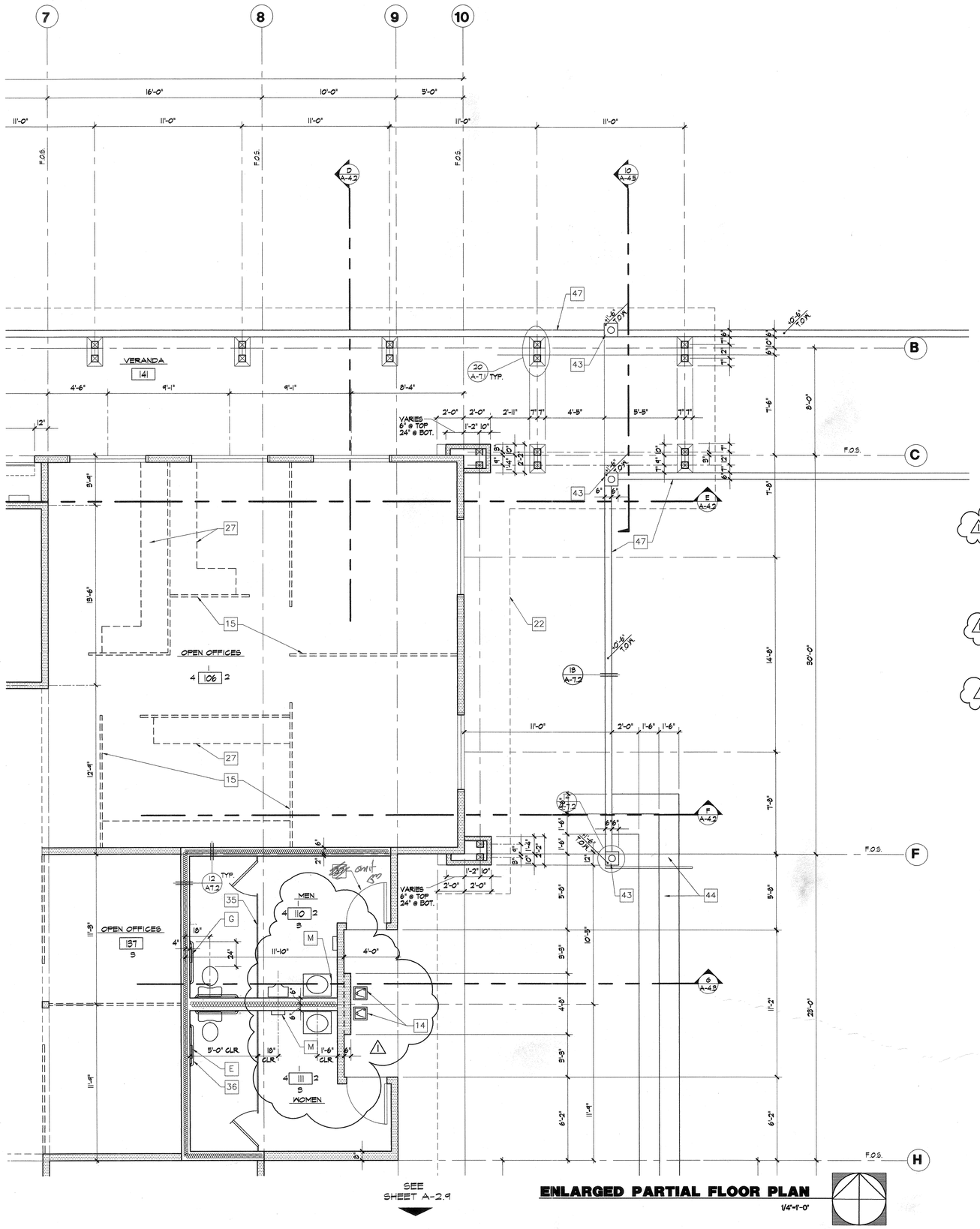

SEE SHEET A-2.6

SEE SHEET A-2.9

TOILET ACCESSORIES SCHEDULE

DESCRIPTION	MODEL No.
A. MIRROR	B-290
B. TOILET TISSUE DISPENSER	B-2740
C. SOAP DISPENSER	B-4112
D. COMBO TOILET SEAT COVER DISPENSER, SANITARY NAPKIN DISPENSER & TOILET TISSUE DISPENSER (PARTITION MOUNTED)	B-357
E. COMBO TOILET SEAT COVER DISPENSER, SANITARY NAPKIN DISPENSER & TOILET TISSUE DISPENSER (RECESSED WALL MOUNTED)	B-3574
F. TOILET SEAT COVER DISPENSER, SANITARY NAPKIN DISPENSER & TOILET TISSUE DISPENSER (RECESSED WALL MOUNTED)	B-3579
G. COMBO TOILET SEAT COVER DISPENSER & TOILET TISSUE DISPENSER	B-3474
H. COMBO TOILET SEAT COVER DISPENSER & TOILET TISSUE DISPENSER	B-3479
J. 1 1/4" DIA. GRAB BARS	B-5637
K. DOOR BUMPER	B-667
L. TOILET COMPARTMENTS AS MANUFACTURED BY SANTANA SOLID PLASTIC PRODUCTS.	
M. ELECTRIC HAND DRYER BY FASTAIR (WITH UNIT IN ATTIC)	HD04
N. PAPER TOWEL DISPENSER/WASTE RECEPTACLE	B-3944

NOTE: ALL ACCESSORY PRODUCTS AS MANUFACTURED BY BOBRICK. (UNLESS NOTED OTHERWISE)

ENLARGED PARTIAL FLOOR PLAN
1/4"-1'-0"

KEYNOTES

1. Asphalt shingle roofing.
2. Board siding (stain finish)
3. Built-up wood header trim boards (stain finish) see detail 10/A-7.1
4. Flexi-rock plaster system
5. Windows (see schedule)
6. Cast aluminum signage/lettering (see specifications for text)
7. 6x10 outlooker beams w/ 4x4 kicker supports at dormer roofs (stain finish) see detail 14/A-7.1
8. 6x outlooker beams (stain finish)
9. Double 6x6 post(s) light sandblast/stain finish
10. 2x6 corner trim boards (medium sandblast w/ stain finish) see detail 15/A-7.1
11. Built-up roofing
12. Roof access ladder and door see detail 10/A-7.2
13. Built-up cricket, see detail 2/A-7.1
14. Drinking fountain (high/low)
15. Furniture systems panels by others (N.I.C.)
16. Laminated plastic cabinetry/ counter see interior elevations
17. Laminated plastic storage cabinets/shelves, see interior elevations
18. T-bar suspended ceiling system, by Armstrong, "bold look" white w/ 15/16 prelude, see detail 2/A-7.2
19. 5/8" gyp. board (paint finish)
20. 4" thick concrete slab with vapor barrier per soils report.
21. Double 4X10 beams (light sandblast and stain finish) See detail 11/A-7.2
22. Edge of roof
23. 1x6 T. & G. sheathing (light sandblast and stain finish)
24. Exposed framing w/ 1x6 T. & G. roof sheathing (light sandblast and stain finish)
25. Walkway Boards
26. Built-up gutter/trellis, and sign #2 and sign #3 location, see detail 17/A-7.1
27. Furniture/equipment (N.I.C.)
28. Aluminum pass-thru sliding window (see interior elevations)
29. 4" dia. G.I. down spout in wall and underground to outlet per plan
30. Roof drain and overflow, see detail 3/A-7.2
31. Built-up soffit band, see detail 5/A-4.5
32. Built-up soffit/light valance, see detail 4/A-4.4
33. Dormer framing (see roof plan and structural drawings)
34. Pre-engineered truss, see structural drawings
35. Toilet compartment partitions.
36. H.C. grab bars per T-24
37. Exposed, shaped rafter tails w/ light sandblast and stain finish
38. Mop sink w/ mop rack above.
39. 1 1/4" dia. G.I. handrail, see detail 8/A-7.1
40. 4'-0" high FRP, mainscot.
41. Draft stop per UBC.
42. Light fixture
43. Light ballard fixture, see electrical plans for fixture. See detail 14/A-7.2
44. Concrete stair w/ visual striping and handrail, see detail 8/A-7.1
45. Planting area, see landscape/irrigation drawings.
46. Gate and fence, see landscape drawings.
47. 6" thick concrete curb/wall w/ sack finish typical at all exposed faces, see paving plan, sheet A-1.3 for heights (T.O.W.=6" above F.F. unless noted otherwise) see detail 13/A-7.2
48. 12" thick concrete wall, see detail 13/A-7.2 sim. (T.O.W.=18" above fin. floor elevation)
49. 4" thick concrete slab with rock-salt finish w/ control joints @ 10'-0" o.c. and construction joints @ 20'-0" o.c. max.
50. Double 4x4 S.4.S. trellis members (stain finish) see detail 7/A-7.3
51. R-30 Batt. insulation at roof joists/trusses
52. Built-up rake fascia: 2x4 trim over 2x6 joist (stain finish)
53. 6x beam (light sandblast and stain finish)
54. Pre-fabricated/pre-engineered steel gazebo structure. Manufacturer to provide shop drawings to building department for approval
55. 5/8" plywood sheathing (paint finish)
56. 1/4" reveal/control joint, see elevations for locations, see detail 7/A-7.1
57. Fiber reinforced paneling over gyp. board.
58. 2" G.I. soffit vent (paint finish)
59. "Tapered Finial" 6" and 4" globes, 40" tall by Fisher Artworks
60. Conc. slab and/or wall see landscape drawings.

LEGEND

- 8" sound wall, see detail 12/A-7.2
- 2x6 studs @ 16" o.c. w/ full thickness batt. insulation
- 10'-6" T.O.W. — Top of wall elevation designation (ht. indicated is taken from F.F. level)

KROH/BROESKE
ARCHITECTS
6180 BROCKTON AVE.
RIVERSIDE, CA 92506
TEL 909 788-5940
FAX 909 275-0149

Park and Recreation Offices, White Park

3936 CHESTNUT ST.
RIVERSIDE, CALIFORNIA

CONSULTANTS •

NO.	DATE	REVISION
1	5-5-00	PLAN CHECK

LICENSED ARCHITECT JAMES L. BROESKE C009174 Ren 11-30-01 STATE OF CALIFORNIA

THIS DRAWING AND THE DESIGNS, ARRANGEMENTS, DEFECTIONS, IDEAS AND OTHER INFORMATION CONTAINED HEREIN CONSTITUTE UNPUBLISHED WORK OF KROH/BROESKE ARCHITECTS AND SHALL REMAIN PROPERTY OF KROH/BROESKE ARCHITECTS IN PERPETUITY. NO PART THEREOF SHALL BE REPRODUCED, COPIED, DISCLOSED, DISTRIBUTED,SOLD, PUBLISHED OR OTHERWISE USED IN ANYWAY WITHOUT THE ADVANCE EXPRESS WRITTEN CONSENT OF KROH/BROESKE ARCHITECTS. ANY VISUAL CONTACT WITH THE ABOVE DRAWINGS OR ANY PART THEREOF, SHALL CONSTITUTE CONCLUSIVE EVIDENCE OF ACCEPTANCE OF THESE RESTRICTIONS.

SHEET TITLE •

ENLARGED FLOOR PLAN

DRAWN	•	M. PRICE
CHECKED	•	J. BROESKE
SCALE	•	1/4"-1'-0"
DATE	•	02-28-00
JOB	•	99008
SHEET	•	

A-2.7

Thu Jun 01 11:02:46 2000

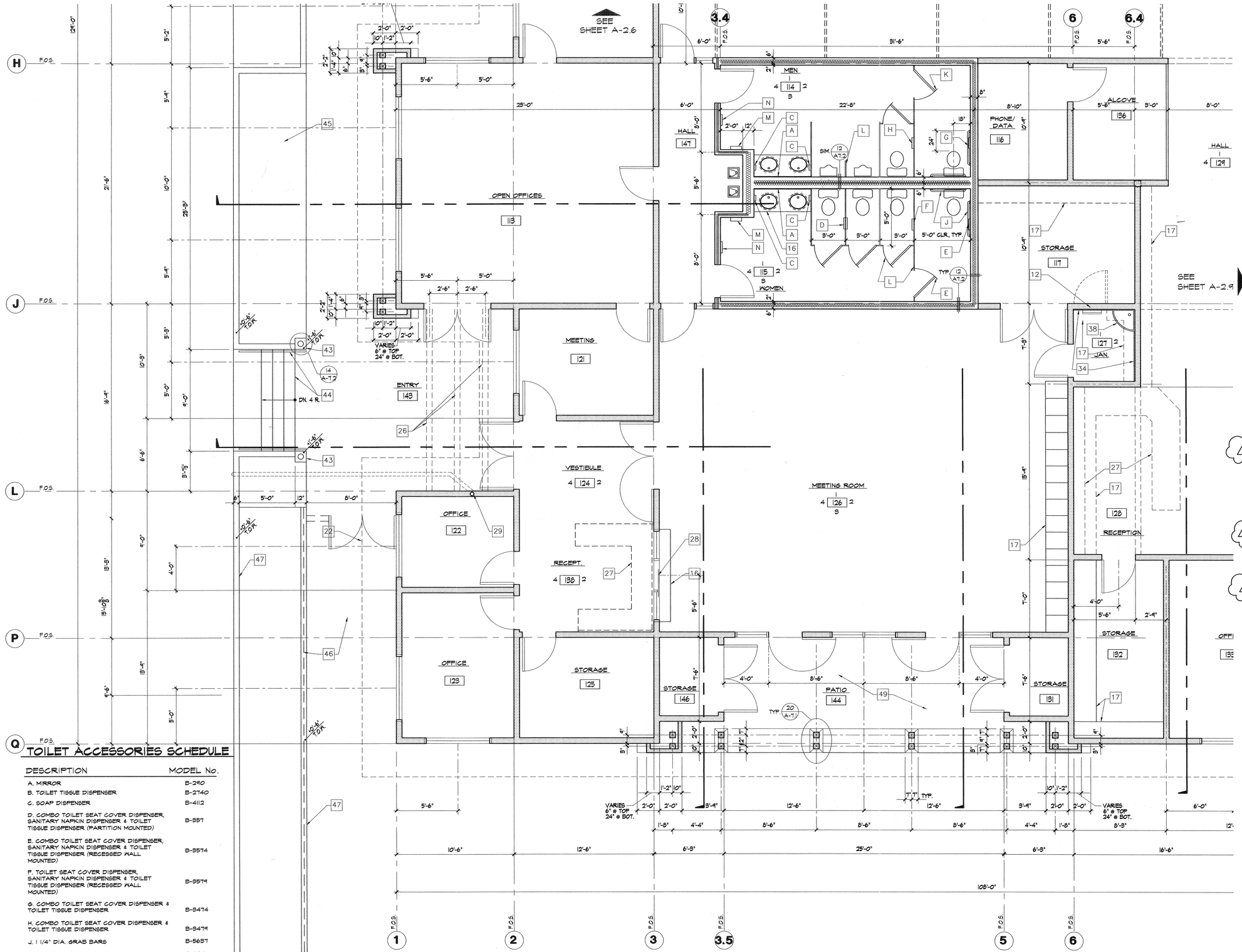

TOILET ACCESSORIES SCHEDULE

DESCRIPTION	MODEL No.
A. MIRROR	B-290
B. TOILET TISSUE DISPENSER	B-2740
C. SOAP DISPENSER	B-4112
D. COMBO TOILET SEAT COVER DISPENSER, SANITARY NAPKIN DISPENSER & TOILET TISSUE DISPENSER (PARTITION MOUNTED)	B-357
E. COMBO TOILET SEAT COVER DISPENSER, SANITARY NAPKIN DISPENSER & TOILET TISSUE DISPENSER (RECESSED WALL MOUNTED)	B-3574
F. TOILET SEAT COVER DISPENSER, SANITARY NAPKIN DISPENSER & TOILET TISSUE DISPENSER (RECESSED WALL MOUNTED)	B-3574
G. COMBO TOILET SEAT COVER DISPENSER & TOILET TISSUE DISPENSER	B-3474
H. COMBO TOILET SEAT COVER DISPENSER & TOILET TISSUE DISPENSER	B-3474
J. 1 1/4" DIA. GRAB BARS	B-5637
K. DOOR BUMPER	B-637
L. TOILET COMPARTMENTS AS MANUFACTURED BY SANTANA SOLID PLASTIC PRODUCTS.	
M. ELECTRIC HAND DRYER BY FASTAIR (WITH UNIT IN ATTIC)	HD04
N. PAPER TOWEL DISPENSER/WASTE RECEPTACLE	B-3444

NOTE: ALL ACCESSORY PRODUCTS AS MANUFACTURED BY BOBRICK. (UNLESS NOTED OTHERWISE)

ENLARGED PARTIAL FLOOR PLAN

1/4"-1'-0"

KEYNOTES

1. Asphalt shingle roofing.
2. Board siding (stain finish)
3. Built-up wood header trim boards (stain finish) see detail 10/A-7.1
4. Flexi-rock plaster system
5. Windows (see schedule)
6. Cast aluminum signage/lettering (see specifications for text)
7. 6x10 outlooker beams w/ 4x4 kicker supports at dormer roofs (stain finish) see detail 14/A-7.1
8. 6x outlooker beams (stain finish)
9. Double 6x6 post(s) light sandblast/stain finish
10. 2x6 corner trim boards (medium sandblast w/ stain finish) see detail 15/A-7.1
11. Built-up roofing
12. Roof access ladder and door see detail 10/A-7.2
13. Built-up cricket, see detail 2/A-7.1
14. Drinking fountain (high/low)
15. Furniture systems panels by others (N.I.C.)
16. Laminated plastic cabinetry/ counter see interior elevations
17. Laminated plastic storage cabinets/shelves, see interior elevations
18. T-bar suspended ceiling system, by Armstrong, "bold look" white w/ 15/16 prelude, see detail 2/A-7.2
19. 5/8" gyp. board (paint finish)
20. 4" thick concrete slab with vapor barrier per soils report.
21. Double 4X10 beams (light sandblast and stain finish) See detail 11/A-7.2
22. Edge of roof
23. 1x6 T. & G. sheathing (light sandblast and stain finish)
24. Exposed framing w/ 1x6 T. & G. roof sheathing (light sandblast and stain finish)
25. Walkway Boards
26. Built-up gutter/trellis, and sign #2 and sign #5 location, see detail 17/A-7.1
27. Furniture/equipment (N.I.C.)
28. Aluminum pass-thru sliding window (see interior elevations)
29. 4" dia. G.I. down spout in wall and underground to outlet per plan
30. Roof drain and overflow, see detail 3/A-7.2
31. Built-up soffit band, see detail 5/A-4.5
32. Built-up soffit/light valance, see detail 4/A-4.4
33. Dormer framing (see roof plan and structural drawings)
34. Pre-engineered truss, see structural drawings
35. Toilet compartment partitions.
36. H.C. grab bars per T-24
37. Exposed, shaped rafter tails w/ light sandblast and stain finish
38. Mop sink w/ mop rack above.
39. 1 1/4" dia. G.I. handrail, see detail 8/A-7.1
40. 4'-0" high FRP, mainsail.
41. Draft stop per UBC.
42. Light fixture
43. Light bollard fixture, see electrical plans for fixture. See detail 14/A-7.2
44. Concrete stair w/ visual striping and handrail, see detail 8/A-7.1
45. Planting area, see landscape/irrigation drawings.
46. Gate and fence, see landscape drawings.
47. 6" thick concrete curb/wall w/ sack finish typical at all exposed faces, see paving plan, sheet A-1.3 for heights (T.O.W.=6" above F.F. unless noted otherwise) see detail 13/A-7.2
48. 12" thick concrete wall, see detail 13/A-7.2 sim. (T.O.W.=+18" above fin. floor elevation)
49. 4" thick concrete slab with rock-salt finish w/ control joints @ 10'-0" o.c. and construction joints @ 20'-0" o.c. max.
50. Double 4x4 S.4.S. trellis members (stain finish) see detail 7/A-7.3
51. R-30 Batt. insulation at roof joists/trusses
52. Built-up rake fascia: 2x4 trim over 2x6 joist (stain finish)
53. 6x beam (light sandblast and stain finish)
54. Pre-fabricated/pre-engineered steel gazebo structure. Manufacturer to provide shop drawings to building department for approval
55. 5/8" plywood sheathing (paint finish)
56. 1/4" reveal/control joint, see elevations for locations, see detail 7/A-7.1
57. Fiber reinforced paneling over gyp. board.
58. 2" G.I. soffit vent (paint finish)
59. "Tapered Finial" 6" and 4" globes, 40" tall by Fisher Artworks
60. Conc. slab and/or wall see landscape drawings.

LEGEND

- 8" sound wall, see detail 12/A-7.2
- 2x6 studs @ 16" o.c. w/ full thickness batt. insulation
- 10'-6" T.O.K. — Top of wall elevation designation (ht. indicated is taken from F.F. level)

KROH/BROESKE
ARCHITECTS
6180 BROCKTON AVE.
RIVERSIDE, CA 92506
TEL 909 788-5940
FAX 909 275-0149

Park and Recreation Offices, White Park

3936 CHESTNUT ST.
RIVERSIDE, CALIFORNIA

CONSULTANTS •

NO.	DATE	REVISION
1	5-5-00	PLAN CHECK

LICENSED ARCHITECT JAMES L. BROESKE C-009172 Ren 11-30-01 STATE OF CALIFORNIA

THIS DRAWING AND THE DESIGN ARRANGEMENTS, DEPICTIONS, IDEAS AND OTHER INFORMATION CONTAINED HEREIN CONSTITUTE UNPUBLISHED WORK OF KROH/BROESKE ARCHITECTS AND SHALL REMAIN PROPERTY OF KROH/BROESKE ARCHITECTS IN PERPETUITY. NO PART THEREOF SHALL BE REPRODUCED, COPIED, DISCLOSED, DISTRIBUTED,SOLD, PUBLISHED OR OTHERWISE USED IN ANY WAY WITHOUT THE ADVANCE EXPRESS WRITTEN CONSENT OF KROH/BROESKE ARCHITECTS. VISUAL CONTACT WITH THE ABOVE DRAWINGS OR ANY PART THEREOF SHALL CONSTITUTE CONCLUSIVE EVIDENCE OF ACCEPTANCE OF THESE RESTRICTIONS.

SHEET TITLE •

ENLARGED FLOOR PLAN

DRAWN	•	M. PRICE
CHECKED	•	J. BROESKE
SCALE	•	1/4"-1'-0"
DATE	•	02-28-00
JOB	•	99008
SHEET	•	

A-2.8

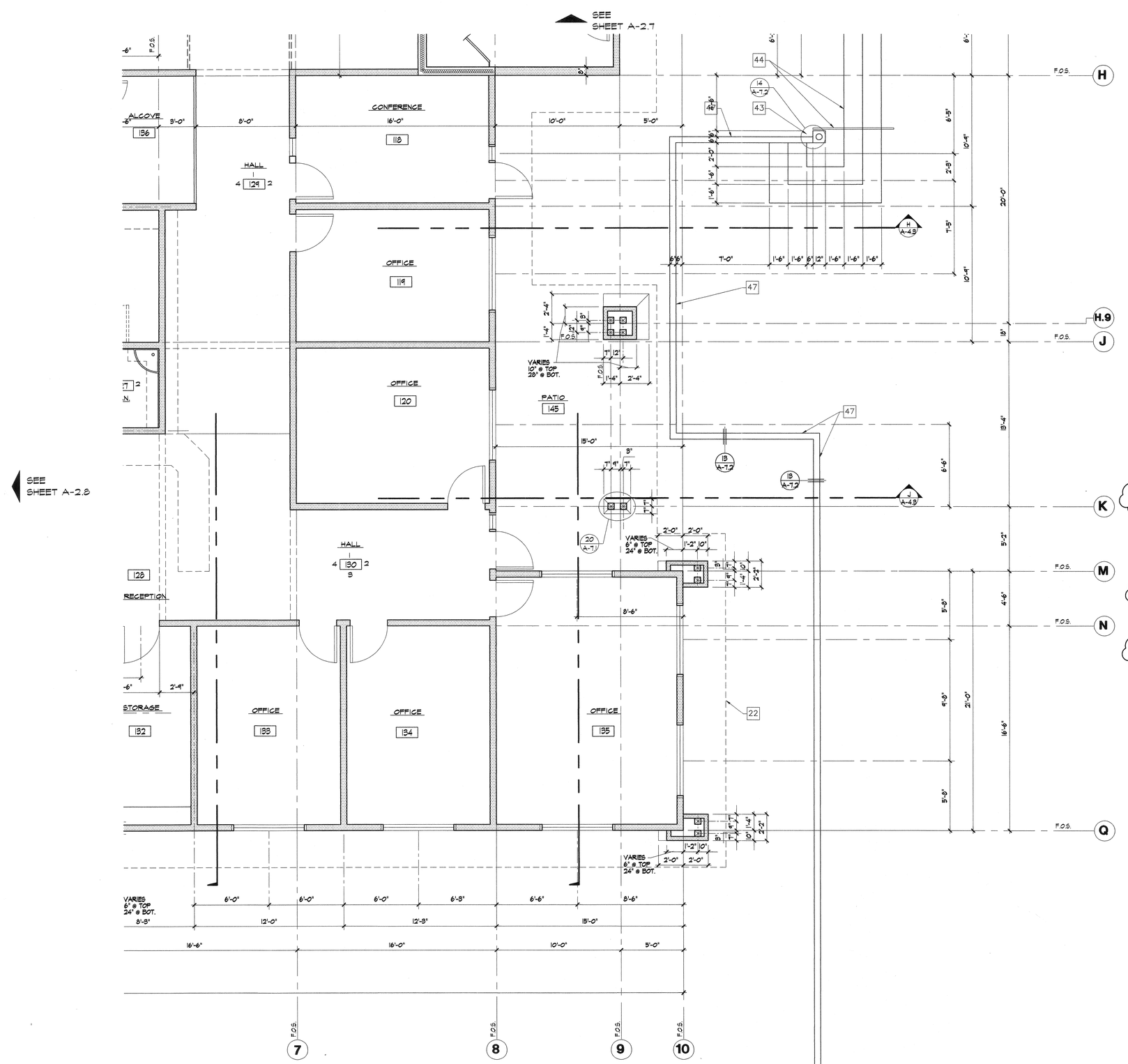

ENLARGED PARTIAL FLOOR PLAN

1/4"=1'-0"

KEYNOTES

1. Asphalt shingle roofing.
2. Board siding (stain finish)
3. Built-up wood header trim boards (stain finish) see detail 10/A-7.1
4. Flexi-rock plaster system
5. Windows (see schedule)
6. Cast aluminum signage/lettering (see specifications for text)
7. 6x10 outlooker beams w/ 4x4 kicker supports at dormer roofs (stain finish) see detail 14/A-7.1
8. 6x outlooker beams (stain finish)
9. Double 6x6 post(s) light sandblast/stain finish
10. 2x6 corner trim boards (medium sandblast w/ stain finish) see detail 15/A-7.1
11. Built-up roofing
12. Roof access ladder and door see detail 10/A-7.2
13. Built-up cricket, see detail 2/A-7.1
14. Drinking fountain (high/low)
15. Furniture systems panels by others (N.I.C.)
16. Laminated plastic cabinetry/ counter see interior elevations
17. Laminated plastic storage cabinets/shelves, see interior elevations
18. T-bar suspended ceiling system, by Armstrong, "bold look" white w/ 15/16 prelude, see detail 2/A-7.2
19. 5/8" gyp. board (paint finish)
20. 4" thick concrete slab with vapor barrier per soils report.
21. Double 4X10 beams (light sandblast and stain finish) See detail 11/A-7.2
22. Edge of roof
23. 1x6 T. & G. sheathing (light sandblast and stain finish)
24. Exposed framing w/ 1x6 T. & G. roof sheathing (light sandblast and stain finish)
25. Walkway Boards
26. Built-up gutter/trellis, and sign #2 and sign #3 location, see detail 17/A-7.1
27. Furniture/equipment (N.I.C.)
28. Aluminum pass-thru sliding window (see interior elevations)
29. 4" dia. G.I. down spout in wall and underground to outlet per plan
30. Roof drain and overflow, see detail 3/A-7.2
31. Built-up soffit band, see detail 5/A-4.5
32. Built-up soffit/light valance, see detail 4/A-4.4
33. Dormer framing (see roof plan and structural drawings)
34. Pre-engineered truss, see structural drawings
35. Toilet compartment partitions.
36. H.C. grab bars per T-24
37. Exposed, shaped rafter tails w/ light sandblast and stain finish
38. Mop sink w/ mop rack above.
39. 1 1/4" dia. G.I. handrail, see detail 8/A-7.1
40. 4'-0" high FRP. wainscot.
41. Draft stop per UBC.
42. Light fixture
43. Light bollard fixture, see electrical plans for fixture. See detail 14/A-7.2
44. Concrete stair w/ visual striping and handrail, see detail 8/A-7.1
45. Planting area, see landscape/irrigation drawings.
46. Gate and fence, see landscape drawings.
47. 6" thick concrete curb/wall w/ sack finish typical at all exposed faces, see paving plan, sheet A-1.3 for heights (T.O.W.=6" above F.F. unless noted otherwise) see detail 15/A-7.2
48. 12" thick concrete wall, see detail 15/A-7.2 sim. (T.O.W.=+18" above fin. floor elevation)
49. 4" thick concrete slab with rock-salt finish w/ control joints @ 10'-0" o.c. and construction joints @ 20'-0" o.c. max.
50. Double 4x4 S.4.S. trellis members (stain finish) see detail 7/A-7.3
51. R-30 Batt. insulation at roof joists/brusses
52. Built-up rake fascia: 2x4 trim over 2x6 joist (stain finish)
53. 6x beam (light sandblast and stain finish)
54. Pre-fabricated/pre-engineered steel gazebo structure. Manufacturer to provide shop drawings to building department for approval
55. 5/8" plywood sheathing (paint finish)
56. 1/4" reveal/control joint, see elevations for locations, see detail 7/A-7.1
57. Fiber reinforced paneling over gyp. board.
58. 21" G.I. soffit vent (paint finish)
59. "Tapered Finial" 6" and 4" globes, 40" tall by Fisher Artworks
60. Conc. slab and/or wall see landscape drawings.

LEGEND

- 8" sound wall, see detail 12/A-7.2
- 2x6 studs @ 16" o.c. w/ full thickness batt. insulation
- 10'-8" TOP — Top of wall elevation designation (ft. indicated is taken from F.F. level)

KROH/BROESKE
ARCHITECTS
6180 BROCKTON AVE.
RIVERSIDE, CA 92506
TEL 909 788-5940
FAX 909 275-0149

Park and Recreation Offices, White Park

3936 CHESTNUT ST.
RIVERSIDE, CALIFORNIA

CONSULTANTS •

NO.	DATE	REVISION
1	5-5-00	PLAN CHECK

LICENSED ARCHITECT — JAMES L. BROESKE — C009174 — Ren 11-30-01 — STATE OF CALIFORNIA

THIS DRAWING AND THE DESIGNS, ARRANGEMENTS, DEPICTIONS, IDEAS AND OTHER INFORMATION CONTAINED HEREIN CONSTITUTE UNPUBLISHED WORK OF KROH/BROESKE ARCHITECTS AND SHALL REMAIN PROPERTY OF KROH/BROESKE ARCHITECTS IN PERPETUITY. NO PART THEREOF SHALL BE REPRODUCED, COPIED, DISCLOSED, DISTRIBUTED,SOLD, PUBLISHED OR OTHERWISE USED IN ANY WAY WITHOUT THE ADVANCE, EXPRESS WRITTEN CONSENT OF KROH/BROESKE ARCHITECTS. VISUAL CONTACT WITH THE ABOVE DRAWINGS, OR ANY PART THEREOF, SHALL CONSTITUTE CONCLUSIVE EVIDENCE OF ACCEPTANCE OF THESE RESTRICTIONS.

SHEET TITLE •

ENLARGED FLOOR PLAN

DRAWN	•	M. PRICE
CHECKED	•	J. BROESKE
SCALE	•	1/4"=1'-0"
DATE	•	2-28-00
JOB	•	99008
SHEET	•	

A-2.9

Thu Jun 01 11:04:20 2000

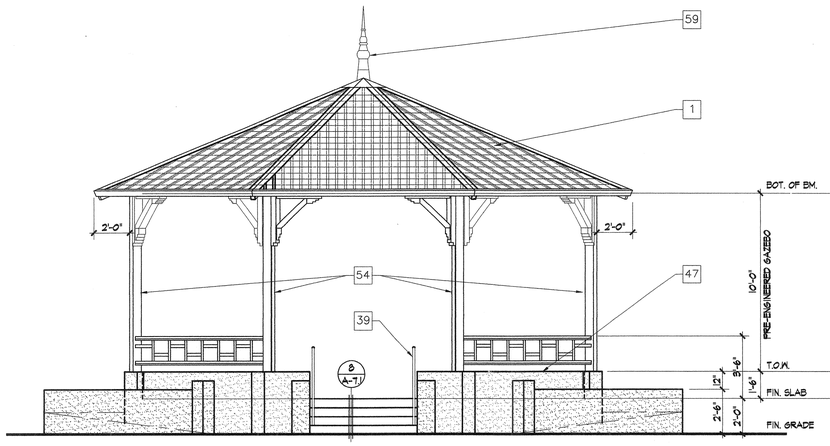

EAST ELEVATION (WEST SIMILAR)

SCALE: 1/4"=1'-0"

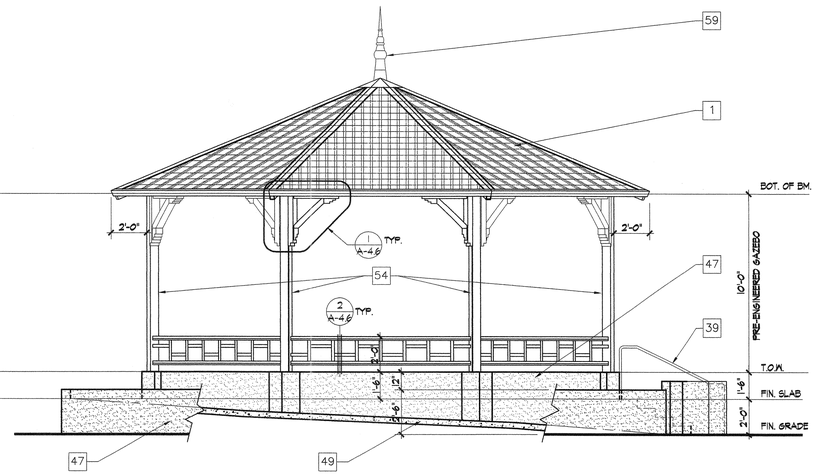

SOUTH ELEVATION (NORTH OPPOSITE HAND)

SCALE: 1/4"=1'-0"

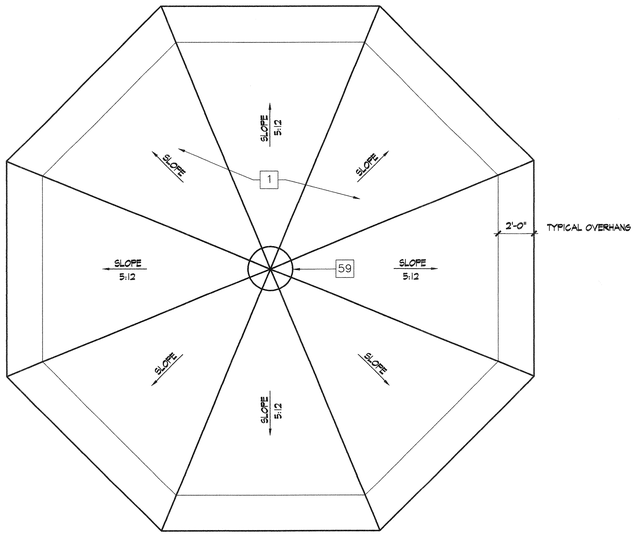

ROOF PLAN

SCALE: 1/4"=1'-0"

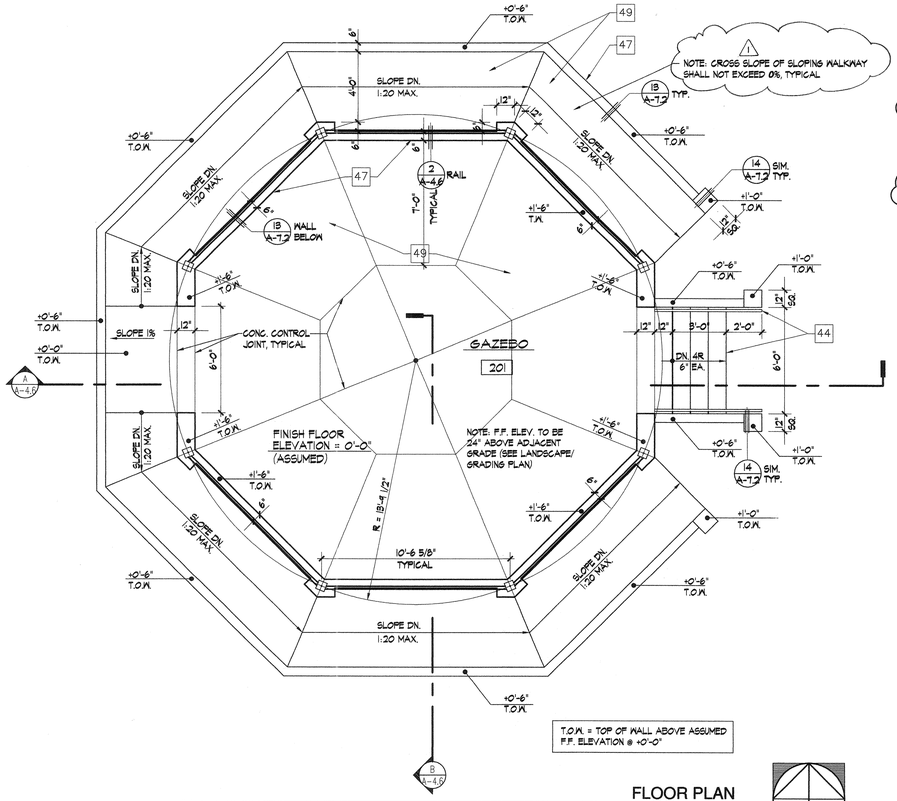

FLOOR PLAN

SCALE: 1/4"=1'-0"

KEYNOTES

1. Asphalt shingle roofing.
2. Board siding (stain finish)
3. Built-up wood header trim boards (stain finish) see detail 10/A-7.1
4. Flexi-rock plaster system
5. Windows (see schedule)
6. Cast aluminum signage/lettering (see specifications for text)
7. 6x10 outlooker beams w/ 4x4 kicker supports at dormer roofs (stain finish) see detail 14/A-7.1
8. 6x outlooker beams (stain finish)
9. Double 6x6 post(s) light sandblast/stain finish
10. 2x6 corner trim boards (medium sandblast w/ stain finish) see detail 15/A-7.1
11. Built-up roofing
12. Roof access ladder and door see detail 10/A-7.2
13. Built-up cricket, see detail 2/A-7.1
14. Drinking fountain (high/low)
15. Furniture systems panels by others (N.I.C.)
16. Laminated plastic cabinetry/ counter see interior elevations
17. Laminated plastic storage cabinets/shelves, see interior elevations
18. T-bar suspended ceiling system, by Armstrong, "bold look" white w/ 15/16 prelude, see detail 2/A-7.2
19. 5/8" gyp. board (paint finish)
20. 4" thick concrete slab with vapor barrier per soils report.
21. Double 4X10 beams (light sandblast and stain finish) See detail 11/A-7.2
22. Edge of roof
23. 1x6 T. & G. sheathing (light sandblast and stain finish)
24. Exposed framing w/ 1x6 T. & G. roof sheathing (light sandblast and stain finish)
25. Walkway Boards
26. Built-up gutter/trellis, and sign #2 and sign #3 location, see detail 17/A-7.1
27. Furniture/equipment (N.I.C.)
28. Aluminum pass-thru sliding window (see interior elevations)
29. 4" dia. G.I. down spout in wall and underground to outlet per plan
30. Roof drain and overflow, see detail 5/A-7.2
31. Built-up soffit band, see detail 5/A-4.5
32. Built-up soffit/light valance, see detail 4/A-4.4
33. Dormer framing (see roof plan and structural drawings)
34. Pre-engineered truss, see structural drawings
35. Toilet compartment partitions.
36. H.C. grab bars per T-24
37. Exposed, shaped rafter tails w/ light sandblast and stain finish
38. Mop sink w/ mop rack above.
39. 1 1/4" dia. G.I. handrail, see detail 8/A-7.1
40. 4'-0" high FRP. wainscot.
41. Draft stop per UBC.
42. Light fixture
43. Light bollard fixture, see electrical plans for fixture. See detail 14/A-7.2
44. Concrete stair w/ visual striping and handrail, see detail 8/A-7.1
45. Planting area, see landscape/irrigation drawings.
46. Gate and fence, see landscape drawings.
47. 6" thick concrete curb/wall w/ sack finish typical at all exposed faces, see paving plan, sheet A-1.3 for heights (T.O.W.=6" above F.F. unless noted otherwise) see detail 13/A-7.2
48. 12" thick concrete wall, see detail 13/A-7.2 sim. (T.O.W.=18" above fin. floor elevation)
49. 4" thick concrete slab with rock-salt finish w/ control joints @ 10'-0" o.c. and construction joints @ 20'-0" o.c. max.
50. Double 4x4 S.4.S. trellis members (stain finish) see detail 7/A-7.3
51. R-30 Batt. insulation at roof joists/trusses
52. Built-up rake fascia: 2x4 trim over 2x6 joist (stain finish)
53. 6x beam (light sandblast and stain finish)
54. Pre-fabricated/pre-engineered steel gazebo structure. Manufacturer to provide shop drawings to building department for approval
55. 5/8" plywood sheathing (paint finish)
56. 1/4" reveal/control joint, see elevations for locations, see detail 7/A-7.1
57. Fiber reinforced paneling over gyp. board.
58. 2" G.I. soffit vent (paint finish)
59. "Tapered Finial" 6' and 4' globes, 40" tall by Fisher Artworks
60. Conc. slab and/or wall see landscape drawings.

KROH/BROESKE
ARCHITECTS

6180 BROCKTON AVE.

RIVERSIDE, CA 92506

TEL 909 788-5940

FAX 909 275-0149

Park and Recreation Offices, White Park

3936 CHESTNUT ST.
RIVERSIDE, CALIFORNIA

CONSULTANTS •

NO.	DATE	REVISION
1	5-5-00	PLAN CHECK

LICENSED ARCHITECT
JAMES V. BROESKE
No. C009174
Ren 11-30-01
STATE OF CALIFORNIA

THIS DRAWING AND THE DESIGNS, ARRANGEMENTS, DEPICTIONS, IDEAS AND OTHER INFORMATION CONTAINED HEREIN CONSTITUTE UNPUBLISHED WORK OF KROH/BROESKE ARCHITECTS AND SHALL REMAIN PROPERTY OF KROH/BROESKE ARCHITECTS IN PERPETUITY. NO PART THEREOF SHALL BE REPRODUCED, COPIED, DISCLOSED, DISTRIBUTED SOLD, PUBLISHED OR OTHERWISE USED IN ANYWAY WITHOUT THE ADVANCE EXPRESS WRITTEN CONSENT OF KROH/BROESKE ARCHITECTS. VISUAL CONTACT WITH THE ABOVE DRAWINGS, OR ANY PART THEREOF, SHALL CONSTITUTE CONCLUSIVE EVIDENCE OF ACCEPTANCE OF THESE RESTRICTIONS.

SHEET TITLE •

FLOOR/ROOF PLAN
EXT. ELEVATIONS

DRAWN	• M. PRICE
CHECKED	• J. BROESKE
SCALE	• 1/4"=1'-0"
DATE	• 02-28-00
JOB	• 99008
SHEET	•

A-2.10

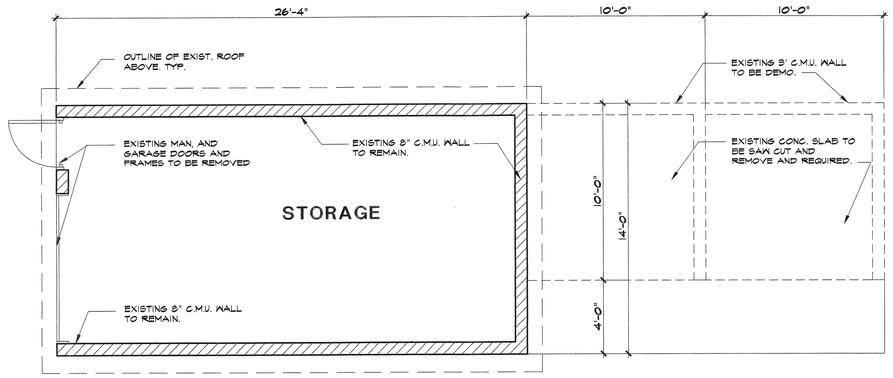

DEMOLITION PLAN

SCALE: 1/4"=1'-0"

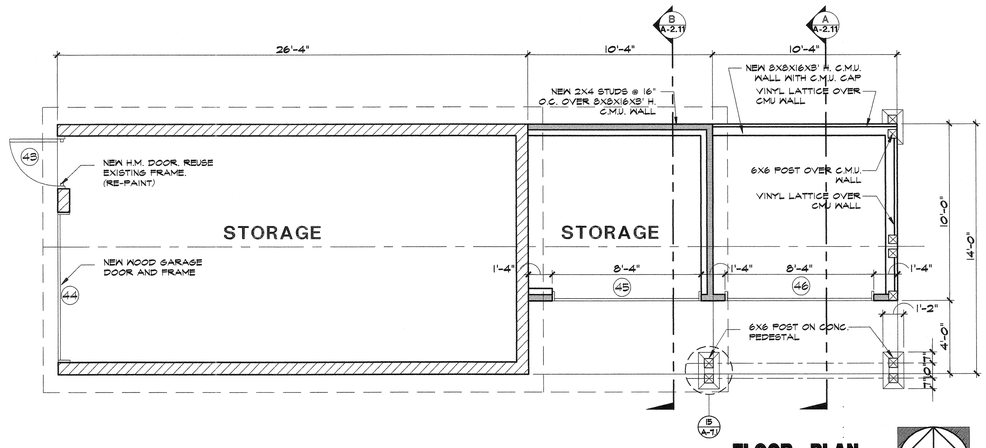

FLOOR PLAN

SCALE: 1/4"=1'-0"

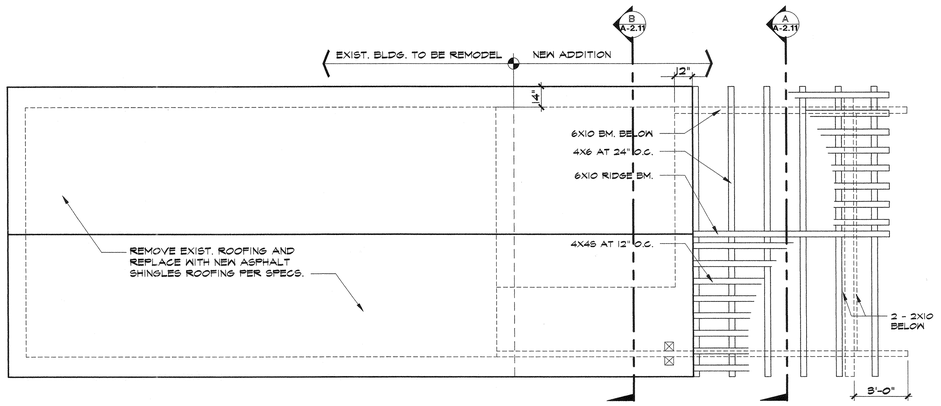

ROOF PLAN

SCALE: 1/4"=1'-0"

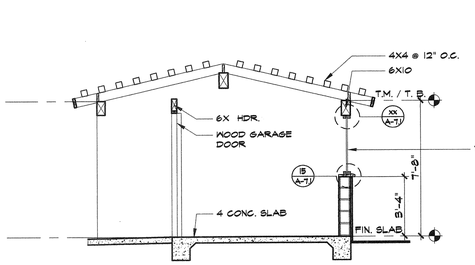

SECTION A

SCALE: 1/4"=1'-0"

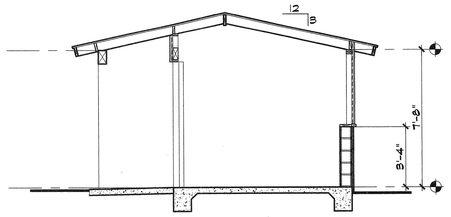

SECTION B

SCALE: 1/4"=1'-0"

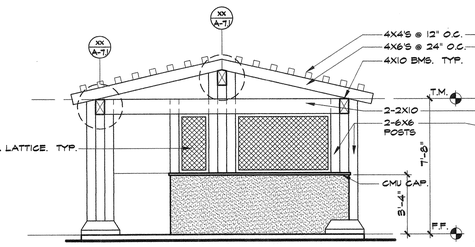

EAST ELEVATION

SCALE: 1/4"=1'-0"

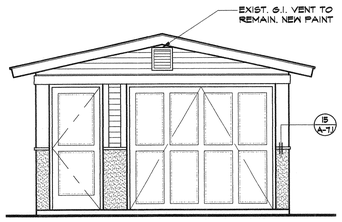

WEST ELEVATION

SCALE: 1/4"=1'-0"

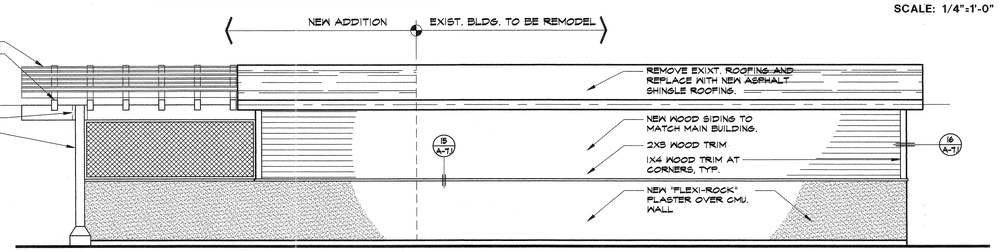

NORTH ELEVATION

SCALE: 1/4"=1'-0"

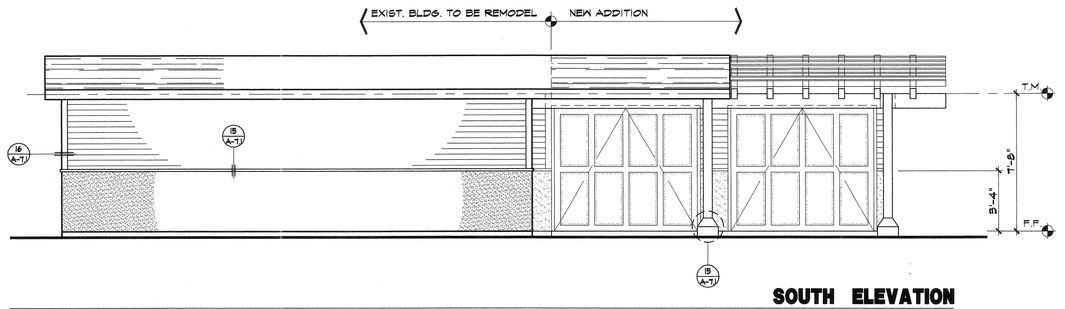

SOUTH ELEVATION

SCALE: 1/4"=1'-0"

KROH/BROESKE
ARCHITECTS
6180 BROCKTON AVE.
RIVERSIDE, CA 92506
TEL 909 788-5940
FAX 909 275-0149

Park and Recreation Offices, White Park

3936 CHESTNUT ST.
RIVERSIDE, CALIFORNIA

CONSULTANTS •

NO.	DATE	REVISION
1	5-5-00	PLAN CHECK

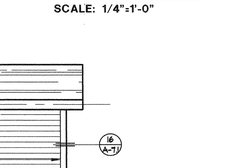

THIS DRAWING AND THE DESIGNS, ARRANGEMENTS, DEPICTIONS, IDEAS AND OTHER INFORMATION CONTAINED HEREIN CONSTITUTE UNPUBLISHED WORK BY KROH/BROESKE ARCHITECTS. ALL RIGHTS REMAIN THE PROPERTY OF KROH/BROESKE ARCHITECTS IN PERPETUITY. ANY PUBLICATION, SHALL INCLUDE COPYRIGHT NOTICE. DISTRIBUTED, SOLD, PUBLISHED, OR OTHERWISE USED IN ANYWAY WITHOUT THE ADVANCE, EXPRESS WRITTEN CONSENT OF KROH/BROESKE ARCHITECTS. VISUAL CONTACT WITH THE ABOVE DRAWINGS, OR ANY PART THEREOF, SHALL CONSTITUTE CONCLUSIVE EVIDENCE OF ACCEPTANCE OF THESE RESTRICTIONS.

SHEET TITLE •

MAINTENANCE BUILDING

DRAWN	•	
CHECKED	•	J. BROESKE
SCALE	•	1/4"=1'-0"
DATE	•	02-28-00
JOB	•	99008
SHEET	•	

A-2.11

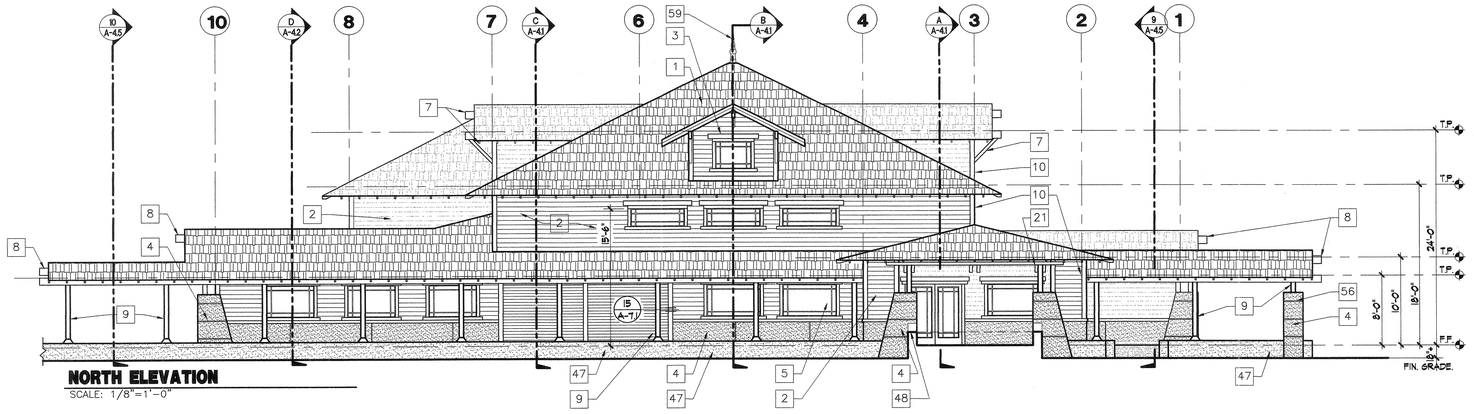

NORTH ELEVATION
SCALE: 1/8"=1'-0"

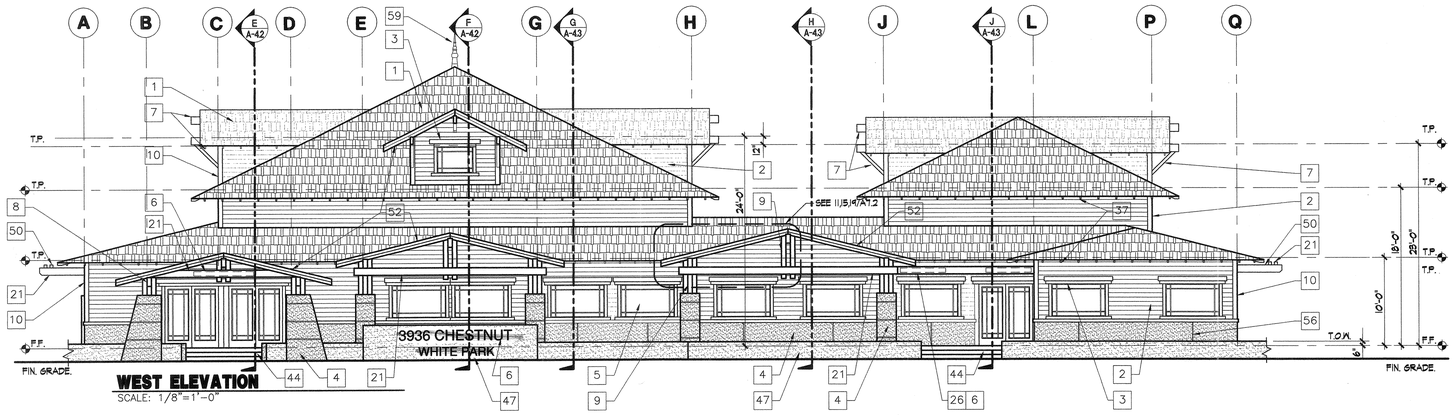

WEST ELEVATION
SCALE: 1/8"=1'-0"

SIGNS N.A.P.

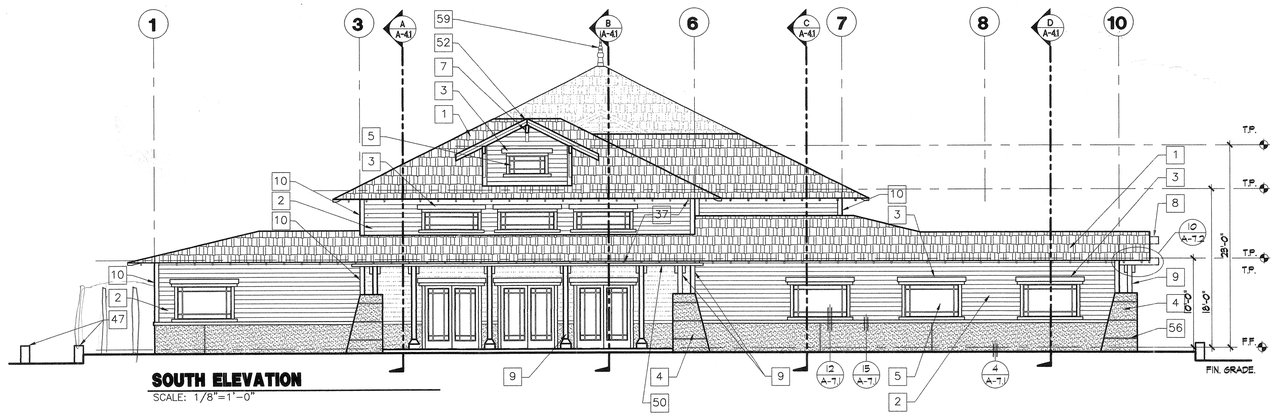

SOUTH ELEVATION
SCALE: 1/8"=1'-0"

KEYNOTES

1. Asphalt shingle roofing.
2. Board siding (stain finish)
3. Built-up wood header trim boards (stain finish) see detail 10/A-7.1
4. Flexi-rock plaster system
5. Windows (see schedule)
6. Cast aluminum signage/lettering (see specifications for text)
7. 6x10 outlooker beams w/ 4x4 kicker supports at dormer roofs (stain finish) see detail 14/A-7.1
8. 6x outlooker beams (stain finish)
9. Double 6x6 post(s) light sandblast/stain finish
10. 2x6 corner trim boards (medium sandblast w/ stain finish) see detail 15/A-7.1
11. Built-up roofing
12. Roof access ladder and door see detail 10/A-7.2
13. Built-up cricket, see detail 2/A-7.1
14. Drinking fountain (high/low)
15. Furniture systems panels by others (N.I.C.)
16. Laminated plastic cabinetry/ counter see interior elevations
17. Laminated plastic storage cabinets/shelves, see interior elevations
18. T-bar suspended ceiling system, by Armstrong, "bold lock" white w/ 15/16 prelude, see detail 2/A-7.2
19. 5/8" gyp. board (paint finish)
20. 4" thick concrete slab with vapor barrier per soils report.
21. Double 4X10 beams (light sandblast and stain finish) See detail 11/A-7.2
22. Edge of roof
23. 1x6 T. & G. sheathing (light sandblast and stain finish)
24. Exposed framing w/ 1x6 T. & G. roof sheathing (light sandblast and stain finish)
25. Walkway Boards
26. Built-up gutter/trellis, and sign #2 and sign #5 location, see detail 17/A-7.1
27. Furniture/equipment (N.I.C.)
28. Aluminum pass-thru sliding window (see interior elevations)
29. 4" dia. G.I. down spout in wall and underground to outlet per plan
30. Roof drain and overflow, see detail 3/A-7.2
31. Built-up soffit band, see detail 5/A-4.5
32. Built-up soffit/light valance, see detail 4/A-4.4
33. Dormer framing (see roof plan and structural drawings)
34. Pre-engineered truss, see structural drawings
35. Toilet compartment partitions.
36. H.C. grab bars per T-24
37. Exposed, shaped rafter tails w/ light sandblast and stain finish
38. Mop sink w/ mop rack above.
39. 1 1/4" dia. G.I. handrail, see detail 8/A-7.1
40. 4'-0" high FRP. wainscot.
41. Draft stop per UBC.
42. Light fixture
43. Light bollard fixture, see electrical plans for fixture. See detail 14/A-7.2
44. Concrete stair w/ visual striping and handrail, see detail 8/A-7.1
45. Planting area, see landscape/irrigation drawings.
46. Gate and fence, see landscape drawings.
47. 6" thick concrete curb/wall w/ sack finish typical at all exposed faces, see paving plan, sheet A-1.3 for heights (T.O.W.=6" above F.F. unless noted otherwise) see detail 13/A-7.2
48. 12" thick concrete wall, see detail 13/A-7.2 sim. (T.O.W.=+18" above fin. floor elevation)
49. 4" thick concrete slab with rock-salt finish w/ control joints @ 10'-0" o.c. and construction joints @ 20'-0" o.c. max.
50. Double 4x4 S.4.S. trellis members (stain finish) see detail 7/A-7.3
51. R-30 Batt. insulation at roof joists/trusses
52. Built-up rake fascia: 2x4 trim over 2x6 joist (stain finish)
53. 6x beam (light sandblast and stain finish)
54. Pre-fabricated/pre-engineered steel gazebo structure. Manufacturer to provide shop drawings to building department for approval
55. 5/8" plywood sheathing (paint finish)
56. 1/4" reveal/control joint, see elevations for locations, see detail 7/A-7.1
57. Fiber reinforced paneling over gyp. board.
58. 2" G.I. soffit vent (paint finish)
59. "Tapered Finial" 6" and 4" globes, 40" tall by Fisher Artworks
60. Conc. slab and/or wall see landscape drawings.

KROH/BROESKE
ARCHITECTS
6180 BROCKTON AVE.
RIVERSIDE, CA 92506
TEL 909 788-5940
FAX 909 275-0149

Park and Recreation Offices, White Park
3936 CHESTNUT ST.
RIVERSIDE, CALIFORNIA

CONSULTANTS •

NO.	DATE	REVISION
1	5-5-00	PLAN CHECK

LICENSED ARCHITECT JAMES L. BROESKE C009174 Ren 11-30-01 STATE OF CALIFORNIA

THIS DRAWING AND THE DESIGNS, ARRANGEMENTS, DEPICTIONS, IDEAS AND OTHER INFORMATION CONTAINED HEREIN CONSTITUTE UNPUBLISHED WORK OF KROH/BROESKE ARCHITECTS AND SHALL REMAIN PROPERTY OF KROH/BROESKE ARCHITECTS IN PERPETUITY. NO PART THEREOF SHALL BE REPRODUCED, COPIED, DISCLOSED, DISTRIBUTED/SOLD, PUBLISHED OR OTHERWISE USED IN ANYWAY WITHOUT THE ADVANCE, EXPRESS WRITTEN CONSENT OF KROH/BROESKE ARCHITECTS. ANY UNAUTHORIZED CONTACT WITH THE ABOVE DRAWINGS, OR ANY PART THEREOF, SHALL CONSTITUTE CONCLUSIVE EVIDENCE OF ACCEPTANCE OF THESE RESTRICTIONS.

SHEET TITLE •

EXTERIOR ELEVATIONS

DRAWN	•	M. PRICE
CHECKED	•	J. BROESKE
SCALE	•	1/8"=1'-0"
DATE	•	2-28-00
JOB	•	99008
SHEET	•	

A-3.1

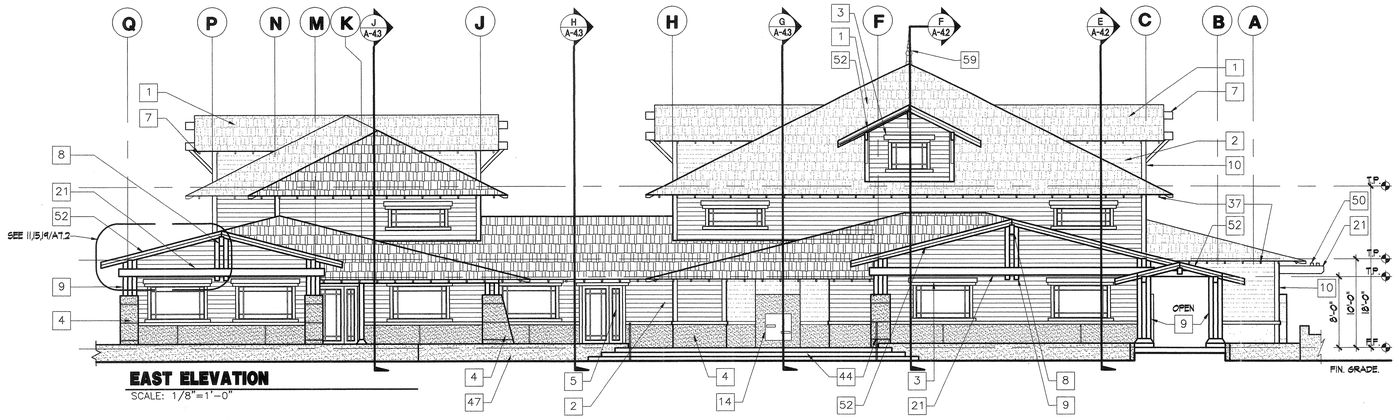

EAST ELEVATION
SCALE: 1/8"=1'-0"

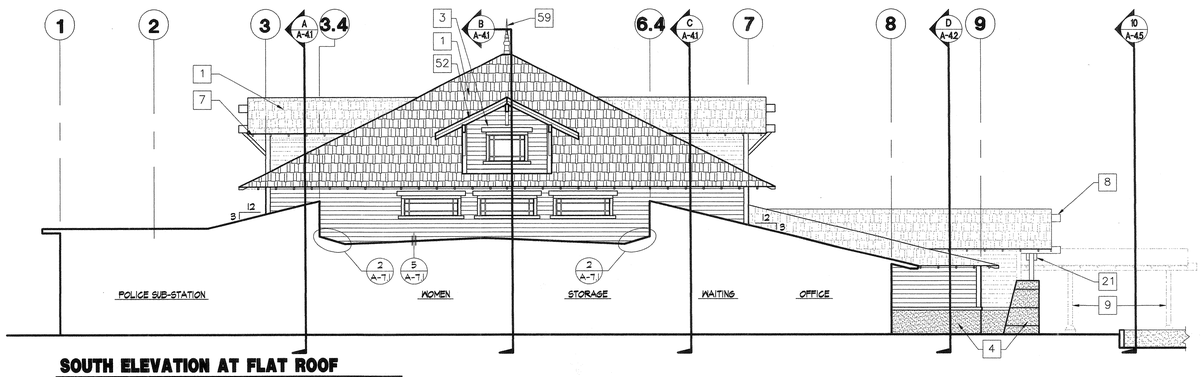

SOUTH ELEVATION AT FLAT ROOF
SCALE: 1/8"=1'-0"

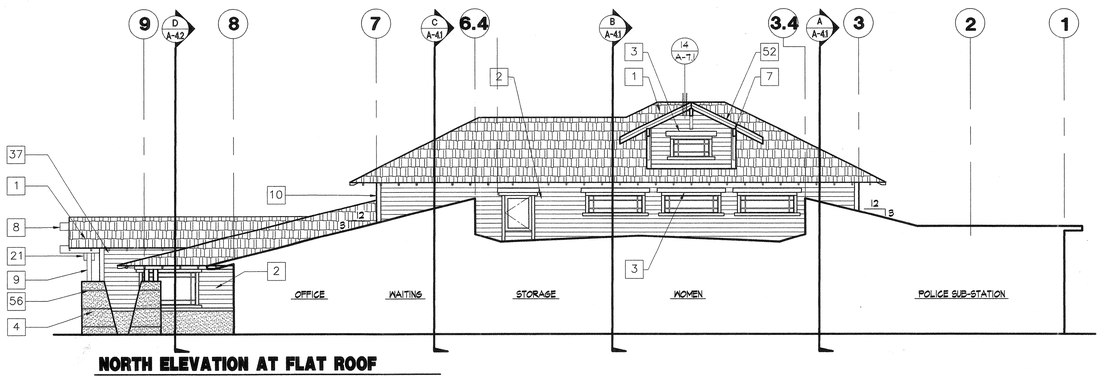

NORTH ELEVATION AT FLAT ROOF
SCALE: 1/8"=1'-0"

KEYNOTES

1. Asphalt shingle roofing.
2. Board siding (stain finish)
3. Built-up wood header trim boards (stain finish) see detail 10/A-7.1
4. Flexi-rock plaster system
5. Windows (see schedule)
6. Cast aluminum signage/lettering (see specifications for text)
7. 6x10 outlooker beams w/ 4x4 kicker supports at dormer roofs (stain finish) see detail 14/A-7.1
8. 6x outlooker beams (stain finish)
9. Double 6x6 post(s) light sandblast/stain finish
10. 2x6 corner trim boards (medium sandblast w/ stain finish) see detail 15/A-7.1
11. Built-up roofing
12. Roof access ladder and door see detail 10/A-7.2
13. Built-up cricket, see detail 2/A-7.1
14. Drinking fountain (high/low)
15. Furniture systems panels by others (N.I.C.)
16. Laminated plastic cabinetry/ counter see interior elevations
17. Laminated plastic storage cabinets/shelves, see interior elevations
18. T-bar suspended ceiling system, by Armstrong, "bold look" white w/ 15/16 prelude, see detail 2/A-7.2
19. 5/8" gyp. board (paint finish)
20. 4" thick concrete slab with vapor barrier per soils report.
21. Double 4X10 beams (light sandblast and stain finish) See detail 11/A-7.2
22. Edge of roof
23. 1x6 T. & G. sheathing (light sandblast and stain finish)
24. Exposed framing w/ 1x6 T. & G. roof sheathing (light sandblast and stain finish)
25. Walkway Boards
26. Built-up gutter/trellis, and sign #2 and sign #5 location, see detail 17/A-7.1
27. Furniture/equipment (N.I.C.)
28. Aluminum pass-thru sliding window (see interior elevations)
29. 4" dia. G.I. down spout in wall and underground to outlet per plan
30. Roof drain and overflow, see detail 3/A-7.2
31. Built-up soffit band, see detail 5/A-4.5
32. Built-up soffit/light valance, see detail 4/A-4.4
33. Dormer framing (see roof plan and structural drawings)
34. Pre-engineered truss, see structural drawings
35. Toilet compartment partitions.
36. H.C. grab bars per T-24
37. Exposed, shaped rafter tails w/ light sandblast and stain finish
38. Mop sink w/ mop rack above.
39. 1 1/4" dia. G.I. handrail, see detail 8/A-7.1
40. 4'-0" high FRP. wainscot.
41. Draft stop per UBC.
42. Light fixture
43. Light bollard fixture, see electrical plans for fixture. See detail 14/A-7.2
44. Concrete stair w/ visual striping and handrail, see detail 8/A-7.1
45. Planting area, see landscape/irrigation drawings.
46. Gate and fence, see landscape drawings.
47. 6" thick concrete curb/wall w/ sack finish typical at all exposed faces, see paving plan, sheet A-1.3 for heights (T.O.W.=6" above F.F. unless noted otherwise) see detail 13/A-7.2
48. 12" thick concrete wall, see detail 13/A-7.2 sim. (T.O.W.=18" above fin. floor elevation)
49. 4" thick concrete slab with rock-salt finish w/ control joints @ 10'-0" o.c. and construction joints @ 20'-0" o.c. max.
50. Double 4x4 S.4.S. trellis members (stain finish) see detail 7/A-7.3
51. R-30 Batt. insulation at roof joists/trusses
52. Built-up rake fascia: 2x4 trim over 2x6 joist (stain finish)
53. 6x beam (light sandblast and stain finish)
54. Pre-fabricated/pre-engineered steel gazebo structure. Manufacturer to provide shop drawings to building department for approval
55. 5/8" plywood sheathing (paint finish)
56. 1/4" reveal/control joint, see elevations for locations, see detail 7/A-7.1
57. Fiber reinforced paneling over gyp. board.
58. 2" G.I. soffit vent (paint finish)
59. "Tapered Finial" 6" and 4" globes, 40" tall by Fisher Artworks
60. Conc. slab and/or wall see landscape drawings.

KROH/BROESKE
ARCHITECTS
6180 BROCKTON AVE.
RIVERSIDE, CA 92506
TEL 909 788-5940
FAX 909 275-0149

Park and Recreation Offices, White Park
3936 CHESTNUT ST.
RIVERSIDE, CALIFORNIA

CONSULTANTS •

NO.	DATE	REVISION
1	5-5-00	PLAN CHECK

LICENSED ARCHITECT JAMES L. BROESKE C009174 Ren 11-30-01 STATE OF CALIFORNIA

THIS DRAWING AND THE DESIGNS, ARRANGEMENTS, DEPICTIONS, IDEAS AND OTHER INFORMATION CONTAINED HEREIN CONSTITUTE UNPUBLISHED WORK OF KROH/BROESKE ARCHITECTS AND SHALL REMAIN PROPERTY OF KROH/BROESKE ARCHITECTS IN PERPETUITY. NO PART THEREOF SHALL BE REPRODUCED, PUBLISHED, DISTRIBUTED, SOLD, PUBLICLY DISPLAYED OR OTHERWISE USED IN ANYWAY WITHOUT THE EXPRESS WRITTEN CONSENT OF KROH/BROESKE ARCHITECTS. VISUAL CONTACT WITH THE ABOVE DRAWINGS, OR ANY PART THEREOF, SHALL CONSTITUTE CONCLUSIVE EVIDENCE OF ACCEPTANCE OF THESE RESTRICTIONS.

SHEET TITLE •

EXTERIOR ELEVATIONS

DRAWN	•	M. PRICE
CHECKED	•	J. BROESKE
SCALE	•	1/8"=1'-0"
DATE	•	2-28-00
JOB	•	99008
SHEET	•	

A-3.2

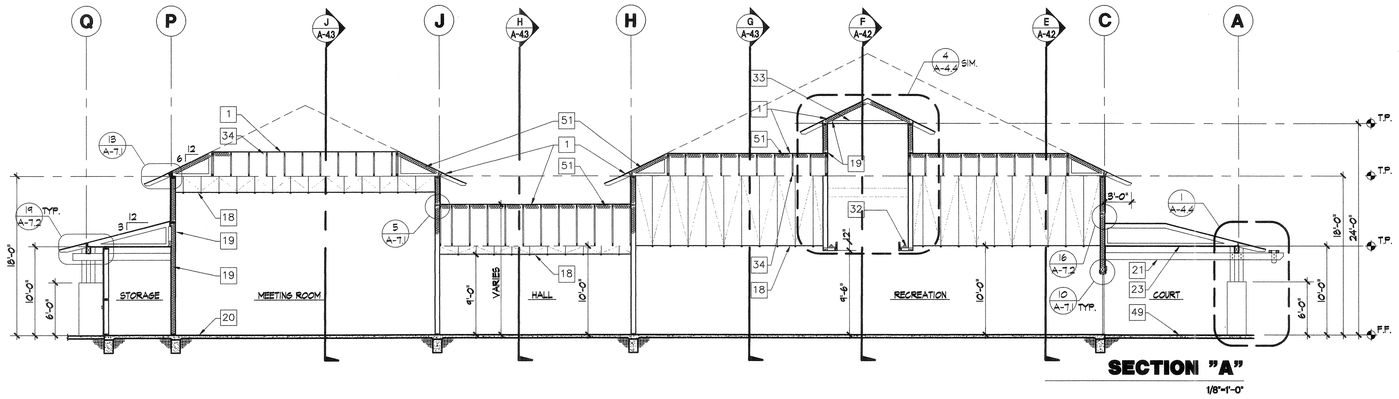

SECTION "A"
1/8"=1'-0"

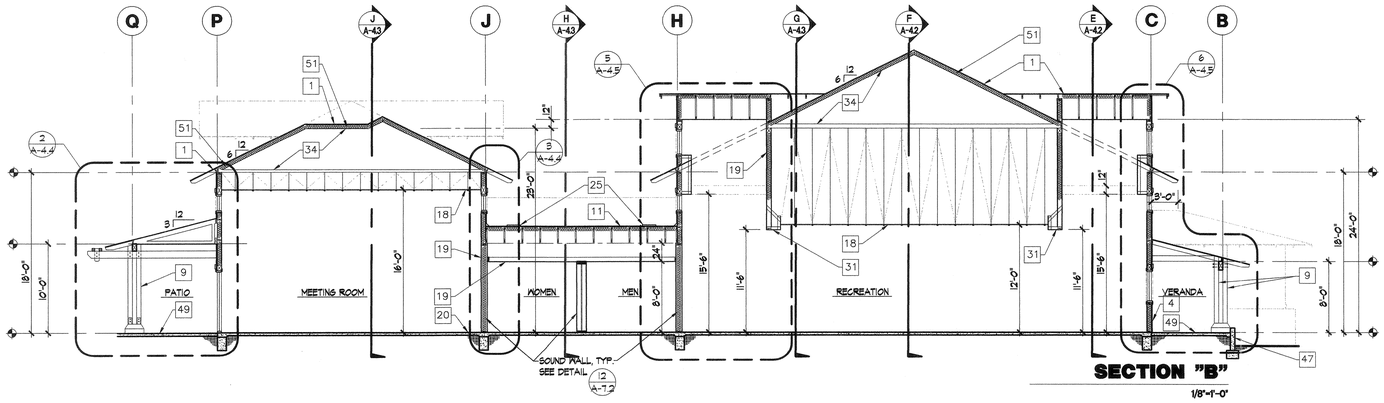

SECTION "B"
1/8"=1'-0"

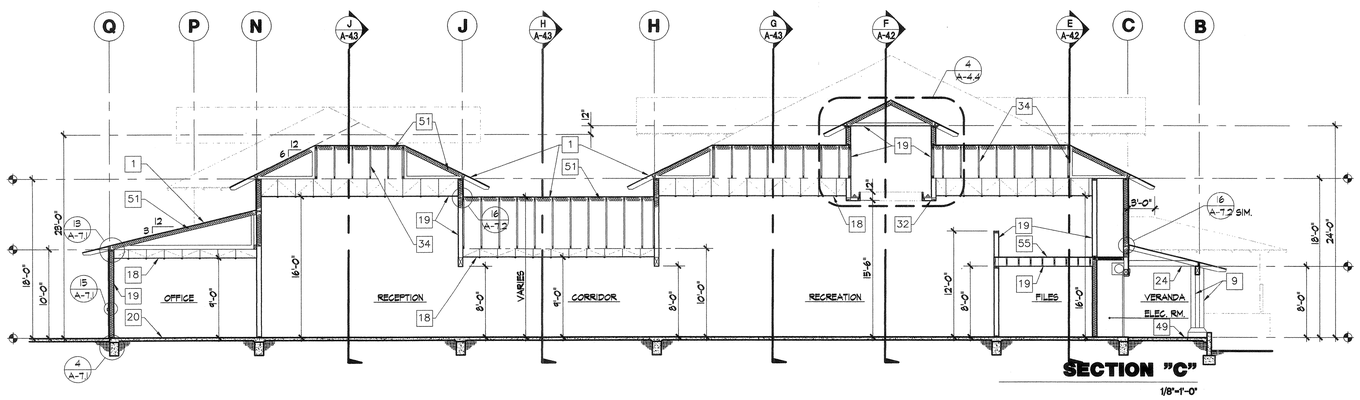

SECTION "C"
1/8"=1'-0"

KEYNOTES

1. Asphalt shingle roofing
2. Board siding (stain finish)
3. Built-up wood header trim boards (stain finish) see detail 10/A-7.1
4. Flexi-rock plaster system
5. Windows (see schedule)
6. Cast aluminum signage/lettering (see specifications for text)
7. 6x10 outlooker beams w/ 4x4 kicker supports at dormer roofs (stain finish) see detail 14/A-7.1
8. 6x outlooker beams (stain finish)
9. Double 6x6 post(s) light sandblast/stain finish
10. 2x6 corner trim boards (medium sandblast w/ stain finish) see detail 15/A-7.1
11. Built-up roofing
12. Roof access ladder and door see detail 10/A-7.2
13. Built-up cricket, see detail 2/A-7.1
14. Drinking fountain (high/low)
15. Furniture systems panels by others (N.I.C.)
16. Laminated plastic cabinetry/ counter see interior elevations
17. Laminated plastic storage cabinets/shelves, see interior elevations
18. T-bar suspended ceiling system, by Armstrong, "bold look" white w/ 15/16 prelude, see detail 2/A-7.2
19. 5/8" gyp. board (paint finish)
20. 4" thick concrete slab with vapor barrier per soils report.
21. Double 4X10 beams (light sandblast and stain finish) See detail 11/A-7.2
22. Edge of roof
23. 1x6 T. & G. sheathing (light sandblast and stain finish)
24. Exposed framing w/ 1x6 T. & G. roof sheathing (light sandblast and stain finish)
25. Walkway Boards
26. Built-up gutter/trellis, and sign #2 and sign #3 location, see detail 17/A-7.1
27. Furniture/equipment (N.I.C.)
28. Aluminum pass-thru sliding window (see interior elevations)
29. 4" dia. G.I. down spout in wall and underground to outlet per plan
30. Roof drain and overflow, see detail 3/A-7.2
31. Built-up soffit band, see detail 5/A-4.5
32. Built-up soffit/light valance, see detail 4/A-4.4
33. Dormer framing (see roof plan and structural drawings)
34. Pre-engineered truss, see structural drawings
35. Toilet compartment partitions.
36. H.C. grab bars per T-24
37. Exposed, shaped rafter tails w/ light sandblast and stain finish
38. Mop sink w/ mop rack above.
39. 1 1/4" dia. G.I. handrail, see detail 8/A-7.1
40. 4'-0" high FRP. mainscot.
41. Draft stop per UBC.
42. Light fixture
43. Light ballard fixture, see electrical plans for fixture. See detail 14/A-7.2
44. Concrete stair w/ visual striping and handrail, see detail 8/A-7.1
45. Planting area, see landscape/irrigation drawings.
46. Gate and fence, see landscape drawings.
47. 6" thick concrete curb/wall w/ sack finish typical at all exposed faces, see paving plan, sheet A-1.3 for heights (T.O.W.=6" above F.F. unless noted otherwise) see detail 13/A-7.2
48. 12" thick concrete wall, see detail 13/A-7.2 sim. (T.O.W.=18" above fin. floor elevation)
49. 4" thick concrete slab with rock-salt finish w/ control joints @ 10'-0" o.c. and construction joints @ 20'-0" o.c. max.
50. Double 4x4 S.4.S. trellis members (stain finish) see detail 7/A-7.3
51. R-30 Batt. insulation at roof joists/trusses
52. Built-up rake fascia: 2x4 trim over 2x6 joist (stain finish)
53. 6x beam (light sandblast and stain finish)
54. Pre-fabricated/pre-engineered steel gazebo structure. Manufacturer to provide shop drawings to building department for approval
55. 5/8" plywood sheathing (paint finish)
56. 1/4" reveal/control joint, see elevations for locations, see detail 7/A-7.1
57. Fiber reinforced paneling over gyp. board.
58. 2" G.I. soffit vent (paint finish)
59. "Tapered Finial" 6" and 4" globes, 40" tall by Fisher Artworks
60. Conc. slab and/or wall see landscape drawings.

KROH/BROESKE
ARCHITECTS

6180 BROCKTON AVE.

RIVERSIDE, CA 92506

TEL 909 788-5940

FAX 909 275-0149

Park and Recreation Offices, White Park

3936 CHESTNUT ST.
RIVERSIDE, CALIFORNIA

CONSULTANTS •

NO.	DATE	REVISION
1	5-5-00	PLAN CHECK

LICENSED ARCHITECT
JAMES V. BROESKE
No. C009174
Ren 11-30-01
STATE OF CALIF.

THIS DRAWING AND THE DESIGNS, ARRANGEMENTS, DEPICTIONS, IDEAS AND OTHER INFORMATION CONTAINED HEREIN CONSTITUTE UNPUBLISHED WORK OF KROH/BROESKE ARCHITECTS AND SHALL REMAIN PROPERTY OF KROH/BROESKE ARCHITECTS IN PERPETUITY. NO PART THEREOF SHALL BE REPRODUCED, COPIED, DISCLOSED, DISTRIBUTED, SOLD, PUBLISHED OR OTHERWISE USED IN ANYWAY WITHOUT THE ADVANCE EXPRESS WRITTEN CONSENT OF KROH/BROESKE ARCHITECTS. VISUAL CONTACT WITH THE ABOVE DRAWINGS, OR ANY PART THEREOF, SHALL CONSTITUTE CONCLUSIVE EVIDENCE OF ACCEPTANCE OF THESE RESTRICTIONS.

SHEET TITLE •

SECTIONS

DRAWN	•	M. PRICE
CHECKED	•	J. BROESKE
SCALE	•	1/8"=1'-0"
DATE	•	2-28-00
JOB	•	99008
SHEET	•	

A-4.1

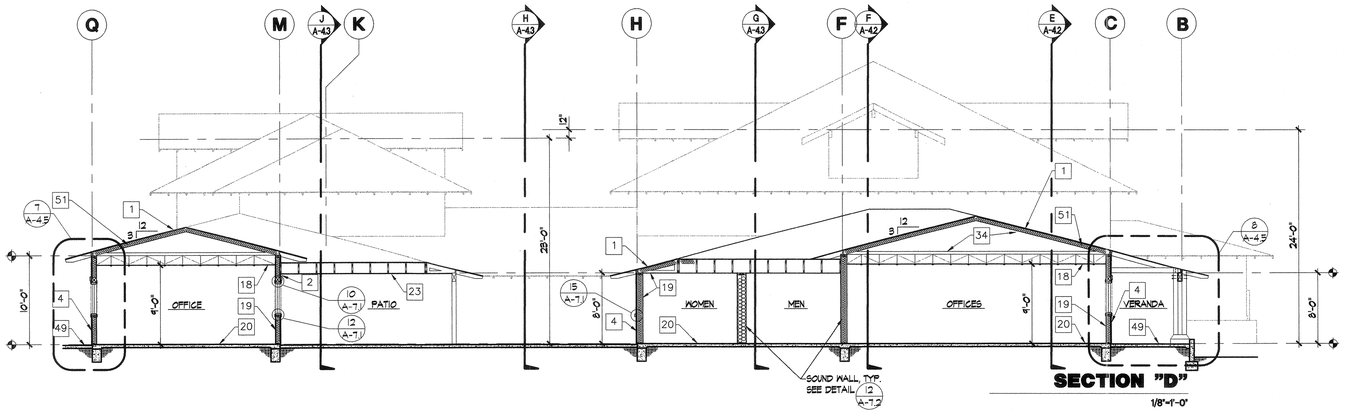

SECTION "D"

1/8"=1'-0"

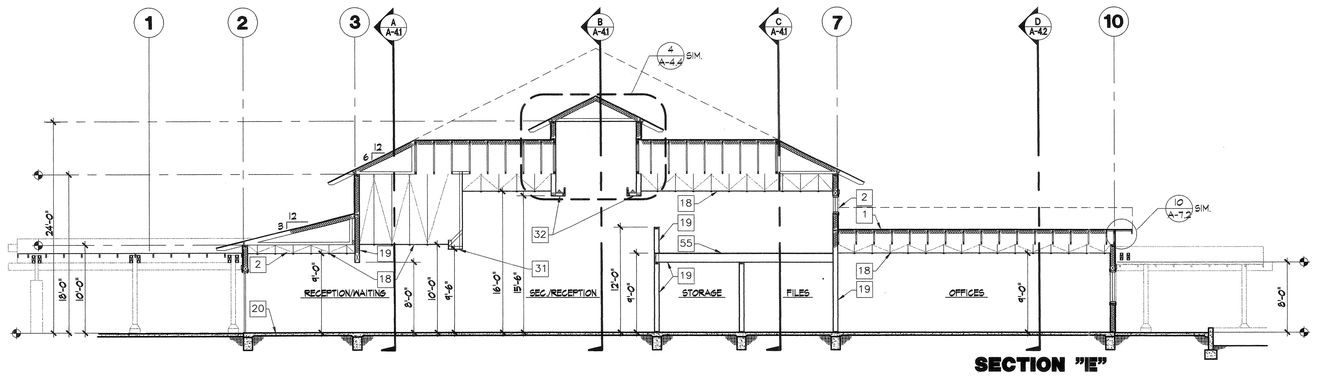

SECTION "E"

1/8"=1'-0"

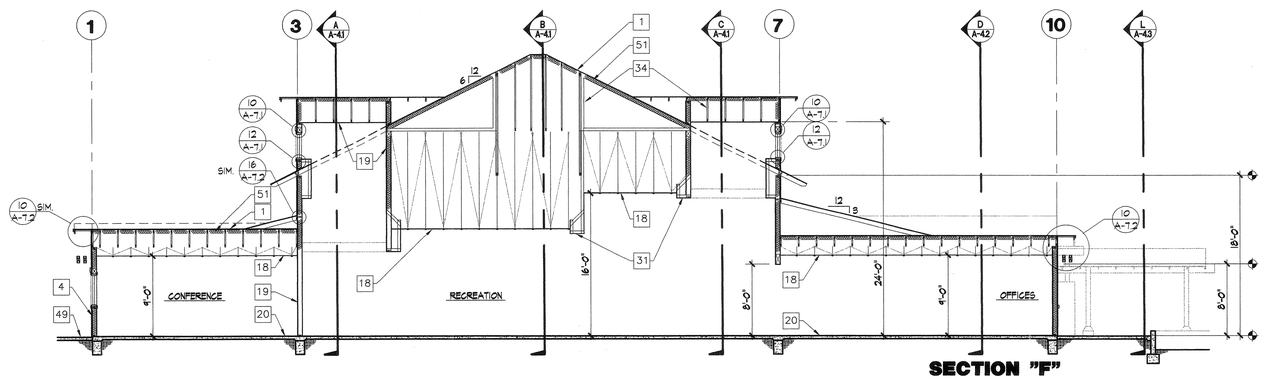

SECTION "F"

1/8"=1'-0"

KEYNOTES

1. Asphalt shingle roofing
2. Board siding (stain finish)
3. Built-up wood header trim boards (stain finish) see detail 10/A-7.1
4. Flexi-rock plaster system
5. Windows (see schedule)
6. Cast aluminum signage/lettering (see specifications for text)
7. 6x10 outlooker beams w/ 4x4 kicker supports at dormer roofs (stain finish) see detail 14/A-7.1
8. 6x outlooker beams (stain finish)
9. Double 6x6 post(s) light sandblast/stain finish
10. 2x6 corner trim boards (medium sandblast w/ stain finish) see detail 15/A-7.1
11. Built-up roofing
12. Roof access ladder and door see detail 10/A-7.2
13. Built-up cricket, see detail 2/A-7.1
14. Drinking fountain (high/low)
15. Furniture systems panels by others (N.I.C.)
16. Laminated plastic cabinetry/ counter see interior elevations
17. Laminated plastic storage cabinets/shelves, see interior elevations
18. T-bar suspended ceiling system, by Armstrong, "bold look" white w/ 15/16 prelude, see detail 2/A-7.2
19. 5/8" gyp. board (paint finish)
20. 4" thick concrete slab with vapor barrier per soils report.
21. Double 4X10 beams (light sandblast and stain finish) See detail 11/A-7.2
22. Edge of roof
23. 1x6 T. & G. sheathing (light sandblast and stain finish)
24. Exposed framing w/ 1x6 T. & G. roof sheathing (light sandblast and stain finish)
25. Walkway Boards
26. Built-up gutter/trellis, and sign #2 and sign #3 location, see detail 17/A-7.1
27. Furniture/equipment (N.I.C.)
28. Aluminum pass-thru sliding window (see interior elevations)
29. 4" dia. G.I. down spout in wall and underground to outlet per plan
30. Roof drain and overflow, see detail 3/A-7.2
31. Built-up soffit band, see detail 5/A-4.5
32. Built-up soffit/light valance, see detail 4/A-4.4
33. Dormer framing (see roof plan and structural drawings)
34. Pre-engineered truss, see structural drawings
35. Toilet compartment partitions.
36. H.C. grab bars per T-24
37. Exposed, shaped rafter tails w/ light sandblast and stain finish
38. Mop sink w/ mop rack above.
39. 1 1/4" dia. G.I. handrail, see detail 8/A-7.1
40. 4'-0" high FRP. wainscot.
41. Draft stop per UBC.
42. Light fixture
43. Light bollard fixture, see electrical plans for fixture. See detail 14/A-7.2
44. Concrete stair w/ visual striping and handrail, see detail 8/A-7.1
45. Planting area, see landscape/irrigation drawings.
46. Gate and fence, see landscape drawings.
47. 6" thick concrete curb/wall w/ sack finish typical at all exposed faces, see paving plan, sheet A-1.3 for heights (T.O.W.=6" above F.F. unless noted otherwise) see detail 13/A-7.2
48. 12" thick concrete wall, see detail 13/A-7.2 sim. (T.O.W.=18" above fin. floor elevation)
49. 4" thick concrete slab with rock-salt finish w/ control joints @ 10'-0" o.c. and construction joints @ 20'-0" o.c. max.
50. Double 4x4 S.4.S. trellis members (stain finish) see detail 7/A-7.3
51. R-30 Batt. insulation at roof joists/trusses
52. Built-up rake fascia: 2x4 trim over 2x6 joist (stain finish)
53. 6x beam (light sandblast and stain finish)
54. Pre-fabricated/pre-engineered steel gazebo structure. Manufacturer to provide shop drawings to building department for approval
55. 5/8" plywood sheathing (paint finish)
56. 1/4" reveal/control joint, see elevations for locations, see detail 7/A-7.1
57. Fiber reinforced paneling over gyp. board.
58. 2" G.I. soffit vent (paint finish)
59. "Tapered Finial" 6" and 4" globes, 40" tall by Fisher Artworks
60. Conc. slab and/or wall see landscape drawings.

KROH/BROESKE
ARCHITECTS

6180 BROCKTON AVE.

RIVERSIDE, CA 92506

TEL 909 788-5940

FAX 909 275-0149

Park and Recreation Offices, White Park

3936 CHESTNUT ST.
RIVERSIDE, CALIFORNIA

CONSULTANTS •

NO.	DATE	REVISION
1	5-5-00	PLAN CHECK

LICENSED ARCHITECT
JAMES L. BROESKE
No. C009174
Ren 11-30-01
STATE OF CALIFORNIA

THIS DRAWING AND THE DESIGNS, ARRANGEMENTS, DEPICTIONS, IDEAS AND OTHER INFORMATION CONTAINED HEREIN CONSTITUTE UNPUBLISHED WORK OF KROH/BROESKE ARCHITECTS AND SHALL REMAIN PROPERTY OF KROH/BROESKE ARCHITECTS IN PERPETUITY. NO PART THEREOF SHALL BE REPRODUCED, COPIED, DISCLOSED, DISTRIBUTED,SOLD, PUBLISHED OR OTHERWISE USED IN ANY MANNER WITHOUT THE ADVANCE EXPRESS WRITTEN CONSENT OF KROH/BROESKE ARCHITECTS. ANY USE, CONTACT WITH THE ABOVE DRAWINGS, OR ANY PART THEREOF, SHALL CONSTITUTE CONCLUSIVE EVIDENCE OF ACCEPTANCE OF THESE RESTRICTIONS.

SHEET TITLE •

SECTIONS

DRAWN	•	M. PRICE
CHECKED	•	J. BROESKE
SCALE	•	1/8"=1'-0"
DATE	•	2-28-00
JOB	•	99008
SHEET	•	

A-4.2

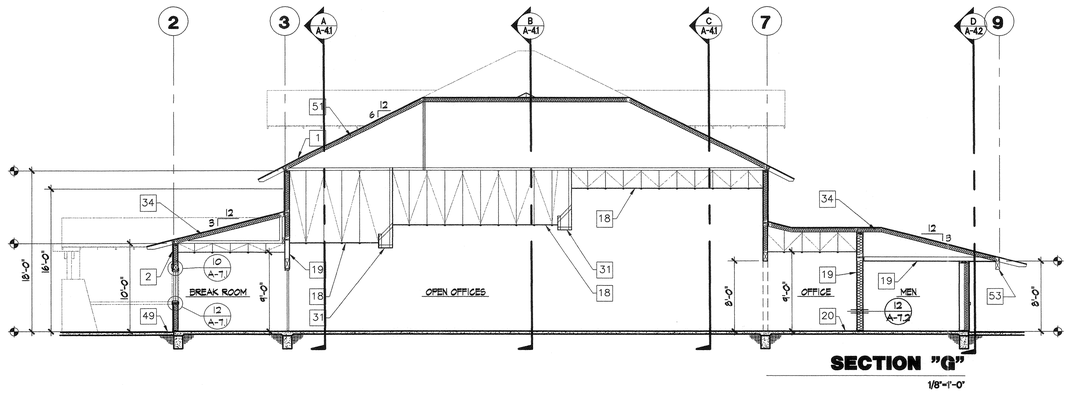

SECTION "G"

1/8"=1'-0"

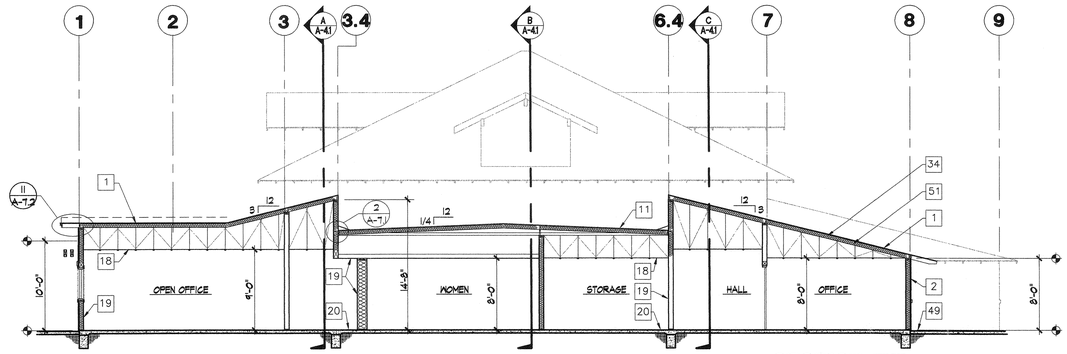

SECTION "H"

1/8"=1'-0"

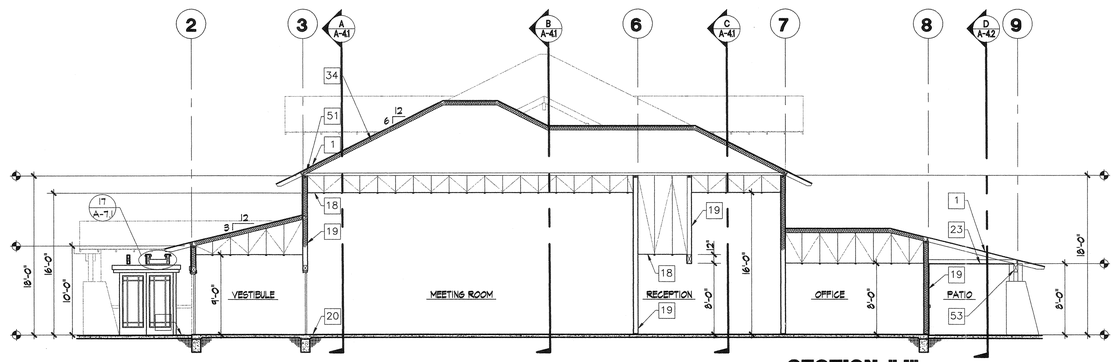

SECTION "J"

1/8"=1'-0"

KEYNOTES

1. Asphalt shingle roofing.
2. Board siding (stain finish)
3. Built-up wood header trim boards (stain finish) see detail 10/A-7.1
4. Flexi-rock plaster system
5. Windows (see schedule)
6. Cast aluminum signage/lettering (see specifications for text)
7. 6x10 outlooker beams w/ 4x4 kicker supports at dormer roofs (stain finish) see detail 14/A-7.1
8. 6x outlooker beams (stain finish)
9. Double 6x6 post(s) light sandblast/stain finish
10. 2x6 corner trim boards (medium sandblast w/ stain finish) see detail 15/A-7.1
11. Built-up roofing
12. Roof access ladder and door see detail 10/A-7.2
13. Built-up cricket, see detail 2/A-7.1
14. Drinking fountain (high/low)
15. Furniture systems panels by others (N.I.C.)
16. Laminated plastic cabinetry/ counter see interior elevations
17. Laminated plastic storage cabinets/shelves, see interior elevations
18. T-bar suspended ceiling system, by Armstrong, "bold lock" white w/ 15/16 prelude, see detail 2/A-7.2
19. 5/8" gyp. board (paint finish)
20. 4" thick concrete slab with vapor barrier per soils report.
21. Double 4X10 beams (light sandblast and stain finish) See detail 11/A-7.2
22. Edge of roof
23. 1x6 T. & G. sheathing (light sandblast and stain finish)
24. Exposed framing w/ 1x6 T. & G. roof sheathing (light sandblast and stain finish)
25. Walkway Boards
26. Built-up gutter/trellis, and sign #2 and sign #3 location, see detail 17/A-7.1
27. Furniture/equipment (N.I.C.)
28. Aluminum pass-thru sliding window (see interior elevations)
29. 4" dia. G.I. down spout in wall and underground to outlet per plan
30. Roof drain and overflow, see detail 3/A-7.2
31. Built-up soffit band, see detail 5/A-4.5
32. Built-up soffit/light valance, see detail 4/A-4.4
33. Dormer framing (see roof plan and structural drawings)
34. Pre-engineered truss, see structural drawings
35. Toilet compartment partitions.
36. H.C. grab bars per T-24
37. Exposed, shaped rafter tails w/ light sandblast and stain finish
38. Mop sink w/ mop rack above.
39. 1 1/4" dia. G.I. handrail, see detail 8/A-7.1
40. 4'-0" high FRP. wainscot.
41. Draft stop per UBC.
42. Light fixture
43. Light bollard fixture, see electrical plans for fixture. See detail 14/A-7.2
44. Concrete stair w/ visual striping and handrail, see detail 8/A-7.1
45. Planting area, see landscape/irrigation drawings.
46. Gate and fence, see landscape drawings.
47. 6" thick concrete curb/wall w/ sack finish typical at all exposed faces, see paving plan, sheet A-1.3 for heights (T.O.W.=6" above F.F. unless noted otherwise) see detail 13/A-7.2
48. 12" thick concrete wall, see detail 13/A-7.2 sim. (T.O.W.=18" above fin. floor elevation)
49. 4" thick concrete slab with rock-salt finish w/ control joints @ 10'-0" o.c. and construction joints @ 20'-0" o.c. max.
50. Double 4x4 S.4.S. trellis members (stain finish) see detail 7/A-7.3
51. R-30 Batt. insulation at roof joists/trusses
52. Built-up rake fascia: 2x4 trim over 2x6 joist (stain finish)
53. 6x beam (light sandblast and stain finish)
54. Pre-fabricated/pre-engineered steel gazebo structure. Manufacturer to provide shop drawings to building department for approval
55. 5/8" plywood sheathing (paint finish)
56. 1/4" reveal/control joint, see elevations for locations, see detail 7/A-7.1
57. Fiber reinforced paneling over gyp. board.
58. 2" G.I. soffit vent (paint finish)
59. "Tapered Finial" 6" and 4" globes, 40" tall by Fisher Artworks
60. Conc. slab and/or wall see landscape drawings.

KROH/BROESKE
ARCHITECTS

6180 BROCKTON AVE.
RIVERSIDE, CA 92506
TEL 909 788-5940
FAX 909 275-0149

Park and Recreation Offices, White Park

3936 CHESTNUT ST.
RIVERSIDE, CALIFORNIA

CONSULTANTS •

NO.	DATE	REVISION
1	5-5-00	PLAN CHECK

LICENSED ARCHITECTS
JAMES L. BROESKE
No. C009174
Ren (1-30-01
STATE OF CALIFORNIA

THIS DRAWING AND THE DESIGNS, IDEAS, CONCEPTIONS, IDEAS AND OTHER INFORMATION CONTAINED HEREIN CONSTITUTE UNPUBLISHED WORK OF KROH/BROESKE ARCHITECTS AND SHALL REMAIN PROPERTY OF KROH/BROESKE ARCHITECTS IN PERPETUITY. NO PART THEREOF SHALL BE REPRODUCED, COPIED, DISCLOSED, DISTRIBUTED/SOLD, PUBLISHED OR OTHERWISE USED IN ANYWAY WITHOUT THE ADVANCE EXPRESS WRITTEN CONSENT OF KROH/BROESKE ARCHITECTS. VISUAL CONTACT WITH THE ABOVE DRAWINGS, OR ANY PART THEREOF, SHALL CONSTITUTE CONCLUSIVE EVIDENCE OF ACCEPTANCE OF THESE RESTRICTIONS.

SHEET TITLE •

SECTIONS

DRAWN	•	M. PRICE
CHECKED	•	J. BROESKE
SCALE	•	1/8"=1'-0"
DATE	•	2-28-00
JOB	•	99008
SHEET	•	

A-4.3

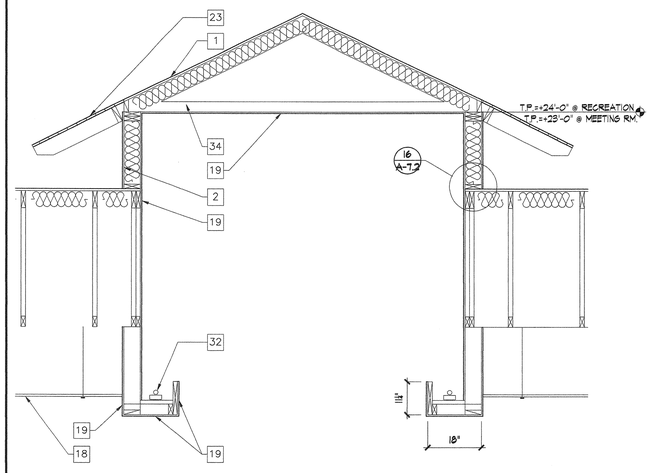

ENLARGED SECTION

SCALE 1/2"=1'-0" | 4

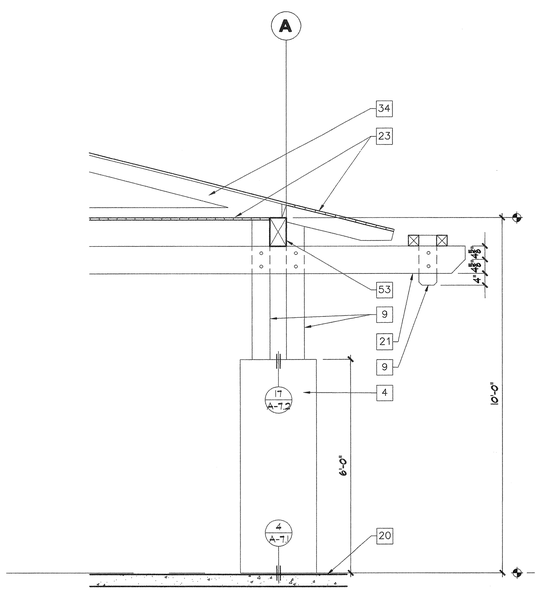

ENLARGED SECTION

SCALE 1/2"=1'-0" | 1

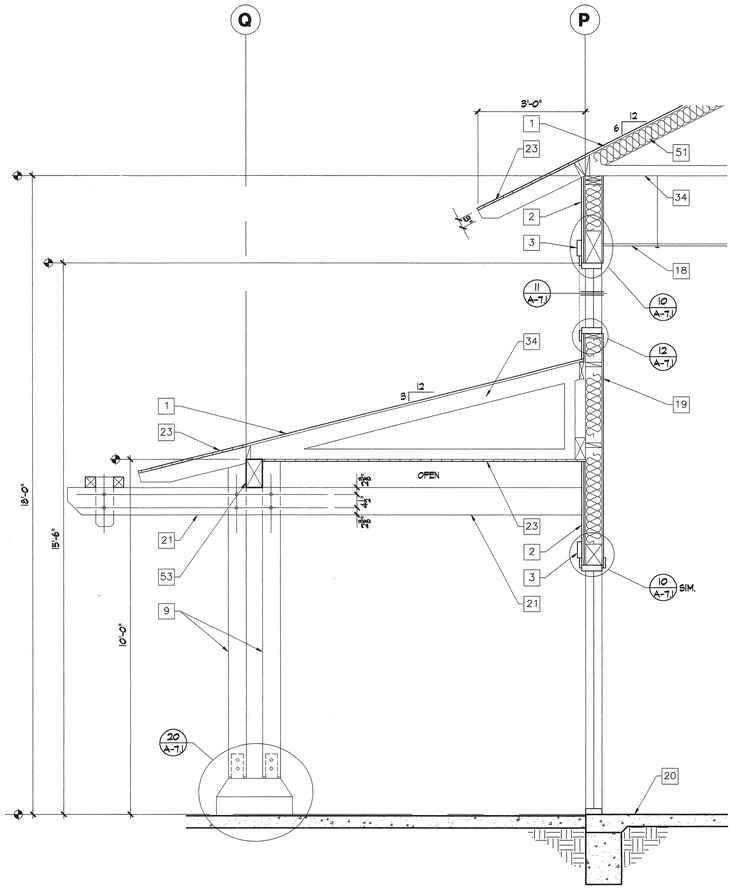

ENLARGED SECTION

SCALE 1/2"=1'-0" | 2

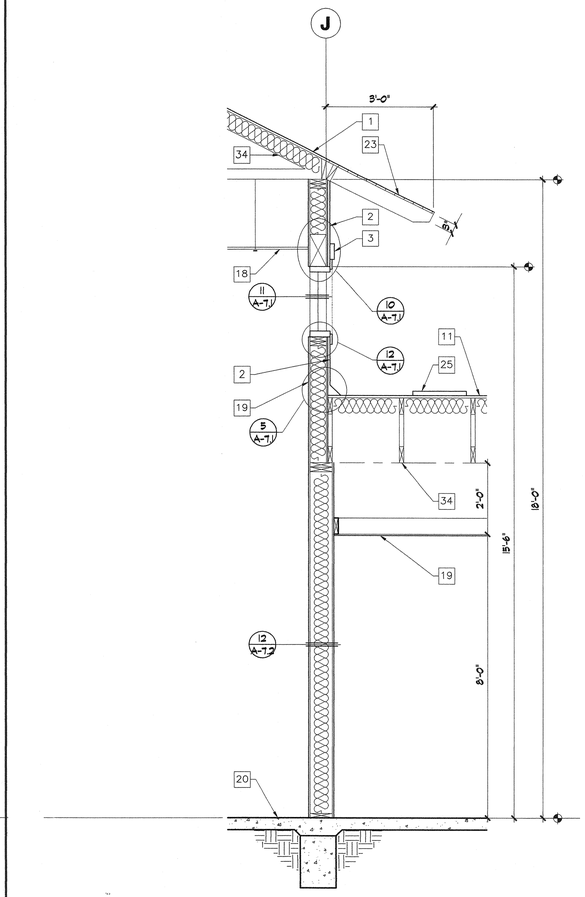

ENLARGED SECTION

SCALE 1/2"=1'-0" | 3

KEYNOTES

1. Asphalt shingle roofing.
2. Board siding (stain finish)
3. Built-up nood header trim boards (stain finish) see detail 10/A-7.1
4. Flexi-rock plaster system
5. Windows (see schedule)
6. Cast aluminum signage/lettering (see specifications for text)
7. 6x10 outlooker beams w/ 4x4 kicker supports at dormer roofs (stain finish) see detail 14/A-7.1
8. 6x outlooker beams (stain finish)
9. Double 6x6 post(s) light sandblast/stain finish
10. 2x6 corner trim boards (medium sandblast w/ stain finish) see detail 15/A-7.1
11. Built-up roofing
12. Roof access ladder and door see detail 10/A-7.2
13. Built-up cricket, see detail 2/A-7.1
14. Drinking fountain (high/low)
15. Furniture systems panels by others (N.I.C.)
16. Laminated plastic cabinetry/ counter see interior elevations
17. Laminated plastic storage cabinets/shelves, see interior elevations
18. T-bar suspended ceiling system, by Armstrong, "bold look" white w/ 15/16 prelude, see detail 2/A-7.2
19. 5/8" gyp. board (paint finish)
20. 4" thick concrete slab with vapor barrier per soils report.
21. Double 4X10 beams (light sandblast and stain finish) See detail 11/A-7.2
22. Edge of roof
23. 1x6 T. & G. sheathing (light sandblast and stain finish)
24. Exposed framing w/ 1x6 T. & G. roof sheathing (light sandblast and stain finish)
25. Walkway Boards
26. Built-up gutter/trellis, and sign #2 and sign #3 location, see detail 17/A-7.1
27. Furniture/equipment (N.I.C.)
28. Aluminum pass-thru sliding window (see interior elevations)
29. 4" dia. G.I. down spout in wall and underground to outlet per plan
30. Roof drain and overflow, see detail 3/A-7.2
31. Built-up soffit band, see detail 5/A-4.5
32. Built-up soffit/light valance, see detail 4/A-4.4
33. Dormer framing (see roof plan and structural drawings)
34. Pre-engineered truss, see structural drawings
35. Toilet compartment partitions.
36. H.C. grab bars per T-24
37. Exposed, shaped rafter tails w/ light sandblast and stain finish
38. Mop sink w/ mop rack above.
39. 1 1/4" dia. G.I. handrail, see detail 8/A-7.1
40. 4'-0" high FRP. wainscot.
41. Draft stop per UBC.
42. Light fixture
43. Light bollard fixture, see electrical plans for fixture. See detail 14/A-7.2
44. Concrete stair w/ visual striping and handrail, see detail 8/A-7.1
45. Planting area, see landscape/irrigation drawings.
46. Gate and fence, see landscape drawings.
47. 6" thick concrete curb/wall w/ sack finish typical at all exposed faces, see paving plan, sheet A-1.3 for heights (T.O.W.=6" above F.F. unless noted otherwise) see detail 13/A-7.2
48. 12" thick concrete wall, see detail 13/A-7.2 sim. (T.O.W.=+18" above fin. floor elevation)
49. 4" thick concrete slab with rock-salt finish w/ control joints @ 10'-0" o.c. and construction joints @ 20'-0" o.c. max.
50. Double 4x4 S.4.S. trellis members (stain finish) see detail 7/A-7.3
51. R-30 Batt. insulation at roof joists/trusses
52. Built-up rake fascia: 2x4 trim over 2x6 joist (stain finish)
53. 6x beam (light sandblast and stain finish)
54. Pre-fabricated/pre-engineered steel gazebo structure. Manufacturer to provide shop drawings to building department for approval
55. 5/8" plywood sheathing (paint finish)
56. 1/4" reveal/control joint, see elevations for locations, see detail 7/A-7.1
57. Fiber reinforced paneling over gyp. board.
58. 2" G.I. soffit vent (paint finish)
59. "Tapered Finial" 6" and 4" globes, 40" tall by Fisher Artworks
60. Conc. slab and/or wall see landscape drawings.

KROH/BROESKE
ARCHITECTS

6180 BROCKTON AVE.

RIVERSIDE, CA 92506

TEL 909 788-5940

FAX 909 275-0149

Park and Recreation Offices, White Park

3936 CHESTNUT ST.
RIVERSIDE, CALIFORNIA

CONSULTANTS •

NO.	DATE	REVISION
1	5-5-00	PLAN CHECK/

LICENSED ARCHITECT JAMES L. BROESKE No. C009174 Ren 11-30-01 STATE OF CALIFORNIA

THIS DRAWING AND THE DESIGNS, ARRANGEMENTS, DEPICTIONS, IDEAS AND OTHER INFORMATION CONTAINED HEREIN CONSTITUTE UNPUBLISHED WORK OF KROH/BROESKE ARCHITECTS. ALL RIGHTS REMAIN WITH KROH/BROESKE ARCHITECTS. ARCHITECTS IN PERPETUITY. NO PART THEREOF SHALL BE REPRODUCED, COPIED, DISCLOSED, DISTRIBUTED,SOLD, PUBLISHED OR OTHERWISE USED IN ANYWAY WITHOUT THE ADVANCE, EXPRESS WRITTEN CONSENT OF KROH/BROESKE ARCHITECTS. VISUAL CONTACT WITH THE ABOVE DRAWINGS, OR ANY PART THEREOF, SHALL CONSTITUTE CONCLUSIVE EVIDENCE OF ACCEPTANCE OF THESE RESTRICTIONS.

SHEET TITLE •

ENLARGED SECTIONS

DRAWN	•	M. PRICE
CHECKED	•	J. BROESKE
SCALE	•	1/2"=1'-0"
DATE	•	2-28-00
JOB	•	99008
SHEET	•	

A-4.4

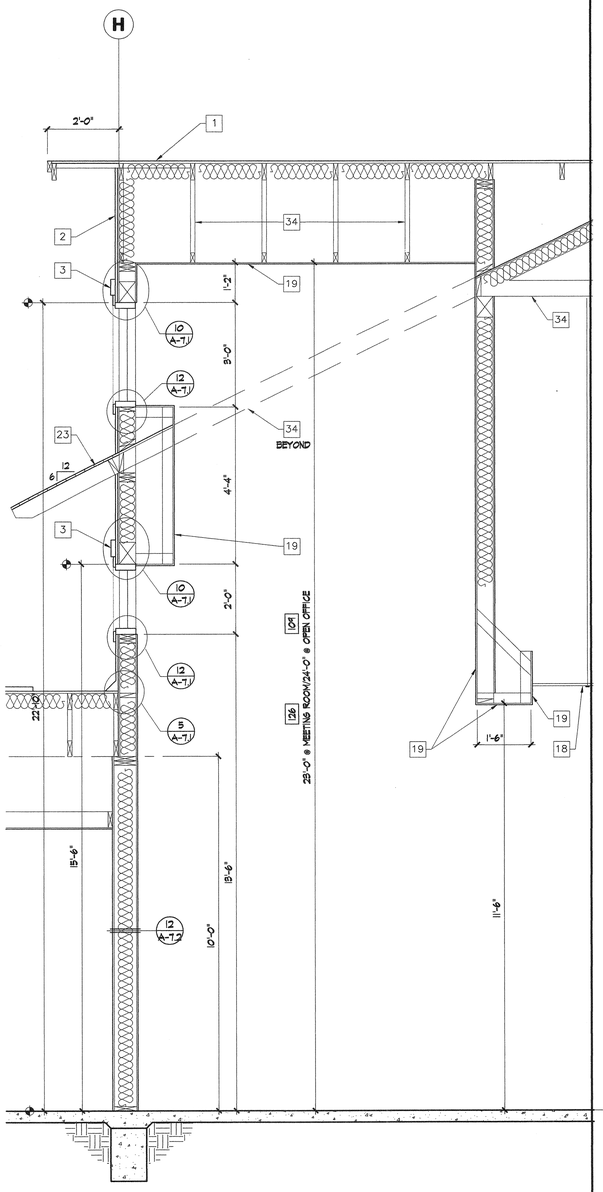

ENLARGED SECTION | SCALE 1/2"=1'-0" | 5

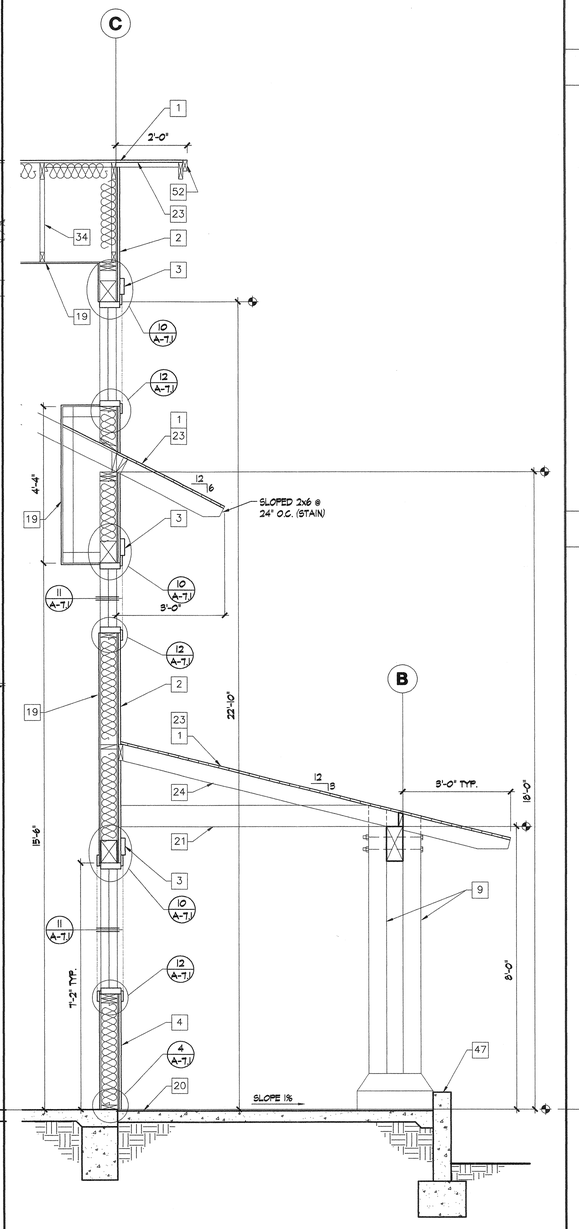

ENLARGED SECTION | SCALE 1/2"=1'-0" | 6

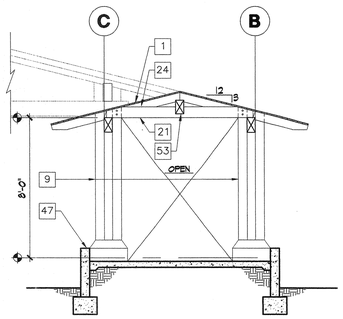

SECTION "L" | SCALE 1/4"=1'-0" | 10

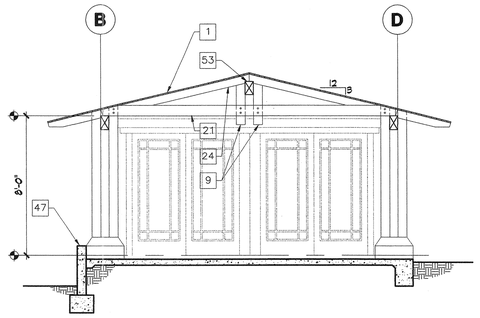

SECTION "K" | SCALE 1/4"=1'-0" | 9

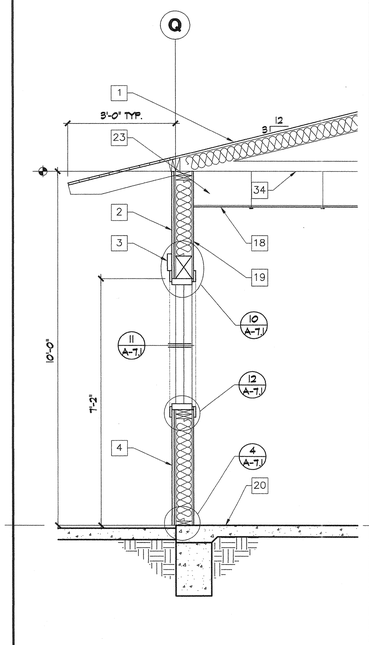

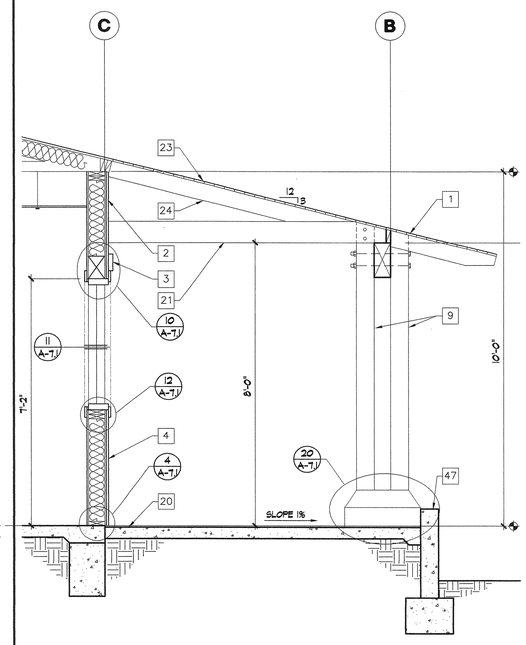

ENLARGED SECTION | SCALE 1/2"=1'-0" | 7

ENLARGED SECTION | SCALE 1/2"=1'-0" | 8

KEYNOTES

1. Asphalt shingle roofing.
2. Board siding (stain finish)
3. Built-up wood header trim boards (stain finish) see detail 10/A-7.1
4. Flexi-rock plaster system
5. Windows (see schedule)
6. Cast aluminum signage/lettering (see specifications for text)
7. 6x10 outlooker beams w/ 4x4 kicker supports at dormer roofs (stain finish) see detail 14/A-7.1
8. 6x outlooker beams (stain finish)
9. Double 6x6 post(s) light sandblast/stain finish
10. 2x6 corner trim boards (medium sandblast w/ stain finish) see detail 15/A-7.1
11. Built-up roofing
12. Roof access ladder and door see detail 10/A-7.2
13. Built-up cricket, see detail 2/A-7.1
14. Drinking fountain (high/low)
15. Furniture systems panels by others (N.I.C.)
16. Laminated plastic cabinetry/ counter see interior elevations
17. Laminated plastic storage cabinets/shelves, see interior elevations
18. T-bar suspended ceiling system, by Armstrong, "bold look" white w/ 15/16 prelude, see detail 2/A-7.2
19. 5/8" gyp. board (paint finish)
20. 4" thick concrete slab with vapor barrier per soils report.
21. Double 4X10 beams (light sandblast and stain finish) See detail 11/A-7.2
22. Edge of roof
23. 1x6 T. & G. sheathing (light sandblast and stain finish)
24. Exposed framing w/ 1x6 T. & G. roof sheathing (light sandblast and stain finish)
25. Walkway Boards
26. Built-up gutter/trellis, and sign #2 and sign #3 location, see detail 17/A-7.1
27. Furniture/equipment (N.I.C.)
28. Aluminum pass-thru sliding window (see interior elevations)
29. 4" dia. G.I. down spout in wall and underground to outlet per plan
30. Roof drain and overflow, see detail 9/A-7.2
31. Built-up soffit band, see detail 5/A-4.5
32. Built-up soffit/light valance, see detail 4/A-4.4
33. Dormer framing (see roof plan and structural drawings
34. Pre-engineered truss, see structural drawings
35. Toilet compartment partitions.
36. H.C. grab bars per T-24
37. Exposed, shaped rafter tails w/ light sandblast and stain finish
38. Mop sink w/ mop rack above.
39. 1 1/4" dia. G.I. handrail, see detail 8/A-7.1
40. 4'-0" high FRP. wainscot.
41. Draft stop per UBC.
42. Light fixture
43. Light bollard fixture, see electrical plans for fixture. See detail 14/A-7.2
44. Concrete stair w/ visual striping and handrail, see detail 8/A-7.1
45. Planting area, see landscape/irrigation drawings.
46. Gate and fence, see landscape drawings.
47. 6" thick concrete curb/wall w/ sack finish typical at all exposed faces, see paving plan, sheet A-1.3 for heights (T.O.W.=6" above F.F. unless noted otherwise) see detail 13/A-7.2
48. 12" thick concrete wall, see detail 13/A-7.2 sim. (T.O.W.=18" above fin. floor elevation)
49. 4" thick concrete slab with rock-salt finish w/ control joints @ 10'-0" o.c. and construction joints @ 20'-0" o.c. max.
50. Double 4x4 S.4.S. trellis members (stain finish) see detail 7/A-7.3
51. R-30 Batt. insulation at roof joists/trusses
52. Built-up rake fascia: 2x4 trim over 2x6 joist (stain finish)
53. 6x beam (light sandblast and stain finish)
54. Pre-fabricated/pre-engineered steel gazebo structure. Manufacturer to provide shop drawings to building department for approval
55. 5/8" plywood sheathing (paint finish)
56. 1/4" reveal/control joint, see elevations for locations, see detail 7/A-7.1
57. Fiber reinforced paneling over gyp. board.
58. 2" G.I. soffit vent (paint finish)
59. "Tapered Finial" 6" and 4" globes, 40" tall by Fisher Artworks
60. Conc. slab and/or wall see landscape drawings.

KROH/BROESKE
ARCHITECTS
6180 BROCKTON AVE.
RIVERSIDE, CA 92506
TEL 909 788-5940
FAX 909 275-0149

Park and Recreation Offices, White Park
3936 CHESTNUT ST.
RIVERSIDE, CALIFORNIA

CONSULTANTS •

NO.	DATE	REVISION
1	5-5-00	PLAN CHECK

LICENSED ARCHITECT JAMES L. BROESKE C009174 Ren 11-30-01 STATE OF CALIFORNIA

THIS DRAWING AND THE DESIGNS, ARRANGEMENTS, DEPICTIONS, IDEAS AND OTHER INFORMATION CONTAINED HEREIN CONSTITUTE UNPUBLISHED WORK OF KROH/BROESKE ARCHITECTS AND SHALL REMAIN PROPERTY OF KROH/BROESKE ARCHITECTS IN PERPETUITY. NO PART THEREOF SHALL BE REPRODUCED, COPIED, DISCLOSED, DISTRIBUTED,SOLD, PUBLISHED OR OTHERWISE USED WITHOUT THE PRIOR WRITTEN CONSENT OF KROH/BROESKE ARCHITECTS. VISUAL CONTACT WITH THE ABOVE ITEMS/USE OR ANY PART THEREOF, SHALL CONSTITUTE CONCLUSIVE EVIDENCE OF ACCEPTANCE OF THESE RESTRICTIONS.

SHEET TITLE •

ENLARGED SECTIONS

DRAWN	•	M. PRICE
CHECKED	•	J. BROESKE
SCALE	•	1/2"=1'-0"
DATE	•	2-28-00
JOB	•	99008
SHEET	•	

A-4.5

SCALE 4

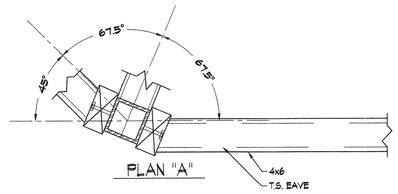

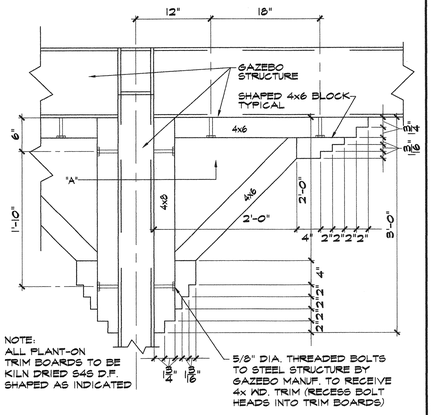

SCALE 5

TRIM DETAIL

SCALE 1"=1'-0" 1

SCALE 6

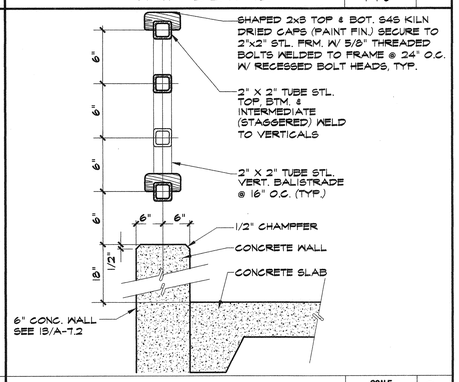

GUARD RAIL DETAIL

SCALE 1 1/2"=1'-0" 2

SCALE 7

SCALE 3

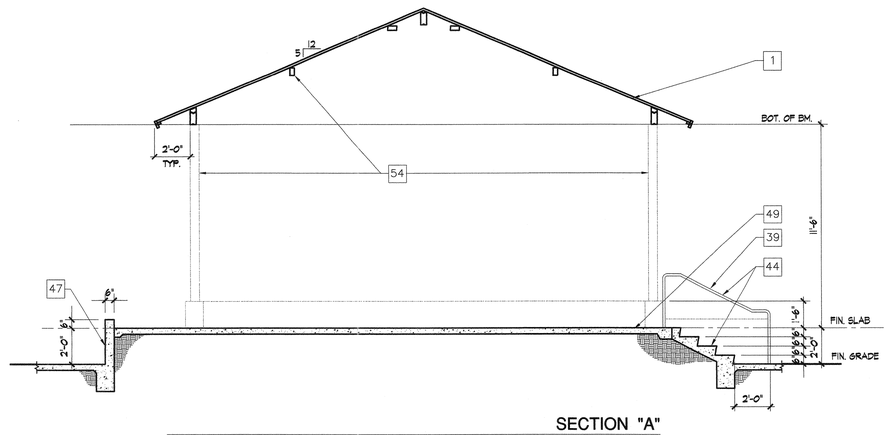

SECTION "A"

SCALE: 1/4"=1'-0"

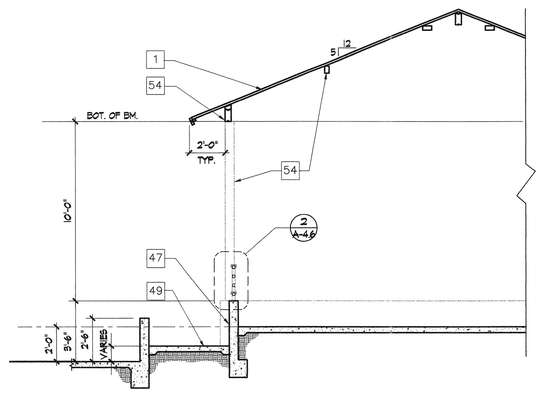

PARTIAL SECTION "B"

SCALE: 1/4"=1'-0"

KEYNOTES

1. Asphalt shingle roofing.
2. Board siding (stain finish)
3. Built-up wood header trim boards (stain finish) see detail 10/A-7.1
4. Flexi-rock plaster system
5. Windows (see schedule)
6. Cast aluminum signage/lettering (see specifications for text)
7. 6x10 outlooker beams w/ 4x4 kicker supports at dormer roofs (stain finish) see detail 14/A-7.1
8. 6x outlooker beams (stain finish)
9. Double 6x6 post(s) light sandblast/stain finish
10. 2x6 corner trim boards (medium sandblast w/ stain finish) see detail 15/A-7.1
11. Built-up roofing
12. Roof access ladder and door see detail 10/A-7.2
13. Built-up cricket, see detail 2/A-7.1
14. Drinking fountain (high/low)
15. Furniture systems panels by others (N.I.C.)
16. Laminated plastic cabinetry/ counter see interior elevations
17. Laminated plastic storage cabinets/shelves, see interior elevations
18. T-bar suspended ceiling system, by Armstrong, "solid look" white w/ 15/16 prelude, see detail 2/A-7.2
19. 5/8" gyp. board (paint finish)
20. 4" thick concrete slab with vapor barrier per soils report.
21. Double 4X10 beams (light sandblast and stain finish) See detail 11/A-7.2
22. Edge of roof
23. 1x6 T. & G. sheathing (light sandblast and stain finish)
24. Exposed framing w/ 1x6 T. & G. roof sheathing (light sandblast and stain finish)
25. Walkway Boards
26. Built-up gutter/trellis, and sign #2 and sign #3 location, see detail 17/A-7.1
27. Furniture/equipment (N.I.C.)
28. Aluminum pass-thru sliding window (see interior elevations)
29. 4" dia. G.I. down spout in wall and underground to outlet per plan
30. Roof drain and overflow, see detail 5/A-7.2
31. Built-up soffit band, see detail 5/A-4.5
32. Built-up soffit/light valance, see detail 4/A-4.4
33. Dormer framing (see roof plan and structural drawings)
34. Pre-engineered truss, see structural drawings
35. Toilet compartment partitions.
36. H.C. grab bars per T-24
37. Exposed, shaped rafter tails w/ light sandblast and stain finish
38. Mop sink w/ mop rack above.
39. 1 1/4" dia. G.I. handrail, see detail 8/A-7.1
40. 4'-0" high FRP. wainscot.
41. Draft stop per UBC.
42. Light fixture
43. Light bollard fixture, see electrical plans for fixture. See detail 14/A-7.2
44. Concrete stair w/ visual striping and handrail, see detail 8/A-7.1
45. Planting area, see landscape/irrigation drawings.
46. Gate and fence, see landscape drawings.
47. 6" thick concrete curb/wall w/ sack finish typical at all exposed faces, see paving plan, sheet A-1.3 for heights (T.O.W.=6" above F.F. unless noted otherwise) see detail 13/A-7.2
48. 12" thick concrete wall, see detail 13/A-7.2 sim. (T.O.W.=+18" above fin. floor elevation)
49. 4" thick concrete slab with rock-salt finish w/ control joints @ 10'-0" o.c. and construction joints @ 20'-0" o.c. max.
50. Double 4x4 S.4.S. trellis members (stain finish) see detail 7/A-7.3
51. R-30 Batt. insulation at roof joists/trusses
52. Built-up rake fascia: 2x4 trim over 2x6 joist (stain finish)
53. 6x beam (light sandblast and stain finish)
54. Pre-fabricated/pre-engineered steel gazebo structure. Manufacturer to provide shop drawings to building department for approval
55. 5/8" plywood sheathing (paint finish)
56. 1/4" reveal/control joint, see elevations for locations, see detail 7/A-7.1
57. Fiber reinforced paneling over gyp. board.
58. 2" G.I. soffit vent (paint finish)
59. "Tapered Finial" 6" and 4" globes, 40" tall by Fisher Artworks
60. Conc. slab and/or wall see landscape drawings.

KROH/BROESKE
ARCHITECTS

6180 BROCKTON AVE.

RIVERSIDE, CA 92506

TEL 909 788-5940

FAX 909 275-0149

Park and Recreation Offices, White Park

3936 CHESTNUT ST.
RIVERSIDE, CALIFORNIA

CONSULTANTS •

NO.	DATE	REVISION
1	5-5-00	PLAN CHECK

LICENSED ARCHITECT JAMES L. BROESKE No. C009174 Ren 11-30-01 STATE OF CALIFORNIA

THIS DRAWING AND THE DESIGNS, ARRANGEMENTS, DEPICTIONS, IDEAS AND OTHER INFORMATION CONTAINED HEREIN CONSTITUTE UNPUBLISHED WORK OF KROH/BROESKE ARCHITECTS AND SHALL REMAIN PROPERTY OF KROH/BROESKE ARCHITECTS IN PERPETUITY. NO PART THEREOF SHALL BE REPRODUCED, USED, DISCLOSED, OR ASSIGNED FOR ANY PURPOSE WITHOUT THE EXPRESS WRITTEN PERMISSION OF KROH/BROESKE ARCHITECTS. ANY UNAUTHORIZED USE WITHOUT THE PRIOR WRITTEN CONSENT OF KROH/BROESKE ARCHITECTS. VISUAL CONTACT WITH THESE DRAWINGS OR ANY PART THEREOF, SHALL CONSTITUTE CONCLUSIVE EVIDENCE OF ACCEPTANCE OF THESE RESTRICTIONS.

SHEET TITLE •

SECTIONS AND DETAILS

DRAWN	•	M. PRICE
CHECKED	•	J. BROESKE
SCALE	•	AS NOTED
DATE	•	2-28-00
JOB	•	99008
SHEET	•	

A-4.6

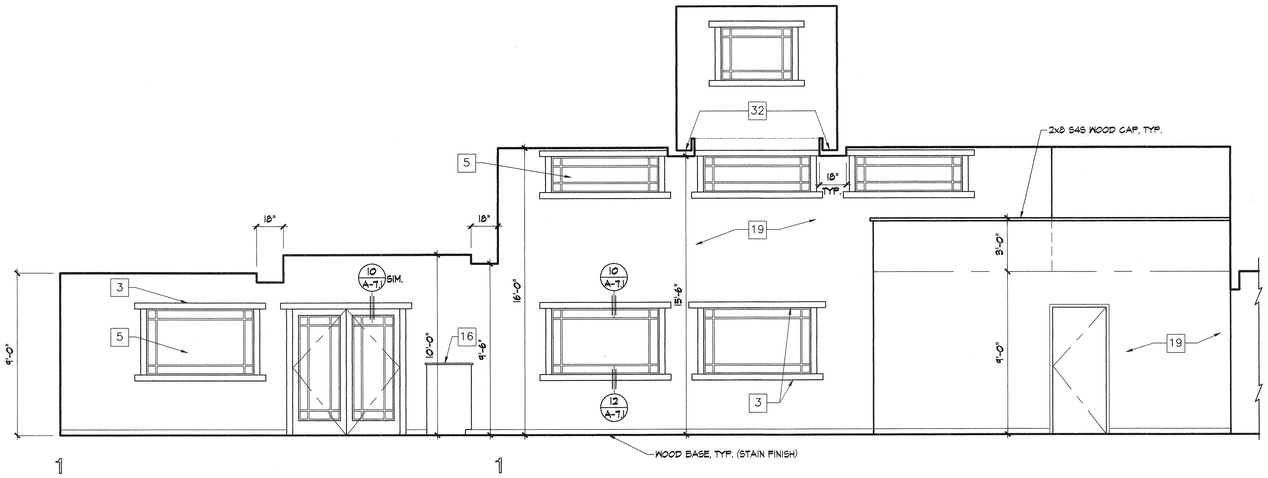

1

101

RECEPTION/WAITING ROOM

1

102

SEC./RECEPTION

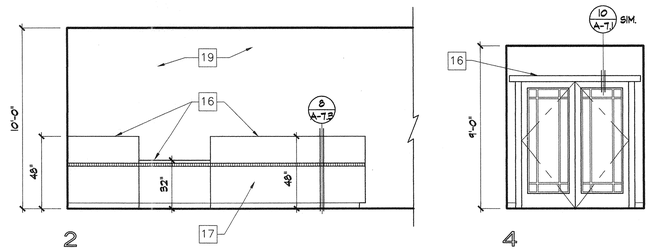

2

101

4

101

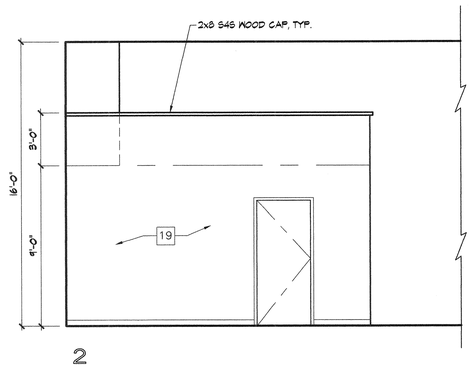

2

102

SEC./RECEPTION

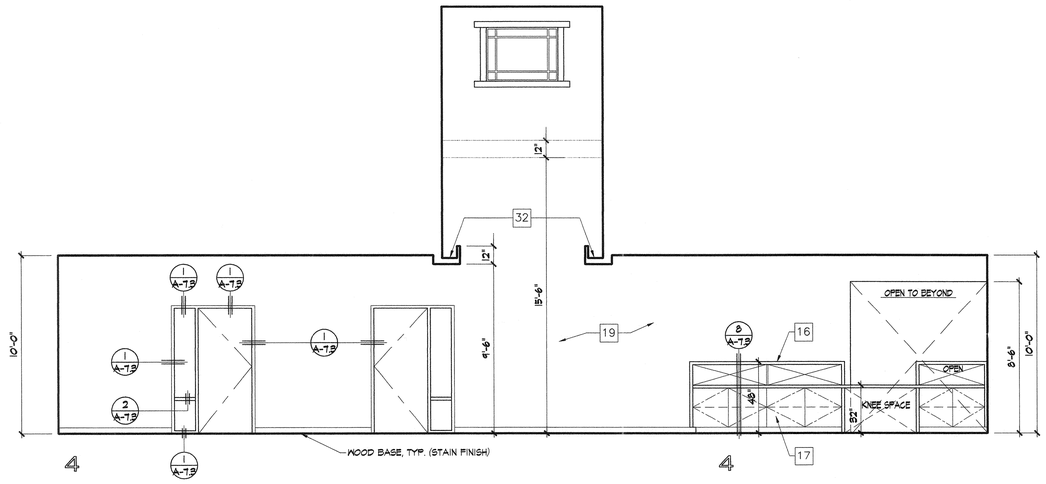

4

109

OPEN OFFICES

4

102

SEC./RECEPTION

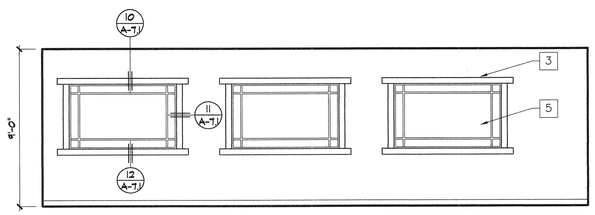

1

106

OPEN OFFICES

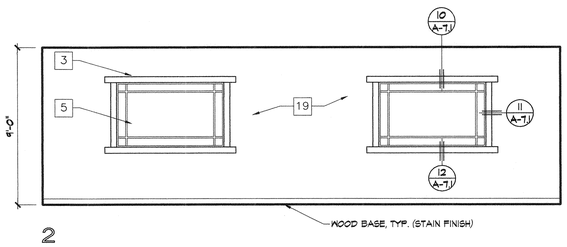

2

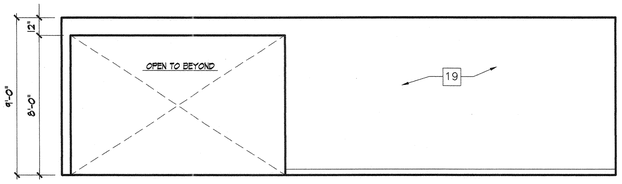

4

KEYNOTES

1. Asphalt shingle roofing.
2. Board siding (stain finish)
3. Built-up wood header trim boards (stain finish) see detail 10/A-7.1
4. Flexi-rock plaster system
5. Windows (see schedule)
6. Cast aluminum signage/lettering (see specifications for text)
7. 6x10 outlooker beams w/ 4x4 kicker supports at dormer roofs (stain finish) see detail 14/A-7.1
8. 6x outlooker beams (stain finish)
9. Double 6x6 post(s) light sandblast/stain finish
10. 2x6 corner trim boards (medium sandblast w/ stain finish) see detail 15/A-7.1
11. Built-up roofing
12. Roof access ladder and door see detail 10/A-7.2
13. Built-up cricket, see detail 2/A-7.1
14. Drinking fountain (high/low)
15. Furniture systems panels by others (N.I.C.)
16. Laminated plastic cabinetry/ counter see interior elevations
17. Laminated plastic storage cabinets/shelves, see interior elevations
18. T-bar suspended ceiling system, by Armstrong, "bold look" white w/ 15/16 prelude, see detail 2/A-7.2
19. 5/8" gyp. board (paint finish)
20. 4" thick concrete slab with vapor barrier per soils report.
21. Double 4X10 beams (light sandblast and stain finish) See detail 11/A-7.2
22. Edge of roof
23. 1X6 T. & G. sheathing (light sandblast and stain finish)
24. Exposed framing w/ 1x6 T. & G. roof sheathing (light sandblast and stain finish)
25. Walkway Boards
26. Built-up gutter/trellis, and sign #2 and sign #3 location, see detail 17/A-7.1
27. Furniture/equipment (N.I.C.)
28. Aluminum pass-thru sliding window (see interior elevations)
29. 4" dia. G.I. down spout in wall and underground to outlet per plan
30. Roof drain and overflow, see detail 3/A-7.2
31. Built-up soffit band, see detail 5/A-4.5
32. Built-up soffit/light valance, see detail 4/A-4.4
33. Dormer framing (see roof plan and structural drawings)
34. Pre-engineered truss, see structural drawings
35. Toilet compartment partitions.
36. H.C. grab bars per T-24
37. Exposed, shaped rafter tails w/ light sandblast and stain finish
38. Mop sink w/ mop rack above.
39. 1 1/4" dia. G.I. handrail, see detail 8/A-7.1
40. 4'-0" high FRP. wainscot.
41. Draft stop per UBC.
42. Light fixture
43. Light bollard fixture, see electrical plans for fixture. See detail 14/A-7.2
44. Concrete stair w/ visual striping and handrail, see detail 8/A-7.1
45. Planting area, see landscape/irrigation drawings.
46. Gate and fence, see landscape drawings.
47. 6" thick concrete curb/wall w/ sack finish typical at all exposed faces, see paving plan, sheet A-1.3 for heights (T.O.W.=6" above F.F. unless noted otherwise) see detail 13/A-7.2
48. 12" thick concrete wall, see detail 13/A-7.2 sim. (T.O.W.=+18" above fin. floor elevation)
49. 4" thick concrete slab with rock-salt finish w/ control joints @ 10'-0" o.c. and construction joints @ 20'-0" o.c. max.
50. Double 4x4 S.4.S. trellis members (stain finish) see detail 7/A-7.3
51. R-30 Batt. insulation at roof joists/trusses
52. Built-up rake fascia: 2x4 trim over 2x6 joist (stain finish)
53. 6x beam (light sandblast and stain finish)
54. Pre-fabricated/pre-engineered steel gazebo structure. Manufacturer to provide shop drawings to building department for approval
55. 5/8" plywood sheathing (paint finish)
56. 1/4" reveal/control joint, see elevations for locations, see detail 7/A-7.1
57. Fiber reinforced paneling over gyp. board.
58. 2" G.I. soffit vent (paint finish)
59. "Tapered Finial" 6" and 4" globes, 40" tall by Fisher Artworks
60. Conc. slab and/or wall see landscape drawings.

KROH/BROESKE
ARCHITECTS
6180 BROCKTON AVE.
RIVERSIDE, CA 92506
TEL 909 788-5940
FAX 909 275-0149

Park and Recreation Offices, White Park

3936 CHESTNUT ST.
RIVERSIDE, CALIFORNIA

CONSULTANTS •

NO.	DATE	REVISION
1	5-5-00	PLAN CHECK

LICENSED ARCHITECT JAMES L. BROESKE No. C009174 Ren 11-30-01 STATE OF CALIFORNIA

THIS DRAWING AND THE DESIGNS, ARRANGEMENTS, DEPICTIONS, IDEAS AND INFORMATION CONTAINED THEREIN CONSTITUTE THE WORK PRODUCT OF KROH/BROESKE ARCHITECTS AND SHALL REMAIN PROPERTY OF KROH/BROESKE ARCHITECTS IN PERPETUITY. NO PART THEREOF SHALL BE REPRODUCED, COPIED, DISCLOSED, DISTRIBUTED/SOLD, PUBLISHED OR OTHERWISE USED IN ANYWAY WITHOUT THE ADVANCE EXPRESS WRITTEN CONSENT OF KROH/BROESKE ARCHITECTS. VISUAL CONTACT WITH THE ABOVE DRAWINGS, OR ANY PART THEREOF, SHALL CONSTITUTE CONCLUSIVE EVIDENCE OF ACCEPTANCE OF THESE RESTRICTIONS.

SHEET TITLE •

INTERIOR ELEVATIONS

DRAWN	M. PRICE
CHECKED	J. BROESKE
SCALE	1/4"-1'-0"
DATE	2-28-00
JOB	99008
SHEET	

A-5.1

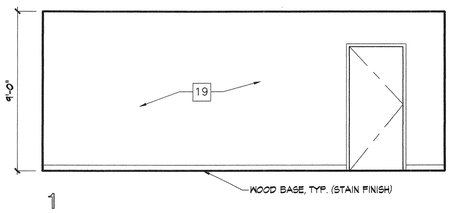

1

108

CONFERENCE

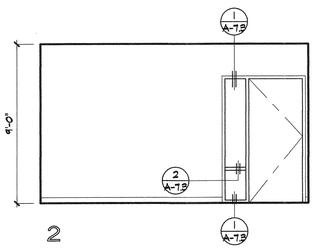

2

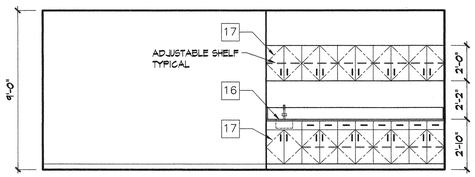

3

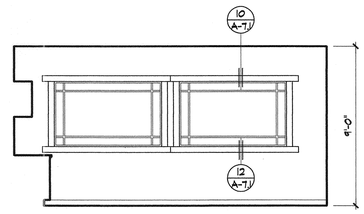

4

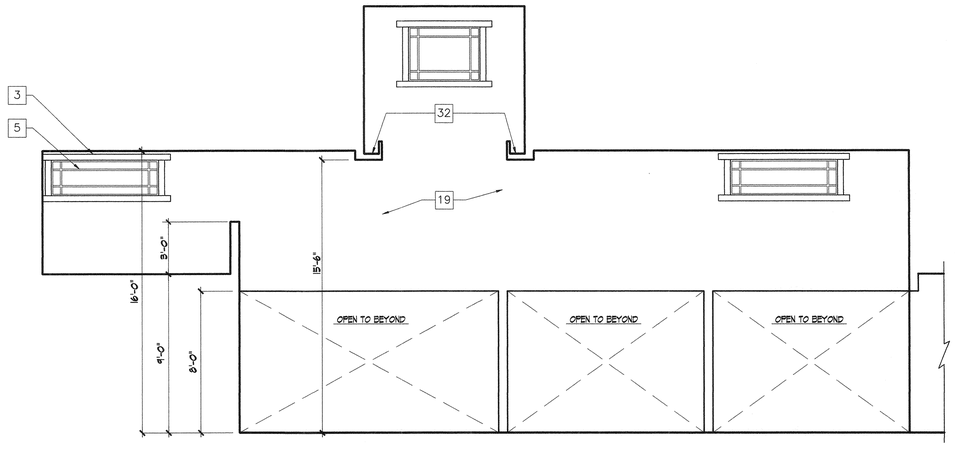

2

109

OPEN OFFICES

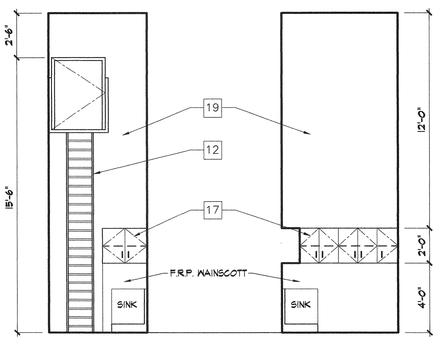

1 2

127

JANITOR

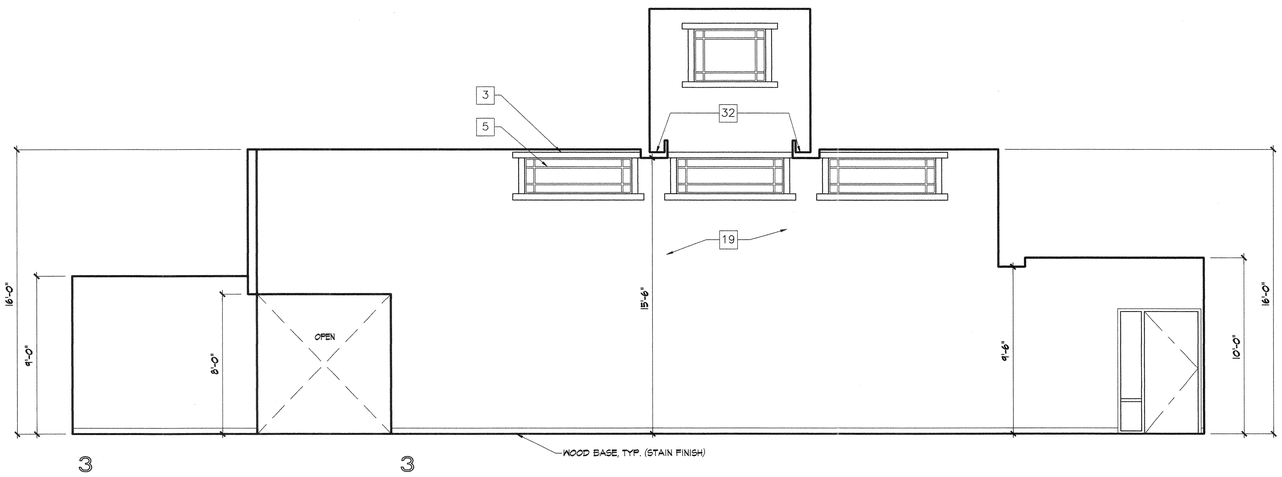

3 3

137 109

OPEN OFFICES

KEYNOTES

1. Asphalt shingle roofing.
2. Board siding (stain finish)
3. Built-up wood header trim boards (stain finish) see detail 10/A-7.1
4. Flexi-rock plaster system
5. Windows (see schedule)
6. Cast aluminum signage/lettering (see specifications for text)
7. 6x10 outlooker beams w/ 4x4 kicker supports at dormer roofs (stain finish) see detail 14/A-7.1
8. 6x outlooker beams (stain finish)
9. Double 6x6 post(s) light sandblast/stain finish
10. 2x6 corner trim boards (medium sandblast w/ stain finish) see detail 15/A-7.1
11. Built-up roofing
12. Roof access ladder and door see detail 10/A-7.2
13. Built-up cricket, see detail 2/A-7.1
14. Drinking fountain (high/low)
15. Furniture systems panels by others (N.I.C.)
16. Laminated plastic cabinetry/ counter see interior elevations
17. Laminated plastic storage cabinets/shelves, see interior elevations
18. T-bar suspended ceiling system, by Armstrong, "bold look" white w/ 15/16 prelude, see detail 2/A-7.2
19. 5/8" gyp. board (paint finish)
20. 4" thick concrete slab with vapor barrier per soils report.
21. Double 4x10 beams (light sandblast and stain finish) See detail 11/A-7.2
22. Edge of roof
23. 1x6 T. & G. sheathing (light sandblast and stain finish)
24. Exposed framing w/ 1x6 T. & G. roof sheathing (light sandblast and stain finish)
25. Walkway Boards
26. Built-up gutter/trellis, and sign #2 and sign #3 location, see detail 17/A-7.1
27. Furniture/equipment (N.I.C.)
28. Aluminum pass-thru sliding window (see interior elevations)
29. 4" dia. G.I. down spout in wall and underground to outlet per plan
30. Roof drain and overflow, see detail 5/A-7.2
31. Built-up soffit band, see detail 5/A-4.5
32. Built-up soffit/light valance, see detail 4/A-4.4
33. Dormer framing (see roof plan and structural drawings)
34. Pre-engineered truss, see structural drawings
35. Toilet compartment partitions.
36. H.C. grab bars per T-24
37. Exposed, shaped rafter tails w/ light sandblast and stain finish
38. Mop sink w/ mop rack above.
39. 1 1/4" dia. G.I. handrail, see detail 8/A-7.1
40. 4'-0" high FRP. wainscot.
41. Draft stop per UBC.
42. Light fixture
43. Light bollard fixture, see electrical plans for fixture. See detail 14/A-7.2
44. Concrete stair w/ visual striping and handrail, see detail 8/A-7.1
45. Planting area, see landscape/irrigation drawings.
46. Gate and fence, see landscape drawings.
47. 6" thick concrete curb/wall w/ sack finish typical at all exposed faces, see paving plan, sheet A-1.3 for heights (T.O.W.=6" above F.F. unless noted otherwise) see detail 15/A-7.2
48. 12" thick concrete wall, see detail 15/A-7.2 sim. (T.O.W.=18" above fin. floor elevation)
49. 4" thick concrete slab with rock-salt finish w/ control joints @ 10'-0" o.c. and construction joints @ 20'-0" o.c. max.
50. Double 4x4 S.4.S. trellis members (stain finish) see detail 7/A-7.3
51. R-30 Batt. insulation at roof joists/trusses
52. Built-up rake fascia: 2x4 trim over 2x6 joist (stain finish)
53. 6x beam (light sandblast and stain finish)
54. Pre-fabricated/pre-engineered steel gazebo structure. Manufacturer to provide shop drawings to building department for approval
55. 5/8" plywood sheathing (paint finish)
56. 1/4" reveal/control joint, see elevations for locations, see detail 7/A-7.1
57. Fiber reinforced paneling over gyp. board
58. 2" G.I. soffit vent (paint finish)
59. "Tapered Finial" 6" and 4" globes, 40" tall by Fisher Artworks
60. Conc. slab and/or wall see landscape drawings.

KROH/BROESKE
ARCHITECTS
6180 BROCKTON AVE.
RIVERSIDE, CA 92506
TEL 909 788-5940
FAX 909 275-0149

Park and Recreation Offices, White Park

3936 CHESTNUT ST.
RIVERSIDE, CALIFORNIA

CONSULTANTS •

NO.	DATE	REVISION
1	5-5-00	PLAN CHECK

LICENSED ARCHITECT
JAMES L. BROESKE
No. C009174
Ren 11-30-01
STATE OF CALIFORNIA

THIS DRAWING AND THE DESIGNS, ARRANGEMENTS, DEPICTIONS, IDEAS AND OTHER INFORMATION CONTAINED HEREIN CONSTITUTE UNPUBLISHED WORK OF KROH/BROESKE ARCHITECTS AND SHALL REMAIN PROPERTY OF KROH/BROESKE ARCHITECTS IN PERPETUITY. NO PART THEREOF SHALL BE REPRODUCED, COPIED, DISCLOSED, DISTRIBUTED/SOLD, PUBLISHED OR OTHERWISE USED IN ANYWAY WITHOUT THE ADVANCE EXPRESS WRITTEN CONSENT OF KROH/BROESKE ARCHITECTS. VISUAL CONTACT WITH THE ABOVE DRAWINGS, OR ANY PART THEREOF, SHALL CONSTITUTE CONCLUSIVE EVIDENCE OF ACCEPTANCE OF THESE RESTRICTIONS.

SHEET TITLE •

INTERIOR ELEVATIONS

DRAWN	•	M. PRICE
CHECKED	•	J. BROESKE
SCALE	•	1/4"-1'-0"
DATE	•	2-28-00
JOB	•	99008
SHEET	•	

A-5.2

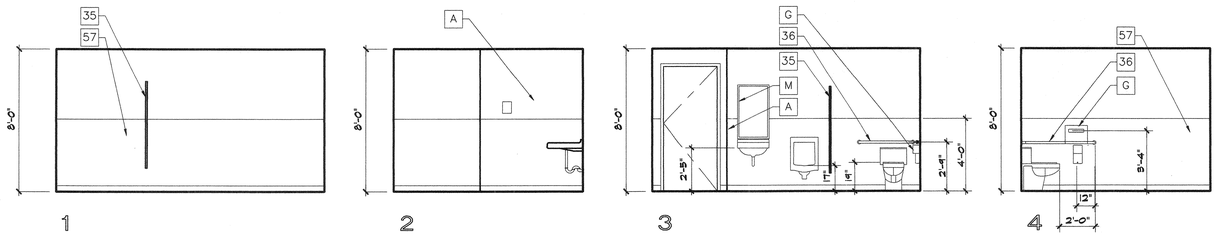

1 2 3 4

110

NOTE: FOR TOILET ACCESSORIES SCHEDULE, SEE SHEET AJ-2.1.

MEN'S RESTROOM

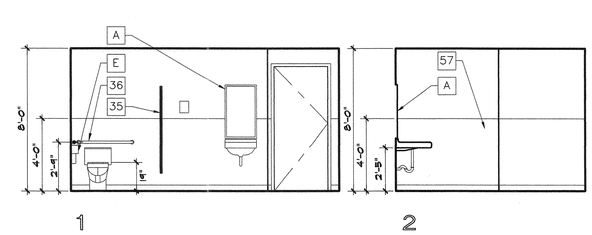

1 2

111

WOMEN'S RESTROOM

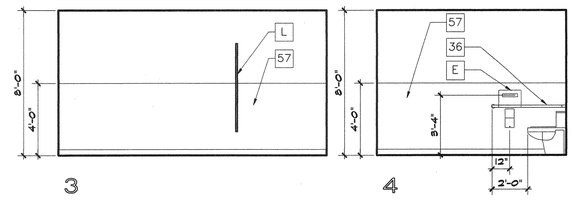

3 4

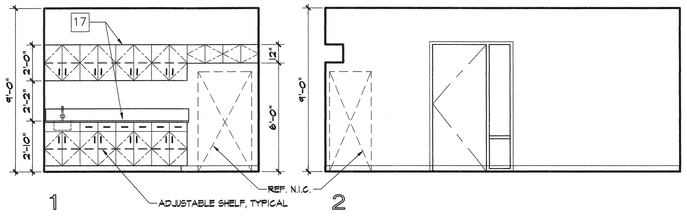

1 2

112

BREAK ROOM

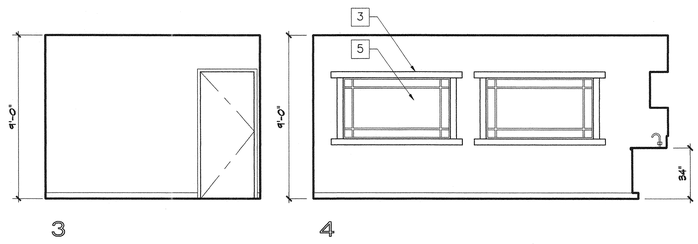

3 4

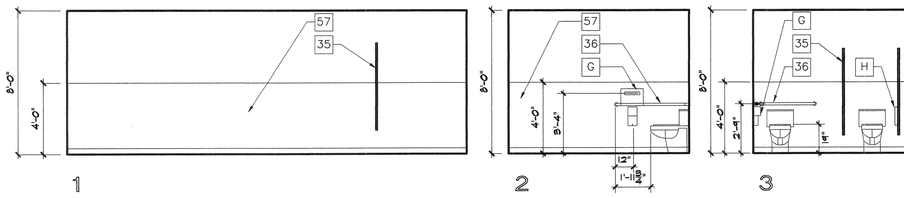

1 2 3 4

114

MEN'S RESTROOM

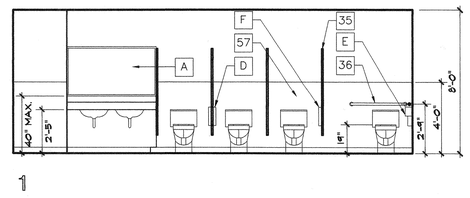

1

115

WOMEN'S RESTROOM

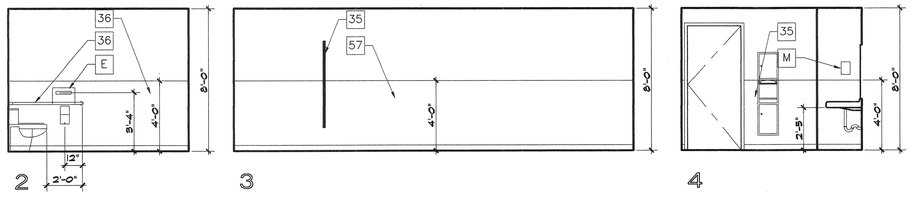

2 3 4

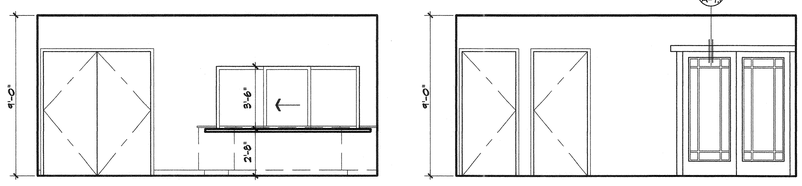

2 4

124 138 138 124

VESTIBULE RECEPT. RECEPT. VESTIBULE

KEYNOTES

1. Asphalt shingle roofing.
2. Board siding (stain finish)
3. Built-up hood header trim boards (stain finish) see detail 10/A-7.1
4. Flexi-rock plaster system
5. Windows (see schedule)
6. Cast aluminum signage/lettering (see specifications for text)
7. 6x10 outlooker beams w/ 4x4 kicker supports at dormer roofs (stain finish) see detail 14/A-7.1
8. 6x outlooker beams (stain finish)
9. Double 6x6 post(s) light sandblast/stain finish
10. 2x8 corner trim boards (medium sandblast w/ stain finish) see detail 15/A-7.1
11. Built-up roofing
12. Roof access ladder and door see detail 10/A-7.2
13. Built-up cricket, see detail 2/A-7.1
14. Drinking fountain (high/low)
15. Furniture systems panels by others (N.I.C.)
16. Laminated plastic cabinetry/ counter see interior elevations
17. Laminated plastic storage cabinets/shelves, see interior elevations
18. T-bar suspended ceiling system, by Armstrong, "bold look" white w/ 15/16 prelude, see detail 2/A-7.2
19. 5/8" gyp. board (paint finish)
20. 4" thick concrete slab with vapor barrier per soils report.
21. Double 4X10 beams (light sandblast and stain finish) See detail 11/A-7.2
22. Edge of roof
23. 1x6 T. & G. sheathing (light sandblast and stain finish)
24. Exposed framing w/ 1x6 T. & G. roof sheathing (light sandblast and stain finish)
25. Walkway Boards
26. Built-up gutter/trellis, and sign #2 and sign #3 location, see detail 17/A-7.1
27. Furniture/equipment (N.I.C.)
28. Aluminum pass-thru sliding window (see interior elevations)
29. 4" dia. G.I. down spout in wall and underground to outlet per plan
30. Roof drain and overflow, see detail 3/A-7.2
31. Built-up soffit band, see detail 5/A-4.5
32. Built-up soffit/light valance, see detail 4/A-4.4
33. Dormer framing (see roof plan and structural drawings)
34. Pre-engineered truss, see structural drawings
35. Toilet compartment partitions.
36. H.C. grab bars per T-24
37. Exposed, shaped rafter tails w/ light sandblast and stain finish
38. Mop sink w/ mop rack above.
39. 1 1/4" dia. G.I. handrail, see detail 8/A-7.1
40. 4'-0" high FRP. wainscot.
41. Draft stop per UBC.
42. Light fixture
43. Light bollard fixture, see electrical plans for fixture. See detail 14/A-7.2
44. Concrete stair w/ visual striping and handrail, see detail 8/A-7.1
45. Planting area, see landscape/irrigation drawings.
46. Gate and fence, see landscape drawings.
47. 6" thick concrete curb/wall w/ sack finish typical at all exposed faces, see paving plan, sheet A-1.3 for heights (T.O.W.=6" above F.F. unless noted otherwise) see detail 18/A-7.2
48. 12" thick concrete wall, see detail 13/A-7.2 sim. (T.O.W.=18" above fin. floor elevation)
49. 4" thick concrete slab with rock-salt finish w/ control joints @ 10'-0" o.c. and construction joints @ 20'-0" o.c. max.
50. Double 4x4 S.4.S. trellis members (stain finish) see detail 7/A-7.3
51. R-30 Batt. insulation at roof joists/trusses
52. Built-up rake fascia: 2x4 trim over 2x6 joist (stain finish)
53. 6x beam (light sandblast and stain finish)
54. Pre-fabricated/pre-engineered steel gazebo structure. Manufacturer to provide shop drawings to building department for approval
55. 5/8" plywood sheathing (paint finish)
56. 1/4" reveal/control joint, see elevations for locations, see detail 7/A-7.1
57. Fiber reinforced paneling over gyp. board.
58. 2" G.I. soffit vent (paint finish)
59. "Tapered Finial" 6" and 4" globes, 40" tall by Fisher Artworks
60. Conc. slab and/or wall see landscape drawings.

KROH/BROESKE
ARCHITECTS
6180 BROCKTON AVE.
RIVERSIDE, CA 92506
TEL 909 788-5940
FAX 909 275-0149

Park and Recreation Offices, White Park

3936 CHESTNUT ST.
RIVERSIDE, CALIFORNIA

CONSULTANTS

NO.	DATE	REVISION
1	5-5-00	PLAN CHECK

LICENSED ARCHITECT JAMES L. BROESKE No. C009174 Ren 11-30-01 STATE OF CALIFORNIA

THIS DRAWING AND THE DESIGNS, ARRANGEMENTS, DEPICTIONS, IDEAS AND OTHER INFORMATION CONTAINED HEREIN CONSTITUTE UNPUBLISHED WORK OF KROH/BROESKE ARCHITECTS AND SHALL REMAIN PROPERTY OF KROH/BROESKE ARCHITECTS IN PERPETUITY. NO PART THEREOF SHALL BE REPRODUCED, COPIED, DISCLOSED, DISTRIBUTED,SOLD, PUBLISHED OR OTHERWISE USED IN ANYWAY WITHOUT THE ADVANCE EXPRESS WRITTEN CONSENT OF KROH/BROESKE ARCHITECTS. VISUAL CONTACT WITH THE ABOVE DRAWINGS, OR ANY PART THEREOF, SHALL CONSTITUTE CONCLUSIVE EVIDENCE OF ACCEPTANCE OF THESE RESTRICTIONS.

SHEET TITLE

INTERIOR ELEVATIONS

DRAWN	
CHECKED	
SCALE	1/4"=1'-0"
DATE	2-28-00
JOB	99008
SHEET	

A-5.3

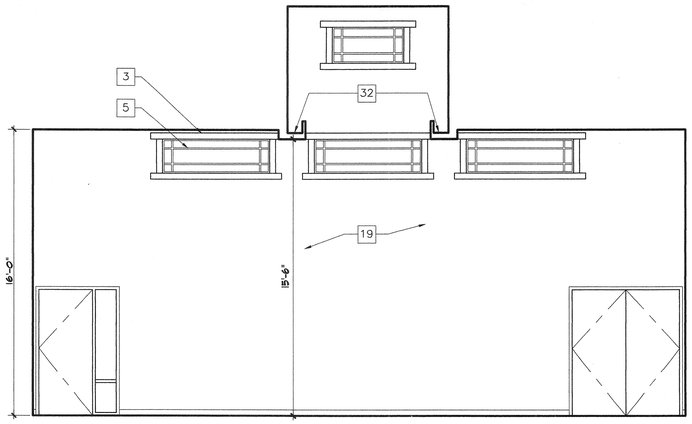

1

126

MEETING ROOM

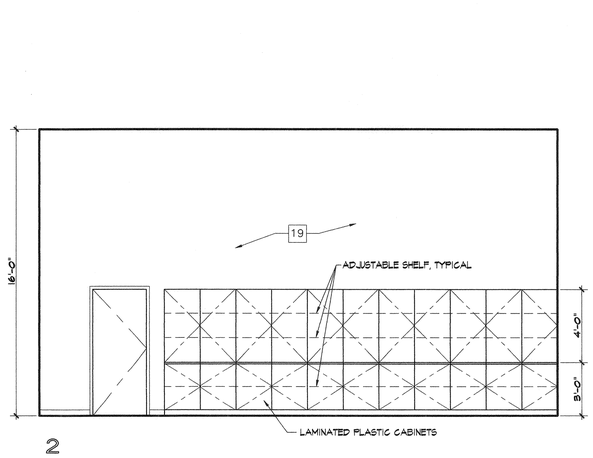

2

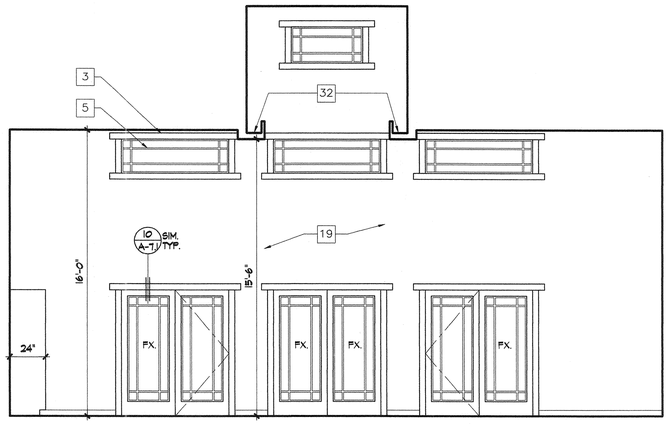

3

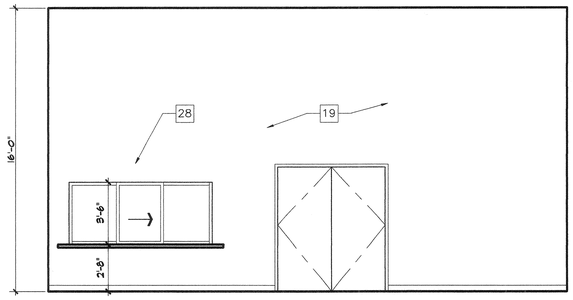

4

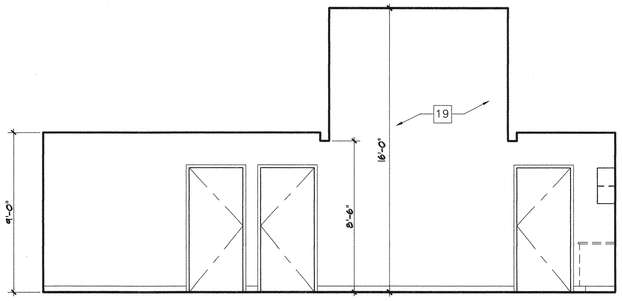

3

130

HALL

3

128

RECEPTION

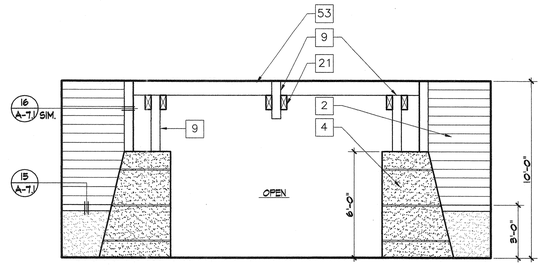

1

140

COURT

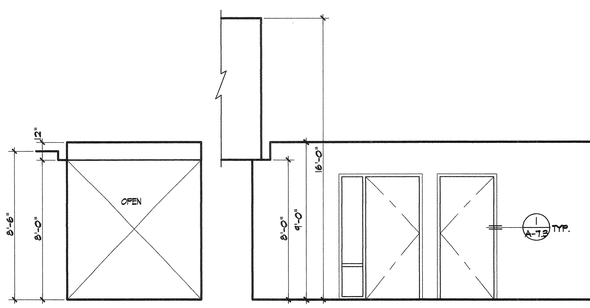

1

129

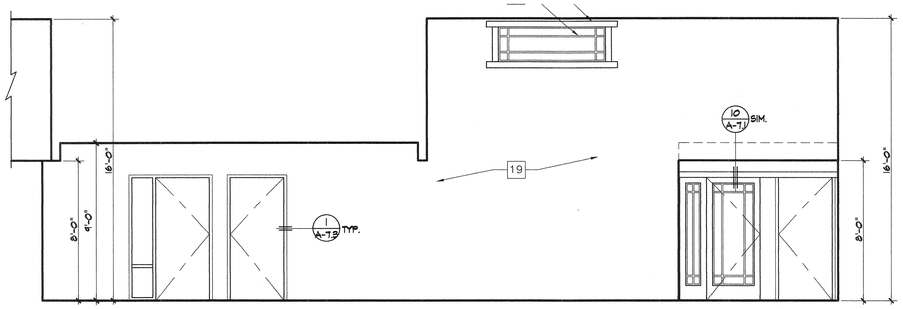

2

129

2

130

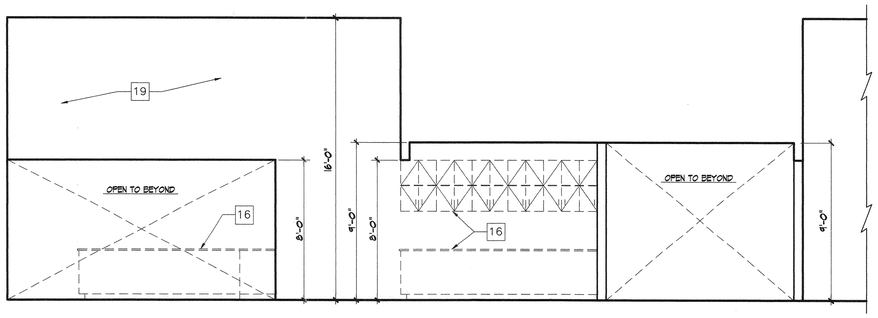

4

130

HALL

KEYNOTES

1. Asphalt shingle roofing.
2. Board siding (stain finish)
3. Built-up wood header trim boards (stain finish) see detail 10/A-7.1
4. Flexi-rock plaster system
5. Windows (see schedule)
6. Cast aluminum signage/lettering (see specifications for text)
7. 6x10 outlooker beams w/ 4x4 kicker supports at dormer roofs (stain finish) see detail 14/A-7.1
8. 6x outlooker beams (stain finish)
9. Double 6x6 post(s) light sandblast/stain finish
10. 2x6 corner trim boards (medium sandblast w/ stain finish) see detail 15/A-7.1
11. Built-up roofing
12. Roof access ladder and door see detail 10/A-7.2
13. Built-up cricket, see detail 2/A-7.1
14. Drinking fountain (high/low)
15. Furniture systems panels by others (N.I.C.)
16. Laminated plastic cabinetry/ counter see interior elevations
17. Laminated plastic storage cabinets/shelves, see interior elevations
18. T-bar suspended ceiling system, by Armstrong, "bold look" white w/ 15/16 prelude, see detail 2/A-7.2
19. 5/8" gyp. board (paint finish)
20. 4" thick concrete slab with vapor barrier per soils report.
21. Double 4x10 beams (light sandblast and stain finish) See detail 11/A-7.2
22. Edge of roof
23. 1x6 T. & G. sheathing (light sandblast and stain finish)
24. Exposed framing w/ 1x6 T. & G. roof sheathing (light sandblast and stain finish)
25. Walkway Boards
26. Built-up gutter/trellis, and sign #2 and sign #3 location, see detail 17/A-7.1
27. Furniture/equipment (N.I.C.)
28. Aluminum pass-thru sliding window (see interior elevations)
29. 4" dia. G.I. down spout in wall and underground to outlet per plan
30. Roof drain and overflow, see detail 3/A-7.2
31. Built-up soffit band, see detail 5/A-4.5
32. Built-up soffit/light valance, see detail 4/A-4.4
33. Dormer framing (see roof plan and structural drawings)
34. Pre-engineered truss, see structural drawings
35. Toilet compartment partitions.
36. H.C. grab bars per T-24
37. Exposed, shaped rafter tails w/ light sandblast and stain finish
38. Mop sink w/ mop rack above.
39. 1 1/4" dia. G.I. handrail, see detail 8/A-7.1
40. 4'-0" high FRP. wainscot.
41. Draft stop per UBC.
42. Light fixture
43. Light bollard fixture, see electrical plans for fixture. See detail 14/A-7.2
44. Concrete stair w/ visual striping and handrail, see detail 8/A-7.1
45. Planting area, see landscape/irrigation drawings.
46. Gate and fence, see landscape drawings.
47. 6" thick concrete curb/wall w/ sack finish typical at all exposed faces, see paving plan, sheet A-1.3 for heights (T.O.W.=6" above F.F. unless noted otherwise) see detail 13/A-7.2
48. 12" thick concrete wall, see detail 13/A-7.2 sim. (T.O.W.=18" above fin. floor elevation)
49. 4" thick concrete slab with rock-salt finish w/ control joints @ 10'-0" o.c. and construction joints @ 20'-0" o.c. max.
50. Double 4x4 S.4.S. trellis members (stain finish) see detail 7/A-7.3
51. R-30 Batt. insulation at roof joists/trusses
52. Built-up rake fascia. 2x4 trim over 2x6 joist (stain finish)
53. 6x beam (light sandblast and stain finish)
54. Pre-fabricated/pre-engineered steel gazebo structure. Manufacturer to provide shop drawings to building department for approval
55. 5/8" plywood sheathing (paint finish)
56. 1/4" reveal/control joint, see elevations for locations, see detail 7/A-7.1
57. Fiber reinforced paneling over gyp. board.
58. 2" G.I. soffit vent (paint finish)
59. "Tapered Finial" 6" and 4" globes, 40" tall by Fisher Artworks
60. Conc. slab and/or wall see landscape drawings.

KROH/BROESKE
ARCHITECTS

6180 BROCKTON AVE.

RIVERSIDE, CA 92506

TEL 909 788-5940

FAX 909 275-0149

Park and Recreation Offices, White Park

3936 CHESTNUT ST.
RIVERSIDE, CALIFORNIA

CONSULTANTS •

NO.	DATE	REVISION
1	5-5-00	PLAN CHECK

LICENSED ARCHITECT
JAMES L. BROESKE
No. C009174
Ren 11-30-01
STATE OF CALIFORNIA

THIS DRAWING AND THE DESIGNS, ARRANGEMENTS, DEPICTIONS, IDEAS AND OTHER INFORMATION CONTAINED THEREIN CONSTITUTE THE PROPERTY OF KROH/BROESKE ARCHITECTS AND SHALL REMAIN PROPERTY OF KROH/BROESKE ARCHITECTS IN PERPETUITY. NO PART THEREOF SHALL BE REPRODUCED, COPIED, DISCLOSED, DISTRIBUTED/SOLD, PUBLISHED OR OTHERWISE USED IN ANYWAY WITHOUT THE ADVANCE EXPRESS WRITTEN CONSENT OF KROH/BROESKE ARCHITECTS. VISUAL CONTACT WITH THE ABOVE DRAWINGS, OR ANY PART THEREOF, SHALL CONSTITUTE CONCLUSIVE EVIDENCE OF ACCEPTANCE OF THESE RESTRICTIONS.

SHEET TITLE •

INTERIOR ELEVATIONS

DRAWN	•	
CHECKED	•	
SCALE	•	1/4"-1'-0"
DATE	•	2-28-00
JOB	•	99008
SHEET	•	

A-5.4

ROOM FINISHES

1. PAINT- SATIN FINISH
2. PAINT- EGG SHELL
3. PAINT- SEMI-GLOSS
4. CLEAR MATTE FINISH SEALER
5. FACTORY FINISHED
6. STAIN AND CLEAR MATTE FINISH SEALER
7. SOLID BODY STAIN

ABBREVIATIONS

PL -"FLEXI-ROCK" SMOOTH TEXTURE PLASTER W/ PAINT

G.B. -5/8" GYPSUM BOARD-SMOOTH FINISH

G.B.W. - 5/8" GYPSUM BOARD, WATER RESISTANT

TB -T- BAR SUSPENDED CEILING

V.T. - VINYL TILER

WD. 4" WOOD BASE

FRP - FIBER REINFORCE PANEL

E. F. - EXPOSEED FRAMING

C. T. - CERAMIC TILE

V. S. - SIDING

P. W. - EXTERIOR GRADE PLYWOOD

FINISH SCHEDULE

ROOM		FLOOR	BASE				WALLS																CEILING			SOFFIT				REMARKS
							1				2				3				4											
NO.	NAME	MATERIAL	FIN.	MAT'L.	FIN.	MAT'L.	FIN.	MAT'L.	FIN.	MAT'L.	FIN.	MAT'L.	FIN.	MAT'L.	FIN.	MAT'L.	FIN.	MAT'L.	FIN.	MAT'L.	FIN.	MAT'L.	FIN.	MAT'L.	FIN.	HT.	MAT'L.	FIN.	HT.	HT.	
101	RECEPTION/WAITING	VINYL TILE	5	WD	1	—	—	GB	2	—	—	—	—	—	—	GB	2			GB	2	—	—	TB	5	9'-0"	—	—	—	—	
102	SEC./RECEPTION	CARPET	5	WD	1	—	—	GB	2	—	—	GB	2	—	—	—	—	—	—	GB	2	—	—	TB	5	16'-0"	11'-6"	GB	15'-6"		
103	ELECTRICAL ROOM	CONCRETE	—	—	—	—	—	GB	—	—	—	GB	—	—	—	GB	—	—	—	GB	2	—	—	EF	—	8'-0"	—	—	—	—	
104	STORAGE	CARPET	5	WD	1	—	—	GB	2	—	—	GB	2	—	—	GB	2	—	—	GB	2	—	—	GB	2	8'-0"	—	—	—	—	
105	FILES	VINYL TILE	5	WD	1	—	—	GB	2	—	—	GB	2	—	—	GB	2	—	—	GB	2	—	—	GB	2	8'-0"	—	—	—	—	
106	OPEN OFFICES	CARPET	5	WD	1	—	—	GB	2	—	—	GB	2	—	—	GB	2	—	—	GB	2	—	—	TB	5	9'-0"	—	—	—	—	
107	STORAGE	CARPET	5	WD	1	—	—	GB	2	—	—	GB	2	—	—	GB	2	—	—	GB	2	—	—	TB	5	9'-0"	—	—	—	—	
108	CONFERENCE	CARPET	5	WD	1	—	—	GB	2	—	—	GB	2	—	—	GB	2	—	—	GB	2	—	—	TB	5	9'-0"	—	—	—	—	
109	OPEN OFFICES	CARPET	5	WD	1	—	—	—	—	—	—	GB	2	—	—	GB	2	—	—	GB	2	—	—	TB	5	12'-0"	11'-6"	GB	—	—	
110	MEN	CONCRETE	4	CT	5	—	—	GBW	3	CT	5	GBW	3	CT	5	GBW	3	CT	5	GBW	3	CT	5	GB	3	8'-0"	—	—	—	—	
111	WOMEN	CONCRETE	4	CT	5	—	—	GBW	3	CT	5	GBW	3	CT	5	GBW	3	CT	5	GBW	3	CT	5	GB	3	8'-0"	—	—	—	—	
112	BREAK ROOM	VINYL TILE	5	WD	1	—	—	GB	3	—	—	GB	3	—	—	GB	3	—	—	GB	3	—	—	TB	5	9'-0"	—	—	—	—	
113	POLICE SUB-STATION	CARPET	5	WD	1	—	—	GB	2	—	—	GB	2	—	—	GB	2	—	—	GB	2	—	—	TB	5	9'-0"	—	—	—	—	
114	MEN	CERAMIC TILE	5	CT	5	—	—	GB	3	CT	5	GBW	3	CT	5	GBW	3	CT		GBW	3	CT	5	GB	3	8'-0"	—	—	—	—	
115	WOMEN	CERAMIC TILE	5	CT	5	—	—	GBW	3	CT	5	GBW	3	CT	5	GB	3	CT		GBW	3	CT	5	GB	3	8'-0"	—	—	—	—	
116	PHONE/DATA	CONC.	4	WD	1	—	—	GB	3	—	—	GB	3	—	—	GB	3	—	—	GB	3	—	—	GB	5	8'-0"	—	—	—	—	
117	STORAGE	VINYL TILE	5	WD	1	—	—	GB	2	—	—	GB	2	—	—	GB	2	—	—	GB	2	—	—	TB	5	8'-0"	—	—	—	—	
118	CONFERENCE	CARPET	5	WD	1	—	—	GB	2	—	—	GB	2	—	—	GB	2	—	—	GB	2	—	—	TB	5	8'-0"					
119	OFFICE	CARPET	5	WD	1	—	—	GB	2	—	—	GB	2	—	—	GB	2	—	—	GB	2	—	—	TB	5	8'-0"					
120	OFFICE	CARPET	5	WD	1	—	—	GB	2	—	—	GB	2	—	—	GB	2	—	—	GB	2	—	—	TB	5	8'-0"					
121	MEETING	CARPET	5	WD	1	—	—	GB	2	—	—	GB	2	—	—	GB	2	—	—	GB	2	—	—	TB	5	9'-0"	—	—	—	—	
122	OFFICE	CARPET	5	WD	1	—	—	GB	2	—	—	GB	2	—	—	GB	2	—	—	GB	2	—	—	TB	5	9'-0"	—	—	—	—	
123	OFFICE	CARPET	5	WD	1	—	—	GB	2	—	—	GB	2	—	—	GB	2	—	—	GB	2	—	—	TB	5	9'-0"	—	—	—	—	
124	VESTIBULE	VINYL TILE	5	WD	1	—	—	GB	2	—	—	GB	2	—	—	—	—	—	—	—	—	—	—	TB	5	9'-0"	—	—	—	—	
125	STORAGE	VINYL TILE	5	WD	1	—	—	GB	2	—	—	GB	2	—	—	GB	2	—	—	GB	2	—	—	TB	5	9'-0"	—	—	—	—	
126	MEETING ROOM	VINYL TILE	5	WD	1	—	—	GB	2	—	—	GB	2	—	—	GB	2	—	—	GB	2	—	—	TB	5	16'-0"	15'-6"	GB	23'-0"	GB	
127	JANITOR	VINYL TILE	5	—	—	—	—	GBW	3	—	—	GBW	3	—	—	GB	3	—	—	GB	3	—	—	E.F.	—	—	—	—	—	—	
128	RECEPTION	CARPET	5	WD	1	—	—	GB	2	—	—	—	—	—	—	GB	2	—	—	GB	2	—	—	TB	5	8'-6"	16'-0"	GB	—	—	
129	HALL	CARPET	5	WD	1	—	—			—	—	GB	2	—	—	—	—	—	—	GB	2	—	—	TB	5	9'-0"	—	—	—	—	
130	HALL	CARPET	5	WD	1	—	—	GB	2	—	—	GB	2	—	—	GB	2	—	—	GB	2	—	—	TB	5	9'-0"	—	—	—	—	
131	STORAGE	CONC.	1	—	—	—	—	P.W.	3	—	—	P.W.	3	—	—	P.W.	3	—	—	P.W.	3	—	—	E.F.	—	—	—	—	—	—	
132	OFFICE	CARPET	5	WD	1	—	—	GB	3	—	—	GB	3	—	—	GB	3	—	—	GB	3	—	—	TB	5	9'-0"	—	—	—	—	
133	OFFICE	CARPET	5	WD	1	—	—	GB	2	—	—	GB	2	—	—	GB	2	—	—	GB	2	—	—	TB	5	9'-0"	—	—	—	—	
134	OFFICE	CARPET	5	WD	1	—	—	GB	2	—	—	GB	2	—	—	GB	2	—	—	GB	2	—	—	TB	5	9'-0"	—	—	—	—	
135	OFFICE	CARPET	5	WD	1	—	—	GB	2	—	—	GB	2	—	—	GB	2	—	—	GB	2	—	—	TB	5	9'-0"	—	—	—	—	
136	ALCOVE	CARPET	5	WD	1	—	—	GB	2	—	—	—	—	—	—	GB	2	—	—	GB	2	—	—	TB	5	8'-6"	—	—	—	—	
137	OPEN OFFICES	CARPET	5	WD	1	—	—	GB	2	—	—	GB	2	—	—	GB	2	—	—	—	—	—	—	TB	5	9'-0"	—	—	—	—	
138	RECEPTION	VINYL TILE	5	WD	1	—	—	—	—	—	—	GB	2	—	—	GB	2	—	—	GB	2	—	—	TB	5	9'-0"	—	—	—	—	
139	ENTRY	CONC.	—	—	—	—	—	—	—	—	—	VS	2	PL	2	VS	2	PL	2	—	—	—	—	EF		SLOPE	—	—	—	—	
140	COURT	CONC.	—	—	—	—	—	—	—	—	—	—	—	—	—	—	—	—	—	VS	2	PL	2	—	—	—	PL	5	10'-0"	—	—	—	—	
141	VERANDA	CONC.	—	—	—	—	—	—	—	—	—	—	—	—	—	VS	2	PL	2	—	—	—	—	EF		SLOPE	—	—	—	—	
142	PATIO	CONC.	—	—	—	—	—	VS	2	PL	2	VS	2	PL	2	VS	2	PL	2	—	—	—	—	—	—	—	—	—	—	—	
143	ENTRY	CONC.	—	—	—	—	—	VS	2	PL	2	VS	2	PL	2	VS	2	PL	2	—	—	—	—	—	—	—	—	—	—	—	
144	PATIO	CONC.	—	—	—	—	—	VS	2	PL	2	VS	2	PL	2	—	—	—	—	VS	2	PL	2	EF		10'-0"	—	—	—	—	
145	PATIO	CONC.	—	—	—	—	—	VS	2	PL	2	—	—	—	—	VS	2	PL	2	VS	2	PL	2	EF		8'-0"	—	—	—	—	
146	STORAGE	CONC.	—	—	—	—	—	P.W.	3	—	—	P.W.	3	—	—	P.W.	3	—	—	P.W.	3	—	—	GB	3	10'-0"	—	—	—	—	
147	HALL	VINYL TILE	5	WD	1			GB	5	—	—	GB	2	—	—	GB	2	—	—	GB	2	—	—	GB	2	8'-0"	—	—	—	—	

KROH/BROESKE
ARCHITECTS
6180 BROCKTON AVE.
RIVERSIDE, CA 92506
TEL 909 788-5940
FAX 909 275-0149

Park and Recreation Offices, White Park
3936 CHESTNUT ST.
RIVERSIDE, CALIFORNIA

CONSULTANTS •

NO.	DATE	REVISION
1	5-5-00	PLAN CHECK

LICENSED ARCHITECT JAMES L. BROESKE C009174 Ren 11-30-0 STATE OF CALIFORNIA

THIS DRAWING AND THE DESIGNS, ARRANGEMENTS, DEPICTIONS, IDEAS AND OTHER INFORMATION CONTAINED HEREIN CONSTITUTE UNPUBLISHED WORK OF KROH/BROESKE ARCHITECTS AND SHALL REMAIN PROPERTY OF KROH/BROESKE ARCHITECTS IN PERPETUITY. NO PART THEREOF SHALL BE REPRODUCED, COPIED, DISCLOSED, DISTRIBUTED,SOLD, PUBLISHED OR OTHERWISE USED WITHOUT THE PRIOR WRITTEN CONSENT OF KROH/BROESKE ARCHITECTS. THE SUBMISSION OF THIS DRAWING, OR ANY PART THEREOF, SHALL CONSTITUTE CONCLUSIVE EVIDENCE OF ACCEPTANCE OF THESE RESTRICTIONS.

SHEET TITLE •

FINISH SCHEDULE

DRAWN	•	
CHECKED	•	
SCALE	•	NONE
DATE	•	2-28-00
JOB	•	99008
SHEET	•	

A-6.1

DOOR SCHEDULE

		SIZE		DOOR				FRAME		DETAILS					
NO.	TYPE	W	H	THICK.	MATERIAL	FIN.	GLASS	MAT.	FIN.	HEAD	STRIKE	HINGE	SILL	HDWR.	REMARKS
①	A	6'-0"	7'-0"	1 3/4"	WD.	2	TMPR.	WD.	2					PANIC, S.C.	PAIR
②	A	6'-0"	7'-0"	1 3/4"	WD.	2	TMPR.	WD.	2					PANIC, S.C.	PAIR
③	D	3'-0"	7'-0"	1 3/4"	WD.	2	—	ALUM.	4					—	
④	D	3'-0"	7'-0"	1 3/4"	WD.	2	—	✳ ALUM.	4					S.C.	✳SEE WINDOW SCHEDULE FOR SIDE LIGHT & FRAME
⑤	E	9'-0"	9'-0"	—	STL.	4	—	STL.	3					—	STEEL ROLL UP
⑥	D	3'-0"	7'-0"	1 3/4"	WD.	2	—	ALUM.	4					—	
⑦	D	3'-0"	7'-0"	1 3/4"	WD.	2	—	ALUM.	4					—	
⑧	D	3'-0"	7'-0"	1 3/4"	WD.	2	—	✳ ALUM.	4					S.C.	✳SEE WINDOW SCHEDULE FOR SIDE LIGHT & FRAME
⑨	A	6'-0"	7'-0"	1 3/4"	WD.	2	TMPR.	ALUM.	4						PAIR
⑩	D	3'-0"	7'-0"	1 3/4"	WD.	2	—	ALUM.	4					S.C.	
⑪	D	3'-0"	7'-0"	1 3/4"	WD.	2	—	✳ ALUM.	4					S.C.	✳SEE WINDOW SCHEDULE FOR SIDE LIGHT & FRAME
⑫	D	3'-0"	7'-0"	1 3/4"	WD.	2	—	ALUM.	4					S.C.	
⑬	D	3'-0"	7'-0"	1 3/4"	WD.	2	—	ALUM.	4					—	
⑭	D	3'-0"	7'-0"	1 3/4"	WD.	2	—	ALUM.	4					S.C.	
⑮	A	6'-0"	7'-0"	1 3/4"	WD.	2	TMPR.	WD.	2					S.C.	PAIR
⑯	D	3'-0"	7'-0"	1 3/4"	WD.	2	—	ALUM.	4					—	
⑰	D	3'-0"	7'-0"	1 3/4"	WD.	2	—	✳ ALUM.	4					S.C.	✳SEE WINDOW SCHEDULE FOR SIDE LIGHT & FRAME
⑱	D	3'-0"	7'-0"	1 3/4"	WD.	2	—	ALUM.	4					—	
⑲	A	6'-0"	7'-0"	1 3/4"	WD.	2	TMPR.	WD.	2					PANIC, S.C.	PAIR
⑳	D	6'-0"	7'-0"	1 3/4"	WD.	2	—	ALUM.	4					PANIC	PAIR
㉑	D	3'-0"	7'-0"	1 3/4"	WD.	2	—	ALUM.	4					—	
㉒	D	3'-0"	7'-0"	1 3/4"	WD.	2	—	ALUM.	4					—	
㉓	D	3'-0"	7'-0"	1 3/4"	WD.	2	—	ALUM.	4					—	
㉔	A	3'-0"	7'-0"	1 3/4"	WD.	2	TMPR.	WD.	2					PANIC, S.C.	
㉕	A	3'-0"	7'-0"	1 3/4"	WD.	2	—	WD.	2					PANIC, S.C.	
㉖	B	6'-0"	7'-0"	1 3/4"	WD.	2	—	WD.	2					—	PAIR / METAL LOUVERS
㉗	D	3'-0"	7'-0"	1 3/4"	WD.	2	—	ALUM.	4					—	
㉘	D	3'-0"	7'-0"	1 3/4"	WD.	2	—	ALUM.	4					—	
㉙	D	3'-0"	7'-0"	1 3/4"	WD.	2	—	ALUM.	4					—	
㉚	D	3'-0"	7'-0"	1 3/4"	WD.	2	—	ALUM.	4					—	
㉛	A	3'-0"	7'-0"	1 3/4"	WD.	2	TMPR.	✳ WD.	2					PANIC, S.C.	ALARM
㉜	D	3'-0"	7'-0"	1 3/4"	WD.	2	—	ALUM.	4					—	
㉝	D	3'-0"	7'-0"	1 3/4"	WD.	2	—	ALUM.	4					—	
㉞	D	6'-0"	7'-0"	1 3/4"	WD.	2	—	ALUM.	4					—	PAIR
㉟	D	3'-0"	7'-0"	1 3/4"	WD.	2	—	ALUM.	4					—	
㊱	D	3'-0"	7'-0"	1 3/4"	WD.	2		✳ ALUM.						—	✳SEE WINDOW SCHEDULE FOR SIDE LIGHT & FRAME
㊲	B	3'-0"	7'-0"	1 3/4"	WD.	2	—	WD.	2					—	METAL LOUVERS
㊳	B	3'-0"	7'-0"	1 3/4"	WD.	2	—	WD.	2					—	METAL LOUVERS
㊴	D	3'-0"	7'-0"	1 3/4"	WD.	2	—	ALUM.	4					—	
㊵	B	6'-0"	7'-0"	1 3/4"	WD.	2	—	WD.	2					—	PAIR / METAL LOUVERS
㊶	E	9'-0"	7'-0"	—	STL.	3	—	STL.	3					—	STEEL ROLL UP
㊷	C	3'-0"	4'-0"	1 3/4"	WD.	2	—	WD.	2					—	
㊸	D	2'-8"	6'-8"	1 3/4"	H.M.	2	—	H.M.	4					—	REUSE EXISTING H.METAL FRAME(REPAINT)
㊹	F	8'-0"	7'-0"	—	WD.	3	—	WD.	3					—	WOOD GARAGE DOOR
㊺	F	8'-0"	7'-0"	—	WD.	3	—	WD.	3					—	WOOD GARAGE DOOR
㊻	F	8'-0"	7'-0"	—	WD.	3	—	WD.	3					—	WOOD GARAGE DOOR
㊼															
㊽															
㊾															
㊿															

Exit doors shall be openable from the inside without use of a key or any special knowledge or effort. Title 24, Section 1004.3
Width and height of required exit doorways to comply with Title 24, Section 1003.2.

WINDOW SCHEDULE

		SIZE		GLASS			FRAME		DETAILS					✳ = TEMPERED AS REQUIRED BY CODE
NO.	TYPE	WIDTH	HEIGHT	THICK.	FIN.	TEMP.	MAT.	FIN.	HEAD	JAMB	MULL.	JAMB	SILL	REMARKS
Ⓐ	1	6'-0"	3'-8"	1/4"	TNT.	✳	WOOD	3						
Ⓑ	2	3'-0"	7'-0"	1/4"	TNT.	✳	WOOD	3						MATCH AND ALIGN W/ ADJACENT FRENCH DOOR
Ⓒ	2	6'-0" PAIR	7'-0"	1/4"	TNT.	✳	WOOD	3						MATCH AND ALIGN W/ ADJACENT FRENCH DOOR (DOUBLE)
Ⓓ	3	1'-6"	7'-0"	1/4"	TNT.	✳	ALUM.	4						
Ⓔ	1	6'-0"	2'-0"	1/4"	TNT.	✳	WOOD	3						
Ⓕ	4	6'-0"	3'-0"	1/4"	CLR	✳	ALUM.	4						HORZ. SLIDER. (PASS-THRUE) SEE INTERIOR ELEV.
Ⓖ	2	1'-6"	7'-0"	1/4"	TNT.	✳	WOOD	3						MATCH AND ALIGN W/ ADJACENT FRENCH DOOR
Ⓗ	1	4'-0"	2'-0"	1/4"	TNT.	✳	WOOD	3						
Ⓙ	1	4'-0"	3'-0"	1/4"	TNT.	✳	WOOD	3						

WINDOW TYPES

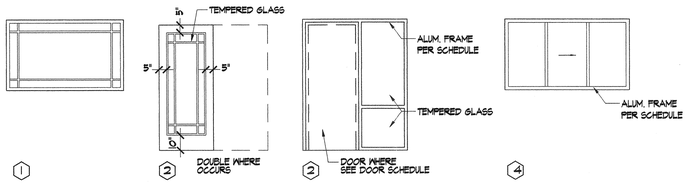

DOOR TYPES

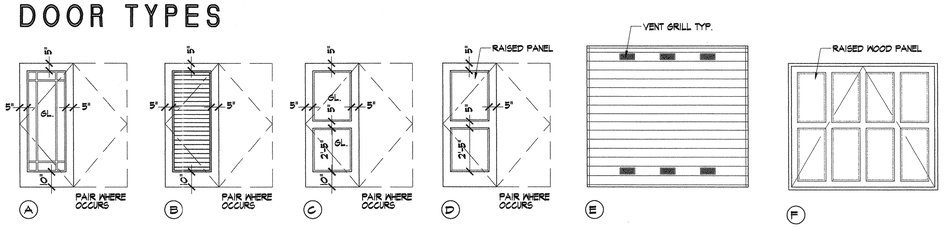

DOOR FINISHES

1. STAIN AND SEAL
2. FACTORY PAINT - SATING FINISH
3. FACTORY PAINT - SEMI-GLOSS
4. FACTORY PAINT - ENAMEL

ABBREVIATIONS

CLR. -1/4" CLEAR GLASS
TNT. -1/4" GRAY TINTED GLASS
TMPR. -1/4" TINTED, TEMPERED
D.F. - CLEAR VERTICAL GRAIN
WD. - WOOD/SOLID CORE
P.W. - PAINT GRADE WOOD
S.C. - SELF CLOSER
STL. - STEEL
H.M. - HALOW METAL (STEEL)

WINDOW FINISHES

1. STAIN AND SEAL
2. FACTORY PAINT - SATIN FINISH
3. FACTORY PAINT -SEMI-GLOSS
4. FACTORY PAINT - ENAMEL

KROH/BROESKE
ARCHITECTS
6180 BROCKTON AVE.
RIVERSIDE, CA 92506
TEL 909 788-5940
FAX 909 275-0149

Park and Recreation Offices, White Park
3936 CHESTNUT ST.
RIVERSIDE, CALIFORNIA

CONSULTANTS •

NO.	DATE	REVISION
1	5-5-00	PLAN CHECK

LICENSED ARCHITECT JAMES L. BROESKE No. C009174 Ren 11-30-01 STATE OF CALIFORNIA

THIS DRAWING AND THE DESIGNS, ARRANGEMENTS, DEPICTIONS, IDEAS AND OTHER INFORMATION CONTAINED HEREIN CONSTITUTE UNPUBLISHED WORK OF KROH/BROESKE ARCHITECTS AND SHALL REMAIN PROPERTY OF KROH/BROESKE ARCHITECTS IN PERPETUITY. NO PART THEREOF SHALL BE REPRODUCED, COPIED, DISCLOSED, DISTRIBUTED,SOLD, PUBLISHED OR OTHERWISE USED IN ANYWAY WITHOUT THE ADVANCE EXPRESS WRITTEN CONSENT OF KROH/BROESKE ARCHITECTS. VISUAL CONTACT WITH THE ABOVE DRAWINGS, OR ANY PART THEREOF, SHALL CONSTITUTE CONCLUSIVE EVIDENCE OF ACCEPTANCE OF THESE RESTRICTIONS.

SHEET TITLE •

DOOR & WINDOW SCHEDULES

DRAWN	•
CHECKED	•
SCALE	• NONE
DATE	• 2-28-00
JOB	• 99008
SHEET	•

A-6.2

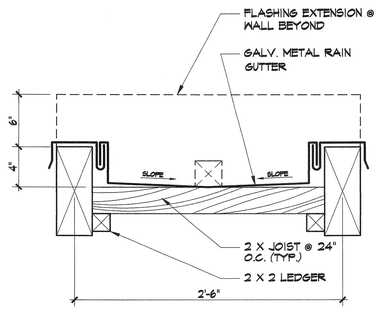

RAIN GUTTER | SCALE | 17

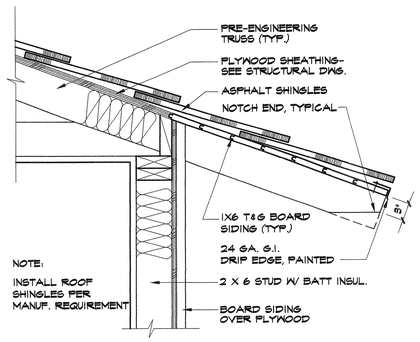

TYP. ROOF EAVE | SCALE 1"=1'-0" | 13

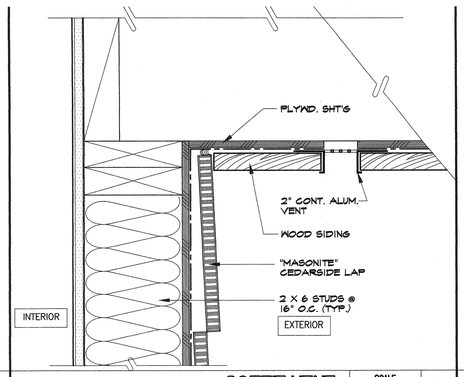

SOFFIT VENT | SCALE | 9

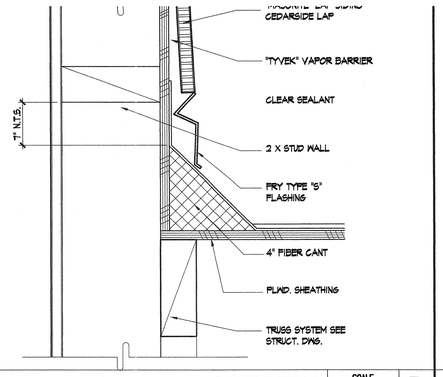

CANT DETAIL | SCALE 3"=1'-0" | 5

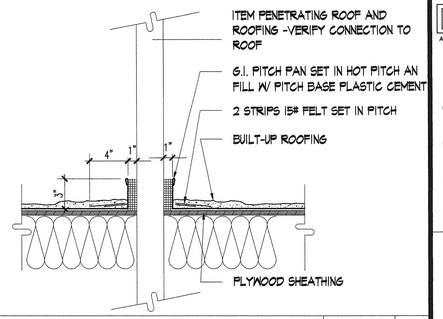

ROOF PENETRATION | SCALE | 1

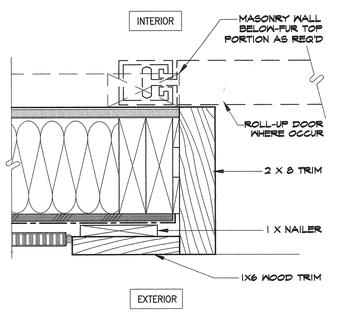

ROLL-UP DOOR JAMB | SCALE | 18

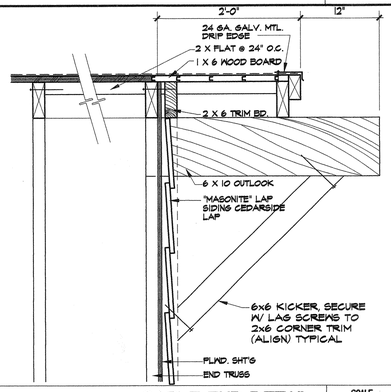

GABLE END DETAIL | SCALE 1"=1'-0" | 14

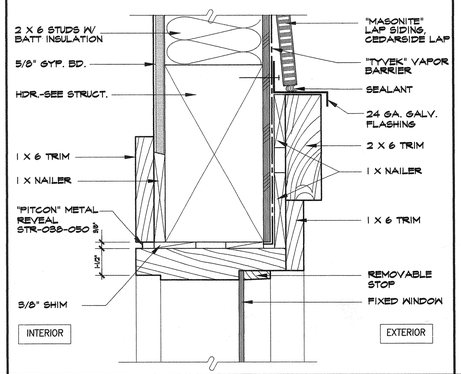

WINDOW HEAD DETAIL | SCALE | 10

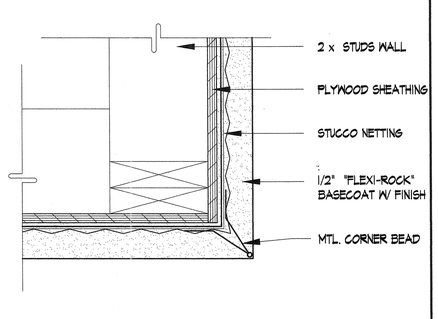

SQUARE NOSE MTL. | SCALE | 6

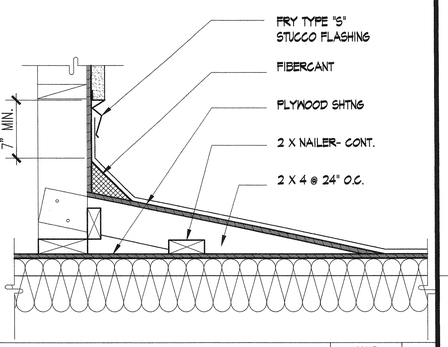

PLYWOOD CRICKET | SCALE | 2

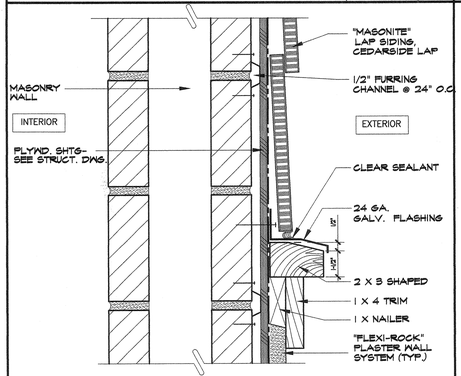

WAINSCOT AT MASONRY WALL | SCALE | 19

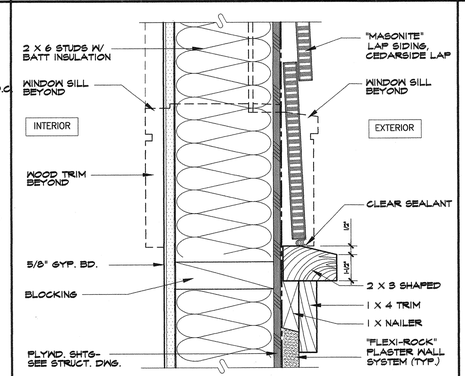

TYP. BLDG. WAINSCOT | SCALE | 15

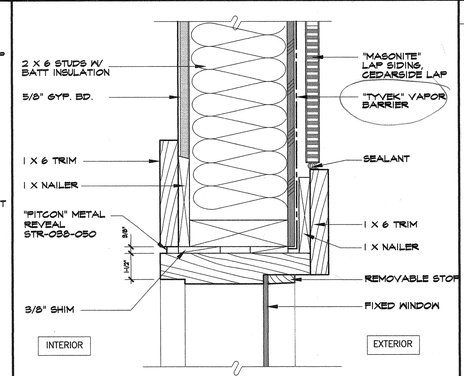

WINDOW JAMB DETAIL | SCALE | 11

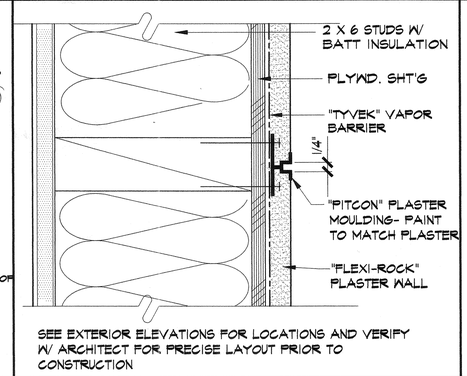

SEE EXTERIOR ELEVATIONS FOR LOCATIONS AND VERIFY W/ ARCHITECT FOR PRECISE LAYOUT PRIOR TO CONSTRUCTION

EXTERIOR PLASTER REVEAL | SCALE | 7

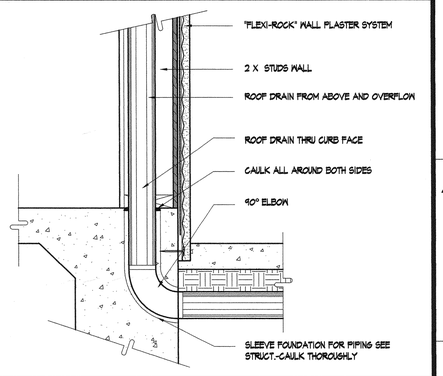

DRAIN AT EXTERIOR WALL | SCALE | 1 1/2"=1'-0" | 3

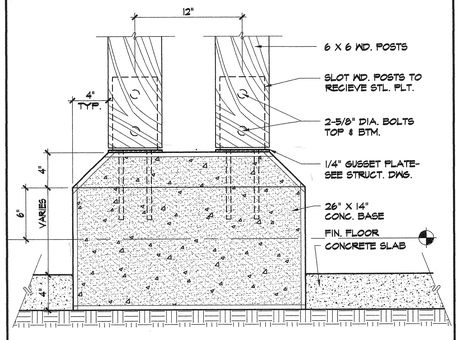

CONCRETE COLUMN BASE | SCALE 1 1/2"=1'-0" | 20

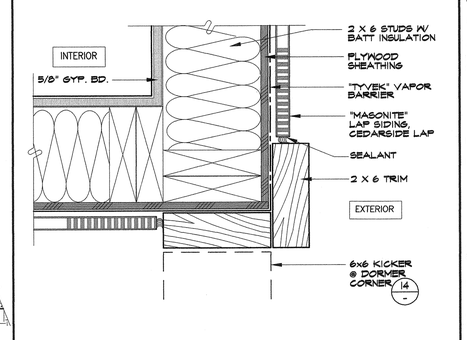

CORNER TRIM DETAIL | SCALE | 16

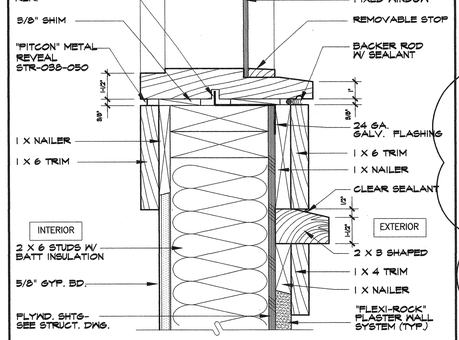

WINDOW SILL DETAIL | SCALE | 12

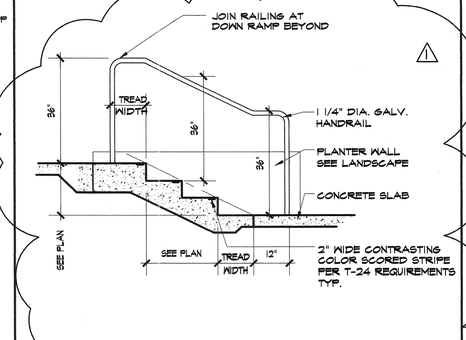

CONCRETE STEPS | SCALE | 8

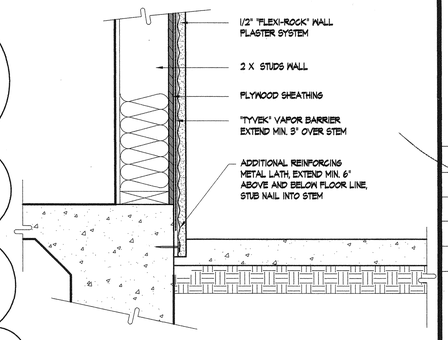

COVERED STEM DETAIL | SCALE 1 1/2"=1'-0" | 4

KROH/BROESKE
ARCHITECTS
6180 BROCKTON AVE.
RIVERSIDE, CA 92506
TEL 909 788-5940
FAX 909 275-0149

Park and Recreation Offices, White Park
3936 CHESTNUT ST.
RIVERSIDE, CALIFORNIA

CONSULTANTS •

NO.	DATE	REVISION
1	5-5-00	PLAN CHECK

LICENSED ARCHITECT JAMES L. BROESKE No. C009174 Ren 11-30-01 STATE OF CALIFORNIA

THIS DRAWING AND THE DESIGNS, ARRANGEMENTS, DEPICTIONS, IDEAS AND OTHER INFORMATION CONTAINED HEREIN CONSTITUTE UNPUBLISHED WORK OF KROH/BROESKE ARCHITECTS AND SHALL REMAIN PROPERTY OF KROH/BROESKE ARCHITECTS IN PERPETUITY. NO PART THEREOF SHALL BE REPRODUCED, COPIED, DISCLOSED, DISTRIBUTED/SOLD, PUBLISHED OR OTHERWISE USED IN ANYWAY WITHOUT THE ADVANCE EXPRESS WRITTEN CONSENT OF KROH/BROESKE ARCHITECTS. VISUAL CONTACT WITH THE ABOVE DRAWINGS, OR ANY PART THEREOF, SHALL CONSTITUTE CONCLUSIVE EVIDENCE OF ACCEPTANCE OF THESE RESTRICTIONS.

SHEET TITLE •

DETAILS

DRAWN	SJP
CHECKED	
SCALE	AS SHOWN
DATE	02/28/00
JOB	99008
SHEET	

A-7.1

Thu Jun 01 10:07:07 2000

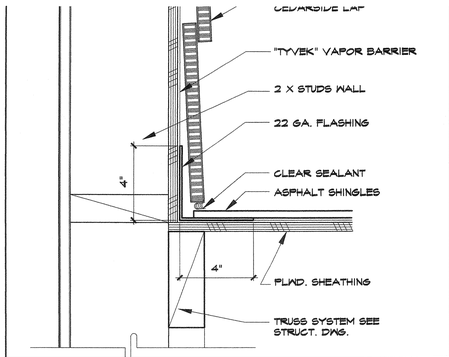

FLASHING DETAIL

SCALE 3"=1'-0" | 16

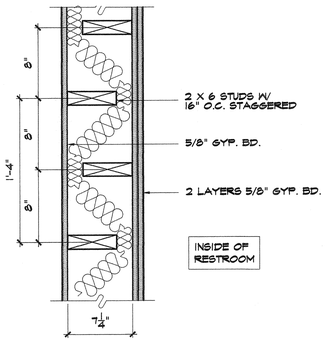

SOUND WALL

SCALE 1 1/2"=1'-0" | 12

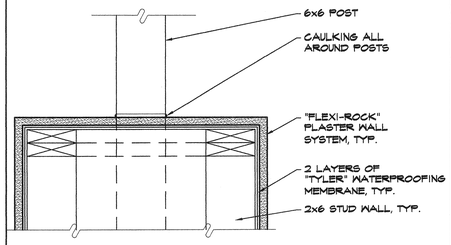

POST CONNECTION

SCALE 1 1/2"=1'-0" | 17

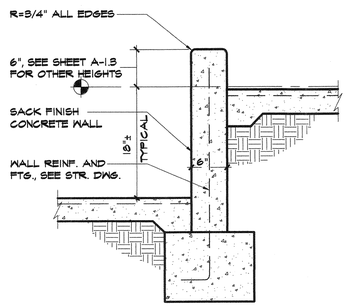

STEM WALL

SCALE 1"=1'-0" | 13

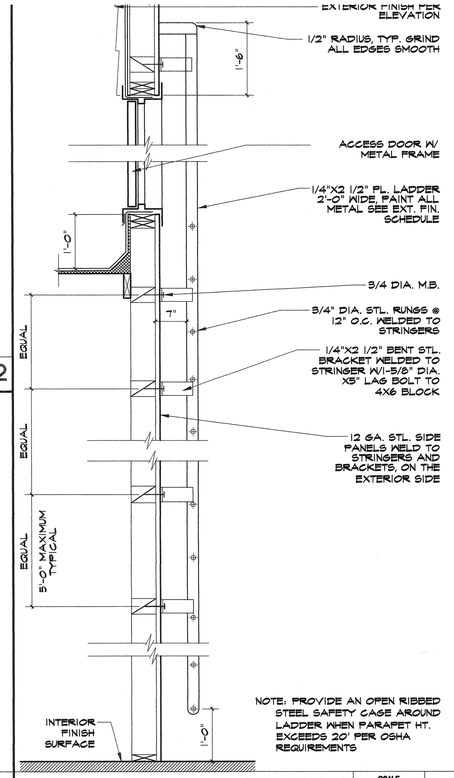

ACCESS LADDER

SCALE 9

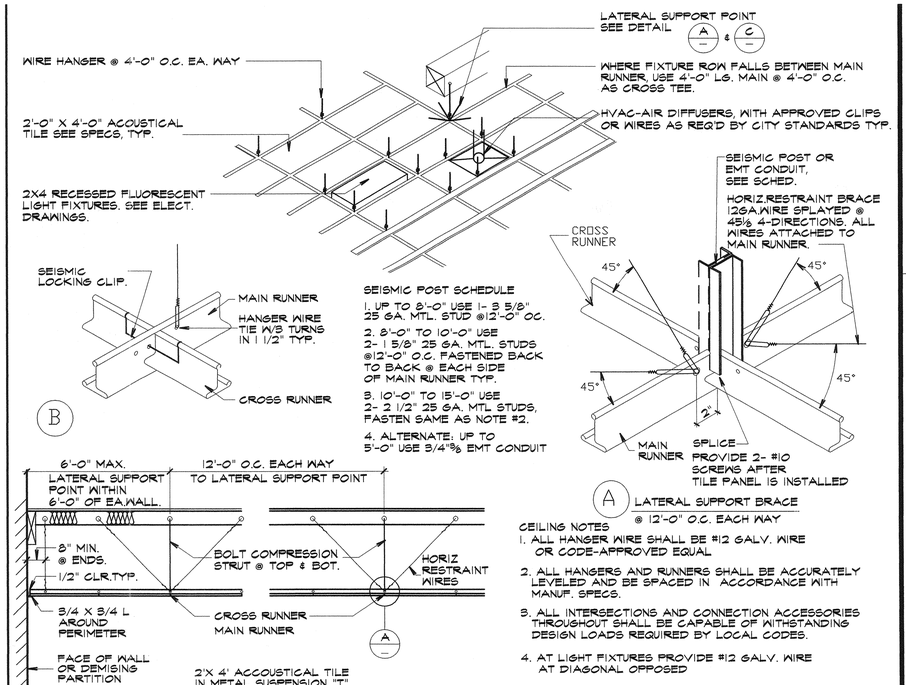

SEISMIC POST SCHEDULE

1. UP TO 8'-0" USE 1- 3 5/8" 25 GA. MTL. STUD @12'-0" OC.
2. 8'-0" TO 10'-0" USE 2- 1 5/8" 25 GA. MTL. STUDS @12'-0" O.C. FASTENED BACK TO BACK @ EACH SIDE OF MAIN RUNNER TYP.
3. 10'-0" TO 15'-0" USE 2- 2 1/2" 25 GA. MTL STUDS, FASTEN SAME AS NOTE #2.
4. ALTERNATE: UP TO 5'-0" USE 3/4"⅝ EMT CONDUIT

CEILING NOTES

1. ALL HANGER WIRE SHALL BE #12 GALV. WIRE OR CODE-APPROVED EQUAL
2. ALL HANGERS AND RUNNERS SHALL BE ACCURATELY LEVELED AND BE SPACED IN ACCORDANCE WITH MANUF. SPECS.
3. ALL INTERSECTIONS AND CONNECTION ACCESSORIES THROUGHOUT SHALL BE CAPABLE OF WITHSTANDING DESIGN LOADS REQUIRED BY LOCAL CODES.
4. AT LIGHT FIXTURES PROVIDE #12 GALV. WIRE AT DIAGONAL OPPOSED
5. SEE ELECTRICAL DRAWINGS AND REFLECTED CEILING PLANS FOR LOCATIONS AND DIRECTIONS OF LIGHT FIXTURES (DESIGN BUILD)

T-BAR CEILING

SCALE 2

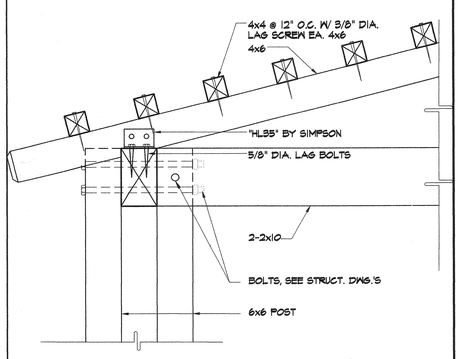

FRAMING DETAIL

SCALE 1"=1'-0" | 18

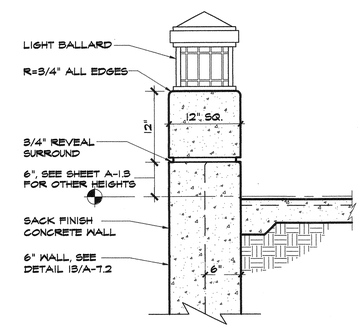

STEM WALL

SCALE 1"=1'-0" | 14

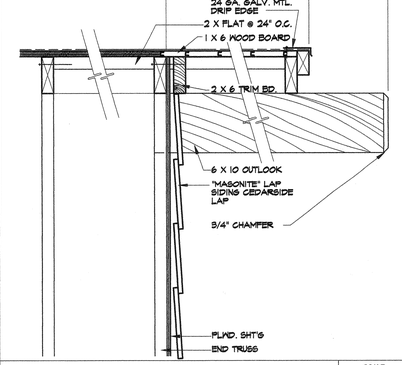

GABLE END DETAIL

SCALE 1"=1'-0" | 10

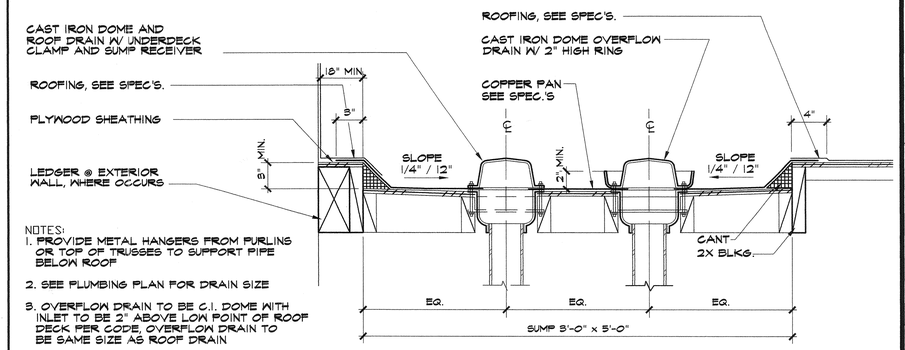

NOTES:

1. PROVIDE METAL HANGERS FROM PURLINS OR TOP OF TRUSSES TO SUPPORT PIPE BELOW ROOF
2. SEE PLUMBING PLAN FOR DRAIN SIZE
3. OVERFLOW DRAIN TO BE C.I. DOME WITH INLET TO BE 2" ABOVE LOW POINT OF ROOF DECK PER CODE, OVERFLOW DRAIN TO BE SAME SIZE AS ROOF DRAIN

ROOF DRAIN & OVERFLOW

SCALE 1 1/2"=1'-0" | 3

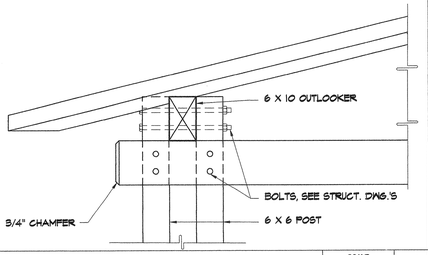

FRAMING DETAIL

SCALE 3/4"=1'-0" | 19

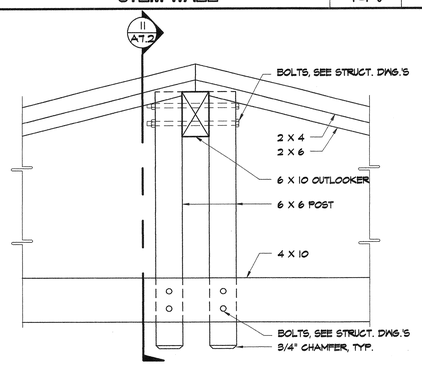

FRAMING DETAIL

SCALE 3/4"=1'-0" | 15

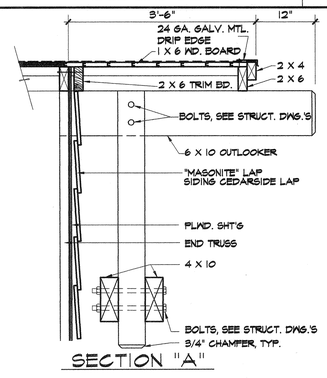

SECTION "A"

FRAMING DETAIL

SCALE 3/4"=1'-0" | 11

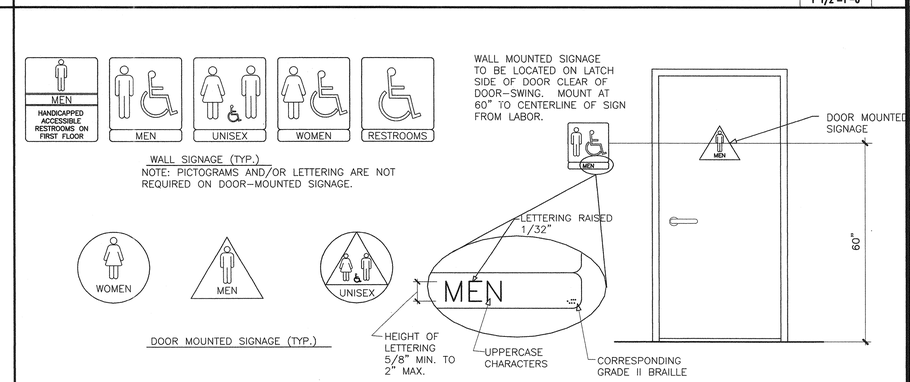

RESTROOMS DOOR SYMBOLS

SCALE 4

KROH/BROESKE
ARCHITECTS
6180 BROCKTON AVE.
RIVERSIDE, CA 92506
TEL 909 788-5940
FAX 909 275-0149

Park and Recreation Offices, White Park
3936 CHESTNUT ST.
RIVERSIDE, CALIFORNIA

CONSULTANTS •

NO.	DATE	REVISION
1	5-5-00	PLAN CHECK

LICENSED ARCHITECT JAMES L. BROESKE No. C009174 Ren 11-30-01 STATE OF CALIFORNIA

THIS DRAWING AND THE DESIGNS, ARRANGEMENTS, DEPICTIONS, IDEAS AND OTHER INFORMATION CONTAINED HEREIN CONSTITUTE UNPUBLISHED WORK OF KROH/BROESKE ARCHITECTS AND SHALL REMAIN PROPERTY OF KROH/BROESKE ARCHITECTS IN PERPETUITY. NO PART THEREOF SHALL BE REPRODUCED, COPIED, DISCLOSED, FILED OR DISTRIBUTED, PUBLISHED OR OTHERWISE USED IN ANYWAY WITHOUT THE ADVANCE WRITTEN PERMISSION OF KROH/BROESKE ARCHITECTS. VISUAL CONTACT WITH THE ABOVE DRAWINGS OR ANY PART THEREOF, SHALL CONSTITUTE CONCLUSIVE EVIDENCE OF ACCEPTANCE OF THESE RESTRICTIONS.

SHEET TITLE •

DETAILS

DRAWN	•	SJP
CHECKED	•	
SCALE	•	AS SHOWN
DATE	•	03/30/00
JOB	•	99008
SHEET	•	

A-7.2

SCALE 17

SCALE 13

CABINET DETAIL

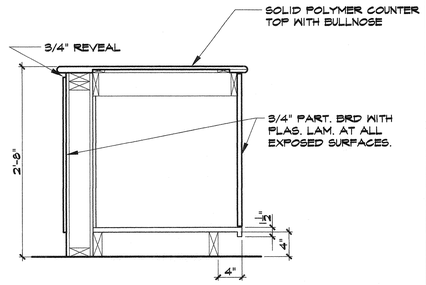

SCALE 1"=1'-0" 9

LATTICE • BM/POST

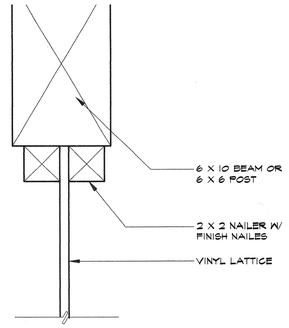

SCALE 3" = 1'-0" 5

TYPICAL WINDOW SILL/HEAD

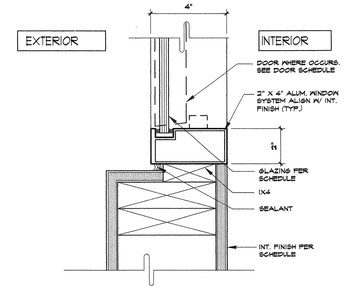

SCALE 3" = 1'-0" 1

SCALE 18

SCALE 14

SCALE 10

LATTICE • CMU WALL

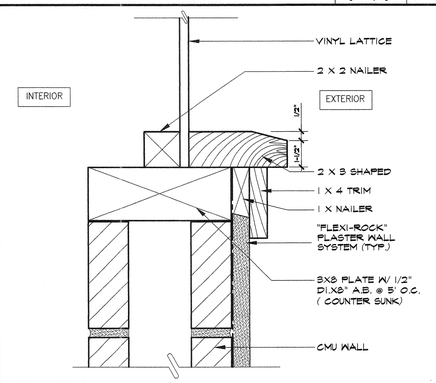

SCALE 3" = 1'-0" 6

HORIZONTAL MULLION

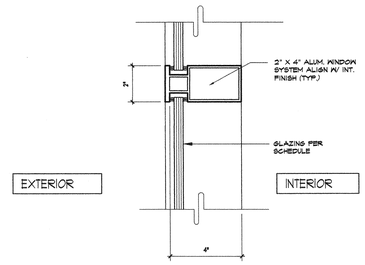

SCALE 3" = 1'-0" 2

SCALE 19

SCALE 15

SCALE 11

SCALE 3" = 1'-0" 7

SILL

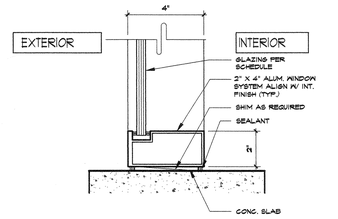

SCALE 3" = 1'-0" 3

SCALE 20

SCALE 16

SCALE 12

CABINET DETAIL

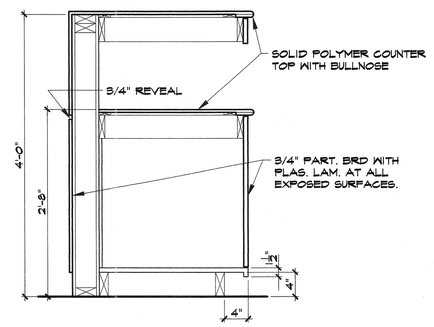

SCALE 1"=1'-0" 8

GYP. BD. CEILING

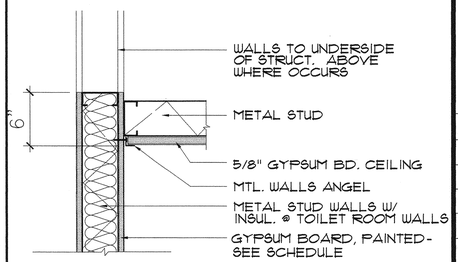

SCALE 3" = 1'-0" 4

KROH/BROESKE
ARCHITECTS

6180 BROCKTON AVE.

RIVERSIDE, CA 92506

TEL 909 788-5940

FAX 909 275-0149

Park and Recreation Offices, White Park

3936 CHESTNUT ST.
RIVERSIDE, CALIFORNIA

CONSULTANTS •

NO.	DATE	REVISION
1	5-5-00	PLAN CHECK

LICENSED ARCHITECT
JAMES L. BROESKE
No. C009174
Ren 11-30-00
STATE OF CALIFORNIA

THIS DRAWING AND THE DESIGNS, ARRANGEMENTS, DEPICTIONS, IDEAS AND OTHER INFORMATION CONTAINED HEREIN CONSTITUTE UNPUBLISHED WORK OF KROH/BROESKE ARCHITECTS AND SHALL REMAIN PROPERTY OF KROH/BROESKE ARCHITECTS IN PERPETUITY. NO PART THEREOF SHALL BE REPRODUCED, COPIED, DISCLOSED, DISTRIBUTED/SOLD, PUBLISHED OR OTHERWISE USED IN ANYWAY WITHOUT THE ADVANCE EXPRESS WRITTEN CONSENT OF KROH/BROESKE ARCHITECTS. VISUAL CONTACT WITH THE ABOVE DRAWINGS, OR ANY PART THEREOF, SHALL CONSTITUTE CONCLUSIVE EVIDENCE OF ACCEPTANCE OF THESE RESTRICTIONS.

SHEET TITLE •

DETAILS

DRAWN	•
CHECKED	•
SCALE	• AS SHOWN
DATE	• 04/30/98
JOB	• 99008
SHEET	•

A-7.3

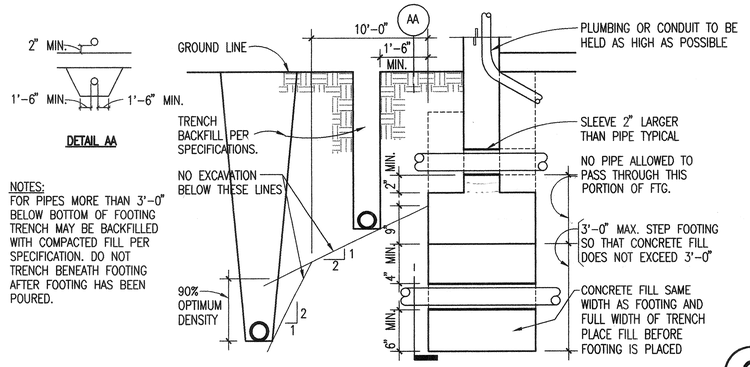

TYPICAL PIPE AND TRENCH DETAIL (6)

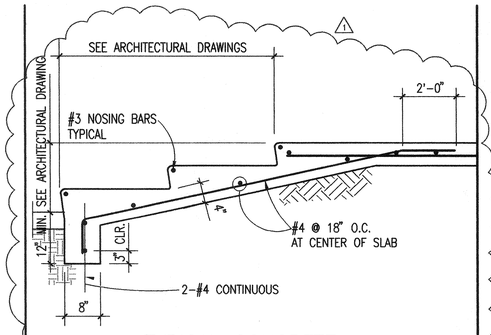

TYPICAL CONCRETE STAIR ON GRADE DETAIL (2)

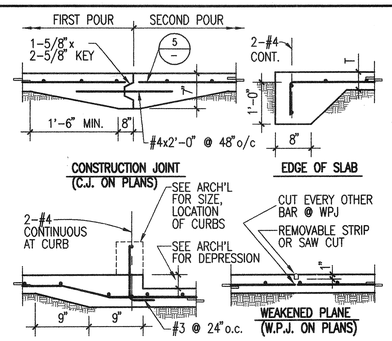

TYP. SLAB ON GRADE DETAILS (11)

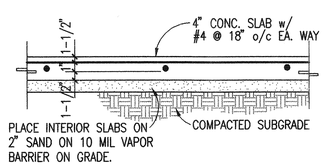

TYPICAL SLAB ON GRADE (7)

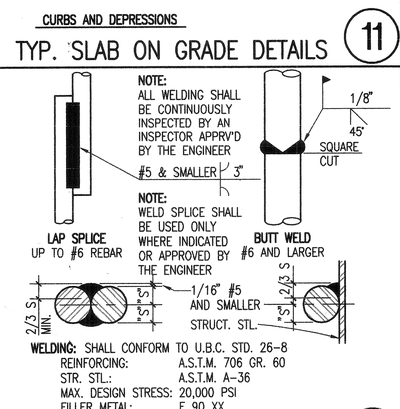

TYP. REINF. BAR DETAILS (13)

TYP. WELDED REINF. SPLICE (12)

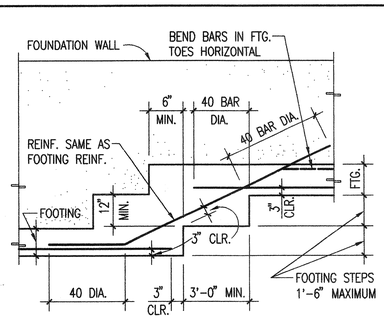

TYPICAL STEPPED FOOTING DETAIL (8)

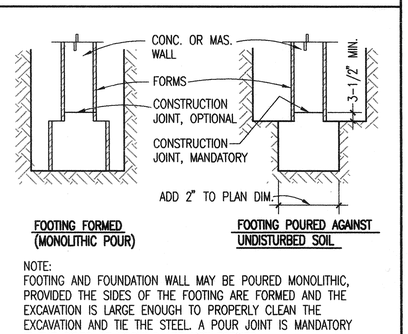

NOTE:
FOOTING AND FOUNDATION WALL MAY BE POURED MONOLITHIC, PROVIDED THE SIDES OF THE FOOTING ARE FORMED AND THE EXCAVATION IS LARGE ENOUGH TO PROPERLY CLEAN THE EXCAVATION AND TIE THE STEEL. A POUR JOINT IS MANDATORY IF THE SIDES OF FOOTING ARE NOT FORMED.

TYPICAL FOUNDATION FORMING DETAIL (4)

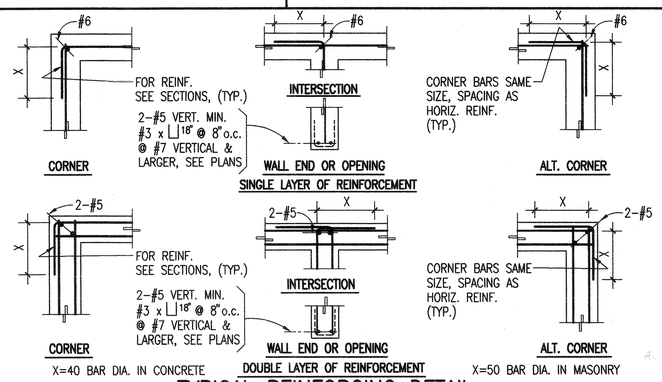

TYPICAL REINFORCING DETAIL (WALLS, BEAMS, FDN's ETC.) (5)

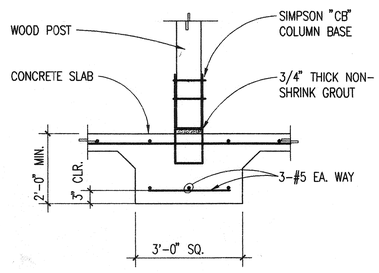

TYPICAL POST BASE DETAIL (1)

LEGEND

ø	– DIAMETER	MATL.	– MATERIAL
℄	– CENTER LINE	MAX.	– MAXIMUM
ℙ	– PLATE (STEEL)	M.B.	– MACHINE BOLT
A.B.	– ANCHOR BOLT	MECH.	– MECHANICAL
BLK.	– BLOCK	MIN.	– MINIMUM
BLKG.	– BLOCKING	(N)	– NEW
BM.	– BEAM	N.G.	– NATURAL GRADE
B.N.	– BOUNDARY NAILING	N.T.S.	– NOT TO SCALE
BOTT.	– BOTTOM	O.C.	– O/C ON CENTER
C.B.	– CARRIAGE BOLT	OPNG.	– OPENING
CLR.	– CLEAR	PERP.	– PERPENDICULAR
C.J.	– COLD JOINT (CONST. JOINT)	P.J.	– POUR JOINT
		P.J.P.	– PARTIAL JOINT PENETRATION
C.J.P.	– COMPLETE JOINT PENETRATION	PLT.	– PLATE (WOOD)
COL.	– COLUMN	PLYWD.	– PLYWOOD
CONC.	– CONCRETE	P.T.	– PRESSURE TREATED
CONN.	– CONNECTION	REINF.	– REINFORCING
CONST.	– CONSTRUCTION	REM.	– REMAINDER
CONT.	– CONTINUOUS	REQD.	– REQUIRED
C.P.E.	– CONT. PANEL EDGES	RF.	– ROOF.
DBL.	– DOUBLE	S.A.	– STUD ANCHOR
DIA.	– DIAMETER	SCHED.	– SCHEDULE
DO.	– DITTO	SHPD.	– SHAPED
DWG.	– DRAWING	SHT.	– SHEET
EA.	– EACH	SHTG.	– SHEATHING
ELEV.	– ELEVATION	SIM.	– SIMILAR
(E)	– EXISTING	S.M.	– SHEET METAL
E.J.	– EXPANSION JOINT	SQ.	– SQUARE
E.N.	– EDGE NAILING	STAGG.	– STAGGER
EQ.	– EQUAL	STD.	– STANDARD
EXT.	– EXTERIOR	STIFF.	– STIFFNER
F.G.	– FINISH GRADE	STL.	– STEEL
FLR.	– FLOOR	THK.	– THICK
F.N.	– FIELD NAILING	T.O.C.	– TOP OF CONCRETE
F.O.C.	– FACE OF CONCRETE	T.O.M.	– TOP OF MASONRY
F.O.M.	– FACE OF MASONRY	T.O.P.	– TOP OF PLYWOOD
F.O.S.	– FACE OF STUD	T.O.S.	– TOP OF STEEL
FRMG.	– FRAMING	T.O.W.	– TOP OF WALL
FDN.	– FOUNDATION	T.P.	– TOP OF PARAPET
FTG.	– FOOTING	T.S.	– TUBE STEEL
GALV.	– GALVANIZED	TYP.	– TYPICAL
GA.	– GAUGE	U.N.O.	– UNLESS NOTED OTHERWISE
G.L.B.	– GLUE LAMINATED BEAM		
GYP. BD.	– GYPSUM BOARD	VERT.	– VERTICAL
HORIZ.	– HORIZONTAL	W/	– WITH
H.S.B.	– HIGH STRENGTH BOLT	WD.	– WOOD
HT.	– HEIGHT	W.P.J.	– WEAKENED PLANE JOINT
JST.	– JOIST	W.W.F.	– WELDED WIRE FABRIC
LT.WT.	– LIGHTWEIGHT		
MAS.	– MASONRY		

DETAIL NUMBER / SHEET NUMBER
POURED CONCRETE
MASONRY
STEP FOOTING
BOT. OF FTG. EL.
WALL ELEVATION NUMBER / SHEET NUMBER
WOOD MEMBER CONTINUOUS
WOOD MEMBER BLOCKING
FINISH FLOOR LINE
MOMENT CONNECTION

GENERAL NOTES

GENERAL:
1. FRAMING CONDITIONS NOT SPECIFICALLY SHOWN SHALL BE FRAMED SIMILAR TO DETAILS SHOWN FOR THE RESPECTIVE MATERIALS.
2. ALL CONSTRUCTION SHALL CONFORM TO THE 1997 UNIFORM BUILDING CODE AND ALL APPLICABLE LOCAL ORDINANCES. ⚠1
3. CONTRACTOR SHALL VERIFY ALL DIMENSIONS BEFORE STARTING WORK. THE ARCHITECT SHALL BE NOTIFIED OF ANY DISCREPANCIES.
4. NOTWITHSTANDING ANY REFERENCE IN THE CONSTRUCTION DOCUMENTS TO ANY RULE OR REGULATION, THE STRUCTURAL ENGINEER IS NOT ASSUMING ANY DUTY TO PROVIDE SUPERVISION OF CONSTRUCTION METHODS OR PROCESSES.

INSPECTION:
1. CONTINUOUS INSPECTION BY A REGISTERED DEPUTY BUILDING INSPECTOR EMPLOYED BY THE TESTING LABORATORY SHALL BE PROVIDED FOR ALL CONCRETE OVER 2500 PSI (EXCEPT SLAB ON GRADE.)
2. ALL WELDS SHALL BE INSPECTED. PROVIDE CONT. INSPECTION FOR FULL PENETRATION WELDS AND WELDING OF REINFORCING. THE INSPECTOR SHALL BE AN APPROVED LAB INSPECTOR. FULL PENETRATION WELDS SHALL BE SUBJECTED TO ULTRASONIC INSPECTION.
3. THE SOILS ENGINEER SHALL INSPECT THE PREPARING AND PLACING OF ALL FILL BELOW BUILDINGS AND PAVING.

FOUNDATIONS:
1. REFER TO SOIL INVESTIGATION BY, JOHN R. BYERLY INC. REPORT No. 7443 DATED: JAN. 17, 2000 ⚠1
2. ALL FILL SHALL BE COMPACTED TO A MINIMUM OF 90% IN ACCORDANCE WITH THE PROCEDURE OUTLINED IN THE SPECIFICATIONS.
3. MAXIMUM SOIL PRESSURE: 2000 P.S.F. ⚠1
4. TYPE OF SOIL: SILTY FINE SAND
5. FOOTINGS SHALL BE CARRIED A MINIMUM OF 18" BELOW FINISH GRADE.
6. ALL EXCAVATIONS SHALL BE INSPECTED AND APPROVED BY THE SOILS ENGINEER PRIOR TO FORMING AND PLACING REINFORCING STEEL.
7. ALL FOOTINGS & SLABS SHALL BEAR ON A COMPACTED FILL MATERIAL SEE SOIL REPORT & SPECIFICATIONS.
8. PRIOR TO CONTRACTOR REQUESTING A BUILDING DEPARTMENT FOUNDATION INSPECTION, THE SOILS ENGINEER SHALL ADVISE THE BUILDING OFFICIAL IN WRITING THAT:
   A) THE BUILDING PAD WAS PREPARED IN ACCORDANCE WITH THE SOILS REPORT
   B) THE UTILITY TRENCHES HAVE BEEN PROPERLY BACKFILLED AND COMPACTED, AND
   C) THE FOUNDATION EXCAVATIONS COMPLY WITH THE INTENT OF SOILS REPORT
9. SURFACE WATER SHALL DRAIN AWAY FROM BUILDING
10. HOLDOWN ANCHORS MUST BE TIED IN PLACE PRIOR TO FOUNDATION INSPECTION

CONCRETE:
1. THE 28-DAY STRENGTH AND TYPE OF CONCRETE SHALL BE AS FOLLOWS: ⚠1
   SLABS ON GRADE----------2500 P.S.I.----150 P.C.F.
   FOOTINGS----------2500 P.S.I.----150 P.C.F.
2. AGGREGATES: NATURAL SAND AND ROCK------A.S.T.M. C-33
   LIGHTWEIGHT------A.S.T.M. C-330
3. CEMENT: PORTLAND CEMENT, TYPE I OR II,
   LOW ALKALI----------A.S.T.M. C-150
4. NO PIPE OR DUCTS SHALL BE PLACED IN CONCRETE UNLESS SPECIFICALLY DETAILED.
5. REINF., DOWELS, ANCHOR BOLTS, INSERTS, ETC., SHALL BE SECURELY TIED IN PLACE PRIOR TO POURING OF CONCRETE OR GROUT.

REINFORCING:
1. TYPICAL REINFORCING----A.S.T.M. A-615--------GRADE 60
   STIRRUPS, TIES, SLABS ON GRADE AND
   NON-STRUCT ITEMS-----A.S.T.M. A-615--------GRADE 40
   REINFORCING TO BE WELDED SHALL BE A.S.T.M. A-706 GR. 60
2. REINFORCING FABRIC---------- A.S.T.M. A-185
3. LAP ALL BARS A MINIMUM OF 40-BAR DIAMETERS IN CONCRETE AND 50 BAR DIAMETERS IN MASONRY. (2'-0" MINIMUM) U.N.O.
4. SPLICES OF ALL HORIZONTAL REINFORCING SHALL BE STAGGERED.
5. COLUMN AND WALL DOWELS SHALL BE SAME SIZE AND SPACING AS COLUMN OR WALL REINFORCING.
6. MINIMUM CONCRETE COVERAGE:
   THE FOLLOWING MINIMUM COVERAGE SHALL BE MAINTAINED UNLESS NOTED OTHERWISE:
   SLABS ON GRADE----------CENTER OF SLAB
   CAST AGAINST & EXPOSED TO EARTH----------3"
   FORMED, EXPOSED TO EARTH AND WEATHER;
   #6 AND LARGER----------2"
   #5 AND SMALLER------1 1/2"
   NOT EXPOSED TO EARTH OR WEATHER:
   SLABS, WALLS, JOISTS---#14 & #18----------1 1/2"
   #11 AND SMALLER-------3/4"
   BEAMS, GIRDERS, COLUMNS----------1 1/2"
7. WELDING OF REINFORCING STEEL----------U.B.C. STD. 26.8 LOW HYDROGEN

KROH/BROESKE ARCHITECTS
6180 BROCKTON AVE.
RIVERSIDE, CA 92506
TEL 909 788-5940
FAX 909 276-0149

PARK AND RECREATION OFFICES, WHITE PARK
3969 CHESTNUT ST.
RIVERSIDE, CALIFORNIA

CONSULTANTS
JOHNSON & NIELSEN ASSOCIATES CONSULTING STRUCTURAL ENGINEERS
647 N. Main St. Suite 4B, Riverside CA. 92501 (909)686-5122

REGISTERED PROFESSIONAL ENGINEER PER RON No. 1174 Exp. Date 3-31-01 STRUCTURAL STATE OF CALIFORNIA

NO.	DATE	REVISION
⚠1	5/5/00	PLAN CHECK CORRECTION

LICENSED ARCHITECT JAMES L. BROESKE C009174 Ren 11-30-01 STATE OF CALIFORNIA

THIS DRAWING AND THE DESIGNS, ARRANGEMENTS, DEPICTIONS, IDEAS AND OTHER INFORMATION CONTAINED HEREIN CONSTITUTE UNPUBLISHED WORK OF KROH/BROESKE ARCHITECTS AND SHALL REMAIN PROPERTY OF KROH/BROESKE ARCHITECTS IN PERPETUITY. NO PART THEREOF SHALL BE REPRODUCED, COPIED, DISCLOSED, DISTRIBUTED/SOLD, PUBLISHED OR OTHERWISE USED IN ANYWAY WITHOUT THE EXPRESS, EXPRESS WRITTEN CONSENT OF KROH/BROESKE ARCHITECTS. VISUAL CONTACT WITH THE ABOVE DRAWINGS, OR ANY PART THEREOF, SHALL CONSTITUTE CONCLUSIVE EVIDENCE OF ACCEPTANCE OF THESE RESTRICTIONS.

SHEET TITLE

DRAWN	D.R.
CHECKED	PER
SCALE	
DATE	2-28-00
JOB	99008
SHEET	S0-1

28-209
AutoDATE: 02/28/2000 13:02

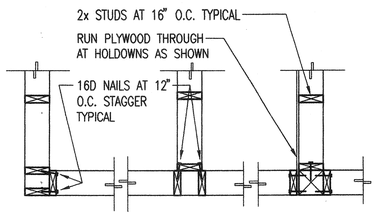

NOTE: PROVIDE REQUIRED POST WHERE HOLDOWN ANCHORS OCCUR

TYPICAL STUD WALL CONNECTIONS (12)

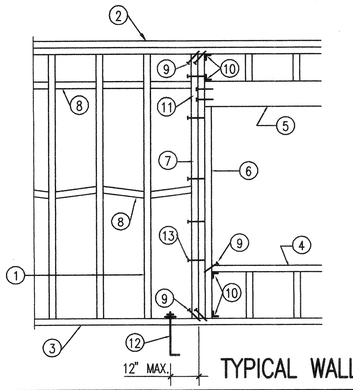

1. 2x STUDS @ 16" O.C.
2. DOUBLE TOP PLATES
3. SILL PLATES
4. 2x SILL... 2- 2x WHERE OPENING IS GREATER THAN 6'-0"
5. LINTEL SEE SCHEDULE THIS SHEET
6. 2x CRIPPLE... 2-2x CRIPPLES WHERE OPENING IS GREATER THAN 8'-0".
7. 2-2x KING STUD... 1-2x AT NON-BEARING WALLS.
8. 2x BLOCKING @ 8'-0" O.C. MAX. & AT CLG. LINES.
9. 2-10d TOENAILS EACH 2x
10. SIMPSON A35
11. 2-16d PLUS 1-16d FOR EACH 2" OF LINTEL DEPTH
12. SILL BOLTS SEE (3/-)
13. 16d @ 12" O.C.

HEADER SCHEDULE	
SIZE	MAX. OPENING
6X6	6'-0"
6X8	8'-0"
6X10	10'-0"
6X12	12'-0"
NOTE: WHERE 6" STUDS ARE USED, USE 6X HEADER	

TYPICAL WALL FRAMING (4)

LINTEL SCHEDULE	
MAX. OPENING WIDTH	LINTEL SIZE
4'-0"	STUD WIDTH x 4" DEPTH
6'-0"	STUD WIDTH x 6" DEPTH
8'-0"	STUD WIDTH x 8" DEPTH
10'-0"	STUD WIDTH x 10" DEPTH
12'-0"	STUD WIDTH x 12" DEPTH
LINTELS IN SCHEDULE TO BE USED FOR ALL OPENINGS UNLESS OTHERWISE SHOWN ON DRAWINGS.	

CEILING JOIST SCHEDULE				
SIZE	SPACING	MAX. SPAN PLASTER	MAX. SPAN GYP. BD.	SIMPSON HANGER
2x4	16" o.c.	8'-0"	10'-0"	LU24
2x6	16" o.c.	12'-4"	15'-0"	LU26
2x8	16" o.c.	16'-6"	20'-0"	LU28

LUMBER:

1. ALL STRUCTURAL SAWN LUMBER SHALL BE DOUGLAS FIR-LARCH OF THE FOLLOWING GRADES, UNLESS NOTED OTHERWISE:
   2X2, 2X3, 3X3 & 3X4 ---------- NO 2, Fb = 1300 PSI
   2X6, 3X6, & 4X6 ---------- NO 1, Fb = 1300 PSI
   2X8, 3X8, & 4X8 ---------- NO 1, Fb = 1200 PSI
   2X10, 3X10, & 4X10 ---------- NO 1, Fb = 1100 PSI
   2X12, 3X12, & 4X12 ---------- NO 1, Fb = 1000 PSI
   2X14, 3X14, & 4X14 ---------- NO 1, Fb = 900 PSI
   ALL SIZES OF 6X ------ SELECT STRUCT. Fb = 1500 PSI
   SILL PLATES-HEM FIR (WOLMANIZED)-COMMERCIAL, Fb = 1150 PSI
2. ALL STRUCTURAL LUMBER SHALL BE GRADED IN ACCORDANCE WITH GRADING AND DRESSING RULES #17 OF THE WEST COAST INSPECTION BUREAU.
   ALL WOOD BEARING ON CONCRETE OR MASONRY SHALL BE
3. PRESSURE TREATED HEM-FIR, ALL FIELD CUTS SHALL BE FIELD TREATED BY AWPA METHOD H-84. ALL WOOD SHALL BE @ LEAST 6" FROM FINISH GRADE.
4. STRUCTURAL MEMBERS SHALL NOT BE CUT FOR PIPES, ETC., UNLESS SPECIFICALLY DETAILED OR NOTED.
5. 2" SOLID BLOCKING SHALL BE PLACED BETWEEN JOISTS OR RAFTERS AT ALL SUPPORTS.
6. CROSS BRIDGING SHALL BE PROVIDED 8'-0" o.c. MAXIMUM FOR ALL ROOF JOISTS OR RAFTERS MORE THAN 8" IN DEPTH. & ALL FLOOR JOISTS MORE THAN 4" IN DEPTH USE 2X3 OR AN APPROVED TYPE OF METAL BRIDGING.
7. PLYWOOD USED ON ROOF & SHEAR WALLS SHALL BE GRADE MARKED STRUCTURAL 1-PS 1-83.
8. NOTCH ALL JOISTS AND RAFTERS, AS REQUIRED, FOR FULL BEARING ON JOIST HANGERS & PLATES, MINIMIZE WOOD REMOVAL AND OVER CUTTING.
9. BOLTS, ASTM A-307, WITH STANDARD CUT WASHERS BETWEEN WOOD, NUTS & BOLT HEADS (USE MALLEABLE IRON WASHERS WHERE BOLTS ARE IN TENSION.)
10. HOLES FOR BOLTS SHALL BE BORED 1/32" TO 1/16" LARGER THAN THE NOMINAL BOLT DIAMETER.
11. RETIGHTEN ALL BOLTS JUST PRIOR TO BEING INCLOSED.
12. MACHINE APPLIED NAILING:
    USE OF MACHINE APPLIED NAILING IS SUBJECT TO SATISFACTORY JOB SITE DEMOSTRATION FOR EACH PROJECT AND THE APPROVAL BY THE PROJECT ARCHITECT OR STRUCTURAL ENGINEER AND THE OFFICE OF THE STATE ARCHITECT. THE APPROVAL IS SUBJECT TO CONTINUED SATISFACTORY PERFORMANCE. MACHINE NAILING WILL NOT BE APPROVED IN 5/16" PLYWOOD. IF NAILHEADS PENETRATE THE OUTER PLY MORE THAN WOULD BE NORMAL FOR A HAND HAMMER OR IF MINIMUM ALLOWABLE EDGE DISTANCES ARE NOT MAINTAINED THE PERFORMANCE WILL BE DEEMED UNSATISFACTORY.

NAILING SCHEDULE:
(ALL NAILS SHALL BE COMMON, GALVANIZED WHERE EXPOSED)

1. JOISTS OR RAFTERS TO SIDE OF STUDS 8" JOISTS OR LESS----------3-16d
   FOR EACH ADDITIONAL OF 4" OF DEPTH----------1-16d
2. BRIDGING TO JOIST, TOENAIL EACH END---------- 2-8d
   A. BLOCKING BETWEEN JOISTS OR RAFTERS - TO JOISTS OR RAFTERS - TOENAILS EACH SIDE, EACH END---------- 2-10d
   B. BLOCKING BETWEEN STUDS, EACH END----------2-10d TOENAILS OR 2-16d
3. 1"x6" SUBFLOOR OR LESS TO EACH JOIST, FACE NAIL---2-8d
4. WIDER THAN 1"x6" SUBFLOOR TO EACH JOIST, FACE NAIL----------3-8d
5. 2" SUBFLOOR TO JOIST OR GIRDER, BLIND AND FACE NAIL----------2-16d
6. SOLE PLATE TO JOIST OR BLOCKING, FACE NAIL----------16d @ 16"o.c.
7. TOP PLATE TO STUD, END NAIL---------- 2-16d
8. STUD TO SOLE PLATE---------- 4-8, TOENAIL OR 2-16d, END NAIL
9. DOUBLE STUDS, FACE NAIL----------16d @ 24"o.c.
10. DOUBLED TOP PLATES, FACE NAIL----------16d @ 16"o.c.
11. TOP PLATES, LAPS AND INTERSECTIONS, FACE NAIL----- 2-16d
12. 16d @ 16"o.c. ALONG EACH EDGE
13. CEILING JOISTS TO PLATE, TOENAIL---------- 3-8d
14. CONTINUOUS HEADER TO STUD, TOENAIL----------4-8d
15. CEILING JOISTS, LAPS OVER PARTITIONS, FACE NAIL-----3-16d
16. CEILING JOISTS TO PARALLEL RAFTERS, FACE NAIL---- 3-16d
17. JOIST OR RAFTERS AT ALL BEARINGS - TOENAILS, EACH SIDE---------- 2-10d
18. 1" BRACE TO EACH STUD AND PLATE, FACE NAIL-----2-8d
19. 1"x8" SHEATHING OR LESS TO EACH BEARING, FACE NAIL----------2-8d
20. WIDER THAN 1"x8" SHEATHING TO EACH BEARING, FACE NAIL----------3-8d
21. BUILT UP CORNER STUDS----------16d @ 24"o.c.

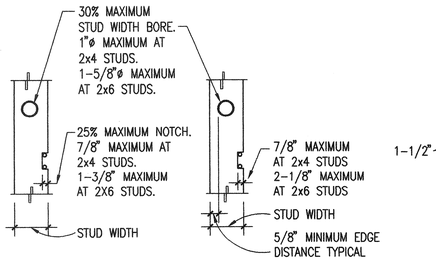

NOTES: 1. NOTCH AND BORED HOLE NOT TO OCCUR IN THE SAME STUD SECTION.
2. ALL BORED HOLES SHALL BE AT CENTER OF STUDS.

EXTERIOR AND BEARING STUDS | INTERIOR NON-BEARING STUDS

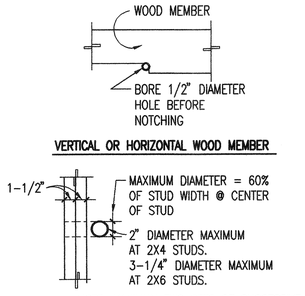

VERTICAL OR HORIZONTAL WOOD MEMBER

NOTE: MAXIMUM TWO SETS OF SUCCESSIVE BORED STUDS MAY BE USED.

INTERIOR NON-BEARING DOUBLE STUDS

TYPICAL NOTCHING AND BORING OF STUDS AND BEAMS (9)

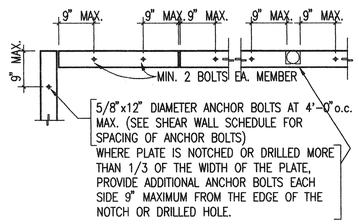

TYPICAL SILL ANCHOR BOLTS PLACING DETAIL (5)

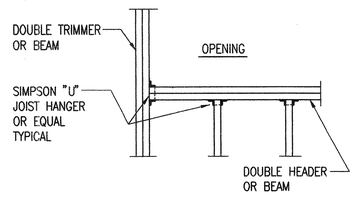

TYPICAL JOIST AND RAFTER FRAMING AT OPENING (1)

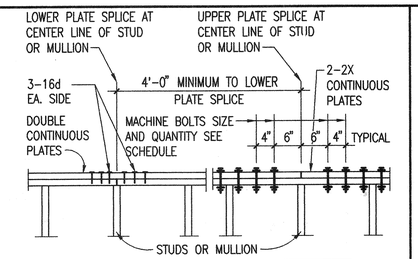

PLATE SPLICE SCHEDULE		
A	2-7/8"ø BOLTS EACH SIDE OF SPLICE JOINT	2.2k
B	3-7/8"ø BOLTS EACH SIDE OF SPLICE JOINT	3.3k
C	4-7/8"ø BOLTS EACH SIDE OF SPLICE JOINT	4.4k
D	5-7/8"ø BOLTS EACH SIDE OF SPLICE JOINT	5.5k

W1NT701

TYPICAL PLATE SPLICE DETAIL (14)

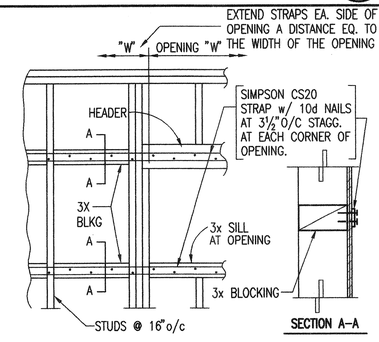

OPENING REINFORCING AT SHEAR WALLS (10)

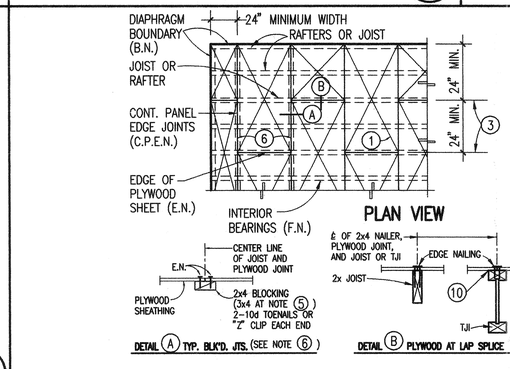

TYPICAL PLYWOOD SHEATHING (2)

NOTES:
1. 3/4"PLYWOOD CDX STRUCTURAL I U.N.O.
2. RUN LONG DIMENSION OF PLYWOOD SHEETS ACROSS (PERPENDICULAR TO) JOISTS OR RAFTERS.
3. STAGGER PLYWOOD END JOINTS 24" MIN.
4. FRAMING TO BE ON A 4'-0" MODULE TO COINCIDE WITH THE PLYWOOD PATTERN.
5. FRAMING SHALL BE 3x OR WIDER & NAILS STAGGERED WHERE NAILS ARE SPACED 2", 2½" OR 3" O.C.
6. BLOCK EDGE JOINTS ONLY WHERE CALLED FOR ON FLOOR OR ROOF PLANS. SEE DETAIL (A) BELOW.
7. FOR PLYWOOD THICKNESS, GRADE, NAILING AND AND BLOCKING SEE FLOOR OR ROOF FRAMING PLANS.
8. MINIMUM NAILING: U.N.O. SEE ROOF PLANS
   B.N.--10d @ 6" O.C. AT DIAPHRAGM BOUNDARY, CONT. PLATE LINES, CHORDS, TIES AND AS NOTED.
   C.P.E.N.--USE B.N. WHERE CONT. PLYWD EDGES ARE BLOCKED.
   E.N.--10d @ 6" O.C. AT ALL BEARING ENDS AND EDGES OF EACH PLYWOOD SHEET.
   F.N.--10d @ 12" O.C. (ROOF) 10d @ 10" O.C. (FLOOR) AT ALL INTERIOR BEARINGS OF PLYWOOD SHEETS.
9. NAILS SHALL HAVE A MIN. 3/8" EDGE DISTANCE.
10. GLUE PLYWOOD TO TJI

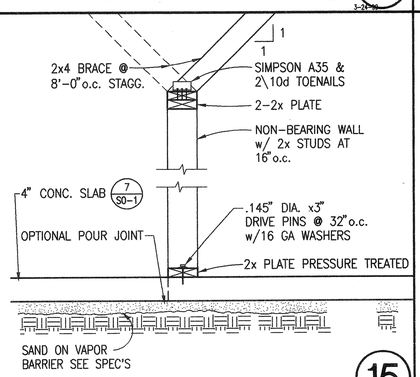

TYPICAL NON BEARING WALL (15)

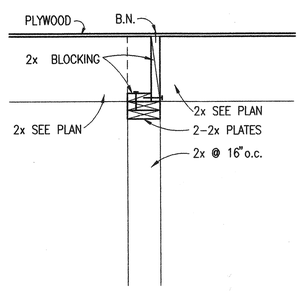

(11)

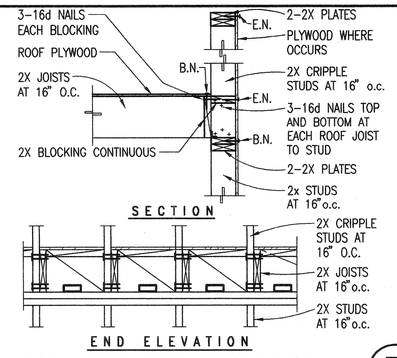

TYPICAL ROOF JOISTS PERPENDICULAR TO PLATFORM FRAME STUD WALL DETAIL (7)

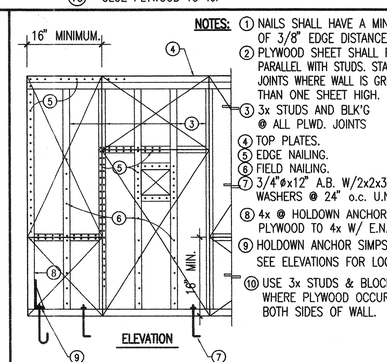

NOTES:
1. NAILS SHALL HAVE A MIN. OF 3/8" EDGE DISTANCE.
2. PLYWOOD SHEET SHALL RUN PARALLEL WITH STUDS. STAGGER JOINTS WHERE WALL IS GREATER THAN ONE SHEET HIGH.
3. 3x STUDS AND BLK'G @ ALL PLWD. JOINTS
4. TOP PLATES.
5. EDGE NAILING.
6. FIELD NAILING.
7. 3/4"ø x12" A.B. W/2x2x3/16 WASHERS @ 24" o.c. U.N.O.
8. 4x @ HOLDOWN ANCHORS, NAIL PLYWOOD TO 4x W/ E.N.
9. HOLDOWN ANCHOR SIMPSON HTT16 SEE ELEVATIONS FOR LOCATION
10. USE 3x STUDS & BLOCKING WHERE PLYWOOD OCCURS ON BOTH SIDES OF WALL.

TYPICAL 3/8" CDX PLYWOOD SHEAR PANEL DETAIL (3)

KROH/BROESKE ARCHITECTURE
6180 BROCKTON AVE.
RIVERSIDE, CA 92506
TEL 909 788-5940
FAX 909 275-0149

PARK AND RECREATION OFFICES, WHITE PARK
3969 CHESTNUT ST.
RIVERSIDE, CALIFORNIA

CONSULTANTS
JN JOHNSON & NIELSEN ASSOCIATES CONSULTING STRUCTURAL ENGINEERS
647 N. Main St. Suite 4E, Riverside CA. 92501 (909)688-5122

REGISTERED PROFESSIONAL ENGINEER — PER RON No. 1174 Exp. Date 3-31-01 — STRUCTURAL — STATE OF CALIFORNIA

NO.	DATE	REVISION

LICENSED ARCHITECT — JAMES L. BROESKE — No. C009174 — Ren 11-30-01 — STATE OF CALIFORNIA

THIS DRAWING AND THE DESIGNS, ARRANGEMENTS, DEPICTIONS, IDEAS AND OTHER INFORMATION CONTAINED HEREIN CONSTITUTE UNPUBLISHED WORK OF KROH/BROESKE ARCHITECTS AND SHALL REMAIN PROPERTY OF KROH/BROESKE ARCHITECTS IN PERPETUITY. NO PART THEREOF SHALL BE REPRODUCED, COPIED, DISCLOSED, DISTRIBUTED/USED, PUBLISHED OR OTHERWISE USED IN ANYWAY WITHOUT THE ADVANCE EXPRESS WRITTEN CONSENT OF KROH/BROESKE ARCHITECTS. VISUAL CONTACT WITH THE ABOVE DRAWINGS, OR ANY PART THEREOF, SHALL CONSTITUTE CONCLUSIVE EVIDENCE OF ACCEPTANCE OF THESE RESTRICTIONS.

SHEET TITLE

DRAWN	D.R.
CHECKED	PER
SCALE	
DATE	2-28-00
JOB	99008
SHEET	S0-2

28-209
AutoDATE: 02/28/2000 13:02

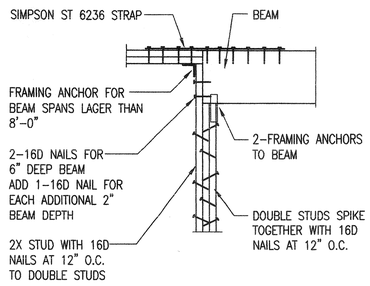

TYPICAL BEAM PARALLEL TO WALL DETAIL (21)

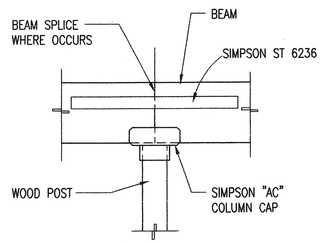

TYPICAL BEAM TO POST DETAIL (17) W1WD100

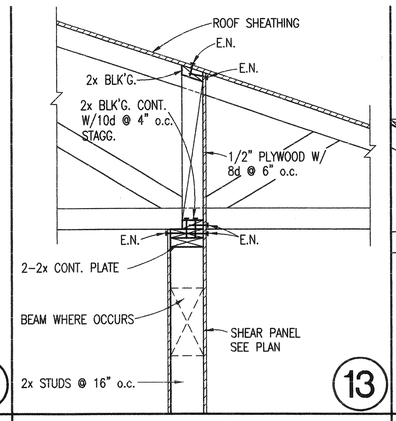

(13)

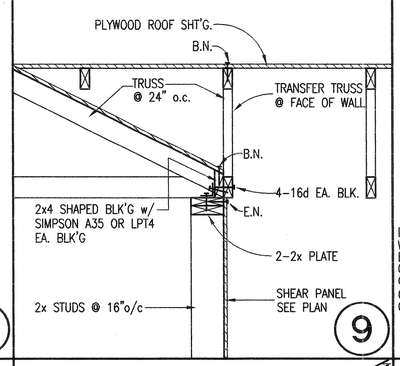

(9)

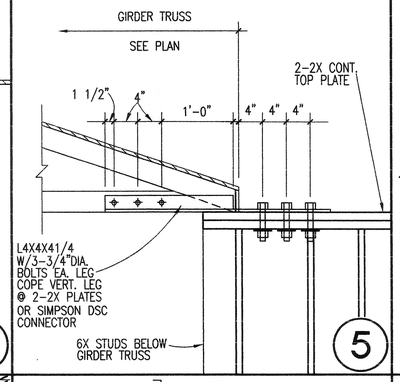

(5)

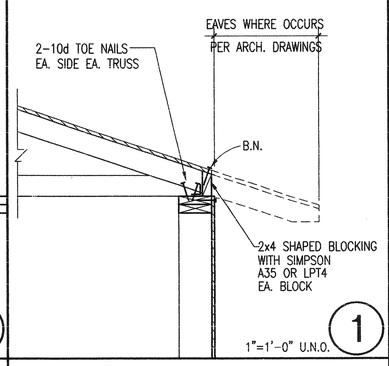

(1)

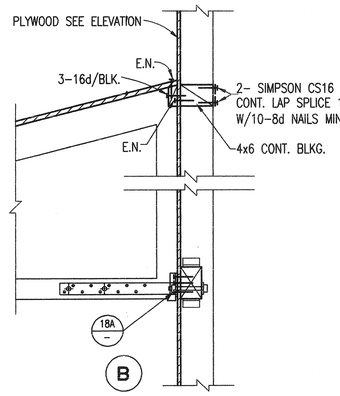

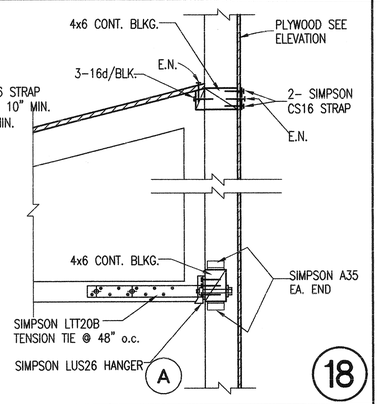

(18)

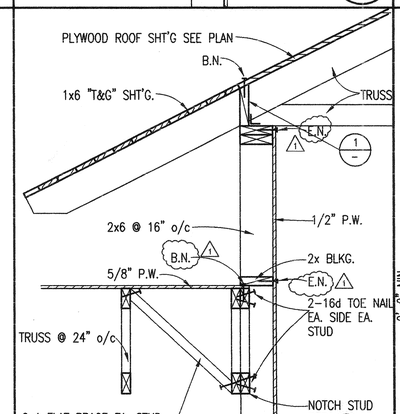

(11)

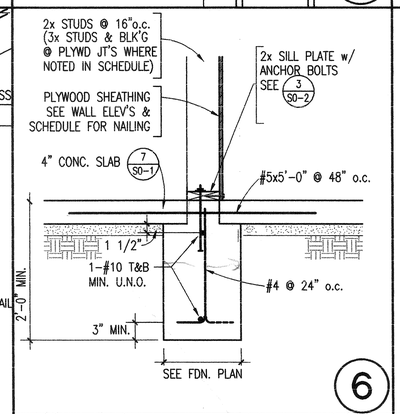

(6)

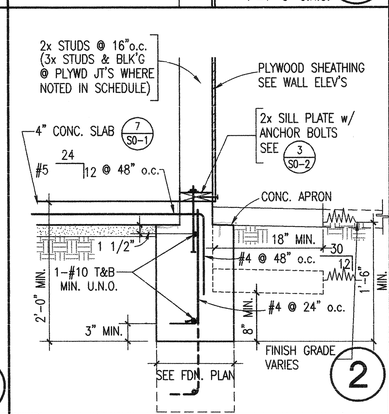

(2)

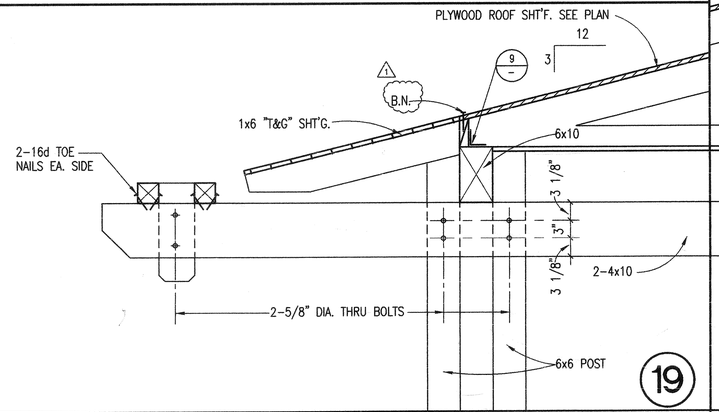

(19)

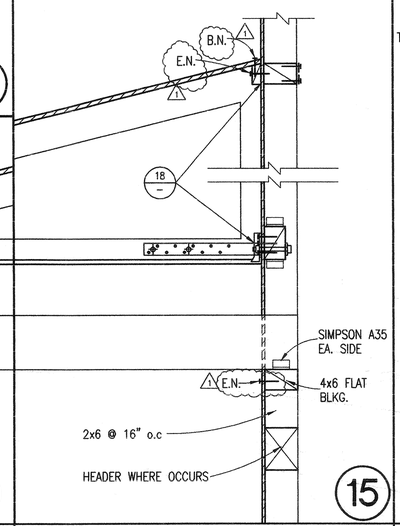

(15)

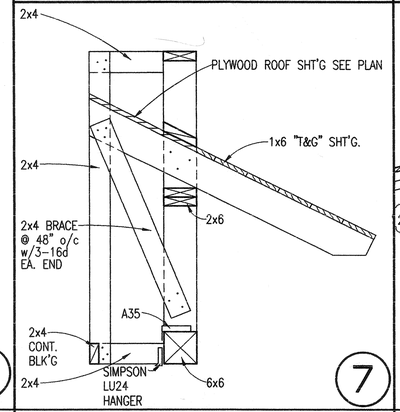

(7)

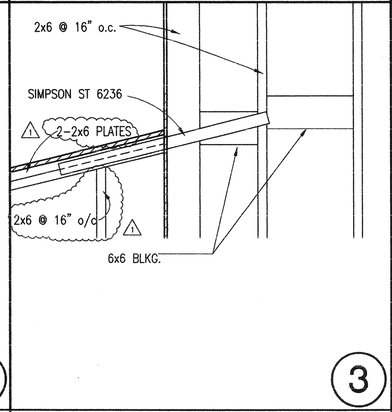

(3)

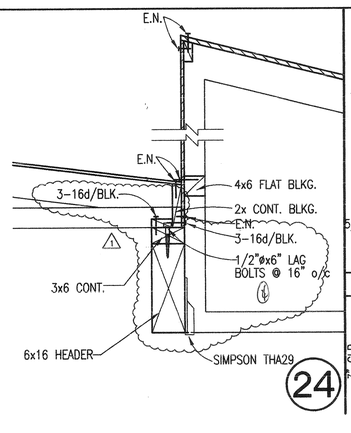

(24)

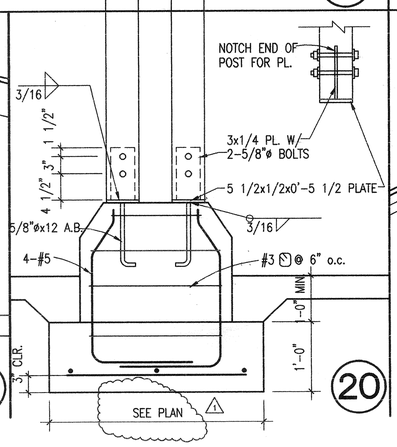

(20)

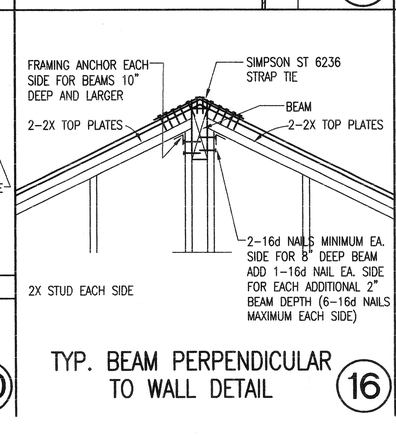

TYP. BEAM PERPENDICULAR TO WALL DETAIL (16)

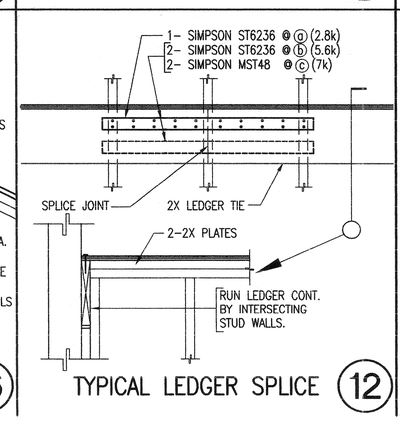

TYPICAL LEDGER SPLICE (12)

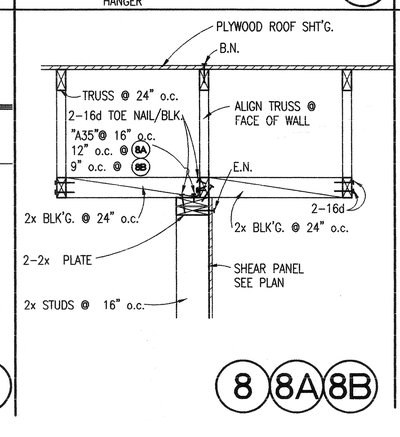

(8) (8A) (8B)

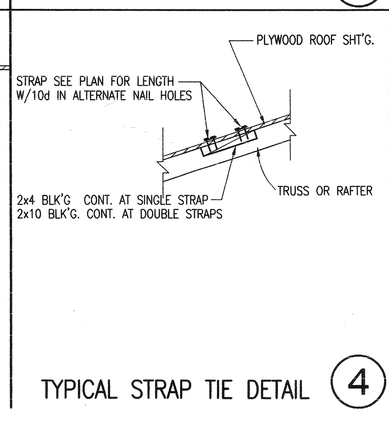

TYPICAL STRAP TIE DETAIL (4)

KROH/BROESKE ARCHITECTS
6160 BROCKTON AVE.
RIVERSIDE, CA 92506
TEL 909 788-5940
FAX 909 275-0149

PARK AND RECREATION OFFICES, WHITE PARK
3969 CHESTNUT ST.
RIVERSIDE, CALIFORNIA

CONSULTANTS
JOHNSON & NIELSEN ASSOCIATES
CONSULTING STRUCTURAL ENGINEERS
647 N. Main St. Suite 40, Riverside CA. 92501 (909)686-5122

REGISTERED PROFESSIONAL ENGINEER PER RON No. 1174 Exp. Date 3-31-01 STRUCTURAL STATE OF CALIFORNIA

NO.	DATE	REVISION
1	5/5/00	PLAN CHECK CORRECTION

LICENSED ARCHITECT JAMES L. BROESKE No. C009174 Ren 11-30-01 STATE OF CALIFORNIA

THIS DRAWING AND THE DESIGNS, ARRANGEMENTS, DEPICTIONS, IDEAS AND OTHER INFORMATION CONTAINED HEREIN CONSTITUTE UNPUBLISHED WORK OF KROH/BROESKE ARCHITECTS AND SHALL REMAIN PROPERTY OF KROH/BROESKE ARCHITECTS IN PERPETUITY. NO PART THEREOF SHALL BE REPRODUCED, COPIED, DISCLOSED, DISTRIBUTED/SOLD, PUBLISHED OR OTHERWISE USED IN ANYWAY WITHOUT THE ADVANCE EXPRESS WRITTEN CONSENT OF KROH/BROESKE ARCHITECTS. VISUAL CONTACT WITH THE ABOVE DRAWINGS OR ANY PART THEREOF, SHALL CONSTITUTE CONCLUSIVE EVIDENCE OF ACCEPTANCE OF THESE RESTRICTIONS.

SHEET TITLE

DRAWN	D.R.
CHECKED	PER
SCALE	
DATE	2-28-00
JOB	99008
SHEET	S0-3

28-209
AutoDATE: 02/26/2000 13:03

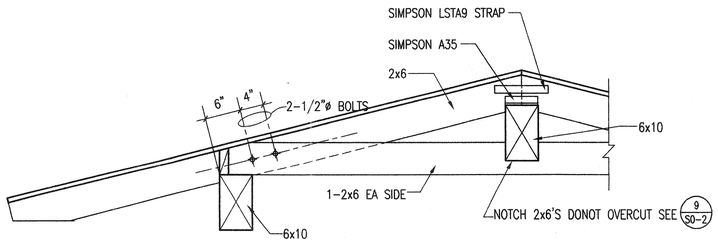

5

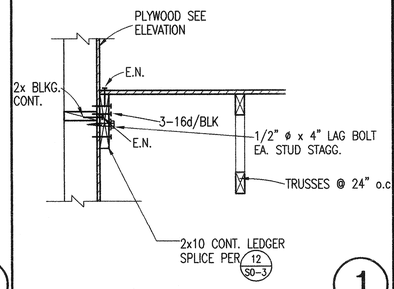

1"=1'-0" U.N.O.

1

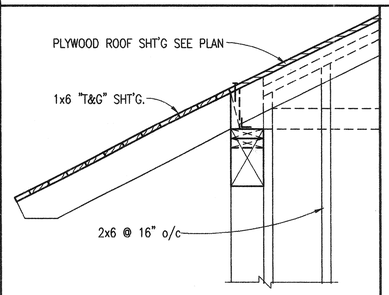

10

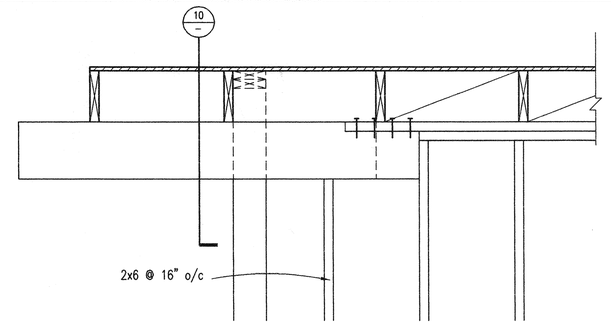

2

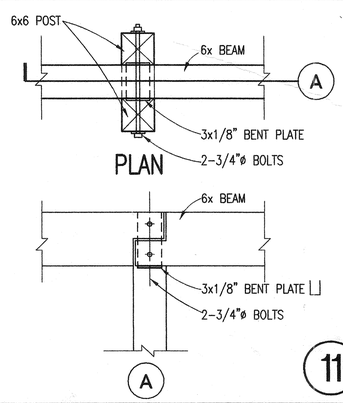

11

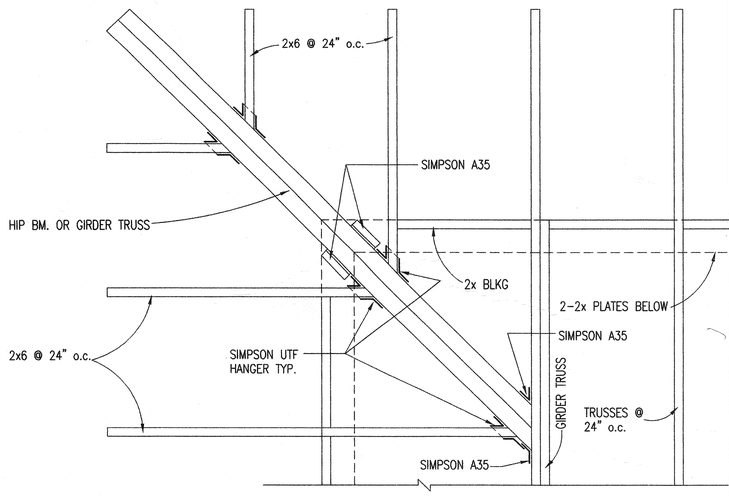

PLAN

4

KROH/BROESKE
ARCHITECTS
6180 BROCKTON AVE.
RIVERSIDE, CA 92506
TEL 909 788-5940
FAX 909 275-0149

PARK AND RECREATION OFFICES, WHITE PARK
3969 CHESTNUT ST.
RIVERSIDE, CALIFORNIA

CONSULTANTS
JOHNSON & NIELSEN ASSOCIATES
CONSULTING STRUCTURAL ENGINEERS
847 N. Main St. Suite 4B, Riverside CA. 92501 (909)686-5122

REGISTERED PROFESSIONAL ENGINEER
PER RON
No. 1174
Exp. Date 3-31-01
STRUCTURAL
STATE OF CALIFORNIA

NO.	DATE	REVISION

LICENSED ARCHITECT
JAMES L. BROESKE
No. C009174
Ren 11-30-01
STATE OF CALIFORNIA

THIS DRAWING AND THE DESIGNS, ARRANGEMENTS, DEPICTIONS, IDEAS AND OTHER INFORMATION CONTAINED HEREIN CONSTITUTE ORIGINAL AND UNPUBLISHED WORK OF KROH/BROESKE ARCHITECTS AND SHALL REMAIN PROPERTY OF KROH/BROESKE ARCHITECTS IN PERPETUITY. NO PART THEREOF SHALL BE REPRODUCED, COPIED, DISCLOSED, DISTRIBUTED/SOLD, PUBLISHED OR OTHERWISE USED IN ANYWAY WITHOUT THE ADVANCE EXPRESS WRITTEN CONSENT OF KROH/BROESKE ARCHITECTS. WHERE CONTACT WITH THE ABOVE DRAWINGS, OR ANY PART THEREOF, SHALL CONSTITUTE CONCLUSIVE EVIDENCE OF ACCEPTANCE OF THESE RESTRICTIONS.

SHEET TITLE

DRAWN	D.R.
CHECKED	PER
SCALE	
DATE	2-28-00
JOB	99008
SHEET	S0-4

28-209
AutoDATE: 02/28/2000 13:04

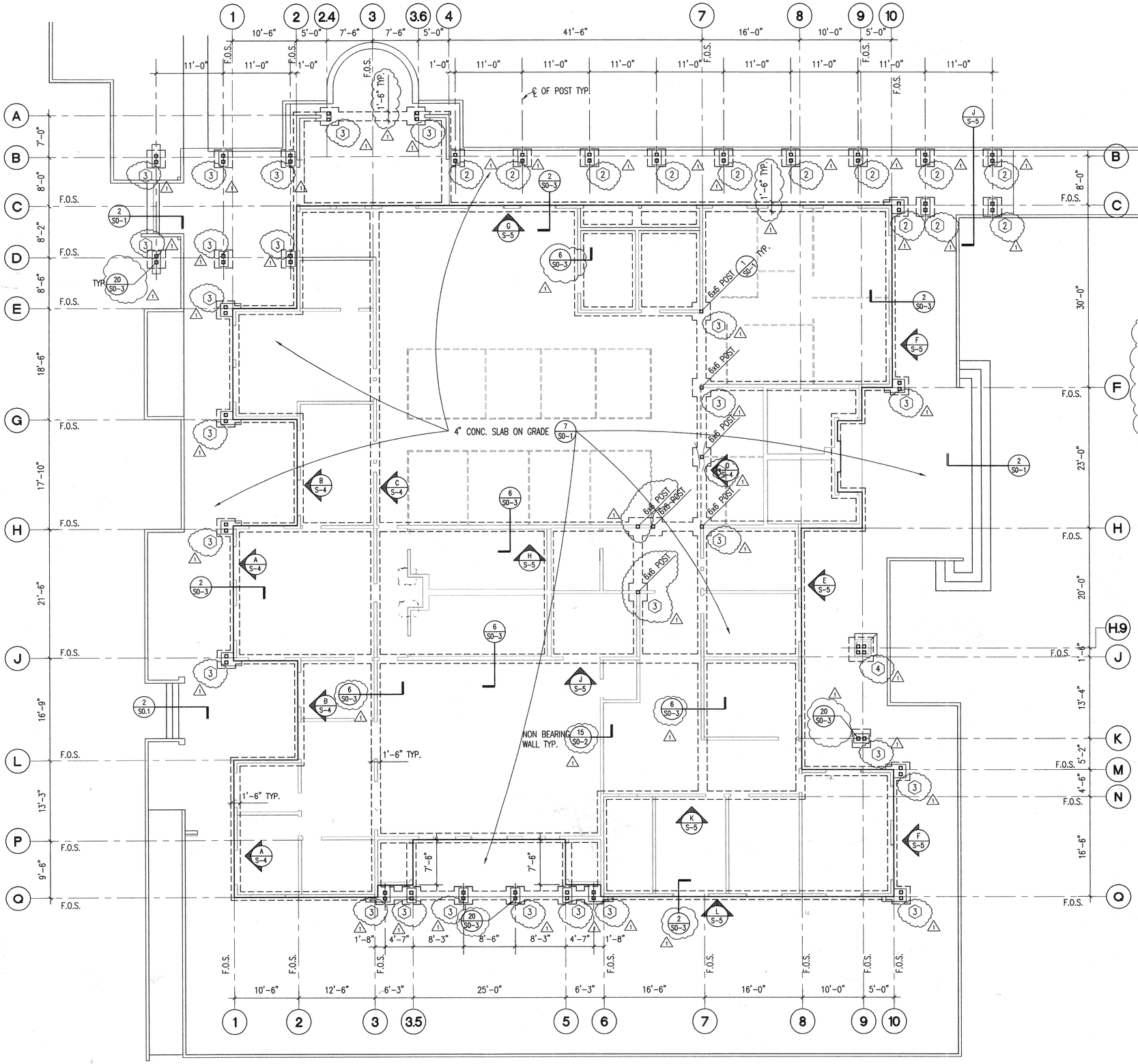

FOOTING PAD SCHEDULE				ALLOWABLE LOAD (IN POUNDS) FOR 1500 PSF SOIL BEARING PRESSURE
MARK	SIZE	REINFORCEMENT	REFERENCE	
1	NOT USED	–	–	
2	2'-0" X 2'-0" X 1'-0"	2-#4 EACH WAY	20 S0-3	5400#
3	3'-0" X 3'-0" X 1'-0"	4-#4 EACH WAY		12,150#
4	4'-0" X 4'-0" X 1'-0"	5-#5 EACH WAY	"	21,600#

2-16-01 ②
FTGS -
RECEIPT RETAINER
PADS

FOUNDATION PLAN

1/8"=1'-0"

KROH/BROESKE
ARCHITECTS
6180 BROCKTON AVE.
RIVERSIDE, CA 92506
TEL 909 788-5940
FAX 909 275-0149

PARK AND RECREATION OFFICES, WHITE PARK
3969 CHESTNUT ST.
RIVERSIDE, CALIFORNIA

CONSULTANTS
JOHNSON & NIELSEN ASSOCIATES
CONSULTING STRUCTURAL ENGINEERS
647 N. Main St. Suite 4B, Riverside CA. 92501 (909)686-5122

REGISTERED PROFESSIONAL ENGINEER
PER RON
No. 1174
Exp. Date 3-31-01
STRUCTURAL
STATE OF CALIFORNIA

NO.	DATE	REVISION
1	5/5/00	PLAN CHECK CORRECTION

LICENSED ARCHITECT
JAMES L. BROESKE
No. C009174
Ren 11-30-01
STATE OF CALIFORNIA

THIS DRAWING AND THE DESIGNS, ARRANGEMENTS, DEPICTIONS, IDEAS AND OTHER INFORMATION CONTAINED HEREIN CONSTITUTE UNPUBLISHED WORK OF KROH/BROESKE ARCHITECTS AND SHALL REMAIN PROPERTY OF KROH/BROESKE ARCHITECTS IN PERPETUITY. NO PART THEREOF SHALL BE REPRODUCED, COPIED, DISCLOSED, DISTRIBUTED, SOLD, PUBLISHED OR OTHERWISE USED IN ANYWAY WITHOUT THE ADVANCE EXPRESS WRITTEN CONSENT OF KROH/BROESKE ARCHITECTS. VISUAL CONTACT WITH THE ABOVE DRAWINGS, OR ANY PART THEREOF, SHALL CONSTITUTE CONCLUSIVE EVIDENCE OF ACCEPTANCE OF THESE RESTRICTIONS.

SHEET TITLE
FOUNDATION PLAN

DRAWN	D.R.
CHECKED	PER
SCALE	
DATE	2-28-00
JOB	99006
SHEET	S-1

28-209

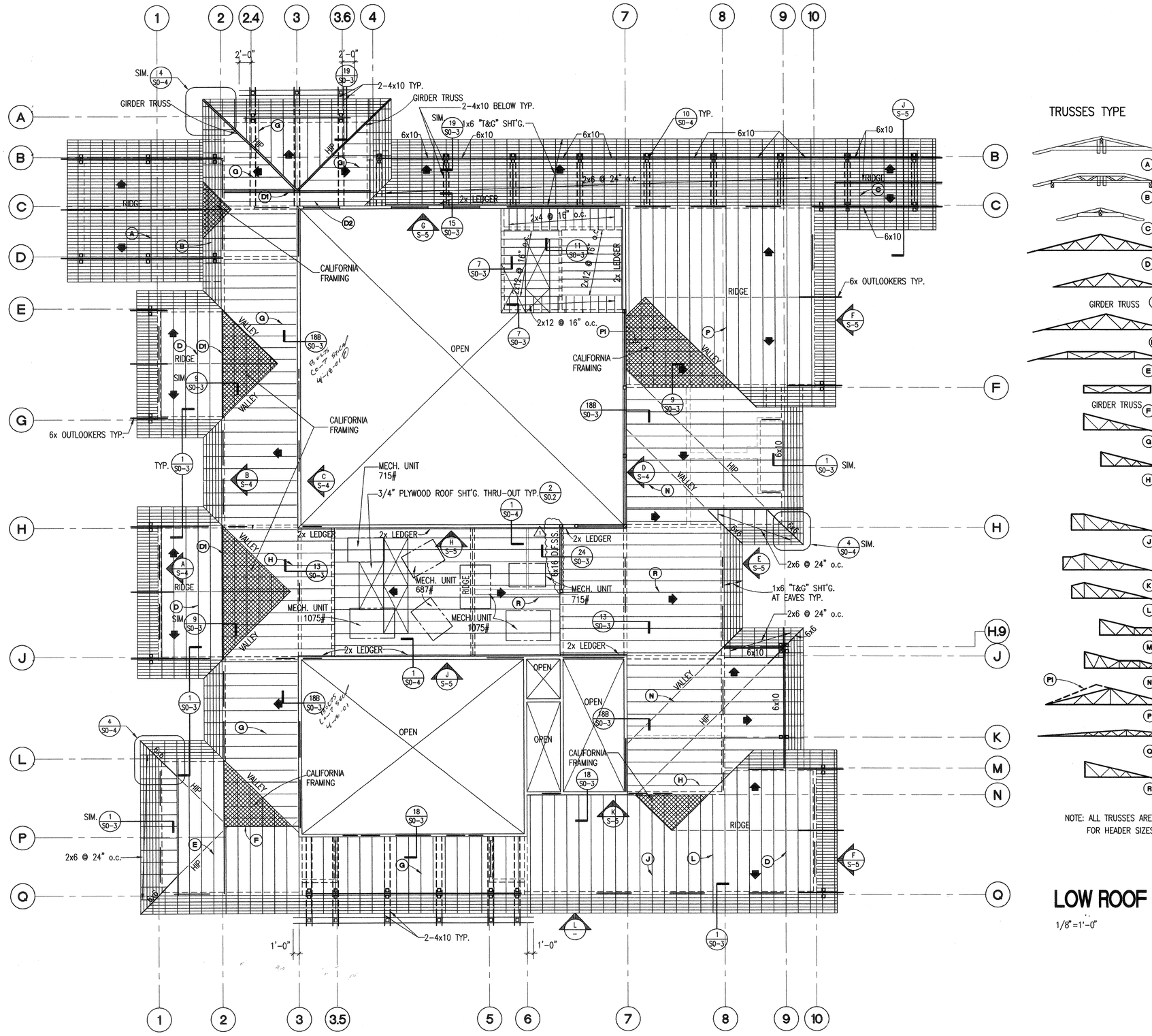

LOW ROOF FRAMING PLAN

1/8"=1'-0"

KROH/BROESKE
ARCHITECTS
6180 BROCKTON AVE.
RIVERSIDE, CA 92506
TEL 909 788-5940
FAX 909 275-0149

PARK AND RECREATION OFFICES, WHITE PARK
3969 CHESTNUT ST.
RIVERSIDE, CALIFORNIA

CONSULTANTS
JOHNSON & NIELSEN ASSOCIATES
CONSULTING STRUCTURAL ENGINEERS
847 N. Main St. Suite 4B, Riverside CA. 92501 (909)686-5122

PER RON
No. 1174
Exp. Date 3-31-01
REGISTERED PROFESSIONAL ENGINEER
STRUCTURAL
STATE OF CALIFORNIA

NO.	DATE	REVISION
1	5/5/00	PLAN CHECK CORRECTION

LICENSED ARCHITECT
JAMES L. BROESKE
No. C009174
Ren 11-30-01
STATE OF CALIFORNIA

THIS DRAWING AND THE DESIGNS, ARRANGEMENTS, DEPICTIONS, IDEAS AND OTHER INFORMATION CONTAINED HEREIN CONSTITUTE UNPUBLISHED WORK OF KROH/BROESKE ARCHITECTS AND SHALL REMAIN PROPERTY OF KROH/BROESKE, ARCHITECTS IN PERPETUITY. NO PART THEREOF SHALL BE REPRODUCED, COPIED, DISCLOSED, DISTRIBUTED/SOLD, PUBLISHED OR OTHERWISE USED IN ANYWAY WITHOUT THE ADVANCE EXPRESS WRITTEN CONSENT OF KROH/BROESKE ARCHITECTS. INITIAL CONTACT WITH THE ABOVE DRAWING, OR ANY PORTION OF HEREOF, SHALL CONSTITUTE CONCLUSIVE EVIDENCE OF ACCEPTANCE OF THESE RESTRICTIONS.

SHEET TITLE
LOW ROOF FRAMING PLAN

DRAWN	D.R.
CHECKED	PER
SCALE	
DATE	2-28-00
JOB	99006
SHEET	S-2

28-209

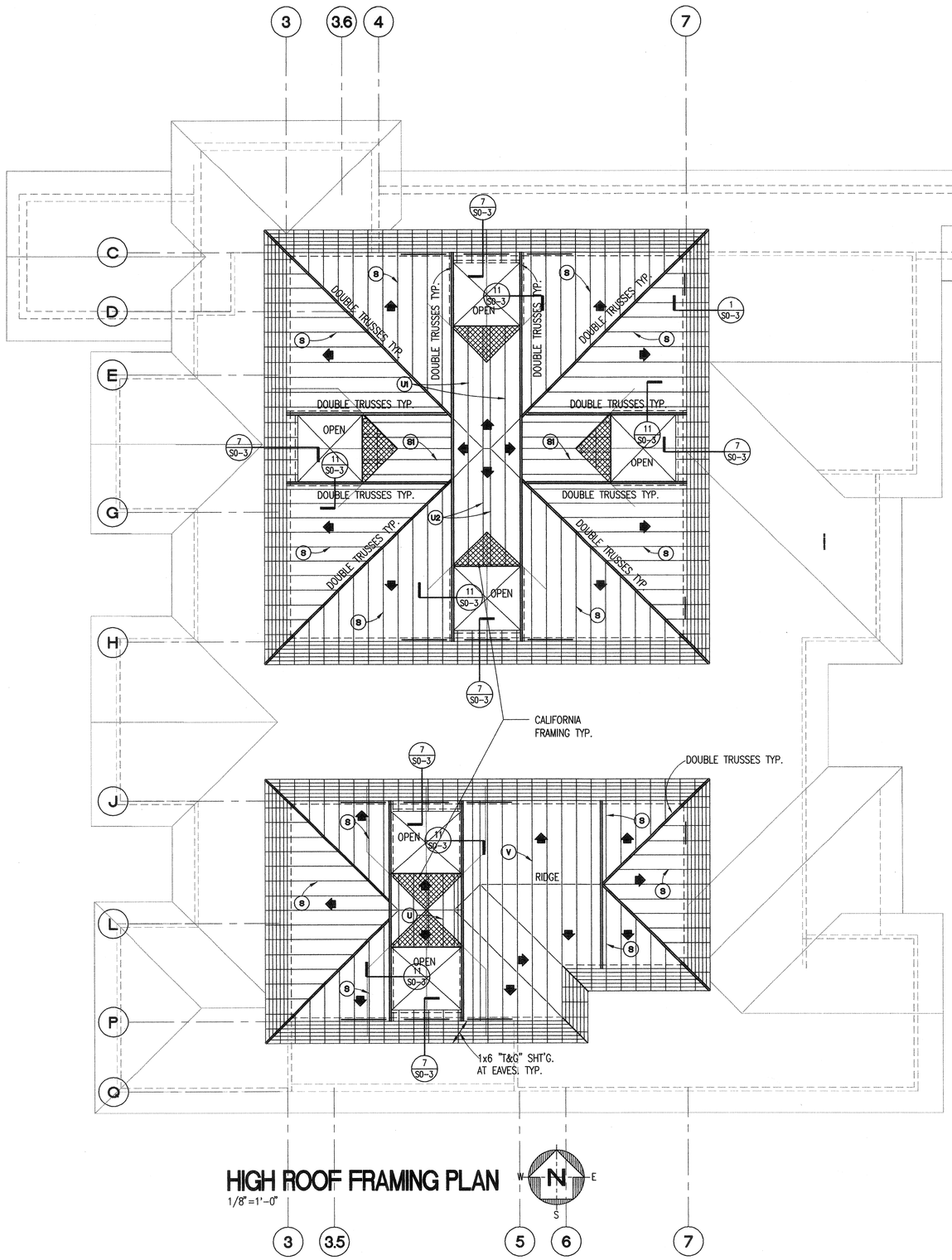

HIGH ROOF FRAMING PLAN

1/8" = 1'-0"

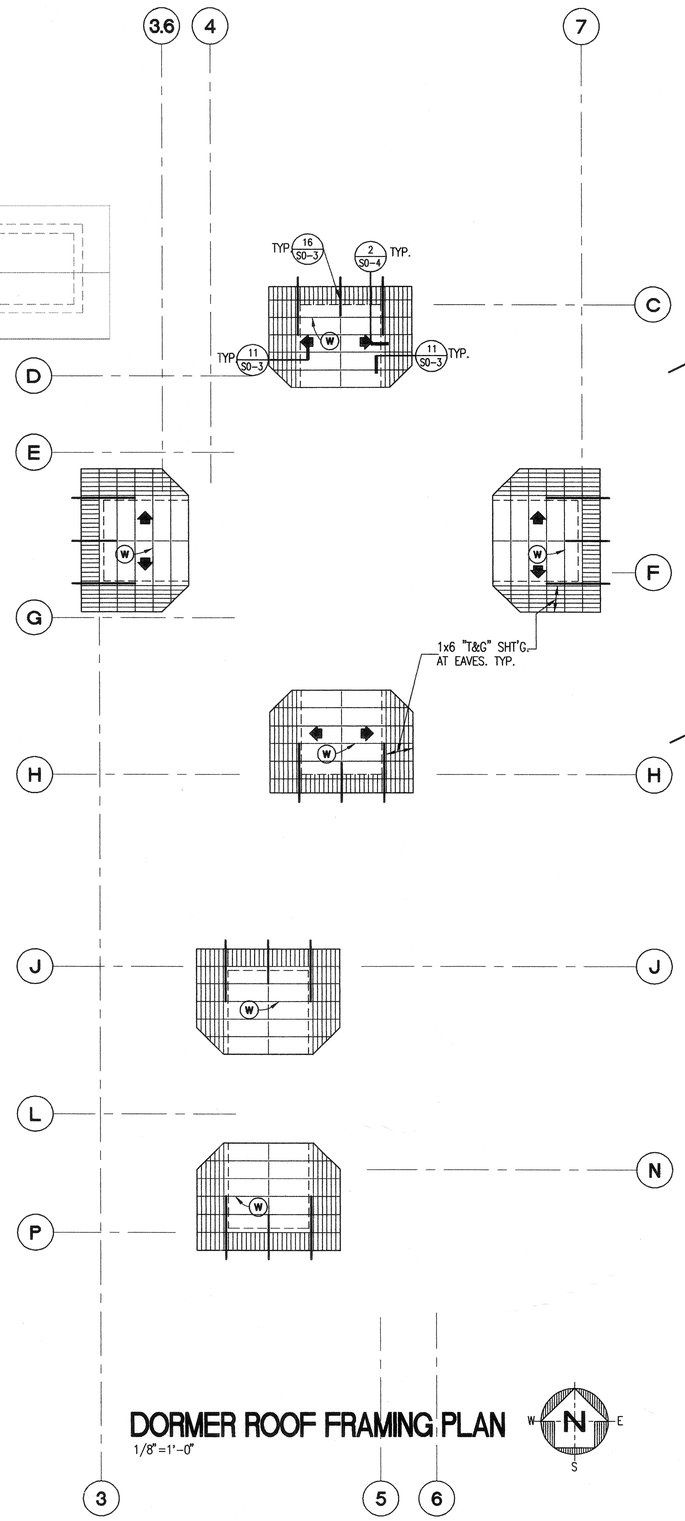

DORMER ROOF FRAMING PLAN

1/8" = 1'-0"

TRUSS TYPE

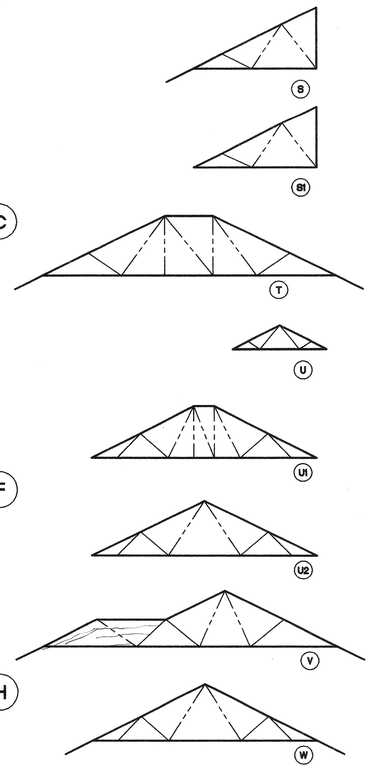

NOTE: ALL TRUSSES ARE AT 24" o.c.
FOR HEADER SIZES SEE 4/S0-2

KROH/BROESKE
ARCHITECTS
6180 BROCKTON AVE.
RIVERSIDE, CA 92506
TEL 909 788-5940
FAX 909 275-0148

PARK AND RECREATION OFFICES, WHITE PARK
3969 CHESTNUT ST.
RIVERSIDE, CALIFORNIA

CONSULTANTS
JOHNSON & NIELSEN ASSOCIATES
CONSULTING STRUCTURAL ENGINEERS
847 N. Main St. Suite 40, Riverside CA. 92501 (909)686-5122

REGISTERED PROFESSIONAL ENGINEER
PER RON
No. 1174
Exp. Date 3-31-01
STRUCTURAL
STATE OF CALIFORNIA

NO.	DATE	REVISION

LICENSED ARCHITECT
JAMES L. BROESKE
No. C009174
Ren 11-30-01
STATE OF CALIFORNIA

THIS DRAWING AND THE DESIGNS, ARRANGEMENTS, DEPICTIONS, IDEAS AND OTHER INFORMATION CONTAINED HEREIN CONSTITUTE COPYRIGHTED WORK OF KROH/BROESKE ARCHITECTS AND SHALL REMAIN PROPERTY OF KROH/BROESKE ARCHITECTS IN PERPETUITY. NO PART THEREOF SHALL BE REPRODUCED, COPIED, DISCLOSED, DISTRIBUTED/SOLD, PUBLISHED OR OTHERWISE USED IN ANYWAY WITHOUT THE ADVANCE EXPRESS WRITTEN CONSENT OF KROH/BROESKE ARCHITECTS. VISUAL CONTACT WITH THE ABOVE DRAWINGS OR ANY PART THEREOF, SHALL CONSTITUTE CONCLUSIVE EVIDENCE OF ACCEPTANCE OF THESE RESTRICTIONS.

SHEET TITLE

HIGH ROOF FRAMING PLAN

DRAWN	D.R.
CHECKED	PER
SCALE	
DATE	2-28-00
JOB	99009
SHEET	S-3

28-209

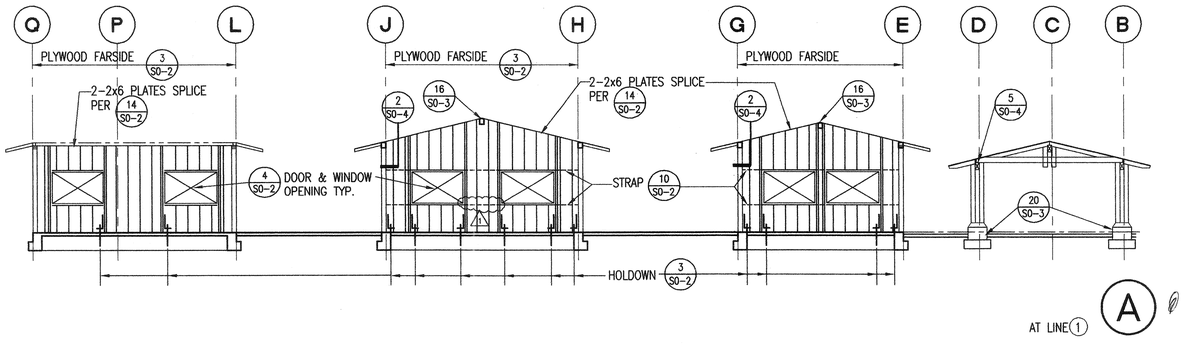

AT LINE 1 — A

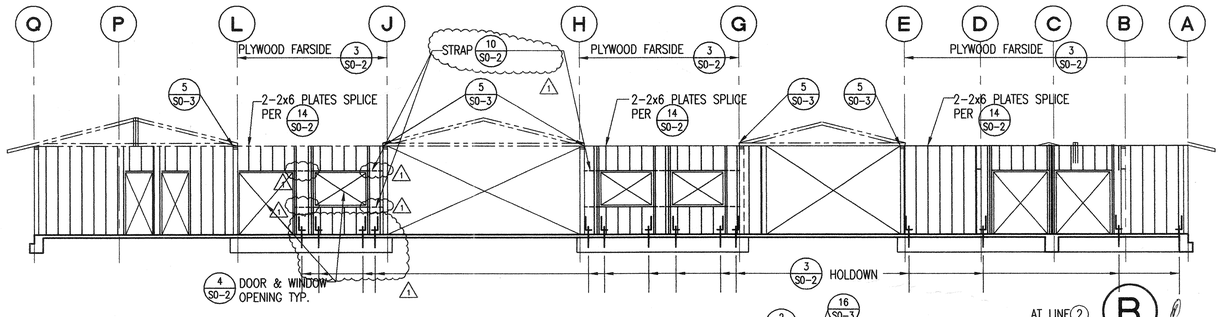

AT LINE 2 — B

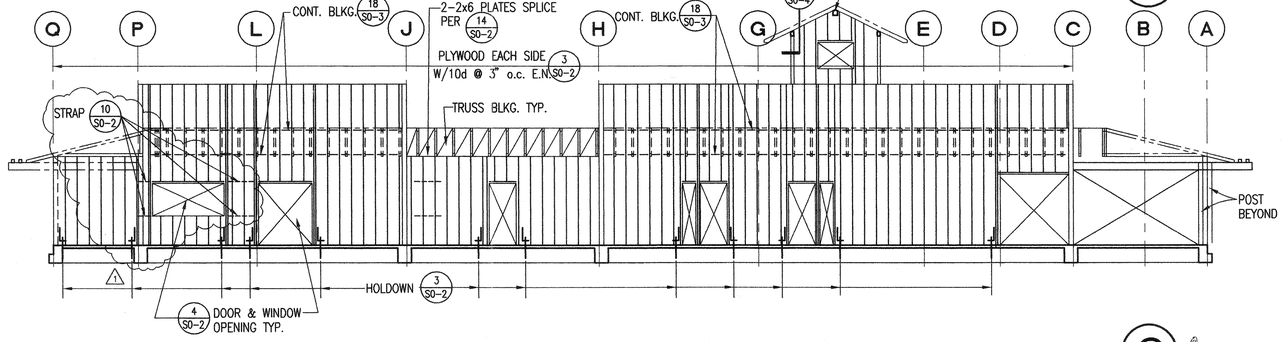

AT LINE 3 — C

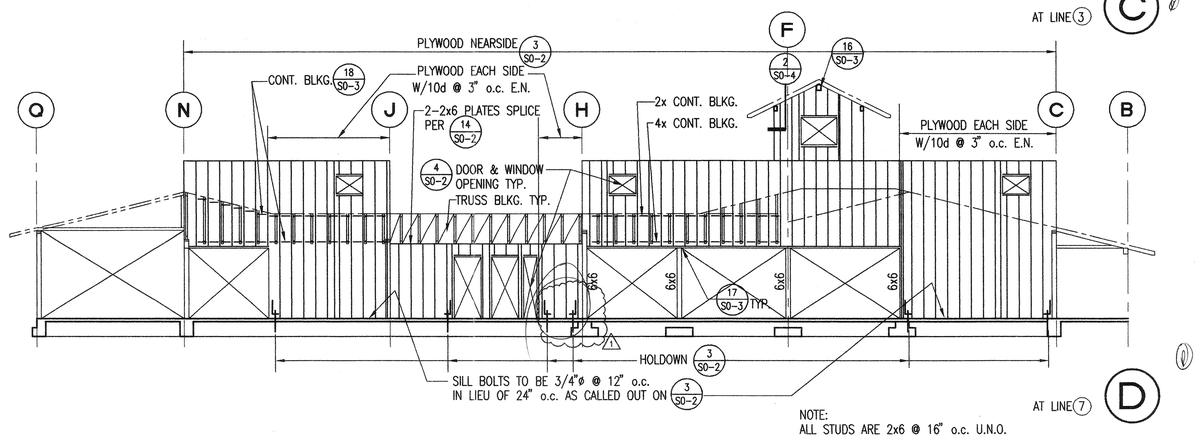

AT LINE 7 — D

NOTE:
ALL STUDS ARE 2x6 @ 16" o.c. U.N.O.

28-209

AutoDATE: 02/28/2000 13:05

KROH/BROESKE
ARCHITECTS
6180 BROCKTON AVE.
RIVERSIDE, CA 92506
TEL 909 788-5940
FAX 909 275-0145

PARK AND RECREATION OFFICES, WHITE PARK
3969 CHESTNUT ST.
RIVERSIDE, CALIFORNIA

CONSULTANTS
JN JOHNSON & NIELSEN ASSOCIATES
CONSULTING STRUCTURAL ENGINEERS
847 N. Main St. Suite 4B, Riverside CA. 92501 (909)686-5122

REGISTERED PROFESSIONAL ENGINEER
PER RON
No. 1174
Exp. Date 3-31-01
STRUCTURAL
STATE OF CALIFORNIA

NO.	DATE	REVISION
1	5/5/00	PLAN CHECK CORRECTION

LICENSED ARCHITECT
JAMES L. BROESKE
No. C009174
Ren 11-30-01
STATE OF CALIFORNIA

THIS DRAWING AND THE DESIGNS, ARRANGEMENTS, DEPICTIONS, IDEAS AND OTHER INFORMATION CONTAINED HEREIN CONSTITUTE UNPUBLISHED WORK OF KROH/BROESKE ARCHITECTS AND SHALL REMAIN PROPERTY OF KROH/BROESKE, ARCHITECTS IN PERPETUITY. NO PART THEREOF SHALL BE REPRODUCED, COPIED, DISCLOSED, DISTRIBUTED, SOLD, PUBLISHED OR OTHERWISE USED IN ANYWAY WITHOUT THE EXPRESS WRITTEN CONSENT OF KROH/BROESKE ARCHITECTS. VISUAL CONTACT WITH THE ABOVE DRAWINGS, OR ANY PART THEREOF, SHALL CONSTITUTE CONCLUSIVE EVIDENCE OF ACCEPTANCE OF THESE RESTRICTIONS.

SHEET TITLE

DRAWN	D.R.
CHECKED	PER
SCALE	
DATE	2-28-00
JOB	99008
SHEET	S-4

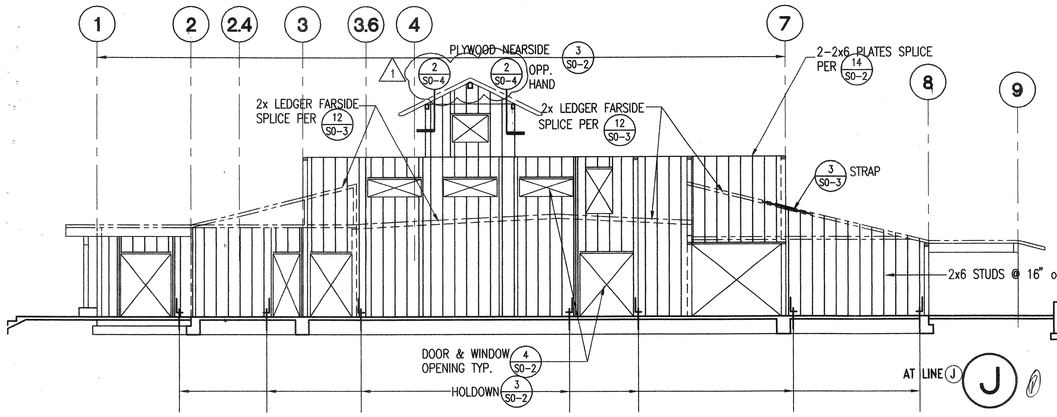

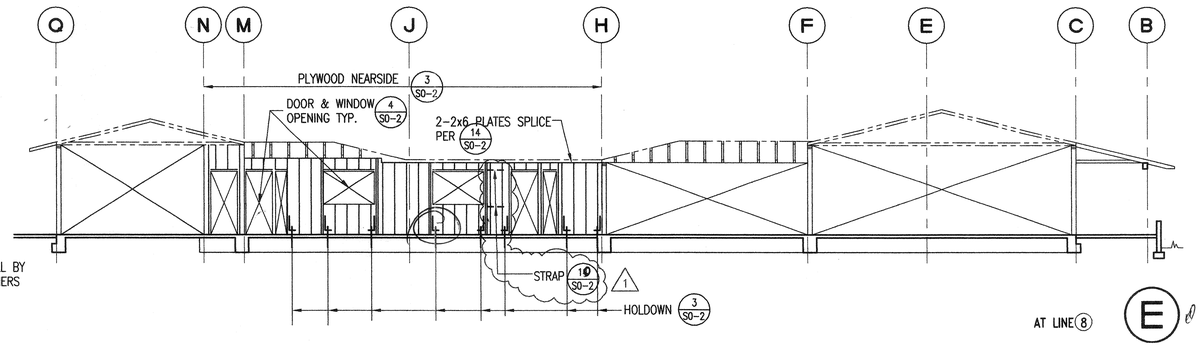

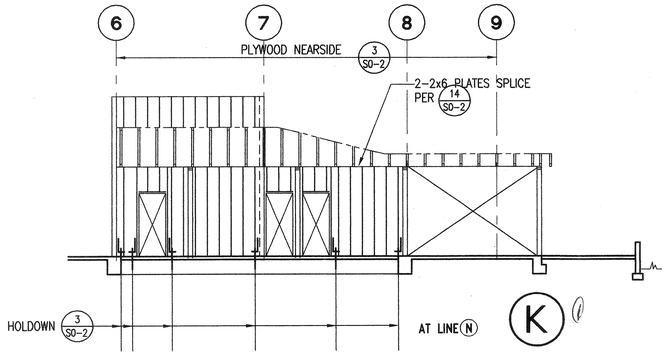

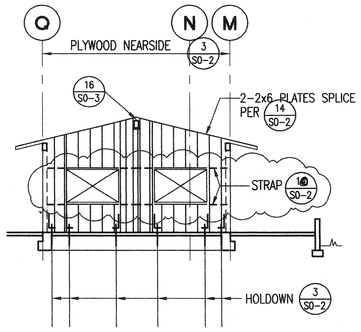

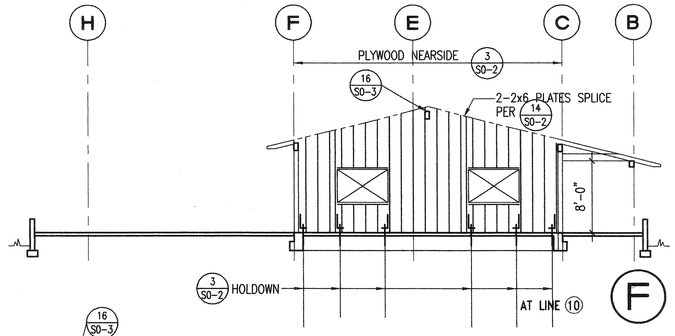

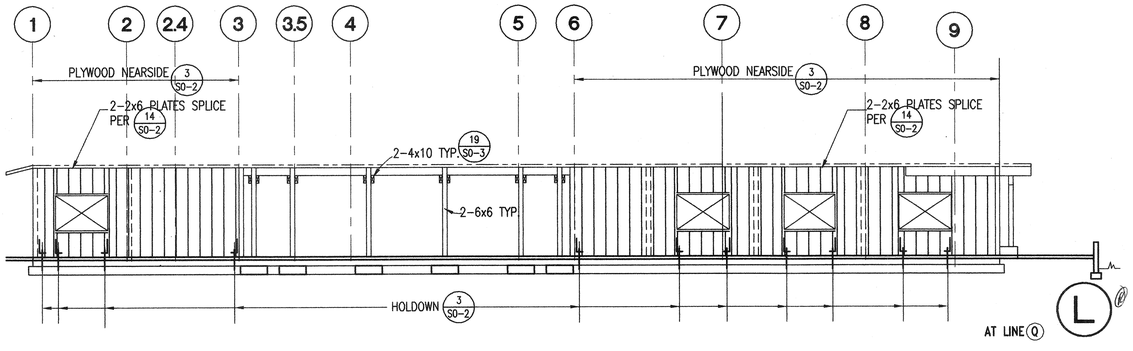

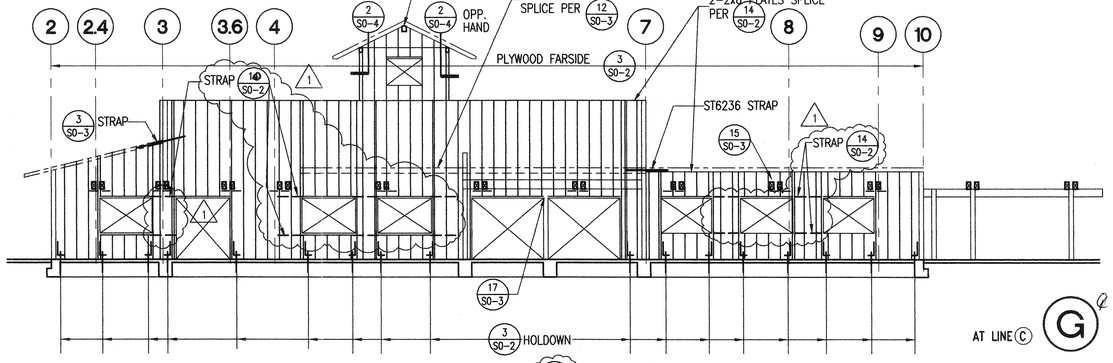

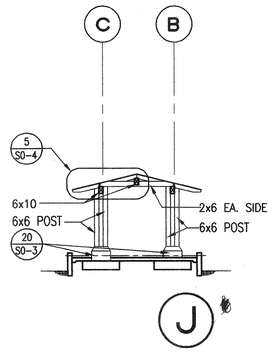

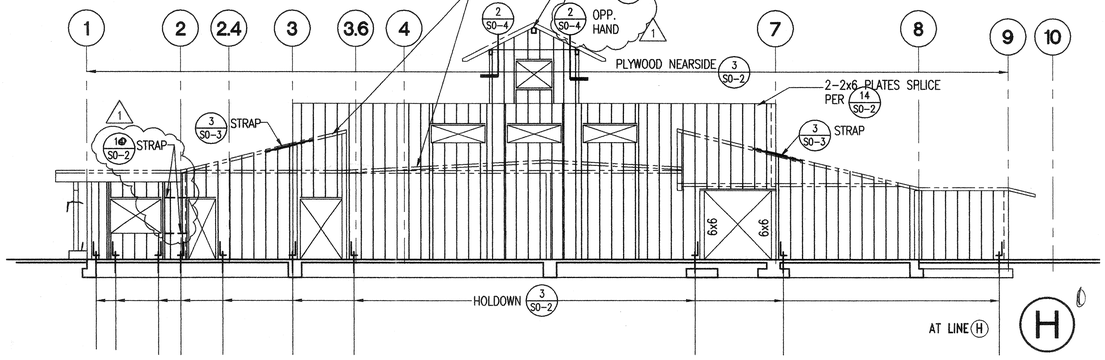

NOTE: ALL STUDS ARE 2x6 @ 16" o.c.

28-209

AutoDATE: 02/28/2000 13:18

KROH/BROESKE
ARCHITECTURE
6180 BROCKTON AVE.
RIVERSIDE, CA 92506
TEL 909 788-5940
FAX 909 275-0148

PARK AND RECREATION OFFICES, WHITE PARK
3969 CHESTNUT ST.
RIVERSIDE, CALIFORNIA

CONSULTANTS
JOHNSON & NIELSEN ASSOCIATES
CONSULTING STRUCTURAL ENGINEERS
947 N. Main St. Suite 4B, Riverside CA. 92501 (909)686-5122

REGISTERED PROFESSIONAL ENGINEER
PER RON
No. 1174
Exp. Date 3-31-01
STRUCTURAL
STATE OF CALIFORNIA

NO.	DATE	REVISION
1	5/5/00	PLAN CHECK CORRECTION

LICENSED ARCHITECT
JAMES L. BROESKE
No. C009174
Ren 11-30-01
STATE OF CALIFORNIA

THIS DRAWING AND THE DESIGNS, ARRANGEMENTS, DEPICTIONS, IDEAS AND OTHER INFORMATION CONTAINED HEREIN CONSTITUTE UNPUBLISHED WORK OF KROH/BROESKE ARCHITECTS AND SHALL REMAIN PROPERTY OF KROH/BROESKE ARCHITECTS IN PERPETUITY. NO PART THEREOF SHALL BE REPRODUCED, COPIED, DISCLOSED, DISTRIBUTED/SOLD, PUBLISHED OR OTHERWISE USED IN ANYWAY WITHOUT THE ADVANCE EXPRESS WRITTEN CONSENT OF KROH/BROESKE ARCHITECTS. VISUAL CONTACT WITH THE ABOVE DRAWINGS, OR ANY PART THEREOF, SHALL CONSTITUTE CONCLUSIVE EVIDENCE OF ACCEPTANCE OF THESE RESTRICTIONS.

SHEET TITLE

DRAWN	D.R.
CHECKED	PER
SCALE	
DATE	2-28-00
JOB	99006
SHEET	S-5

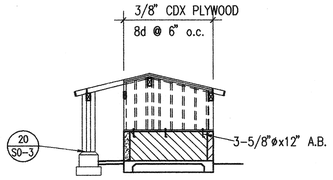

ELEVATION (A)

1/8"=1'-0"

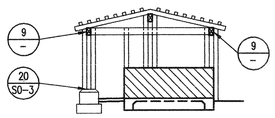

ELEVATION (B)

1/8"=1'-0"

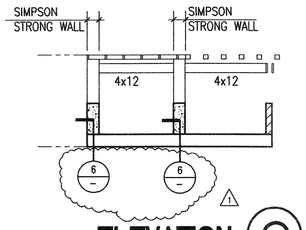

ELEVATION (C)

1/8"=1'-0"

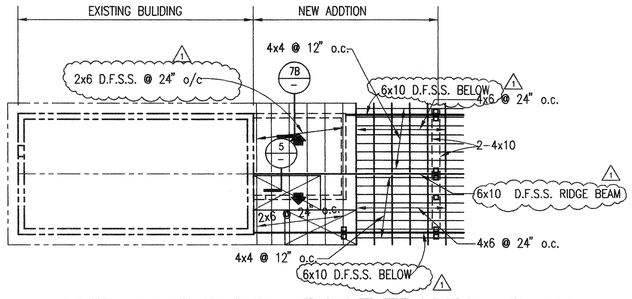

MAINTENANCE BLD'G.- ROOF FRAMING PLAN

1/8"=1'-0"

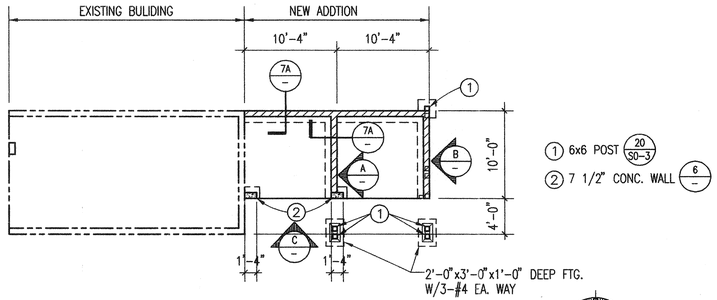

MAINTENANCE BLD'G.- FOUNDATION PLAN

1/8"=1'-0"

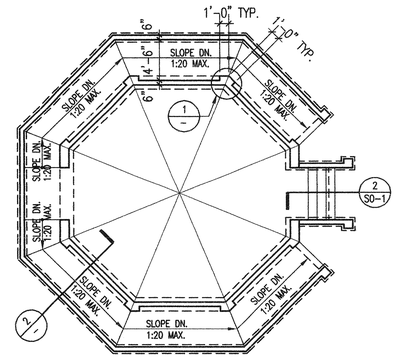

GAZEBO- FOUNDATION PLAN

1/8"=1'-0"

KROH/BROESKE
ARCHITECTS
6180 BROCKTON AVE.
RIVERSIDE, CA 92506
TEL 909 788-5940
FAX 909 275-0140

PARK AND RECREATION
OFFICES, WHITE PARK
3969 CHESTNUT ST.
RIVERSIDE, CALIFORNIA

CONSULTANTS
JOHNSON & NIELSEN ASSOCIATES
CONSULTING STRUCTURAL ENGINEERS
647 N. Main St. Suite 48, Riverside CA. 92501 (909)686-5122

REGISTERED PROFESSIONAL ENGINEER
PER RON
No. 1174
Exp. Date 3-31-01
STRUCTURAL
STATE OF CALIFORNIA

NO.	DATE	REVISION
1	5/3/00	PLAN CHECK CORRECTION

LICENSED ARCHITECT
JAMES L. BROESKE
No. C009174
Ren 11-30-01
STATE OF CALIFORNIA

THIS DRAWING AND THE DESIGNS, ARRANGEMENTS, DEPICTIONS, IDEAS AND OTHER INFORMATION CONTAINED HEREIN CONSTITUTE UNPUBLISHED WORK OF KROH/BROESKE ARCHITECTS AND SHALL REMAIN PROPERTY OF KROH/BROESKE ARCHITECTS IN PERPETUITY. NO PART THEREOF SHALL BE REPRODUCED, COPIED, DISCLOSED, DISTRIBUTED,SOLD, PUBLISHED OR OTHERWISE USED IN ANYWAY WITHOUT THE ADVANCE, EXPRESS WRITTEN CONSENT OF KROH/BROESKE ARCHITECTS. VISUAL CONTACT WITH THE ABOVE DRAWINGS, OR ANY PART THEREOF, SHALL CONSTITUTE CONCLUSIVE EVIDENCE OF ACCEPTANCE OF THESE RESTRICTIONS.

SHEET TITLE

DRAWN	D.R.
CHECKED	PER
SCALE	
DATE	2-28-00
JOB	99008
SHEET	S-6

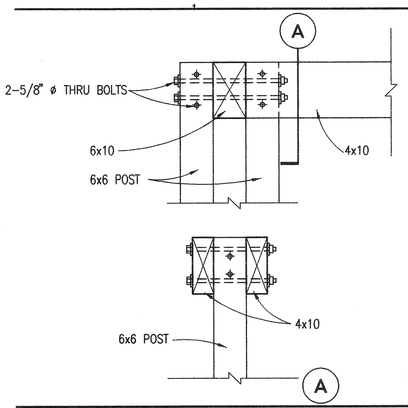

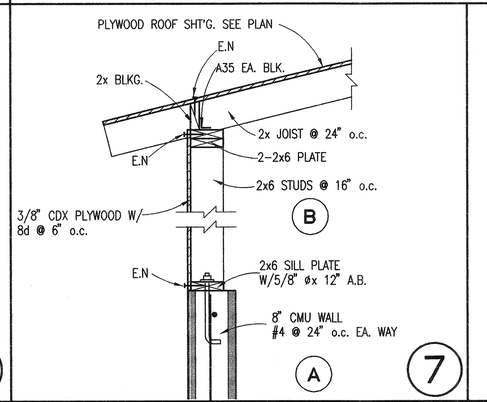

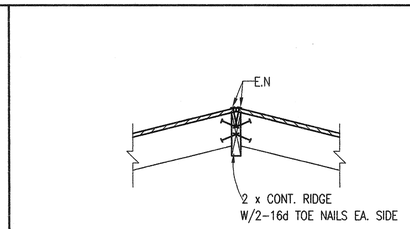

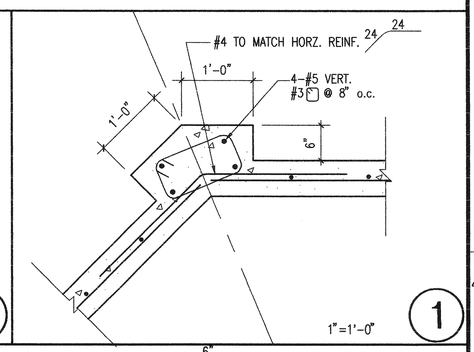

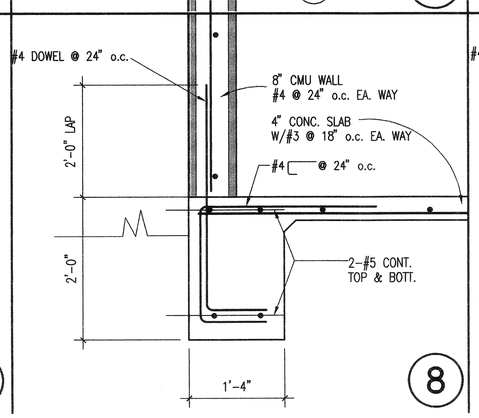

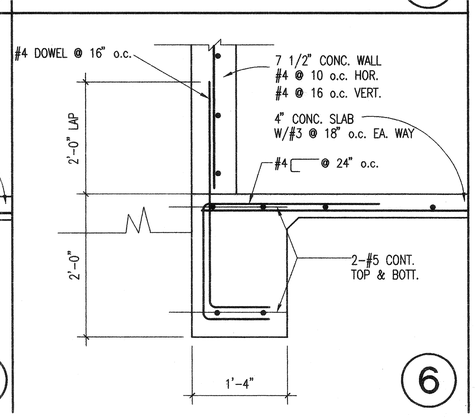

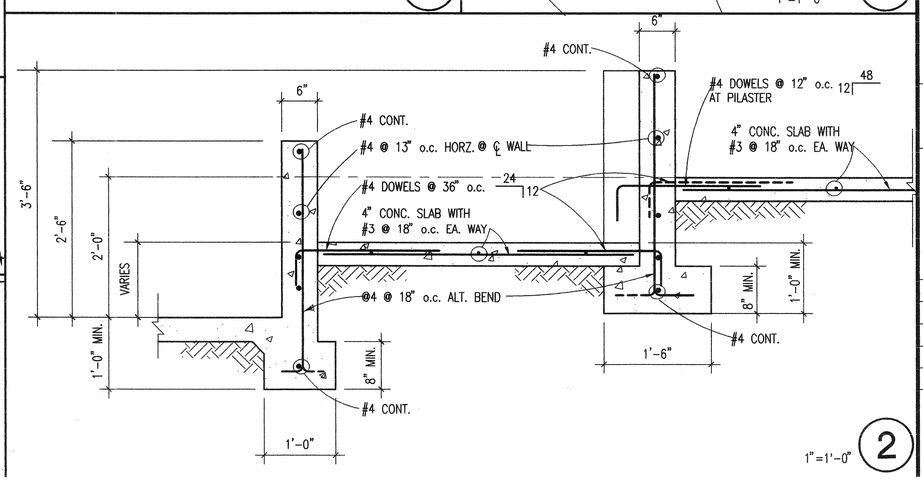

28-209
AutoDATE: 02/28/2000 13:18

10

A/C UNIT ROOF MOUNTING DETAIL

DUCT THROUGH ROOF DETAIL

DUCT ON ROOF MOUNTING DETAIL

AC-2 AND AC-6 SHALL HAVE CARRIER VVT OR APPROVED EQUAL CONTROL SYSTEM.
SEE SHEET M-2 FOR ZONE DAMPER SCHEDULE AND SHEET M-4 FOR CONTROL DIAGRAM.

HVAC SYMBOLS

SYMBOL	DESCRIPTION	SYMBOL	DESCRIPTION
	SUPPLY DUCT SECTION		EXHAUST DUCT SECTION
	RETURN DUCT SECTION	SFD	SMOKE & FIRE DAMPER W/ DUCT MTD SMOKE DETECTOR ASSEMBLY
	SUPPLY REGISTER/GRILLE	FD	FIRE DAMPER
	RETURN REGISTER/GRILLE		MANUAL VOLUME DAMPER
	EXHAUST REGISTER/GRILLE	UC	UNDER CUT DOOR
	LINED DUCT	Ø	ROUND DUCT DIAMETER
	FLEXIBLE CONNECTION	OSA	OUTSIDE AIR
(T)	THERMOSTAT	CD	CEILING DIFFUSER
DAP	DUCT ACCESS PANEL	RR / RG	RETURN REGISTER/GRILLE
	90 DEGREE ROUND RADIUS ELBOW		SPIN-IN FITTING W/MVD TO RECT.DUCT
	T - FITTING		DUCT CROSSING
	FLEXIBLE CONN. TO AIR OUTLET		DUCT TAKE-OFF AT BOTTOM
	ROUND DUCT DROP		REDUCER
TG	TRANSFER GRILLE	ER/EG	EXHAUST REGISTER/GRILLE
SAD	SUPPLY AIR DUCT	RAD	RETURN AIR DUCT
UTR	UP THRU ROOF	EAD	EXHAUST AIR DUCT

EXHAUST FAN SCHEDULE

SYMBOL	MANUF.	MODEL	AIR QUANTITY CFM	ESP INCH W.G.	RPM	ELECTRICAL POWER	V	PH	HZ	UNIT WT LBS	REMAKES
EF 1	LAREN COOK	GC-720	520	0.125	1375	301 W	115	1	60	36	CEILING MOUNT W/ BACKDRAFT DAMPER & ROOF JACK
EF 2	LAREN COOK	GC-820	800	0.25	780	287 W	115	1	60	74	CEILING MOUNT W/ BACKDRAFT DAMPER & ROOF JACK

EF-1 AND EF-2 SHALL BE CONTROLLED BY LIGHT SWITCH BY ELECTRICAL.

AIR CONDITIONING UNIT SCHEDULE

SYMBOL	MANUF.	MODEL	COOLING, ARI TOTAL	SEN.	EER	HEATING, MBTUH - GAS INPUT	OUTPUT	AFUE	SUPPLY AIR CFM	ESP	ELECTRICAL POWER	V	PH	HZ	UNIT WT. LBS	REMARKS
AC 1	CARRIER	48HJD 008	90.1 MBTUH	61.2 MBTUH	11.0	125.0	102.5	82	2450	1.2	AMP 33.7	208	3	60	1075	W/ ECONOMIZER
AC 1A	CARRIER	48HJD 005	48.9 MBTUH	34.7 MBTUH	11.0	72.0	57.1	82	1600	1.2	AMP 19.1	208	3	60	687	W/ ECONOMIZER
AC 2	CARRIER	48HJD 008	90.1 MBTUH	61.2 MBTUH	11.0	125.0	102.5	82	2450	1.2	AMP 33.7	208	3	60	1075	W/ ECONOMIZER
AC 3	CARRIER	48HJD 006	63.8 MBTUH	46.7 MBTUH	11.0	72.0	57.1	82	2000	1.2	AMP 24.6	208	3	60	715	W/ ECONOMIZER
AC 4	CARRIER	48HJD 008	90.1 MBTUH	61.2 MBTUH	11.0	125.0	102.5	82	2450	1.2	AMP 33.7	208	3	60	1075	W/ ECONOMIZER
AC 5	CARRIER	48HJE 004	37.8 MBTUH	27.2 MBTUH	11.0	72.0	57.1	82	1200	1.2	AMP 15.9	208	3	60	687	W/ ECONOMIZER
AC 6	CARRIER	48HJE 004	37.8 MBTUH	27.2 MBTUH	11.0	72.0	57.1	82	1200	1.2	AMP 15.9	208	3	60	687	W/ ECONOMIZER

AIR CONDITIONING UNIT CONTROL DIAGRAM

FOR AC-1, AC-1A, AC-3, AC-4 AND AC-6

HVAC NOTES

1. ALL WORK SHALL CONFORM TO LOCAL CODES.
2. THIS CONTRACTOR SHALL PAY FOR ALL PERMITS AND FEES.
3. CONTROL LOW VOLTAGE WIRING AND CONDUIT BY MECHANICAL CONTRACTOR.
4. CONDENSATE PIPING AND FINAL CONNECTION TO A/C UNIT BY PLUMBING CONTRACTOR.
5. A/C UNIT ROOF CURB, PLATFORM AND EQUIPMENT PAD ON GROUND BY GENERAL CONTRACTOR.
6. CONNECT MAIN DUCTS OR PLENUM TO A/C UNIT WITH FLEXIBLE CONNECTIONS.
7. DIMENSION OF DUCT SHOWN ON DRAWINGS ARE INSIDE CLEAR SIZE. LINE 10 FT OF MAIN DUCTS OR PLENUM WITH 1" THICK SOUND ABSORBENT MATERIAL AND WHERE INDICATED ON THE DRAWINGS.
8. DUCTWORK SHALL BE G. I. WRAPPED WITH INSULATION HAVING A VALUE OF R = 4.2.
9. PROVIDE THROWAWAY FILTER FOR A/C UNIT AS REQUIRED.
10. THIS CONTRACTOR SHALL COORDINATE WITH GENERAL CONTRACTOR FOR SIZE AND LOCATION OF ROOF OPENING AND FIRE WALL PENETRACTION FOR DUCTWORK; AND WITH ELECTRICAL CONTRACTOR FOR ELECTRICAL REQUIREMENTS FOR ALL MECHANICAL EQUIPMENT.
11. ALL DUCTWORK SHALL BE CONSTRUCTED, SUPPORTED AND SEALED PER UMC CHAPTER 6.
12. ALL DUCTWORK HANGER STRAPS SHALL BE SECURED TO STRUCTURAL MEMBERS.
13. ROUND AND RECTANGULAR DUCTWORK ARE INTERCHANGEABLE IF FRICTION PER 100 FEET ARE EQUAL. SUBSTITUTE ROUND DUCT WITH RECTANGULAR DUCT WHEN SPACE IS LIMITED AT NO ADDITIONAL COST TO THE OWNER.
14. FIRE DAMPER IS REQUIRED FOR ALL DUCT PENETRATIONS AT FIRE SEPARATION WALL AND CEILING.
15. CEILING DIFFUSERS SHALL BE KRUEGER SERIES 6500 WITH PERFORATED PLATE; FRAMESTYLE SHALL BE COMPATIBLE WITH THE TYPE OF CEILING USED. PERFORATED RETURN AIR REGISTERS SHALL MATCH SUPPLY DIFFUSERS. MATERIAL SHALL BE ALUMINUM OR STEEL. FINISH SHALL BE BAKED ENAMEL WHITE. BOTH SUPPLY DIFFUSERS AND RETURN REGISTERS SHALL HAVE O.B.D.; ANEMOSTAT, METALAIRE OR APPROVED EQUAL.
16. PROVIDE BACKDRAFT DAMPER FOR ALL EXHAUST FANS.
17. THE AIR DISTRIBUTION SYSTEM SHALL BE TESTED AND BALANCED AS SHOWN ON THE DRAWINGS BY A MEMBER OF AABC OR NECC AND A REPORT SHALL BE SUBMITTED TO THE ARCHITECT FOR APPROVAL.
18. ANY MATERIAL OR EQUIPMENT OTHER THAN THAT INDICATED ON THE DRAWINGS SHALL NOT BE USED UNLESS APPROVED IN WRITING BY THE ENGINEER. ANY CHANGE IN MECHANICAL, ELECTRICAL AND OTHER SYSTEMS REQUIRED DUE TO SUCH SUBSTITUTION SHALL BE THE RESPONSIBILITY OF THE MECHECHANICAL CONTRACTOR AND AT NO ADDITIONAL COST TO THE OWNER.
19. ROUND DUCT IN ATTIC SPACE MAY USE FIBERGLASS FLEXIBLE DUCT, GLASS-FLEX SL-181 OR APPROVED EQUAL. FLEXIBLE DUCTS SHALL BE SUPPORTED AT OR NEAR MID-LENGTH AND NO LONGER THAN 7 FT ON CENTER WITH 1" WIDE 28 GA STEEL COLLAR ATTACHED TO STRUCTURAL MEMBER WITH APPROVED DUCT HANGER. ALUMINUM FLEXIBLE DUCT SHALL NOT BE USED FOR CONDITIONED AIR DISTRIBUTION.
20. FOR A/C-1, 1A, 2, 3, 4 & 5, PROVIDE DUCT MOUNTED SMOKE DETECTOR AT MAIN SUPPLY AIR DUCT. WHEN ANY ONE OF THE SMOKE DETECTORS IS ACTIVATED, ALL SIX SUPPLY FANS SHALL BE AUTOMATICALLY SWITCHED OFF. THIS CONTRACTOR SHALL FURNISH MATERIAL AND LABOR TO INSTALL A COMPLETE AND OPERATIONAL SYSTEM INCLUDING ELECTRICAL PANELS, RELAYS, TRANSFORMERS, WIRING AND CONDUIT. WHERE FIRE DETECTION OR ALARM SYSTEMS ARE PROVIDED FOR THE BUILDING, THIS DUCT MOUNTED SMOKE DETECTORS SHALL BE SUPERVISED BY SUCH SYSTEM.

HVAC SYSTEM MANDATORY MEASURES

1. HVAC EQUIPMENT SHALL HAVE BEEN CERTIFIED AS MEETTING MINIMUM EFFICENCY AND CONTROL REQUIREMENTS PER APPLIANCE EFFICIENCY STANDARDS AND ENERGY EFFICIENCY STANDARDS.
2. PIPING, EXCEPT THOSE CONVEYING FLUIDS AT TEMPERATURES BETWEEN 60 F AND 105 F, OR WITHIN HVAC EQUIPMENT, SHALL BE INSULATED IN ACCORDANCE WITH STANDARDS SECTION 123.
3. AIR HANDLING DUCT SYSTEMS SHALL BE CONSTRUCTED, INSTALLED, SEALED AND INSULATED AS PROVIDED IN CHAPTER 6 OF THE UNIFORM MECHANICAL CODE.
4. EACH SPACE CONDITIONING SYSTEM SHALL BE INSTALLED WITH AN AUTOMATIC TIME SWITCH WITH MANUAL OVERRIDE FOR UP TO 4 HOURS OPERATION DURING OFF-HOURS. THE TIME SWITCH SHALL BE CAPABLE OF PROGRAMMING DIFFERENT SCHEDULES FOR WEEKDAYS AND WEEKDAYS; AND HAS PROGRAM BACKUP CAPABILITIES THAT PREVENT THE LOSS OF DEVICE'S PROGRAM AND TIME SETTING FOR AT LEAST 10 HOURS IF POWER IS INTERRUPTED.
5. EACH SPACE CONDITIONING SYSTEM SHALL BE INSTALLED WITH AN OCCUPANCY SENSOR TO CONTROL THE OPERATING PERIOR OF THE SYSTEM; AND SHALL BE INSTALLED WITH CONTROLS THAT TEMPORARILY RESTART AND TEMPORARILY OPERATE THE SYSTEM AS REQUIRED TO MAINTAIN A SETBACK HEATING THERMOSTAT SETPOINT.
6. EACH SPACE CONDITIONING ZONE SHALL BE CONTROLLED BY AN INDIVIDUAL THERMOSTATIC CONTROL TAHT RESPONDS TO TEMPERATURE WITHIN THE ZONE. FOR HEATING, THE CONTROL SHALL BE ADJUSTABLE DOWN TO 55 F OR LOWER. FOR COOLING, THE CONTROL SHALL BE ADJUSTABLE UP TO 85 F OR HIGHER. WHEN USED TO CONTROL BOTH HEATNG AND COOLING IT SHALL HAVE A DEAD BAND OF MINIMUM 5 F WITHIN WHICH THE SUPPLY OF HEATING AND COOLING IS SHUT OFF OR REDUCED TO A MINIMUM.
7. THERMOSTAT SHALL HAVE NUMERIC SETPOINTS IN DEGREE F; AND SHALL HAVE ADJUSTABLE SETPOINT STOPS ACCESSIBLE ONLY TO AUTHORIZED PERSONNEL.
8. HEAT PUMP THERMOSTAT SHALL BE ABLE TO PREVENT ELECTRIC RESISTANCE SUPPLEMENTARY HEATER OPERATION WHEN HEATING LOAD CAN BE MET BY HEAT PUMP ALONE.
9. CONTROLS SHALL BE PROVIDED TO ALLOW OUTSIDE AIR DAMPERS TO BE OPERATED AT THE VENTILATION RATES AS SPECFIIED IN THESE PLANS.
10. GRAVITY OR AUTOMATIC DAMPERS FOR OUTSIDE AIR INTAKES, DISCHARGES AND EXHAUST SYSTEM SHALL BE INTERLOCKED AND CLOSED ON FAN SHUTDOWN.
11. GRAVITY VENTILATING SYSTEM SHALL BE PROVIDED WITH AUTOMATIC OR MANUAL DAMPER IN ALL OPENINGS TO THE OUTSIDE.
12. ALL VENTILATION SYSTEMS SHALL BE DOCUMENTED PER CALIFORNIA SAFETY CODE (TITLE 8, SECTION 5142(b) TO BE PROVIDING THE MINIMUM RERQUIRED VENTILATION RATE AS DETERMINED USING ONE OF THE FOLLOWING PROCEDURES:
   A. ALL SYSTEMS SHALL BE BALANCED TO THE QUANTITIES SPECIFIED IN THESE PLANS IN ACCORDANCE WITH NEBB(1983) OR AABC(1989) STANDARDS.
   B. THE SYSTEM SHALL PROVIDE MINIMUM OSA AS SHOWN ON THESE PLANS; AND SHALL BE MEASURED AND CERTIFIED BY THE INSTALLING LICENSED C-20 MECHANICAL CONTRACTOR.

KROH/BROESKE
ARCHITECTS
6180 BROCKTON AVE.
RIVERSIDE, CA 92506
TEL 909 788-5940
FAX 909 275-0149

Park and Recreation Offices, White Park
3936 CHESTNUT ST.
RIVERSIDE, CALIFORNIA

CONSULTANTS •

NO. DATE REVISION

LICENSED ARCHITECT
JAMES L. BROESKE
No. C009174
Ren 11-30-01
STATE OF CALIFORNIA

THIS DRAWING AND THE DESIGNS, ARRANGEMENTS, DEPICTIONS, IDEAS AND OTHER INFORMATION CONTAINED HEREIN CONSTITUTE UNPUBLISHED WORK OF KROH/BROESKE ARCHITECTS AND SHALL REMAIN PROPERTY OF KROH/BROESKE ARCHITECTS IN PERPETUITY. NO PART THEREOF SHALL BE REPRODUCED, COPIED, DISCLOSED, DISTRIBUTED,SOLD, PUBLISHED OR OTHERWISE USED IN ANYWAY WITHOUT THE ADVANCE EXPRESS WRITTEN CONSENT OF KROH/BROESKE ARCHITECTS. VISUAL CONTACT WITH THE ABOVE DRAWINGS, OR ANY PART THEREOF, SHALL CONSTITUTE CONCLUSIVE EVIDENCE OF ACCEPTANCE OF THESE RESTRICTIONS.

SHEET TITLE •

HVAC NOTES AND EQUIPMENT SCHEDULE

DRAWN •
CHECKED •
SCALE •
DATE •
JOB •
SHEET •

M-1

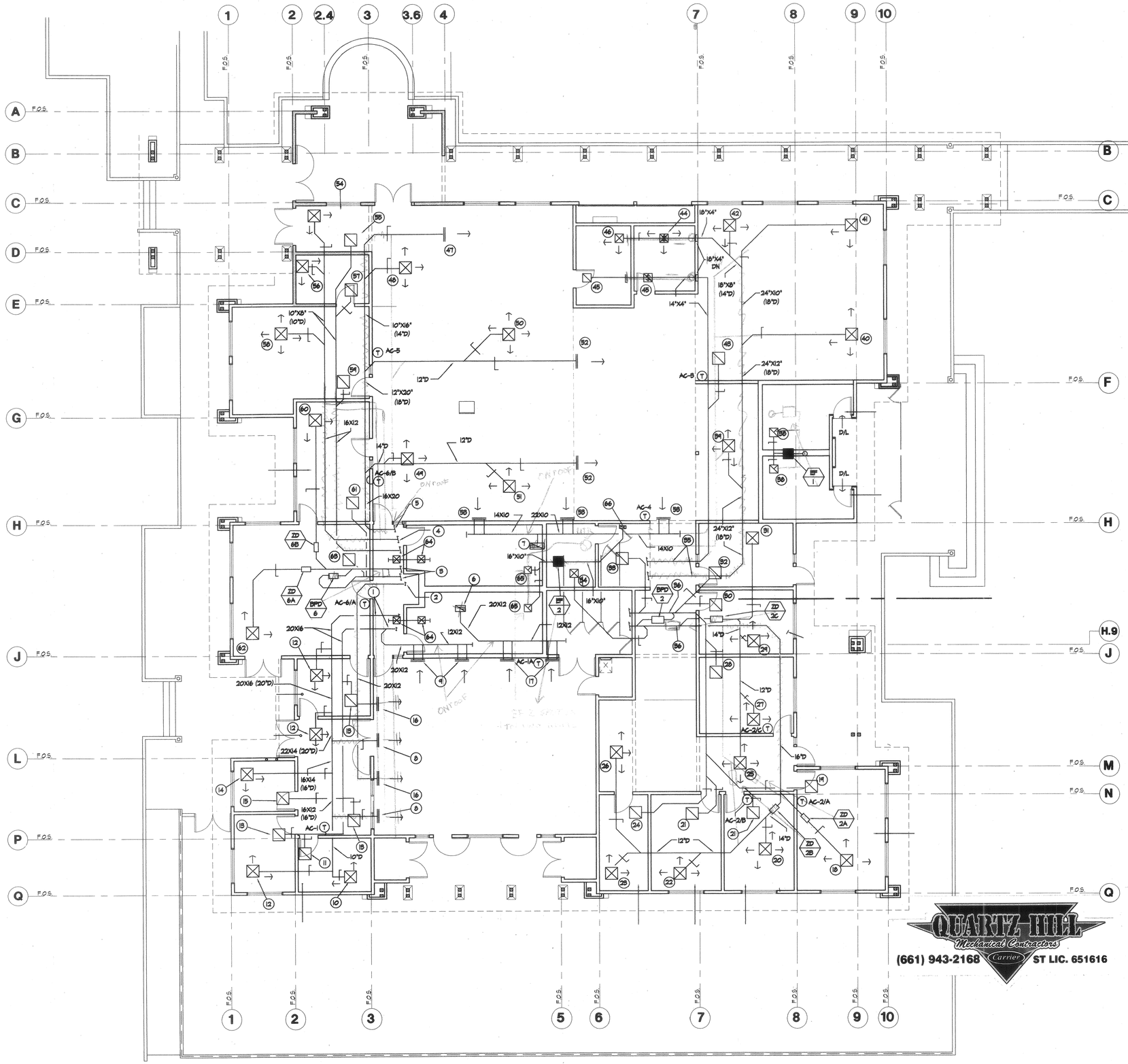

PLAN NOTES

1. 20X16 SAD & RAD FROM AC-1
2. 20X12 SAD FROM AC-1A
3. 18X12 SAD & RAD FROM AC-6
4. 18X12 SAD & RAD FROM AC-5
5. 16X20 SAD FROM AC-4
6. 20X12 RAD FROM AC-1A
8. 18"X10" SWR, 700 CFM
9. 18"X10" RET REGISTER
10. 8"X8" CD, 150 CFM, 2-WAY W/ T'D SAD
11. 8"x8" RR, 120 CFM, W/ T'D RAD
12. 10"X10" CD, 250 CFM, 2-WAY W/ 9"D SAD
13. 8"X8" RR, 200 CFM, W/ 8"D RAD
14. 8"x8" CD, 150 CFM, 2-WAY W/ T'D SAD
15. 6"X6" RR, 100 CFM W/ 6"D RAD
16. 32"X10"" SWR, 800 CFM
17. 32"X10" RET REGISTER
18. 14"x14" CD, 450 CFM, 2-WAY W/ 12"D SAD
19. 12"X12" RR, 360 CFM W/ 12"D RAD
20. 10"X10" CD, 200 CFM, 4-WAY W/ 8"D SAD
21. 8"X8" RR, 160 CFM W/ 8"D RAD
22. 10"X10" CD, 200 CFM, 2-WAY W/ 8"D SAD
23. 6"X6" CD, 100 CFM, 2-WAY W/ 6"D SAD
24. 6"X6" RR, 80 CFM W/ 6"D RAD
25. 12"X12" CD, 350 CFM, 4-WAY W/ 12"D SAD
26. 10"X10" CD, 280 CFM, 3-WAY W/ 9"D SAD
27. 10"X10" CD, 240 CFM, 3-WAY W/ 9"D SAD
28. 10"X10" RR, 200 CFM W/ 8"D RAD
29. 10"X10" CD, 200 CFM, 3-WAY W/ 8"D SAD
30. 8"X8" RR, 160 CFM W/ 8"D RAD
31. 12"X12" CD, 340 CFM, 3-WAY W/ 10"D SAD
32. 10"X10" RR, 270 CFM W/ 9"D RAD
33. 14"X14" RR, 550 CFM W/ 12"D RAD
34. 6"X6" CD, 50 CFM, 3-WAY W/ 6"D SAD
35. 24"X12" SAD AND RAD FROM AC-3
36. 24"X14" SAD AND RAD FROM AC-2
37. 8"X8" CD, 150 CFM, 3-WAY W/ T'D SAD
38. 10"X10" ER, 260 CFM W/ 9"D EAD
39. 10"X10" CD, 250 CFM, 3-WAY W/ 9"D SAD
40. 12"X12" CD, 400 CFM, 4-WAY W/ 10"D SAD
41. 14"X14" CD, 650 CFM, 2-WAY W/ 12"D SAD
42. 12"X12" CD, 400 CFM, 4-WAY W/ 10"D SAD
43. 24"X24" RR, 1200 CFM W/ 16"D RAD
44. 6"X6" CD, 150 CFM, 3-WAY W/ T'D SAD
45. 6"X6" RR, 80 CFM W/ T'D RAD
46. 6"X6" CD, 150 CFM, 2-WAY W/ T'D SAD
47. 16"X10" SWR, 500 CFM W/ 12"D SAD
48. 12"X12" CD, 350 CFM, 3-WAY W/ 10"D SAD
49. 10"X10" CD, 250 CFM, 3-WAY W/ 9"D SAD
50. 12"X12" CD, 350 CFM, 4-WAY W/ 10"D SAD
51. 12"X12" CD, 350 CFM, 3-WAY W/ 10"D SAD
52. 16"X8" SWR, 300 CFM W/ 10"D SAD
53. 20"X8" SWR, 660 CFM
54. 10"X10" CD, 200 CFM, 2-WAY W/ 8"D SAD
55. 8"X8"" RR, 140 CFM
56. 8"x8" CD, 120 CFM, 2-WAY W/ T'D SAD
57. 6"X6" RR, 85 CFM W/ 6"D RAD
58. 16"X16" CD, 680 CFM, 3-WAY W/ 14"X10" (12"D) SAD
59. 14"X14" RR, 480 CFM W/ 12"D SAD
60. 12"X12" CD, 400 CFM, 2-WAY W/ 12"D SAD
61. 12"X12" RR, 300 CFM W/ 12"D RAD
62. 15"X18" CD, 800 CFM, 2-WAY W/ 14"X10" (14"D) SAD
63. 18"X18" RR, 7000 CFM, W/ 14"D RAD
64. 16"X16"" TRANSFER GRILLE, W/ 15"X6" TRANSFER DUCT
65. 12X12"" ER, 400 CFM W/ 12" EAD
66. 16"X10" EAD UTR TO 5'-0" ABOVE OSA INTAKE OF AC-3

BYPASS DAMPER SCHEDULE

SYMBOL	MANUF.	SIZE	AIR QTY, CFM	PRESS DROP, W.G.
BPD-2	CARRIER	14	2250	0.02"
BPD-6	CARRIER	10	900	0.1

ZONE DAMPER SCHEDULE

SYMBOL	MANUF.	SIZE	AIR QTY, CFM	PRESS DROP, W.G.
ZD-2A	CARRIER	8	450	0.013"
ZD-2B	CARRIER	10	780	0.010
ZD-2C	CARRIER	12	1160	0.008
ZD-6A	CARRIER	10	800	0.010
ZD-6B	CARRIER	8	400	0.010

QUARTZ HILL
Mechanical Contractors
Carrier
(661) 943-2168 ST LIC. 651616

KROH/BROESKE
ARCHITECTS
6180 BROCKTON AVE.
RIVERSIDE, CA 92506
TEL 909 788-5940
FAX 909 275-0149

Park and Recreation Offices, White Park
3936 CHESTNUT ST.
RIVERSIDE, CALIFORNIA

CONSULTANTS •

NO.	DATE	REVISION

THIS DRAWING AND THE DESIGNS, ARRANGEMENTS, DEPICTIONS, IDEAS AND OTHER INFORMATION CONTAINED HEREIN CONSTITUTE COPYRIGHTED WORK OF KROH/BROESKE ARCHITECTS AND SHALL REMAIN PROPERTY OF KROH/BROESKE ARCHITECTS IN PERPETUITY. NO PART THEREOF SHALL BE REPRODUCED, COPIED, DISCLOSED, DISTRIBUTED,SOLD, PUBLISHED OR OTHERWISE USED IN ANYWAY WITHOUT THE ADVANCE EXPRESS WRITTEN CONSENT OF KROH/BROESKE ARCHITECTS. VISUAL CONTACT WITH THE ABOVE DRAWINGS, OR ANY PART THEREOF, SHALL CONSTITUTE CONCLUSIVE EVIDENCE OF ACCEPTANCE OF THESE RESTRICTIONS.

SHEET TITLE •

HVAC FLOOR PLAN

DRAWN	•	W.F.
CHECKED	•	AEE
SCALE	•	1/8" = 1' - 0"
DATE	•	
JOB	•	
SHEET	•	

M-2

JAN 26 2001

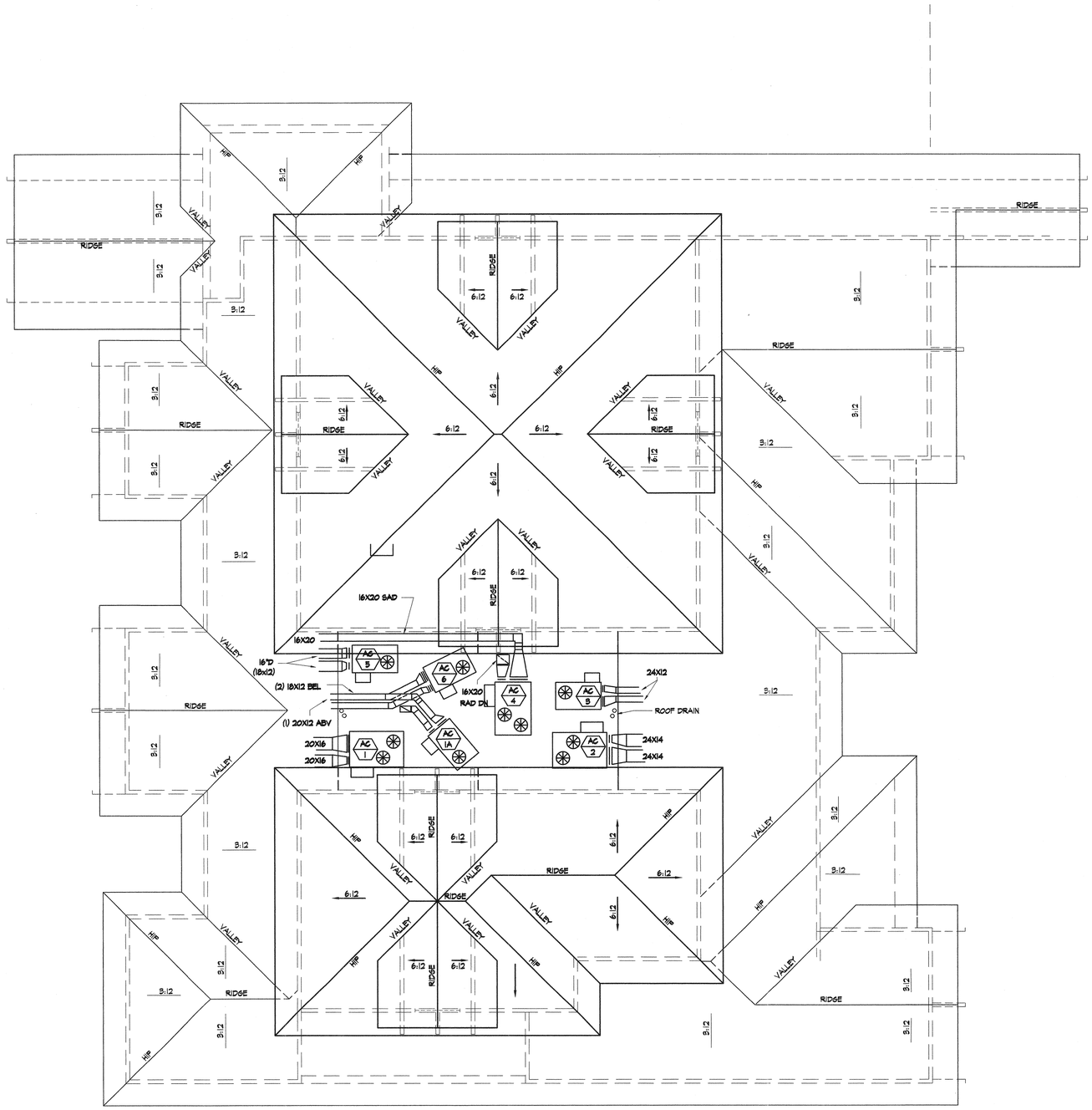

KROH/BROESKE
ARCHITECTS

6180 BROCKTON AVE.
RIVERSIDE, CA 92506
TEL 909 788-5940
FAX 909 275-0149

Parkland Recreation Offices, White Park
3936 CHESTNUT ST.
RIVERSIDE, CALIFORNIA

CONSULTANTS •

NO. DATE REVISION

LICENSED ARCHITECT
JAMES L. BROESKE
No. C009174
Ren 11-30-01
STATE OF CALIFORNIA

THIS DRAWING AND THE DESIGNS, ARRANGEMENTS, DEPICTIONS, IDEAS AND OTHER INFORMATION CONTAINED HEREIN CONSTITUTE UNPUBLISHED WORK OF KROH/BROESKE ARCHITECTS AND SHALL REMAIN PROPERTY OF KROH/BROESKE ARCHITECTS IN PERPETUITY. NO PART THEREOF SHALL BE REPRODUCED, COPIED, DISCLOSED, DISTRIBUTED,SOLD, PUBLISHED OR OTHERWISE USED IN ANYWAY WITHOUT THE ADVANCE EXPRESS WRITTEN CONSENT OF KROH/BROESKE ARCHITECTS. VISUAL CONTACT WITH THE ABOVE DRAWINGS, OR ANY PART THEREOF, SHALL CONSTITUTE CONCLUSIVE EVIDENCE OF ACCEPTANCE OF THESE RESTRICTIONS.

SHEET TITLE •

HVAC ROOF PLAN

DRAWN •
CHECKED •
SCALE •
DATE •
JOB •
SHEET •

M-3

CERTIFICATE OF COMPLIANCE (Part 1 of 2) MECH–1

PROJECT NAME	Park and Recreation Office, White Park		DATE 1–12–00
PROJECT ADDRESS	3936 Chestnut St. Riverside		Building Permit #
PRINCIPAL DESIGNER – MECHANICAL	A. E. ENGINEERING	TELEPHONE 714–668–9080	
DOCUMENTATION AUTHOR	Wing Fung	TELEPHONE 714–668–9080	Check by/Date Enforcement Agency use

GENERAL INFORMATION

DATE OF PLAN | BUILDING CONDITIONED FLOOR AREA 10720 S.F.

BUILDING TYPE: [X] NONRESIDENTIAL [ ] HIGH RISE RESIDENTIAL [ ] HOTEL//MOTEL GUEST ROOM

PHASE OF CONSTRUCTION: [X] NEW CONSTRUCTION [ ] ADDITION [ ] ALTERATION [ ] UNCONDITIONED (file affidavit)

METHOD OF MECHANICAL COMPLIANCE: [X] PRESCRIPTIVE [ ] PERFORMANCE

PROOF OF ENVELOPE COMPLIANCE: [ ] PREVIOUS ENVELOPE PERMIT [X] ENVELOPE COMPLIANCE ATTACHED

STATEMENT OF COMPLIANCE

This certificate of Compliance lists the building features and performance specifications need to comply with Title 24, Parts 1 and 6 of the California Code of Regulations. This certificate applies only to building mechanical requirements.

The documentation preparer hereby certifiess that the documentation is accurate and complete.

DOCUMENTATION AUTHOR	SIGNATURE	DATE
Wing Fung		1–12–00

The Principal Mechanical Designer hereby certifies that the proposed building design represented in this set of construction documents is consistent with the other compliance forms and worksheets, with the specifications, and with any other calculations submitted with this permit application. The proposed building has been designed to meet the mechanical requirements contained in the applicable parts of sections 110 through 115, 120 through 124, 140 through 142, 144 and 145.

Plase check one:

[X] I hereby affirm that I am eligible under the provisions of Division 3 of the Business and Professions Code to sign this document as the person responsible for its preparation; and that I am licensed in the State of California as a civil engineer or mechanical engineer, or I am a licensed architect.

[ ] I affirm that I am eligible under the exemption to Division 3 of the Business and Professions Code by Section 5537.2 or 6737.3 to sign this document as the person responsible for its preparation, and that I am a licensed contractor performing this work.

[ ] I affirm that I am eligible under the exemption to Division 3 of the Business and Professions Code to sign this document because it pertains to a structure or type of work described pursuant to Business and Professions Code Sections 5537, 5538 and 6737.1

(These sections of the Business and Professions Code are printed in full in the Nonresidential Manual.)

PRINCIPAL MECHANICAL DESIGNER – NAME	SIGNATURE	DATE	LIC. #
Wing Fung		1–12–00	M–16715

ENVELOPE MANDATORY MEASURES

Indicate location on plans of Note Block for Mandatory Measures M–1

INSTRUCTIONS TO APPLICANT

For detailed instructions on the use of this and all Energy Efficiency Standards compliance forms, please refer to the Nonresidential Manual published by the California Energy Commision.
MECH–1: Required on plans for all submittals. Part 2 may be incorporated in schedules on plans.
MECH–2: Required for all submittals, but may be incorporated in schedules on plans.
MECH–3: Required for all submittals unless required ventilation rates and airflows are shown on plans. See 4.3.4.
MECH–4: Required for all prescriptive submittals.

CERTIFICATE OF COMPLIANCE (Part 2 of 2) ENV–1

PROJECT NAME Park and Recreation Office, White Park

OPAQUE SURFACES

Surface Type	Construction Type (e.g., Block Wood, Metal)	Area	U–value	Azimuth	Tilt	Solar Gains Y/N	Form 3 Reference	Location/Comments (e.g., Suspended Ceiling, Demising, etc.)	NOTE TO FIELD For Building Dept. Use Only
Wall–1	Wood	1799	0.085	0	90	[X] [ ]	Table B–2	Exterior wall	
Wall–1	Wood	1871	0.085	90	90	[X] [ ]	Table B–2	Exterior wall	
Wall–1	Wood	1799	0.085	180	90	[X] [ ]	Table B–2	Exterior wall	
Wall–1	Wood	1871	0.085	270	90	[X] [ ]	Table B–2	Exterior wall	
Roof–1	wood	10720	0.051	–	–	[ ] [X]	Table B–7	roof /ceiling	
						[ ] [ ]			
						[ ] [ ]			
						[ ] [ ]			
						[ ] [ ]			

FENESTRATION SURFACES

Surface Type	Area	U–value	Azimuth	SHGC	Glazing Type	Location/Comments	NOTE TO FIELD – For Bldg. Dept. Use Only
Window–1	254	1.23	0	0.62	single/tinted		
Window–1	163	1.23	90	0.62	single/tinted		
Window–1	310	1.23	180	0.62	single/tinted		
Window–1	282	1.23	270	0.62	single/tinted		

EXTERIOR SHADING

Fenestration #	Exterior Shade Type	SHGC	Window Height	Window Width	Overhang Length	Overhang Height	Overhang L.Ext.	Overhang R.Ext.	Left Fin Dist.	Left Fin Length	Left Fin Height	Right Fin Dist.	Right Fin Length	Right Fin Height

NOTES TO FIELD – For Building Department Use Only

CERTIFICATE OF COMPLIANCE (Part 1 of 2) ENV–1

PROJECT NAME	Park and Recreation Office, White Park		DATE 1–12–00
PROJECT ADDRESS	3936 Chestnut St. Riverside		Building Permit #
PRINCIPAL DESIGNER – ENVELOPE	Kroh / Broeske Architects	TELEPHONE 909–788–5940	
DOCUMENTATION AUTHOR	A E Engineering	TELEPHONE 714–668–9080	Check by/Date Enforcement Agency use

GENERAL INFORMATION

DATE OF PLAN | BUILDING CONDITIONED FLOOR AREA 10720 s.f. | CLIMATE ZONE 10

BUILDING TYPE: [X] NONRESIDENTIAL [ ] HIGH RISE RESIDENTIAL [ ] HOTEL//MOTEL GUEST ROOM

PHASE OF CONSTRUCTION: [X] NEW CONSTRUCTION [ ] ADDITION [ ] ALTERATION [ ] UNCONDITIONED (file affidavit)

METHOD OF ENVELOPE COMPLIANCE: [ ] COMPONENT [X] OVERALL ENVELOPE [ ] PERFORMANCE

STATEMENT OF COMPLIANCE

This Certificate of compliance lists the building features and performance specifications need to comply with Title 24, Part 1 and 6 of the California Code of Regulations. This certificate applies only to building envelope requirements.

The documentation preparer hereby certifiess that the documentation is accurate and complete.

DOCUMENTATION AUTHOR	SIGNATURE	DATE
WING FUNG		1–12–00

The Principal Envelope Designer hereby certifies that the proposed building design represented in this set of construction documents is consistent with the other compliance forms and worksheets, with the specifications, and with any other calculations submitted with this permit application. The proposed building has been designed to meet the envelope requirements contained in sections 110, 116 through 118, and 140, 142, 143 or 149 of Title 24, Part 6.

Plase check one:

[X] I hereby affirm that I am eligible under the provisions of Division 3 of the Business and Professions Code to sign this document as the person responsible for its preparation; and that I am licensed in the State of California as a civil engineer or mechanical engineer, or I am a licensed architect.

[ ] I affirm that I am eligible under the provisions of Division 3 of the Business and Professions Code by Section 5537.2 or 6737.3 to sign this document as the person responsible for its preparation, and that I am a licensed contractor performing this work.

[ ] I affirm that I am eligible under Division 3 of the Business and Professions Code to sign this document because it pertains to a structure or type of work described as exempt pursuant to Business and Professions Code Sections 5537, 5538 and 6737.1

(These sections of the Business and Professions Code are printed in full in the Nonresidential Manual.)

PRINCIPAL ENVELOPE DESIGNER – NAME	SIGNATURE	DATE	LIC. #
WING FUNG		1–20–00	M–16715

ENVELOPE MANDATORY MEASURES

Indicate location on plans of Note Block for Mandatory Measures

INSTRUCTIONS TO APPLICANT

For detailed instructions on the use of this and all Energy Efficiency Standards compliance forms, please refer to the Nonresidential Manual published by the California Energy Commision.
ENV–1: Required on plans for all submittals. Part 2 may be incorporated in schedules on plans.
ENV–2: Used for all submittals; choose appropriate version depending on method of envelope compliance.
ENV–3: Optional. Use if default U–values are not used. Choose appropriate version for assembly U–value to be calculated.

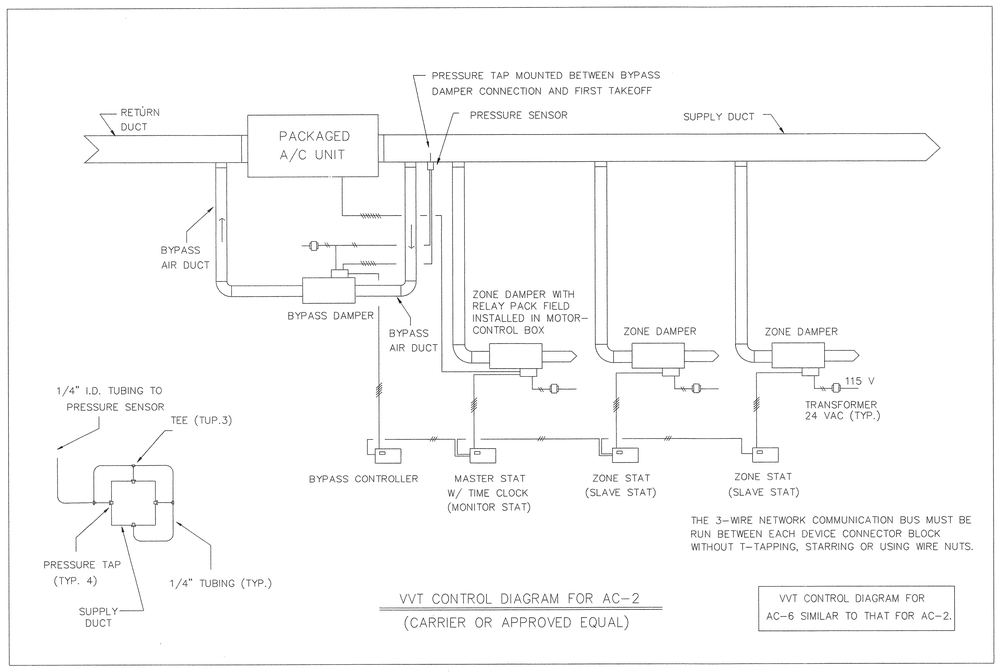

THE 3–WIRE NETWORK COMMUNICATION BUS MUST BE RUN BETWEEN EACH DEVICE CONNECTOR BLOCK WITHOUT T–TAPPING, STARRING OR USING WIRE NUTS.

VVT CONTROL DIAGRAM FOR AC–2
(CARRIER OR APPROVED EQUAL)

VVT CONTROL DIAGRAM FOR AC–6 SIMILAR TO THAT FOR AC–2.

CERTIFICATE OF COMPLIANCE (Part 2 of 2) MECH–1

PROJECT NAME Park and Recreation Office, White Park

SYSTEM FEATURES

SYSTEM NAME	MECHANICAL SYSTEMS AC–1	AC–1A	AC–2	AC–3	AC–4	AC–5	AC–6	NOTE TO FIELD Bldg. Dept. Use
TIME CONTROL	S	S	S	S	S	S	S	
SETBACK CONTROL	B	B	B	B	B	B	B	
ISOLATION ZONES	N	N	N	N	N	N	N	
HEAT PUMP THERMOSTAT?	N	N	N	N	N	N	N	
ELECTRIC HEAT?	N	N	N	N	N	N	N	
FAN CONTROL	N	N	N	N	N	N	N	
VAV MINIMUM POSITION CONTROL?	N	N	N	N	N	N	N	
SIMULTANEOUS HEAT/COOL?	N	N	N	N	N	N	N	
HEAT AND COOL SUPPLY RESET?	N	N	N	N	N	N	N	
VENTILATION	B	B	B	B	B	B	B	
OUTDOOR DAMPER CONTROL?	G	G	G	G	G	G	G	
ECONOMIZER TYPE	A	A	A	A	A	A	A	
DESIGN O.A. CFM (MECH–3, COLUMN H)	400	780	510	270	450	300	110	
HEATING EQUIP. TYPE	GAS FURNACE	GAS FURNACE	GAS FURNACE	GAS FURNACE	GAS FURNACE	GAS FURNACE	GAS FURNACE	
HIGH EFFICIENCY? IF YES EBTER EFF. #	N	N	N					
MAKE AND MODEL NUMBER	CARRIER 48HJD008	CARRIER 48HJD005	CARRIER 48HJD008	CARRIER 48HJD006	CARRIER 48HJD008	CARRIER 48HJE004	CARRIER 48HJE004	
COOLING EQUIP. TYPE	AIR CONDITIONER	AIR CONDITIONER	AIR CONDITIONER	AIR CONDITIONER	AIR CONDITIONER	AIR CONDITIONER	AIR CONDITIONER	
HIGH EFFICIENCY? IF YES EBTER EFF. #	N	N	N	N	N	N	N	
MAKE AND MODEL NUMBER	CARRIER 48HJD008	CARRIER 48HJD005	CARRIER 48HJD008	CARRIER 48HJD006	CARRIER 48HJD008	CARRIER 48HJE004	CARRIER 48HJE004	
PIPE INSULATION REQUIRED?	N/A	N/A	N/A	N/A	N/A	N/A	N/A	
PIPE TYPE (SUPPLY, RETURN, ETC.)	N/A	N/A	N/A	N/A	N/A	N/A	N/A	
HEATING DUCT LOCATION R–VALUE	ABOVE CLG 4.2	ABOVE CLG 4.2	ABOVE CLG 4.2	ABOVE CLG 4.2	ABOVE CLG 4.2	ABOVE CLG 4.2	ABOVE CLG 4.2	
COOLING DUCT LOCATION R–VALUE	ABOVE CLG 4.2	ABOVE CLG 4.2	ABOVE CLG 4.2	ABOVE CLG 4.2	ABOVE CLG 4.2	ABOVE CLG 4.2	ABOVE CLG 4.2	
DUCT TAPE ALLOWED?	YES	YES	YES	YES	YES	YES	YES	

CODE TABLE: Enter code from table below into conlumns above.

HEAT PUMP THERMOSTAT?	Y: Yes N: No
ELECTRIC HEAT?	
VAV MINIMUM POSITION CONTROL?	
SIMULTANEOUS HEAT/COOL?	
HEAT AND COOL SUPPLY RESET?	
HIGH EFFICIENCY?	
DUCT TAPE ALLOWED?	
PIPE INSULATION REQUIRED?	

TIME CONTROL	SETBACK CTRL.	ISOLATION ZONES	FAN CONTROL
S: Prog. Switch O: Occupancy Sersor M: Manual Timer	H: Heating C: Cooling B: Both	Enter number of isolation Zones.	I: Inlet Vanes P: Variable Pitch V: VFD O: Other C: Curve

VENTILATION	OUTDOOR DAMPER	ECONOMIZER	DESIGN O.A. CFM
B: Air Balance C: Outside Air Cert. M: Out. Air Measure D: Demand Control N: Natural	A: Auto G: Gravity	A: Air W: Water N: Not Required	Enter Design Outdoor Air CFM. Note: This shall be no less than Column H on MECH–3.

KROH/BROESKE
ARCHITECTS
6180 BROCKTON AVE.
RIVERSIDE, CA 92506
TEL 909 788-5940
FAX 909 275-0149

3936 CHESTNUT ST.
RIVERSIDE, CALIFORNIA

CONSULTANTS •

NO. DATE REVISION

LICENSED ARCHITECT JAMES L. BROESKE C009174 Ren 11-30-01 STATE OF CALIFORNIA

THIS DRAWING AND THE DESIGNS, ARRANGEMENTS, DEPICTIONS, IDEAS AND OTHER INFORMATION CONTAINED HEREIN CONSTITUTE UNPUBLISHED WORK OF KROH/BROESKE ARCHITECTS AND SHALL REMAIN PROPERTY OF KROH/BROESKE ARCHITECTS IN PERPETUITY. NO PART THEREOF SHALL BE REPRODUCED, COPIED, DISCLOSED, DISTRIBUTED,SOLD, PUBLISHED OR OTHERWISE USED IN ANY MANNER WITHOUT THE PRIOR WRITTEN CONSENT OF KROH/BROESKE ARCHITECTS. VISUAL CONTACT WITH THE ABOVE DRAWINGS OR ANY PART THEREOF, SHALL CONSTITUTE CONCLUSIVE EVIDENCE OF ACCEPTANCE OF THESE RESTRICTIONS.

SHEET TITLE •

CERTIFICATE OF COMPLIANCE

DRAWN •

CHECKED •

SCALE •

DATE •

JOB •

SHEET •

M-4

PLUMBING FIXTURE SCHEDULE

SYMBOL	DESCRIPTION	CW	HW	W	V	TRAP	REMARKS
WC 1	WATER CLOSET HANDICAPPED	1-1/2"	–	3"	2"	INT.	AMERICAN STANDARD MODEL #3043.102 ELONGATED CADET, CHINA -17" RIM HT EXPOSED TOP STUD AND SENSOR OPERATED FLUSH VALVE SOLAN MODEL 111 ES-S FLUSHOMETER, EL-154 TRANSFORM SOLENOID OPERATOR, 1.6 GPF. AND WHITE FRONT OPEN SEAT.
WC 2	WATER CLOSET	1-1/2"	–	3"	2"	INT.	AMERICAN STANDARD MODEL #2234.015 ELONGATED BOWL, MADERA, CHINA WITH EXPOSED TOP STUD AND SENSOR OPERATED FLUSH VALVE SOLAN MODEL 111 ES-S FLUSHOMETER, EL-154 TRANSFORM SOLENOID OPERATOR, 1.6 GPF. AND WHITE FRONT OPEN SEAT.
WC 3	WATER CLOSET	1-1/2"	–	3"	2"	INT.	AMERICAN STANDARD MODEL #2258.125, WALL HUNG ELONGATED BOWL, BACK STUD W/ CONCEALED SENSOR OPERATED FLUSH VALVE IN WALL BOX, SLOAN OPTIMA SYSTEM 152-1.6 WB ES-S FLUSHOMETER, EL-154 TRANSFORM, SOLENOID OPERATOR, 1.6 GPF AND WHITE FRONT OPEN SEAT.
L 1	LAVATORY	1/2"	1/2"	2"	1-1/2"	2"	AMERICAN STANDARD 0476.028, AQUALYN, COUNTERTOP, VITREOUS CHINA, SELF RIM W/ SENSOR OPERATED FAUCET SLOAN ETF-80 AND TRANSFORMER EL-154
L 2	LAVATORY	1/2"	1/2"	2"	1-1/2"	2"	AMERICAN STANDARD LUCERNE WALL-HUNG LAVATORY 20"X18" MODEL # 0355.012 WITH CONSEALED ARMS AND SENSOR OPERATED FAUCET SLOAN ETF-80 AND TRANSFORMER EL-154
U 1	URINAL	3/4"	–	2"	2"	2"	AMERICAN STANDARD 6501.010 WASHBROOK WALL HUNG, TOP STUD W/ EXPOSED SENSOR OPERATED FLUSH VALVE, SLOAN 186-1 ES-S, FLUSHOMETER, 1.0 GPF
U 2	URINAL	3/4"	–	2"	2"	2"	AMERICAN STANDARD 6506.011 WASHBROOK WALL HUNG, BACK STUD W/ CONCEALED SENSOR OPERATED FLUSH VALVE IN WALL BOX, SLOAN 195-1 WB ES-S, FLUSHOMETER 1.0 GPF
FD 1	FLOOR DRAIN	1/4"	–	2"	1-1/2"	2"	J.R.SMITH 2005-A WITN TRAP PRIMER J.R.SMITH 2699
WH 1	WATER HEATER						CHRONOMITE MODEL S-46LP, INSTANT FLOW, TANKLESS, ELEC WATER HEATER 4.6 KW, 208 V, 1 PH, ACTIVATED AT 0.4 GPM, UL AND CEC LISTED
WH 2	WATER HEATER						CHRONOMITE MODEL S-90LP, INSTANT FLOW, TANKLESS, ELEC WATER HEATER 9.0 KW, 208 V, 1 PH, ACTIVATED AT 1.0 GPM, UL AND CEC LISTED
WH 3	WATER HEATER						ARISTON ELEC HEATER, MODEL P-15S, 4 GAL TANK, 1.3 KW, 115 V, 1 PH, UL AND CEC LISTED.
MS 1	MOP SINK	3/4"	3/4"	3"	2"	3"	FIAT SB-2424, PRECAST TERRAZZO WITH FAUCET 830-AA AND VACUUM BREAKER 111
DF 1	DRINKING FOUNTAIN	1/2"	–	2"	1-1/2"	2"	HAWS MODEL HWCD8-2, WALL MOUNTED, S.S., LEAD FREE, WATER COOLER, TWO DUAL HEIGHT ONE PEICE, 1/5 HP MOTOR 115 V, 1 PH, UL LISTED
DF 2	DRINKING FOUNTAIN	1/2"	–	2"	1-1/2"	2"	HAWS 1118, WALL MOUNTED, S.S., LEAD FREE, TWO DUAL HEIGHT ONE PIECE FOUNTAINS
HB 1	HOSE BIBB	3/4"					ACORN #8120 WITN VACUUM BREAKER AND LOCKED WALL BOX
S 1	SINK 112	3/4"	3/4"	2"	2"	2"	ELKAY MODEL LR-2222, SINGLE BOWL, S.S. 18 GAUGE, TYPE 302, SELF RIM, THREE HOLES, W/ MODEL LK-232-S-BH-5 BLADE HANDLES FAUCET & GARBAGE DISPOSAL ~~ISE MODEL 333/SS 1/2 HP, 115V 1 PH~~
S 2	SINK 106	3/4"	3/4"	2"	2"	2"	ELKAY MODEL LR-2222, SINGLE BOWL, S.S. 18 GAUGE, TYPE 302, SELF RIM, THREE HOLES, W/ MODEL LK-232-S-BH-5 BLADE HANDLES FAUCET
RD 1	ROOF DRAIN			4"			J R SMITH DX1010
OD 1	OVERFLOW DRAIN			4"			J R SMITH 1070
RIR 1	ROOF INDIRECT RECEPTOR			2"			J R SMITH 3960
WHA 1	WATER HAMMER ARRESTER						J R SMITH HYDROTROL MODEL 5030
WHA 2	WATER HAMMER ARRESTER						J R SMITH HYDROTROL MODEL 5020

PLUMBING MATERIAL SCHEDULE

SERVICE		COPPER, TYPE 'K'	COPPER, TYPE 'L'	COPPER, TYPE 'M'	SCHED. 40 BLACK STEEL	SCHED. 40 GALV. STEEL	C.I. SOIL PIPE & FITTINGS, S.W.	VITRIFIED CLAY	SCHED. 40 P.V.C.	ABS PLASTIC	REMARK
WATER	INSIDE		●								
	OUTSIDE	●									
SANITARY SEWER	INSIDE						●				
	OUTSIDE						●	●			
SANITARY VENT	INSIDE						●				
	OUTSIDE						●				
GAS	INSIDE				●						
	OUTSIDE				●						
STORM DRAINAGE	INSIDE						●				
	OUTSIDE						●				
CONDENSATE DRAIN	INSIDE			●							
	OUTSIDE			●							

PLUMBING FIXTURE UNIT COUNT

SYMBOL	FIXTURE	COLD WATER			SEWER		
		NO. OF FIXTURE	FIXTURE UNIT/ FIXTURE	TOTAL FIXTURE UNITS	NO. OF FIXTURE	FIXTURE UNIT/ FIXTURE	TOTAL FIXTURE UNITS
WC	WATER CLOSET, FV	8	8	64	8	6	48
LAV	LAVATORY	6	1	6	6	2	12
U	URINAL	3	5	15	3	5	15
DF	DRINKING FOUNTAIN	2	.75	1.5	2	1	2
FD	FLOOR DRAIN	4	–	–	4	2	2
HB	HOSE BIBB	4	2.5	10	4	–	–
MS	MOP SINK	1	3	3	1	3	3
S	SINK	2	1.5	3	2	3	3
TOTAL:				102.5			85

DOMESTIC WATER PRESSURE CALCULATION

PRESSURE AVAILABLE, MINIMUM: 52 – 68 PSI = 52 PSI

PRESSURE REQUIRED AT MOST REMOTE FIXTURE: = 25 PSI

PRESSURE LOSS DUE TO : 102.5 FU (FV)

WATER METER (70 GPM THRU 2 " METER) = 4 PSI

HEIGHT OF FIXTURE = 20 FT X 0.43 PSI/FT = 8.6 PSI

OTHER LOSSES

TOTAL PRESSURE LOSSES = 37.6 PSI

PRESSURE AVAILABLE FOR PIPING FRICTION: = 52 – 37.6 = 14.4 PSI

EQUIVALENT LENGTH OF PIPING = 260 X 1.25 = 325 FT

ALLOWABLE FRICTION LOSS:

$$\frac{14.4 \text{ PSI} \times 100}{325 \text{ FT}} = 4.4 \text{ PSI/100 FT}$$

SIZING OF HOT AND COLD WATER PIPING
(FLUSH VALVE SYSTEM)

PIPE SIZE	GPM AT PSI/100'	FIXTURE UNIT VALVE	FIXTURE UNIT TANK	PIPE SIZE	GPM AT PSI/100'	FIXTURE UNIT VALVE	FIXTURE UNIT TANK
1/2"	2.25	–	1	3"			
3/4"	6	–	7	3-1/2"			
1"	13	–	18	4"			
1-1/4"	23	6	36				
1-1/2"	35	20	66				
2"	74	124	245				
2-1/2"							

PLUMBING LEGEND

SYMBOL	ABBRE.	DESCRIPTION
————	S OR W	SOIL OR WASTE ABOVE FLOOR
— — — —	S OR W	SOIL OR WASTE BELOW FLOOR
—— SD ——	SD	STORM DRAIN ABOVE FLOOR
— — SD — —	SD	STORM DRAIN BELOW FLOOR
—— OD ——	OD	OVERFLOW DRAIN ABOVE FLOOR
— — OD — —	OD	OVERFLOW DRAIN BELOW FLOOR
————	V	VENT
—— – ——	CW	COLD WATER
—— – – ——	HW	HOT WATER
—— – – – ——	HWR	HOT WATER RETURN
—— G ——	G	GAS
	FCO/COTG	FLOOR CLEANOUT/CLEANOUT TO GRADE
	COYB	CLEANOUT IN YARD BOX
	WCO	WALL CLEANOUT
	SOV	SHUT OFF VALVE
	BC	BALANCING COCK
	GC	GAS COCK
	P/T RV	PRESSURE/TEMPERATURE RELIEF VALVE
	U	UNION
	HB	HOSS BIBB
	WHA	WATER HAMMER ARRESTOR
—— CD ——	CO	CONDENSATE DRAIN

ABBRE.	DESCRIPTION	ABBRE.	DESCRIPTION
ABV	ABOVE	I.E.	INVERT ELEVATION
A/C	AIR CONDITIONING	INV.	INVERT
A.P.	ACCESS PANEL	LAT'L	LATERAL
BEL.	BELOW	M.H.	MANHOLE
BR.	BRANCH	N.I.C.	NOT IN CONTACT
CLG.	CEILING	O.F.D.	OVERFLOW DRAIN
CFH	CUBIC FEET PER HOUR	P.O.C.	POINT OF CONNECTION
&	–DITTO–	PRESS.	PRESSURE
CONN.	CONNECT(ION)	P.R.V.	PRESSUR REDUCE VALVE
CONT.	CONTINUE(ATION)	REQ'D	REQUIRED
DET.	DETAIL	RECOV	RECOVERY
DN.	DOWN	R.I. & C.	ROUGH-IN & CONNECT
D.S.	DOWNSPOUT	SHT	SHEET
EA.	EACH	TEMP.	TEMPERATURE
EXIST.	EXISTING	TERM.	TERMINATE
FIN.	FINISH(ED)	TYP.	TYPICAL
FLR.	FLOOR	VTR.	VENT THRU. ROOF
GR.	GRADE / GROUND	W/	WITH
GHP	GALLONS PER HOUR	@	AT
GPM	GALLONS PER MINUTE		
HDR.	HEADER		
HTR.	HEATER		

PLUMBING SYSTEM MANDATORY MEASURES

1. SERVICE WATER HEATING SYSTEM OR EQUIPMENT SHALL BE CERTIFIED THAT IT MEETS OR EXCEEDS ALL APPLICABLE EFFICIENCY REQUIREMENTS LISTED IN APPLIANCE EFFICIENCY REGULATIONS OR APPENDIX B, TABLE B-9.
2. EQUIPMENT SHALL HAVE AUTOMATIC TEMPERATURE CONTROLS CAPABLE OF ADJUSTMENT OF TEMPERATURE.
3. TEMPERATURE CONTROLS FOR PUBLIC LAVATORIES SHALL LIMIT TO 110 F. AND A FLOW RATE OF 0.5 GPM.
4. IF HOT WATER CIRCULATING SYSTEM IS INSTALLED, IT SHALL HAVE AUTOMATIC CONTROL TO TURN OFF CIRCULATING PUMP(S) WHEN HOT WATER IS NOT REQUIRED.

PLUMBING NOTES

1 VERIFICATION: BEFORE COMMENCEMENT OF WORK, THE CONTRACTOR SHALL VERIFY THE EXACT LOCATIONS, ELEVATIONS, AND CHARACTERISTICS OF ALL UTILITIES AND PIPING INCLUDING ALL EXISTING PLUMBING SYSTEMS AND SHALL IMMEDIATELY NOTIFY THE ARCHITECT OF ANY DISCREPANCIES.

2 COORDINATION OF REQUIREMENTS: BEFORE FABRICATION OR INSTALLATION, THE CONTRACTOR SHALL VERIFY EXACT LOCATIONS OF ALL MECHNICAL EQUIPMENT AND EQUIPMENT PROVIDED UNDER ANOTHER SECTION OF SPECIFICATIONS. EXACT ROUGH-IN LOCATIONS AND REQUIREMENTS SHALL BE COORDINATED IN FIELD. REFER TO THE SPECIFICATIONS.

3 FIXTURE LOCATIONS AND MOUNTING HEIGHTS: EXACT LOCATIONS AND MOUNTING HEIGHTS OF PLUMBING FIXTURES SHALL BE OBTAINED FROM THE ARCHITECTURAL DRAWINGS.

4 HANDICAP REQUIREMENTS: SEE ARCHITECTURAL DRAWINGS FOR HANDICAP FIXTURE LOCATIONS AND MOUTING HEIGHTS. (INSULATE ALL EXPOSED HOT WATER AND DRAIN PIPING BELOW HANDICAP LAVATORIES AND SINKS WITH ARMSTRONG "ARMO-FLEX" OR EQUAL)

5 UTILITY CONNECTONS: THE CONTRACTOR SHALL MAKE ALL ARRANGEMENTS WITH UTILITY COMPANIES FOR SERVICE AND CONNECTION AND SHALL MAKE APPLICATIONS FOR SERVICE IN THE NAME OF THE OWNER.

6. VALVES IN YARD: ALL EXTERIOR GAS COCKS AND WATER SHUT OFF VALVES SHALL BE INSTALLED IN YARD BOXES WITH THE COVERS CONSPICUOUSLY MARKED "GAS SHUT-OFF" AND "WATER SHUT-OFF" RESPECTIVELY.

7. INTERFERENCE WITH EQUIPMENT: ALL PLUMBING WORK SHALL BE INSTALLED SO AS TO AVOID INTERFERENCE WITH ELECTRICAL AND MECHANICAL EQUIPMENT AND STRUCTURAL FRAMING.

8. CUTTING: ALL CUTTING OF EXISTING PAVING, WALKS AND/OR FLOORS SHALL BE MACHINE SAW CUTTING. HOLES FOR PIPES IN CONCRETE WALLS OR FLOORS SHALL BE DONE USING CORE DRILLING EQUIPMENT.

9. PATCHING AND REPAIRS: THE CONTRACTOR SHALL BE RESPONSIBLE FOR PATCHING AND REPAIRING ALL PAVED AREAS WHICH ARE EXCAVATED AND/OR DAMAGED BY HIS OPERATIONS. IN ADDITION, THE CONTRACTOR SHALL RESTORE TO THEIR ORIGINAL CONDITION, ALL PLANTED AREAS DAMAGED BY HIS OPERATIONS.

10. CEILING ACCESS: THE CONTRACTOR SHALL COORDINATE THE LOCATION OF ALL CEILING ACCESS PANELS WITH THE ARCHITECTURAL REFLECTED CEILING PLAN AND THE ELECTRICAL LIGHTING LAYOUT.

11. INCOMPATIBLE MATERIALS: CONNECTION BETWEEN INCOMPATIBLE MATERIALS ABOVE GRADE AND INSIDE BUILDING SHALL BE MADE WITH TWO DIELECTRIC UNIONS SEPARATED BY A 12 INCH SECTION OF RED BRASS PIPE.

12. EXPOSED GAS PIPING: ALL GAS PIPING EXPOSED ON ROOF SHALL BE SCHEDULE 40 GALVANIZED STEEL NAILED TO 2" X 4" REDWOOD BLOCKING WITH PIPE STRAPS

13. INDIRECT WASTE PIPING: ALL INDIRECT WASTE PIPING ON ROOF SHALL BE TYPE "M" COPPER NAILED TO 2"X 4" REDWOOD BLOCKING WITH PIPE STRAPS.BLOCKING SHALL BE SLOPED TO AND TERMINATED AT AN APPROVED RECEPTOR.

14. ELEVATION OF HORIZONTAL PIPING: ALL HORIZONTAL PIPING LINES EXTENDED AND CONNECTED TO EQUIPMENT SHALL BE RUN AT THE HIGHEST POSSIBLE ELEVATIONS AND NOT LESS THAN 6' ABOVE THE FLOOR TO PROVIDE CLEARANCE FOR CLEANING. AT WALL OR COLUMN LOCATIONS, PIPING ROUGH-IN SHALL BE STUBBED IN WALLS WHENEVER POSSIBLE.

15. VENTS: VENTS THROUGH ROOF SHALL BE INSTALLED 10'-0" FROM, OR TERMINATED 3'-0" ABOVE ANY FRESH AIR INTAKES.

16. INSULATION OF HOT WATER PIPING: ALL HOT WATER PIPING SHALL BE INSULATED WITH "MANVILLE" "MICRO-LOCK" 650-APT. 1" THICK FOR SIZES UP TO 2". 1-1/2" THICK FOR SIZES 2-1/2" AND LARGER. K FACTOR=0.23

17. CLEANOUT REQUIREMENTS: ALL CLEANOUTS SHALL BE INSTALLED WHERE READILY ACCESSIBLE. THE CONTRACTOR SHALL COORDINATE ALL CLEANOUT LOCATIONS WITH EQUIPMENT, CABINETS, ETC., AND THE ARCHITECT PRIOR TO ANY INSTALLATION.

18. CLEANOUT LOCATIONS: PROVIDED AND INSTALL WALL CLEANOUTS ON THE UPPER TERMINAL OF ALL VENTS BELOW FLOORS.

19. COORDINATION WITH MECHANICAL SPECIFICATIONS: THESE DRAWINGS SHALL BE READ IN CONJUNCTION WITH AND BE CONSIDERED TO BE A PART OF A SEPARATE AND COMPLETE MECHANICAL SPECIFICATION.

20. PIPING INTO FLOOR-SINKS AND FLOOR-DRAINS: ALL PIPING DISCHARGING INTO FLOOR-SINKS AND/OR FLOOR-DRAINS TO HAVE A MINIMUM AIR-GAP AS REQUIRED BY LOCAL CODES.

21. SIZES: ALL VALVES, UNIONS, ETC., TO BE SAME SIZE AS LINE SIZE UNLESS OTHERWISE INDICATED ON DRAWINGS.

22. UNIONS: UNIONS SHALL BE PROVIDED AND INSTALLED AFTER EACH SCREW-TYPE VALVE AND PRIOR TO EQUIPMENT CONNECTIONS, PROVIDE AND INSTALL ISOLATION UNIONS ON ALL CONNECTIONS BETWEEN DISSIMILAR METALS.

23. CONNECTION FOR POTABLE WATER PIPING: SWEAT COPPER TYPE WITH 95/5 OR 96/4 TIN-ANTIMONY OR SILVABRITE 100 SOLDER. USE ONLY LEAD FREE SOLDER

24. PROVIDE WHEEL HANDLE ANGLE STOP VALVE FOR HOT OR COLD WATER PIPING CONNECTION TO FIXTURES.

25. EQUIPMENT SUPPORT: ALL EQUIPMENT SHALL BE LATERALLY SUPPORTED IN ALL DIRECTIONS TO RESIST A MINIMUM OF 20% OF THE EQUIPMENT'S OPERATING WEIGHT.

26. PROJECT WORK REQUIREMENTS: IT IS THE INTENTION OF THE PLANS AND SPECIFICATIONS TO COVER ALL THINGS REQUIRED TO MAKE COMPLETE AND OPERATIVE SYSTEM. CONTRACTOR IS TO FURNISH ALL LABOR, MATERIALS, TRANSPORTATION, EQUIPMENT, MISCELLANEOUS SERVICES, ETC. REQUIRED TO ACCOMPLISH THIS RESULT. ANYTHING THAT MAY BE REASONABLY CONSTRUED AS A NECESSARY PART OF THE INSTALLATION IS TO BE INCLUDED, WHETHER SPECIFICALLY SHOWN OR MENTIONED. THE ENGINEER WILL GIVE ANY INTERPRETATIONS NECESSARY FOR THE CONTRACTOR TO PROPERLY ESTIMATE THE JOB.

27. PERFORM LEAK TEST FOR WASTE AND VENT SYSTEM BY FILL WASTE AND VENT PIPES WITH WATER TO 15 FEET ABOVE HIGHEST SEWER OR VENT LINE TO BE TESTED. THE SYSTEM SHALL SHOW NO LEAKS FOR 4 HOURS. TEST THE RAIN WATER DRAINAGE SYSTEM IN THE SAME MANNER.

28. PERFORM LEAK TEST FOR FUEL GAS SYSTEM WITH AIR AT 60 PSIG FOR 4 HOURS AND SHOW NO DROP IN PRESSURE.

29. PERFORM LEAK TEST FOR DOMESTIC HOT AND COLD WATER SYSTEM AT 150 PSIG HYDROSTATIC PRESSURE FOR 4 HOURS AND SHOW NO LEAKS.

30. STERILIZE POTABLE WATER SYSTEM WITH SOLUTION CONTAINING 200 PPM OF CHLORINE AND MAINTAINING A PH OF 7.5 MIMUMUM. ALLOW STERILIZATION SOLUTION TO REMAIN FOR 24 HOURS AND OPEN AND CLOSE VALVES AND FAUCET SEVERAL TIMES THAT TIMES.

AFTER STERILIZATION, FLUSH SOLUTION FROM THE SYSTEM WITH CLEAN WATER UNTIL RESIDUAL CHLORINE CONTENT IS LESS THAT 0.2 PPM.

31. CODES: ALL WORK AND MATERIALS SHALL BE PERFORMED AND INSTALLED IN COMPLIANCE WITH THE FOLLOWING CODES AS ADOPTED AND AMENDED BY THE INSPECTION AUTHORITY. NOTHING IN THESE DRAWING IS TO BE CONSTRUED TO PERMIT WORK NOT CONFORMING TO THESE CODES OR OTHER APPLICABLE TO THIS PROJECT.

A. UNIFORM BUILDING CODE.
B. UNIFORM MECHANICAL CODE.
C. UNIFORM PLUMBING CODE.
D. NATIONAL ELECTRICAL CODE
E. CALIFORNIA ADMINISTRATIVE CODE, TITLES (S)

KROH/BROESKE
A R C H I T E C T S

6180 BROCKTON AVE.

RIVERSIDE, CA 92506

TEL 909 788-5940

FAX 909 275-0149

Park and Recreation
Offices, White Park
3936 CHESTNUT ST.
RIVERSIDE, CALIFORNIA

CONSULTANTS •

NO. DATE REVISION

LICENSED ARCHITECT JAMES L. BROESKE No. C009174 Ren 11-30-01 STATE OF CALIFORNIA

THIS DRAWING AND THE DESIGNS, ARRANGEMENTS, DEPICTIONS, IDEAS AND OTHER INFORMATION CONTAINED HEREIN CONSTITUTE UNPUBLISHED WORK OF KROH/BROESKE ARCHITECTS AND SHALL REMAIN PROPERTY OF KROH/BROESKE ARCHITECTS IN PERPETUITY. NO PART THEREOF SHALL BE REPRODUCED, COPIED, DISCLOSED, DISTRIBUTED,SOLD, PUBLISHED OR OTHERWISE USED IN ANYWAY WITHOUT THE ADVANCE EXPRESS WRITTEN CONSENT OF KROH/BROESKE ARCHITECTS. VISUAL CONTACT WITH THE ABOVE DRAWINGS, OR ANY PART THEREOF, SHALL CONSTITUTE CONCLUSIVE EVIDENCE OF ACCEPTANCE OF THESE RESTRICTIONS.

SHEET TITLE •

PLUMBING NOTES AND FIXTURE SCHEDULE

DRAWN •

CHECKED •

SCALE •

DATE •

JOB •

SHEET •

P-1

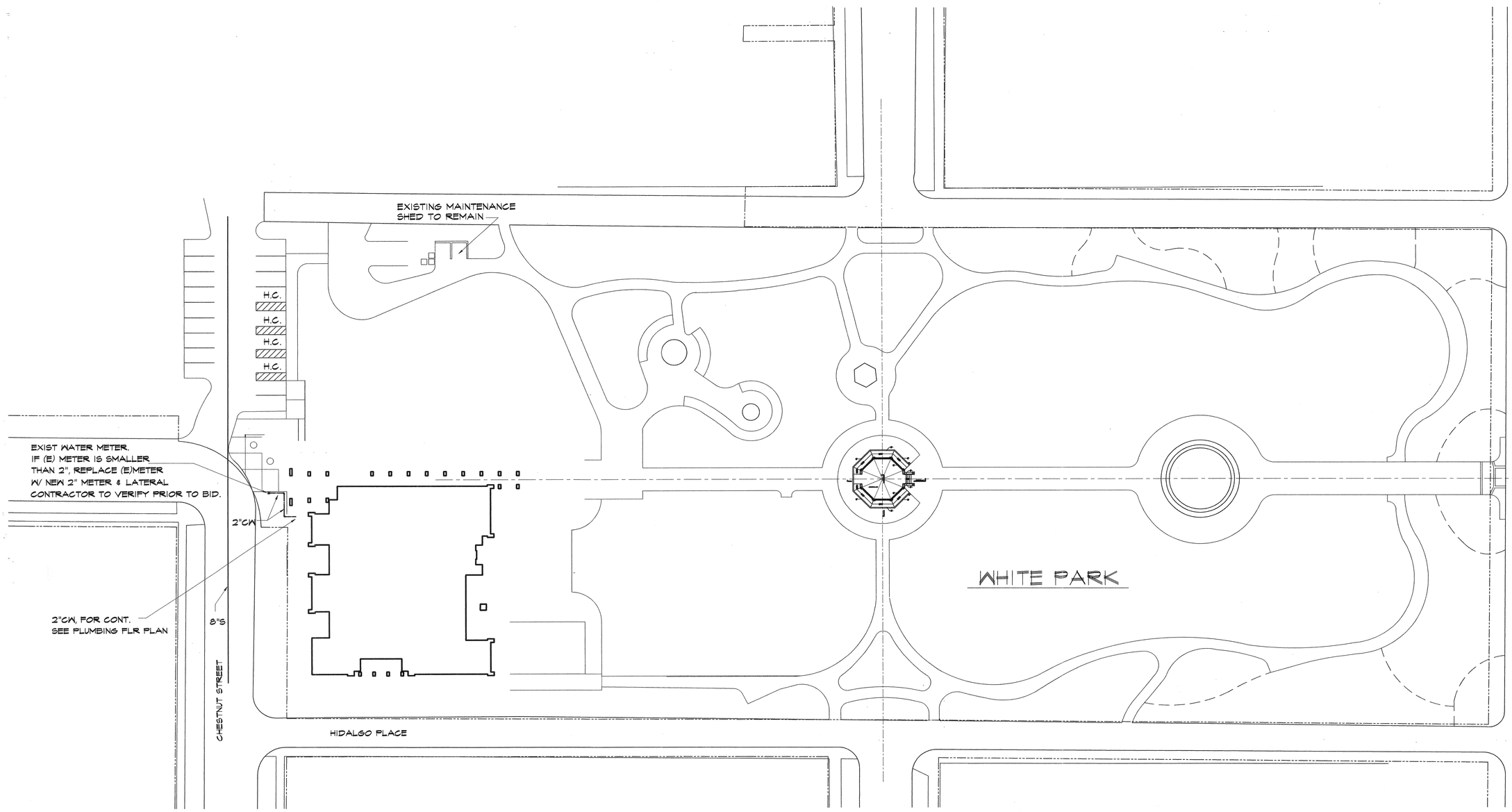

KROH/BROESKE
ARCHITECTS

6180 BROCKTON AVE.
RIVERSIDE, CA 92506
TEL 909 788-5940
FAX 909 275-0149

Park and Recreation Offices, White Park
3936 CHESTNUT ST.
RIVERSIDE, CALIFORNIA

CONSULTANTS •

NO. DATE REVISION

LICENSED ARCHITECT
JAMES L. BROESKE
No. C009174
Ren 11-30-01
STATE OF CALIFORNIA

THIS DRAWING AND THE DESIGNS, ARRANGEMENTS, DEPICTIONS, IDEAS AND OTHER INFORMATION CONTAINED HEREIN CONSTITUTE UNPUBLISHED WORK OF KROH/BROESKE ARCHITECTS AND SHALL REMAIN PROPERTY OF KROH/BROESKE ARCHITECTS IN PERPETUITY. NO PART THEREOF SHALL BE REPRODUCED, COPIED, DISCLOSED, DISTRIBUTED/SOLD, PUBLISHED OR OTHERWISE USED IN ANYWAY WITHOUT THE ADVANCE EXPRESS WRITTEN CONSENT OF KROH/BROESKE ARCHITECTS. VISUAL CONTACT WITH THE ABOVE DRAWINGS, OR ANY PART THEREOF, SHALL CONSTITUTE CONCLUSIVE EVIDENCE OF ACCEPTANCE OF THESE RESTRICTIONS.

SHEET TITLE •

PLUMBING SITE PLAN

DRAWN •
CHECKED •
SCALE •
DATE •
JOB •
SHEET •

P-1.1

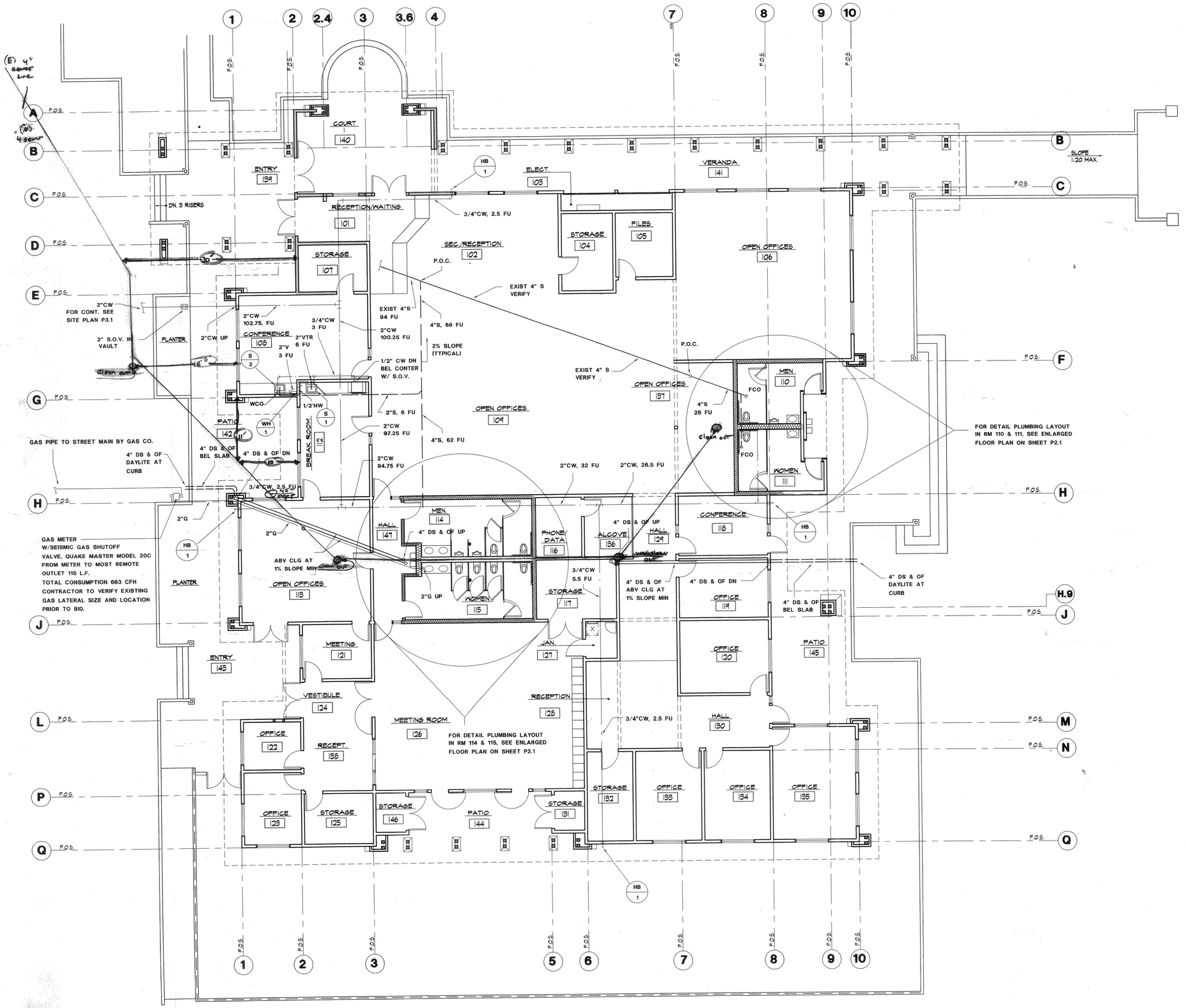

KROH/BROESKE
ARCHITECTS

6180 BROCKTON AVE.
RIVERSIDE, CA 92506
TEL 909 788-5940
FAX 909 275-0149

Park and Recreation Offices, White Park
3936 CHESTNUT ST.
RIVERSIDE, CALIFORNIA

CONSULTANTS •

NO.	DATE	REVISION

THIS DRAWING AND THE DESIGNS, ARRANGEMENTS, DEPICTIONS, IDEAS AND OTHER INFORMATION CONTAINED HEREIN CONSTITUTE UNPUBLISHED WORK OF KROH/BROESKE ARCHITECTS AND SHALL REMAIN PROPERTY OF KROH/BROESKE ARCHITECTS IN PERPETUITY. NO PART THEREOF SHALL BE REPRODUCED, COPIED, DISCLOSED, DISTRIBUTED,SOLD, PUBLISHED OR OTHERWISE USED IN ANYWAY WITHOUT THE ADVANCE EXPRESS WRITTEN CONSENT OF KROH/BROESKE ARCHITECTS. VISUAL CONTACT WITH THE ABOVE DRAWINGS, OR ANY PART THEREOF, SHALL CONSTITUTE CONCLUSIVE EVIDENCE OF ACCEPTANCE OF THESE RESTRICTIONS.

SHEET TITLE •

PLUMBING & FLOOR PLAN

ASBUILT Sewer

DRAWN	•	W.F.
CHECKED	•	AEE
SCALE	•	1/8" = 1'-0"
DATE	•	
JOB	•	
SHEET	•	

P-2

PC #00-0821

JAN 26 2001

CONSTRUCTION SET

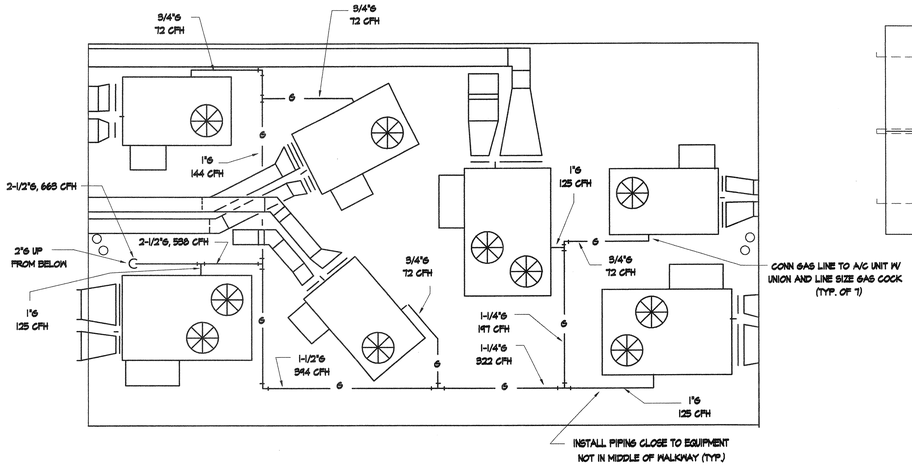

ENLARGED PARTIAL ROOF PLAN - FUEL GAS 1/4" = 1'-0"

INSTALL PIPING CLOSE TO EQUIPMENT
NOT IN MIDDLE OF WALKWAY

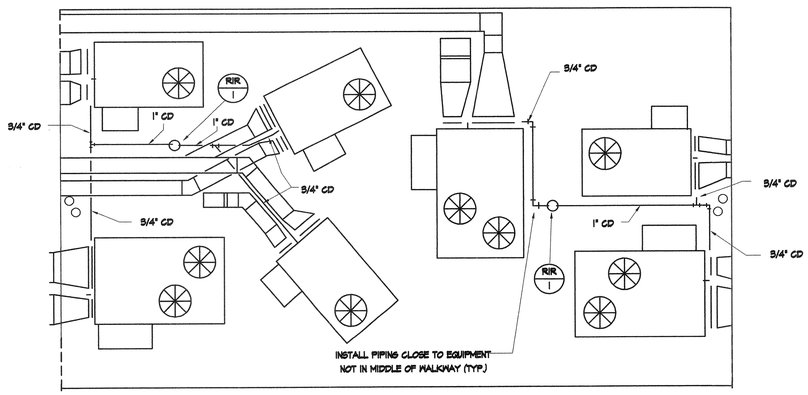

ENLARGED PARTIAL ROOF PLAN - CONDENSATE DRAIN 1/4" = 1'-0"

INSTALL PIPING CLOSE TO EQUIPMENT
NOT IN MIDDLE OF WALKWAY

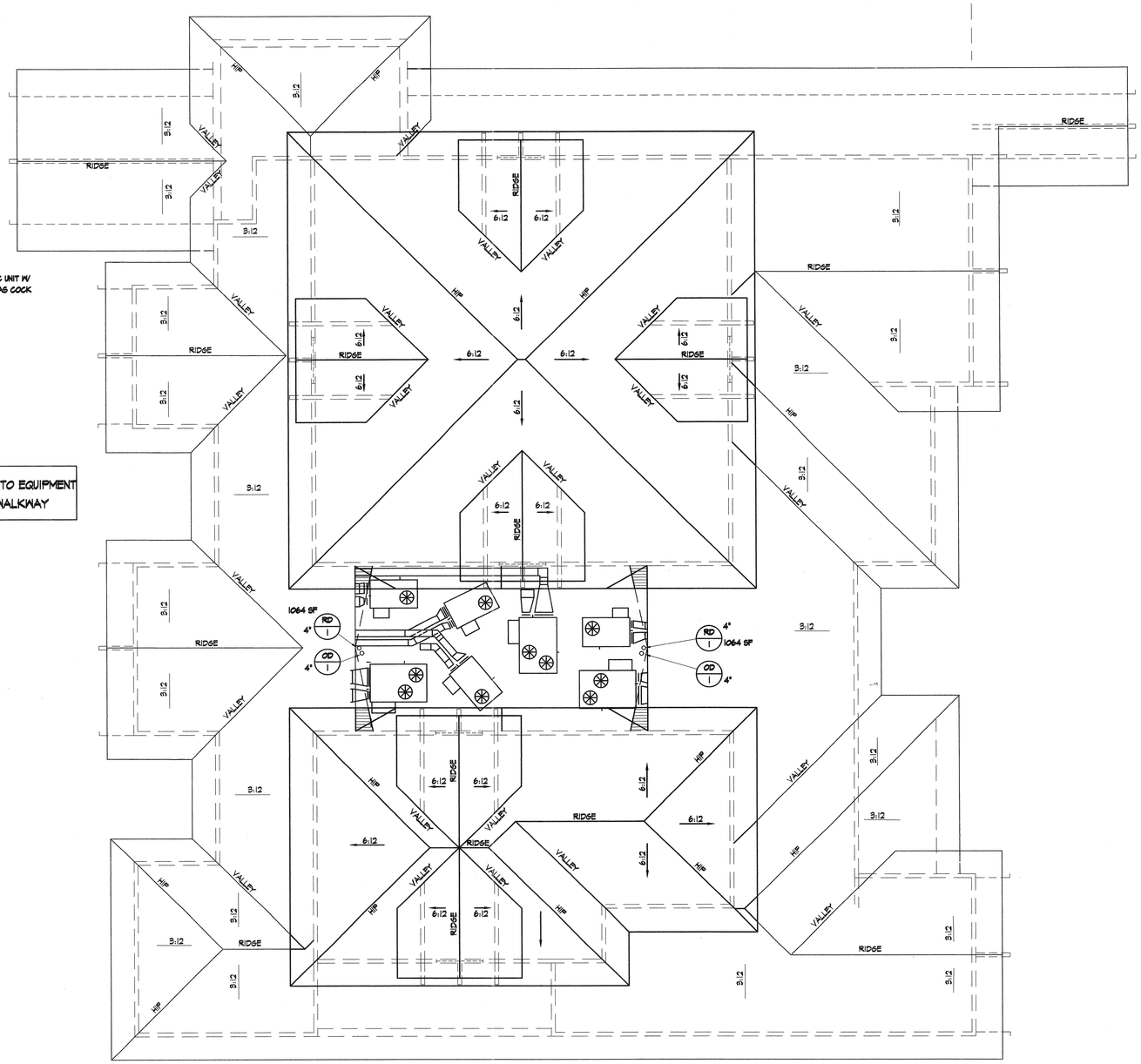

ROOF PLAN 1/8" = 1'-0"

KROH/BROESKE
ARCHITECTS
6180 BROCKTON AVE.
RIVERSIDE, CA 92506
TEL 909 788-5940
FAX 909 275-0149

Park and Recreation Offices, White Park
3936 CHESTNUT ST.
RIVERSIDE, CALIFORNIA

CONSULTANTS •

NO.	DATE	REVISION

LICENSED ARCHITECT
JAMES L. BROESKE
C009174
Ren 11-30-07
STATE OF CALIFORNIA

THIS DRAWING AND THE DESIGNS, ARRANGEMENTS, DEPICTIONS, IDEAS AND OTHER INFORMATION CONTAINED HEREIN CONSTITUTE UNPUBLISHED WORK OF KROH/BROESKE ARCHITECTS AND SHALL REMAIN PROPERTY OF KROH/BROESKE ARCHITECTS IN PERPETUITY. NO PART THEREOF SHALL BE REPRODUCED, COPIED, DISCLOSED OR USED IN ANY MANNER WHATSOEVER WITHOUT USED IN ANYWAY WITHOUT THE EXPRESS AND WRITTEN CONSENT OF KROH/BROESKE ARCHITECTS. VISUAL CONTACT WITH THIS ABOVE DRAWINGS, OR ANY PART THEREOF, SHALL CONSTITUTE CONCLUSIVE EVIDENCE OF ACCEPTANCE OF THESE RESTRICTIONS.

SHEET TITLE •

PLUMBING ROOF PLAN

DRAWN	•	W.F.
CHECKED	•	ABE
SCALE	•	AS NOTED
DATE	•	
JOB	•	
SHEET	•	

P-3

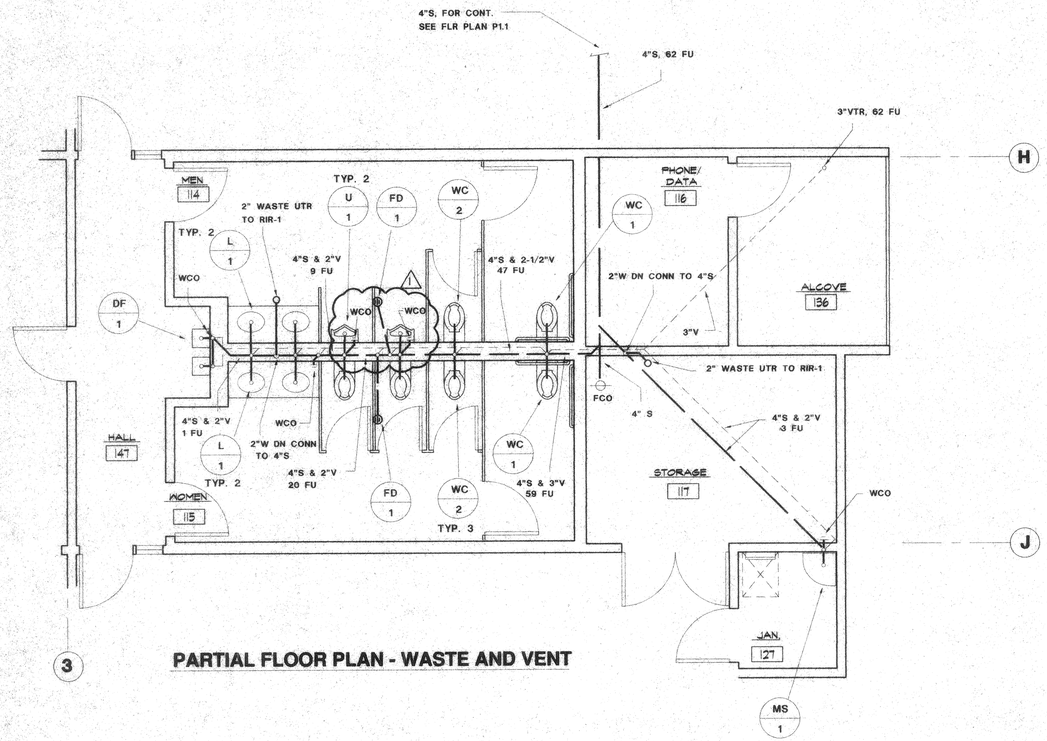

PARTIAL FLOOR PLAN - WASTE AND VENT

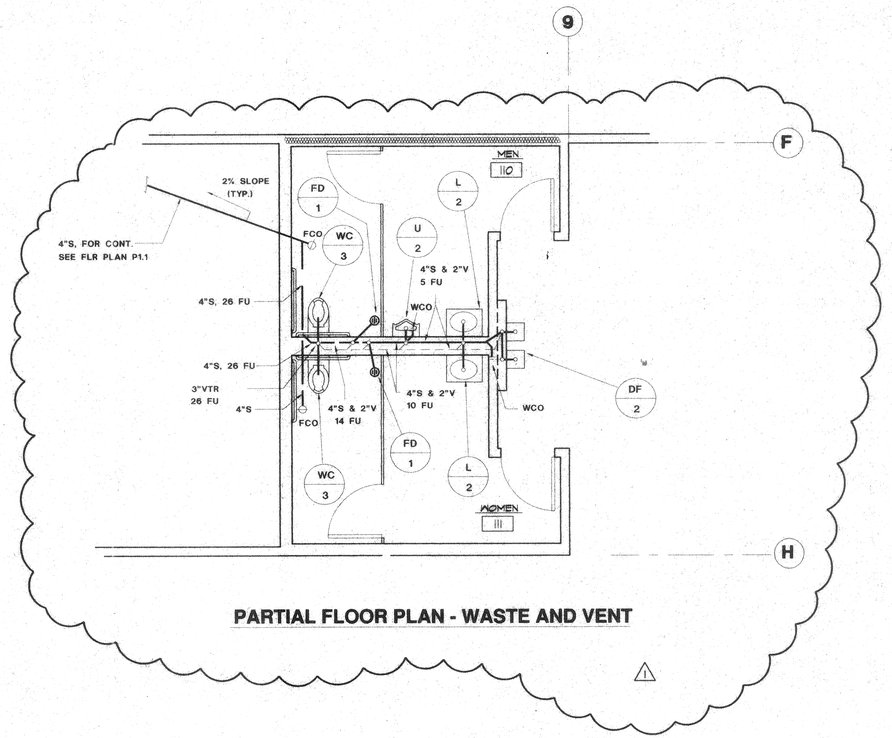

PARTIAL FLOOR PLAN - WASTE AND VENT

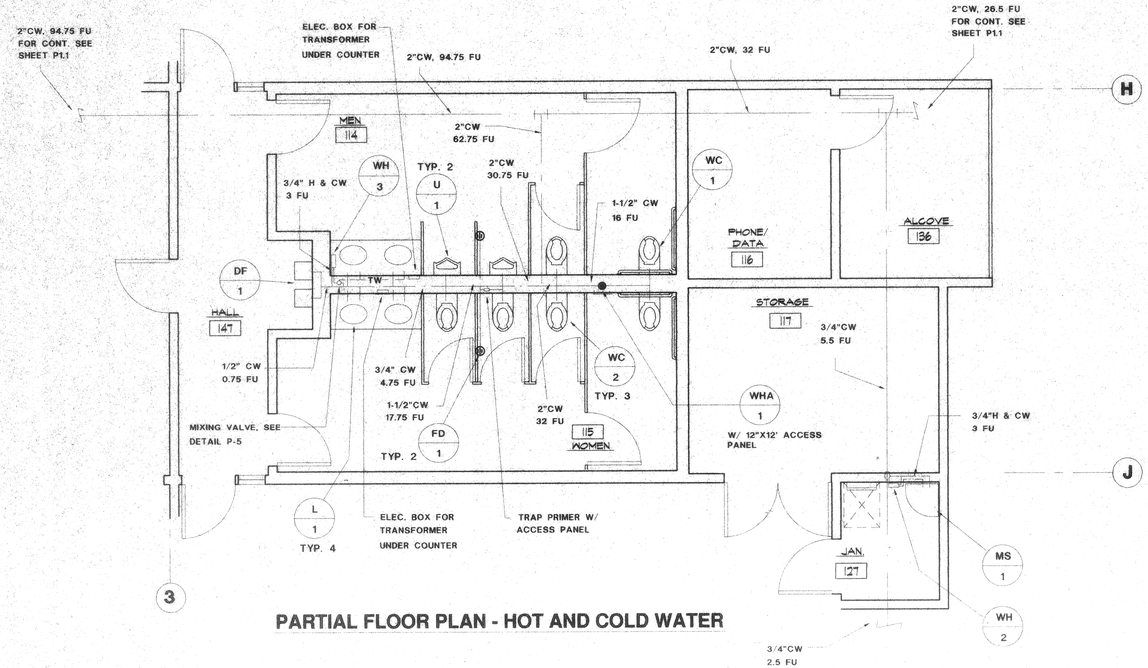

PARTIAL FLOOR PLAN - HOT AND COLD WATER

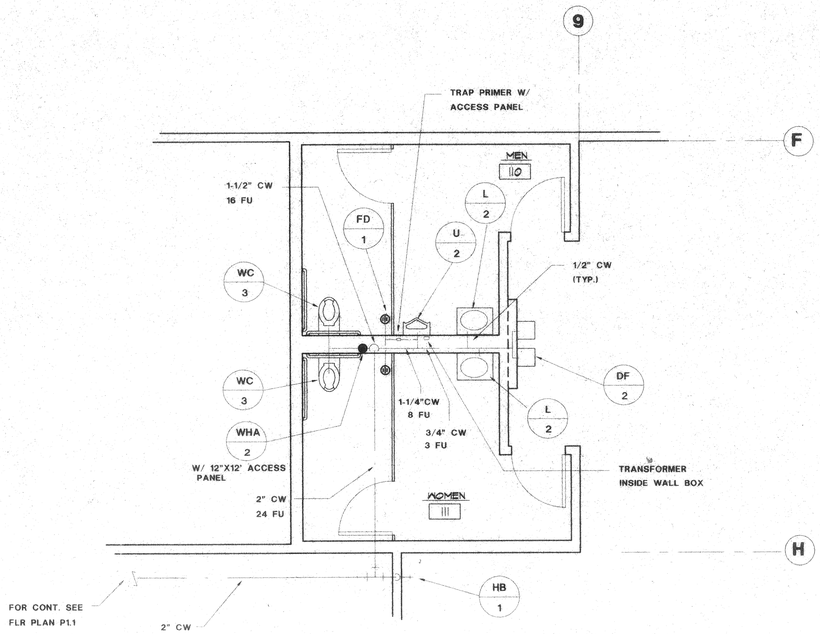

PARTIAL FLOOR PLAN - HOT AND COLD WATER

KROH/BROESKE
ARCHITECTS
6180 BROCKTON AVE.
RIVERSIDE, CA 92506
TEL 909 788-5940
FAX 909 275-0149

Park and Recreation
Offices, White Park
3936 CHESTNUT ST.
RIVERSIDE, CALIFORNIA

CONSULTANTS •

NO.	DATE	REVISION
1	5-5-00	

LICENSED ARCHITECT
JAMES L. BROESKE
No. C009174
Ren 11-30-00
STATE OF CALIFORNIA

THIS DRAWING AND THE DESIGNS, ARRANGEMENTS, DEPICTIONS, IDEAS AND OTHER INFORMATION CONTAINED HEREIN CONSTITUTE UNPUBLISHED WORK OF KROH/BROESKE ARCHITECTS AND SHALL REMAIN PROPERTY OF KROH/BROESKE ARCHITECTS IN PERPETUITY. NO PART THEREOF SHALL BE REPRODUCED, COPIED, DISCLOSED, DISTRIBUTED/SOLD, PUBLISHED OR OTHERWISE USED IN ANYWAY WITHOUT THE ADVANCE EXPRESS WRITTEN CONSENT OF KROH/BROESKE ARCHITECTS. VISUAL CONTACT WITH THE ABOVE DRAWINGS OR ANY PART THEREOF, SHALL CONSTITUTE CONCLUSIVE EVIDENCE OF ACCEPTANCE OF THESE RESTRICTIONS.

SHEET TITLE •

PLUMBING PARTIAL ENLARGED FLOOR PLANS

DRAWN	•	W.P.
CHECKED	•	AEE
SCALE	•	1/4" = 1' - 0"
DATE	•	
JOB	•	
SHEET	•	

P-4

Wed Jun 28,11:30:34 2000

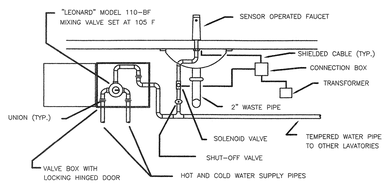

SENSOR OPERATED FAUCET DETAIL

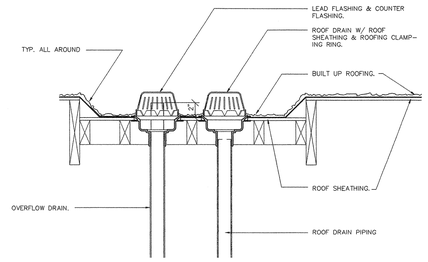

ROOF DRAIN AND OVERFLOW DRAIN

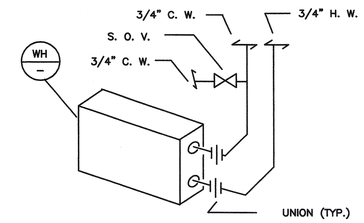

INSTANT WATER HEATER DETAIL

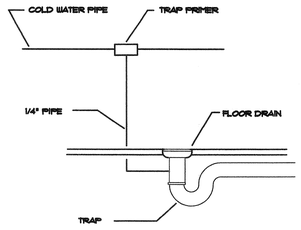

TRAP PRIMER FOR FLOOR DRAIN

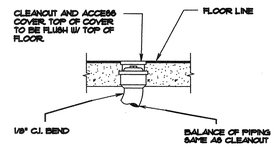

FLOOR CLEANOUT

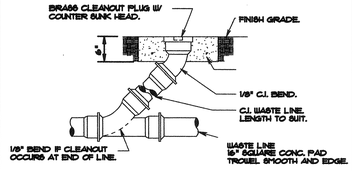

CLEANOUT TO GRADE

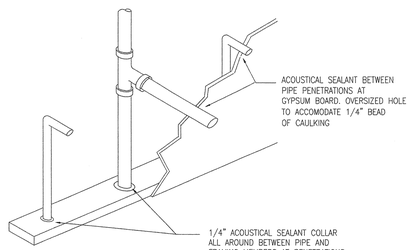

ACOUSTIC ISOLATOR FOR PIPING

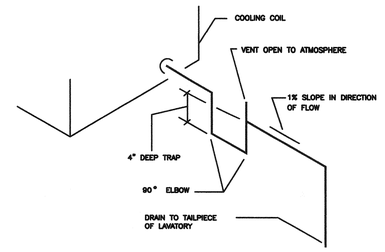

CONDENSATE DRAIN DETAIL

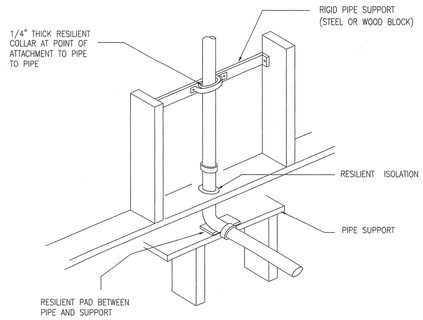

ACOUSTIC ISOLATOR FOR PIPING

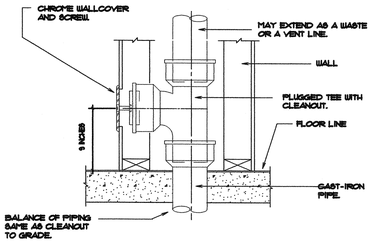

WALL CLEANOUT DETAIL

KROH/BROESKE
ARCHITECTS
6180 BROCKTON AVE.
RIVERSIDE, CA 92506
TEL 909 788-5940
FAX 909 275-0149

Park and Recreation Offices, White Park
3936 CHESTNUT ST.
RIVERSIDE, CALIFORNIA

CONSULTANTS •

NO. DATE REVISION

LICENSED ARCHITECT
JAMES L. BROESKE
No. C009174
Ren 11-30-01
STATE OF CALIFORNIA

THIS DRAWING AND THE DESIGNS, ARRANGEMENTS, DEPICTIONS, IDEAS AND PLANS EMBODIED THEREIN OR WHICH CONSTITUTE UNPUBLISHED WORK OF KROH/BROESKE ARCHITECTS SHALL REMAIN PROPERTY OF KROH/BROESKE ARCHITECTS IN PERPETUITY. NO PART THEREOF SHALL BE REPRODUCED, COPIED, DISCLOSED, DISTRIBUTED, OR USED IN ANY WAY WITHOUT THE ADVANCE EXPRESS WRITTEN CONSENT OF KROH/BROESKE ARCHITECTS. VISUAL CONTACT WITH THE ABOVE DRAWINGS OR ANY PART THEREOF, SHALL CONSTITUTE CONCLUSIVE EVIDENCE OF ACCEPTANCE OF THESE RESTRICTIONS.

SHEET TITLE •

PLUMBING DETAILS

DRAWN •
CHECKED •
SCALE •
DATE •
JOB •
SHEET •

P-5

CERTIFICATE OF COMPLIANCE – Lighting   Part 1 of 2   LTG-1

PROJECT NAME: Park and Recreation Offices, White Park	DATE: Feb. 15,2000
PROJECT ADDRESS: 3936 Chestnut St., Riverside, California	Building Permit #
PRINCIPAL DESIGNER – LIGHTING: Kroh/Broeske Architects	TELEPHONE: 909-788-5940
DOCUMENTATION AUTHOR: Consolidated Engineering	TELEPHONE: 714-832-6346
	Checked by / Date, Enforcement Agency Use

GENERAL INFORMATION

DATE OF PLANS: 2-15-2000	BUILDING CONDITIONED FLOOR AREA: 11,200 Sq. Ft.
BUILDING TYPE	☑ NONRESIDENTIAL ☐ HIGH RISE RESIDENTIAL ☐ HOTEL/MOTEL GUEST ROOM
PHASE OF CONSTRUCTION	☑ NEW CONSTRUCTION ☐ ADDITION ☐ ALTERATION ☐ UNCONDITIONED (File Affidavit)
METHOD OF LIGHTING COMPLIANCE	☑ COMPLETE BUILDING ☐ AREA CATEGORY ☐ TAILORED ☐ PERFORMANCE

STATEMENT OF COMPLIANCE

This Certificate of Compliance lists the building features and performance specifications needed to comply with Title 24, Parts 1 and 6 of the California Code of Regulations. This certificate applies only to building lighting requirements.

The documentation preparer hereby certifies that the documentation is accurate and complete.

DOCUMENTATION AUTHOR	SIGNATURE	DATE
David I. Lo, P.E.		2-15-2000

The Principal Lighting Designer hereby certifies that the proposed building design represented in this set of construction documents is consistent with other compliance forms and worksheets, with the specifications, and with any other calculations submitted with this permit application. The proposed building has been designed to meet the lighting requirements contained in sections 110, 119, 130 through 132, and 146 or 149.

Please check one :

☑ I hereby affirm that I am eligible under the provisions of Division 3 of the Business and Professions Code to sign this document as the person responsible for its preparation; and that I am a civil engineer, electrical engineer or architect.

☐ I affirm that I am eligible under the exemption to Division 3 of the Business and Professions Code by Section 5537.2 of the Business and Professions Code to sign this document as the person responsible for its preparation; and that I am a licensed contractor preparing document for work that I have contracted to perform.

☐ I affirm that I am eligible under the exemption to Division 3 of the Business and Professions Code by Section ______ of the ______________ Code to sign this document as the person responsible for its preparation; and for the following reason : ______________

PRINCIPAL LIGHTING DESIGNER – NAME	SIGNATURE	LIC. NO.	DATE
David I. Lo, P.E.		E-8625	2-15-2000

LIGHTING MANDATORY MEASSURES

Indicate location on plans of Note Block for Mandatory Measures: E-1

INSTRUCTIONS TO APPLICANT

For detailed instructions on the use of this and all Energy Efficiency Standards compliance forms, please refer to the Nonresidential Manual published by the California Energy Commission.

LTG-1 : Required on plans for all submittals. Part 2 may be incorporated in schedules on plans.
LTG-2 : Required for all submittals.
LTG-3 : Optional. Use only if lighting control credits are taken.
LTG-4 : Optional. Use only if Tailored Method is used. Parts 2 and 3 used only if applicable.

Nonresidential Compliance Form

CERTIFICATE OF COMPLIANCE– Lighting   Part 2 of 2   LTG-1

PROJECT NAME: Park and Recreation Offices, White Park   DATE: Feb. 15,2000

INSTALLED LIGHTING SCHEDULE

LUMINAIRE NAME	LAMPS TYPE (I / F / H)	NO. OF LAMPS	WATTS/LAMP	BALLASTS TYPE (S / E / O)	NO./LUMINAIRE	NOTE TO FIELD
A/AX	☐ ☑ ☐	3	32W	☐ ☑ ☐	1	
B /BX	☐ ☑ ☐	2	32W	☐ ☑ ☐	1	
C	☐ ☑ ☐	2	32W	☐ ☑ ☐	1	
D	☐ ☑ ☐	2	32W	☐ ☑ ☐	1	
	☐ ☐ ☐			☐ ☑ ☐		
	☐ ☐ ☐			☐ ☑ ☐		

MANDATORY AUTOMATIC CONTROLS

CONTROL LOCATION	CONTROL IDENTIFICATION	CONTROL TYPE	SPACE CONTROLLED	NOTE TO FIELD
Elect. Closet	LCP	Program. Time Switch	Open offices, halls	
Room	S OS	Occupancy Sensors	Offices, Restrms., Stor.	

CONTROLS FOR CREDIT

CONTROL LOCATION	CONTROL IDENTIFICATION	CONTROL TYPE	LUMINAIRES CONTROLLED TYPE	# OF LUMIN.	NOTE TO FIELD

NOTES TO FIELD–For Building Department Use Only

Nonresidential Compliance Form

LIGHTING COMPLIANCE SUMMARY   LTG-2

PROJECT NAME: Park and Recreation Offices, White Park   DATE: Dec. 20, 1999

ACTUAL LIGHTING POWER

LUMINAIRE NAME	DESCRIPTION	NUMBER OF LUMINAIRES	WATTS PER LUMINAIRE (Including Ballast)	CEC DEFAULT (S / N)	TOTAL WATTS
A/AX	2x4 Fluor. grid troffer	115	96	☒ ☐	11,040
B/BX	2x4 Fluor. grid Troffer	9	64	☒ ☐	576
C	4-Ft Fluorescent Wraparound	16	64	☒ ☐	1,024
D	8-Ft Strip Fluorescent	12	64	☒ ☐	768

SUBTOTAL FROM THIS PAGE: 13,408
PLUS SUBTOTAL FROM CONTINUATION PAGE: -
LESS CONTROL CREDIT WATTS (FROM LTG-3): -
ADJUSTED ACTUAL WATTS: 13,408

ALLOWED LIGHTING POWER (Choose One Method)

COMPLETE BUILDING METHOD

BUILDING CATEGORY	WATTS PER SF	COMPLETE BLDG. AREA	ALLOWED WATTS
Office Building	1.2	11,200	13,440

AREA CATEGORY METHOD

AREA CATEGORY	WATTS PER SF	AREA (SF)	ALLOWED WATTS
TOTALS		10,800 AREA	12,960 WATTS

COMPLETE BUILDING METHOD: ☐ TAILORED ☐ PERFORMANCE   TOTAL ALLOWED WATTS

Nonresidential Compliance Form

LIGHTING FIXTURE SCHEDULE

TYPE	FIXTURE INCAND.	FIXTURE FLUOR.	FIXTURE H.I.D.		VOLTS	LAMPS NO.	LAMPS WATTS AND TYPE	MOUNTING REC.	MOUNTING CLG.	MOUNTING PEND.	MOUNTING WALL	DESCRIPTION & VARIATIONS	MANUFACTURER & CATALOG NUMBER
A 96		•			120	3	32W F32T8 41K	•				2' X 4' RECESSED TROFFER WITH PRISMATIC LENS	METALUX #2GC-332-120V-EB81
AX 96		•			120	3	32W F32T8 41K	•				SAME AS TYPE "A" EXCEPT W/EMERGENCY BATTERY UNIT	METALUX #2GC-332-120V-EL-I80-EB81 (1100 LUMENS BATT.)
B 64		•			120	2	32W F32T8 41K	•				2' X 4' RECESSED TROFFER WITH PRISMATIC LENS	METALUX #2GC-232-120V-EB81
BX 64		•			120	2	32W F32T8 41K	•				SAME AS TYPE "B" EXCEPT W/EMERGENCY BATTERY UNIT	METALUX #2GC-232-120V-EL-I80-EB81 (1100 LUMENS BATT.)
C 64		•			120	2	32W F32T8 41K		•			4 FT. WRAPAROUND FLUORESCENT WITH ACRYLIC DIFFUSER	METALUX #WS-232A-120-EB81
D 64		•			120	2	32W F32T8 41K		•			8 FT. STRIP FLUORESCENT	METALUX #8TSTN-132-120-EB1
E 64		•			120	2	32W PL-T 41K	•				12" COMPACT FLUOR. DOWNLIGHT WITH PRISMATIC LENS	KIRLIN #RR91245-17
F 32		•			120	1	26W QUAD TT 41K				•	COMPACT FLUORESCENT WALL BRACKET FIXTURE WEATHERPROOF	ADVENT #AE7005-2CF26Q FIN. BY ARCH.
G 85		•			120	1	70W MH					LIGHT PEDESTAL BOLLARD W/CAST GRILL AND OPAL ACRYLIC LENS	ARCH. AREA LTG. #TPS-DC-70MH-FIN. BY ARCH.
H 20					120	1	LED		•		•	EXIT LIGHT, LED TYPE WITH EMERGENCY BATTERY UNIT	SURE-LITES #CAX70GWH
J 85					120	1	70W MH				•	12" SQUARE WALL MTD. VANDAL-RESISTANT TYPE HID LUMINAIRE	FAIL-SAFE #MHHW-PP-70H-120-LL-VRSB
K 85					120	1	70W MH				•	12" SQUARE WALL MTD. VANDAL-RESISTANT TYPE HID LUMINAIRE WITH PHOTOCELL KIT	FAIL-SAFE #MHGW-HE-70H-120-LL-VRSB-PB
L 64		•			120	2	32W F32T8 41K				•	4 FT. WRAPAROUND FLUORESCENT WALL BRACKET FIXTURE	METALUX #BC-232-120-EB81

LIGHTING FIXTURE NOTES

1. THIS CONTRACTOR SHALL VERIFY THE TYPE OF CEILING BEFORE ORDERING ANY NEW FIXTURES. HE IS FULLY RESPONSIBLE TO PROVIDE ALL MOUNTING BRACKETS TO FIT THE CEILING CONDITIONS AT NO EXTRA CHARGE TO THE OWNER.
2. REFER TO ARCHITECTURAL REFLECTED CEILING PLAN FOR EXACT LOCATION OF LIGHTING FIXTURES.
3. CONTRACTOR SHALL BE RESPONSIBLE FOR ORDERING PROPER TYPES OF TRIMS ALL RECESSED FLUORESCENT FIXTURES TO FIT THE CEILING BEING INSTALLED.
4. ALL NEW FLUORESCENT LAMPS SHALL BE ENERGY SAVING TYPE, COOL WHITE EQUAL TO G.E. – "WATTMISER 2", OR SYLVANIA – "SUPER SAVER" LAMPS.
5. ALL BALLASTS SHALL BE HIGH FREQUENCY ELECTRONIC TYPE SUITABLE FOR LAMPS SPECIFIED. 97% BALLAST FACTOR MINIMUM AND TRANSIENT HARMONIC DISTORTION OF LESS THAN 10 PERCENT.
6. ALL LUMINAIRES/BALLASTS SHALL BE CERTIFIED BY THE CALIFORNIA ENERGY COMMISSION.
7. FIXTURE TYPE IN CONTACT WITH INSULATION SHALL BE U.L. APPROVED FOR THERMAL BARRIER.
8. SUBMIT LIGHTING FIXTURE CUTS FOR OWNER/ARCHITECT OR ENGINEER'S APPROVAL.
9. ALL EXTERIOR LIGHTING FIXTURES SHALL HAVE THE APPROPRIATE DAMP OR WET LOCATION LABELS PER N.E.C. 410-4.
10. WHEN INTERMEDIATE CEILING SYSTEMS ARE USED, #12 GAUGE STEEL HANGERS SHALL BE INSTALLED TO THE GRID MEMBERS WITHIN 3 INCHES OF EACH CORNER OF EACH FIXTURE PER N.E.C. 410-16C.

ELECTRICAL GENERAL NOTES

1. ALL WORK SHALL BE IN FULL ACCORDANCE WITH ALL CODES, RULES AND REGULATIOINS OF GOVERNING AGENCIES AND SHALL COMPLY WITH THE REQUIREMENTS OF THE SERVING POWER AND TELEPHONE COMPANIES.
2. THE CONTRACTOR SHALL OBTAIN ALL PERMITS AND COMPLY WITH ALL INSPECTION REQUIREMENTS. THE CITY WILL PAY THE PERMIT FEES.
3. THE CONTRACTOR SHALL VERIFY AVAILABILITY OF SERVICES AND DETERMINE ACTUAL DETAILS PERTAINING TO EXACT LOCATIONS AND REQUIREMENTS BEFORE SUBMITTING HIS BID. UPON RECEIPT OF NOTICE THAT THE ELECTRICAL CONTRACT AWARD HAS BEEN MADE, SUCCESFUL BIDDER SHALL NOTIFY THE POWER AND TELEPHONE COMPANIES OF THE ESTIMATED DATE WHEN SERVICE SHALL BE DESIRED.
4. ALL MATERIALS SHALL BE NEW, UL LISTED AND APPROVED AS APPROPRIATE.
5. ELECTRICAL DRAWINGS ARE DIAGRAMMATIC. REFER TO ARCHITECTURAL, STRUCTURAL, MECHANICAL AND HVAC DRAWINGS FOR GUIDANCE ON DIMENSIONS, CEILING HEIGHTS, DOOR SWINGS, ROOM FINISHES, DETAILS, LOCATION OF DUCTS, PIPES AND STEEL. INSTALL THE ELECTRICAL SYSTEMS WITHOUT INTERFERING WITH DUCTS, PIPES, STRUCTURAL STEEL OR OTHER SYSTEMS.
6. REFER TO MECHANICAL DRAWINGS FOR EXACT EQUIPMENT AND CONTROL LOCATIONS AND FOR CONTROL SCHEMATICS. ALL LOCATIONS SHALL BE VERIFIED BEFORE ROUGH-IN.
7. ALL ELECTRICAL DEVICES, EQUIPMENT, CONDUITS, CONNECTORS ETC. LOCATED OUTSIDE OF BUILDING ENVELOPE SHALL BE WEATHERPROOFED.
8. ALL CONDUCTORS SHALL BE COPPER WITH TYPE THHN/THWN 600 VOLT INSULATION. MINIMUM SIZE OF WIRE SHALL BE NO. 12 AWG, UNLESS NOTED OTHERWISE.
9. CONDUITS INSTALLED IN DUCT BANKS, IN SLABS, IN EARTH OR FILL SHALL BE PVC SCHEDULE-40 OR GALVANIZED RIGID CONDUIT, INTERMEDIATE METAL CONDUIT ENCASED IN CONCRETE. TRANSITIONS FROM BELOW GRADE SHALL BE GALVANIZED RIGID OR INTERMEDIATE METAL CONDUIT. CONDUIT ABOVE GRADE MAY BE GALVANIZED RIGID CONDUIT OR INTERMEDIATE METAL CONDUIT INDOORS OR OUTDOORS. ELECTRICAL METALLIC TUBING MAY BE USED IN INDOOR DRY LOCATIONS. FLEXIBLE CONDUIT SHALL BE USED FOR FINAL CONNECTIONS TO MOTORS AND OTHER VIBRATTING EQUIPMENT. FLEXIBLE CONDUIT USED IN DAMP LOCATIONS AND OUTDOORS SHALL BE WEATHERPROOFED. FLEXIBLE CONDUIT SHALL NOT EXCEED 6 FEET.
10. INSTALL ALL EXPOSED CONDUITS IN THE BUILDING PARALLEL OR PERPENDICULAR TO THE LINES OF THE BUILDING. CONDUIT SHALL BE SUPPORTED ACCORDING TO CODE.
11. ALL MOTORS, A/C UNITS, COMPRESSORS AND METAL HOUSING SHALL BE GROUNDED WITH GREEN GROUND WIRES SIZED AND INSTALLED ACCORDING TO CODES. ALL FEEDERS RUN IN NON-METALLIC CONDUITS SHALL HAVE GROUND CONDUCTOR SIZED IN ACCORDANCE WITH APPLICABLE CODES. THE CONTRACTOR SHALL MAINTAIN UNIFORMITY AND CONTINUITY OF THE GROUNDING SYSTEM.
12. RECEPTACLES SHALL BE DUPLEX TYPE, 20 AMP, 125V, 3 WIRE, GROUNDING TYPE, NEMA CONFIGURATION 5-20R.
13. SWITCHES SHALL BE RATED 20 AMPS – 120/277 VOLTS UNLESS NOTED OTHERWISE.
14. PROVIDE WALL PLATES FOR FLUSH MOUNTED RECEPTACLES, SPECIFICATION GRADE, SATIN ALUMINUM, STANDARD SIZE. COVER PLATES FOR DEVICES IN TYPE FS AND FD BOXES FOR EXPOSED WORK, SHALL BE SHEET STEEL, SUITABLE FOR THE DEVICES INSTALLED. GANG TYPE COVERS SHALL BE USED WHERE MORE THAN ONE DEVICE IS MOUNTED IN A BOX.
15. ALL CIRCUIT BREAKERS USED TO SWITCH FLUORESCENT LIGHTING FIXTURES SHALL BE APPROVED FOR THE PURPOSE AND MARKED "SWD".
16. TELEPHONE AND DATA OUTLETS SHALL BE A 2" DEEP BOX WITH SINGLE GANG RING AND PLATE.
17. PANELBOARDS SHALL BE COMPLETELY FACTORY BUILT AND TESTED , TOTALLY ENCLOSED, DEAD FRONT CIRCUIT BREAKER TYPE. SPACES SHALL BE COMPLETE WITH BUS AND HARDWARE READY FOR INSTALLATION OF FUTURE BREAKERS. CIRCUIT BREAKERS SHALL BE BOLT-ON TYPE, THERMAL MAGNETIC TYPE WITH 10,000 MINIMUM A.I.C. CIRCUIT DIRECTORY FRAME WITH NEATLY TYPED DIRECTORY CARD WITHIN CLEAR PLASTIC COVERING ON INSIDE OF DOOR SHALL BE PROVIDED.
18. TEST THE COMPLETE SYSTEM TO DEMONSTRATE THAT THE ELECTRICAL COMPONENTS AND SYSTEMS ARE COMPLETE, INSTALLED AND FUNCTION PROPERLY. MAKE NECESSARY CORRECTIONS TO MALFUNCTION AND LEAVE SYSTEM READY FOR OPERATION.
19. ALL WORK SHALL BE GUARANTEED BY THE CONTRACTOR FOR A PERIOD OF ONE YEAR FROM THE DATE OF ACCEPTANCE OF THE WORK BY THE OWNER.
20. CONDUCTOR PENETRATION OF FIRE RATED PORTIONS OF A STRUCTURE SHALL BE EFFECTIVELY SEALED AND SLEEVED WITH STEEL FLEX 3 FEET EACH SIDE OF THE PENETRATION, OR OTHER APPLIED METHODS PER N.E.C. 300-21.
21. FIRE STOPPING (PENETRATION SEALING) IS REQUIRED FOR EACH PENETRATION THROUGH A FIRE RATED WALL. PER U.B.C.-709.6/N.E.C. 300.21.

LIGHTING MANDATORY MEASURES

☒ FLUORESCENT BALLAST AND LUMINAIRES CERTIFIED
All fluorescent fixtures specified for the project as certified and listed in the Directory. All installed fixtures shall be certified.

☒ INDIVIDUAL ROOM/AREA CONTROLS
Each room and area in this building is equipped with a separate switch or occupancy sensor devices for each area with floor-to-ceiling walls.

☒ UNIFORM REDUCTION FOR INDIVIDUAL ROOMS
All rooms and area greater than 100 square feet and more than 1.2 watts per square foot of lighting load shall be controlled with Bi-level switching for uniform reduction of lighting within the room.

☒ DAYLIT AREA CONTROL
All rooms with windows and skylights, that are greater than 250 square feet, and that allow for the effective use of daylight in the area shall have 50% of the lamps in each daylit area controlled by a separate switch; or
The effective use of daylight through cannot be accomplished because the windows are continuously shaded by a building on the adjacent lot. Diagram of shading during differeent times of the years is included on the plans.

ELECTRICAL SYMBOL LIST

- FLUORESCENT LIGHTING FIXTURE RECESSED IN CEILING
- FLUORESCENT LIGHTING FIXTURE WALL MOUNTED
- FLUORESCENT LIGHTING FIXTURE SURFACE OR PENDANT MOUNTED
- FLUORESCENT STRIP LIGHTING FIXTURE
- INCANDESCENT OR H.I.D. LIGHTING FIXTURE SURFACE MOUNTED
- INCANDESCENT OR H.I.D. LIGHTING FIXTURE RECESSED MOUNTED
- INCANDESCENT OR H.I.D. LIGHTING FIXTURE WALL MOUNTED
- EXIT SIGN LIGHTING FIXTURE, DIRECTIONAL ARROW AS SHOWN
- DUPLEX RECEPTACLE @ +15" OR AS NOTED. GROUNDING TYPE
- FLOOR MOUNTED DOUBLE DUPLEX RECEPTACLE, GROUNDING TYPE
- GFI TYPE DUPLEX RECEPTACLE MOUNTED AS SHOWN ON PLAN
- G: ANY RECEPTACLE WITH "G" SHALL BE ISOLATED GROUND TYPE
- SPECIAL PURPOSE RECEPTACLE AS INDICATED ON PLAN
- JUNCTION BOX, STANDARD OUTLET W/BLANK COVER PLATE, WALL MOUNTED
- JUNCTION BOX, CEILING MOUNTED
- EXHAUST FAN
- TELEPHONE OUTLET, FLUSH WALL MOUNTED AT 15" OR AS NOTED PROVIDE 3/4" C.O. TO ACCESSIBLE CEILING SPACE
- DATA OUTLET, FLUSH WALL MOUNTED AT 15" OR AS NOTED PROVIDE 3/4" C.O. TO ACCESSIBLE CEILING SPACE
- COMBINATION TELEPHONE/DATA OUTLET, FLUSH WALL MOUNTED AT 15" OR AS NOTED. PROVIDE 2-3/4" C.O. TO ACCESSIBLE CEILING SPACE
- FLOOR MOUNTED TELEPHONE/DATA OUTLET
- T: THERMOSTAT OUTLET, FLUSH MOUNTED AT 5'-0" OR AS NOTED
- $: TOGGLE SWITCH, SINGLE POLE, FLUSH MOUNTED @ 4'-0" OR AS NOTED
- $3: THREE-WAY TOGGLE SWITCH, FLUSH MOUNTED @ 4'-0" OR AS NOTED
- $LV: MOMENTARY CONTACT LOW VOLTAGE SWITCH, FLUSH MOUNTED @ 4'-0" OR AS NOTED
- $K: KEYED SWITCH, SINGLE POLE, FLUSH MOUNTED @ 4'-0" OR AS NOTED
- $M: MANUAL MOTOR STARTER SWITCH WITH THERMAL OVERLOAD PROTECTION, 1 OR 2 POLE AS REQUIRED, MOUNTED @ 4'-0" OR AS NOTED
- F: DISCONNECT SWITCH, HORSEPOWER RATED. "F" DENOTES FUSED TYPE
- LIGHTING OR RECEPTACLE PANELBOARD @ +6'-6" TO TOP
- A/115: FIXTURE DESIGNATION, "A" = FIXTURE TYPE, 115 = TOTAL WATTS
- CONDUIT RUN CONCEALED ABOVE CEILING OR IN WALL
- CONDUIT RUN CONCEALED IN OR BELOW FLOOR OR GRADE
- FLEXIBLE CONDUIT
- HOMERUN TO PANEL "P" CIRCUITS #1 & #3 WITH WIRES AS NOTED
- T/D: TELEPHONE/DATA CONDUIT, 2-3/4" C.O. RUN FROM OUTLET TO CEILING SPACE OR AS NOTED ON DRAWINGS
- T1/D1: TELEPHONE/DATA CONDUIT, 2-1" C.O. RUN FROM OUTLET TO CEILING SPACE OR AS NOTED ON DRAWINGS
- TELEPHONE/DATA TERMINAL BACKBOARD
- 2: PLAN NOTE #2
- S: WALL MOUNTED OCCUPANCY SENSOR, SINGLE CIRCUIT, MOUNT AT +48 INCHES WATT STOPPER #WS-120/277 OR EQUAL
- S a,b: WALL MOUNTED OCCUPANCY SENSOR, TWO CIRCUITS, MOUNT AT +48 INCHES WATT STOPPER #WS-120/277-2 CIRCUITS OR EQUAL
- OS: CEILING MOUNTED OCCUPANCY SENSOR COMPLETE WITH RELAYS, POWER PACKS AND CONNECTIONS, WATT STOPPER #DT-205-B-120-E-P OR EQUAL
- WP: INDICATES WEATHERPROOF

ELECTRICAL WIRING LEGEND

1/2"C – 2#12	1/2"C – 3#12	3/4"C – 4#12
3/4"C – 5#12	1"C – 6#12	1"C – 7#12
#10: 1/2"C – 2#10	#10: 3/4"C – 3#10	#10: 3/4"C – 4#10
#10: 1"C – 5#10	#8: 3/4"C – 2#8	#8: 1"C – 3#8

ISOLATED GROUND WIRE. RUN IN ADDITION TO REGULAR GROUND WIRE.

NOTE:

IN ADDITION TO PHASE AND NEUTRAL WIRES SHOWN ABOVE, ONE GROUND WIRE SHALL BE ADDED IN EACH CONDUIT RUN. GROUND WIRE SHALL BE SIZED PER N.E.C. TABLE 250-95, BUT NOT SMALLER THAN #12.

KROH/BROESKE
ARCHITECTS

6180 BROCKTON AVE.
RIVERSIDE, CA 92506
TEL 909 788-5940
FAX 909 275-0149

Park and Recreation Offices, White Park
3936 CHESTNUT ST.
RIVERSIDE, CALIFORNIA

CONSULTANTS •

Consolidated Engineering
CONSULTING ELECTRICAL ENGINEERS
14661 MYFORD ROAD, SUITE C
TUSTIN, CALIFORNIA 92780
TEL (714) 832-6346   FAX (714) 832-0437

NO. DATE REVISION

LICENSED ARCHITECT
JAMES L. BROESKE
No. C009174
Ren 11-30-01
STATE OF CALIFORNIA

THIS DRAWING AND THE DESIGNS, ARRANGEMENTS, DEPICTIONS, IDEAS AND OTHER INFORMATION CONTAINED HEREIN CONSTITUTE UNPUBLISHED WORK OF KROH/BROESKE ARCHITECTS AND SHALL REMAIN PROPERTY OF KROH/BROESKE ARCHITECTS IN PERPETUITY. NO PART THEREOF SHALL BE REPRODUCED, COPIED, DISCLOSED, DISTRIBUTED,SOLD, PUBLISHED OR OTHERWISE USED IN ANYWAY WITHOUT THE ADVANCE EXPRESS WRITTEN CONSENT OF KROH/BROESKE ARCHITECTS. VISUAL CONTACT WITH THE ABOVE DRAWINGS, OR ANY PART THEREOF, SHALL CONSTITUTE CONCLUSIVE EVIDENCE OF ACCEPTANCE OF THESE RESTRICTIONS.

SHEET TITLE •

SYMBOL LIST
GEN. NOTES
FIXTURE SCHEDULE
TITLE 24
CALCULATIONS

DRAWN •
CHECKED •
SCALE •
DATE •
JOB •
SHEET •

E-1

PANEL "C"

MAIN L.O. BUSS 225A CU. — SERVICE 208/120V, 3ø, 4W — MOUNTING SURFACE — A.I.C. 42,000

DESCRIPTION	A	B	C	LTG	REC	MIC	BKR POLE	BKR AMP	CKT NO.	CKT NO.	BKR POLE	BKR AMP	LTG	REC	MIC	A	B	C	DESCRIPTION
RECEPTACLES	900				5		1	20	1	2	1	20		5		900			RECEPTACLES
RECEPTACLES		720			4		1	20	3	4	1	20		5			900		RECEPTACLES
RECEPTACLES			900		5		1	20	5	6	1	20		5				900	RECEPTACLES
RECEPTACLES	720				4		1	20	7	8	1	20		1		500			BREAK RM.
RECEPTACLES		720			4		1	20	9	10	1	20		1			1000		BREAK RM.
STOR. 132			500		1		1	20	11	12	1	20		1				1000	BREAK RM.
STOR. 132	500				1		1	20	13	14	1	20		1		1000			CONF. RM.
STOR. 132		500			1		1	20	15	16	1	20		1			180		ELECT. CLOSET
SENSOR			100			1	1	20	17	18	1	20		2				360	OUTDOOR
SPARE	–						1	20	19	20	1	20				–			SPARE
SPARE		–					1	20	21	22	1	20					–		SPARE
SPARE			–				1	20	23	24	1	20						–	SPARE
SPARE	–						1	20	25	26	1	20				–			SPARE
SPARE		–					1	20	27	28	1	20					–		SPARE
SPARE			–				1	20	29	30	1	20						–	SPARE
SPACE	–								31	32						–			SPACE
SPACE		–							33	34							–		SPACE
SPACE			–						35	36								–	SPACE
(E)LOADCENTER	3049							60	37	38						–			SPACE
-----		2000					2		39	40		30		1			2300		WH-1
SPACE			–						41	42	1							2300	----
TOTALS:																			

5,049 WATTS (L.C.L.) X 1.25 = 6,311 WATTS
OTHER LOAD = 16,900 WATTS
TOTAL = 23,211 WATTS — TOTAL AMPS 64

PANEL "D"

MAIN L.O. BUSS 225A CU. — SERVICE 208/120V, 3ø, 4W — MOUNTING FLUSH — A.I.C. 42,000

DESCRIPTION	A	B	C	LTG	REC	MIC	BKR POLE	BKR AMP	CKT NO.	CKT NO.	BKR POLE	BKR AMP	LTG	REC	MIC	A	B	C	DESCRIPTION
MEETING, JAN.	720				4		1	20	1	2	1	20		4		720			MEETING, OFF.
MEETING, STOR.		720			4		1	20	3	4	1	20		3			540		MEETING, OFF.
MEETING,MEN,WOM			900		5		1	20	5	6	1	20		1				180	OUTDOOR
MEETING RM. 126	960				2		1	20	7	8	1	20		2		960			RECEPT. 138
MEETING RM. 126		960			2		1	20	9	10	1	20		2			960		OFFICE 123
SPARE			–				1	20	11	12	1	20		3				1440	OFFICES 122,123
OUTDOOR	180				1		1	20	13	14	1	20		2		960			PHONE/DATA 116
OUTDOOR		180			1		1	20	15	16	1	20		2			960		PHONE/DATA 116
DF-1			1000			1	1	20	17	18	1	20		2				960	PHONE/DATA 116
ROOF	360				2		1	20	19	20	1	20				–			SPARE
OUTDOOR		180				1	1	20	21	22	1	20					–		SPARE
SENSORS			100			2	1	20	23	24	1	20						–	SPARE
ZONE DAMPERS	200					4	1	20	25	26	1	20				–			SPARE
ZONE DAMPERS		150				3	1	20	27	28	1	20					–		SPARE
SPARE			–				1	20	29	30	1	20						–	SPARE
SPARE	–						1	20	31	32	1	20				–			SPARE
SPARE		–					1	20	33	34	1	20					–		SPARE
SPARE			–				1	20	35	36	1	20						–	SPARE
SPARE	–						1	20	37	38	1	20				–			SPARE
SPARE		–					1	20	39	40	1	20					–		SPARE
SPARE			–				1	20	41	42	1	20						–	SPARE
TOTALS:																			

– WATTS (L.C.L.) X 1.25 = – WATTS
OTHER LOAD = 13,990 WATTS
TOTAL = 13,990 WATTS — TOTAL AMPS 39

NOTE: PROVIDE PANEL "D" WITH ISOLATED COPPER GROUND BUS IN ADDITION TO THE REGULAR GROUND BUS.

PANEL "E"

MAIN L.O. BUSS 400A CU. — SERVICE 208/120V, 3ø, 4W — MOUNTING FLUSH — A.I.C. 42,000

DESCRIPTION	A	B	C	LTG	REC	MIC	BKR POLE	BKR AMP	CKT NO.	CKT NO.	BKR POLE	BKR AMP	LTG	REC	MIC	A	B	C	DESCRIPTION
AC-5	1910					1		30	1	2		30			1	1910			AC-6
----		1910							3	4							1910		----
----			1910				3		5	6	3							1910	----
AC-1A	2294					1		30	7	8		40			1	2954			AC-3
----		2294							9	10							2954		----
----			2294				3		11	12	3							2954	----
AC-1	4047					1		50	13	14		50			1	4047			AC-4
----		4047							15	16							4047		----
----			4047				3		17	18	3							4047	----
AC-2	4047					1		50	19	20	1	20			1	1300			WH-3
----		4047							21	22	1	–					–		SPACE
----			4047				3		23	24	1	–						–	SPACE
ROOF RECEPTACLE	1000				1			20	25	26	1	–				–			SPACE
----		1000					3		27	28		60			1		4500		WH-2
SPACE			–						29	30	2							4500	----
SPACE	–								31	32						–			SPACE
SPACE		–							33	34							–		SPACE
SPACE			–						35	36								–	SPACE
SPACE	–								37	38						–			SPACE
SPACE		–							39	40							–		SPACE
SPACE			–						41	42								–	SPACE
TOTALS:																			

12,141 WATTS X 1.25 (LARGEST MOTOR) = 15,176 WATTS
OTHER LOAD = 63,786 WATTS
TOTAL = 78,962 WATTS — TOTAL AMPS 219

PANEL "B"

MAIN L.O. BUSS 225A CU. — SERVICE 208/120V, 3ø, 4W — MOUNTING SURFACE — A.I.C. 42,000

DESCRIPTION	A	B	C	LTG	REC	MIC	BKR POLE	BKR AMP	CKT NO.	CKT NO.	BKR POLE	BKR AMP	LTG	REC	MIC	A	B	C	DESCRIPTION
* OPEN OFFICES	960						1	20	1	2	1	20				960			SEC/RECEPT 102 *
* OPEN OFFICES		960					1	20	3	4	1	20					960		SEC/RECEPT 102 *
* OPEN OFFICES			960				1	20	5	6	1	20						960	SEC/RECEPT 102 *
OPEN OFFICES	1440				3		1	20	7	8	1	20				960			SEC/RECEPT 102 *
OPEN OFFICES		1440			3		1	20	9	10	1	20					960		SEC/RECEPT 102 *
OPEN OFFICES			960		2		1	20	11	12	1	20						960	SEC/RECEPT 102 *
HALL	480				1		1	20	13	14	1	20				960			OPEN OFF. 109 *
CONF.,OFFICE		1440			3		1	20	15	16	1	20					960		OPEN OFF. 109 *
OFFICE 120			1440		3		1	20	17	18	1	20						960	OPEN OFF. 109 *
OFFICE 133	960				2		1	20	19	20	1	20		1		1000			COPIER
OFFICE 134		960			2		1	20	21	22	1	20		2			960		RECEPT., CONF.
OFFICE 135			960		2		1	20	23	24	1	20		2				960	CONF. 108
* RECEPTION 128	960						1	20	25	26	1	20				960			OPEN OFF. 113 *
* RECEPTION 128		960					1	20	27	28	1	20					960		OPEN OFF. 113 *
* RECEPTION 128			960				1	20	29	30	1	20						960	OPEN OFF. 113 *
OPEN OFF. 109	1440				3		1	20	31	32	1	20				–			SPARE
OPEN OFF. 109		1440			3		1	20	33	34	1	20					–		SPARE
OPEN OFF. 109			960		2		1	20	35	36	1	20						–	SPARE
SPARE	–						1	20	37	38	1	20				–			SPARE
SPARE		–					1	20	39	40	1	20					–		SPARE
SPARE			–				1	20	41	42	1	20						–	SPARE
TOTALS:																			

– WATTS (L.C.L.) X 1.25 = – WATTS
OTHER LOAD = 34,120 WATTS
TOTAL = 34,120 WATTS — TOTAL AMPS 95

NOTE: PROVIDE PANEL "B" WITH ISOLATED COPPER GROUND BUS IN ADDITION TO THE REGULAR GROUND BUS.

* CIRCUIT FOR SYSTEM FURNITURE RECEPTACLES.

PANEL EXISTING LOAD CENTER (MAINT. BLDG.)

MAIN L.O. BUSS 60A — SERVICE 208/120V, 1ø, 3W — MOUNTING SURFACE — A.I.C. 10,000

DESCRIPTION	A	B	LTG	REC	MIC	BKR POLE	BKR AMP	CKT NO.	CKT NO.	BKR POLE	BKR AMP	LTG	REC	MIC	A	B	DESCRIPTION
(E) RECEPTACLES	1000					1	20	1	2	1	20				1000		(E) RECEPTACLES
(E) RECEPTACLES		1000				1	20	3	4	1	20					1000	(E) RECEPTACLES
(E) LIGHTS	664					1	20	5	6	1	20				385		(E) LIGHTS
SPACE		–				1	–	7	8	1	–					–	SPACE
TOTALS:																	

1,049 WATTS (L.C.L.) X 1.25 = 1,311 WATTS
OTHER LOAD = 4,000 WATTS
TOTAL = 5,311 WATTS — TOTAL AMPS 25.5

PANEL "A"

MAIN L.O. BUSS 225A CU. — SERVICE 208/120V, 3ø, 4W — MOUNTING SURFACE — A.I.C. 42,000

DESCRIPTION	A	B	C	LTG	REC	MIC	BKR POLE	BKR AMP	CKT NO.	CKT NO.	BKR POLE	BKR AMP	LTG	REC	MIC	A	B	C	DESCRIPTION
STO.,CONF.,BREAK	960			10			1	20	1	2	1	20	5			480			OPEN OFFICES
OFF.,MEN,WOM.		1356		15		1	1	20	3	4	1	20	4				384		OPEN OFFICES
OFF.,MEET.,VEST.			1056	11			1	20	5	6	1	20	8					768	OPEN OFFICES
OPEN OFFICES	768			8			1	20	7	8	1	20	8			768			OPEN OFFICES
OFF.,CONF.		1056		11			1	20	9	10	1	20	5				480		MEETING RM.
OFFICES			768	8			1	20	11	12	1	20	5					480	MEETING RM.
OFFICES, STO.	640			7			1	20	13	14	1	20	11			864			RECEP.,HALL,STO.
EXTERIOR LTS.		384		10			1	20	15	16	1	20			1		500		"LCP"
EXTERIOR LTS.			352	7			1	20	17	18	1	20	2		1			471	RESTRM. LTS., EF
LIGHT BOLLARDS	680			8			1	20	19	20	1	20	6			384			ELEC, STO, FILES
COVE LIGHTS		512		8			1	20	21	22	1	20	12				1008		EMERG./NIGHTLTS.
COVE LIGHTS			256	4			1	20	23	24	1	20	17					1004	EMERG./NIGHTLTS.
CHRISTMAS LTS.	720				4		1	20	25	26	1	20	4			128			GAZEBO LIGHTS
CHRISTMAS LTS.		540			3		1	20	27	28	1	20		2			1000		GAZEBO RECEPT.
CHRISTMAS LTS.			360		2		1	20	29	30	1	20		2				1000	GAZEBO RECEPT.
CHRISTMAS LTS.	360				2		1	20	31	32	1	20				–			SPARE
CHRISTMAS LTS.		720			4		1	20	33	34	1	20					–		SPARE
SPARE			–				1	20	35	36	1	20						–	SPARE
SPARE	–						1	20	37	38	1	20				–			SPARE
SPARE		–					1	20	39	40	1	20					–		SPARE
SPARE			–				1	20	41	42	1	20						–	SPARE
TOTALS:																			

21,207 WATTS (L.C.L.) X 1.25 = 26,509 WATTS
OTHER LOAD = – WATTS
TOTAL = 26,509 WATTS — TOTAL AMPS 74

SINGLE LINE DIAGRAM NOTES

1. THE MAXIMUM AVAILABLE FAULT CURRENT PER POWER COMPANY IS: 42,000 AMPS.
2. ALL BUSSING IN SWITCHBOARD SHALL BE BRACED FOR A MINIMUM OF 65,000 A.I.C.
3. ALL CIRCUIT BREAKERS IN PANELBOARD SHALL BE RATED 10,000 A.I.C. UNLESS NOTED OTHERWISE.
4. ALL DISTRIBUTION CIRCUIT BREAKERS SHALL BE SERIES RATED WITH THE PANELBOARD CIRCUIT BREAKERS. SHOP DRAWING SUBMITTALS SHALL INCLUDE SERIES RATING OF CIRCUIT BREAKERS. PROVIDE MARKING AT EACH SERIES RATED DEVICE READING "CAUTION–SERIES RATED SYSTEM".
5. PROVIDE AND INSTALL 20 FOOT OF 1 #3/0 B.C. TO UFER GROUND. 2" MINIMUM CONCRETE ENCASEMENT AT BOTTOM OF BUILDING FOOTING.
6. PROVIDE AND INSTALL 1"C – 1 #3/0 THWN, CU TO BUILDING COLD METALLIC WATER PIPING SYSTEM.
7. PROVIDE AND INSTALL 3/4"C – 1 #6 THWN CU TO MAIN TELEPHONE BACKBOARD.
8. CONTINUOUS COPPER GROUND BUS.
9. PROVIDE AND INSTALL 1"C – 1 #3/0 THWN, CU TO BUILDING GAS MAIN LINE. CONNECT TO GAS LINE ON SECONDARY SIDE OF METER AT SERVICE ENTRY.
10. PROVIDE AND INSTALL 1/2"C – 1 #8 THWN, CU TO METALLIC COLD WATER PIPE.

SINGLE LINE DIAGRAM
NOT TO SCALE

LOAD SUMMARY

PANEL "A"	26.5 KVA
PANEL "B"	34.1 KVA
PANEL "C"	23.2 KVA
PANEL "D"	14.0 KVA
PANEL "E"	79.0 KVA
	176.8 KVA

491 AMPS. @ 208/120V, 3ø, 4W

KROH/BROESKE
ARCHITECTS
6180 BROCKTON AVE.
RIVERSIDE, CA 92506
TEL 909 788-5940
FAX 909 275-0149

Park and Recreation Offices, White Park
3936 CHESTNUT ST.
RIVERSIDE, CALIFORNIA

CONSULTANTS •
Consolidated Engineering

NO.	DATE	REVISION
1	5-5-00	PLAN CHECK

LICENSED ARCHITECT — JAMES L. BROESKE — No. C009174 — Ren 11-30-01 — STATE OF CALIFORNIA

THIS DRAWING AND THE DESIGNS, ARRANGEMENTS, DEPICTIONS, IDEAS AND OTHER INFORMATION CONTAINED HEREIN CONSTITUTE UNPUBLISHED WORK OF KROH/BROESKE ARCHITECTS AND SHALL REMAIN PROPERTY OF KROH/BROESKE ARCHITECTS IN PERPETUITY. NO PART THEREOF SHALL BE REPRODUCED, COPIED, DISCLOSED, DISTRIBUTED, SOLD, PUBLISHED OR OTHERWISE USED IN ANYWAY WITHOUT THE ADVANCE EXPRESS WRITTEN CONSENT OF KROH/BROESKE ARCHITECTS. VISUAL CONTACT WITH THE ABOVE DRAWINGS, OR ANY PART THEREOF, SHALL CONSTITUTE CONCLUSIVE EVIDENCE OF ACCEPTANCE OF THESE RESTRICTIONS.

SHEET TITLE •
SINGLE LINE DIAGRAM

DRAWN •
CHECKED •
SCALE •
DATE •
JOB •
SHEET •

E-2

Thu Jul 20 12:00:45 2000

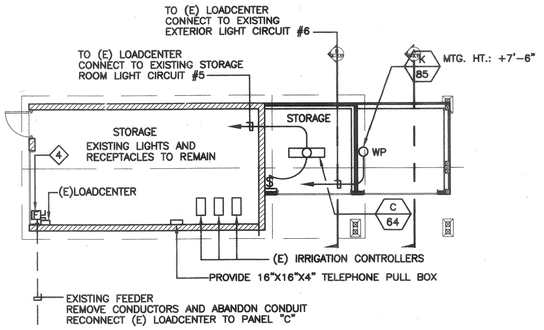

MAINTENANCE BUILDING ELECTRICAL PLAN

SCALE: 1/8" = 1'-0"

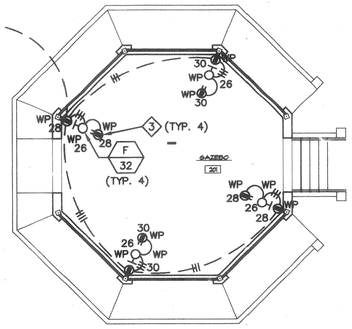

GAZEBO ELECTRICAL PLAN

SCALE: 1/8" = 1'-0"

PLAN NOTES:

1. 13" X 24" X DEPTH AS REQUIRED UNDERGROUND PRECAST CONCRETE PULL BOX WITH BOLTED DOWN TRAFFIC TYPE STEEL COVER MARKED "ELECTRIC". BROOKS #38PBC SERIES OR APPROVED EQUAL. SET PULL BOX ON 6" COMPACTED ROCK.
2. 13" X 24" X DEPTH AS REQUIRED UNDERGROUND PRECAST CONCRETE PULL BOX WITH BOLTED DOWN TRAFFIC TYPE STEEL COVER MARKED "TELEPHONE". BROOKS #38PBC SERIES OR APPROVED EQUAL. SET PULL BOX ON 6" COMPACTED ROCK.
3. MOUNT RECEPTACLE BELOW ROOF FOR CHRISTMAS LIGHTS.
4. PROVIDE A 60AS/60AF/2PSN FUSED DISCONNECT SWITCH.

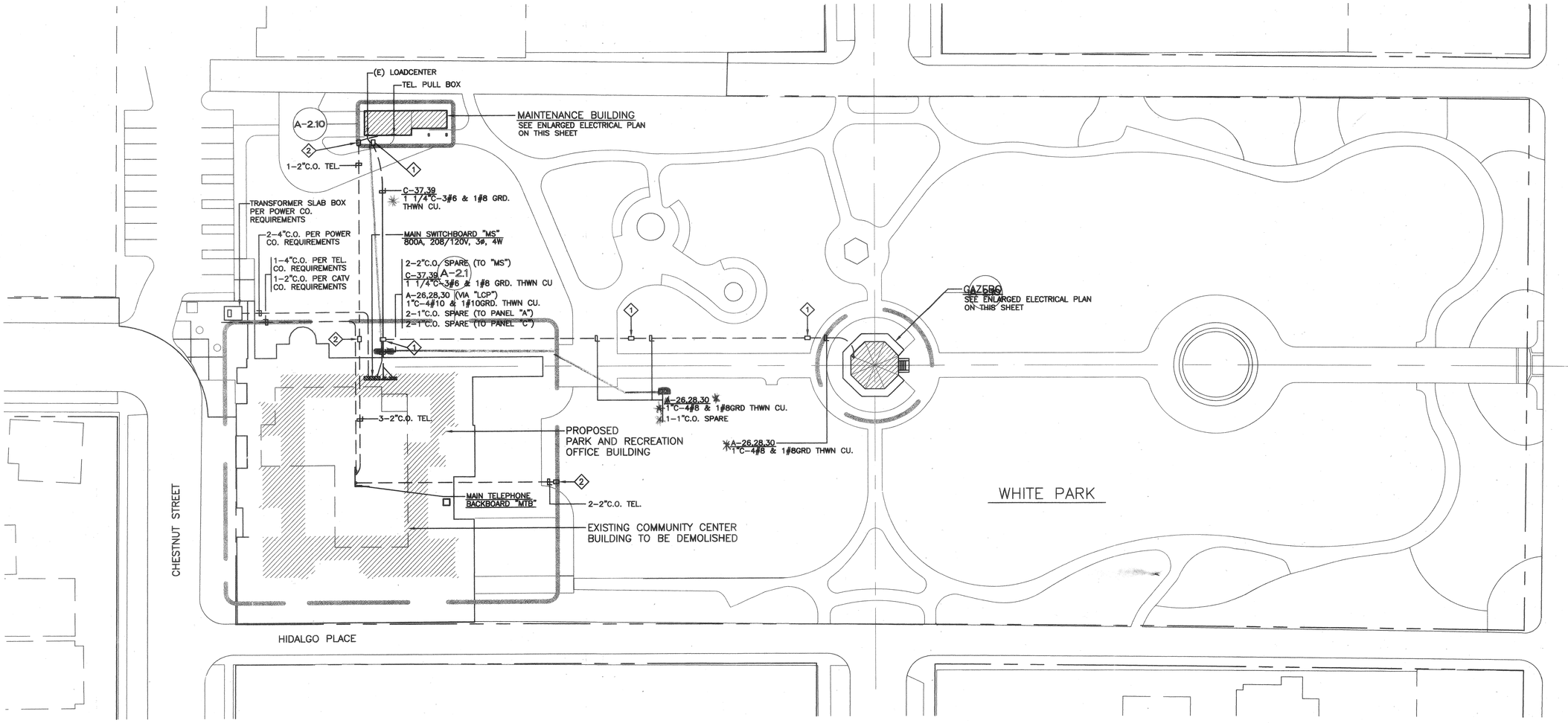

ELECTRICAL SITE PLAN

SCALE: 1" = 30'-0"

KROH/BROESKE
ARCHITECTS
6180 BROCKTON AVE.
RIVERSIDE, CA 92506
TEL 909 788-5940
FAX 909 275-0149

Park and Recreation Offices, White Park

3936 CHESTNUT ST.
RIVERSIDE, CALIFORNIA

CONSULTANTS

Consolidated Engineering
CONSULTING ELECTRICAL ENGINEERS
14000 SERVICE ROAD, SUITE C
VENTURA, CALIFORNIA, 93004
TEL. (714) 838-0640 FAX (714) 838-0407

NO.	DATE	REVISION
1	5-5-00	PLAN CHECK

THIS DRAWING AND THE DESIGNS, ARRANGEMENTS, DEPICTIONS, IDEAS AND OTHER INFORMATION CONTAINED HEREIN CONSTITUTE UNPUBLISHED WORK OF KROH/BROESKE ARCHITECTS AND SHALL REMAIN PROPERTY OF KROH/BROESKE ARCHITECTS IN PERPETUITY. NO PART THEREOF SHALL BE REPRODUCED, COPIED, DISCLOSED, DISTRIBUTED,SOLD, PUBLISHED OR OTHERWISE USED IN ANYWAY WITHOUT THE ADVANCE EXPRESS WRITTEN CONSENT OF KROH/BROESKE ARCHITECTS. VISUAL CONTACT WITH THE ABOVE DRAWINGS, OR ANY PART THEREOF, SHALL CONSTITUTE CONCLUSIVE EVIDENCE OF ACCEPTANCE OF THESE RESTRICTIONS.

SHEET TITLE

ELECTRICAL
SITE PLAN

DRAWN	
CHECKED	
SCALE	
DATE	
JOB	
SHEET	

E-3

JAN 26 2001

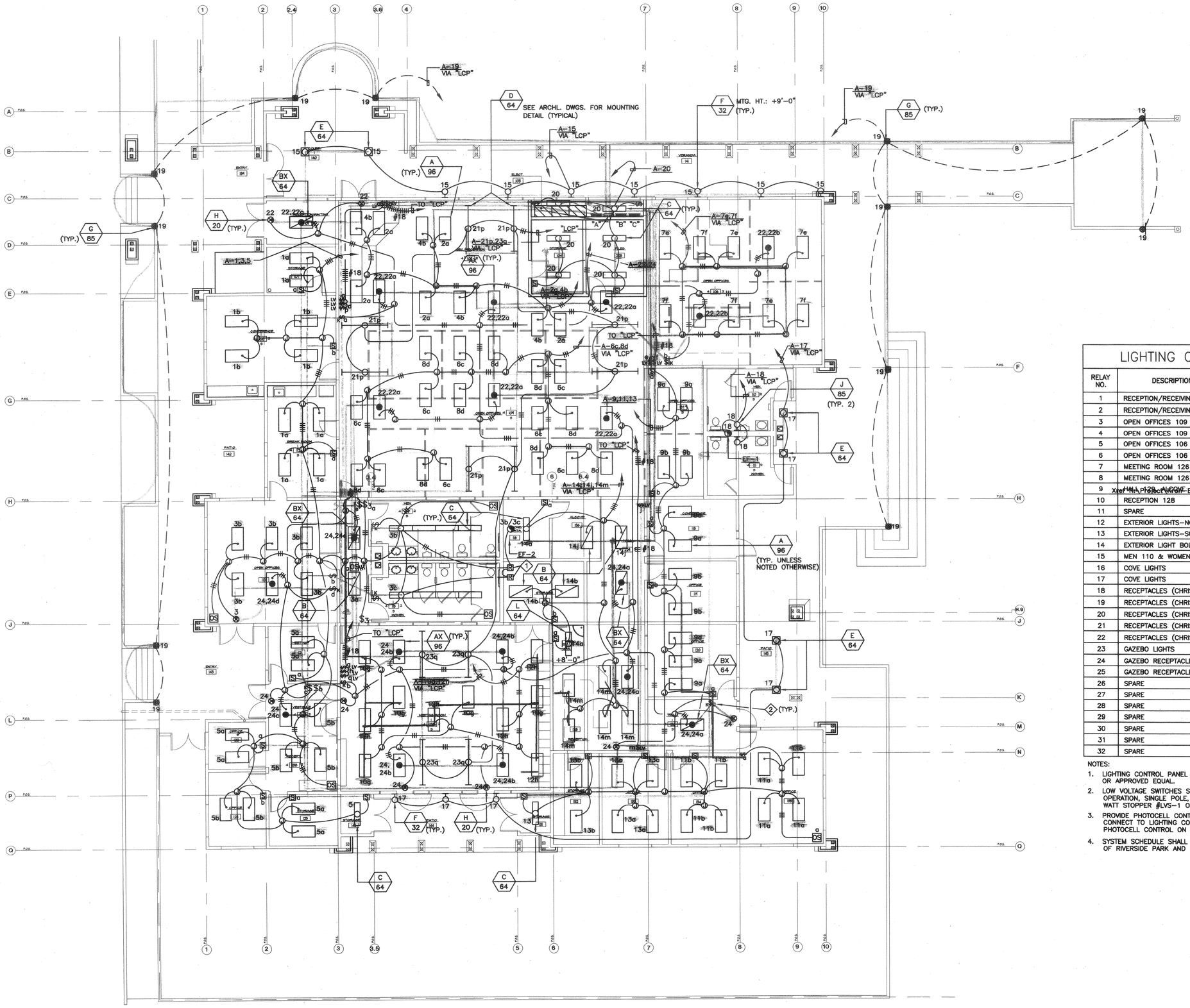

LIGHTING CONTROL PANEL "LCP"

RELAY NO.	DESCRIPTION	CKT. NO.	LOCAL L.V. SWITCH	T/C ZONE	P/C ZONE
1	RECEPTION/RECEIVING 102	A-2a	$a	1	
2	RECEPTION/RECEIVING 102	A-4b	$b	1	
3	OPEN OFFICES 109	A-6c	$c	1	
4	OPEN OFFICES 109	A-6d	$d	1	
5	OPEN OFFICES 106	A-7e	$e	1	
6	OPEN OFFICES 106	A-7f	$f	1	
7	MEETING ROOM 126	A-10g	$g	1	
8	MEETING ROOM 126	A-12h	$h	1	
9	ALCOVE 136	A-14j	$j	1	
10	RECEPTION 128	A-14m	$m	1	
11	SPARE				
12	EXTERIOR LIGHTS-NORTH	A-15		2	
13	EXTERIOR LIGHTS-SOUTH/EAST	A-17		2	
14	EXTERIOR LIGHT BOLLARDS	A-19		2	
15	MEN 110 & WOMEN 112 LTS.	A-18		3	
16	COVE LIGHTS	A-21	$p	4	
17	COVE LIGHTS	A-23	$q	4	
18	RECEPTACLES (CHRISTMAS LTS.)	A-25		5	
19	RECEPTACLES (CHRISTMAS LTS.)	A-27		5	
20	RECEPTACLES (CHRISTMAS LTS.)	A-29		5	
21	RECEPTACLES (CHRISTMAS LTS.)	A-31		5	
22	RECEPTACLES (CHRISTMAS LTS.)	A-33		5	
23	GAZEBO LIGHTS	A-26		6	
24	GAZEBO RECEPTACLES	A-28		7	
25	GAZEBO RECEPTACLES	A-30		7	
26	SPARE				
27	SPARE				
28	SPARE				
29	SPARE				
30	SPARE				
31	SPARE				
32	SPARE				

NOTES:

1. LIGHTING CONTROL PANEL SHALL BE WATT STOPPER #ACP-32-C-32R-120V OR APPROVED EQUAL.
2. LOW VOLTAGE SWITCHES SHALL BE HEAVY DUTY, MOMENTARY ON/OFF CONTACT OPERATION, SINGLE POLE, DOUBLE-THROW WITH CENTER POSITION REST. WATT STOPPER #LVS-1 OR APPROVED EQUAL.
3. PROVIDE PHOTOCELL CONTROL, WATT STOPPER #EM-24A2, ON ROOF AND CONNECT TO LIGHTING CONTROL PANEL. PROVIDE 1/2"C-4#12 FROM "LCP" TO PHOTOCELL CONTROL ON ROOF.
4. SYSTEM SCHEDULE SHALL BE PROGRAMMED AS DIRECTED BY THE CITY OF RIVERSIDE PARK AND RECREATION DEPARTMENT.

KROH/BROESKE
ARCHITECTS
6180 BROCKTON AVE.
RIVERSIDE, CA 92506
TEL 909 788-5940
FAX 909 275-0149

Park and Recreation Offices, White Park

3936 CHESTNUT ST.
RIVERSIDE, CALIFORNIA

CONSULTANTS

Consolidated Engineering
CIVIL STRUCTURAL MECHANICAL ELECTRICAL
10805 MYRTLE ROAD, SUITE G
VENTURA, CALIFORNIA 93004
TEL (818) 886-0099 FAX (818) 886-0097

NO.	DATE	REVISION
1	5-5-00	PLAN CHECK

THIS DRAWING AND THE DESIGNS, ARRANGEMENTS, DEPICTIONS, IDEAS AND OTHER INFORMATION CONTAINED HEREIN CONSTITUTE UNPUBLISHED WORK OF KROH/BROESKE ARCHITECTS AND SHALL REMAIN PROPERTY OF KROH/BROESKE ARCHITECTS IN PERPETUITY. NO PART THEREOF SHALL BE REPRODUCED, COPIED, DISCLOSED, DISTRIBUTED,SOLD, PUBLISHED OR OTHERWISE USED IN ANYWAY WITHOUT THE ADVANCE EXPRESS WRITTEN CONSENT OF KROH/BROESKE ARCHITECTS. VISUAL CONTACT WITH THE ABOVE DRAWINGS, OR ANY PART THEREOF, SHALL CONSTITUTE CONCLUSIVE EVIDENCE OF ACCEPTANCE OF THESE RESTRICTIONS.

SHEET TITLE

LIGHTING PLAN

DRAWN
CHECKED
SCALE
DATE
JOB
SHEET

E-4

JAN 26 2001

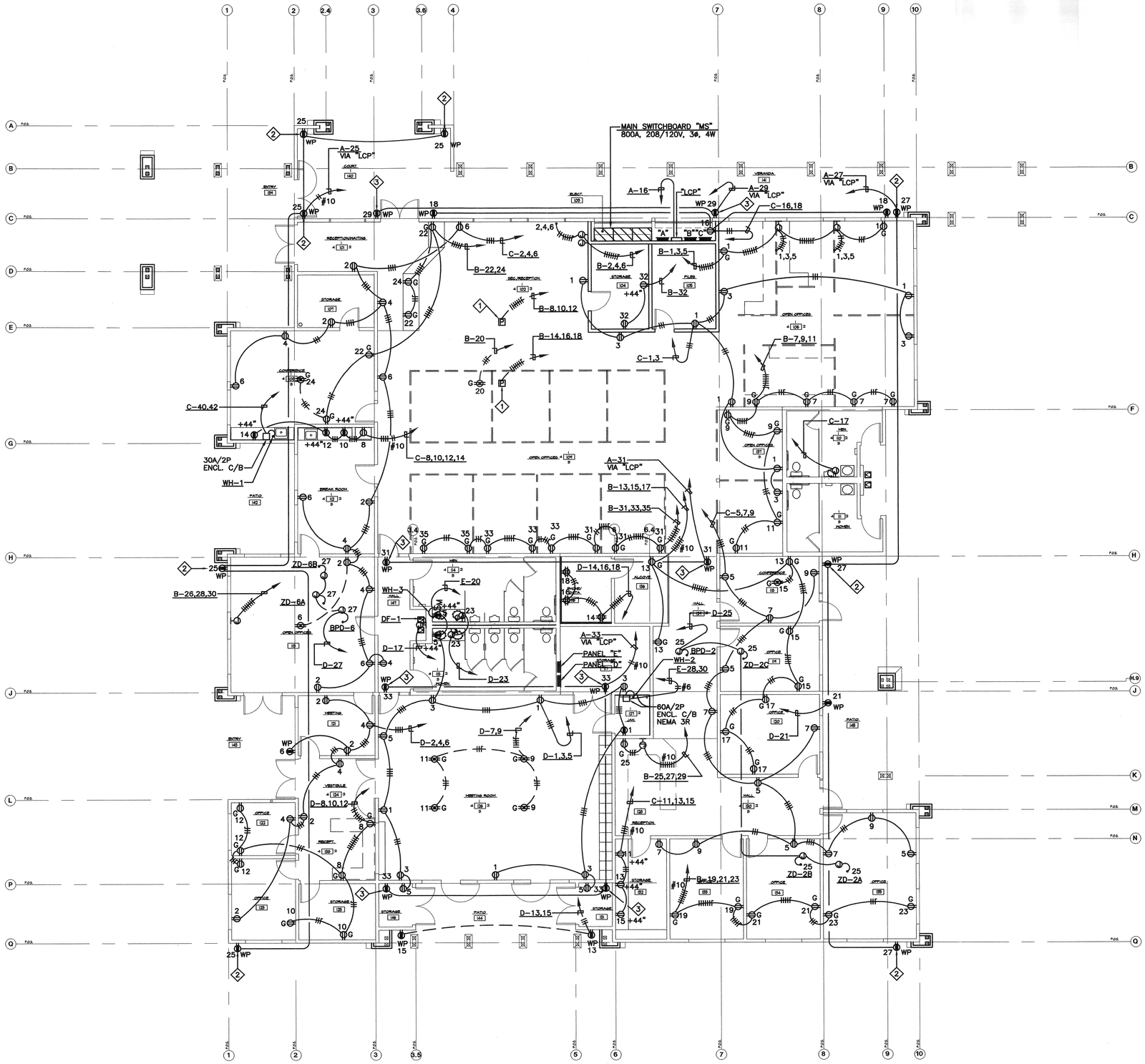

PLAN NOTES

1. PROVIDE FLUSH FLOOR MOUNTED JUNCTION BOX FOR POWER AND AND ALL REQUIRED FLEXIBLE CONDUIT CONNECTIONS TO WALL PANELS. VERIFY EXACT LOCATION OF FLOOR BOXES WITH THE FURNITURE SUPPLIER PRIOR TO INSTALLATION. FLOOR BOXES SHALL BE DEEP TYPE, RECTANGULAR, COMPLETE WITH FITTINGS, COVERS AND CARPET FLANGES. HUBBELL OR EQUAL. INSTALL JUNCTION BOXES ADJACENT TO TELEPHONE AND DATA FLOOR BOXES. SEE SHEET E-6.
2. MOUNT RECEPTACLE BELOW ROOF (FOR CHRISTMAS LIGHTS)
3. MOUNT RECEPTACLE BELOW HIGH ROOF. (FOR CHRISTMAS LIGHTS)

KROH/BROESKE
ARCHITECTS
6180 BROCKTON AVE.
RIVERSIDE, CA 92506
TEL 909 788-5940
FAX 909 275-0149

Park and Recreation Offices, White Park

3936 CHESTNUT ST.
RIVERSIDE, CALIFORNIA

Consolidated Engineering
CORONA 1960 IRON STREET, SUITE C 92878 (951) 736-1820
RIVERSIDE 3890 ORANGE PLACE, SUITE C 92501 (951) 781-6405
TEL (714) 939-0049 FAX (714) 939-0487

NO.	DATE	REVISION
1	5-5-00	PLAN CHECK

LICENSED ARCHITECT JAMES L. BROESKE C009174 Ren 11-30-01 STATE OF CALIFORNIA

THIS DRAWING AND THE DESIGNS, ARRANGEMENTS, DEPICTIONS, IDEAS, AND OTHER INFORMATION CONTAINED HEREIN CONSTITUTE EMBODIMENTS OF KROH/BROESKE ARCHITECTS AND SHALL REMAIN PROPERTY OF KROH/BROESKE ARCHITECTS IN RESPECTIVE FULL OR PARTIAL FORM OR IN ANY MANNER REPRODUCED, COPIED, DISCLOSED, DISTRIBUTED, PUBLISHED OR OTHERWISE USED IN ANYWAY WITHOUT THE EXPRESS, CONCISE WRITTEN CONSENT OF KROH/BROESKE ARCHITECTS. SHALL CONTACT WITH THE SALE OF DRAWINGS, OR ANY PART THEREOF, SHALL CONSTITUTE CONCLUSIVE EVIDENCE OF ACCEPTANCE OF THESE RESTRICTIONS.

SHEET TITLE

POWER PLAN

DRAWN	
CHECKED	
SCALE	
DATE	
JOB	
SHEET	

E-5

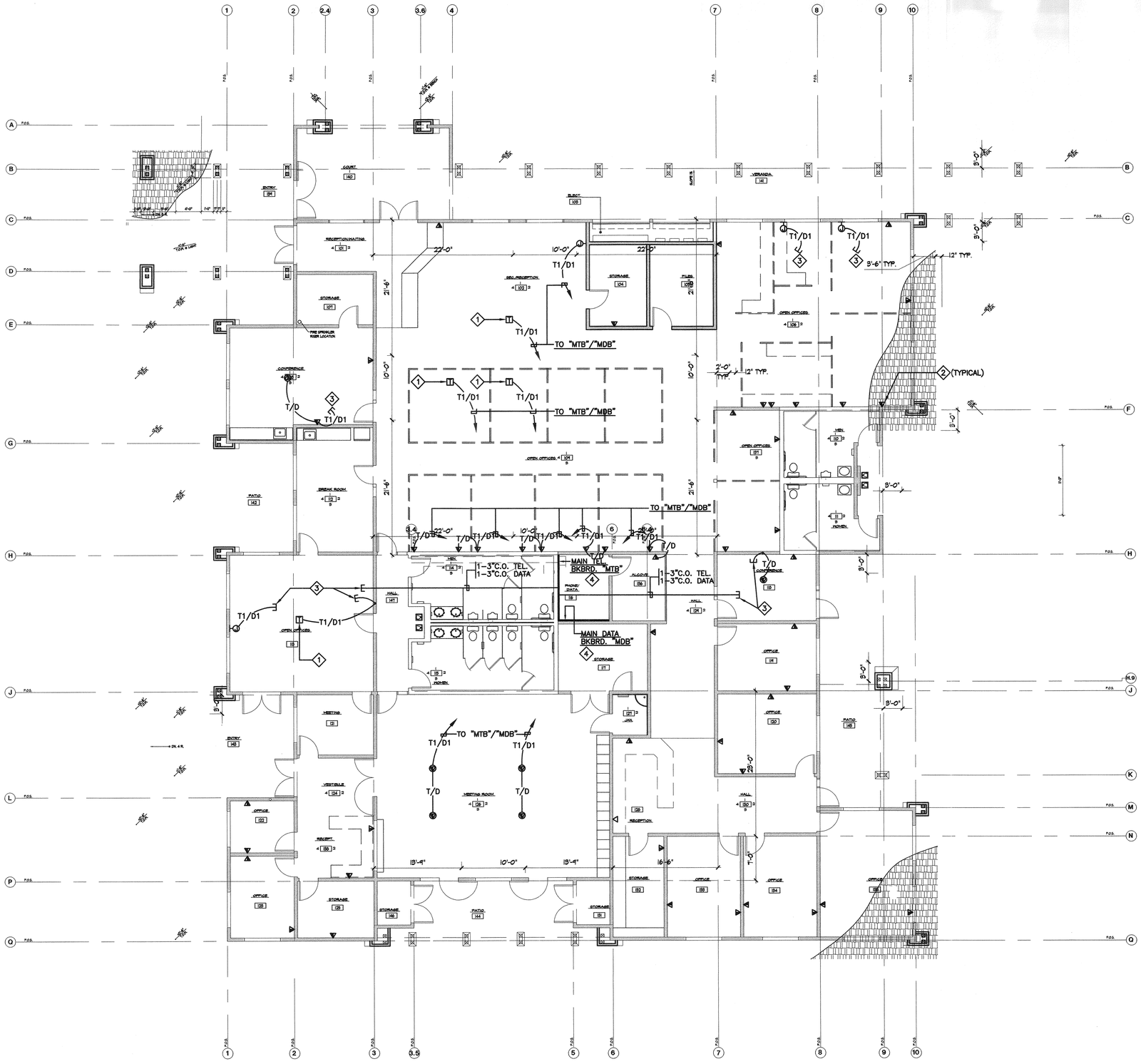

1 PROVIDE FLUSH FLOOR MOUNTED JUNCTION BOX FOR TELEPHONE AND DATA AND ALL REQUIRED FLEXIBLE CONDUIT CONNECTIONS TO WALL PANELS. VERIFY EXACT LOCATION OF FLOOR BOXES WITH THE FURNITURE SUPPLIER PRIOR TO INSTALLATION. FLOOR BOXES SHALL BE DEEP TYPE, RECTANGULAR, COMPLETE WITH FITTINGS, COVERS AND CARPET FLANGES. HUBBELL OR EQUAL.

2 PROVIDE 1-3/4"C.O. TEL. AND 1-3/4" C.O. DATA TO ACCESSIBLE CEILING SPACE.

3 STUB CONDUIT INTO ACCESSIBLE CEILING SPACE.

4 PROVIDE 3/4" THICK X 8' HIGH TREATED PLYWOOD BACKBOARD.

KROH/BROESKE
ARCHITECTS
6180 BROCKTON AVE.
RIVERSIDE, CA 92506
TEL 909 788-5640
FAX 909 275-0140

Park and Recreation Offices, White Park

3936 CHESTNUT ST.
RIVERSIDE, CALIFORNIA

CONSULTANTS •

NO.	DATE	REVISION
1	5-5-00	PLAN CHECK

LICENSED ARCHITECT
JAMES L. BROESKE
No. C009174
Ren 11-30-01
STATE OF CALIFORNIA

THIS DRAWING AND THE DESIGNS, ARRANGEMENTS, DEPICTIONS, IDEAS AND OTHER INFORMATION CONTAINED HEREIN CONSTITUTE UNPUBLISHED WORK OF KROH/BROESKE ARCHITECTS AND SHALL REMAIN PROPERTY OF KROH/BROESKE ARCHITECTS IN PERPETUITY. NO PART THEREOF SHALL BE REPRODUCED, COPIED, DISCLOSED, DISTRIBUTED,SOLD, PUBLISHED OR OTHERWISE USED IN ANYWAY WITHOUT THE ADVANCE EXPRESS WRITTEN CONSENT OF KROH/BROESKE ARCHITECTS. ANY CONTACT WITH THE ABOVE DRAWINGS OR ANY PART THEREOF, SHALL CONSTITUTE CONCLUSIVE EVIDENCE OF ACCEPTANCE OF THESE RESTRICTIONS.

SHEET TITLE •

SIGNAL PLAN

DRAWN	•
CHECKED	•
SCALE	•
DATE	•
JOB	•
SHEET	•

E-6

1. PROVIDE FLUSH FLOOR MOUNTED JUNCTION BOX FOR TELEPHONE AND DATA AND ALL REQUIRED FLEXIBLE CONDUIT CONNECTIONS TO WALL PANELS. VERIFY EXACT LOCATION OF FLOOR BOXES WITH THE FURNITURE SUPPLIER PRIOR TO INSTALLATION. FLOOR BOXES SHALL BE DEEP TYPE, RECTANGULAR COMPLETE WITH FITTINGS, COVERS AND CARPET FLANGES. STEELCASE OR EQUAL.
2. PROVIDE 1-3/4" C.O. TEL. AND 1-3/4" C.O. DATA TO ACCESSIBLE CEILING SPACE.
3. STUB CONDUIT INTO ACCESSIBLE CEILING SPACE.
4. PROVIDE 3/4" THICK X 8' HIGH TREATED PLYWOOD BACKBOARD.

+14

△ = combination w/ 1 Box & Conduit

KROH/BROESKE
ARCHITECTS
6180 BROCKTON AVE.
RIVERSIDE, CA 92506
TEL 909 788-8140
FAX 909 276-0149

Park and Recreation Offices, White Park

3936 CHESTNUT ST.
RIVERSIDE, CALIFORNIA

CONSULTANTS •

NO.	DATE
1	5-5-00

THIS DRAWING AND DESIGN, AND ALL OTHER INFORMATION CONTAINED HEREIN, IS THE PROPERTY OF KROH/BROESKE ARCHITECTS AND SHALL NOT BE USED BY ANY PERSON FOR ANY PURPOSE WITHOUT THE WRITTEN CONSENT OF KROH/BROESKE ARCHITECTS, AND SHALL NOT BE LOANED, COPIED, REPRODUCED OR USED IN ANY MANNER WHATSOEVER EXCEPT AS AUTHORIZED IN WRITING BY KROH/BROESKE ARCHITECTS. ANY UNAUTHORIZED USE, REPRODUCTION OR ART PART THEREOF SHALL BE AN INFRINGEMENT OF THE COPYRIGHT OF KROH/BROESKE ARCHITECTS.

SHEET TITLE

SIGNAL

DRAWN	•
CHECKED	•
SCALE	•
DATE	•
JOB	•
SHEET	•

E-6

JAN 28 2001

CONSTRUCTION SET

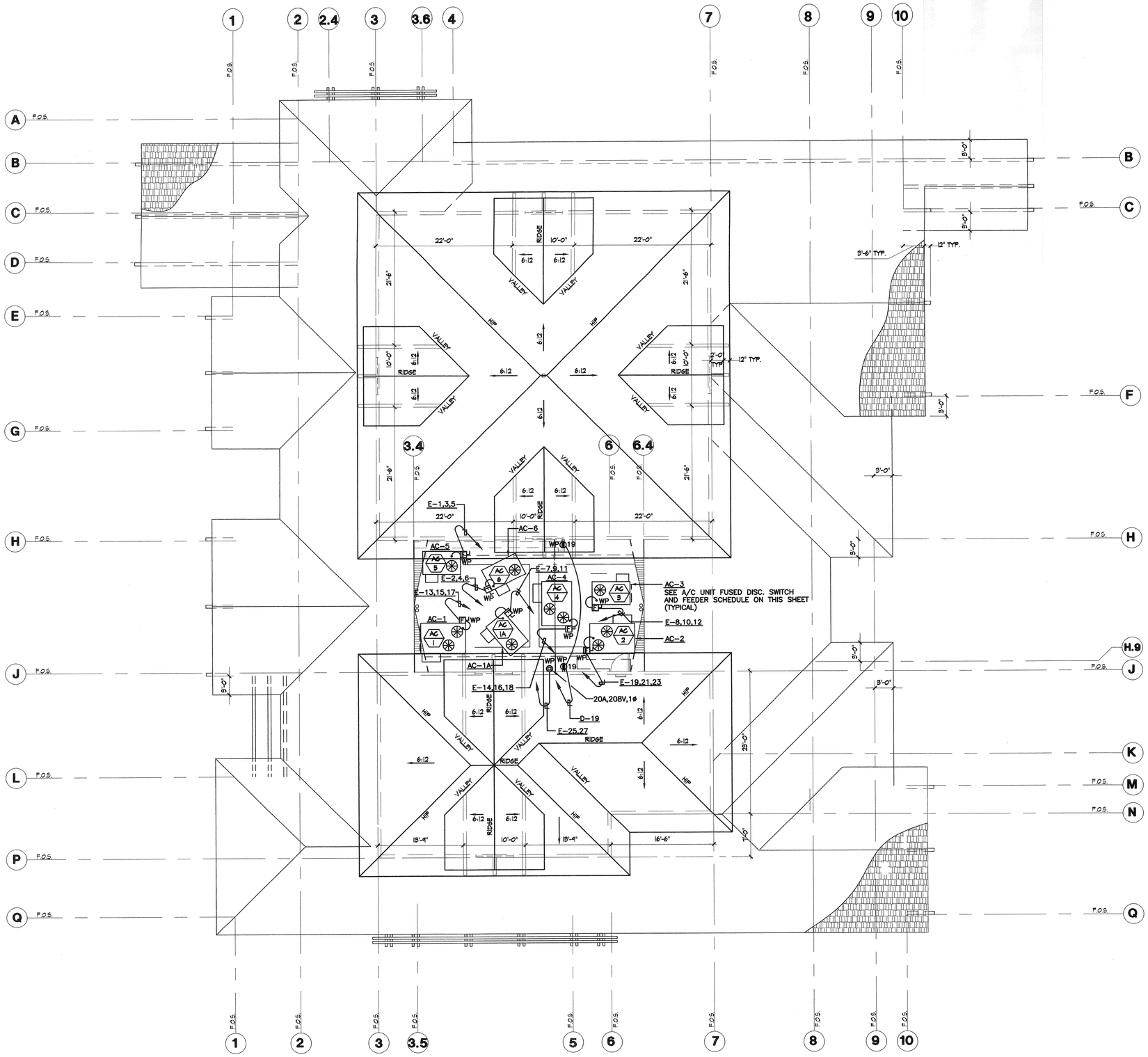

A/C UNIT FUSED DISC. & FEEDER SCHEDULE		
A/C UNIT	FUSED DISC. SWITCH	FEEDER
A/C-1	60AS/3P/40AF/WP	1"C-3#6 & 1#10G THWN CU.
A/C-1A	30AS/3P/25AF/WP	3/4"C-3#10 & 1#10G THWN CU.
A/C-2	60AS/3P/40AF/WP	1"C-3#6 & 1#10G THWN CU.
A/C-3	60AS/3P/35AF/WP	3/4"C-3#8 & 1#10G THWN CU.
A/C-4	60AS/3P/40AF/WP	1"C-3#6 & 1#10G THWN CU.
A/C-5	30AS/3P/20AF/WP	3/4"C-3#10 & 1#10G THWN CU.
A/C-6	30AS/3P/20AF/WP	3/4"C-3#10 & 1#10G THWN CU.

NOTE: SIZE A/C UNIT OVERCURRENT PROTECTION PER NAMEPLATE OR MANUFACTURER'S RECOMMENDATION.

KROH/BROESKE
ARCHITECTS
6180 BROCKTON AVE.
RIVERSIDE, CA 92506
TEL 909 788-5040
FAX 909 275-0140

Park and Recreation Offices, White Park
3936 CHESTNUT ST.
RIVERSIDE, CALIFORNIA

CONSULTANTS

Consolidated Engineering
CONSULTING ELECTRICAL ENGINEERS
10681 HAVEN ROAD, SUITE C
TEL (714) 838-8467 FAX (714) 838-8487

NO.	DATE	REVISION
1	5-3-00	PLAN CHECK

LICENSED ARCHITECT
JAMES L. BROESKE
C009174
Ren 11-30-01
STATE OF CALIFORNIA

THIS DRAWING AND THE DESIGNS, ARRANGEMENTS, DEPICTIONS, IDEAS AND OTHER INFORMATION CONTAINED HEREIN CONSTITUTE UNPUBLISHED WORK OF KROH/BROESKE ARCHITECTS AND SHALL REMAIN PROPERTY OF KROH/BROESKE ARCHITECTS IN PERPETUITY. NO PART THEREOF SHALL BE REPRODUCED, COPIED, DISCLOSED, DISTRIBUTED/SOLD, PUBLISHED OR OTHERWISE USED IN ANYWAY WITHOUT THE ADVANCE EXPRESS WRITTEN CONSENT OF KROH/BROESKE ARCHITECTS. VISUAL CONTACT WITH THE ABOVE DRAWINGS, OR ANY PART THEREOF, SHALL CONSTITUTE CONCLUSIVE EVIDENCE OF ACCEPTANCE OF THESE RESTRICTIONS.

SHEET TITLE

ROOF ELECTRICAL PLAN

DRAWN
CHECKED
SCALE
DATE
JOB
SHEET

E-7

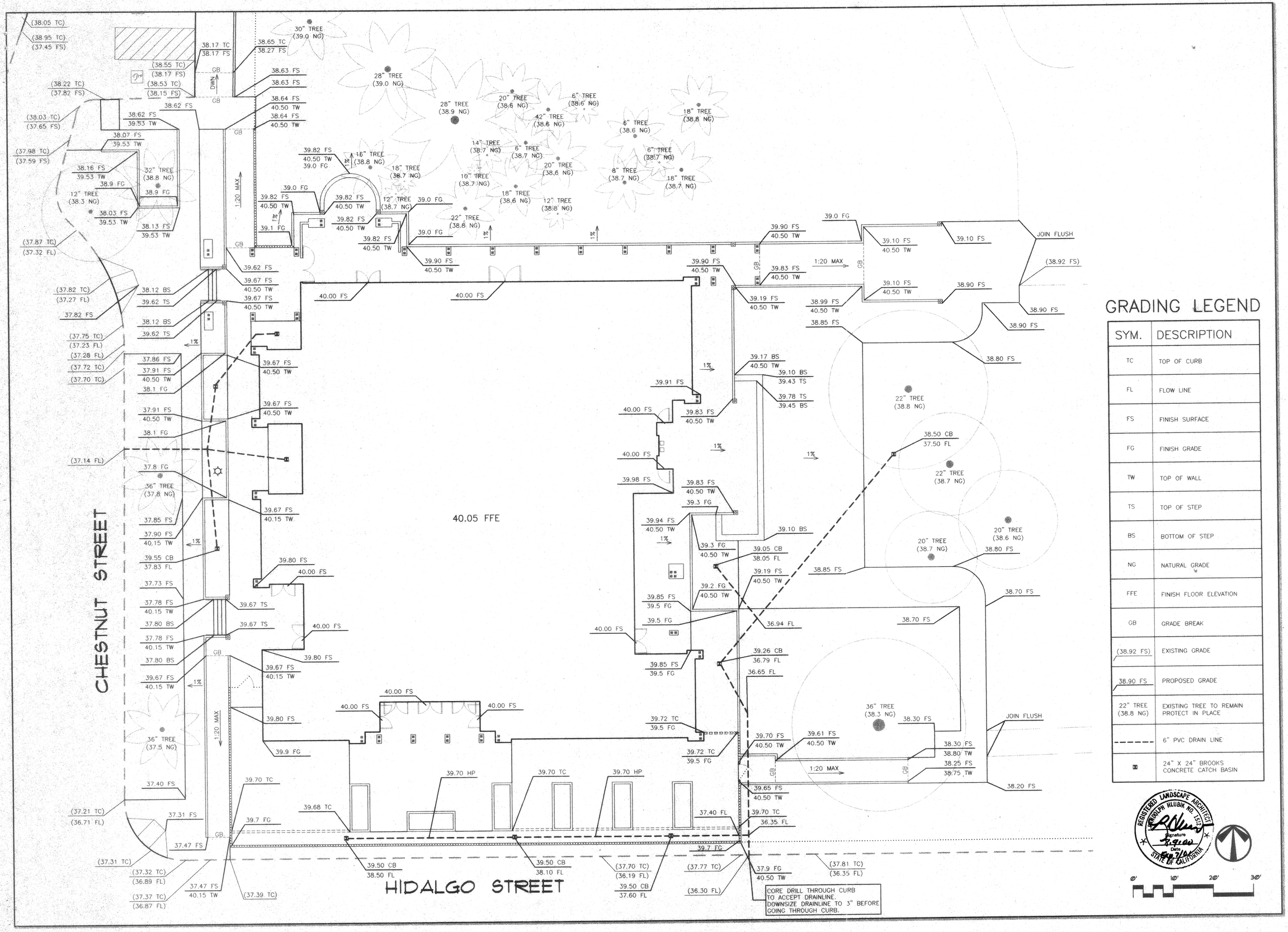

GRADING LEGEND

SYM.	DESCRIPTION
TC	TOP OF CURB
FL	FLOW LINE
FS	FINISH SURFACE
FG	FINISH GRADE
TW	TOP OF WALL
TS	TOP OF STEP
BS	BOTTOM OF STEP
NG	NATURAL GRADE
FFE	FINISH FLOOR ELEVATION
GB	GRADE BREAK
(38.92 FS)	EXISTING GRADE
38.90 FS	PROPOSED GRADE
22" TREE (38.8 NG)	EXISTING TREE TO REMAIN PROTECT IN PLACE
- - - - -	6" PVC DRAIN LINE
⊠	24" X 24" BROOKS CONCRETE CATCH BASIN

REGISTERED LANDSCAPE ARCHITECT RANDOLPH HLUBIK NO. 1512 Signature 8.9.00 Date Exp. 7/01 STATE OF CALIFORNIA

0' 10' 20' 30'

RHA LANDSCAPE ARCHITECTS PLANNERS INC
3612 MISSION INN AVE
RIVERSIDE, CALIFORNIA 92501
LIC. #1512
PH. (909) 781-1930
FAX (909) 686-8091

CLIENT:
CITY OF RIVERSIDE
PARK AND REC. DEPARTMENT
3900 MAIN ST.
RIVERSIDE, CA 92501

PROJECT:
WHITE PARK
CITY OF RIVERSIDE
PARK and RECREATION OFFICES

REVISIONS	DATE	BY
1 PLANCHECK	5/5/00	

REGISTERED LANDSCAPE ARCHITECT RANDOLPH HLUBIK NO. 1512 Signature 7/31/01 Date STATE OF CALIFORNIA

SHEET TITLE
GRADING PLAN

DESIGNED	DG
DRAWN	---
CHECKED	DG
DATE	4/21/00
SCALE	1"=10'
JOB NO.	99105

SHEET
G-1
OF 7 SHEETS

FILE NAME: G:\PRJ\99105\AUTOCAD\99105GP2.DWG

PLOT DATE: 7-25-00

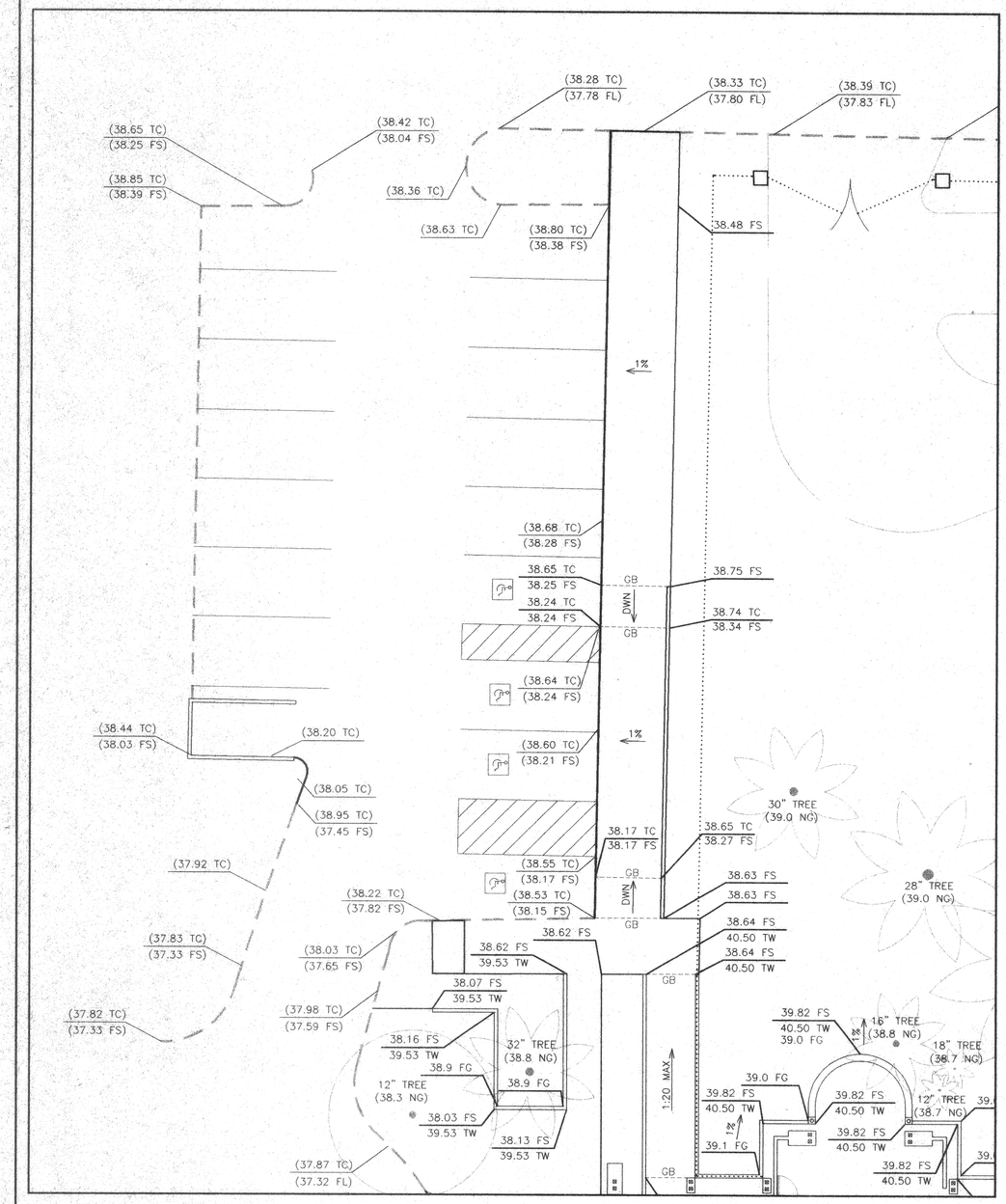

PARKING LOT GRADING PLAN

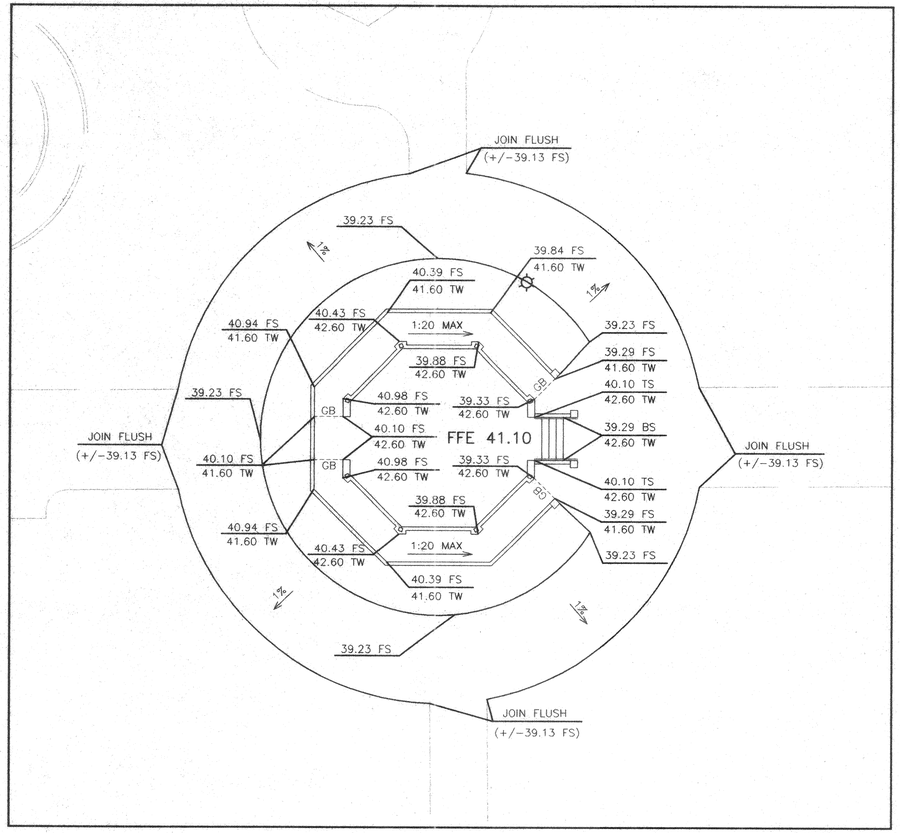

GAZEBO GRADING PLAN

GRADING LEGEND

SYM.	DESCRIPTION
TC	TOP OF CURB
FL	FLOW LINE
FS	FINISH SURFACE
FG	FINISH GRADE
TW	TOP OF WALL
TS	TOP OF STEP
BS	BOTTOM OF STEP
NG	NATURAL GRADE
FFE	FINISH FLOOR ELEVATION
GB	GRADE BREAK
(38.92 FS)	EXISTING GRADE
38.90 FS	PROPOSED GRADE
22" TREE (38.8 NG)	EXISTING TREE TO REMAIN PROTECT IN PLACE
------	6" PVC DRAIN LINE
⊠	24" X 24" BROOKS CONCRETE CATCH BASIN

REGISTERED LANDSCAPE ARCHITECT
RANDOLPH HLUBIK NO. 1512
Signature
4.19.00
Date
7/26/00
STATE OF CALIFORNIA

0' 10' 20' 30'

RHA
LANDSCAPE ARCHITECTS PLANNERS, INC.
3612 MISSION INN AVE
RIVERSIDE, CALIFORNIA
92501
LIC. #1512
PH. (909) 781-1930
FAX (909) 686-8091

CLIENT:
CITY OF RIVERSIDE
PARK AND REC. DEPARTMENT
3900 MAIN ST.
RIVERSIDE, CA 92501

PROJECT:
WHITE PARK
CITY OF RIVERSIDE
PARK and RECREATION OFFICES

REVISIONS	DATE	BY
1 PLAN CHECK	5/5/00	

REGISTERED LANDSCAPE ARCHITECT
RANDOLPH HLUBIK NO. 1512
Signature
7/26/00
Renewal Date
Date
STATE OF CALIFORNIA

SHEET TITLE
GRADING PLAN

DESIGNED	DG
DRAWN	---
CHECKED	DG
DATE	4/21/00
SCALE	1"=10'
JOB NO.	9905

SHEET
G-2
OF 7 SHEETS

FILE NAME: G:\PROJECTS\9905\AUTOCAD\9905P2.DWG

PLOT DATE: 7-25-00

© RHA Landscape Architects, Inc. 2000 The drawings, ideas and designs incorporated herein, as an instrument of service, are the property of RHA Landscape Architects, Inc. and may not be used in whole or part for any other project without the written authorization of RHA Landscape Architects, Inc. Visual contact with these plans shall constitute prima facie evidence of acceptance of these restrictions.

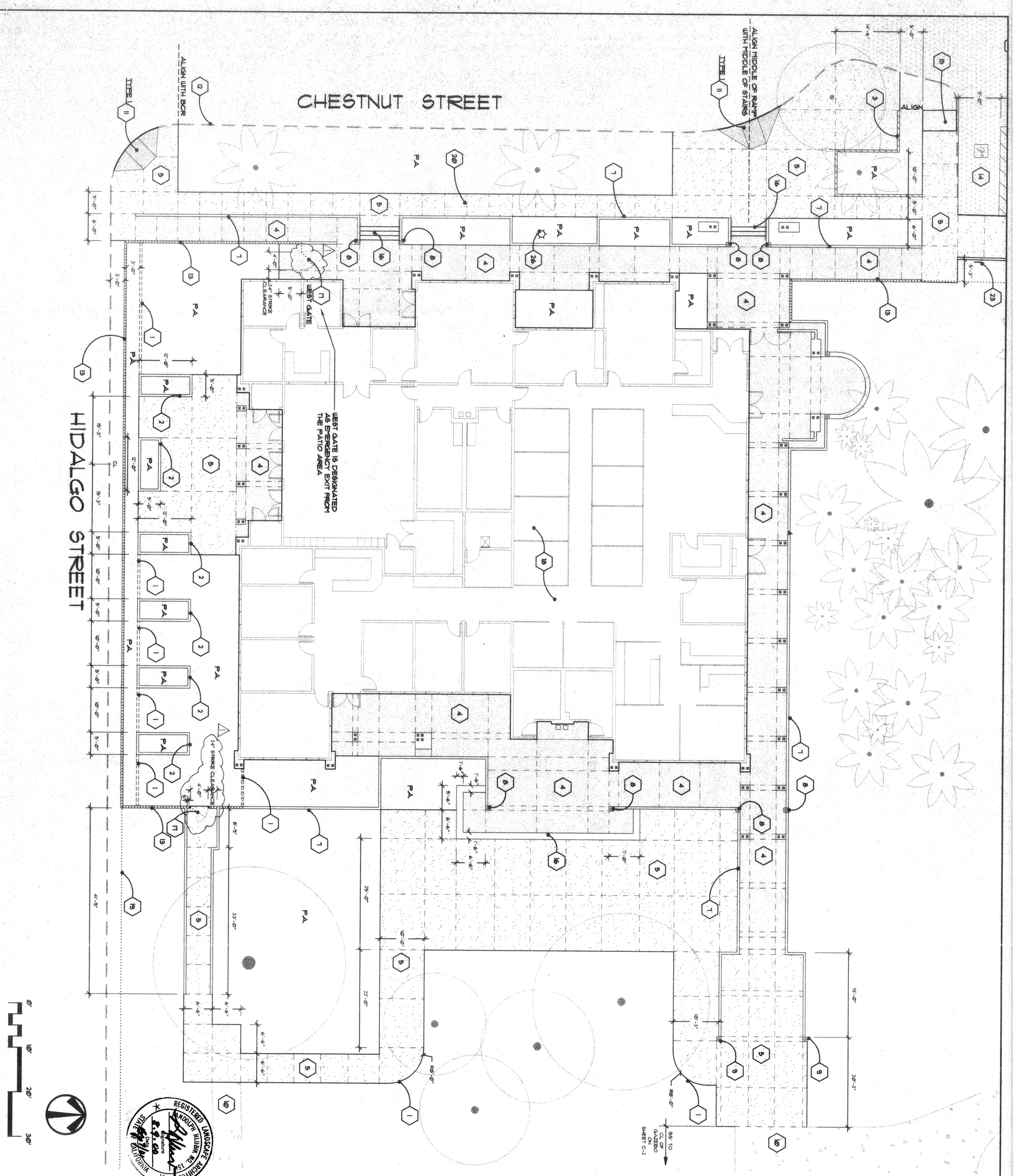

CONSTRUCTION LEGEND

BID STATUS	SYM.	QTY.	DESCRIPTION	REMARKS/DETAIL	SUPPLIER
BASE BID	1	L.S.	CONSTRUCT CONCRETE MOW CURB	DETAIL 'A', SHEET CD-1	N.A.
BASE BID	2	L.S.	CONSTRUCT CONCRETE PLANTER	DETAIL 'B', SHEET CD-1	N.A.
BASE BID	3	L.S.	CONSTRUCT CONCRETE SEAT WALL	DETAIL 'C', SHEET CD-1	N.A.
BASE BID	4	N.A.	CONCRETE PAVING PER ARCHITECTURAL PLANS	N.A.	N.A.
BASE BID	5	L.S.	CONSTRUCT 4" THICK CONCRETE PAVING, NATURAL GRAY	DETAIL 'D', SHEET CD-1	N.A.
BASE BID	6	L.S.	CONSTRUCT TRASH ENCLOSURE	DETAIL 'B', SHEET CD-2	
BASE BID	7	N.A.	CONCRETE WALL PER ARCHITECTURAL PLANS	N.A.	N.A.
BASE BID	8	N.A.	CONCRETE WALL & PILASTER PER ARCHITECTURAL PLANS	N.A.	N.A.
BASE BID	9	N.A.	CONCRETE PILASTER PER ARCHITECTURAL PLANS	N.A.	N.A.
BASE BID	10	N.A.	EXISTING CONCRETE PAVING TO REMAIN - PROTECT IN PLACE	N.A.	N.A.
BASE BID	11	3	CONSTRUCT HANDICAP RAMP	CITY OF RIVERSIDE STD. DWG. #304	N.A.
BASE BID	12	N.A.	EXISTING CONCRETE CURB TO REMAIN - PROTECT IN PLACE	N.A.	N.A.
BASE BID	13	L.S.	CONSTRUCT CONCRETE WALL W/ IRON FENCE	DETAIL 'E', SHEET CD-1	N.A.
BASE BID	14	4	INSTALL HANDICAP PARKING & STALL	DETAIL 'F', SHEET CD-1	N.A.
BASE BID	15	1	EXISTING ELECTRIC VAULT TO REMAIN - PROTECT IN PLACE	N.A.	N.A.
BASE BID	16	L.S.	CONSTRUCT CONCRETE STAIRS	DETAIL 'G', SHEET CD-1	N.A.
BASE BID	17	2	CONSTRUCT IRON GATE	DETAIL 'E', SHEET CD-1	N.A.
BASE BID	18	N.A.	NEW BUILDING PER ARCHITECTURAL PLANS	N.A.	N.A.
BASE BID	19	L.S.	CONSTRUCT IRON FENCE	DETAIL 'E', SHEET CD-1	N.A.
BASE BID	20	L.S.	INSTALL SCORE JOINT	DETAIL 'D', SHEET CD-1	N.A.
BASE BID	21	N.A.	EXISTING PARKING LOT	N.A.	N.A.
BASE BID	22	8	INSTALL PARKING LOT STRIPING PER SPECIFICATIONS	N.A.	N.A.
BASE BID	23	5	INSTALL HANDICAP PARKING SIGNS	DETAIL 'J', SHEET CD-1	N.A.
BASE BID	24	N.A.	NEW GAZEBO & WALLS PER ARCHITECTURAL PLANS	N.A.	N.A.
BASE BID	25	L.S.	CONSTRUCT CONCRETE CURB	CITY OF RIVERSIDE STD. DWG. #200 - TYPE II	N.A.
BASE BID	26	2	EXISTING LIGHT TO REMAIN - PROTECT IN PLACE	N.A.	N.A.
BASE BID	27	L.S.	INSTALL ASPHALT SLURRY SEAL PER SPECIFICATIONS	N.A.	N.A.

REGISTERED LANDSCAPE ARCHITECT — STATE OF CALIFORNIA — RANDOM ROBIN MORTH — No. 1544

SHEET C-1 OF 1 SHEETS

SHEET TITLE: CONSTUCTION PLAN

DESIGNED	DG
DRAWN	DG
CHECKED	RM
DATE	4/21/09
SCALE	1"=10'
JOB NO.	9905

REVISIONS

	DATE	BY
1 PLANCHECK	9/6/09	

PROJECT:

WHITE PARK
CITY OF RIVERSIDE
PARK and RECREATION OFFICES

CLIENT:

CITY OF RIVERSIDE
PARK AND REC. DEPARTMENT
3900 MAIN ST.
RIVERSIDE, CA 92501

RJA LANDSCAPE ARCHITECTURE
3512 MISSION INN AVE
RIVERSIDE, CALIFORNIA
92501
LIC. #1512
PH. (909) 781-1550
FAX (909) 686-8091

PLOT DATE: 7-28-09

FILE NAME: G:\PROJECTS\9905\AUTOCAD\9905CP2.DWG

© R J A Landscape Architects + Planners, Inc. expressly reserves its common law copyright and other property rights to these plans. These plans are not to be reproduced, changed or copied in any form or manner whatsoever nor are they to be assigned to any third party without first obtaining the express written permission.

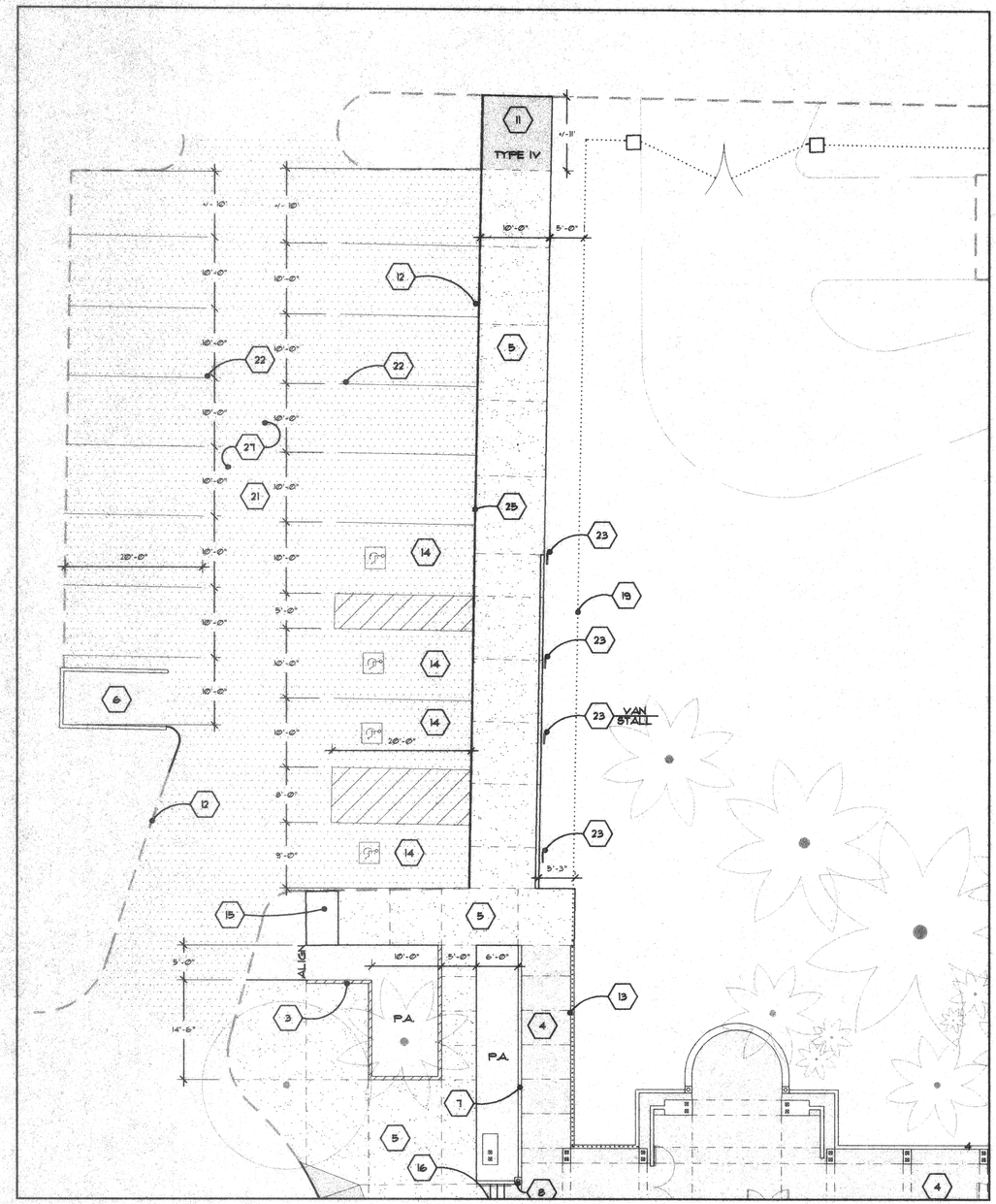

PARKING LOT CONSTRUCTION PLAN

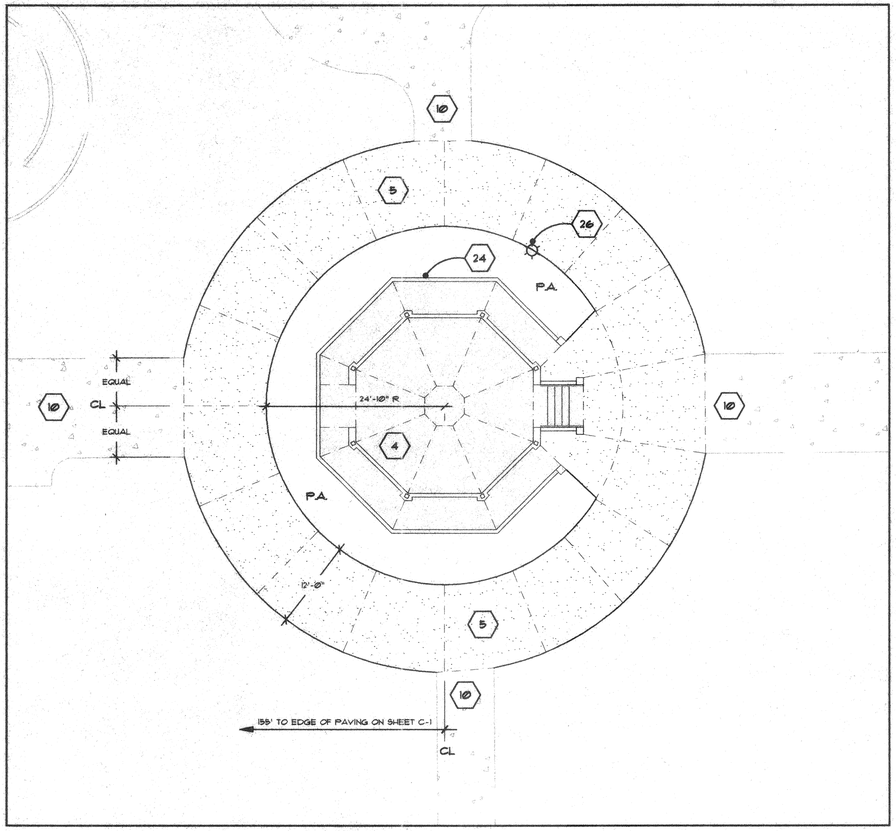

GAZEBO AREA CONSTRUCTION PLAN

REGISTERED LANDSCAPE ARCHITECT
ADOLPH HLUBIK NO. 1512
Signature
5.9.00
Date
STATE OF CALIFORNIA

0' 10' 20' 30'

CONSTRUCTION LEGEND

BID STATUS	SYM.	QTY.	DESCRIPTION	REMARKS/DETAIL	SUPPLIER
BASE BID	1	L.S.	CONSTRUCT CONCRETE MOW CURB	DETAIL 'A', SHEET CD-1	N.A.
BASE BID	2	L.S.	CONSTRUCT CONCRETE PLANTER	DETAIL 'B', SHEET CD-1	N.A.
BASE BID	3	L.S.	CONSTRUCT CONCRETE SEAT WALL	DETAIL 'C', SHEET CD-1	N.A.
BASE BID	4	N.A.	CONCRETE PAVING PER ARCHITECTURAL PLANS	N.A.	N.A.
BASE BID	5	L.S.	CONSTRUCT 4" THICK CONCRETE PAVING, NATURAL GRAY	DETAIL 'D', SHEET CD-1	N.A.
BASE BID	6	L.S.	CONSTRUCT TRASH ENCLOSURE	DETAIL 'B', SHEET CD-2	
BASE BID	7	N.A.	CONCRETE WALL PER ARCHITECTURAL PLANS	N.A.	N.A.
BASE BID	8	N.A.	CONCRETE WALL & PILASTER PER ARCHITECTURAL PLANS	N.A.	N.A.
BASE BID	13	N.A.	CONCRETE PILASTER PER ARCHITECTURAL PLANS	N.A.	N.A.

BID STATUS	SYM.	QTY.	DESCRIPTION	REMARKS/DETAIL	SUPPLIER
BASE BID	10	N.A.	EXISTING CONCRETE PAVING TO REMAIN - PROTECT IN PLACE	N.A.	N.A.
BASE BID	11	3	CONSTRUCT HANDICAP RAMP	CITY OF RIVERSIDE STD. DWG. #304	N.A.
BASE BID	12	N.A.	EXISTING CONCRETE CURB TO REMAIN - PROTECT IN PLACE	N.A.	N.A.
BASE BID	13	L.S.	CONSTRUCT CONCRETE WALL W/ IRON FENCE	DETAIL 'E', SHEET CD-1	N.A.
BASE BID	14	4	INSTALL HANDICAP PARKING STALL	DETAIL 'F', SHEET CD-1	N.A.
BASE BID	15	1	EXISTING ELECTRIC VAULT TO REMAIN - PROTECT IN PLACE	N.A.	N.A.
BASE BID	16	L.S.	CONSTRUCT CONCRETE STAIRS	DETAIL 'G', SHEET CD-1	N.A.
BASE BID	17	2	CONSTRUCT IRON GATE	DETAIL 'E', SHEET CD-1	N.A.
BASE BID	18	N.A.	NEW BUILDING PER ARCHITECTURAL PLANS	N.A.	N.A.

BID STATUS	SYM.	QTY.	DESCRIPTION	REMARKS/DETAIL	SUPPLIER
BASE BID	19	L.S.	CONSTRUCT IRON FENCE	DETAIL 'E', SHEET CD-1	N.A.
BASE BID	20	L.S.	INSTALL SCORE JOINT	DETAIL 'D', SHEET CD-1	N.A.
BASE BID	21	N.A.	EXISTING PARKING LOT	N.A.	N.A.
BASE BID	22	8	INSTALL PARKING LOT STRIPING PER SPECIFICATIONS	N.A.	N.A.
BASE BID	23	5	INSTALL HANDICAP PARKING SIGNS	DETAIL 'J', SHEET CD-1	N.A.
BASE BID	24	N.A.	NEW GAZEBO & WALLS PER ARCHITECTURAL PLANS	N.A.	N.A.
BASE BID	25	L.S.	CONSTRUCT CONCRETE CURB	CITY OF RIVERSIDE STD. DWG. #200 - TYPE II	N.A.
BASE BID	26	2	EXISTING LIGHT TO REMAIN - PROTECT IN PLACE	N.A.	N.A.
BASE BID	27	L.S.	INSTALL ASPHALT SLURRY SEAL PER SPECIFICATIONS	N.A.	N.A.

RHA LANDSCAPE ARCHITECTS PLANNERS INC.
3612 MISSION INN AVE
RIVERSIDE, CALIFORNIA
92501
LIC. #1512
PH. (909) 781-1930
FAX (909) 686-8091

CLIENT:
CITY OF RIVERSIDE
PARK AND REC. DEPARTMENT
3900 MAIN ST.
RIVERSIDE, CA 92501

PROJECT:
WHITE PARK
CITY OF RIVERSIDE
PARK and RECREATION OFFICES

© R.H.A. LANDSCAPE ARCHITECTS - PLANNERS, INC. 2000
These plans are not to be reproduced, changed or copied in any form or manner whatsoever nor are they to be assigned to any third party without first obtaining the express written permission.

REVISIONS	DATE	BY
1 PLAN CHECK	5/5/00	

REGISTERED LANDSCAPE ARCHITECT
ADOLPH HLUBIK NO. 1512
Signature
7/21/00
Date
STATE OF CALIFORNIA

SHEET TITLE
CONSTUCTION PLAN

DESIGNED	DG
DRAWN	DG
CHECKED	
DATE	4/21/00
SCALE	1" = 10'
JOB NO.	9905

SHEET
C-2
OF 7 SHEETS

FILE NAME: G:\PLANFILES\9905\AUTOCAD\CD\9905CP2.DWG

PLOT DATE: 7-25-00

A MOW CURB

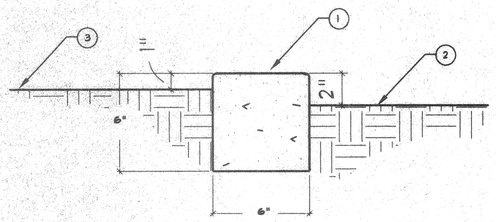

1. CONCRETE MOW STRIP
   NATURAL GREY.
   SMOOTH TROWEL FINISH
   1/4" RADIUS TO ALL EDGES

   INSTALL 1/2" PREFORMED EXPANSION JOINTS @ 15' O/C MAX. AND @ BEGINNING & END OF RADIUS
2. FINISH GRADE AT GROUND COVER AREAS 2" BELOW TOP OF MOW STRIP
3. FINISH GRADE AT TURF AREAS 1" BELOW TOP OF MOW STRIP

B PLANTER WALL

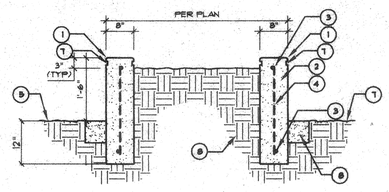

NOTE: PAINT ALL EXPOSED CONCRETE WALL W/ ONE COAT OF "VITROCHEM" ANTI-GRAFFITI COATING.

1. 3/4" RADIUS EDGE (ALL EDGES)
2. POUR IN PLACE CONCRETE WALL (2800 PSI) MEDIUM SAND BLAST ALL EXPOSED CONCRETE WALL
3. #4 REBAR CONTINUOUS
4. #4 REBAR @ 24" O.C.
5. FINISH GRADE
6. PLANTER MIX BACKFILL AND/OR COMPACTED SUB-GRADE
7. 1" WIDE X 1/2" DEEP REVEAL
8. CONCRETE MOW CURB PER DETAIL 'A', THIS SHEET

C CONCRETE SEAT WALL

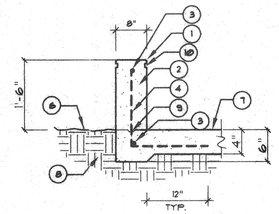

NOTE: PAINT ALL EXPOSED CONCRETE WALL W/ ONE COAT OF "VITROCHEM" ANTI-GRAFFITI COATING.

1. 3/4" RADIUS EDGE (ALL EDGES)
2. POUR IN PLACE CONCRETE WALL (2800 PSI) MEDIUM SAND BLAST ALL EXPOSED CONCRETE WALL
3. #4 REBAR CONTINUOUS
4. #4 REBAR @ 24" O.C.
6. FINISH GRADE
7. CONCRETE PAVING PER PLAN
8. PLANTER MIX BACKFILL AND/OR COMPACTED SUB-GRADE
9. 2"X4" KEY
10. 1" WIDE X 1/2" DEEP REVEAL

D CONCRETE PAVING

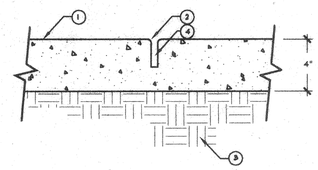

1. CONCRETE PAVING FINISH/COLOR PER PLAN
2. 1/4" RADIUS TROWELED EDGE
3. 90% COMPACTED SUBGRADE PER SOILS REPORT
4. AFTER PRELIMINARY TROWELING, THE CONCRETE SHALL BE PARTED W/ A STRAIGHT EDGE TO A DEPTH OF 1/2 OF THE CONCRETE THICKNESS

E WALL W/ FENCE AND GATE

1. 3/8" WIDE X 1" HIGH STEEL RAIL
2. 3" SQUARE STEEL POST @ 5' O.C. (TYP.). SET POSTS PRIOR TO POURING CONCRETE WALL.
3. 3/4" SQUARE STEEL PICKETS @4"O.C.
4. 6" THICK CONCRETE WALL PER PLAN
5. CONCRETE PAVING PER PLAN
7. 4" SQUARE STEEL POST. SET POSTS PRIOR TO POURING CONCRETE.
8. DRILL 1"DIA HOLE INTO POST TO ACCEPT STEEL DEADBOLT.
9. 6" HIGH X 4" WIDE STEEL PLATES ON BOTH SIDES OF PICKETS. INSTALL DEADBOLT MECHANISM (KEYED BOTH SIDES). COORDINATE DEADBOLT MANUFACTURER & KEYING WITH CITY PRIOR TO INSTALLATION.

   ON WEST GATE, "NO KNOWLEDGE" HARDWARE SHALL BE INSTALLED INSTEAD OF THE DEADBOLT AND STEEL PLATES. REFER TO ARCHITECTURAL PLANS FOR HARDWARE SPECIFICATION. (NO DOUBLE DEADBOLTS)
10. 1" THICK STEEL "RAINCROSS" PER DETAIL THIS SHEET
11. 3/8"SQUARE STEEL PICKET.
12. 4" HEAVY DUTY HINGE. SUBMIT CATALOG CUT FOR APPROVAL PRIOR TO INSTALLATION.

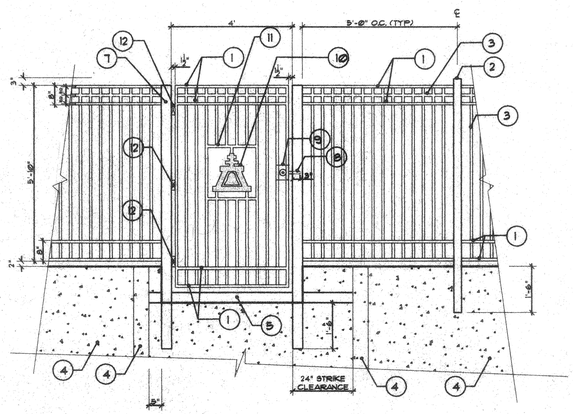

F H.C. PARKING STALL

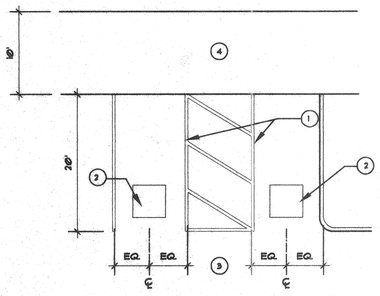

1. 4" LINES PAINTED BLUE
2. 3' SQ. INTERNATIONAL SYMBOL OF ACCESSIBILITY STENCILED IN BLUE PAINT.

   DISPLAY
3. 5' FOR STANDARD H/C STALL
   8' FOR VAN H/C STALL
   REFER TO PLAN FOR LOCATION

   NOTES:

   INSTALL STRIPING FOR PARKING STALLS AND OTHER MARKINGS AS SHOWN ON PLANS IN ACCORDANCE WITH STANDARD PUBLIC WORKS SPECIFICATIONS.

   STRIPING LAYOUT IS TYP. OF ALL STALLS.
4. CONCRETE PAVING PER PLAN

G CONCRETE STAIRS

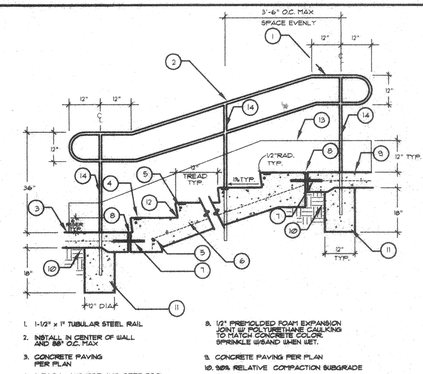

1. 1-1/2" x 1" TUBULAR STEEL RAIL
2. INSTALL IN CENTER OF WALL AND 88" O.C. MAX
3. CONCRETE PAVING PER PLAN
4. 6 EACH - 1/4" WIDE AND DEEP TOOL JOINT TO BEGIN 1" BEHIND NOSE. PAINT WITH BLACK CONCRETE PAINT (2 COATS). (EACH STEP)
5. #4 REBAR (CONT.) HOOK AT LANDING
6. #4 REBAR @24" O.C. CENTER IN SLAB
7. #4 DOWEL @24"O.C. (12"LONG) TOP & BOTTOM OF STAIRS WRAP W/ TAR PAPER ONE END
8. 1/2" PREFORMED FOAM EXPANSION JOINT W/ POLYURETHANE CAULKING TO MATCH CONCRETE COLOR. SPRINKLE W/SAND WHEN WET.
9. CONCRETE PAVING PER PLAN
10. 90% RELATIVE COMPACTION SUBGRADE
11. CONCRETE FOOTING
12. 12" BATTER (EACH STEP)
13. CONCRETE WALL PER ARCHITECTURAL PLANS
14. 1-1/2" x 1-1/2" TUBULAR STEEL POST SET POSTS PRIOR TO POURING CONCRETE

NOTES:
- ALL STEEL TO BE 14 GAUGE
- CONTINUOUS WELD ALL CONNECTIONS
- PAINT ALL EXPOSED STEEL W/ (1) PRIMER COAT AND (2) FINISH COATS BLACK SATIN

H RAINCROSS SYMBOL

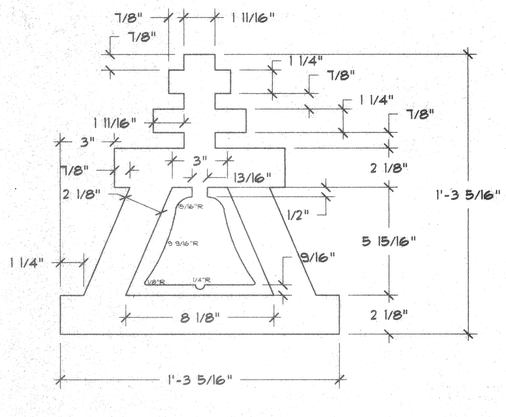

I TRASH ENCLOSURE

J HANDICAP PARKING SIGNS

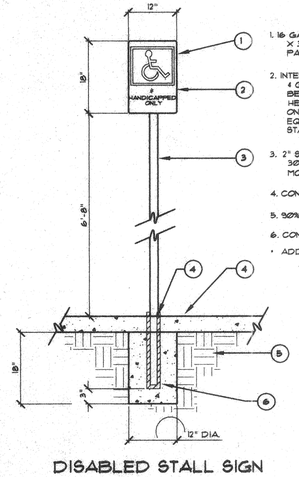

1. 16 GA. GALV. STL. SIGN W/3-1/8"DIA. X 3/4" SHEET METAL SCREWS. PAINT FASTENERS TO MATCH BACKGROUND.
2. INTERNATIONAL SYMBOL OF ACCESSIBILITY & GRAPHICS (WIDTH TO HEIGHT RATIO BETWEEN 3:5 & 1:1, STROKE WIDTH TO HEIGHT RATIO BETWEEN 1:5 & 1:10) ON BLUE BACKGROUND, BLUE SHALL BE EQUAL TO COLOR NO. 15090 IN FEDERAL STANDARD 595B.
3. 2" SQ. GALV. "QUICKPUNCH" POST W/ 36" ANCHOR SLEEVE (ALL POST MOUNTED SIGNS)
4. CONCRETE PAVING PER PLAN
5. 90% COMPACTED SUBGRAD
6. CONCRETE FOOTING
- ADD "VAN" ON VAN STALLS

DISABLED STALL SIGN

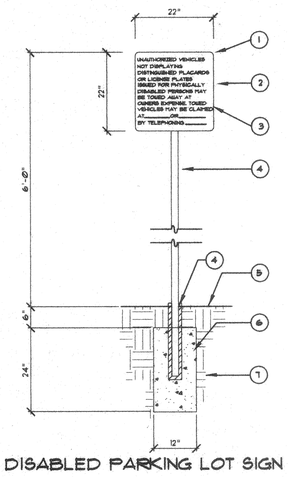

1. 1" RAD. TYP.
2. 1/4" THICK STEEL SIGN. PAINT DARK GREEN W/ WHITE LETTERS ATTACH TO POST W/ (2) 3/8" DIA. CARRIAGE BOLTS.
3. 1" LETTERS (HELVETICA BOLD)
4. 2" SQ. GALV. "QUICKPUNCH" POST W/ 36" ANCHOR SLEEVE (ALL POST MOUNTED SIGNS)
5. FINISH GRADE
6. CONCRETE FOOTING
7. 90% COMPACTED SUBGRADE

DISABLED PARKING LOT SIGN

REGISTERED LANDSCAPE ARCHITECT RANDOLPH HLUBIK NO. 1324 Signature 8.9.00 Date STATE OF CALIFORNIA

RHA LANDSCAPE ARCHITECTS PLANNERS INC
3612 MISSION INN AVE
RIVERSIDE, CALIFORNIA 92501
LIC. #1512
PH. (909) 781-1930
FAX (909) 686-8091

CLIENT:
CITY OF RIVERSIDE
PARK AND REC. DEPARTMENT
3900 MAIN ST.
RIVERSIDE, CA 92501

PROJECT:
WHITE PARK
CITY OF RIVERSIDE
PARK and RECREATION OFFICES

REVISIONS	DATE	BY
PLAN CHECK	9/1/00	

REGISTERED LANDSCAPE ARCHITECT RANDOLPH HLUBIK NO. 1324 Signature 7/31/01 Date STATE OF CALIFORNIA

SHEET TITLE
CONSTRUCTION DETAILS

DESIGNED	DG
DRAWN	DG/CA
CHECKED	
DATE	5/31/00
SCALE	SEE PLAN
JOB NO.	9905

SHEET
CD-1
OF 1 SHEETS

PLOT DATE: 7-25-00

FILE NAME: G:\PUBLIC\RHA\WORD\AUTOCAD\DRAWINGS\CD-1.DWG

© R.H.A. Landscape Architects - Planners, Inc. - This drawing is the copyright property of R.H.A. Landscape Architects - Planners, Inc. and is not to be used in any form on any other project without written authorization from R.H.A. Landscape Architects - Planners, Inc.

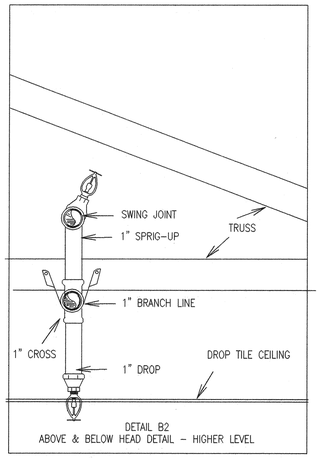

DETAIL B2
ABOVE & BELOW HEAD DETAIL – HIGHER LEVEL

SHEET INDEX

SHEET F–0	DETAIL B2 SECTION A GENERAL NOTES
SHEET F–1	RISER DETAIL PLOT PLAN DETECTOR CHECK DETAIL
SHEET F–2	FIRST FLOOR PIPING PLAN MATERIALS DESCRIPTION HEAD SPACING RULES
SHEET F3	FIRST FLOOR REFLECTED CEILING PLAN
SHEET F–4	HIGH LEVEL PIPING PLAN HEAD DETAIL HANGER DETAIL HYDRAULIC CALCULATIONS SUMMARY FLOW TEST INFORMATION SAMPLE PLACARD MATERIALS DESCRIPTION (HEAD ALLOCATION)
SHEET F–5	HIGH LEVEL REFLECTED CEILING PLAN
SHEET F–7	PARAPET PIPING PLAN

GENERAL NOTES

a. This sprinkler system shall be designed and installed in accordance with N.F.P.A.13 (light hazard), and the Riverside City Fire Department.

b. Only listed and approved devices or materials shall be in the system (except hangers, tanks and pumps).

c. Only new, listed sprinklers shall be installed.

d. Every sprinkler system shall be field tested and inspected at both the rough plumbing and final inspection, prior to occupancy. The jurisdictional fire prevention office shall be notified a minimum of two working days in advance of the requested inspection.

e. All systems shall be tested for leakage at 200 psi. for 2 hours .

f. All systems shall have an underground flush completed prior to connecting the underground piping to the overhead.

g. At least six spare sprinklers of each type, temperature rating, and orifice size, used in the system shall be located at the maim riser. A sprinkler wrench shall also be located at the riser.

h. All valves shall have a permanently affixed sign indicating its function.

i. Pipe shall be hung from structural members.

j. The spacing and location of sprinklers shall conform with N.F.P.A. Pamphlet #13 (1996 edition) Section 4–6.2. this building is constructed entirely of wooden trusses, and classified combustible unobstructed. Maximum head spacing is 225 sq. ft.

k. Alarms shall be of sufficient intensity to be clearly audible in all rooms over background noise levels with all intervening doors closed.

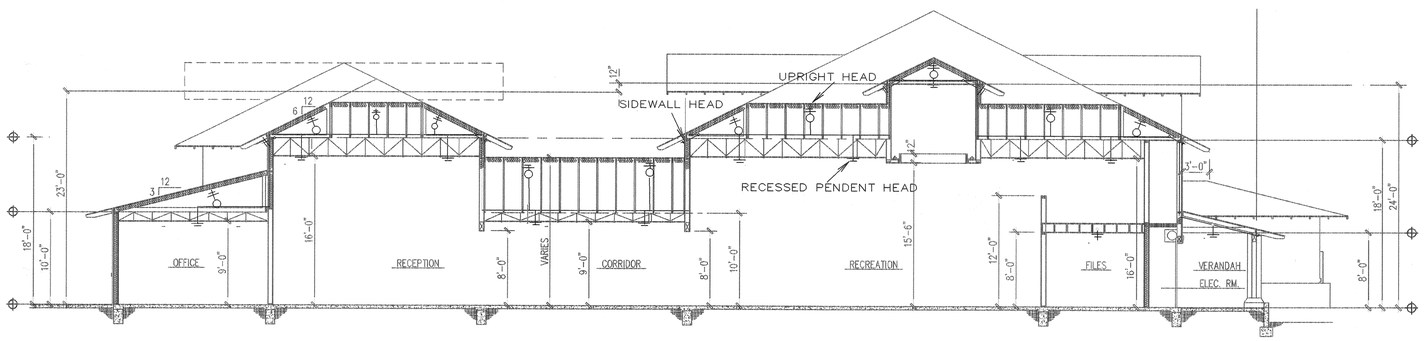

SECTION A
SCALE

AS–BUILT

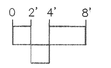

SCALE: 1/8" =1'

LICENSED CONTRACTOR
PRO-WEST FIRE PROTECTION
LIC. NUMBER
C-16 420 693
STATE OF CALIFORNIA

SECTIONS & DETAILS
PARK & RECREATION OFFICES
WHITE PARK /
3936 CHESTNUT STREET
RIVERSIDE, CA. 92501

PRO-WEST FIRE PROTECTION
P.O. BOX 400661, HESPERIA, CA. * * PHONE/FAX (760) 244-3909
EMAIL pw@mscomm.com * * CONT. LIC. # C-16 420693

FILE:	F–0–ABS
REV. DATE	3/4/2001 10/10/2001 5/21/2001
DATE	2/2/2001
ENG.	J HESTER
SCALE	1/8"= 1'
SHEET NO.	F0 OF 7

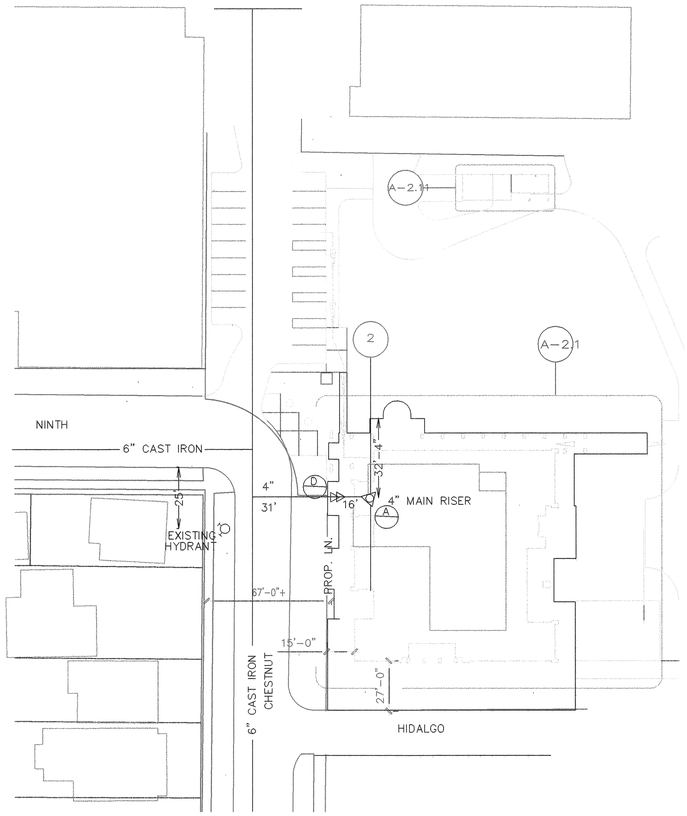

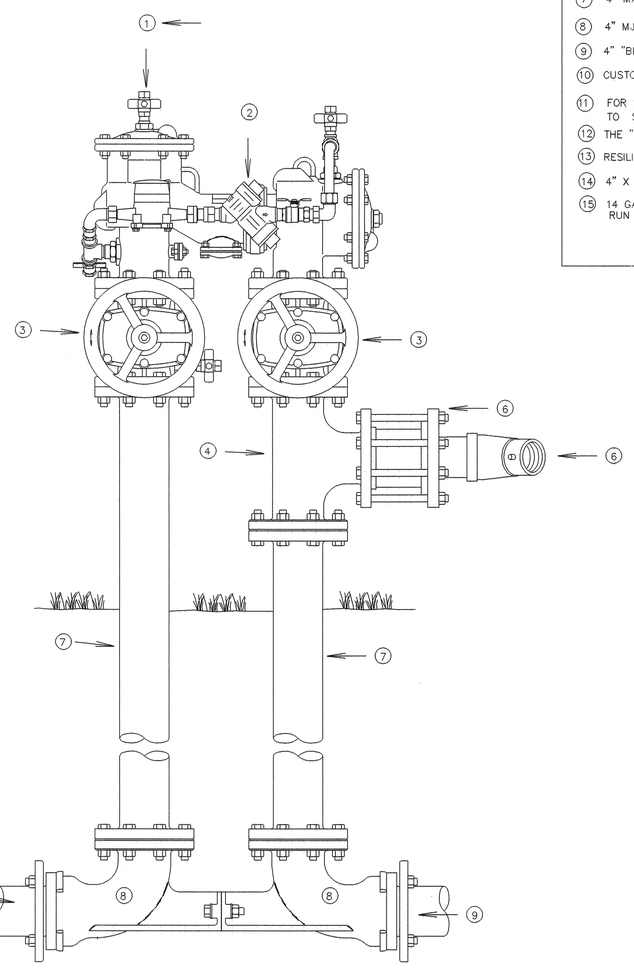

1. 4" DETECTOR CHECK
2. BY=PASS METER WITH TRIM
3. 4" GATE VALVE
4. 4" FLANGED TEE
5. SIAMESE FIRE DEPARTMENT CONNECTION
6. 4" WAFER CHECK VALVE
7. 4" MALLEABLE IRON FLANGED SPOOL
8. 4" MJ X FLANGE 90 DEG ELL
9. 4" "BLUE BRUTE" C900 PIPE
10. CUSTOMER TO PAINT ALL ABOVE GRADE PIPING AND DETECTOR ASSEMBLY'
11. FOR 10" DETECTOR ASSEMBLY, INSTALL 12" LATERAL AND PIPING. CUSTOMER TO SUPPLY 12" X 10" FLANGED REDUCERS ON BOTH SIDES OF DETECTOR ASSEMBLY.
12. THE "UNIT" MUST BE INSPECTED AND TEST IMMEDIATELY AFTER INSTALLATION.
13. RESILIENT WEDGE GATE VALVE
14. 4" X 6" TAPPING SLEEVE
15. 14 GA. COATED COPPER LOCATING WIRE. CONNECT TO WATER MAIN LOCATING WIRE, RUN ALONG FIRE SERVICE LATERAL, WRAP AROUND FIRST VALVE.

DETAIL D FEBCO MODEL 876V DOUBLE DETECTOR CHECK

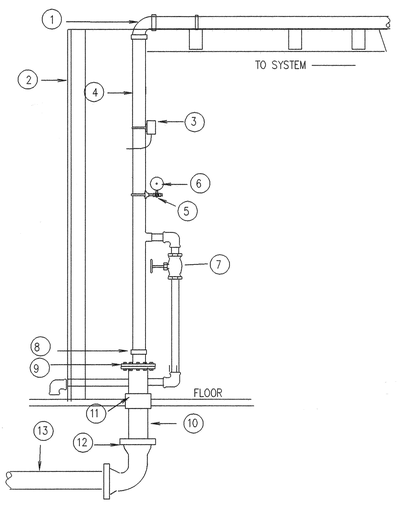

LEGEND

1. 2 1/2" GROOVED CPVC 90 DEG ELL
2. EXTERIOR WALL
3. 2" 1/2 MONITORED FLOW SWITCH
4. 2 1/2" STEEL PIPE
5. 1/4" S,O,G,V.
6. PRESSURE GAGE
7. 1 1/4" MAIN DRAIN VALVE
8. 4" X 2 1/2" REDUCING GROOVE COUPLING
9. 4" COMPANION FLANGE
10. 4" MALLEABLE FLANGE SPIGOT PIECE
11. BUFFER BETWEEN PIPE AND FLOOR
12. 4" MECHANICAL JOINT 90
13. 4" PVC C900 CLASS 200 PIPE

DETAIL A, MAIN RISER & UNDERGROUND SUPPLY

AS-BUILT

N

LICENSED CONTRACTOR FIRE PROTECTION LIC. NUMBER C-16 420 693 STATE OF CALIFORNIA

PLOT PLAN
PARK & RECREATION OFFICES
WHITE PARK
3936 CHESTNUT STREET
RIVERSIDE, CA. 92501

P.O. BO 400661
HESPERIA, CA. 92340
PHONE #: (760) 244-3909
CONT. LIC. #: C16-420693

PRO-WEST FIRE PROTECTION

REV. DATE	10/10/2001
DATE	2/2/2001
ENG.	J HESTER
SCALE	NO SCALE
SHEET NO.	F1 OF 7

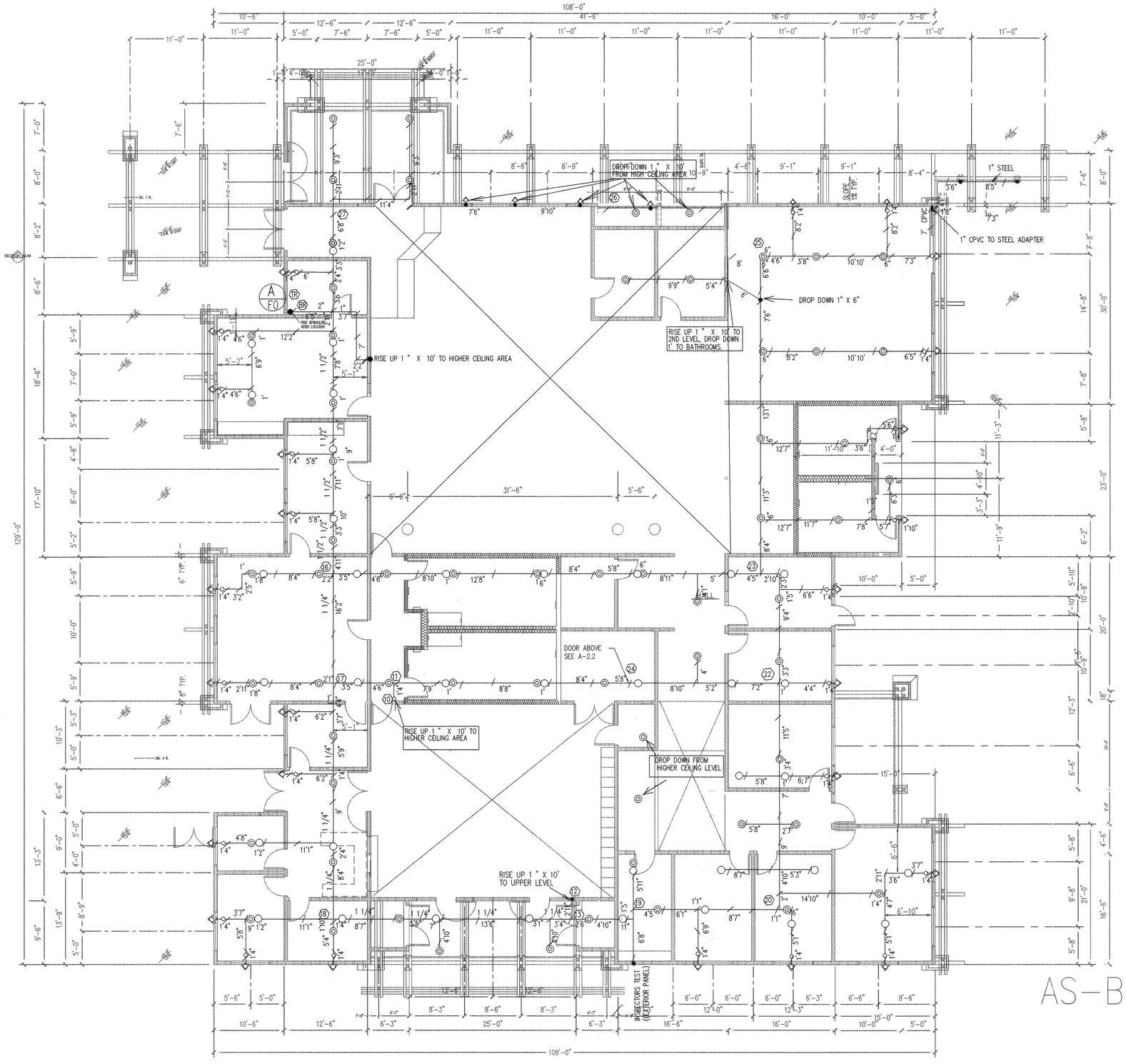

AS-BUILT

HANGER SPACING RULES FOR 1" CPVC

1. MAXIMUM SPACING BETWEEN 1" HANGERS = 6'
2. MAXIMUM SPACING FROM CHANGE IN DIRECTION = 1'
3. MAXIMUM SPACING FROM SPRINKLER HEAD (INLINE TEE) = 5"
4. MAXIMUM SPACING FROM SPRINKLER HEAD (END LINE) =96"

HEAD SPACING RULES

1. MAXIMUM SPACING BETWEEN HEADS = 15
2. MINIMUM SPACING BETWEEN HEADS = 6'
3. MAXIMUM SPACING OFF WALLS = 7'6"
4. MINIMUM SPACING FROM WALLS = 4"

SYMBOLS

- HYDRAULIC CALCULATION NODE
- UPRIGHT HEAD
- PENDENT HEAD
- PENDENT HEAD OFF OF 1" DROP
- SIDEWALL HEAD
- GROOVED COUPLING
- RISE-UP
- PENDENT HEAD OFF OF 4" DROP MAIN RISER
- HANGER LOCATION
- SWAY BRACE
- 9'6" PIPE DIMENSION
- 9'6" STRUCTURAL DIMENSION
- LINE NUMBER

N

LICENSED CONTRACTOR — PRO-WEST FIRE PROTECTION — LIC. NUMBER C-16 420 693 — STATE OF CALIFORNIA

FIRST FLOOR PIPING PLAN
PARK & RECREATION OFFICES
WHITE PARK
3936 CHESTNUT STREET
RIVERSIDE, CA. 92501

PRO-WEST FIRE PROTECTION
P.O. BOX 400661, HESPERIA, CA. * PHONE/FAX (760) 244-3909
EMAIL pw@mscomm.com * CONT. LIC. # C-16 420693

FILE:	1ST FLOOR PIPE-ABS
REV. DATE	5/10/2001 10/10/2001
DATE	2/2/2001
ENG.	J HESTER
SCALE	1/8"= 1'
SHEET NO.	F2 OF 7

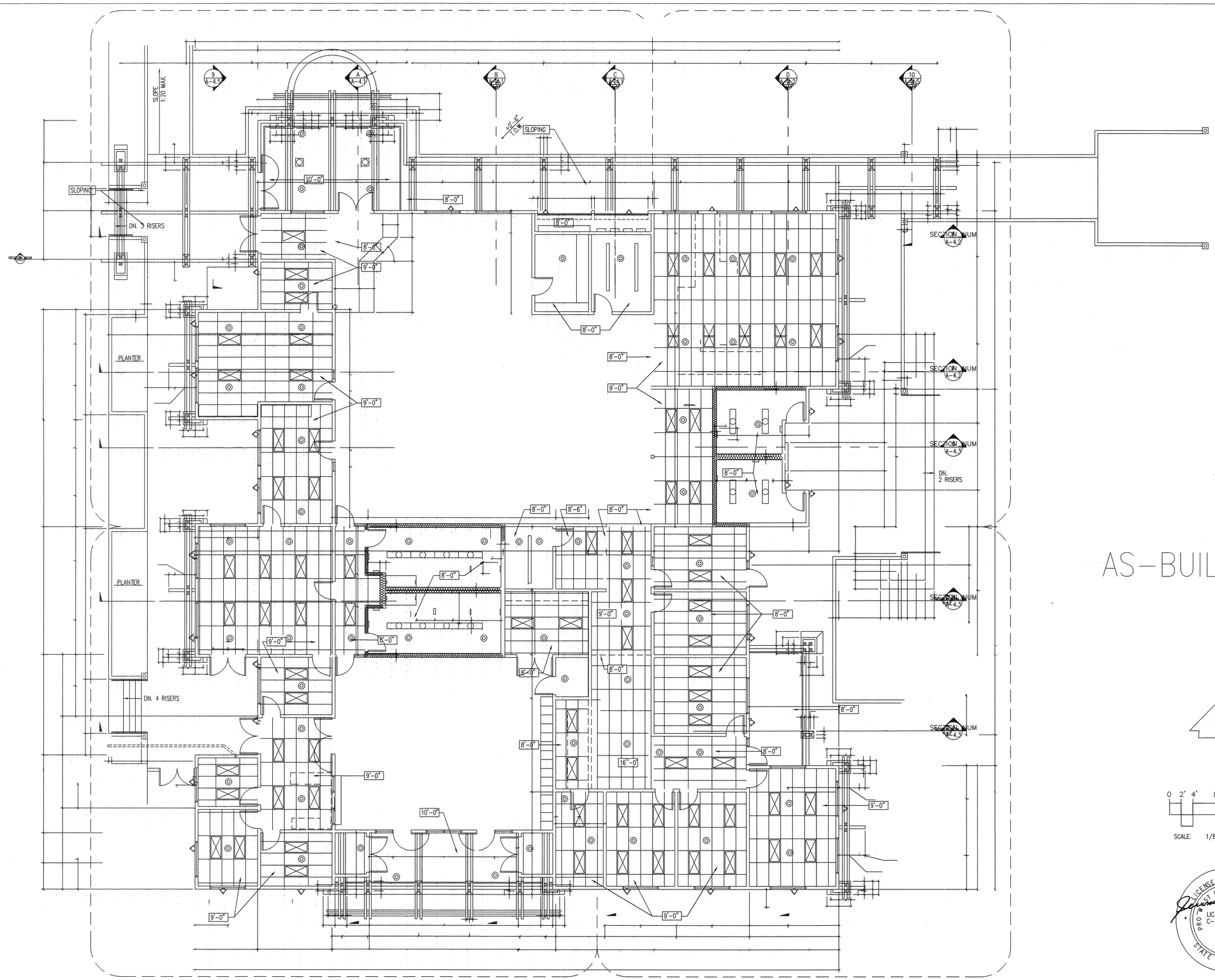

FIRST FLOOR REFLECTED CEILING
PARK & RECREATION OFFICES
WHITE PARK
3936 CHESTNUT STREET
RIVERSIDE, CA. 92501

PRO-WEST FIRE PROTECTION
P.O. BOX 400661, HESPERIA, CA. * PHONE/FAX (760) 244-3909
EMAIL pw@mscomm.com * CONT. LIC. # C-16 420693

LICENSED CONTRACTOR
PRO-WEST FIRE PROTECTION
LIC. NUMBER C-16 420 693
STATE OF CALIFORNIA

FILE: 1ST FLOOR REF-ABS	
REV. DATE	5/10/2001 10/10/2001
DATE	2/2/2001
ENG.	J HESTER
SCALE	1/8"= 1'
SHEET NO.	F3 OF 7

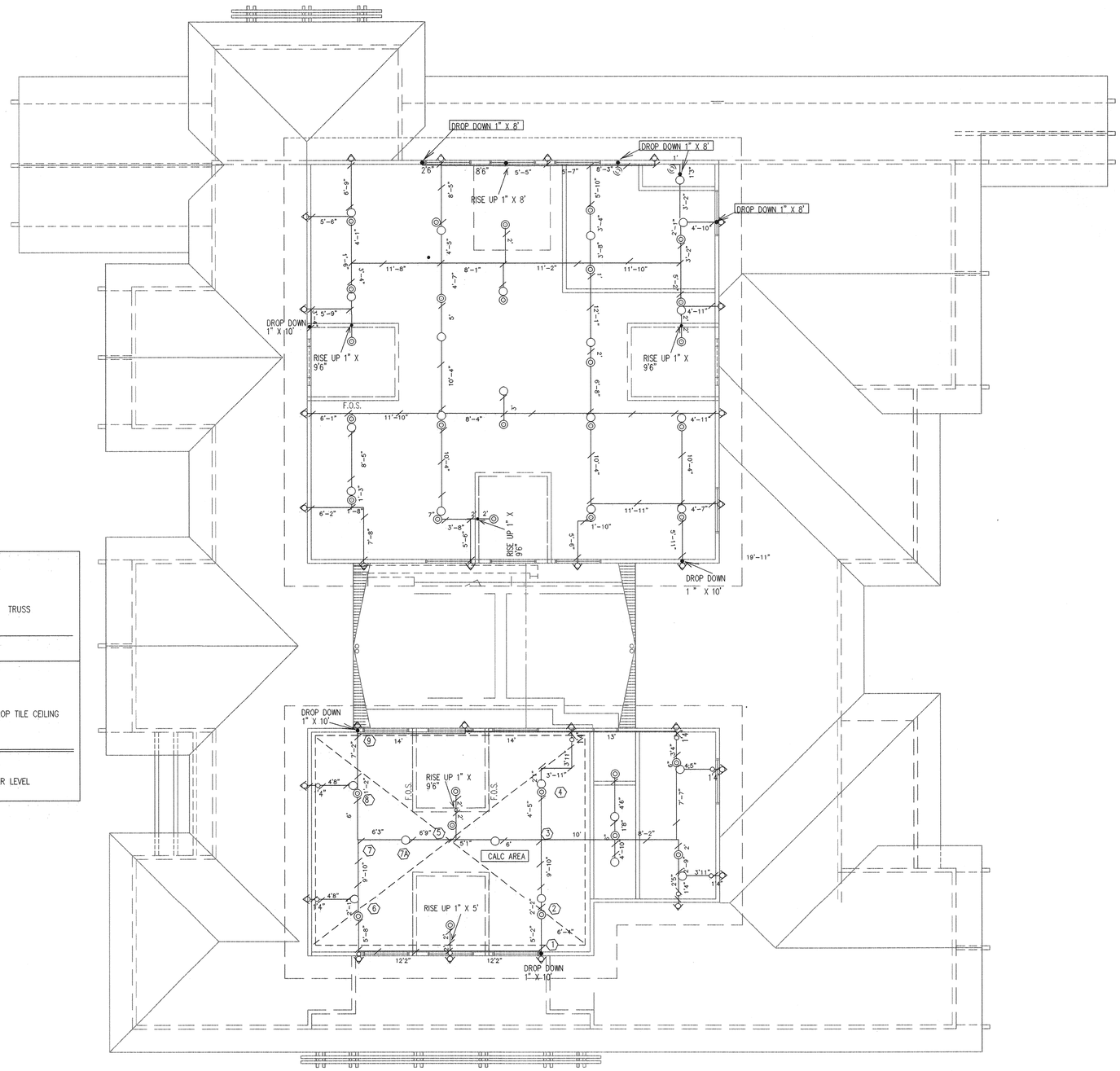

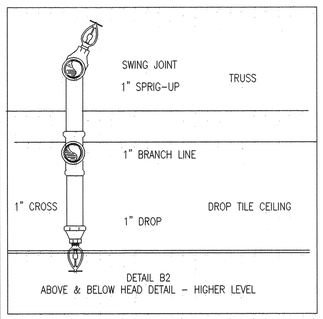

DETAIL B2
ABOVE & BELOW HEAD DETAIL – HIGHER LEVEL

FLOW TEST INFORMATION:
STATIC: 53 PSI
RESIDUAL: 49 PSI
FLOWING: 1100 GPM
LOCATION: AT SITE
DATE: 12-22-2000
TIME: 4:00 PM
TESTED BY: RIVERSIDE WATER DEPARTMENT

CALC SUMMARY:
OCCUPANCY CLASS: 13, LIGHT HAZARD
DENSITY: .10 GPM PER SQ. FT.
AREA OF APPLICATION 1050 SQ. FT.
COVERAGE PER SPRINKLER: 196 SQ. FT.
NUMBER OF SPRINKLERS CALCULATED: 5
TOTAL SPRINKLER WATER REQUIRED: 97 GPM
TOTAL REQUIRED (INCLUDING HYDRANT FLOW: 197 GPM
FLOW AND PRESSURE AT BASE OF RISER: 97 GPM @ 49.1 PSI
SPRINKLER ORIFICE SIZE: 1/2
K-FACTOR: 5.5

CALCULATION SUMMARY

HYDRAULIC SYSTEM

THIS BUILDING IS PROTECTED BY A HYDRAULICALLY DESIGNED AUTOMATIC SPRINKLER SYSTEM.

LOCATION: 3936 CHESTNUT ST.RIVERSIDE, CA.

NUMBER OF SPRINKLERS CALCED: 5

BASIS OF DESIGN
DENSITY: .10
BASIS OF DESIGN: 1050 SQ. FT.

SYSTEM DEMAND
GPM DISCHARGE: 97 GPM
RESIDUAL PRESSURE AT THE BASE OF RISER: 49.1 PSI

PRO-WEST FIRE PROTECTION – HESPERIA, CA.

SAMPLE PLACARD

MATERIAL DESCRIPTION

PIPE: 1" CPVC UNLESS OTHERWISE NOTED
MAINS = BLAZEMASTER
MAIN RISER: 2 1/2" EDDY FLOW
STYLE 100 LT WT GROOVED CPLNG, AND STYLE 500
LOCKING GROOVED CPLNG.

HEADS:
BELOW CEILINGS: VIKING 155 DEG QUICK RESPONSE SSP = 92
ABOVE CEILINGS: VIKING 200 DEG QUICK RESPONSE SSU = 53
BELOW EAVES: VIKING 155 DEG QUICK RESPONSE HORIZONTAL SIDEWALL = 53

HANGERS: TOLCO #23 PIPE STRAPS

FLOW SWITCH = POTTER ELECTRIC
DRAIN VALVES: GLOBE

HEAD SPACING RULES

1. MAXIMUM SPACING BETWEEN HEADS = 15
2. MINIMUM SPACING BETWEEN HEADS = 6'
3. MAXIMUM SPACING OFF WALLS = 7'6"
4. MINIMUM SPACING FROM WALLS = 4"

SYMBOLS

- HYDRAULIC CALCULATION NODE
- UPRIGHT HEAD
- PENDENT HEAD
- PENDENT HEAD OFF OF 1" DROP
- SIDEWALL HEAD
- GROOVED COUPLING
- RISE-UP
- PENDENT HEAD OFF OF 2" DROP MAIN RISER
- HANGER LOCATION
- SWAY BRACE
- 9'6" PIPE DIMENSION
- 9'6" STRUCTURAL DIMENSION
- LINE NUMBER

AS-BUILT

0 2' 4' 8'

SCALE: 1/8" =1'

LICENSED CONTRACTOR
PRO-WEST FIRE PROTECTION
LIC. NUMBER C-16 420 693
STATE OF CALIFORNIA

HIGHER LEVEL PIPING PLAN
PARK & RECRRREATION OFFICES
WHITE PARK
3936 CHESTNUT STREET
RIVERSIDE, CA. 92501

PRO-WEST FIRE PROTECTION

FILE: HIGH LEV PIPE-ABS
REV. DATE 4/1/2001
10/15/2001 5/10/2001
10/10/2001
DATE 2/6/2001
ENG. J HESTER
SCALE 1/8"= 1'
SHEET NO.
F4 OF 7

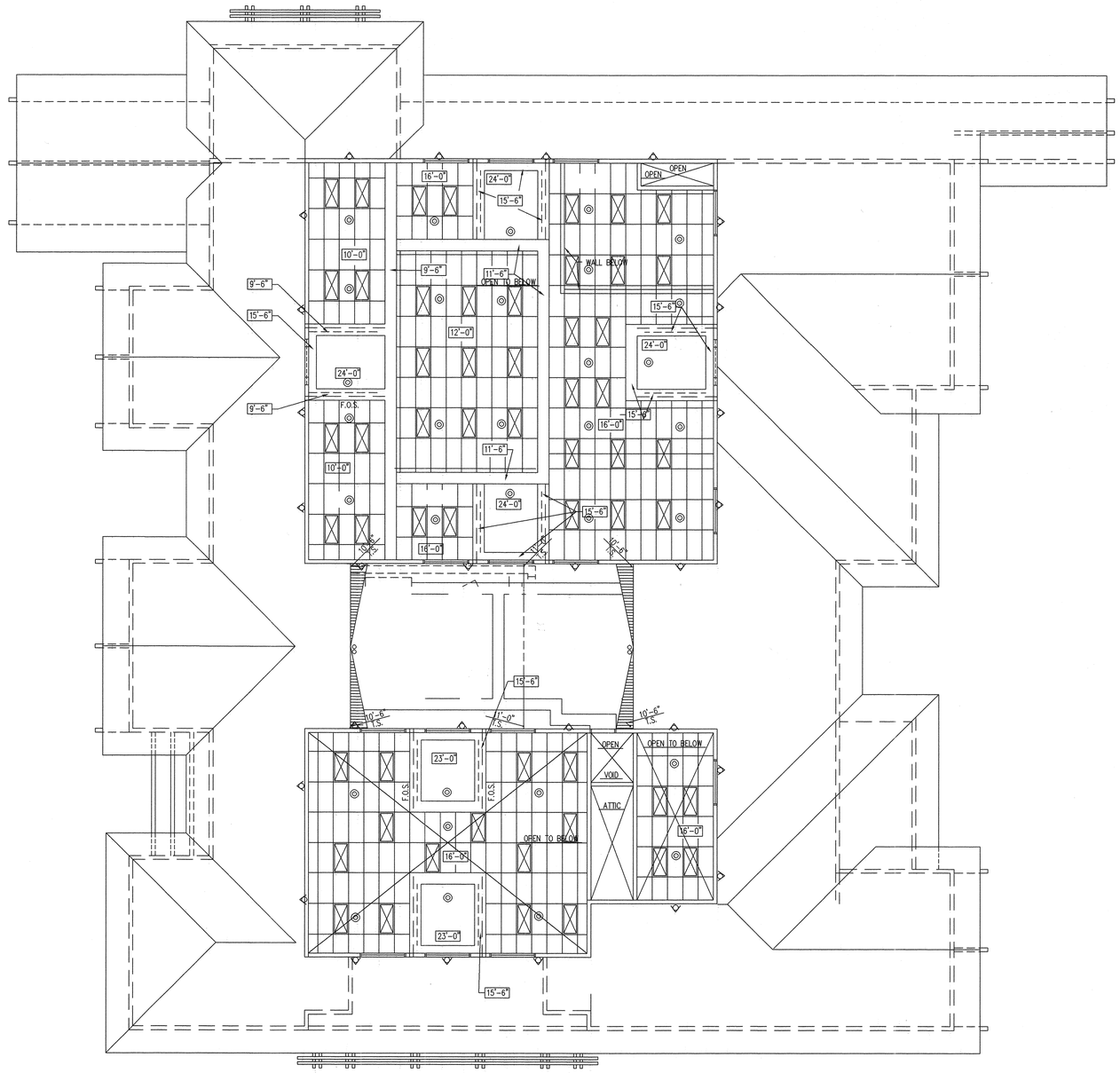

AS-BUILT

0 2' 4' 8'

SCALE: 1/8" =1'

LICENSED CONTRACTOR
FIRE PROTECTION
LIC. NUMBER
C-16 420 693
STATE OF CALIFORNIA

F5 OF 7
Fire

1/8 = 1"

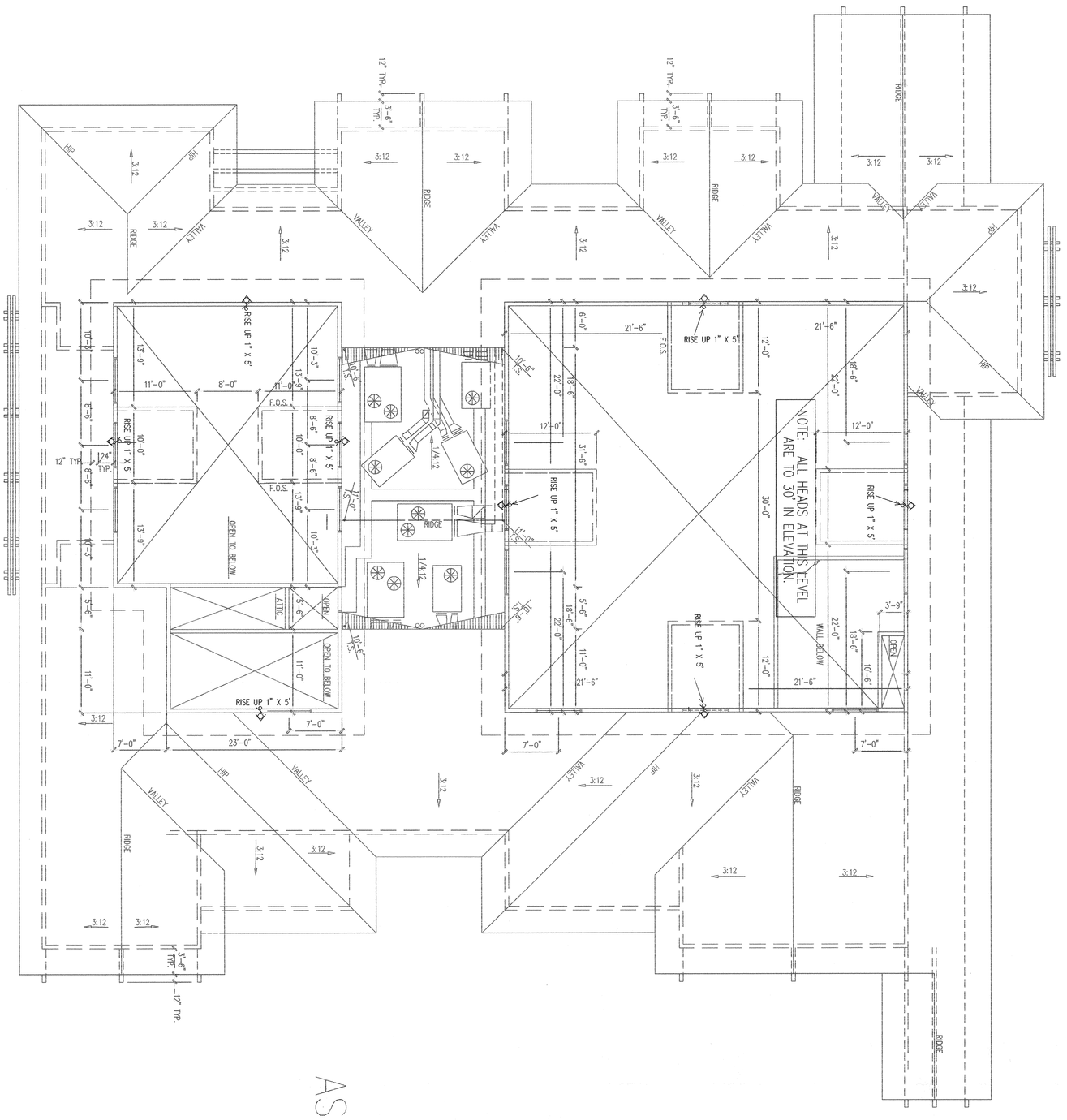

AS-BUILT

LICENSED FIRE PROTECTION CONTRACTOR
PRO-WEST FIRE PROTECTION INC. NUMBER C-16 420 693
STATE OF CALIFORNIA

PRO-WEST FIRE PROTECTION

P.O. BOX 400661, HESPERIA, CA. * PHONE/FAX (760) 244-3909
EMAIL pw@mscomm.com * CONT. LIC. # C-16 420693

PARAPET PIPING PLAN
PARK & RECRRREATION OFFICES
WHITE PARK
3936 CHESTNUT STREET
RIVERSIDE, CA. 92501

FILE NAME PARAPET-ABS
REV. DATE
DATE 10/10/2001
ENG. J HESTER
SCALE 1/8"= 1'
SHEET NO. F6 OF 7

APPLICABLE CODES

BASIC CONSTRUCTION AND DESIGN REQUIREMENTS AND CODE COMPLIANCE
CCR CALIFORNIA CODE OF REGULATIONS
TITLE 19 PUBLIC SAFETY- STATE FIRE MARSHALL / T-24 CALIFRONIA ADMENDMENT CODE

1998 CALIFORNIA BUILDING CODES (CBC)
1998 CALIFORNIA ELECTRICAL CODE (CEC)
1998 CALIFORNIA MECHANICAL CODE (CMC)
1998 CALIFORNIA FIRE CODE (CFC)
1998 CALIFRONIA BUILDING STANDARDS CODE
1996 NFPA 72 WITH CALIFORNIA AMENDMENTS

GENERAL NOTES:

1) A DIGITAL ALARM COMMUNICATOR TRANSMITTER(DACT)NFPA72 SEC.4-2.3.2.1.1

2) DACTS MUST BE CONNECTED UPSTREAM OF ANY PRIVATE TELEPHONE SYSTEM AT THE PROTECTED PREMISES. CONNECTION MUST BE MADE TO A LOOP START TELEPHONE CIRCUIT.

3) FAILURE OF EITHER PHONE LINE MUST BE ANNUNCIATED LOCALLY AND TRANSMITTED WITHIN 4 MINUTESOVER THE SECOND LINE(SEC.4-2.3.2.1.7) IF LONG DISTANCE SERVICE IS USED, THE SECOND NUMBER SHALL BE OF A DIFFERENT CARRIER, WHERE AVAILABLE(4-2.3.2.1.9)

4) A FIRE CONTROL PANEL / DACT IS INHERENTLY POWER LIMITED AND SIGNALING AND INITIATING CIRCUITS DO NOT REQUIRE OVER CURRENT PROTECTION.

5) DACT SHALL BE CONNECTED BEFORE CUSTOMER PROVIDE EQUIPMENT

6) THE DACT WILL BE PROGRAMMED TO INITIATE AND COMPLETE A TEST SIGNAL TRANSMISSION ONCE EVERY 24 HOURS.

7) CONSULT WITH THE OWNER AND/OR GENERAL CONTRACTOR FOR EXACT LOCATION OF THE FIRE CONTROL PANEL / TRANSPONDER PRIOR TO INSTALLATION.

8) INSTALLER SHALL COORDINATE ALL WORK WITH THE GENERAL CONTRACTOR AND ALL OTHER TRADES.

9) THE EQUIPMENT AND MATERIAL USED ARE STATE FIRE MARSHALL APPROVED FOR TRANSMISSION OF SIGNALS AS SET FORTH BY N.F.P.A. 72 STANDARD FOR SECURE CAPABILITIES 4-2.3.2.1.3 - 4-2.3.2.1.5 THROUGH 4-2.3.2.1.10

10) THE U.L. LISTED CENTRAL STATION MONITORING COMPANY IS: KING CENTRAL
11925 LOS NIETOS RD. SANTA FE SPRINGS
1800/576--0650 UL. No.S--3564

INSTALLATION:

1) THE ELECTRICAL CONTRACTOR WILL PROVIDE A 120 V.A.C. 15 AMPS DEDICATED CIRCUIT TO LOCATION OF FIRE CONTROL PANEL/ DACT.

2) DEDICATED CIRCUITS SHALL BE PROVIDED FOR ALL FACP AND ASSOCIATED PANELS

3) POWER LIMITED WIRING SHALL BE SEPARATED FROM NON-POWER LIMITED ELECTRIC LIGHT, AND CLASS 1 CIRCUITS. A MINIMUM OF 2 INCHES.

4) ALL CIRCUITS WILL BE IDENTIFIED AT JUNCTIONS AND AT TERMINATION BY MEANS OF A DURABLE AND VISIBLE LABEL.

5) THE CIRCUIT DISCONNECT SHALL BE ACCESSIBLE ONLY TO AUTHORIZED PERSONS, SHALL INCLUDE BREAKER LOCK-ON DEVICES AND CLEARLY MARKED- FIRE ALARM CIRCUIT CONTROL

6) ALL WIRING AND CABLING METHODS WILL COMPLY WITH N.F.P.A. 70-780-28, STANDARDS. BY WAY OF PROTECTING ALL WIRING WITHIN SEVEN (7) FEET FROM THE FINISHED FLOOR IN CONDUIT STUD-UP AND BY CONCEALING ALL WIRING IN WALLS, CEILING, AND PROTECTIVE BUILDING ELEMENTS.

7) PROVIDE PROTECTION FOR THE TRANSFORMER.

8) NO " T " TAPPING OF FIELD WIRING IS PERMISSIBLE IN SUPERVISED INITIATING (IDC) AND NOTIFICATION (NAC), SIGNALING (SLC) LINE CIRCUITS - OK

9) IF THE TRANSMITTER IS NOT LOCATED IN THE SAME ROOM AS THE TELCO EQUIPMENT BACKBOARD FIRE WIRE IS TO BE USED BETWEEN THE " D " MARK AND THE FIRE ALARM CONTROL PANEL EXCEPTION, IF CONDUIT IS PROVIDED FROM TELCO BACKBOARD TO TRANSMITTER LOCATION STANDARD (NO WIRE MAY BE USED).

10) REFER TO MANUFACTURES CUT SHEET/ INSTALLATION MANUAL FOR ADDITIONAL INFORMATION ON THE DEVICES.

WATER FLOW ALARM SERVICE

" THE WATER FLOW DEVICE SHOULD BE FIELD ADJUSTED SO THAT AN ALARM WILL BE INITIATED IN NO MORE THAN 90 SECONDS AFTER A SUSTAINED FLOW OF AT LEAST 10GPM (40 LIMIN) " N.F.P.A.72-5-72. (THE GENERALLY EXCEPTED NORMAL FOR MOST A.H.Js. IS BETWEEN 30 TO 45 SECONDS.)

WATER FLOW AND CONTROL VALVE SUPERVISION

" A SIGNAL INITIATING DEVICE AND ITS CIRCUITS SHALL BE DESIGNED AND INSTALLED SO THEY CANNOT BE READILY TAMPERED WITH OR REMOVED WITHOUT CAUSING A SUPERVISORY SIGNAL TO BE PRODUCED." SPRINKLER SYSTEM WATER FLOW ALARM AND INITIATING DEVICE AND THEIR CIRCUITS SHALL BE SO DESIGNED AND INSTALLED THAT THEY READILY TAMPERED WITH, OPENED OR REMOVED FROM CONNECTION TO THE COMPONENTS OF THE SPRINKLER SYSTEM, WITHOUT INITIATING A SIGNAL. THIS PROVISION SPECIFICALLY INCLUDES JUNCTION BOXES THAT HAVE BEEN INSTALLED ON THE OUTSIDE OF THE BUILDINGS TO FACILITATE ACCESS TO THE INITIATING DEVICE CIRCUIT. N.F.P.A.72 3-8.9.1, 3-8.9.3, 5-8.1 (TAMPER RESISTANT SCREWS ARE TO BE USED ON ALL CONDUIT AND CONDUIT DEVICE REQUIRING COVERS THAT ARE TO BE USED IN EXTERIOR APPLICATIONS).

CONTROL VALVE POSITION SUPERVISION

" THE OFF NORMAL SIGNAL SHALL BE OBTAINED DURING THE FIRST TWO REVOLUTIONS OF ITS NORMAL POSITION. THE OFF NORMAL SIGNAL SHALL NOT BE RESTORED AT ANY VALVE POSITION EXCEPT NORMAL". N.F.P.A. 72-5-10.1

NOTIFICATION MOUNTING

WALL MOUNTED APPLIANCES ONLY SHALL HAVE THEIR BOTTOMS AT HIGHTS ABOVE THE FINISH FLOORS OF NOT LESS THAN 80 INCHES (2m) AND NO GREATER THAN 96 INCHES(2.4m) PER NFPA-96, (SECTION 6-4.4, APPLIANCE LOCATION)

NOTIFICATION TO ACTIVATE UPON THE ALARM OF SMOKE DETECTOR, MANUAL PULL STATION /WATER FLOW SWITCH

PER "NFPA 96" SECTION 8-3.5.1, "CFC 96" SECTION 1003.3.2 "CBC 98" SECTION 904.3.2

SMOKE DETECTOR

SMOKE DETECTION ABOVE ALL CONTROL EQUIPMENT (CEILING MOUNT). WHERE THE INTENT IS TO PROTECT AGAINST A SPEGIFIC HAZARD, THE DETECTOR SHALL BE PERMITTED TO BE INSTALLED CLOSTER TO THE HAZARD IN A POSITION WHERE THE DETECTOR WILL READILY INTERCEPT THE HEAT. PER NFPA 72, 1-6.6 (1996)

INSTALLING CONTRACTOR SHALL INCLUDE ALARM VERIFICATION FOR SMOKE AND DUCT DETECTORS, TO MINIMIZE FALSE ALARMS.

MANUAL PULL STATION MOUNTING

EACH MANUAL FIRE ALARM BOX SHALL BE SECURELY MOUNTED, THE OPERABLE PART OF EACH MANUAL FIRE ALARM BOX SHALL BE NOT LESS THAN 3 1/2ft (42") AND NOT MORE THAN 4 1/2ft (54") ABOVE FINISH FLOOR LEVEL. PER NFPA-96, SECTION-8-3.1

MANUAL PULL STATION SHALL BE READILY ACCESSIBLE AND CLEAR OF ANY OBSTRUCTIONS ONE MANUAL PULL STATION SHALL BE PROVIDED FOR EARLIER FIRE DEPARTMENT NOTIFICATION. PER NFPA72 1996 SECTION 5-9.1.1, 5-9.1.2 CFC 1998 SECTION1003.3.2

SIGN AGE

1) MINIMUM 8 X 10 SIGN ON DOORS THAT CONTAIN THE F.A.C.P. TO INDICATE LOCATION OF PANEL.

2) ALL FIRE ALARM " J " BOXES AND COVERS ARE TO BE PAINTED RED AND LABELED " F.A. "

3) THE DEDICATED BRANCH CIRCUIT TO BE PAINTED RED AND LABELED " FIRE ALARM " AND PROVIDED WITH LOCKOUT.

4) BATTERIES ARE TO BE LABELED WITH THE MONTH AND YEAR OF INSTALLATION.

5) LOCATION OF THE AC CIRCUIT BREAKER IS TO BE LABELED ON THE INTERIOR OF THE F.A.C.P. DOOR.

6) RJ TELCO JACK COVERS ARE TO BE LABELED WITH THE PHONE NUMBER AND INDICATE WHETHER THE LINE IS THE PRIMARY OR THE SECONDARY LINE.

7) THERE IS TO BE SIGN AGE AT THE INSPECTORS TEST VALVE, RISER, AND SUPERVISORY DEVICE INDICATING THAT THE FIRE SPRINKLER SYSTEM IS BEING MONITORED.

8) THE LOCATION OF THE INSPECTORS TEST IS TO BE LABELED ON THE INTERIOR OF THE F.A.C.P. DOOR.

OTHER (PER APPLICABLE CODE AND LOCAL JURISDICTION)

1) AN OWNERS MANUAL AND RECORD DRAWINGS SHALL BE PROVIDED TO THE OWNER UPON COMPLETION AND FINAL ACCEPTANCE OF THE SYSTEM PER NFPA 96 SECTION 1-7.2.2

2) INSTALLER TO PROVIDE A DIGITAL AMP-METER TO VERIFY INSTALLATION DURING CITY FINAL INSPECTION

3) KEYS FOR ALL PANELS AND DEVICES REQUIRING RESETTING SHALL BE PROVIDED FOR THE KNOX BOX AT TIME OF TEST (IF KNOX BOX IS PROVIDED)

4) KEYS FOR FACP SHALL BE LABELED FACP KEYS FOR MANUAL PULL STATION SHALL BE LABELED MANUAL PULL

5) CONTRACTOR TO PROVIDE A PLACARD AT LEAST 20SQ IN ON OR NEAR THE CONTROL UNIT /ANNUN. AND INDICATING THE PRIME CONTRACTOR AND CENTRAL STATION

6) CONTRACTOR TO PROVIDE AT THE CONTROL PANEL THE RESET INSTRUCTION(FOR FIRE DEPT. USE ONLY) AT ANNUNCIATOR AND FACP LOCATION (IF APPLICABLE IN LOCAL JURISDICTION)

7) THIS SYSTEM SHALL BE UL CERTIFICATED AND A RECORD OF COMPLETION SHALL BE PLACED IN A RESILIENT ENCLOSURE ADJACENT TO THE FACP

8) ALL WIRING INSTALLATION IN METAL STUDS OR FRAMING SHALL BE PROVIDED WITH GROMMETS OR BUSHING UNLESS EMT OR RIGID CONDUIT IS INSTALLED.

9) ALL WIRING ABOVE T-BAR CEILINGS SHALL BE SUPPORTED (EVERY 4'-6") AT TOP OF BUILDING STRUCTURE EMT OR RIGID CONDUIT BY OTHER

10) ANY BORED HOLES OPENING IN WOOD MEMBERS ARE PROTECTED WITH 1/16 INCH STEEL PLATE ON ON EACH SIDE OF THE MEMBER IF THERE IS NOT AT LEAST 1 1/4 INCH OF WOOD ON EACH SIDE OF OF THE BORED HOLE UNLESS EMT OR RIGID CONDUIT INSTALLATION, (BY OTHER)

11) INSTALLING CONTRACTOR SHALL CONDUCT PRE-INSPECTION AND PRITEST PRIOR TO ACTUAL TEST OF SYSTEM WITNESSED BY AUTHORITY HAVING JURISDICTION PER NFPA 96 SECTION 1-7.2.1

12) ALL SUPERVISORY ALARMS SHALL BE AUTO-RESTORED WHEN THE CONDITION IS CORRECTED.

WIRE SCHEDULE

ALL WIRE RUNS BETWEEN EXPANSION POINT TO FEILD DEVICE TO BE 18/2 FPL WIRE
ALL SLC CIRCUITS TO BE 18/2 FPL WIRE
ALL NOTIFICATION CIRCUIT TO BE 14ga FPL WIRE

SYSTEM TYPE

FIRE ALARM w/ FIRE SPRINKLED UL CENTRAL STATION MONITORING (UL CENTRAL STATION LISTED ABOVE) SERVICE INVOLVED;

WATER FLOW — SMOKE DETECTOR
TAMPER SUPERVISORY — MANUAL PULL STATION

SERVICE NOT APPLICABLE
HOOD-DUCT SYSTEM — KNOX BOX
SPRAY BOOTH SYSTEM — DUCT SMOKE
HALON, FM200, ETC. — SPRAY BOOTH
CO 2 SYSTEM

PROJECT INFORMATION

OCCUPANCY ——— NA
DESCRIPTION ——— SHELL BUILDING
CONSTRUCTION TYPE: —— NA (SPRINKLED)

CIRCUIT STYLE
INITIATING : ——— STYLE B
INDICATING: ——— STYLE-Y

NOTE

THIS PLAN ATTEMPTS TO BE AS ACCURATE AS POSSIBLE, HOWEVER THERE MAY BE DISCREPANCIES THAT WERE NOT FOUND AT THE TIME OF DESIGN OR PLANS CHECK IF DISCREPANCIES ARE FOUND IN THE PRINT AT THE TIME OF INSTALLATION, IT IS THE RESPONSIBILITY OF THE INSTALLER TO CONTACT THE INSTALLATION COMPANY FOR VERIFICATION AND OR CORRECTION

SEQUENCE OF OPERATION

	ALARM	SUPER VISORY	TRBL	ACTIVATES NOTIFICATION SIGNAL	DISPLAY SIGNALS AT ANNUN.	TRANSMIT SIGNALS TO UL CENTRAL STATION	AUTO-RESTORAL UPON RESTORED TROUBLE CONDITION
SMOKE DETECTOR	●			●	●	●	●
MANUAL PULL STATION	●			●	●	●	●
WATER FLOW SWITCH	●			●	●	●	●
SUPERVISORY SWITCHES		●		●	●	●	●
DUCT SMOKE DETECTOR		●		●	●	●	●
SUPERVISION TROUBLE GROUND			●		●	●	●

ZONES REPORTING TO LOCAL ANNUN & CENTRAL STATION

ZONES	DESCRIPTION	LOCATION
ZONE - 08	BELL CKT SUPERVISION	PANEL
ZONE - 09	SMOKE DETECTOR	PANEL
ZONE - 10	MANUAL PULL STATION	EXITS
ZONE - 11	WATERFLOW	RISER CLOSET
ZONE - 12	TAMPER SUPERVISION	PLANTER
ZONE - 13	DUCT SMOKE DETECTOR	CENTER RESTROOM/ STORAGE AREA

CONDUIT FILL CHART (PER N.E.C.)

N.E.C. TABLE 39 MAX.# OF CONDUCTORS IN TRADE SIZES OF CONDUIT OR TUBING BASED ON TABLE 1, CHAPTER 9

CONDUIT TRADE SIZE		1/ 2	3/ 4	1	1 1/ 4	1 1/ 2	2	2 1/ 2	3	3 1/ 2	4
TYPE LETTERS	CONDUCTOR SIZE										
THHN	14	13	24	39	69	94	154				
	12	10	18	29	51	70	114	164			
	10	6	11	18	32	44	73	104	160		
	8	3	5	9	16	26	36	51	79	106	136

CURRENT DRAW PER MANUFACTURE

CURRENT	MODEL NUMBER	DESCRIPTION
0.050	DSM	15cd STROBE
0.061	RSS-2415C-FW	30cd STROBE
0.133	RSS-2410C-FW	75cd STROBE
0.161	AS-2415C-FW	110cd STROBE
0.072	AS-2430C-FW	15cd STROBE HORN
0.097	AS-2475C-FW	30cd STROBE HORN
0.155	AS-2410C-FW	75cd STROBE HORN
0.185	AS-2415W-FR	110cd STROBE HORN

VOLTAGE DROP CALCULATION

ALL NOTIFICATION CIRCUITS USE THE FOLLOWING FORMULA
I * D * RL / CM / V * 100 = % DROP WIRE 14ga 4110CM

I = DEVICE CURRENT IN MILLIAMP
D = ONE WAY WIRE DISTANCE IN FEET
RL = RESISTIVITY CONSTANT
CM = CIRCULAR MILLS OF WIRE
V = SUPPLY VOLTAGE

CIRCUIT No. N-1 LOCATION FIRST FLOOR PLAN
THIS CIRCUIT TO RECEIVE POWER FROM PS-01

DEVICE CURRENT	D		I EOL		RL		CM		V		%		TOTAL
0.097	35	*	0.097	*	21.6	/	4110	/	24	*	100	=	0.074
0.133	45	*	0.230	*	21.6	/	4110	/	24	*	100	=	0.227
0.050	20	*	0.280	*	21.6	/	4110	/	24	*	100	=	0.123
0.050	30	*	0.330	*	21.6	/	4110	/	24	*	100	=	0.145
0.097	35	*	0.427	*	21.6	/	4110	/	24	*	100	=	0.327
0.081	45	*	0.508	*	21.6	/	4110	/	24	*	100	=	0.501
0.155	40	*	0.663	*	21.6	/	4110	/	24	*	100	=	0.607
0.081	30	*	0.774	*	21.6	/	4110	/	24	*	100	=	0.708
0.072	5	*	0.846	*	21.6	/	4110	/	24	*	100	=	0.093
0.097	35	*	0.943	*	21.6	/	4110	/	24	*	100	=	0.723
0.050	35	*	0.993	*	21.6	/	4110	/	24	*	100	=	0.781
0.072	35	*	1.065	*	21.6	/	4110	/	24	*	100	=	0.816
0.185	40	*	1.250	*	21.6	/	4110	/	24	*	100	=	1.095
			FACP										
TOTAL	429	FT											5.999

5.999 TOTAL VOLTAGE DROP
10.0 MAX DROP ALLOWED
!! THIS CIRCUIT WORKS !!

CIRCUIT No. N-2 LOCATION FIRST FLOOR PLAN
THIS CIRCUIT TO RECEIVE POWER FROM PS-01

DEVICE CURRENT	D		I EOL		RL		CM		V		%		TOTAL
0.072	105	*	0.072	*	21.6	/	4110	/	24	*	100	=	0.188
0.097	15	*	0.169	*	21.6	/	4110	/	24	*	100	=	0.058
0.072	30	*	0.241	*	21.6	/	4110	/	24	*	100	=	0.158
0.050	25	*	0.291	*	21.6	/	4110	/	24	*	100	=	0.159
0.050	40	*	0.341	*	21.6	/	4110	/	24	*	100	=	0.299
0.050	65	*	0.391	*	21.6	/	4110	/	24	*	100	=	0.557
0.050	75	*	0.441	*	21.6	/	4110	/	24	*	100	=	0.734
0.097	0		0.538	*	21.6	/	4110	/	24	*	100	=	0.000
			FACP										
TOTAL	355	FT											2.118

2.118 TOTAL VOLTAGE DROP
10.0 MAX DROP ALLOWED
!! THIS CIRCUIT WORKS !!

MATERIAL LIST

QTY	DESCRIPTION	MODEL NUMBER	CSFM LISTING
	RADIONICS		
1	ADDRESSABLE FIRE ALARM CONTROL PANEL	D9124	7165-0801:112
1	ENCLOSURE ASSEMBLY	PROVIDED	
1	ANNUNCIATOR/ KEYPAD	1256	
1	DUAL PHONE LINE MODULE	D928C	
1	TRANSFORMER	D1600	
1	POPEX MODULE	D8125	
5	POPIT MODULE	D9127	
1	INDICATING CIRCUIT SUPERVISORY MODULE	D192C	
1	BATTERY CHARGER	D8132	
1	BATTERY HARNESS	D122	
2	12V 17AH BATTERY	D1218	
7	ADDRESSABLE PULL STATION	D462	7150-0801:131
1	PLUG IN PHOTO SMOKE DETECTOR	D285	7272-0801:162
1	ADDRESSABLE SMOKE AND HEAT DET BASE	D298S	7300-0801:181
	YUASA		
2	12V 7AH BATTERY	NP7-12	
	WHEELOCK		
1	REMOTE POWER SUPPLY	PS-1224-8	7315-0765:149
6	15cd STROBE	RSS-2415W-FR	7125-0785:141
2	30cd STROBE	RSS-2430W-FR	
1	75cd STROBE	RSS-2475W-FR	
4	15cd STROBE HORN	NS-2415W-FR	7125-0785:142
5	30cd STROBE HORN	NS-2430W-FR	
1	75cd STROBE HORN	NS-2475W-FR	
1	110cd SPEAKER STROBE	NS-2411OW-FR	
	ATLAS		
	LOT 2 COND 18ga FPL WIRE	202-18-1-2J	7161-0972:100
	LOT 4 COND 18ga FPL WIRE	202-18-1-4J	
	LOT 2 COND 14ga FPL WIRE	204-14-1-2J	
	LOT THHN OR TFN	104-14-1 / 165-18-16	
	PROVIDED AND MOUNTED BY OTHER		
	POTTER		
1	POST INDICATING VALVE	PVCS-1	7770-0328:010
2	OUTSIDE YOKE VALVE SWITCH	OSYSU-1	
1	WATERFLOW SWITCH (VANE TYPE)	VSR-F	7770-0328:001

STANDBY CURRENT CALCULATION

RADIONICS D9412 PANEL

DEVICE MODEL No.	QTY	(EACH) STAND BY CURRENT	(EACH) ALARM CURRENT	(TOTAL) STAND BY CURRENT	(TOTAL) ALARM CURRENT	
D9412	1	0.350	0.500	0.350	0.500	CPU
D1255	1	0.104	0.105	0.104	0.105	ANNUNCIATOR
D928	1	0.014	0.014	0.014	0.014	DUAL PHONE LINE SWITCHER
D8125	1	0.048	0.048	0.048	0.048	POPEX MODULE
D192C	1	0.015	0.050	0.015	0.050	BELL CIRCUIT MODULE
D9127	5	0.003	0.003	0.015	0.015	POPIT MODULE
PS-1224-8	1	0.000	0.048	0.000	0.048	PS TRIP
	0	0.000	0.000	0.000	0.000	
				0.546	0.781	

STAND BY CURRENT TOTAL	0.546	*	24 =	13.104 STANDBY CURRENT
ALARM CURRENT TOTAL	0.781	/	12 =	0.065 ALARM CURRENT
				13.169 SUBTOTAL
				1.317 10% CONTINGENCY
				14.486 TOTAL CURRENT
				17.000 CURRENT AVAILABLE
				14.486 TOTAL CURRENT REQUIRED
				2.514 CURRENT IN RESERVE

SWITCH TERMINAL CONNECTIONS
CLAMPING PLATE TERMINAL

INCOMING OUTGOING

WARNING
AN UNINSULATED SECTION OF A SINGLE CONDUCTOR IS NOT PERMITTED TO BE LOOPED AROUND THE TERMINAL AND SERVE AS TWO SEPERATE CONNECTIONS. THE WIRE MUST BE SEVERED TO SERVE AS TWO SEPERATE CONNECTIONS. THEREBY PROVIDING SUPERVISION OF THE CONNECTION IN THE EVENT THAT THE WIRE BECOMES DISLODGED FROM UNDER THE TERMINAL.

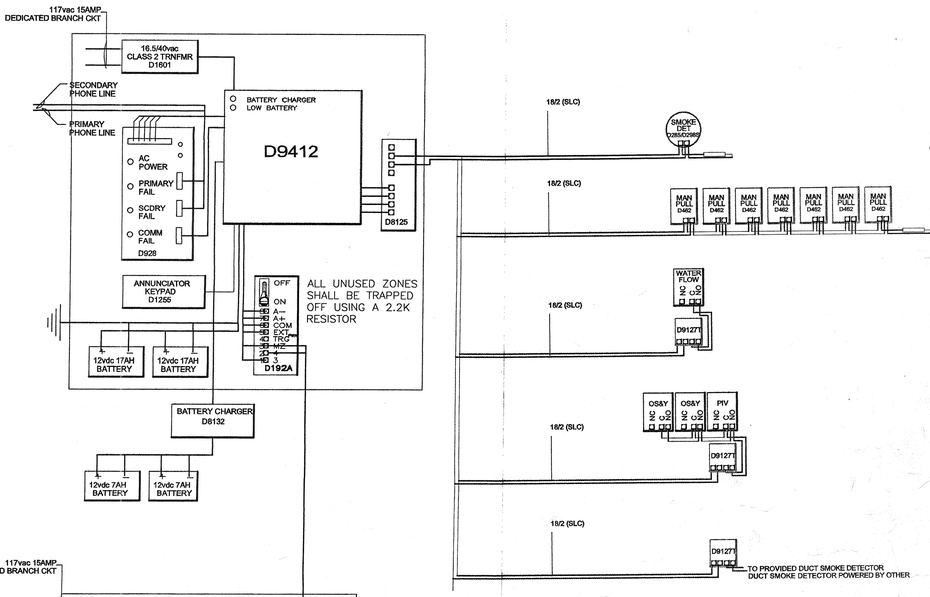

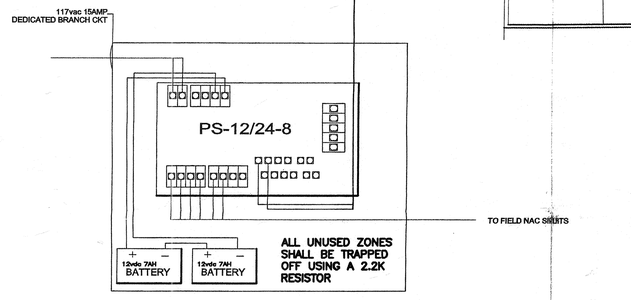

TYPICAL POINT TO POINT

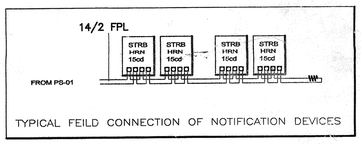

SYMBOLS LEGEND

- FACP — FIRE ALARM CONTROL PANEL
- PS-01 — REMOTE POWER SUPPLY
- A — ANNUNCIATOR
- J — J BOX
- F — MANUAL PULL STATION
- 15cd S — STROBE
- 15cd S — STROBE HORN
- POPIT MODULE
- POPEX MODULE
- S — SMOKE DETECTOR
- WATERFLOW SWITCH
- OS&Y SWITCH
- DUCT SMOKE DET
- DS — DUCT SMOKE DETECTOR

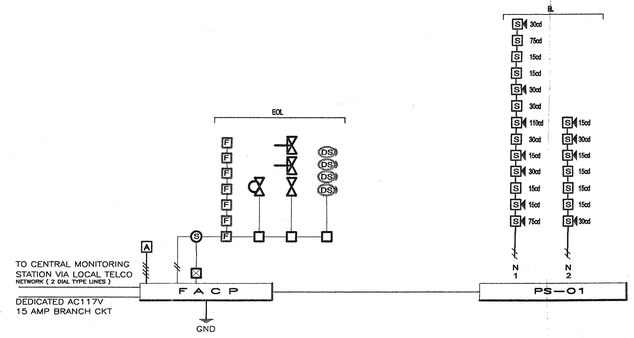

SINGLE LINE DIAGRAM

MAY 17 2001

INSTALLATION CONTRACTOR
INTELLI SEC
INTELLIGENT SECURITY SEVICES
P.O.BOX 4004 LA HABRA, CA 90632-4004
PHONE (714)449-2700 FAX (714)449-2709
STATE LICENSE NO. 672683 CLASS C-10 C-7 C-16 LIC. NO. A-CA5518
UNDERWRITERS LABORATORIES INC. NO. S-2729-1

PROJECT NAME/ LOCATION
PARK AND RECREATION OFFICES
WHITE PARK
3936 CHESNUT STREET
RIVERSIDE, CALIFORNIA

REVISIONS

No.	DESCRIPTION	DATE
1		
2		

SCALE N.T.S.
JOB No. 10306
DATE 04-16-2001
CHECKED BY
DRAWN BY YOUNG

THIS DRAWING IS AN INSTRUMENT OF SERVICE AND THE PROPERTY OF INTELLISEC. THIS DRAWING MAY NOT BE REPRODUCED, OR REPRODUCED HEREOF USED, WITHOUT THEIR WRITTEN PERMISSION.

SHEET TITLE
FIRE SPRINKLED MONITORING SYSTEM
SHEET NO.
FA-01
OF 02

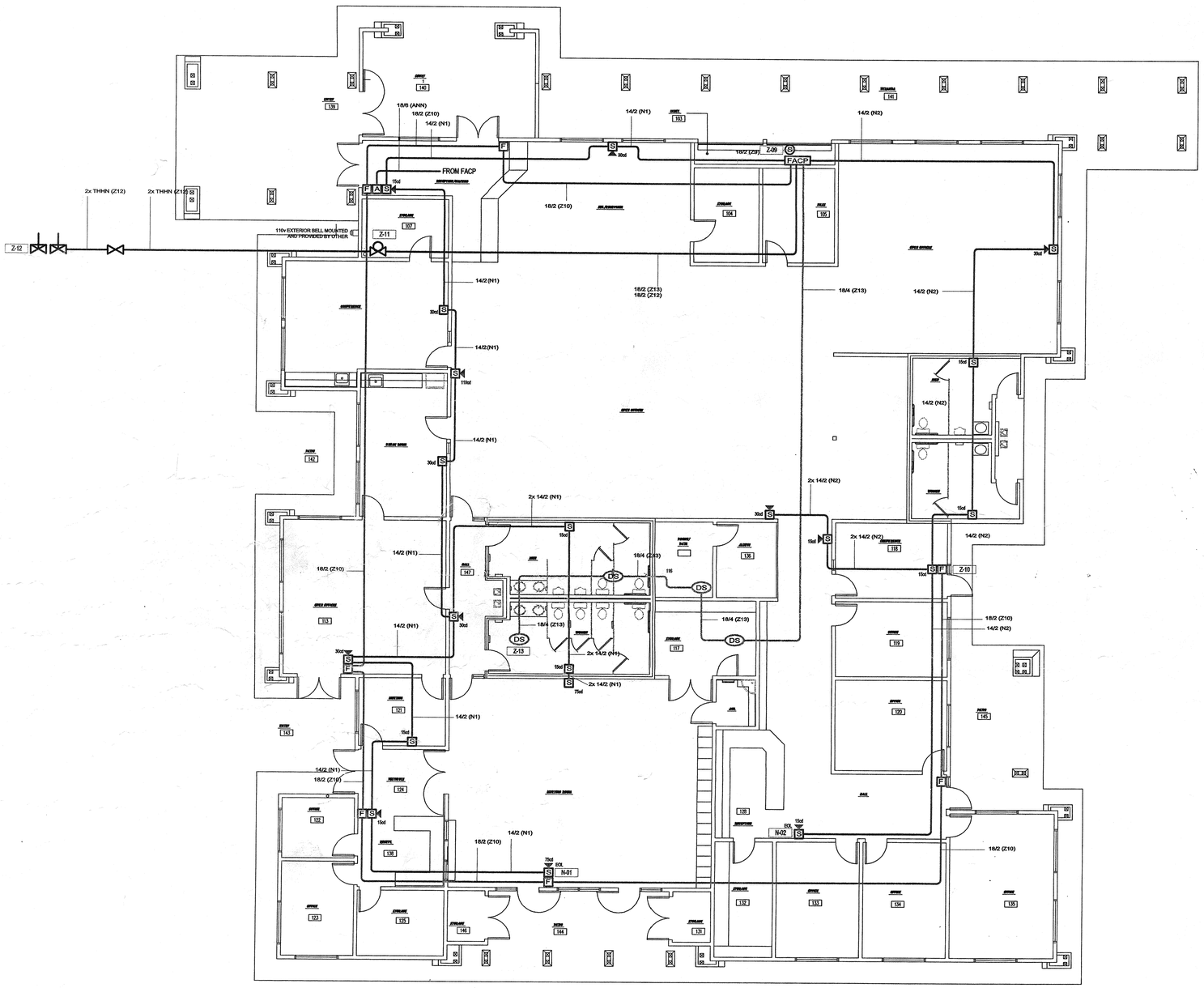

FLOOR PLAN

SCALE: 1/8" = 1'-0"

PLAN NORTH

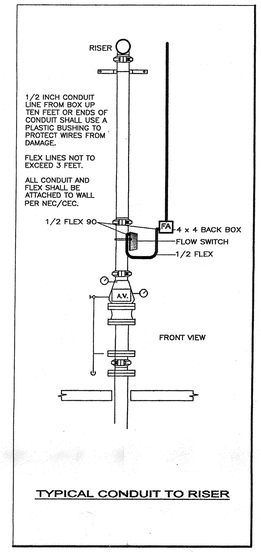

TYPICAL CONDUIT TO RISER

STROBE/ STROBE-HORN

STROBE/ STROBE-HORNS IS TO PROTRUDE NO MORE THAN 4 INCHES IF IN CORRIDORS, WALK WAYS OR AISLE.

STROBE PLACEMENT BASED UPON CONCEPT OF EQUIVALENT FACILITATION

THE AVERAGE AMBIENT NOISE LEVEL FOR THIS OCCUPANCY IS 45dba THE AUDIBLE DEVICE FOR THIS INSTALLATION ARE RATED 82dba AT 10FT. (NOTE: DEVICE CLIP MUST BE SET AT HIGH OUTPUT TO ACHIEVE THIS dba LEVEL.

45dba + 15dba = 60dba (THIS IS THE dba THAT MUST BE ACHIEVED FOR THE ALARM.)

STROBE/HORN AREA OF COVERAGE	15cd HRN 20x20	30cd HRN 30x30	75cd HRN 40x40	110cd HRN 50x50	
STROBE/HORN dba @ 10FT	15cd HRN 82dba	30cd HRN 82dba	75cd HRN 82dba	110cd HRN 82dba	
15cd HORN dba	10 FEET 82dba	20 FEET 76dba	40 FEET 70dba	80 FEET 64dba	
30cd HORN dba	10 FEET 82dba	20 FEET 76dba	40 FEET 70dba	80 FEET 64dba	
75cd HORN dba	10 FEET 82dba	20 FEET 76dba	40 FEET 70dba	80 FEET 64dba	
110cd HORN dba	10 FEET 82dba	20 FEET 76dba	40 FEET 70dba	80 FEET 64dba	

THIS SYSTEM SHALL BE INSTALLED IN ACCORDANCE WITH NFPA STANDARDS 72 AND 72G AS AMENDED IN 1995 CBC CHAPTER 35, (1997 CBC SEC. 1108A.2)

THE NOTIFICATION DEVICES INSTALLED IN THIS SYSTEM SHALL BE SET TO SIGNAL IN (TEMP CODE THREE PULSE).

SMOKE DETECTOR

SMOKE DETECTOR SHALL BE LOCATED PER PLANS AND LOCATION IS BASED ON SPOT PROTECTION

WATERFLOW AND SUPERVISORY SWITCH

INSTALLER TO VERIFY ACTUAL AND PHYSICAL LOCATION OF WATERFLOW AND TAMPER SWITCHES AT TIME OF INSTALL.

SYMBOLS LEGEND

FACP	FIRE ALARM CONTROL PANEL
PS-01	REMOTE POWER SUPPLY
A	ANNUNCIATOR
F	MANUAL PULL STATION
15cd S	STROBE
15cd S	STROBE HORN
S	SMOKE DETECTOR
	WATERFLOW SWITCH
	PIV
	OS&Y SWITCH
Z-000	ZONE INDICATOR
EOL	END OF LINE RESISTOR
	110V BELL BY OTHER

110v EXTERIOR BELL MOUNTED AND PROVIDED BY OTHER

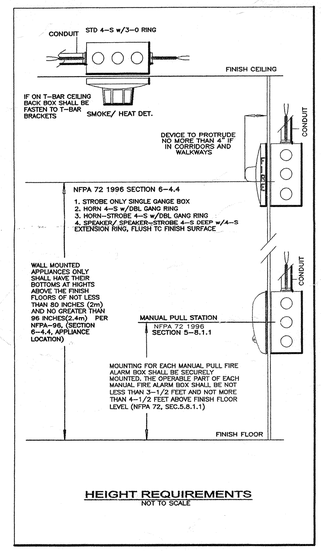

HEIGHT REQUIREMENTS
NOT TO SCALE

UNDERGROUND PVC PROVIDED BY OTHER (IF APPLICABLE)

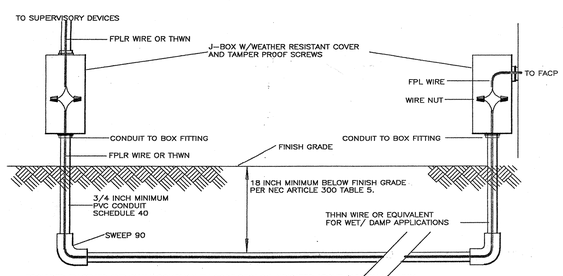

PROVIDED BY OTHER AND SHALL COMPLY WITH CODE SECTION INDICATED ABOVE (18INCH MINIMUM BELOW FINISH GRADE) .

RECEIVED
MAY 17 2001

INSTALLATION CONTRACTOR

INTELLI SEC
INTELLIGENT SECURITY SERVICES
2344 IRONWOOD AVE. MORENO VALLEY, CA 92554
PHONE 909.653.7760 FAX 909.653.7763
STATE LICENSED CONTRACTORS LIC. NO. 672915-A, ACO-416
UNDERWRITERS LABORATORIES INC. No. S7275-1

PROJECT NAME/ LOCATION

PARK AND RECREATION OFFICES
WHITE PARK
3936 CHESNUT STREET
RIVERSIDE, CALIFORNIA

REVISIONS			
No.	DESCRIPTION	DATE	
			SCALE NTS

JOB No. 10306
DATE 04-16-2001
CHECKED BY
DRAWN BY YOUNG

THIS DRAWING IS AN INSTRUMENT OF SERVICE AND THE PROPERTY OF INVERSIDE SYSTEM DESIGNS. THIS DRAWING MAY NOT BE REPRODUCED, OR REPRODUCTIONS HEREOF USED, WITHOUT THEIR WRITTEN PERMISSION.

SHEET TITLE
DEVICE LOCATION PLAN

SHEET NO.
FA-02
OF 02

COURT 140
ENTRY 141
RECEPTION/WAITING 101
STORAGE 107
CONFERENCE 108
BREAK ROOM 112
PATIO 142
ELEC. 108
REC/RECEPTION 102
STORAGE 104
FILES 105
VERANDA 146
OPEN OFFICES 106
OPEN OFFICES 107
OPEN OFFICES 124
MEN 110
WOMEN 111
OPEN OFFICES 115
HALL 141
MEN 114
WOMEN 119
MAIN TEL. BKBRD. "MTB"
MAIN DATA BKBRD. "MDB"
ALCOVE 116
HALL 124
STORAGE 117
OFFICE 114
OFFICE 132
PATIO 148
MEETING 121
ENTRY 148
VESTIBULE 124
OFFICE 122
RECEPT. 130
OFFICE 129
STORAGE 125
STORAGE 146
PATIO 144
STORAGE 131
MEETING ROOM 126
JAN. 127
RECEPTION 128
HALL 130
STORAGE 132
OFFICE 133
OFFICE 134
OFFICE 135
T1/D1
TO "MTB"/"MDB"
T/D
1-3"C.O. TEL.
1-3"C.O. DATA
PHONE/DATA
22'-0"
10'-0"
21'-6"
28'-0"
13'-9"
16'-6"
3'-6" TYP.
12" TYP.
2'-0" TYP.
(TYPICAL)
3'-0"
North side
2" To Pull Box
2" com To Irrigation in maintance shed
2" Pull Box out Back
Pac Bell TO Pole Front
chamfer cable
2" For Telemitry
Room 116 Blow up
1" Conduit

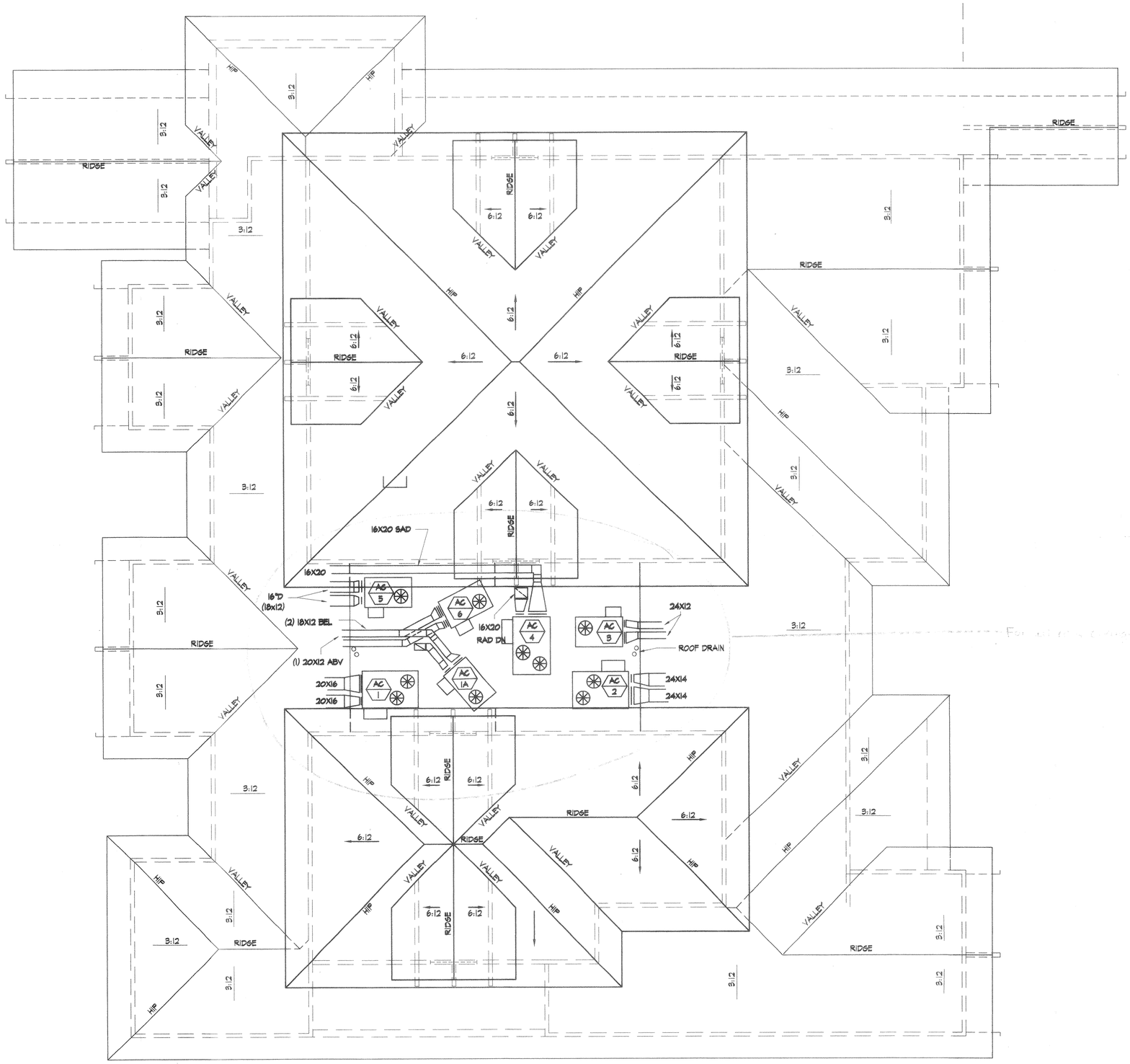
HIP
VALLEY
RIDGE
3:12
6:12
16X20 SAD
16X20
16"D
(18x12)
(2) 18X12 BEL
(1) 20X12 ABV
20X16
20X16
16X20
RAD DN
24X12
ROOF DRAIN
24X14
24X14
AC 1
AC 1A
AC 2
AC 3
AC 4
AC 5
AC 6