150023

White Park Irrigation Rehab.

(A HUD Funded Project)

SHEET INDEX

	Title Sheet
C-1	Selective Demolition & Construction Plan
I-1	Irrigation Plan
I-2	Irrigation Plan
I-3	Irrigation Details
I-4	Irrigation Details & Materials Legend

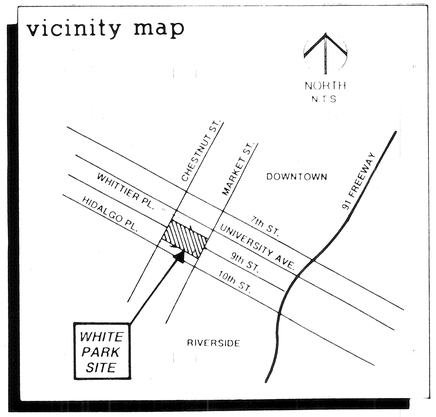

White Park Irrigation Rehabilitation
(A HUD Funded Project)

TITLE SHEET

city of riverside
park & recreation
department
(714) 782-5223
3900 MAIN ST RIVERSIDE, CALIFORNIA 92522

revisions	by

date	July '97
design	
drawn	
check	
acc't.no.	
SHEET	1 of 6

Title Sheet
Plan No. P-595611-1

150023

White Park Irrigation Rehabilitation
(A HUD Funded Project)

SELECTIVE DEMOLITION & CONSTRUCTION PLAN

city of riverside
park & recreation department
(714) 782-5223
3900 MAIN ST RIVERSIDE, CALIFORNIA 92522

revisions	by

date	JULY '97
design	
drawn	
check	
acc't.no.	
SHEET	2 of 6

Sheet C-1
Plan No. P-595611-I

CONTRACTOR TO REMOVE AND TURN OVER TO CITY PARK AND RECREATION DEPARTMENT TWO (2) EXISTING CONTROLLERS IN STORAGE ROOM. CONTRACTOR TO INSTALL TWO (2) NEW SATELLITE CONTROLLERS PER EQUIPMENT LEGEND. 'A' SATELLITE CONTROLLER IS TO BE WIRED WITH THE EXISTING +/-18 VALVES ON EXISTING 'A' CONTROLLER. 'B' SATELLITE CONTROLLER IS TO BE WIRED WITH THE NEW 'B' VALVES (B-1 THROUGH B-26). ANY EXISTING VALVES ON THE EXISTING 'B' CONTROLLER THAT ARE TO REMAIN OPERATIONAL SHALL BE WIRED TO STATIONS B-27 THROUGH B-32. CONTRACTOR IS TO MOUNT AND WIRE NEW SATELLITES AND PHONE LINK CONCENTRATOR PER MANUFACTURER'S DIRECTIONS AND SPECIFICATIONS. FINAL LOCATIONS ARE TO BE DETERMINED IN THE FIELD BY THE CITY. VERIFY ALL EXISTING CONDITIONS IN THE FIELD.

- ALL EXISTING VALVES TO BE REPLACED WITH NEW VALVES
- PROVIDE & INSTALL 2" CONDUIT W/ PULLROPE EXTENDING FROM MARKET STREET TO W/IN 5' OF DALES COMMUNITY CENTER BUILDING FOR FUTURE COMMUNICATIONS ACCESS LINE - PROVIDE 36" COVER,

CONTRACTOR SHALL REPAIR AND/OR REPLACE ALL DAMAGED PLANT MATERIALS OR IRRIGATION EQUIPMENT WHERE NEW IRRIGATION RUNS THROUGH EXISTING AREAS THAT ARE TO REMAIN PROTECTED IN PLACE (TYPICAL).

CONTRACTOR SHALL RUN 1 1/2" CONDUIT WITH TELEPHONE CABLE IN IT FROM EXISTING TELEPHONE SERVICE IN COMMUNITY CENTER BUILDING TO LOCATION OF NEW SATELLITE CONTROLLERS IN STORAGE ROOM. CONTRACTOR SHALL VERIFY ALL EXISTING CONDITIONS IN THE FIELD AND ROUTE CONDUIT AS BEST DETERMINED IN THE FIELD. ALL EQUIPMENT AND INSTALLATION SHALL BE PER CITY STANDARDS AND PACIFIC BELL STANDARDS. COORDINATE WITH PACIFIC BELL TELEPHONE A DEDICATED PHONE LINE FOR OPERATION OF NEW SATELLITES (CITY TO PAY ASSOCIATED COSTS). CONTRACTOR SHALL WIRE PHONE LINES AND PHONE LINK CONCENTRATOR PER MANUFACTURER'S DIRECTIONS AND ALL LOCAL CODES.

36" MINIMUM COVER

CONTRACTOR IS TO VERIFY THE LOCATION OF ALL EXISTING IRRIGATION EQUIPMENT IN THE FIELD PRIOR TO CONSTRUCTION. CONTRACTOR SHALL REPAIR AND/OR REPLACE ANY DAMAGED MATERIAL AND RETURN EXISTING SYSTEMS TO PROPER OPERATING CONDITION.

- REPLACE EXISTING VALVES IN THIS AREA: 3-1"; 1-3/4"; 1-2 1/2"
- PROTECT EX. LATERALS & HEADS & PLANTINGS
- PROVIDE NEW CONTROL WIRE TO NEW CONTROLLERS
- EX. WALL MOUNT CLOCK TO REMAIN PROTECTED IN PLACE

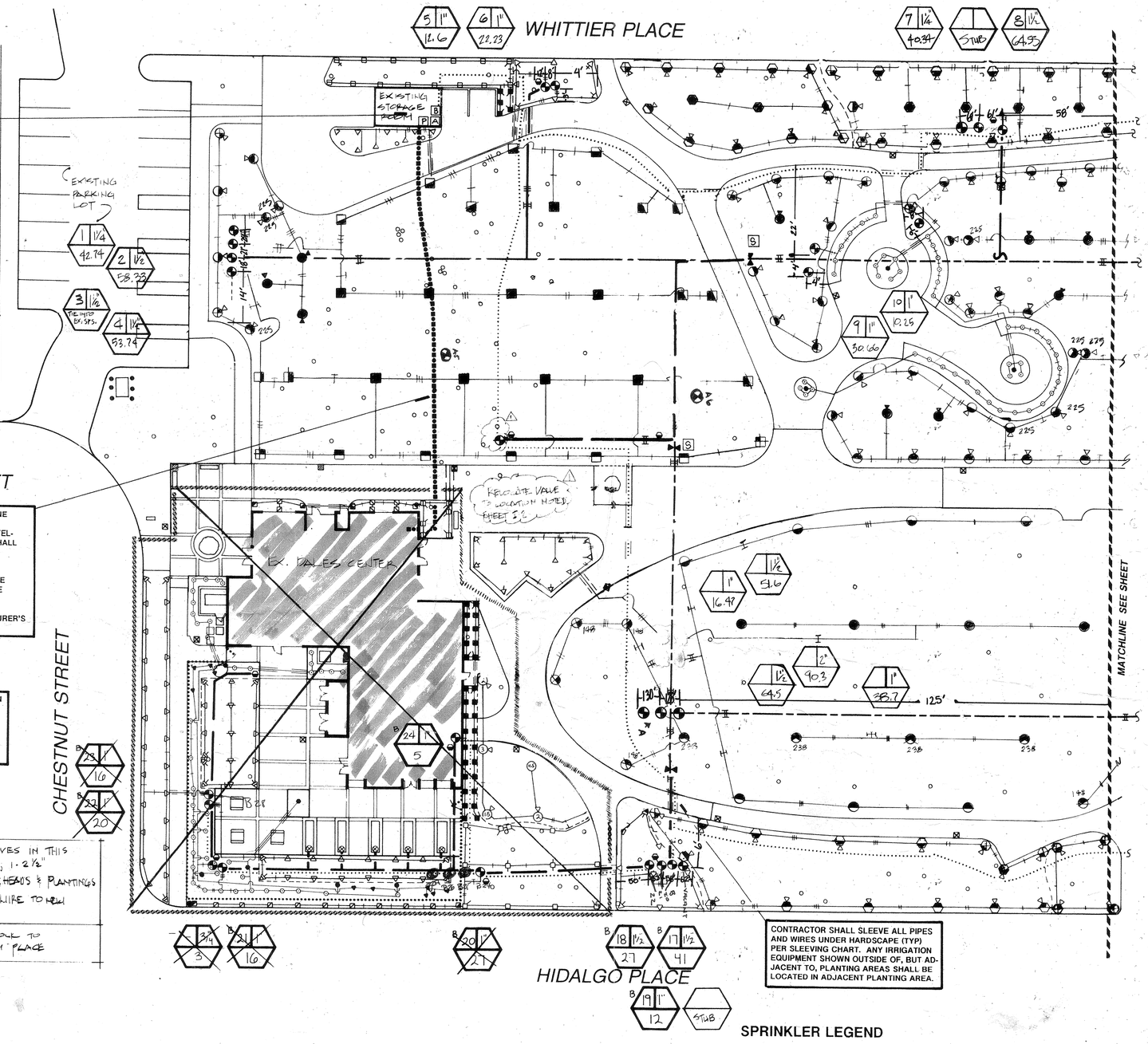

CONTRACTOR SHALL SLEEVE ALL PIPES AND WIRES UNDER HARDSCAPE (TYP) PER SLEEVING CHART. ANY IRRIGATION EQUIPMENT SHOWN OUTSIDE OF, BUT ADJACENT TO, PLANTING AREAS SHALL BE LOCATED IN ADJACENT PLANTING AREA.

SPRINKLER LEGEND

White Park Irrigation Rehabilitation
(A HUD Funded Project)

IRRIGATION PLAN

city of riverside
park & recreation department
3900 MAIN ST (714) 782-5223
RIVERSIDE, CALIFORNIA 92522

revisions	by
1 12.3.97	DE

date	July '97
design	
drawn	
check	
acc't.no.	
SHEET	3 of 6

Sheet I-1
Plan No. P-595611-I

CONTRACTOR TO REMOVE AND TURN OVER TO CITY PARK AND RECREATION DEPARTMENT TWO (2) EXISTING CONTROLLERS IN STORAGE ROOM. CONTRACTOR TO INSTALL TWO (2) NEW SATELLITE CONTROLLERS PER EQUIPMENT LEGEND. 'A' SATELLITE CONTROLLER IS TO BE WIRED WITH THE EXISTING 4-18 VALVES ON EXISTING 'A' CONTROLLER. 'B' SATELLITE CONTROLLER IS TO BE WIRED WITH THE NEW 'B' VALVES (B-1 THROUGH B-26). ANY EXISTING VALVES ON THE EXISTING 'B' CONTROLLER THAT ARE TO REMAIN OPERATIONAL SHALL BE WIRED TO STATIONS B-27 THROUGH B-32. CONTRACTOR IS TO MOUNT AND WIRE NEW SATELLITES AND PHONE LINK CONCENTRATOR PER MANUFACTURER'S DIRECTIONS AND SPECIFICATIONS. FINAL LOCATIONS ARE TO BE DETERMINED IN THE FIELD BY THE CITY. VERIFY ALL EXISTING CONDITIONS IN THE FIELD.

- ALL EXISTING VALVES TO BE REPLACED WITH NEW VALVES
- PROVIDE & INSTALL 2" CONDUIT W/ PULLROPE EXTENDING FROM MARKET STREET TO W/IN 5' OF DALES COMMUNITY CENTER BUILDING FOR FUTURE COMMUNICATIONS ACCESS LINE - PROVIDE 36" COVER,

CONTRACTOR SHALL REPAIR AND/OR REPLACE ALL DAMAGED PLANT MATERIALS OR IRRIGATION EQUIPMENT WHERE NEW IRRIGATION RUNS THROUGH EXISTING AREAS THAT ARE TO REMAIN PROTECTED IN PLACE (TYPICAL).

CONTRACTOR SHALL RUN 1 1/2" CONDUIT WITH TELEPHONE CABLE IN IT FROM EXISTING TELEPHONE SERVICE IN COMMUNITY CENTER BUILDING TO LOCATION OF NEW SATELLITE CONTROLLERS IN STORAGE ROOM. CONTRACTOR SHALL VERIFY ALL EXISTING CONDITIONS IN THE FIELD AND ROUTE CONDUIT AS BEST DETERMINED IN THE FIELD. ALL EQUIPMENT AND INSTALLATION SHALL BE PER CITY STANDARDS AND PACIFIC BELL STANDARDS. COORDINATE WITH PACIFIC BELL TELEPHONE A DEDICATED PHONE LINE FOR OPERATION OF NEW SATELLITES (CITY TO PAY ASSOCIATED COSTS). CONTRACTOR SHALL WIRE PHONE LINES AND PHONE LINK CONCENTRATOR PER MANUFACTURER'S DIRECTIONS AND ALL LOCAL CODES.

36" MINIMUM COVER

CONTRACTOR IS TO VERIFY THE LOCATION OF ALL EXISTING IRRIGATION EQUIPMENT IN THE FIELD FRIOR TO CONSTRUCTION. CONTRACTOR SHALL REPAIR AND/OR REPLACE ANY DAMAGED MATERIAL AND RETURN EXISTING SYSTEMS TO PROPER OPERATING CONDITION.

- REPLACE EXISTING VALVES IN THIS AREA: 3-1"; 1-3/4"; 1-2 1/2"
- PROTECT EX. LATERALS & HEADS & PLANTINGS
- PROVIDE NEW CONTROL WIRE TO NEW CONTROLLERS
- EX. WALL MOUNT CLOCK TO REMAIN PROTECTED IN PLACE

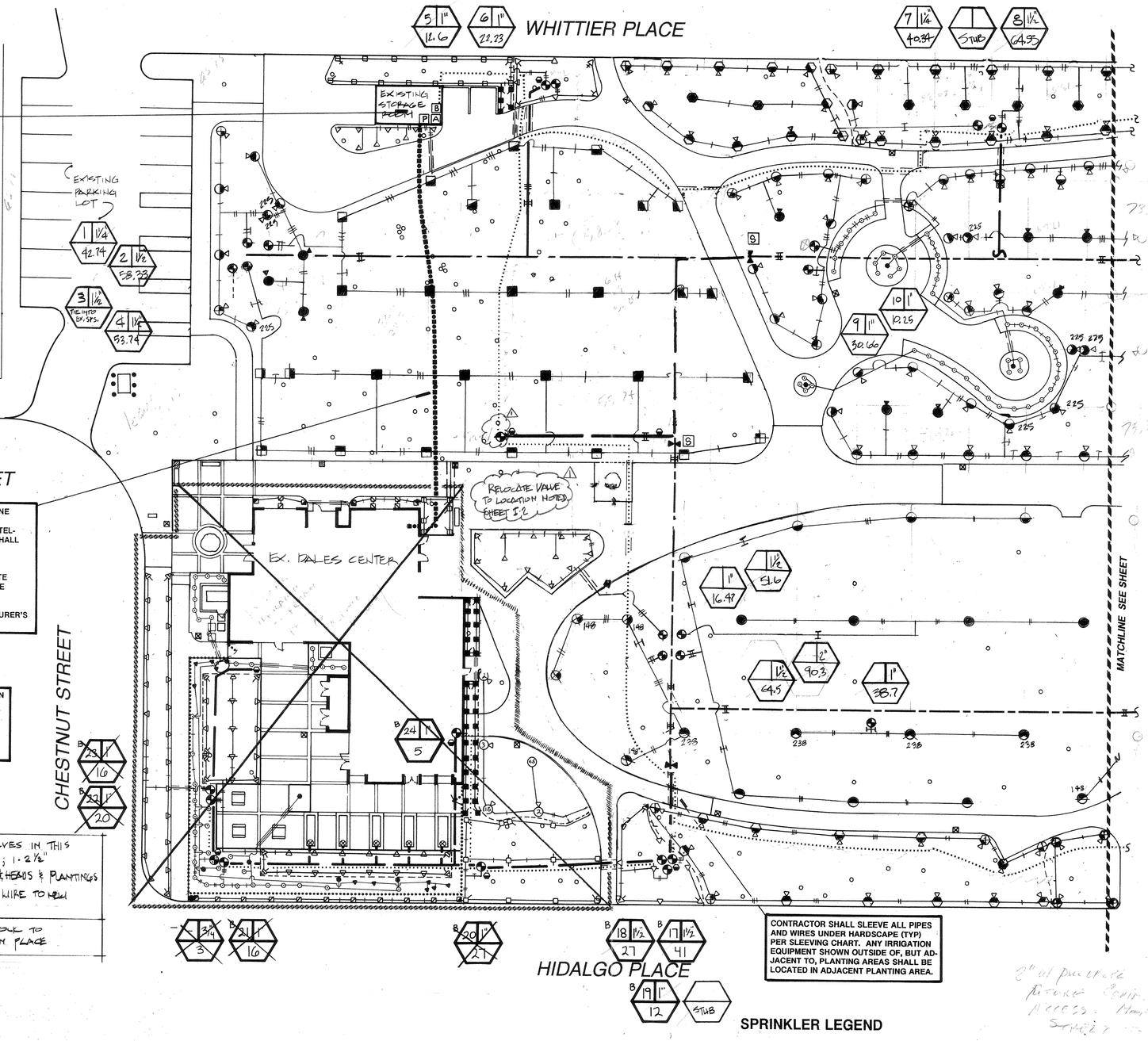

CONTRACTOR SHALL SLEEVE ALL PIPES AND WIRES UNDER HARDSCAPE (TYP) PER SLEEVING CHART. ANY IRRIGATION EQUIPMENT SHOWN OUTSIDE OF, BUT ADJACENT TO, PLANTING AREAS SHALL BE LOCATED IN ADJACENT PLANTING AREA.

2" w/ pullrope for future communications access. Install w/ sleeve & locator

SPRINKLER LEGEND

White Park Irrigation Rehabilitation
(A HUD Funded Project)

IRRIGATION PLAN

city of riverside
park & recreation
department
3900 MAIN ST (714) 782-5223
RIVERSIDE, CALIFORNIA 92522

revisions	by
1 12-3-97	DF

date	July '97
design	
drawn	
check	
acc't.no.	
SHEET	3 of 6

Sheet I-1
Plan No. P-595611-I

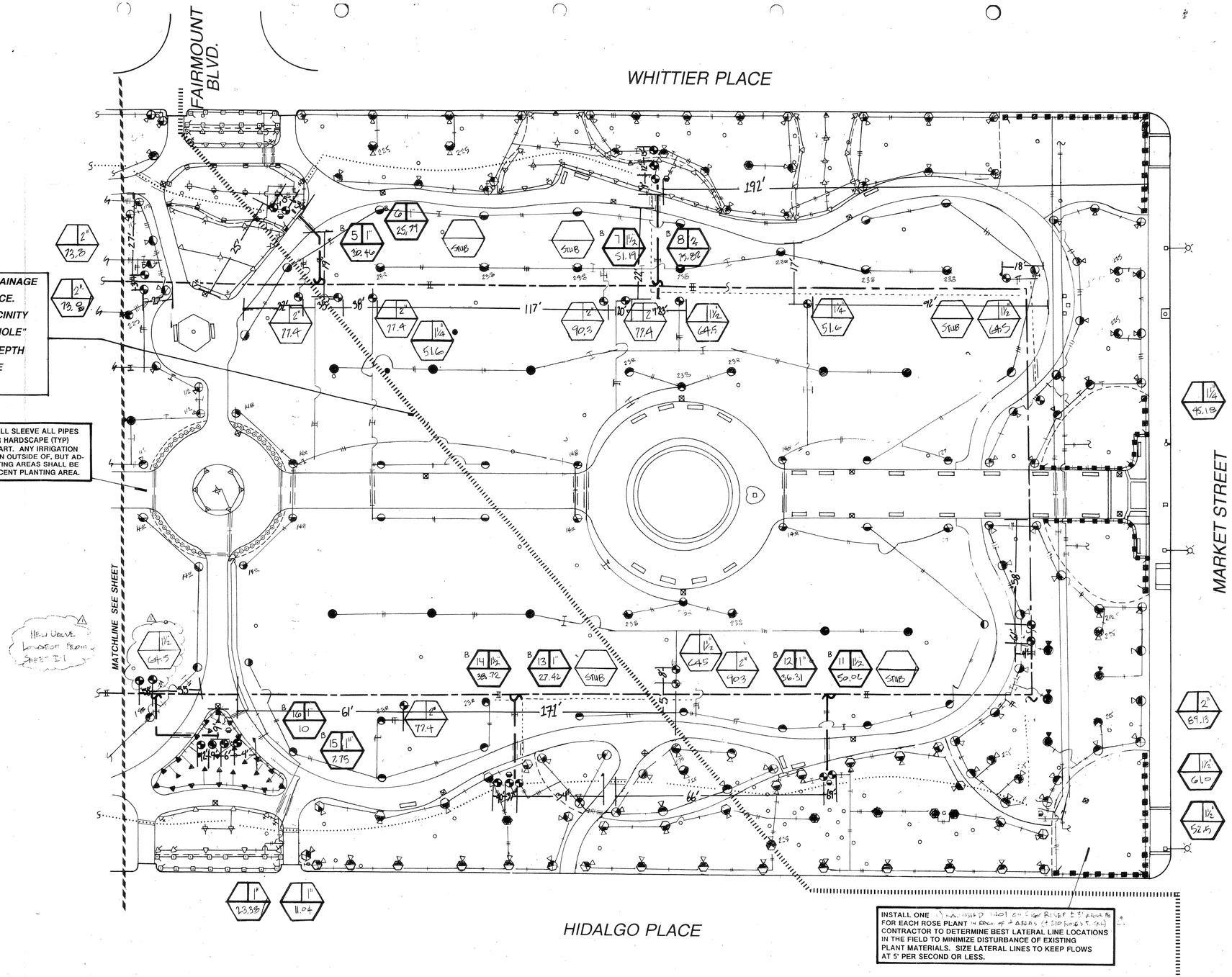

APPROXIMATE LOCATION OF EXISTING DRAINAGE SEWER LINE TO REMAIN, PROTECT IN PLACE. BEFORE BEGINNING ANY WORK IN THE VICINITY OF THE LINE, CONTRACTOR SHALL "POT HOLE" TO DETERMINE THE EXACT LOCATION & DEPTH OF THE LINE IN THE AREA OF WORK TO BE PERFORMED

CONTRACTOR SHALL SLEEVE ALL PIPES AND WIRES UNDER HARDSCAPE (TYP) PER SLEEVING CHART. ANY IRRIGATION EQUIPMENT SHOWN OUTSIDE OF, BUT ADJACENT TO, PLANTING AREAS SHALL BE LOCATED IN ADJACENT PLANTING AREA.

INSTALL ONE [illegible] FOR EACH ROSE PLANT [illegible] CONTRACTOR TO DETERMINE BEST LATERAL LINE LOCATIONS IN THE FIELD TO MINIMIZE DISTURBANCE OF EXISTING PLANT MATERIALS. SIZE LATERAL LINES TO KEEP FLOWS AT 5' PER SECOND OR LESS.

SATELLITE — VALVE SIZE
STATION # — FLOW (GPM)

Underground Service Alert
Call: TOLL FREE
1-800 422-4133
TWO WORKING DAYS BEFORE YOU DIG

SCH 40 PVC SLEEVING CHART

1" SLEEVE	1-3 WIRES	1/2" PIPE
1 1/2" SLEEVE	4-10 WIRES	3/4" PIPE
2" SLEEVE	11-20 WIRES	1" PIPE
2 1/2" SLEEVE	21-30 WIRES	1 1/4" PIPE
3" SLEEVE	31-40 WIRES	1 1/2" PIPE
4" SLEEVE	41-60 WIRES	2"/2 1/2" PIPE
6" SLEEVE	61-99 WIRES	3" PIPE
8" SLEEVE	100+ WIRES	4" PIPE
10" SLEEVE	N/A	6" PIPE

PIPE SIZING CHART

- 1/2" PIPE
- 3/4" PIPE
- 1" PIPE
- 1 1/4" PIPE
- 1 1/2" PIPE
- 2" PIPE
- 2 1/2" PIPE
- 3" PIPE
- 4" PIPE
- 6" PIPE

White Park Irrigation Rehabilitation
(A HUD Funded Project)
IRRIGATION PLAN

city of riverside park & recreation department
(714) 782-5223
3900 MAIN ST RIVERSIDE, CALIFORNIA 92522

revisions	by
△ 12-3-97	AE

date	JULY '97
design	
drawn	
check	
acc't.no.	
SHEET	4 of 6

Sheet I-2
Plan No. P-595611-I

150023

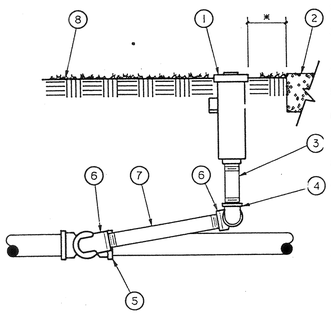

LEGEND

1. TURF POP-UP HEAD
2. WALK OR CURB
3. PVC SCHEDULE 80 NIPPLE - 4" MIN. LENGTH
4. PVC TxT 90 DEGREE ELL
5. LATERAL LINE PIPE AND FITTING
6. MARLEX 90 DEGREE STREET ELL
7. PVC SCHEDULE 80 NIPPLE - 6" LONG
8. FINISH GRADE

* 1" IN TURF AREAS
2" IN SHRUB AREAS

NOTE: USE TEFLON TAPE ON MALE PIPE THREADS FOR PVC TO PVC CONNECTIONS

A TURF POP-UP HEAD

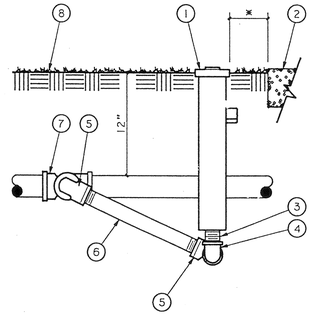

LEGEND

1. 12" POP-UP SPRINKLER
2. WALK OR CURB
3. PVC SCHEDULE 80 NIPPLE
4. PVC TxT 90 DEGREE ELL
5. MARLEX 90 DEGREE STREET ELL
6. PVC SCHEDULE 80 NIPPLE - 12" LONG
7. LATERAL LINE PIPE AND FITTING
8. FINISH GRADE

* 2" IN LAWN AREAS
6" IN GROUNDCOVER AREAS

NOTE: USE TEFLON TAPE ON ALL MALE PIPE THREADS FOR PVC TO PVC CONNECTIONS

B SHRUB HI-POP HEAD

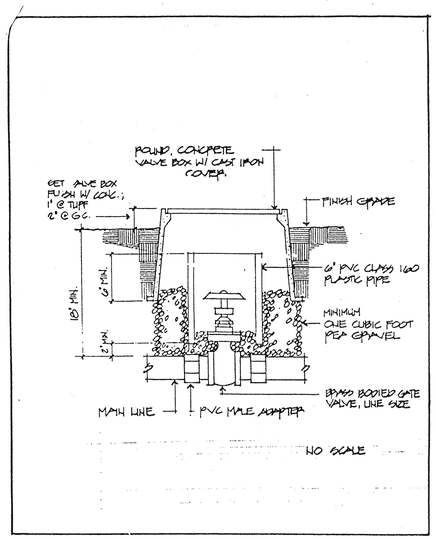

Approved	Date	Park & Recreation Department CITY OF RIVERSIDE	Detail No.
Revised	Date	GATE VALVE	4020

C GATE VALVE

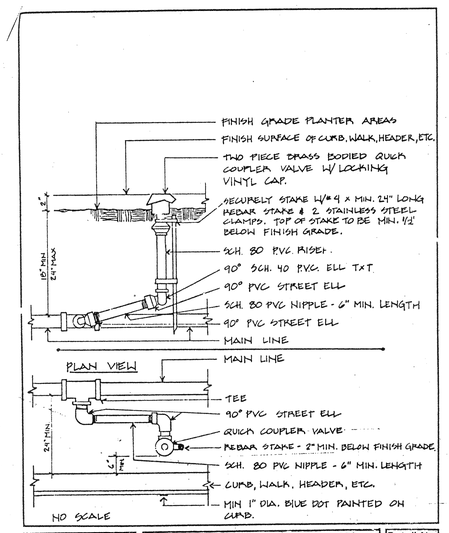

Approved	Date	Park & Recreation Department CITY OF RIVERSIDE	Detail No.
Revised	Date	QUICK COUPLER	4050

D QUICK COUPLING VALVE

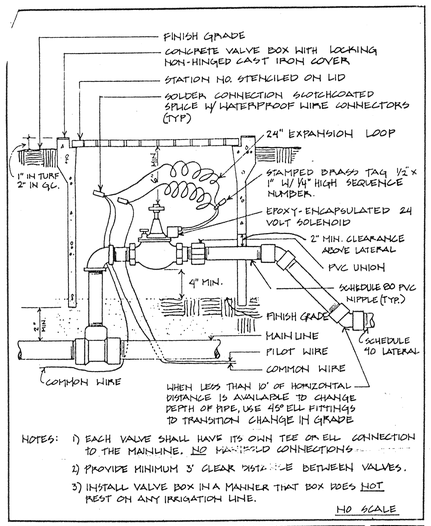

NOTES:
1) EACH VALVE SHALL HAVE ITS OWN TEE OR ELL CONNECTION TO THE MAINLINE. NO MANIFOLD CONNECTIONS.
2) PROVIDE MINIMUM 3' CLEAR DISTANCE BETWEEN VALVES.
3) INSTALL VALVE BOX IN A MANNER THAT BOX DOES NOT REST ON ANY IRRIGATION LINE.

Approved	Date	Park & Recreation Department CITY OF RIVERSIDE	Detail No.
Revised	Date	AUTOMATIC VALVE	4030

E ELECTRIC CONTROL VALVE

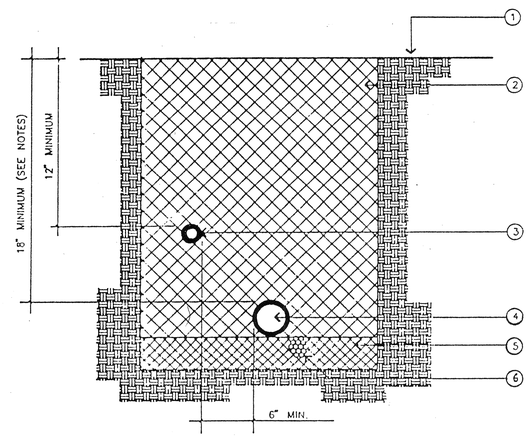

LEGEND
1 FINISH GRADE
2 CLEAN BACKFILL – SEE SPECS. FOR MATERIAL, 90% COMPACTION REQUIRED
3 NON-PRESSURE LATERAL LINE
4 PRESSURE SUPPLY LINE
5 PROVIDE 2" OF CLEAN BACKFILL
6 CONTROL WIRES – BUNDLE AND TAPE AT 15' O.C. AND INSTALL BELOW PRESSURE SUPPLY LINE

NOTES:
— PIGTAIL AND LOOP CONTROL WIRE AT ALL 90 DEGREE CHANGES IN DIRECTION
— SPLICING OF WIRE RUN PER CITY SPECIFICATIONS ONLY

F TRENCHING

White Park Irrigation Rehabilitation
(A HUD Funded Project)

IRRIGATION DETAILS

city of riverside
park & recreation
department
(714) 782-5223
3900 MAIN ST RIVERSIDE, CALIFORNIA 92522

revisions	by

date	JULY '97
design	
drawn	
check	
acc't.no.	
SHEET	5 of 6

Sheet I-3
Plan No. P-595611-I

150023

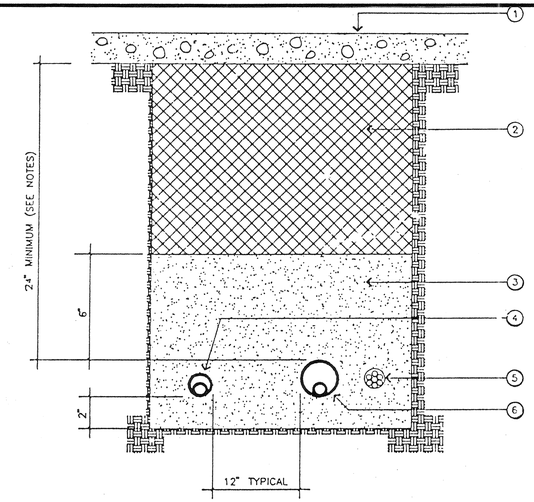

LEGEND

1 HARDSCAPING
2 CLEAN BACKFILL – SEE SPECS. FOR MATERIAL, 90% COMPACTION REQUIRED
3 SAND
4 NON-PRESSURE LATERAL LINE SLEEVE SIZE TWICE DIAMETER OF NON-PRESSURE LATERAL LINE
5 CONTROL WIRE SLEEVE – SIZE PER PLAN, INSTALL ADJACENT TO PRESSURE SUPPLY LINE
6 PRESSURE SUPPLY LINE SLEEVE – SIZE TWICE DIAMETER OF PRESSURE SUPPLY LINE

NOTES:

— ALL SLEEVES TO BE SCH. 40 PVC.

G SLEEVING

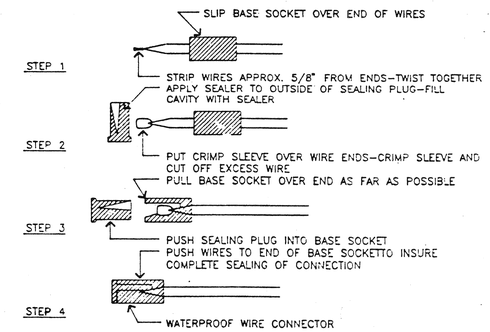

H WIRE CONNECTOR

EQUIPMENT LEGEND

SYM.	MANUFACTURER/MODEL	DESCRIPTION	SIZE	DETAIL
	NIBCO T-113	BRONZE GATE VALVE	LINE SIZE	'C'
	RAINBIRD #44LRC	QUICK COUPLING VALVE	1"	'D'
	GRISWOLD 2000 SERIES - ANGLE	REMOTE CONTROL ELECTRIC VALVE	PLAN SIZE	'E'
	~~NIBCO T-113~~	~~MANUAL VALVE FOR CACTUS IRRIGATION~~	~~3/4"~~	~~'G'~~
	APPROVED	SCH 40 PVC MAINLINE - 18" COVER	1 1/2" AND SMALLER	'F'
	APPROVED	CLASS 315 PVC MAINLINE - 18" COVER	2" AND LARGER	'F'
	APPROVED	CLASS 200 PVC LATERAL LINE - 12" COVER	PLAN SIZE	'F'
	APPROVED	SCH 40 PVC PIPE/WIRE - 24" COVER	PLAN SIZE	'G'
NOT SHOWN	APPROVED	UF DIRECT BURIAL CONTROL WIRE	14 GA	'H'
	EXISTING - VERIFY IN FIELD	EXISTING IRRIGATION MAINLINE	3"	N/A
	EXISTING - VERIFY IN FIELD	EXISTING IRRIGATION MAINLINE TO BE REMOVED AND RELOCATED AROUND NEW PLAY AREA	3"	N/A
	TYPICAL WIRE PATH FOR NEW CONTROL WIRES TO CONTROLLER 'B'- DETERMINE IN FIELD BEST ROUTE TO RUN WIRES WITH MINIMAL DISTURBANCE OF EXISTING PLANTING AND IRRIGATION			N/A
	CONDUIT WITH TELEPHONE LINE FROM COMMUNITY CENTER PHONE SYSTEM (VERIFY LOCATION IN FIELD) TO LOCATION OF SATELLITE CONTROLLERS (DETERMINE BEST ROUTE IN FIELD)		1 1/2"	N/A
A B	TORO 132-56-08	NETWORK 8000 SATELLITE CONTROLLER	32 STATION	'I'
P	TORO 100-76-18	PHONE LINK CONCENTRATOR	N/A	N/A
	~~CHAMPION B-401LK SERIES~~	~~BRASS HOSE BIB - INSTALL HOSE BIB ADJACENT TO SOUTHERN EDGE OF PLANTERS~~	~~3/4"~~	~~SEE DETAIL ON I-1~~
S	VALVE BOX PER SPECIFICATIONS TO BE USED TO PLACE SPLICED WIRES WHEN REROUTING MAINLINE. HEAT BRAND "ELECTRIC" ON TOP OF THE LID.			

SCH 40 PVC SLEEVING CHART

1" SLEEVE	1-3 WIRES	1/2" PIPE
1 1/2" SLEEVE	4-10 WIRES	3/4" PIPE
2" SLEEVE	11-20 WIRES	1" PIPE
2 1/2" SLEEVE	21-30 WIRES	1 1/4" PIPE
3" SLEEVE	31-40 WIRES	1 1/2" PIPE
4" SLEEVE	41-60 WIRES	2"/2 1/2" PIPE
6" SLEEVE	61-99 WIRES	3" PIPE
8" SLEEVE	100+ WIRES	4" PIPE
10" SLEEVE	N/A	6" PIPE

PIPE SIZING CHART

I	1/2" PIPE
II	3/4" PIPE
III	1" PIPE
I	1 1/4" PIPE
II	1 1/2" PIPE
III	2" PIPE
I	2 1/2" PIPE
II	3" PIPE
III	4" PIPE
III	6" PIPE

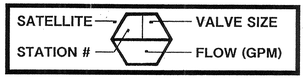

Underground Service Alert
CALL BEFORE YOU DIG
Call: TOLL FREE
1-800
422-4133
TWO WORKING DAYS BEFORE YOU DIG

SPRINKLER LEGEND

SYMBOL	MANUFACTURER/MODEL	DESCRIPTION	NOZZLE	RADIUS	GPM	PSI	DETAIL
	Rainbird 1812-SAM-PRS	Shrub Hi-Pop Spray Head	8Q	8	0.39	30	B
	Rainbird 1812-SAM-PRS	Shrub Hi-Pop Spray Head	8T	8	0.52	30	B
	Rainbird 1812-SAM-PRS	Shrub Hi-Pop Spray Head	8H	8	0.79	30	B
	Rainbird 1812-SAM-PRS	Shrub Hi-Pop Spray Head	10Q	10	0.39	30	B
	Rainbird 1812-SAM-PRS	Shrub Hi-Pop Spray Head	10H	10	0.79	30	B
	Rainbird 1812-SAM-PRS	Shrub Hi-Pop Spray Head	10F	10	1.57	30	B
	Rainbird 1812-SAM-PRS	Shrub Hi-Pop Spray Head	12H	12	1.3	30	B
	Rainbird 1812-SAM-PRS	Shrub Hi-Pop Spray Head	12TT	12	1.74	30	B
	Rainbird 1812-SAM-PRS	Shrub Hi-Pop Spray Head	15Q	15	0.93	30	B
	Rainbird 1812-SAM-PRS	Shrub Hi-Pop Spray Head	15H	15	1.85	30	B
	Rainbird 1812-SAM-PRS	Shrub Hi-Pop Spray Head	15TT	15	2.48	30	B
	Rainbird 1812-SAM-PRS	Shrub Hi-Pop Spray Head	15F	15	3.7	30	B
	Rainbird 1812-SAM-PRS	Hi-Pop Stream Bubbler	5Q-B	5	0.5	30	B
	Rainbird 1812-SAM-PRS	Hi-Pop Stream Bubbler	5H-B	5	1.0	30	B
	Rainbird 1812-SAM-PRS	Shrub Hi-Pop Spray Head	8Q	8	~~1.57~~ 0.39	30	B
	Rainbird 1812-SAM-PRS	Shrub Hi-Pop Spray Head	8H	8	0.79	30	B
	Rainbird 1812-SAM-PRS	Shrub Hi-Pop Spray Head	10H	10	0.79	30	B
	Rainbird 1812-SAM-PRS	Shrub Hi-Pop Spray Head	10F	10	1.57	30	B
	Rainbird 1812-SAM-PRS	Shrub Hi-Pop Spray Head	12T	12	0.87	30	B
	Rainbird 1812-SAM-PRS	Shrub Hi-Pop Spray Head	12H	12	1.3	30	B
	Rainbird 1812-SAM-PRS	Shrub Hi-Pop Spray Head	12TT	12	1.74	30	B
	Rainbird 1812-SAM-PRS	Shrub Hi-Pop Spray Head	12F	12	2.6	30	B
	Rainbird 1804-SAM-PRS	Shrub Pop-Up Bubbler	1401	NA	0.25	30	B
	Rainbird 1804-SAM-PRS	Cactus Pop-Up Bubbler	1401	NA	0.25	30	B
	Toro 304-00-03	Turf Pop-Up Stream Rotor		20	1.36	35	A
1½	Toro 305-00-03	Turf Pop-Up Stream Rotor		20	1.69	35	A
1½	Toro 306-00-03	Turf Pop-Up Stream Rotor		20	2.04	35	A
	Toro 308-00-03	Turf Pop-Up Stream Rotor		20	2.72	35	A
2½	Toro 310-00-03	Turf Pop-Up Stream Rotor		20	3.39	35	A
	Toro 316-00-03	Turf Pop-Up Stream Rotor		20	5.43	35	A
	Toro 304-12-03	Shrub Hi-Pop Stream Rotor		20	1.36	35	B
1½	Toro 305-12-03	Shrub Hi-Pop Stream Rotor		20	1.69	35	B
1½	Toro 306-12-03	Shrub Hi-Pop Stream Rotor		20	2.04	35	B
	Toro 308-12-03	Shrub Hi-Pop Stream Rotor		20	2.72	35	B
2½	Toro 310-12-03	Shrub Hi-Pop Stream Rotor		20	3.39	35	B
	Toro 316-12-03	Shrub Hi-Pop Stream Rotor		20	5.43	35	B
	Toro XP300P-Q-07	Turf Pop-Up Stream Rotor		30	1.54	40	A
	Toro XP300P-H-07	Turf Pop-Up Stream Rotor		30	3.07	40	A
	Toro XP300P-F-07	Turf Pop-Up Stream Rotor		30	6.14	40	A
	Toro 641-02-42	Turf Pop-Up Rotor		45	12.9	50	A
	Toro 640-02-42-127	Turf Pop-Up Rotor		45	12.9	50	A
	Toro 640-02-42-148	Turf Pop-Up Rotor		45	12.9	50	A
	Toro 642-02-42	Turf Pop-Up Rotor		45	12.9	50	A
	Toro 640-02-42-238	Turf Pop-Up Rotor		45	12.9	50	A
	Toro 644-02-42	Turf Pop-Up Rotor		45	12.9	50	A

White Park Irrigation Rehabilitation
(A HUD Funded Project)

IRRIGATION DETAILS & MATERIALS LEGEND

city of riverside
park & recreation
department
(714) 782-5223
3900 MAIN ST RIVERSIDE, CALIFORNIA 92522

revisions	by

date	July '97
design	
drawn	
check	
acc't.no.	
SHEET	6 of 6

Sheet I-4
Plan No. P-595611-I