VILLEGAS COMMUNITY CENTER

Villegas Gym Expansion

7240 Marguerita Avenue Riverside, CA 92504

FIRE DEPARTMENT NOTES

1. CONTRACTOR TO PROVIDE, MONITORED FIRE ALARM SYSTEM, VERIFY IF EXISTING FIRE ALARM SYSTEM IS EXPANDABLE TO MONITOR NEW BUILDING. (VERIFY WITH ALARM CO.)
2. CONTRACTOR TO VERIFY APPROVED WATER PRESSURE AND PROVIDE WATER PRESSURE REDUCING VALVE ON FIRE SPRINKLER RISER.
3. OMIT.
4. SMOKE DETECTORS TO BE PROVIDED IN CORRIDORS PER CODE.
5. OMIT.
6. SUBCONTRACTOR TO PROVIDE SHOP DRAWINGS FOR FIRE SPRINKLER REVIEW AND APPROVAL BY FIRE DEPARTMENT; AS WELL AS, APPROVAL OF FIRE ALARM SYSTEM.
7. SUBCONTRACTOR TO PROVIDE SHOP DRAWING PLANS FOR FIRE ALARM SYSTEM TO FIRE DEPARTMENT FOR REVIEW AND APPROVAL.
8. EMERGENCY LIGHTING WILL BE REQUIRED PRIOR TO OCCUPANCY.
9. ILLUMINATED EXIT SIGNS WITH BATTERY BACK-UP, OR SELF-LUMINOUS TYPE SHALL BE PROVIDED AT REQUIRED EXITS AND ADDITIONAL LOCATIONS AS REQUIRED BY THE CALIFORNIA BUILDING CODE TO CLEARLY INDICATE PATH OF EXIT TRAVEL. LOCATION OF SIGNS SHALL BE SUBJECT TO FIELD APPROVAL BY THE FIRE DEPARTMENT
10. AN AUTOMATIC FIRE SPRINKLER SYSTEM IS REQUIRED BY CITY ORDINANCE. CONTRACTOR TO, SUBMIT PLANS FOR THE AUTOMATIC FIRE SPRINKLER SYSTEM(S) AND OBTAIN APPROVAL FROM THE FIRE DEPT. PRIOR TO INSTALLATION. SYSTEM EXCEEDING 99 SPRINKLER HEADS SHALL BE PROVIDED WITH SUPERVISORY SERVICES AND SHALL BE MONITORED BY AN APPROVAL FACILITY. HAVE ALARM CONTRACTOR SUBMIT PLANS AND OBTAIN APPROVALS PRIOR TO INSTALLATION. ALARM CONTRACTOR SHALL PROVIDE COPY OF MAINTENANCE CONTRACT COMPLYING WITH N.F.P.A. 72. NOTE: SHEET T-1 INDICATED A PRESSURE RELIEF VALVE. THIS WILL BE DETERMINED WITH SPRINKLER SUBMITTAL.
11. PROVIDE PORTABLE FIRE EXTINGUISHERS AS DIRECTED DURING INSPECTION BY THE FIRE DEPARTMENT. EXTINGUISHERS SHALL HAVE A MINIMUM RATING OF 2A10BC AND BE ACCESSIBLE EVERY 75 FEET OF TRAVEL.

1

FIRE DEPARTMENT NOTES

A.C.	ASPHALT CONCRETE
AC.T	ACOUSTIC TILE
AC.PL.	ACOUSTICAL PLASTER
ADD.	ADDENDUM
ADJ.	ADJUSTABLE
ADJC.	ADJACENT
A.F.F.	ABOVE FINISHED FLOOR
ALT.	ALTERNATE
AL.	ALUMINUM
APPROX.	APPROXIMATELY
ASB.	ASBESTOS
BD.	BOARD
BET.	BETWEEN
BLDG.	BUILDING
BLK.	BLOCK
BLKG.	BLOCKING
BM.	BEAM
BOT.	BOTTOM
BSMT.	BASEMENT
CPT.	CARPET
CAB.	CABINET
CA.B.	CATCH BASIN
C.C.	CENTER TO CENTER
CEM.	CEMENT
CEM.PL.	CEMENT PLASTER
CT.	CERAMIC TILE
C.F.	CURB FACE
C.I.	CAST IRON
C.J.	CONSTRUCTION JOINT
C.L.	CENTER LINE
CLG.	CEILING
CLOS.	CLOSET
CLR.	CLEAR
C.O.	CLEANOUT
COL.	COLUMN
COMP.	COMPOSITION
CMU.	CONCRETE MASONRY UNIT
CONC.	CONCRETE
CORR.	CORRIDOR
CONT.	CONTINUOUS
CONTR.	CONTRACTOR
CL.	CENTERLINE
CU.	COPPER
CERT.	CERAMIC TILE
CTSK.	COUNTERSUNK
DET.	DETAIL
DSP.	DRY STANDPIPE
DIA.	DIAMETER
DIM.	DIMENSION
DIV.	DIVISION
DOCS.	DOCUMENTS
DN.	DOWN
DR.	DOOR
D.S.	DOWNSPOUT
DWGS.	DRAWINGS
EA.	EACH
E.J.	EXPANSION JOINT
E.P.	ELECTRIC PANEL
EL.	ELEVATION
ELECT.	ELECTRIC
ENAM.	ENAMEL
E.W.C.	ELECTRIC WATER COOLER
EQ.	EQUAL
EXIST.	EXISTING
EXP.	EXPOSED
EXPAN.	EXPANSION
EXT.	EXTERIOR
F.D.	FLOOR DRAIN
FLOUR.	FLUORESCENT
F.O.S.	FACE OF STUDS
F.F.	FINISHED FLOOR
F.O.F.	FACE OF FINISH

F.O.M.	FACE OF MASONRY
F.GR.	FINISH GRADE
F.E.C.	FIRE EXTINGUISHER CABINET
F.H.C.	FIRE HOSE CABINET
FIN.	FINISH
FL.	FLOOR
F.S.	FINISHED SURFACE
FURR.	FURRING
FLASH.	FLASHING
FPRF'G.	FIREPROOFING
FT.	FEET
FTG.	FOOTING
GA.	GAUGE
GALV.	GALVANIZED
G.I.	GALVANIZED IRON
GL.	GLASS
GR.	GRADE
GRD.	GROUND
GYP.	GYPSUM
G.B.	GYPSUM BOARD
H.B.	HOSE BIBB
H.C.	HOLLOW CORE
H.M.	HOLLOW METAL
HORIZ.	HORIZONTAL
H.PT.	HIGH POINT
HR.	HOUR
HT.	HEIGHT
HTG.	HEATING
HWD.	HARDWOOD
HWRE.	HARDWARE
I.D.	INSIDE DIAMETER
INFO.	INFORMATION
INT.	INTERIOR
INSUL.	INSULATION
INV.	INVERT
ISOL.	ISOLATION
JAN.	JANITOR
JT.	JOINT
LAB.	LABORATORY
LAM.	LAMINATED
LB.	POUNDS
LAV.	LAVATORY
LT.	LIGHT
LT.WT.	LIGHT WEIGHT
L.PT.	LOW POINT
LKR.	LOCKER
MACH.	MACHINE
MAINT.	MAINTENANCE
MFR.	MANUFACTURER
M.H.	MANHOLE
MATL.	MATERIAL
MAX.	MAXIMUM
MECH.	MECHANICAL
MEMB.	MEMBRANE
MET.	METAL
MIN.	MINIMUM
MISC.	MISCELLANEOUS
M.O.	MASONRY OPENING
MTD.	MOUNTED
NAT.	NATURAL
NAT.GR.	NATURAL GRADE
N.I.C.	NOT IN CONTRACT
NO.	NUMBER
NOM.	NOMINAL
NTS.	NOT TO SCALE
O/	OVER
O.A.	OVERALL
O.C.	ON CENTER
O.D.	OUTSIDE DIAMETER
O.D.	OVERFLOW DRAIN
O.F.	OUTSIDE FACE
OPG.	OPENING
OPP.	OPPOSITE

PT.	PAINT
P.L.	PROPERTY LINE
PRTN.	PARTITION
PL.	PLATE
PLAS.	PLASTER
PLAT.	PLATFORM
PLWD.	PLYWOOD
POL.	POLISHED
PR.	PAIR
PROP.	PROPERTY
Q.T.	QUARRY TILE
R.	RISER
RAD.	RADIUS
R.C.	REINFORCED CONCRETE
RD.	ROUND
RF.DR.	ROOF DRAIN
RECT.	RECTANGULAR
REF.	REFERENCE
RGTR.	REGISTER
REINF.	REINFORCED
REQ.	REQUIRED
RESIL.	RESILIENT
RET.	RETAINING
REV.	REVISION
RFG.	ROOFING
RM.	ROOM
R.O.	ROUGH OPENING
RUB.	RUBBER
S.C.	SOLID CORE
S.D.	STORM DRAIN
SCHED.	SCHEDULE
SECT.	SECTION
SIM.	SIMILAR
SHT.	SHEET
S.J.	SEPARATION JOINT
SM.	SMOOTH
SM.PL.	SMOOTH PLASTER
SPEC.	SPECIFICATIONS
S.S.	SERVICE SINK
STL.	STEEL
SS.	STAINLESS STEEL
STAT.	STATIONARY
STOR.	STORAGE
STD.	STANDARD
STRPG.	STRIPPING
STRUCT.	STRUCTURAL
SQ.	SQUARE
SUSP.	SUSPENDED
SYM.	SYMMETRICAL
T.R.D.	TREAD
TEL.	TELEPHONE
TEMP.	TEMPERATURE
TERR.	TERRAZZO
THLD.	THRESHOLD
THERM.	THERMOSTAT
THK.	THICK
T.O.	TOP OF
T.O.P.	TOP OF PARAPET
T.O.S.	TOP OF SHEATHING
TRANF.	TRANSFORMER
TRANS.	TRANSLUCENT
T.P.	TOP OF PAVEMENT
T.S.	TOP OF SLAB
T.W.	TOP OF WALL
TYP.	TYPICAL
U.N.O.	UNLESS NOTED OTHERWISE
VAR.	VARIES
VER.	VERIFY
VERT.	VERTICAL
VEST.	VESTIBULE
V.T.	VINYL TILE
W/	WITH
WAIN.	WAINSCOT
W.C.	WATER CLOSET
WD.	WOOD
W.G.	WIRE GLASS
WIND.	WINDOW
W.O.	WITH OUT

ORIGINALS

ABBREVIATIONS

NOTES

1. Omit.
2. CONTRACTOR TO PROVIDE INTERIOR CABINETS WITHIN THE W.I.C. – MILLWORK STANDARDS INSTITUTE OF CALIFORNIA – CUSTOM GRADE. (SUBMIT SHOP DRAWINGS FOR APPROVAL PRIOR TO FABRICATION.)
3. Omit.
4. THIS PROJECT SHALL CONFORM TO THE 1997 EDITIONS OF THE UNIFORM BUILDING CODE, UNIFORM MECHANICAL CODE, UNIFORM PLUMBING CODE, THE 1993 EDITION OF THE NATIONAL ELECTRICAL CODE, STATE TITLE 24 REGULATIONS, AND CITY AND COUNTY LAWS AND ORDINANCES.
5. Omit.
6. ALL INTERIOR FINISHES SHALL BE OF CLASS 3 FLAME SPREAD RATING (MINIMUM) FOR OCCUPANCY GROUP B.
7. CONTRACTOR TO PROVIDE LEVER-TYPE HARDWARE FOR ALL PASSAGE DOORS ON FLOORS ACCESSIBLE TO THE DISABLED.
8. ALL DUCTS WHICH PENETRATE OCCUPANCY OR AREA SEPARATION WALLS SHALL HAVE FIRE DAMPERS.
9. CONTRACTOR SHALL MAINTAIN THE MAXIMUM NUMBER OF REQUIRED EXITS AND THEIR SEPARATIONS UNTIL EGRESS IS PROVIDED FROM THE STRUCTURE.
10. CONTRACTOR TO POST ALL REQUIRED EXIT SIGNS PER CODE REQUIREMENTS.
11. ALL EXITS SHALL BE LIGHTED WITH AT LEAST ONE FOOT CANDLE AT FLOOR LEVEL.
12. ALL EXITS ARE TO OPERABLE FROM INSIDE WITHOUT THE USE OF A KEY OR SPECIAL KNOWLEDGE. IN LIEU OF THE ABOVE THE CONTRACTOR MAY PROVIDE A SIGN READING "THIS DOOR TO REMAIN UNLOCKED DURING BUSINESS HOURS". THIS SIGNAGE ONLY APPLIES TO THE MAIN EXIT.
13. ALL EXIT DOORS SHALL SWING IN THE DIRECTION OF EGRESS AS REQUIRED PER CODE.
14. ALL EXIT DOORS WHICH ARE USED FOR DISABLED ACCESS SHALL HAVE, ON BOTH SIDES OF THE DOOR, A FLOOR OR LANDING NOT MORE THAN 1/2" BELOW THE THRESHOLD.
15. CORRIDORS MUST PROVIDE CONTINUOUS PROTECTION TO THE EXTERIOR OF THE BUILDING.
16. Omit.
17. DOOR HARDWARE SHALL BE OF THE LEVER OR PUSH TYPE, MOUNTED CENTERED BETWEEN 30" & 44" ABOVE THE FLOOR AND BE OPERABLE WITH A MAXIMUM EFFORT OF 8.5 LBS. FOR EXTERIOR DOORS AND 5 LBS. FOR INTERIOR DOORS.
18. THE LOWER 10" OF THE DOOR SHALL BE OF SMOOTH, PLANE SURFACE (NO RECESS OR TRAP) EXCEPT AT AUTOMATIC AND SLIDING DOORS.
19. WHEN LOCATED ON ACCESSIBLE FLOORS, SANITARY FACILITIES SHALL BE MADE ACCESSIBLE TO PHYSICALLY HANDICAPPED.
20. DOORWAYS SHALL HAVE 32" MINIMUM CLEAR OPENING WIDTH.
21. THERE SHALL BE A LEVEL AREA WITH 60" CLEAR DEPTH IN THE DIRECTION OF THE DOOR SWING, AND A LEVEL AREA WITH 44" CLEAR DEPTH IN OPPOSITE DIRECTION OF DOOR SWING.
22. SINGLE ACCOMMODATION TOILET FACILITIES
    a) WATER CLOSET SHALL BE LOCATED 28" FROM A FIXTURE OR 32" FROM A WALL.
    b) MINIMUM CLEAR SPACE IN FRONT OF WATER CLOSET SHALL BE 48".
    c) IN AN EXISTING BUILDING, A SINGLE ACCOMMODATION TOILET MAY HAVE A SPACE 36"W X 48"L IN FRONT OF WATER CLOSET.
23. GRAB BARS AT WATER CLOSET
    a) ONE AT SIDE 42" LONG EXTENDING 24" IN FRONT OF WATER CLOSET: ONE AT REAR 36" LONG CENTERED ON WATER CLOSET; BOTH MOUNTED 33" ABOVE FLOOR. WHERE A TANK-TYPE TOILET IS USED, GRAB BAR MAY BE AS HIGH AS 36".
    b) BARS SHALL BE 1-1/4" TO 1-1/2" IN DIAMETER WITH 1-1/2" CLEARANCE TO WALL.
    c) BAR FASTENERS AND MOUNTING SUPPORT SHALL BE ABLE TO WITHSTAND 250 LBS./FT. IN BENDING, SHEAR AND TENSION.
24. WATER CLOSET
    a) HEIGHT OF WATER CLOSET SEAT SHALL BE 17" TO 19" ABOVE FLOOR.
    b) CONTROLS SHALL BE OPERABLE WITH ONE HAND, AND SHALL NOT REQUIRE TIGHT GRASPING, PINCHING OR TWISTING OF THE WRIST.
    c) CONTROLS FOR THE FLUSH VALVES SHALL BE MOUNTED ON THE WIDE SIDE OF TOILET AREAS, NO MORE THAN 44" ABOVE THE FLOOR.
    d) THE FORCE REQUIRED TO ACTIVATE CONTROLS SHALL BE NO GREATER THAN 5 LBS. FORCE.
25. LAVATORIES
    a) PROVIDE 30" X 48" CLEAR FLOOR SPACE FOR FORWARD APPROACH. SAID CLEAR FLOOR SPACE MAY INCLUDE KNEE AND TOE SPACE UNDER LAVATORY DESCRIBED BELOW.
    b) PROVIDE CLEAR SPACE BENEATH LAVATORIES 29"H X 30"W X 8"D AT TOP AND 9"H X 30"W X 17"D AT BOTTOM FROM FRONT OF LAVATORY (TOE SPACE). THE MAXIMUM COUNTER SURFACE HEIGHT SHOULD BE 34".
    c) HOT WATER AND DRAIN PIPES UNDER LAVATORIES SHALL BE INSULATED.
    d) FAUCET CONTROLS AND OPERATING MECHANISM (OPERABLE WITH ONE HAND) SHALL BE OF THE TYPE NOT REQUIRING TIGHT GRASPING, PINCHING OR TWISTING OF THE WRIST (SUCH AS LEVER-OPERATED) AND AN OPERATING FORCE NOT EXCEEDING 5 LBS.
    e) IF SELF-CLOSING VALVES ARE USED, THEY SHALL REMAIN OPEN FOR AT LEAST 10 SECONDS.
26. TOILET ROOM ACCESSORIES
    a) MIRROR BOTTOM EDGE SHALL BE LOCATED 40" MAX. ABOVE FLOOR.
    b) TOILET TISSUE DISPENSERS SHALL BE MOUNTED WITHIN 12" FROM THE FRONT EDGE OF TOILET SEAT.
    c) OPERATING PARTS OF DISPENSING AND DISPOSAL FIXTURES (TOWELS, WASTE, COIN SLOTS, ETC.) SHALL BE WITHIN 40" OF FLOOR.
27. SANITARY FACILITIES IDENTIFICATION
    a) ON DOORWAYS LEADING TO SANITARY FACILITIES THE SYMBOLS TO BE PROVIDED ARE 12" EQUILATERAL TRIANGLE FOR MEN, 12" DIA. CIRCLE FOR WOMEN, AND 1/4" THICK, CENTERED ON DOOR, 60"H AND CONTRASTING COLOR. UNISEX FACILITIES SHALL BE IDENTIFIED BY THE CIRCLE WITH TRIANGLE SUPERIMPOSED WITHIN THE CIRCLE.
28. ADDITIONS, ALTERATIONS AND REPAIRS TO EXISTING BUILDINGS SHALL COMPLY WITH THE PROVISIONS OF TITLE 24. ADDITIONALLY:
    a) THE PRIMARY ENTRANCE TO THE BUILDING AND PATH OF TRAVEL TO THE SPECIFIC AREA SHALL BE ACCESSIBLE TO THE HANDICAPPED PERSONS. THERE MUST BE COMPLIANCE, BEGINNING FROM THE EXISTING PARKING AREA AND LEADING TO THE AREA OF ALTERATION.
    b) EXISTING REST ROOMS, WATER FOUNTAINS, AND PUBLIC TELEPHONES WHICH SERVE SAID SPECIFIC AREA MUST BE ACCESSIBLE TO AND FUNCTIONAL FOR HANDICAPPED PERSONS.
    c) INFORMATION REGARDING HANDICAPPED ACCESSIBILITY SHALL BE POSTED IN LOBBY.
29. PROVIDE EXIT SIGNS FOR ALL ROOMS OR AREAS THAT REQUIRED TWO EXITS. PROVIDE BACKUP POWER FOR THE SIGNS FROM EITHER STORAGE BATTERIES OR AN ON-SITE GENERATOR (U.B.C. SECTION 1013) SEE ELECTRICAL DRAWINGS.
30. THE ENTIRE BUILDING IS TO BE EQUIPPED WITH AN APPROVED AUTOMATIC FIRE EXTINGUISHING SPRINKLER SYSTEM AND TIED INTO EXISTING CITY UTILITIES IN THE STREET WHERE THEY EXIST. AUTOMATIC SMOKE DETECTORS INSTALLED WITHIN THE CORRIDORS IN ACCORDANCE WITH THIER LISTING. THE ACTUATION OF ANY DETECTOR SHALL ACTIVATE ALARMS AUDIBLE IN ALL AREAS SERVED BY THE CORRIDOR. FIRE SPRINKLER SYSTEM LAYOUT TO BE ENGINEERED AND INSTALLED PER CODE WITH APPROVAL BY ARCHITECT AND OWNER. CONTRACTOR TO PROVIDE COMPLETE FIRE SPRINKLER ENGINEERED DRAWINGS TO CITY AND/OR COUNTY FOR APPROVAL PRIOR TO INSTALLATION.

1

GENERAL NOTES

1. SCOPE DOCUMENTS: THESE DRAWINGS INDICATE THE GENERAL SCOPE OF THE PROJECT IN TERMS OF ARCHITECTURAL DESIGN CONCEPT, THE DIMENSIONS OF THE BUILDING, THE MAJOR ARCHITECTURAL ELEMENTS AND THE TYPE OF STRUCTURAL, MECHANICAL, ELECTRICAL SYSTEMS. ON THE BASIS OF THE GENERAL SCOPE INDICATED OF DESCRIBED, THE CONTRACTOR SHALL FURNISH ALL ITEMS REQUIRED FOR THE PROPER EXECUTION AND COMPLETION OF THE WORK. DECISIONS OF THE ARCHITECT AS TO THE ITEMS OF WORK INCLUDED WITHIN THE SCOPE OF THESE DOCUMENTS SHALL BE FINAL AND BINDING ON THE CONTRACTOR AND THE OWNER.

2. ALL CONSTRUCTION AND MATERIALS SHALL BE AS SPECIFIED AND AS REQUIRED BY THE CURRENT EDITION OF THE UBC, LOCAL CODES AND AUTHORITIES. ALL NEW CONSTRUCTION SHALL COMPLY WITH TITLE 24, AND ADA REQUIREMENTS.

3. THE CONTRACTOR SHALL BE RESPONSIBLE FOR THE ACCURATE PLACEMENT OF THE BUILDING ON THE SITE.

4. THE CONTRACTOR SHALL VERIFY ALL DIMENSIONS AND SITE CONDITIONS BEFORE STARTING WORK. SHOULD A DISCREPANCY APPEAR IN THE SPECIFICATIONS OR DRAWINGS, OR IN THE WORK DONE BY OTHERS FROM THE CONTRACT DOCUMENT THAT AFFECT ANY WORK, NOTIFY THE ARCHITECT AT ONCE FOR INSTRUCTION ON HOW TO PROCEED. IF THE CONTRACTOR PROCEEDS WITH THE WORK AFFECTED WITHOUT INSTRUCTIONS FROM THE ARCHITECT, THE CONTRACTOR SHALL MAKE GOOD ANY RESULTING DAMAGE OR DEFECT TO THE SATISFACTION OF THE ARCHITECT. SHOULD A CONFLICT OCCUR IN OR BETWEEN DRAWINGS AND SPECIFICATIONS, OF WHERE DETAIL REFERENCES ON CONTRACT DRAWINGS HAVE BEEN OMITTED, THE CONTRACTOR IS DEEMED TO HAVE ESTIMATED THE MOST EXPENSIVE MATERIALS AND CONSTRUCTION METHOD INVOLVED, UNLESS A WRITTEN DECISION FROM THE ARCHITECTS HAS BEEN OBTAINED WHICH DESCRIBES AN ALTERNATE METHOD AND/OR MATERIALS.

5. THE CONTRACTOR SHALL CONFINE HIS OPERATIONS ON THE SITE TO AREAS PERMITTED BY THE OWNER. THE WORK SHALL BE DONE IN ACCORDANCE WITH APPLICABLE LAWS, LOCAL ORDINANCES, PERMITS AND THE CONTRACT DOCUMENTS. THE JOB SITE SHALL BE MAINTAINED IN A CLEAN, ORDERLY CONDITION FREE OF DEBRIS AND LITTER, AND SHALL NOT BE UNREASONABLY ENCUMBERED WITH ANY MATERIALS OR EQUIPMENT. EACH SUBCONTRACTOR IMMEDIATELY UPON COMPLETION OF EACH PHASE OF HIS WORK SHALL REMOVE ALL TRASH AND DEBRIS AS RESULT OF HIS OPERATION.

6. ALL MATERIAL STORED ON THE SITE SHALL BE PROPERLY STACKED AND PROTECTED TO PREVENT DAMAGE AND DETERIORATION UNTIL USE. FAILURE TO PROTECT MATERIALS MAY BE CAUSE FOR REJECTION OF WORK.

7. THE CONTRACTOR SHALL DO ALL CUTTING, FITTING, OR PATCHING OF HIS WORK THAT MAY BE REQUIRED TO MAKE ITS SEVERAL PARTS FIT TOGETHER PROPERLY AND SHALL NOT ENDANGER ANY OTHER WORK BY CUTTING, EXCAVATING, OR OTHERWISE ALTERING THE TOTAL WORK OR ANY PART OF IT. ALL PATCHING, REPAIRING AND REPLACING OF MATERIALS AND SURFACED, CUT OR DAMAGED IN EXECUTION OF WORK, SHALL BE DONE WITH APPLICABLE MATERIAL SO THAT SURFACES REPLACED WILL, UPON COMPLETION MATCH SURROUNDING SIMILAR SURFACES.

8. NO PORTION OF THE WORK REQUIRING A SHOP DRAWING OR SAMPLE SUBMISSION SHALL BE COMMENCED UNTIL THE SUBMISSION HAS BEEN APPROVED BY THE ARCHITECT. ALL SUCH PORTIONS OF THE WORK SHALL BE IN ACCORDANCE WITH APPROVED SHOP DRAWINGS AND SAMPLES.

9. DIMENSIONS:

   A. ALL DIMENSIONS SHALL HAVE PREFERENCE OVER SCALE.

   B. ALL DIMENSIONS ARE TO FACE OF FINISH UNLESS OTHERWISE NOTED.

   C. CEILING HEIGHT DIMENSIONS ARE FROM FINISH FLOOR SLAB TO FINISH FACE OF CEILING.

10. ALL LEGAL EXIT DOORS SHALL BE OPEN ABLE FROM THE INSIDE WITHOUT THE USE OF A KEY OR SPECIAL KNOWLEDGE OR EFFORT. EXIT SIGNS SHALL BE PROVIDED AT ALL EXITS AS REQUIRED BY CODE. ALL DOORS SWINGS SERVING AN OCCUPANT LOAD OF 50 OR GRATED SHALL SWING IN THE DIRECTION OF EXIT.

11. PROVIDE ALL NECESSARY BLOCKING, BACKING AND FRAMING FOR LIGHT FIXTURE, ELECTRIC UNITS, A.C. EQUIPMENT AND ALL OTHER ITEMS REQUIRING.

12. WHERE LARGER STUDS OR FUR RINGS ARE REQUIRED TO COVER DUCTS, PIPING AND CONDUITS, THE LARGER STUD SIZE OR FURRING SHALL EXTEND THE FULL SURFACE OF THE WALL WIDTH AND LENGTH WHERE THE FURRING OCCURS.

13. LIVE LOAD SIGNS: PROVIDE ON METAL SIGN FOR EACH FLOOR PER THE REQUIREMENTS OF U.B.C. 2304(e). VERIFY LOCATION WITH ARCHITECT.

14. ALL EXTERIORS SHALL MEET THE REQUIREMENTS OF C.A.C., TITLE 8, and ELEVATOR SAFETY ORDERS.

15. PROVIDE ILLUMINATED EXIT SIGNS PER THE REQUIREMENTS OF U.B.C., SECTION 3313.

16. PROVIDE FIRE EXTINGUISHERS PER THE REQUIREMENTS OF LOCAL GOVERNING AUTHORITIES.

17. THE STRUCTURAL, MECHANICAL AND ELECTRICAL DRAWINGS ARE SUPPLEMENTARY TO THE ARCHITECTURAL DRAWINGS. IT SHALL BE THE RESPONSIBILITY OF THE GENERAL CONTRACTOR TO CHECK WITH THE ARCHITECTURAL DRAWINGS BEFORE THE INSTALLATION OF STRUCTURAL, MECHANICAL AND ELECTRICAL WORK. ANY DISCREPANCY BETWEEN THE ARCHITECTURAL AND THE CONSULTING ENGINEER(S) DRAWINGS, SHALL BE BROUGHT TO THE ARCHITECT'S ATTENTION FOR CLARIFICATION. ANY WORK INSTALLED IN CONFLICT WITH THE ARCHITECTURAL DRAWINGS SHALL BE CORRECTED BY THE GENERAL CONTRACTOR AT HIS OWN EXPENSE, AND AT NO EXPENSE TO THE OWNER OR ARCHITECT.

18. MECHANICAL, PLUMBING AND ELECTRICAL CONSTRUCTION TO BE "DESIGNED- BUILD" BY OWNER'S REPRESENTATIVE. ELECTRICAL AND MECHANICAL/ PLUMBING ITEMS INDICATED ON ARCHITECTURAL PLANS ARE DIAGRAMMATIC. CONTRACTOR SHALL SUBMIT SHOP/ ENGINEERING DRAWINGS FOR REVIEW AND APPROVAL BY BUILDING DEPARTMENT PRIOR TO CONSTRUCTION. KROH/ BROESKE ARCHITECTS ASSUME NO RESPONSIBILITY FOR ELECTRICAL/ MECHANICAL AND PLUMBING DRAWINGS INCLUDE WITH THIS SUBMITTAL.

19. THESE DOCUMENTS FOR CONSTRUCTION, ALTHOUGH PREPARED WITH GREAT CARE AND APPROPRIATE DILIGENCE, MAY REPRESENT IMPERFECT INFORMATION AND MAY CONTAIN CODE VIOLATIONS, ERRORS, OMISSIONS, CONTRADICTIONS AND IMPLORE USES OF MATERIALS. CONTRACTOR SHALL REVIEW THIS DOCUMENT PACKAGE THOROUGHLY AND SHALL NOTIFY ARCHITECT IMMEDIATELY UPON ANY SUCH DISCOVERY. ANY DEFICIENT ARCHITECTURAL/ ENGINEERING SERVICES WILL BE PROMPTLY CORRECTED WHEN IDENTIFIED.

20. ALL INTERIOR GYP. BD. SURFACES TO RECEIVE 5/8" GYP. BD. (SMOOTH FINISH WITH NO TOOL MARKS.)

21. PROVIDE REQUIRED NEW AND REVISED DRAFT STOP PROTECTION ABOVE CEILING AS REQUIRED PER U.B.C. SECTION 2516 (f). CONSTRUCT WITH 1/2" GYP. BD. OVER 2X4 MIN. STUDS AT 16" O.C. PER SECTION 2516 (f).

22. CONVENTIONAL FRAMED CEILING: USE 2X6 D.F. #2 CEILING JOISTS AT 16" O.C. – MAY USE 2X4 D.F. #2 CEILING JOISTS AT 16" O.C. AT SOFFITS (MAX. SPAN – 8' – 0"). INTERIOR CEILING AT SOFFITS TO BE 5/8" GYP. BD. (SMOOTH FINISH WITH NOT TOOL MARKS). (ALTERNATE FRAMING: 25 GA. METAL STUDS.) OR AS INDICATED ON STRUCTURAL DWGS.

23. HARDWARE: PROVIDE PANIC HARDWARE AT DOORS REQUIRED BY BUILDING DEPARTMENT AND SELF CLOSER'S AS DIRECTED BY OWNER. CONTRACTOR TO COORDINATE ALL KEYING LOCK FUNCTIONS, FINISHES, KICK PLATES, ETC. WITH OWNER. SUBMIT CUT-SHEETS AND SCHEDULE TO OWNER FOR APPROVAL PRIOR TO ORDERING.

24. PAINTING: ALL MATERIALS TO BE MANUFACTURED BY "PRATT & LAMBERT" AND INSTALLED PER MFGR. SPEC. MANUAL. ALL ITEMS TO BE PAINTED TO RECEIVE ONE COAT PRIMER AND TWO COATS FINISH. PAINT INTERIOR OF DUCT OPENINGS FLAT BLACK BEFORE REGISTERS OR GRILLES ARE INSTALLED. PAINT HVAC GRILLES, REGISTERS, AND REC. LT. TRIM (IF PRE-FINISHED WHITE) TO MATCH ADJACENT SURFACE COLOR IF ADJACENT SURFACE COLOR IS OTHER THAN WHITE. PRIME WALLS AND/OR CEILINGS THAT ARE TO RECEIVE WALL PAPER. (VERIFY LOCATIONS WITH OWNER). MATCH EXISTING AND/OR ADJACENT COLOR UNLESS DIRECTED BY OWNER.

25. CONTRACTOR SHALL PATCH, REPAIR, MATCH, AND RESTORE ALL AREAS OF THIS BUILDING BACK TO ITS EXISTING STATE PRIOR TO INSTALLATION OF APPROVED AUTOMATIC FIRE SPRINKLER SYSTEM. CONTRACTOR SHALL PATCH, REPAIR, MATCH, AND RESTORE ALL AREAS OF THIS BUILDING BACK TO ITS EXISTING STATE PRIOR TO INSTALLATION OF APPROVED PORTABLE FIRE EXTINGUISHERS AND EMERGENCY LIGHTING.

1

RECEIVED
DEC 0 3 2003
PARK & RECREATION DESIGN

CONSTRUCTION NOTES

GYMNASIUM

OCCUPANCY:	A-2.1	
CONSTRUCTION TYPE:	III-ONE HOUR	
BASIC ALLOWABLE:	13,500 s.f.	'97 UBC TABLE 5-B
YARD INCREASE:	(3-SIDES) 2 x 13,500 s.f.	'97 UBC SEC. 505.1.2
SPRINKLER INCREASE:	3 x 27,000 s.f.	'97 UBC SEC. 505.3
TOTAL ALLOWABLE AREA:	81,000 s.f.	
MAX HEIGHT/ NUMBER OF STORIES	2	
ACTUAL BLDG. AREA:	17,819 s.f. EXISTING BUILDING + 5,193 s.f. PROPOSED ADDITION	
TOTAL BLDG. AREA:	**23,012 s.f.**	
CODE:	1997 UBC	3

NOTE:
FULLY SPRINKLED. FIRE SPRINKLER SUBSTITUTION, THEREFORE ONE HOUR CONSTRUCTION NOT REQUIRED. SECTION 508.

CONTRACTOR TO PROVIDE AND INSTALL COMPLETE AUTOMATIC FIRE SPRINKLER SYSTEM AT EXISTING BUILDING AND NEW ADDITION. PROVIDE SITE PIPING TO PROPERTY LINE, FDC, PIV AND OTHER ITEMS AS REQUIRED BY CITY OF RIVERSIDE FIRE DEPARTMENT.

1

CODE ANALYSIS

2 / A-3	ELEVATION NUMBER SHEET NUMBER	1 / A	COLUMN LINE
6 / A-7	SECTION NUMBER SHEET NUMBER	J / A-8 (1, 2, 3, 4)	INTERIOR ELEVATION
8 / A-8	DETAIL NUMBER SHEET NUMBER	6 / A-7	WALL SECTION
2 (triangle)	REVISION NUMBER	101	ROOM NUMBER
2	DOOR NUMBER	2	KEY NOTE
5	WINDOW NUMBER		MATCH LINE

SYMBOLS

T-1 Cover Sheet

Architectural

A1.1 Site Plan
PP-1 Planting Plan
PD-1 Planting Details
IP-1 Irrigation Plan
ID-1 Irrigation Details
5
A2.0 Overall Floor Plan & Occupant Load, Exit, & Fixture Analysis
A2.1 Demolition Plan / Floor Plan
1
A2.2 Roof Plan & Reflected Ceiling Plan
A3.1 Exterior Elevations
A4.1 Building Sections
A5.1 Door, Window & Finish Schedule
A6.1 Interior Elevations
A7.1 Details
A7.2 Details
2 3

Structural

S0.1 General notes and typical details
S0.2 Details
S0.3 General notes and typical deatils
S1 Foundation and Roof plans
S2 Wall elevations

Mechanical/Plumbing

M0.1 HVAC General Notes, Symbols, & Fixture Schedule
M2.1 HVAC Floor and Roof Plans
M5.1 Certificates of Compliance
P0.1 Plumbing Nores and Details
P2.1 Plumbing Floor and Roof Plans

Electrical

E-1 General Notes, Symbols, & Fixture Schedule
E-2 Lighting Plan
E-3 Power Plan

SHEET INDEX

APPLICANT: City of Riverside,
Parks & Recreations Department
3936 Chestnut Street
Riverside, CA 92501
909.826.2000
Fax: 826.2005

ARCHITECT: Kroh/Broeske Architects
6180 Brockton Ave. Suite 202
Riverside, CA 92506
909.788.5940
Fax: 909.275.0149
Jim Broeske, Project Architect

STRUCTURAL ENGINEERS: Johnson & Nielson Associates
647 N. Main Street, Suite 4-B
Riverside, CA 92501
909.686.5122
Fax: 909.686.6752

MECHANICAL/ PLUMBING ENGINEERS: Advanced Environmental Engineering
4056 Williwaw Drive
Irvine, CA 92707
949.651.9393
Fax: 949.651.9393

ELECTRICAL ENGINEERS: Consolidated Engineering
14661 Myford Road, Suite C
Irvine, CA 92614
714.832.6346
Fax: 714.832.9427

LANDSCAPE ARCHITECTS: RHA Landscape Architects - Planning, Inc.
3612 Mission Inn, Avenue
Riverside, CA 92501
909.781.1930
Fax: 909.686.8091

PROJECT DIRECTORY

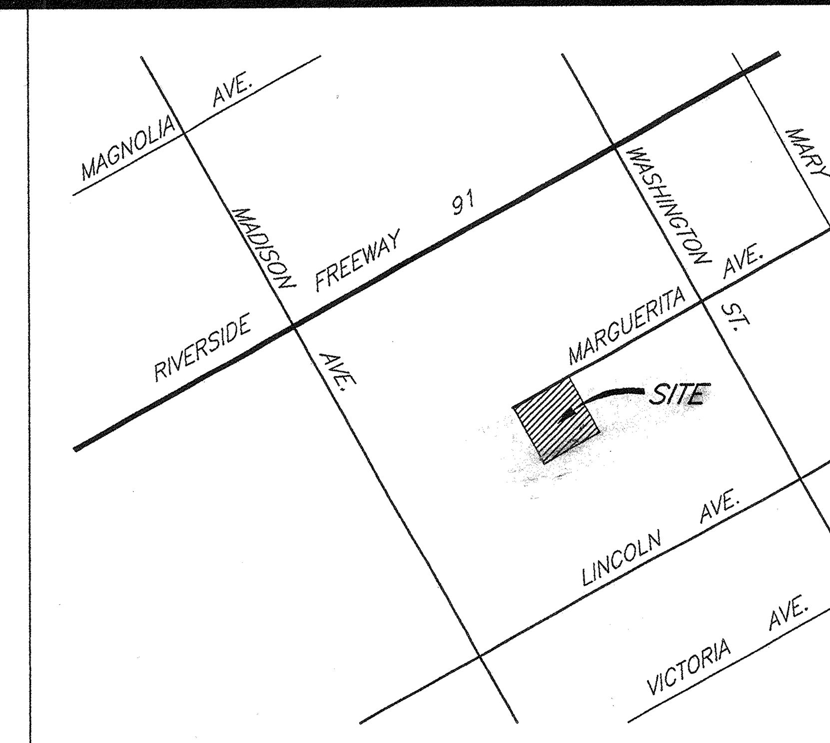

VICINITY MAP

NO SCALE

PROJECT ARCHITECT •

KROH|BROESKE ARCHITECTS

6180 BROCKTON AVE. SUITE 202
RIVERSIDE, CA. 92506-2228
TEL 909-788-5940
FAX 909-788-1365
E-MAIL: KBA@KROHBROESKE.COM

CONSULTANTS •

AS BUILT 8-10-05

PROJECT •

LICENSED ARCHITECT
JAMES L. BROESKE
No. C009174
Ren. 11-30-2003
STATE OF CALIFORNIA

VILLEGAS GYM EXPANSION

7240 MARGUERITA AVE. RIVERSIDE, CA. 92504

REVISION •

1. 01-28-03 1st PLAN CHECK REVISIONS
2. 04-18-03 2nd PLAN CHECK REVISIONS
3. 04-18-03 OWNER REQUESTED REVISIONS
4. 05-12-03 3rd PLAN CHECK REVISIONS
5. 08-12-03 PROJECT REVISIONS

THIS DRAWING AND THE DESIGNS, ARRANGEMENTS, DEPICTIONS, IDEAS AND OTHER INFORMATION CONTAINED HEREIN CONSTITUTE UNPUBLISHED WORK OF KROH/BROESKE ARCHITECTS AND SHALL REMAIN PROPERTY OF KROH/ BROESKE ARCHITECTS IN PERPETUITY. NO PART THEREOF SHALL BE REPRODUCED, COPIED, DISCLOSED, DISTRIBUTED,SOLD, PUBLISHED OR OTHERWISE USED IN ANYWAY WITHOUT THE ADVANCE EXPRESS WRITTEN CONSENT OF KROH/BROESKE ARCHITECTS. VISUAL CONTACT WITH THE ABOVE DRAWINGS, OR ANY PART THEREOF, SHALL CONSTITUTE CONCLUSIVE EVIDENCE OF ACCEPTANCE OF THESE RESTRICTIONS.

SHEET TITLE •

COVER SHEET

DRAWN	•
CHECKED	•
SCALE	• N/A
DATE	• 12-20-02
JOB	• 02029
SHEET	• T-1

BID NO. 6099

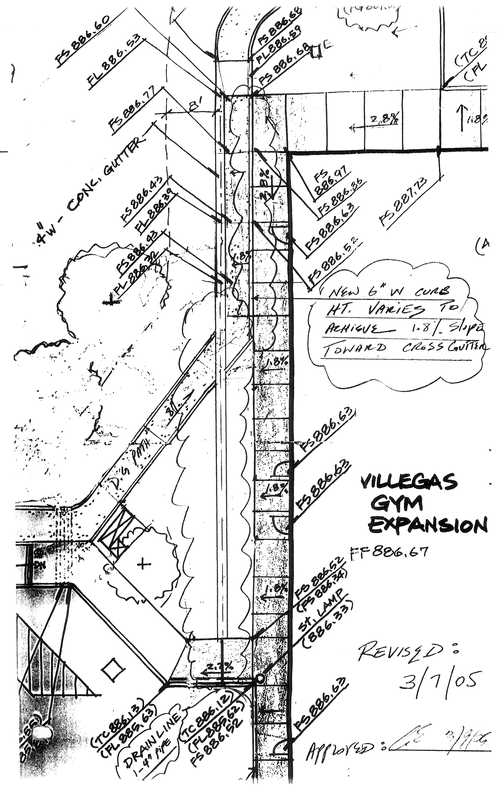

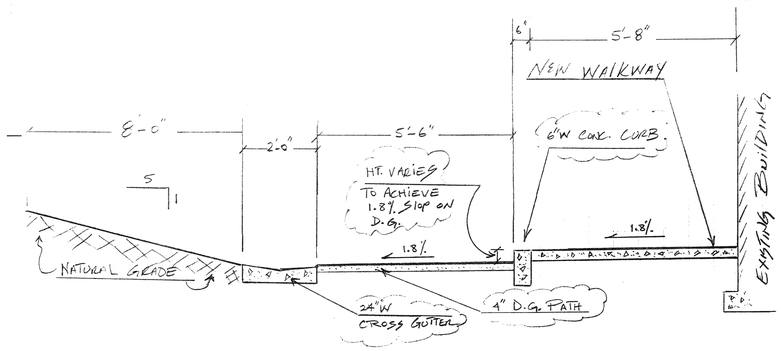

Project: Villegas Gym Expansion
Riverside, CA.

Scale: 1/2" = 1'

Title: Revision To Grading Plan
Dated 3/17/05

Date: 3/9/05

Approved:

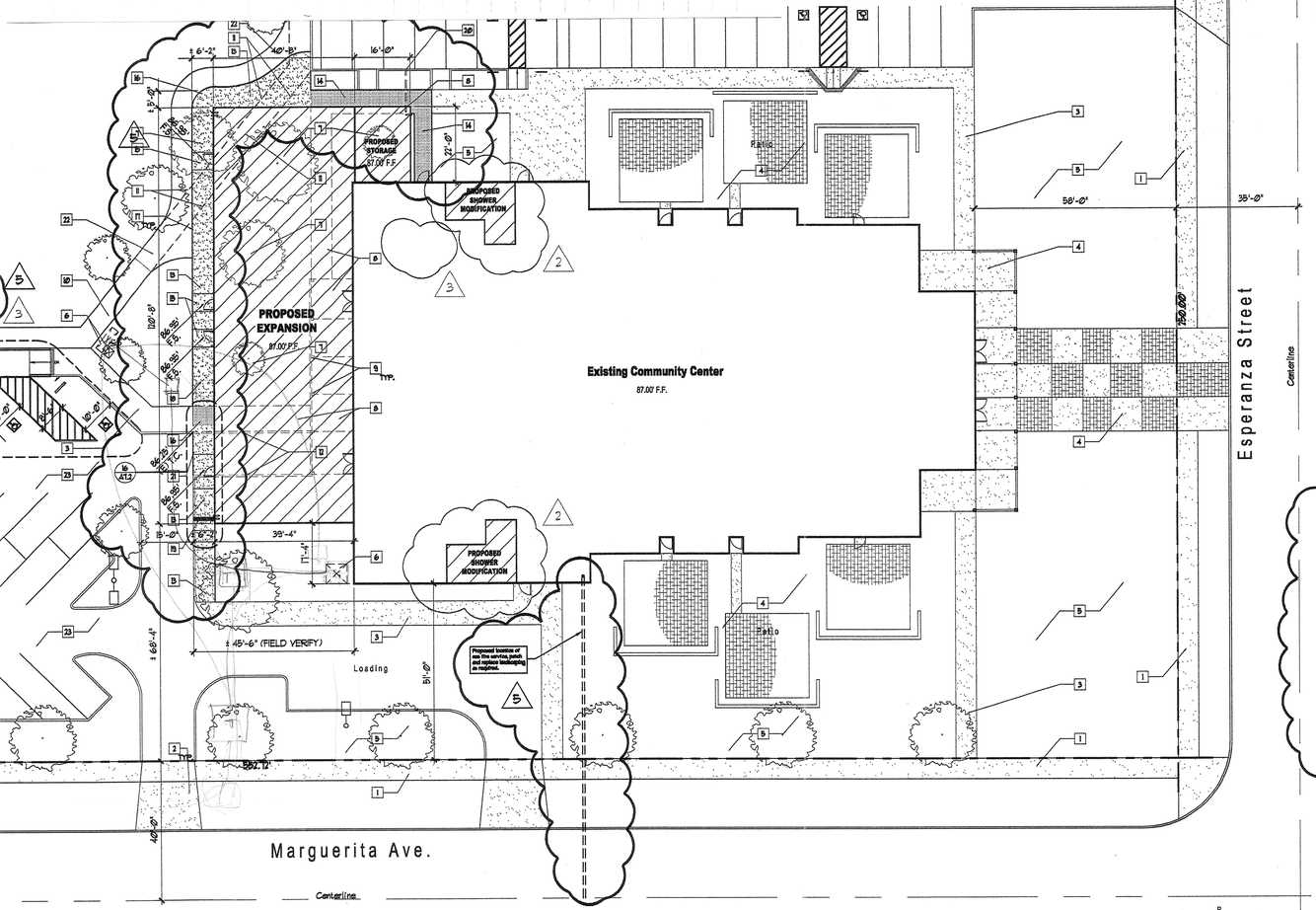

Site Plan
1" = 20'-0"

KEY NOTES

1. (E) Concrete sidewalk.
2. (E) Concrete driveway.
3. (E) Concrete walkway to remain.
4. (E) Concrete pavement.
5. (E) Lawn/Turf.
6. (E) Transformer to remain, protect in place.
7. (E) Trees to be removed.
8. (E) Concrete walkway to be removed.
9. (E) Columns and patio cover above to be removed.
10. (E) Decomposed granite jogging/walking path.
11. (E) Decomposed granite jogging/walking path to be removed.
12. (E) Concrete ramp to be removed.
13. (N) Concrete walkway.
14. Remove and replace existing concrete walk to existing grade.
15. Minimum 5'X5' level area, maximum 2% slope in any direction. Provide yellow warning stripes on concrete walk.
16. (N) Concrete sidewalk to follow existing grade, 2% maximum cross slope.
17. Provide fill under new sidewalk to provide grades as indicated. Slope fill onto adjacent landscape, areas with maximum 1 in 4 slope.
18. (N) Concrete sidewalk with maximum 4.95% grade.
19. (N) Down spout drain in sidewalk, provide metal plate cover to span across walk.
20. (N) Down spout, cut hole into existing curb to facilitate drain pipe.
21. (E) Concrete curb to remain, protect in place.
22. (N) Decomposed granite jogging/walking path, see landscape plans.
23. Slurry seal and restripe existing parking area.

Notes:
1. Contractor to repair all damage to landscaping and irrigation that occurs during construction.
2. Remove existing landscaping and irrigation with area of new construction. Install new irrigation systems and revise existing as required to continue irrigation to areas with existing irrigation.

PROJECT ARCHITECT
KROHI BROESKE ARCHITECTS
6180 BROCKTON AVE. SUITE 202
RIVERSIDE, CA. 92506-2228
TEL 909-788-5940
FAX 909-788-1365
E-MAIL: KBA@KROHIBROESKE.COM

CONSULTANTS

PROJECT

LICENSED ARCHITECT
JAMES L. BROESKE
No. C009174
Ren. 11-30-2003
STATE OF CALIFORNIA

VILLEGAS GYM EXPANSION

7240 MARGUERITA AVE.
RIVERSIDE, CA. 92504

REVISION
- 01-28-03 1st PLAN CHECK REVISIONS
- 04-18-03 2nd PLAN CHECK REVISIONS
- 04-18-03 OWNER REQUESTED REVISIONS
- 05-2-03 3rd PLAN CHECK REVISIONS
- 05-2-03 PROJECT REVISIONS

THIS DRAWING AND THE DESIGNS, ARRANGEMENTS, DEPICTIONS, IDEAS AND OTHER INFORMATION CONTAINED HEREIN ALL REMAIN THE PROPERTY OF KROHI BROESKE ARCHITECTS. IT IS NOT TO BE USED IN WHOLE OR IN PART IN ANY WAY, NO PART THEREOF SHALL BE REPRODUCED, COPIED, USED, DISTRIBUTED, OR PUBLISHED OR OTHERWISE USED IN ANYWAY WITHOUT THE ADVANCE EXPRESS WRITTEN CONSENT OF KROHI BROESKE ARCHITECTS. VISUAL CONTACT WITH THE ABOVE DRAWINGS, OR ANY PART THEREOF, SHALL CONSTITUTE CONCLUSIVE EVIDENCE OF ACCEPTANCE OF THESE RESTRICTIONS.

SHEET TITLE

SITE PLAN

DRAWN	P. JARAMILLO
CHECKED	J. BROESKE
SCALE	1" = 20'-0"
DATE	12-20-02
JOB	02029
SHEET	

A1.1

BID NO. 6009

DRAWING NUMBER
PLAN HOLD CORPORATION • IRVINE, CALIFORNIA
REORDER BY NUMBER 075AR
POSITION EDGE OF PRINT ON THIS LINE
DRAWING NUMBER
PLAN HOLD CORPORATION • IRVINE, CALIFORNIA
REORDER BY NUMBER 075AR
POSITION EDGE OF PRINT ON THIS LINE
DRAWING NUMBER
PLAN HOLD CORPORATION • IRVINE, CALIFORNIA
REORDER BY NUMBER 075AR
POSITION EDGE OF PRINT ON THIS LINE
DRAWING NUMBER
PLAN HOLD CORPORATION • IRVINE, CALIFORNIA
REORDER BY NUMBER 075AR
POSITION EDGE OF PRINT ON THIS LINE
DRAWING NUMBER
V1-163
PLAN HOLD CORPORATION • IRVINE, CALIFORNIA
REORDER BY NUMBER 075AR
POSITION EDGE OF PRINT ON THIS LINE
DRAWING NUMBER
PLAN HOLD CORPORATION • IRVINE, CALIFORNIA
REORDER BY NUMBER 075AR
POSITION EDGE OF PRINT ON THIS LINE

PLANT LEGEND

		SIZE
A	EXISTING ASH TO REMAIN PROTECT IN PLACE	
J	EXISTING JACARANDA TO REMAIN PROTECT IN PLACE	
PD	EXISTING PODOCARPUS TO REMAIN PROTECT IN PLACE	
P	EXISTING PINE TO REMAIN PROTECT IN PLACE	
⊗	RHAPHIOLEPIS INDICA ' SPRINGTIME' INDIA HAWTHORN	5 GAL/SPACING PER PLAN
	TURF SOD PER SPECIFICATIONS CONTRACTOR SHALL REPAIR ALL TURF DAMAGED DURING CONSTRUCTION	
	GAZANIA SPLENDENS 'YELLOW' TRAILING YELLOW GAZANIA	ROOTED CUTTINGS @ 12" O.C. SPACING

HARDSCAPE LEGEND

- NEW CONCRETE MOW CURB PER DETAIL 'C' SHEET PD-1
- EXISTING CONCRETE MOW CURB
- INSTALL 3" THICK STABILIZED DECOMPOSED GRANITE ' SOUTHWEST EARTH TONE' AVAILABLE FROM ' GAIL MATERIALS' 909-279-0956

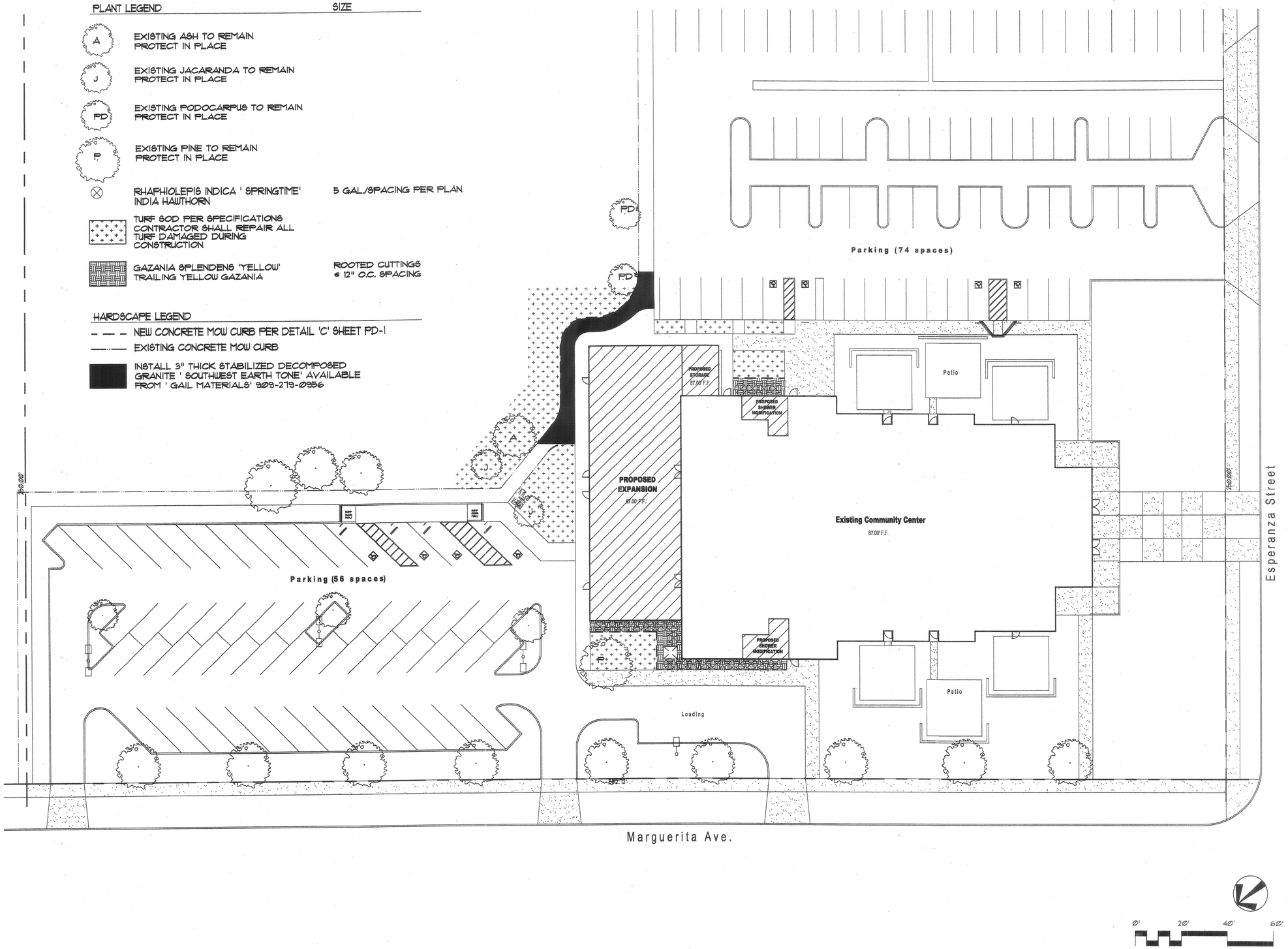

PROJECT ARCHITECT •
KROHI BROESKE ARCHITECTS
6180 BROCKTON AVE. SUITE 202
RIVERSIDE, CA. 92506-2228
TEL 909-788-5940
FAX 909-788-1365
E-MAIL: KBA@KROHIBROESKE.COM

CONSULTANTS •
Mechanical Engineering
Advanced Environmental Engineering
4056 Willowax Drive
Irvine, CA. 92620
PH. 949.651.9393
FAX 949.651.9393

Electrical Engineering
Consolidated Engineering
1481 Mylet Road, Suite C
Tustin, CA 92780
PH. 714. 832-6346
FAX 714. 832-9427

Landscape Architecture
RHA Landscape Architects - Planning, Inc.
3602 Mission Inn Avenue
Riverside, CA 92501
PH. 909.781.1930
FAX 909.685.8091

PROJECT •

REGISTERED LANDSCAPE ARCHITECT — RANDOLPH HILVERK 1661 — Signature 7/31/05 Renewal Date — Date — STATE OF CALIFORNIA

LICENSED ARCHITECT — JAMES R. BROESKE — No. C00317 — Renl/30/05 — STATE OF CALIFORNIA

VILLEGAS GYM EXPANSION

7240 MARGUERITA AVE.
RIVERSIDE, CA. 92504

REVISION •

THIS DRAWING AND THE DESIGNS, ARRANGEMENTS, DEPICTIONS, IDEAS AND OTHER INFORMATION CONTAINED HEREIN CONSTITUTE UNPUBLISHED WORK OF KROHI/BROESKE ARCHITECTS AND SHALL REMAIN PROPERTY OF KROHI BROESKE ARCHITECTS IN PERPETUITY. NO PART THEREOF SHALL BE REPRODUCED, COPIED, DISCLOSED, DISTRIBUTED/SOLD, PUBLISHED OR OTHERWISE USED IN ANYWAY WITHOUT THE ADVANCE EXPRESS WRITTEN CONSENT OF KROHI/BROESKE ARCHITECTS. VISUAL CONTACT WITH THE ABOVE DRAWINGS, OR ANY PART THEREOF, SHALL CONSTITUTE CONCLUSIVE EVIDENCE OF ACCEPTANCE OF THESE RESTRICTIONS.

SHEET TITLE •

PLANTING PLAN

DRAWN	• JE
CHECKED	•
SCALE	• 1"=20'-0"
DATE	• 10-1-03
JOB	• 03129
SHEET	• PP-1

[One Inch on Original Sheet] Drawing File: F:\2002\Villegas Gym Expansion\ 03129PP Dec 03, 2003 - 10:20am

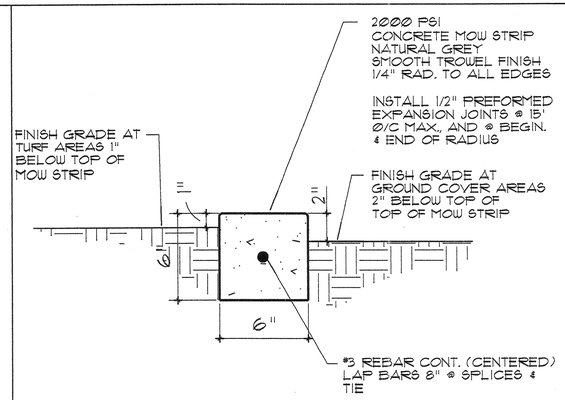

C | CONCRETE MOW CURB

GENERAL PLANTING NOTES

1) Contact the Street Tree Inspector at 351-6126 two working days (48 hours) prior to installing any plant material.
2) Trees planted in turf areas shall be maintained with a minimum 12" radius around the tree free of turf throughout the maintenance period.
3) Watering basins may be removed after the maintenance period.
4) For staking information as applicable, refer to Standard Detail 1002.
5) For guying information as applicable, refer to Standard Detail 1003.
6) For specification information, refer to City of Riverside Park and Recreation Department Standard Specifications, Section 02480 Planting.
7) Provide Fertilizer Tablets as follows:

1 gallon plant	2 tablets
5 gallon plant	3 tablets
15 gallon plant	5 tablets
24" box plant	8 tablets

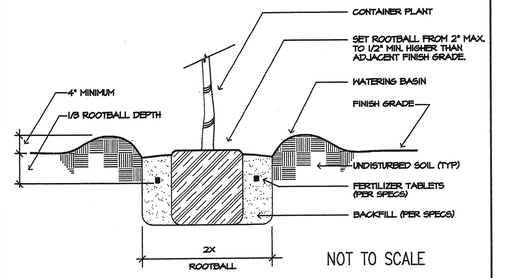

NOT TO SCALE

Approved	Date 04/28/03	Park and Recreation Department CITY OF RIVERSIDE	Detail No.
Revised	Date	PLANTING DETAIL	1001

A | SHRUB PLANTING

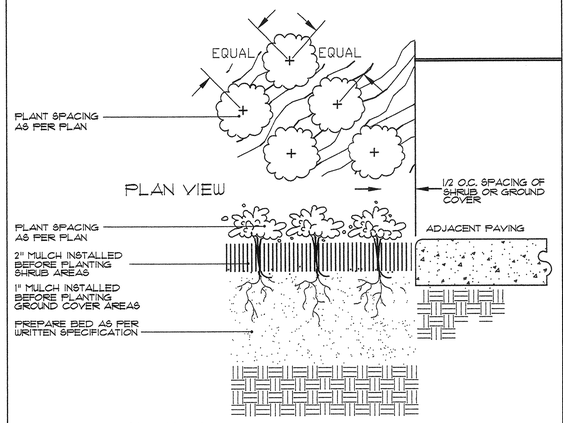

B | GROUND COVERS

PROJECT ARCHITECT •
KROHI BROESKE ARCHITECTS
8180 BROCKTON AVE. SUITE 202
RIVERSIDE, CA. 92508-2228
TEL 909-788-5940
FAX 909-788-1365
E-MAIL: KBA@KROHIBROESKE.COM

CONSULTANTS •
Mechanical Engineering
Advanced Environmental Engineering
4056 Willowaw Drive
Irvine, CA 92620
PH. 949.651.6393
FAX 949.651.9393

Electrical Engineering
Consolidated Engineering
14661 Myford Road, Suite C
Tustin, CA 92780
PH. 714. 832-6346
FAX 714. 832-9427

Landscape Architecture
RHA Landscape Architects - Planning, Inc.
3612 Mission Inn Avenue
Riverside, CA 92501
PH. 909.781.1930
FAX 909.686.8091

PROJECT •

REGISTERED LANDSCAPE ARCHITECT
RANDOLPH HLUBIK NO.1312
Signature
7/31/05
Renewal Date
Date
STATE OF CALIFORNIA

VILLEGAS GYM EXPANSION

7240 MARQUERITA AVE.
RIVERSIDE, CA. 92504

REVISION •

THIS DRAWING AND THE DESIGNS, ARRANGEMENTS, DEPICTIONS, IDEAS AND OTHER INFORMATION CONTAINED HEREIN CONSTITUTE UNPUBLISHED WORK OF KROHI BROESKE ARCHITECTS AND SHALL REMAIN PROPERTY OF KROHI BROESKE ARCHITECTS IN PERPETUITY. NO PART THEREOF SHALL BE REPRODUCED, COPIED, DISCLOSED, DISTRIBUTED, SOLD, PUBLISHED OR OTHERWISE USED IN ANYWAY WITHOUT THE ADVANCE EXPRESS WRITTEN CONSENT OF KROHI BROESKE ARCHITECTS. VISUAL CONTACT WITH THE ABOVE DRAWINGS, OR ANY PART THEREOF, SHALL CONSTITUTE CONCLUSIVE EVIDENCE OF ACCEPTANCE OF THESE RESTRICTIONS.

SHEET TITLE •

PLANTING DETAIL

DRAWN	• PB
CHECKED	•
SCALE	• N.T.S.
DATE	• 10-1-03
JOB	• 03129
SHEET	• PD-1

[One Inch on Original Sheet] Drawing File: F:\2002\Villegas Gym Expansion\03129PD Dec 03, 2003 - 10:30am

DRAWING NUMBER
PLAN HOLD CORPORATION • IRVINE, CALIFORNIA
REORDER BY NUMBER 075AR
POSITION EDGE OF PRINT ON THIS LINE

DRAWING NUMBER
PLAN HOLD CORPORATION • IRVINE, CALIFORNIA
REORDER BY NUMBER 075AR
POSITION EDGE OF PRINT ON THIS LINE

DRAWING NUMBER
PLAN HOLD CORPORATION • IRVINE, CALIFORNIA
REORDER BY NUMBER 075AR
POSITION EDGE OF PRINT ON THIS LINE

DRAWING NUMBER
PLAN HOLD CORPORATION • IRVINE, CALIFORNIA
REORDER BY NUMBER 075AR
POSITION EDGE OF PRINT ON THIS LINE

DRAWING NUMBER
L-1
PLAN HOLD CORPORATION • IRVINE, CALIFORNIA
REORDER BY NUMBER 075AR
POSITION EDGE OF PRINT ON THIS LINE

DRAWING NUMBER
PLAN HOLD CORPORATION • IRVINE, CALIFORNIA
REORDER BY NUMBER 075AR
POSITION EDGE OF PRINT ON THIS LINE

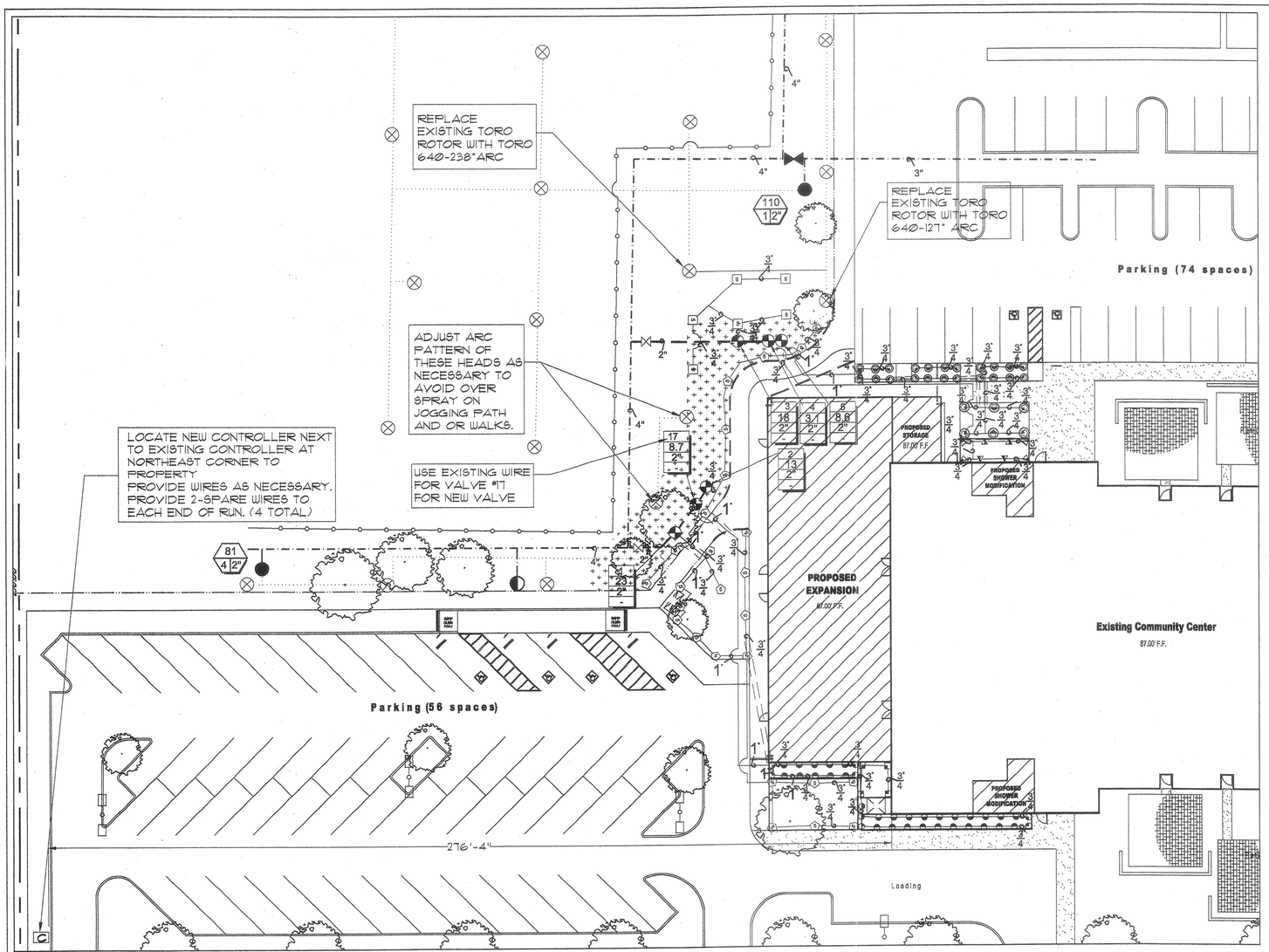

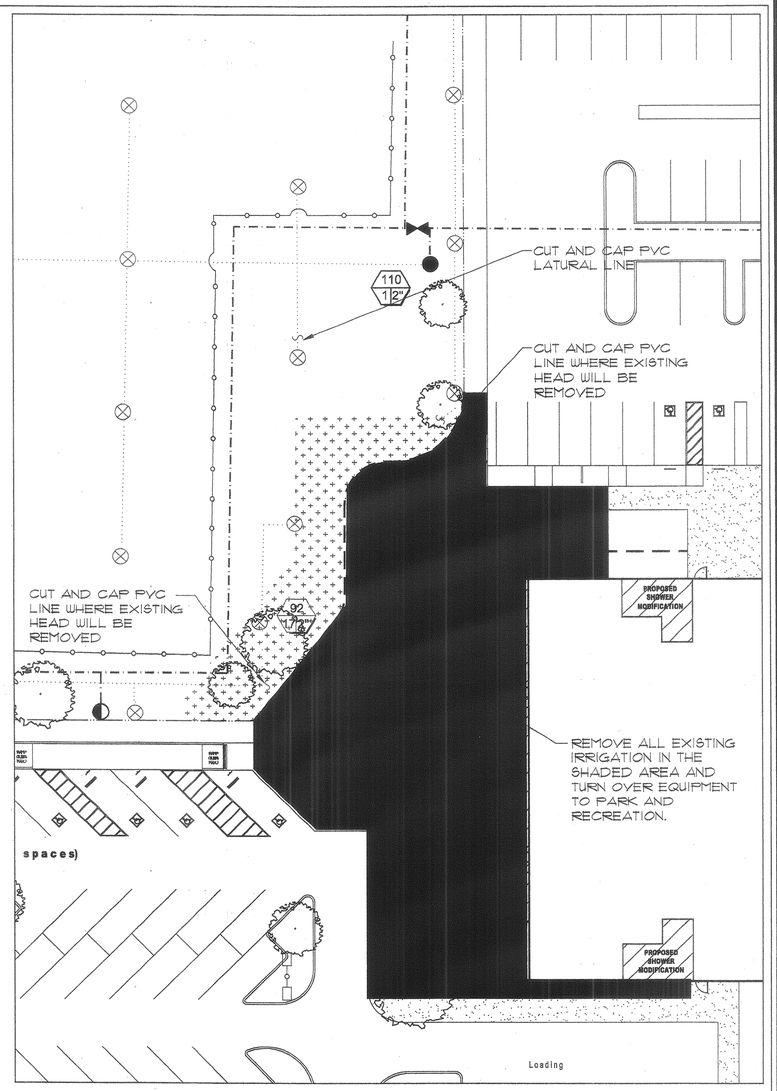

IRRIGATION CONSTRUCTION PLAN

TORO 6" POP-UP ROTORS

SYM.	MODEL	GPM	RAD	PSI	DETAIL
⬠	TORO 308-00-01	1.44	18'	50	"D"/ID-1
8	TORO 316-00-01	2.88	18'	50	"D"/ID-1

RAINBIRD 1800 6" POP-UP SPRAY HEADS

SYM.	MODEL	GPM	RAD	PSI	DETAIL
ⓒ	1806-SAM-PRS-VFC-P-5Q	.10	5'	30	"A"/ID-1
ⓗ	1806-SAM-PRS-VFC-P-5H	.20	5'	30	"A"/ID-1

RAINBIRD 1800 12" POP-UP SPRAY HEADS

SYM.	MODEL	GPM	RAD	PSI	DETAIL
◔	1812-SAM-PRS-VFC-P-5Q	0.10	5'	30	"A"/ID-1
◓	1812-SAM-PRS-VFC-P-5H	0.20	5'	30	"A"/ID-1
▽	1812-SAM-PRS-VFC-P-8Q	0.26	8'	30	"A"/ID-1
▼	1812-SAM-PRS-VFC-P-8H	0.52	8'	30	"A"/ID-1
◈	1812-SAM-PRS-VFC-P-10Q	0.39	10'	30	"A"/ID-1
◔	1812-SAM-PRS-VFC-P-12Q	0.65	12'	30	"A"/ID-1
ⓗ	1812-SAM-PRS-VFC-P-12H	1.30	12'	30	"A"/ID-1

NEW VALVE CALL-OUT

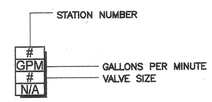

EXISTING VALVE CALL-OUT

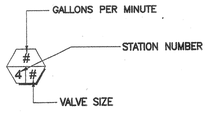

IRRIGATION INFORMATION

APPROX. STATIC PRESSUE: 44-52 PSI

STATIC PRESSURE BASED ON THE INFORMATION OBTAINED FROM RIVERSIDE WATER UTILITIES ON 10-15-03 PER MARTY (909) 826-5822.

IRRIGATION LEGEND

SYM.	MODEL	DETAIL
◕	GRISWOLD 2000 SERIES REMOTE CONTROL VALVE	"B"/ID-1
◩	EXISTING VALVE TO BE REMOVED AND TURNED OVER TO PARK AND RECREATION DEPARTMENT.	
⊗	EXISTING IRRIGATION HEADS TO BE PROTECTED IN PLACE.	
◐	EXISTING QUICK COUPLER TO BE PROTECTED IN PLACE.	
✣	EXISTING ROTOR HEAD TO BE REMOVED AND TURNED OVER TO PARK AND RECREATION DEPT.	
⋈	EXISTING GATE VALVE TO BE PROTECTED IN PLACE.	
⋈	NIBCO T-580 SERIES BALL VALVE.	"F"/ID-1
●	EXISTING REMOTE CONTROL VALVE TO BE PROTECTED IN PLACE	
C	NEW RAINBIRD CONTROLLER ESP- 6 STATION MOUNTED INSIDE STAINLESS STEEL STRONG BOX SB-1866	"G"/ID-1
—o—o—	EXISTING DOMESTIC WATERLINE.	
.....	EXISTING LATERAL TO BE CAPPED AS SHOWN ON PLAN	
———	1½" & SMALLER USE SCH 40 PVC LATERAL LINE-SIZE PER PLAN 2" & LARGER USE CLASS 315 PVC LATERAL LINE-SIZE PER PLAN	"C"/ID-1
— — — —	SCH 40 PVC PIPE/WIRE SLEEVES - SIZE 2X PIPE (REFER TO CHART)	"E"/ID-1
—·—·—	EXISTING MAINLINE	
▬ ▬ ▬	NEW SCH 40 PVC MAINLINE. SIZE PER PLAN	"C"/ID-1

IRRIGATION DEMOLTION PLAN

0' 20' 40' 60'

PROJECT ARCHITECT •
KROH | BROESKE ARCHITECTS
6180 BROCKTON AVE. SUITE 202
RIVERSIDE, CA. 92506-2226
TEL 909-788-6940
FAX 909-788-1365
E-MAIL: KBA@KROHBROESKE.COM

CONSULTANTS •
Mechanical Engineering
Advanced Environmental Engineering
4066 Willaway Drive
Irvine, CA 92620
PH. 949.651.9393
FAX 949.651.9393

Electrical Engineering
Consolidated Engineering
14691 Myford Road, Suite C
Tustin, CA 92780
PH. 714. 832-6346
FAX 714. 832-9427

Landscape Architecture
RHA Landscape Architects - Planning, Inc.
3512 Mission Inn Avenue
Riverside, CA 92501
PH. 909.781.1930
FAX 909.686.8091

PROJECT •

REGISTERED LANDSCAPE ARCHITECT — RANDOLPH HLUBIK 4574 — Signature 9/21/05 — Renewal Date — STATE OF CALIFORNIA

LICENSED ARCHITECT — JAMES L. BROESKE — No. C-20057 — Ren 11/30/05 — STATE OF CALIFORNIA

VILLEGAS GYM EXPANSION

7240 MARGUERITA AVE.
RIVERSIDE, CA. 92504

REVISION •

THIS DRAWING AND THE DESIGNS, ARRANGEMENTS, DEPICTIONS, IDEAS AND OTHER INFORMATION CONTAINED HEREIN CONSTITUTE UNPUBLISHED WORK OF KROH/BROESKE ARCHITECTS AND SHALL REMAIN PROPERTY OF KROH/BROESKE ARCHITECTS IN PERPETUITY. NO PART THEREOF SHALL BE REPRODUCED, COPIED, DISCLOSED, DISTRIBUTED, SOLD, PUBLISHED OR OTHERWISE USED IN ANYWAY WITHOUT THE ADVANCE EXPRESS WRITTEN CONSENT OF KROH/BROESKE ARCHITECTS. VISUAL CONTACT WITH THIS ABOVE DRAWINGS, OR ANY PART THEREOF, SHALL CONSTITUTE CONCLUSIVE EVIDENCE OF ACCEPTANCE OF THESE RESTRICTIONS.

SHEET TITLE •

IRRIGATION PLAN

DRAWN	• JE
CHECKED	•
SCALE	• 1"=20'-0"
DATE	• 10-1-03
JOB	• 03129
SHEET	• IP-1

[One Inch on Original Sheet] Drawing File: F:\03129\Villegas Gym Expension\03129IRR Dec 03, 2003 - 10:30am

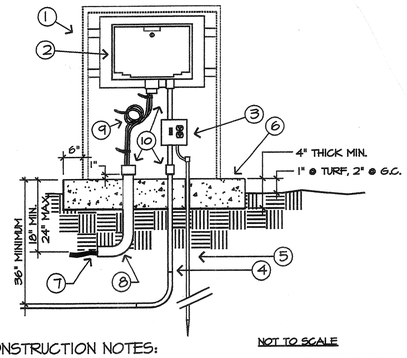

NOT TO SCALE

CONSTRUCTION NOTES:

1. STRONG BOX STAINLESS STEEL ENCLOSURE, MODEL SIZED TO FIT CONTROLLER, WITH SERVICE ADDRESS STENCILED ON LOCKING HINGED DOOR. SECURELY ANCHOR ENCLOSURE TO CONCRETE PAD.
2. WEATHER PROOF AUTOMATIC CONTROLLER, SECURELY WALL MOUNTED TO ENCLOSURE.
3. SQUARE D BREAKER BOX MODEL QO2-L70L OR APPROVED EQUAL WITH SINGLE 15 AMP BREAKER AND DUPLEX OUTLET. MAKE 120 V POWER AND GROUND CONNECTION AT BREAKER BOX. MOUNT IN ENCLOSURE.
4. 5-#8 CU THH WIRES IN MIN. 2" SCH 40 PVC CONDUIT FROM CONTROLLER TO POWER SOURCE. BOND SERVICE TO BREAKER BOX.
5. #8 CU COPPER GROUND WIRE AND 3/4" BY 8' LONG DRIVEN COPPER GROUNDING ROD WITHIN ENCLOSURE. DRIVE ROD PRIOR TO INSTALLATION OF ENCLOSURE.
6. CONCRETE PAD, EXTEND SUFFICIENT DISTANCE IN FRONT OF ENCLOSURE TO ALLOW UNOBSTRUCTED AREA FOR DOOR SWING FREE OF PLANTING, 6" MIN. BEYOND ENCLOSURE ON ALL OTHER SIDES.
7. LOW VOLTAGE DIRECT BURIAL WIRES TO CONTROL VALVES.
8. 40% PRAPPED HDS SWEEP ELL, SIZED TO FIT WIRE FOR NUMBER OF STATIONS ON THE CONTROLLER, PLUS SPARES AND COMMON.
9. THREE FOOT EXPANSION LOOP OF CONTROL WIRE, NEATLY LACED WITH ZIP-LOCKS. MAKE CONNECTION DIRECTLY TO IRRIGATION CONTROLLER TERMINALS FOR 12 STATION & SMALLER. USE TERMINAL STRIPS FOR CONTROLLERS LARGER THAN 12 STATIONS.
10. PROVIDE INSULATING ELECTRICAL BUSHINGS AT CONTROLLER AND END OF CONDUITS.

Approved	Date	Park and Recreation Department CITY OF RIVERSIDE	Detail No.
BJ	05/01/02	IRRIGATION CONTROLLER	4070
Revised	Date		
BJ - Rev. Conductors	11/21/02		

G CONTROLLER

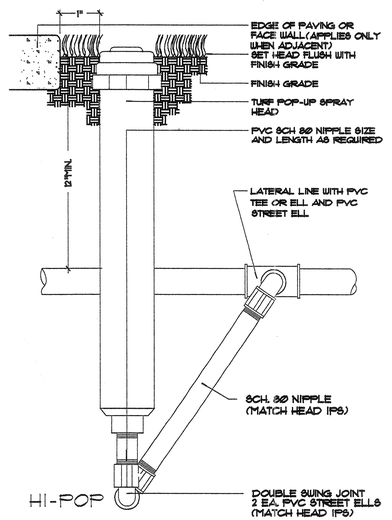

D GEAR-DRIVEN ROTORS

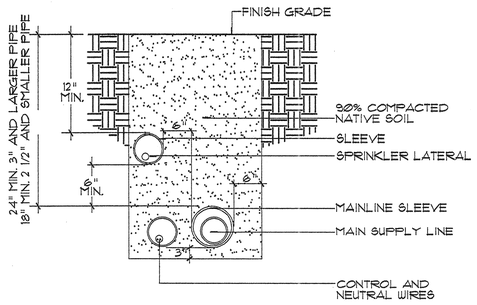

E SLEEVING

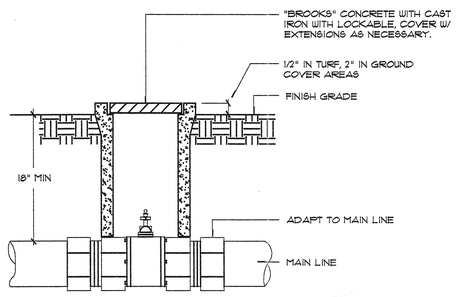

F GATE VALVE

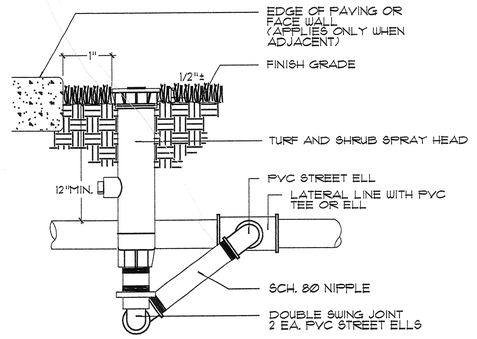

A TURF AND SHRUB SRAY HEAD

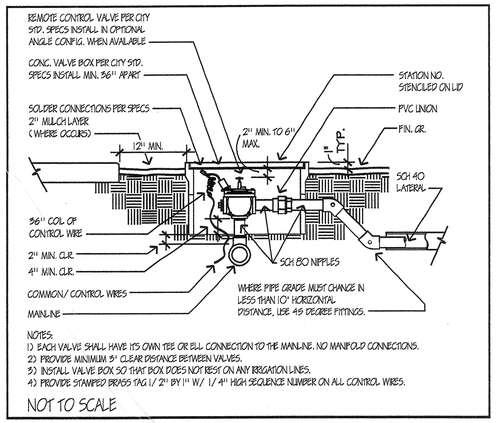

NOTES:
1) EACH VALVE SHALL HAVE ITS OWN TEE OR ELL CONNECTION TO THE MAINLINE. NO MANIFOLD CONNECTIONS.
2) PROVIDE MINIMUM 3" CLEAR DISTANCE BETWEEN VALVES.
3) INSTALL VALVE BOX SO THAT BOX DOES NOT REST ON ANY IRRIGATION LINES.
4) PROVIDE STAMPED BRASS TAG 1/2" BY 1" W/ 1/4" HIGH SEQUENCE NUMBER ON ALL CONTROL WIRES.

NOT TO SCALE

Approved	Date	Park and Recreation Department CITY OF RIVERSIDE	Detail No.
BJ	06/21/02	REMOTE CONTROL VALVE	4030
Revised	Date		

B REMOTE CONTROL VALVE

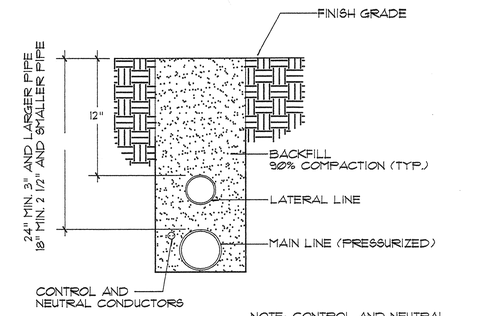

NOTE: CONTROL AND NEUTRAL CONDUCTORS SHALL BE INSTALLED WITH A MINIMUM OF 18" EARTH COVER

IRRIGATION PIPING TO BE SLEEVED UNDER ALL HARDSCAPE AREAS

SLEEVING TO BE INSTALLED WITH A MINIMUM OF 24" EARTH COVER

C TRENCHING

PROJECT ARCHITECT •
KROHI BROESKE ARCHITECTS
6150 BROCKTON AVE. SUITE 202
RIVERSIDE, CA. 92506-2228
TEL 909-788-5940
FAX 909-788-1365
E-MAIL: KBA@KROHIBROESKE.COM

CONSULTANTS •
Mechanical Engineering
Advanced Environmental Engineering
4056 Willowarr Drive
Irvine, CA 92620
PH. 949.551.9393
FAX 949.551.9393

Electrical Engineering
Consolidated Engineering
1691 Mylet Road, Suite C
Tustin, CA 92780
PH. 714. 832-6346
FAX 714. 832-9427

Landscape Architecture
RHA Landscape Architects - Planning, Inc.
3612 Mission Inn Avenue
Riverside, CA 92501
PH. 909.781.1930
FAX 909.686.8091

PROJECT •

REGISTERED LANDSCAPE ARCHITECT — RANDOLPH HILVERT HASTEN — Signature 7/31/05 Renewal Date — Date — STATE OF CALIFORNIA

VILLEGAS GYM EXPANSION
7240 MARGUERITA AVE.
RIVERSIDE, CA. 92504

REVISION •

THIS DRAWING AND THE DESIGNS, ARRANGEMENTS, DEPICTIONS, CONCEPTS AND OTHER INFORMATION CONTAINED HEREIN CONSTITUTE UNPUBLISHED WORK OF KROHI/BROESKE ARCHITECTS AND SHALL REMAIN PROPERTY OF KROHI/BROESKE ARCHITECTS IN PERPETUITY. NO PART THEREOF SHALL BE REPRODUCED, COPIED, DISCLOSED, DISTRIBUTED, SOLD, PUBLISHED OR OTHERWISE USED IN ANYWAY WITHOUT THE ADVANCE EXPRESS WRITTEN CONSENT OF KROHI/BROESKE ARCHITECTS. VISUAL CONTACT WITH THE ABOVE DRAWINGS, OR ANY PART THEREOF, SHALL CONSTITUTE CONCLUSIVE EVIDENCE OF ACCEPTANCE OF THESE RESTRICTIONS.

SHEET TITLE •

IRRIGATION DETAIL

DRAWN • FB
CHECKED •
SCALE • N.T.S.
DATE • 10-1-03
JOB • 03129
SHEET •
ID-1

[One Inch on Original Sheet] Drawing File: F:\03129\Villegas Gym Expansion\03129ID Dec 03, 2003 - 10:28am

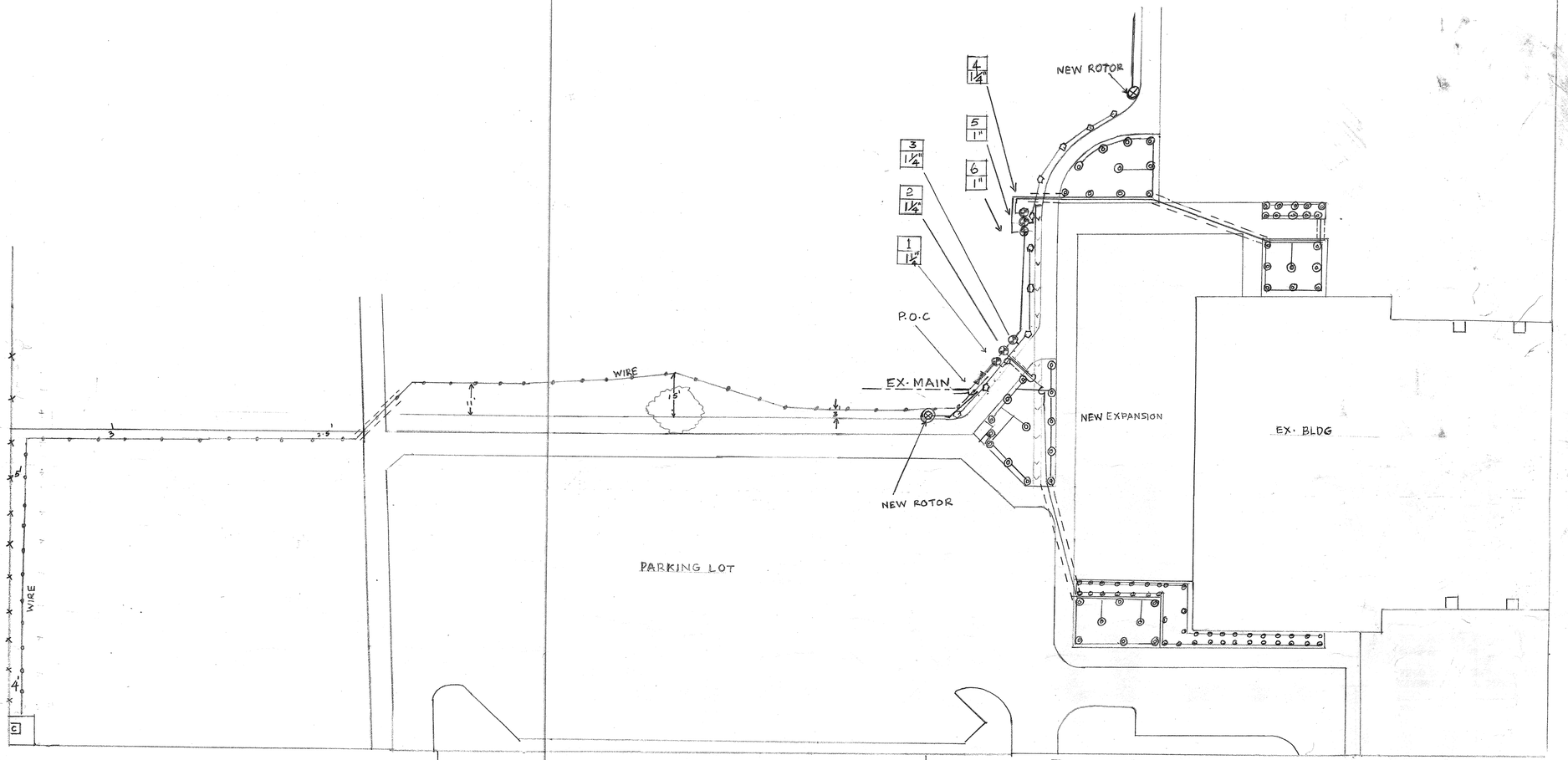

IRRIGATION LEGEND

SYMBOL	DESCRIPTION	MODEL	
	REMOTE CONTROL VALVE	GRISWOLD	2000
C	CONTROLLER	RAINBIRD	ESP-6
	GATE VALVE	NIBCO	T-580
	MAIN LINE		SCH 40-2"
	LATERAL LINE		SCH 40-1",¾"
	ELECTRICAL WIRE		#14, #12
	SPRINKLER HEAD	RAINBIRD	1806-SAM-PRS
	DO	DO	1812-SAM-PRS
	DO	TORO	300 SERIES
	DO (EX. SYSTEM)	HUNTER	I-40
	DO (EX. SYSTEM)	RAINBIRD	300 SERIES
	SLEEVES		SCH 40-2"
	EX. MAIN LINE		SCH 40-2½"

N

VILLEGAS GYM EXPANSION

7240, MAGUERITA AVE, RIVERSIDE CA 92504

AS BUILT PLAN

PREPARED BY	RANJITH RANASINGHE
CHECKED BY	
APPROVED BY	
SCALE	1"-20'
DATE	05-05-05
JOB	03129

	EXISTING MAINLINE	
	NEW SCH 40 PVC MAINLINE. SIZE PER PLAN	"C"/ID-1

MINIMUM PLUMBING FIXTURES (UBC TABLE A-29-A)				
OCCUPANT TYPE	AREA (S.F.)	OCCUPANT LOAD	TOILET (MALE/FEMALE)	LAVATORY (MALE/FEMALE)
GROUP A	NEW + EXISTING = 16,988 S.F.	AREA/30 S.F./OCC. = 566	4/4	2/2
GROUP B	EXISTING = 2,659 S.F.	AREA/200 S.F./OCC. = 13	1/1	1/1
TOTAL (REQUIRED) TOTAL (PROVIDED)			5/5 8/8	3/3 5/5
TOTAL HANDICAP ACCESSIBLE PUMBING FIXTURES (REQUIRED) TOTAL HANDICAP ACCESSIBLE PLUMBING FIXTURES (PROVIDED)			1/1 1/1	1/1 1/1

OCCUPANCY USE AND LOAD SCHEDULE (UBC TABLE 10-A)		
NO.	SPACE USE	OCCUPANT LOAD FACTOR (S.F. PER OCC.)
1	ASSEMBLY AREA (CONCENTRATED USE)	7
2	KITCHEN (COMMERCIAL)	200
3	OFFICES	100
4	UTILITY ROOM	300
5	STORAGE ROOM	300
6	TOILET OR SHOWER ROOM	0 (ACCESSORY USE SPACE)
7	ALL OTHERS	100
8	CORRIDOR OR VESTIBULE	0 (ACCESSORY USE SPACE)
9	LOBBY	7
10	GYMNASIUM	15

MINIMUM EGRESS WIDTH (UBC TABLE 10-B)

EXISTING: 14 DOOR X 36"/DOOR = 504" (ACTUAL)
0.2"/OCC. X 1404 OCC. = 280.8" (REQUIRED)
ACTUAL > REQUIRED.
PROPOSED: 4 DOOR X 36"/DOOR = 144" (ACTUAL)
0.2"/OCC. X 691 OCC. = 138.2" (REQUIRED)
ACTUAL > REQUIRED.

SYMBOLS LEGEND

- 9 / 763 / 109 — OCCUPANT TYPE / ROOM AREA (S.F.) / OCCUPANT LOAD
- 118 — # OF OCCUPANTS
- EXIT
- EXIT PATH
- LIMITED SCOPE OF WORK - AS INDICATED
- SCOPE OF WORK

PROPOSED ADDITION (SCOPE OF WORK) | EXISTING BUILDING (NO WORK)

WOMEN & MEN A.D.A. COMPLIANT RESTROOM

Existing fire hose cabinet to remain.

Existing fire hose cabinet to remain.

ACTUAL ~~EXPOSED~~ location of fire riser, coordinate exact location with city during construction.

PROPOSED ADDITION (SCOPE OF WORK) | EXISTING BUILDING (NO WORK)

Overall Floor Plan
1/8" = 1'-0"

PROJECT ARCHITECT
KROHIBROESKE ARCHITECTS
6180 BROCKTON AVE. SUITE 202
RIVERSIDE, CA. 92506-2228
TEL 909-788-5940
FAX 909-788-1365
E-MAIL: KBA@KROHIBROESKE.COM

CONSULTANTS

PROJECT

LICENSED ARCHITECT JAMES L. BROESKE No. C009174 Ren. 11-30-2003 STATE OF CALIFORNIA

VILLEGAS GYM EXPANSION

7240 MARGUERITA AVE.
RIVERSIDE, CA. 92504

REVISION
- 01-28-03 1st PLAN CHECK REVISIONS
- 04-16-03 2nd PLAN CHECK REVISIONS
- 04-16-03 OWNER REQUESTED REVISIONS
- 05-12-03 3rd PLAN CHECK REVISIONS
- 06-12-03 PROJECT REVISIONS

THIS DRAWING AND THE DESIGNS, ARRANGEMENTS, DEPICTIONS, IDEAS AND OTHER INFORMATION CONTAINED HEREIN CONSTITUTE UNPUBLISHED WORK OF KROHIBROESKE ARCHITECTS AND SHALL REMAIN PROPERTY OF KROHI BROESKE ARCHITECTS IN PERPETUITY. NO PART THEREOF SHALL BE REPRODUCED, COPIED, DISCLOSED, DISTRIBUTED,SOLD, PUBLISHED OR OTHERWISE USED WITHOUT THE PRIOR EXPRESS WRITTEN CONSENT OF KROHI BROESKE ARCHITECTS. VERBAL CONTACT WITH THE ABOVE OWNERS OR ANY PART THEREOF, SHALL CONSTITUTE CONCLUSIVE EVIDENCE OF ACCEPTANCE OF THESE RESTRICTIONS.

SHEET TITLE

OVERALL FLOOR PLAN OCCUPANT LOAD AND EXIT

DRAWN	P. JARAMILLO
CHECKED	J. BROESKE
SCALE	1/8" = 1'-0"
DATE	12-20-02
JOB	02029
SHEET	1

A2.0

BID NO. 6099

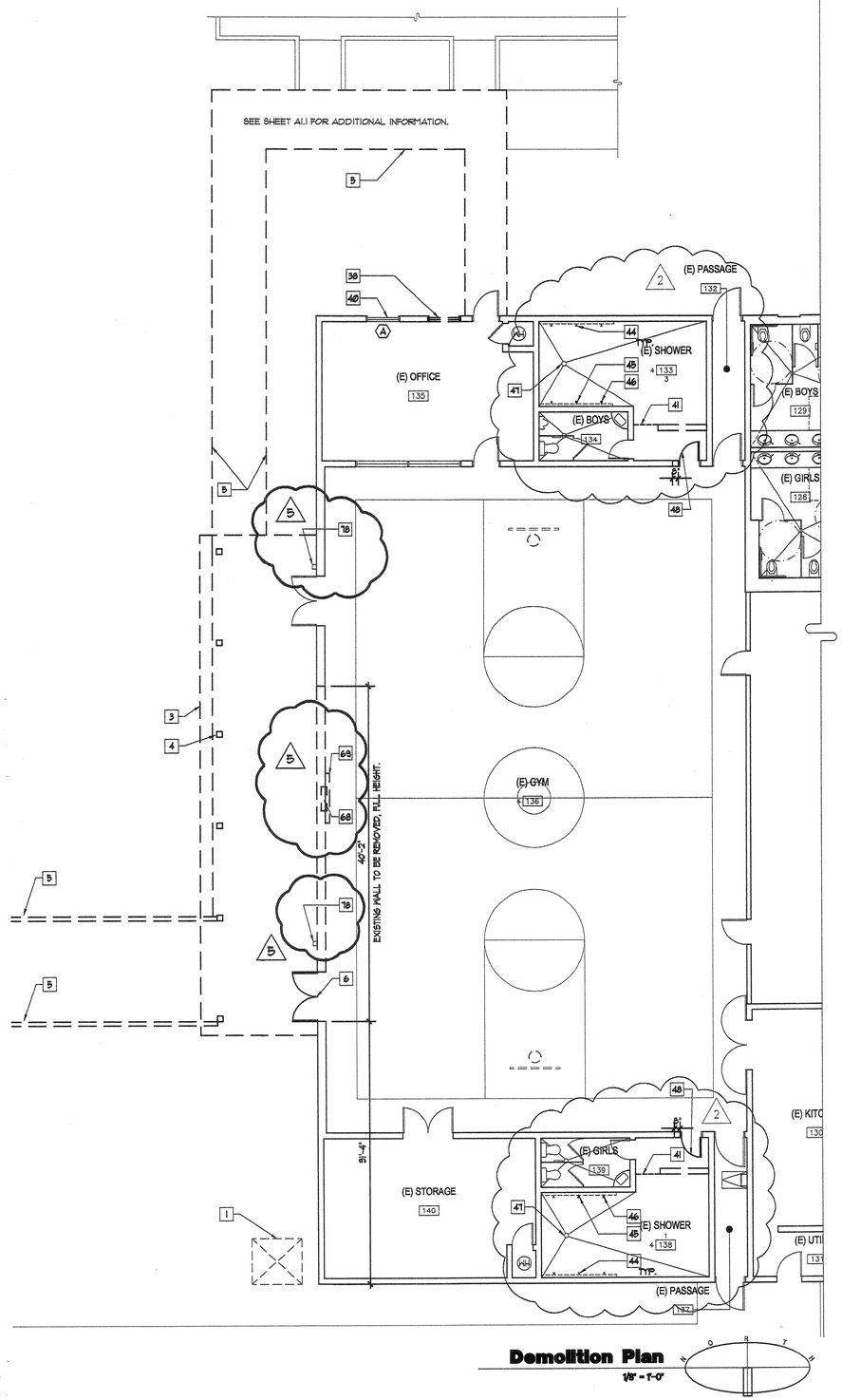

Demolition Plan

1/8" = 1'-0"

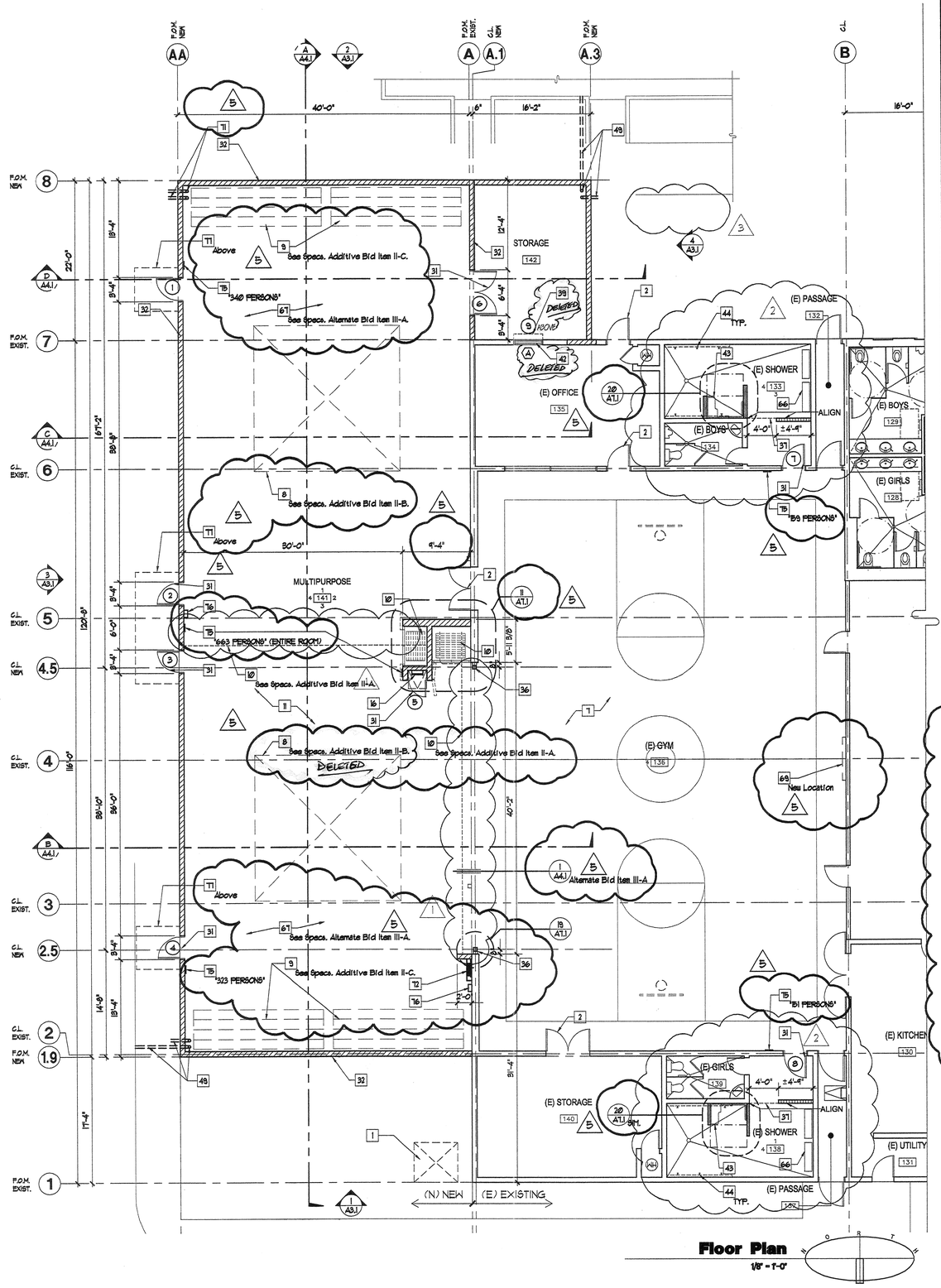

Floor Plan

1/8" = 1'-0"

KEY NOTES

1. (E) Electrical equipment to remain, protect in place.
2. (E) Door to remain, protect in place.
3. (E) Edge of canopy above to be removed.
4. (E) Columns to be removed.
5. (E) Concrete sidewalk to be removed.
6. (E) Door to be removed.
7. (E) Hardwood floor to remain, protect in place. Remove, patch, repair, and/or replace hardwood floor as needed.
8. (N) Boxing ring. See specifications, Additive Bid II-B.
9. (N) Relocatable bleacher seating. See specifications, Additive Bid II-C.
10. (N) Folding panel doors. See specifications, Additive Bid II-A.
11. (N) Concrete slab w/ vapor barrier over 2" sand, See structural drawings.
12. (E) Roof to remain, protect in place.
13. (E) Parapet to remain, protect in place.
14. (E) Plywood cricket to remain, protect in place.
15. (E) Scupper to remain, protect in place.
16. (N) Roof hatch w/ access ladder.
17. (N) Roof drain and overflow, See detail 10/A7.1.
18. (N) Roof access ladder.
19. (N) Plywood cricket.
20. (N) Walk-boards, add as required to provide path to service roof mounted equipment.
21. (N) Fiber cant strip.
22. (E) Mechanical equipment, See mechanical drawings.
23. (N) Mechanical equipment, See mechanical drawings. All mechanical ductwork to be painted, See specs.
24. (N) Built-up roofing over (N) Roof sheathing per structural plans.
25. (E) Gypsum board ceiling to remain, protect in place. Patch and repair as needed, paint to match existing.
26. (E) Exposed roof framing members.
27. (E) Electrical fixtures.
28. (N) Electrical fixtures, See electrical drawings.
29. (E) Parapet and cricket to be removed, sheet flow (E) roof to (N) lower roof, See section B/AA.1
30. (N) Wood fascia and trim to match existing, See details 8/A7.1.
31. (N) Door per schedule.
32. (N) Masonry wall to match existing 8"x6"x16" slump block, See structural plans. Paint finish, See specs.
33. (N) Roof framing per structural plans.
34. (N) Concrete footing per structural plans.
35. (N) Wall mounted acoustical panels, See details 5,6, 9/A7.1 and specs.
36. (N) Steel column/beam per structural plans.
37. Provide (N) plaster soffit @ 8'-0" A.F.F., align with existing ceiling. Field verify existing ceiling height. Patch, repair, replace, and paint adjacent areas as needed.
38. (E) Window to be removed. Patch and repair opening with similar material and paint color of adjacent exterior and interior surfaces.
39. (N) Ceiling door to be placed over existing window, See window schedule.
40. (E) Window. Remove security bars and window, patch and repair as needed to receive new window.
41. (E) Soffit to be removed.
42. (N) Pass-thru window, See window schedule.
43. (N) H.C. shower stall per A.D.A. guidelines, See detail 4/A7.2.
44. (E) Shower heads w/ control valves, typical.
45. (E) Shower head w/ control valve(s) to be capped.
46. (E) Shower head w/ control valve(s) to be removed and modify plumbing to accommodate H.C. shower stall accessories per A.D.A. guidelines, See plumbing drawings and detail 4/A7.2.
47. (E) Floor drain to remain, protect in place.
48. (E) Door to be removed. Modify existing opening to receive a 3'-0" x 7'-0" door plus frame, See door schedule.
49. (N) Roof drain and overflow down pipes. Roof drain to daylight at nearest curb and overflow drain to daylight at wall 6" above finish paving/grade, See plumbing drawings.
50. (E) Full height ceramic tile, protect in place. Patch and repair as needed.
51. (N) Partial height wall per wall legend.
52. (N) Ceramic tile to match existing.
53. (N) Wall per wall legend.
54. (N) Roof vent. Empire model TV12G, turbine type,1200 c.f.m. at 4 mi. wind, externally braced, bronze oil impregnated bottom thrust-type ball bearing, galvanized steel construction, (GRAINGER STOCK NO. 2C631).
55. Remove and replace wall tile as required to install plumbing.
56. (N) Partial height end-wall post with ceramic tile all around to match existing color and pattern.
57. (E) Tectum acoustical panels to remain, cut and remove portion of panels to enable new construction. Remove and replace as needed.
58. (N) 5/8" Gyp. Bd. type "X", prep and paint exposed surfaces.
59. (E) C.M.U. wall to remain, protect in place. Patch, repair, and paint areas as needed.
60. Rework (E) cricket as required to maintain adequate drainage.
61. Remove, replace, and/or repair (E) roofing and sub roofing as required to maintain adequate drainage.
62. (N) Splash guard, See specs.
63. (N) Soffit, paint finish.
64. (N) Ceiling mounted acoustical panels, See details 5 or 9/A7.1 and specs.
65. Patch, repair, replace, and/or paint as needed where existing and new construction occurs.
66. (N) Bench to be provided by owner.
67. (N) VCT Flooring - Base Bid.
    (N) Wood Flooring - Alternate Bid III-A.
68. Remove existing fire hose cabinet and cap pipe.
69. (E) Scoreboard to be relocated to East wall of room 136.
70. Provide new Tectum acoustical wall panel, match existing type and color.
71. (N) Roof drain and overflow down pipes to daylight at wall 6" above finish paving/grade, See plumbing drawings.
72. (N) Furr-out wall for installation of electrical panel. Provide metal studs and 5/8" gyp. bd. from floor to roof structure.
73. (N) Ceiling mounted acoustical panels per detail 12/A7.1.
74. (N) 12" high formed plastic address letters.
75. Occupancy signage: Seton Sign Co. 256XX silk screened letters on the back of clear acrylic face. Size 3"X12". Provide at locations indicated.
76. Fire Ext. and Cabinet: Larson Industries, surface mounted steel cabinet, full glass with Larson-Loc, and 2A10BC extinguisher.
77. (N) Steel canopy per detail 1/A7.2.
78. (E) Existing speaker to be relocated as directed by Architect.

Legend

- (E) WALL TO REMAIN.
- (N) 8" CMU WALL.
- (N) 2"X METAL STUDS @ 16" O.C. WITH WATER PROOF GYPSUM BOARD AND CERAMIC TILE TO MATCH EXISTING. PAINT FINISH TO MATCH EXISTING ON NON-CERAMIC TILE SURFACES WHERE OCCURS.
- (N) 2"X METAL STUDS @ 16" O.C. WITH WATER PROOF GYPSUM BOARD AND CERAMIC TILE TO MATCH EXISTING.
- EXISTING IMPROVEMENTS TO BE DEMOLISHED.

PROJECT ARCHITECT

KROHI BROESKE ARCHITECTS

6180 BROCKTON AVE. SUITE 202

RIVERSIDE, CA. 92506-2228

TEL 909-788-5940

FAX 909-788-1365

E-MAIL: KBA@KROHIBROESKE.COM

CONSULTANTS

PROJECT

LICENSED ARCHITECT
JAMES L. BROESKE
No. C009174
Ren. 11-30-2003
STATE OF CALIFORNIA

VILLEGAS GYM EXPANSION

7240 MARGUERITA AVE.
RIVERSIDE, CA. 92504

REVISION

- 01-28-03 1st PLAN CHECK REVISIONS
- 04-18-03 2nd PLAN CHECK REVISIONS
- 04-18-03 OWNER REQUESTED REVISIONS
- 05-12-03 3rd PLAN CHECK REVISIONS
- 06-12-03 PROJECT REVISIONS

THIS DRAWING AND THE DESIGNS, ARRANGEMENTS, DEPICTIONS, IDEAS AND OTHER INFORMATION CONTAINED HEREIN CONSTITUTE UNPUBLISHED WORK OF KROHI/BROESKE ARCHITECTS AND SHALL REMAIN PROPERTY OF KROHI/ BROESKE ARCHITECTS IN PERPETUITY. NO PART THEREOF SHALL BE REPRO-DUCED, COPIED, DISCLOSED, DISTRIBUTED, OR USED IN ANY MANNER WHATSOEVER WITHOUT THE PRIOR EXPRESS WRITTEN CONSENT OF KROHI/BROESKE ARCHITECTS. VISUAL CONTACT WITH THE ABOVE DRAWINGS, OR ANY PART THEREOF, SHALL CONSTITUTE CONCLUSIVE EVIDENCE OF AC-CEPTANCE OF THESE RESTRICTIONS.

SHEET TITLE

DEMOLITION PLAN AND FLOOR PLAN

DRAWN	P. JARAMILLO
CHECKED	J. BROESKE
SCALE	1/8" = 1'-0"
DATE	12-20-02
JOB	02029
SHEET	

A2.1

BID NO. 6099

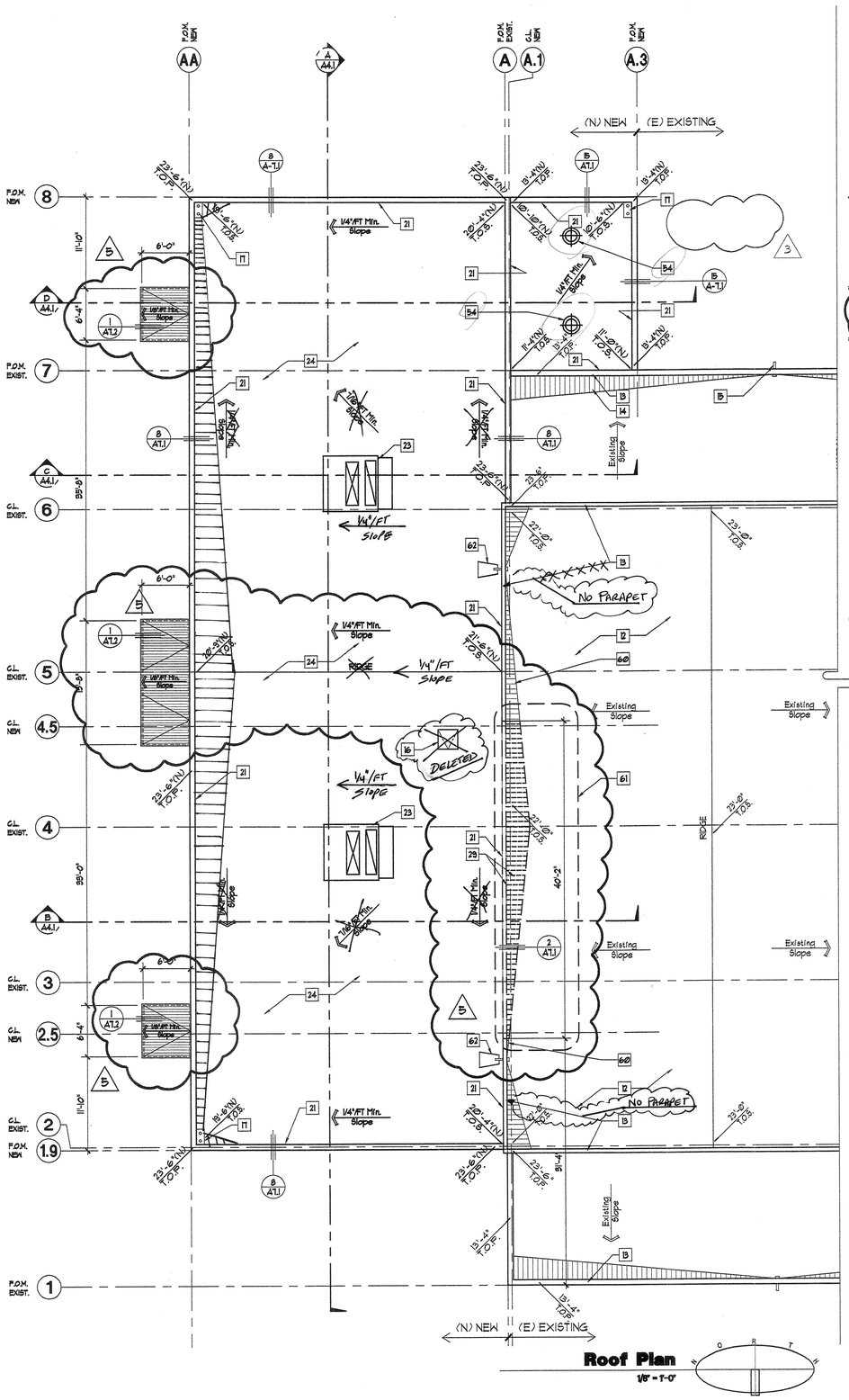

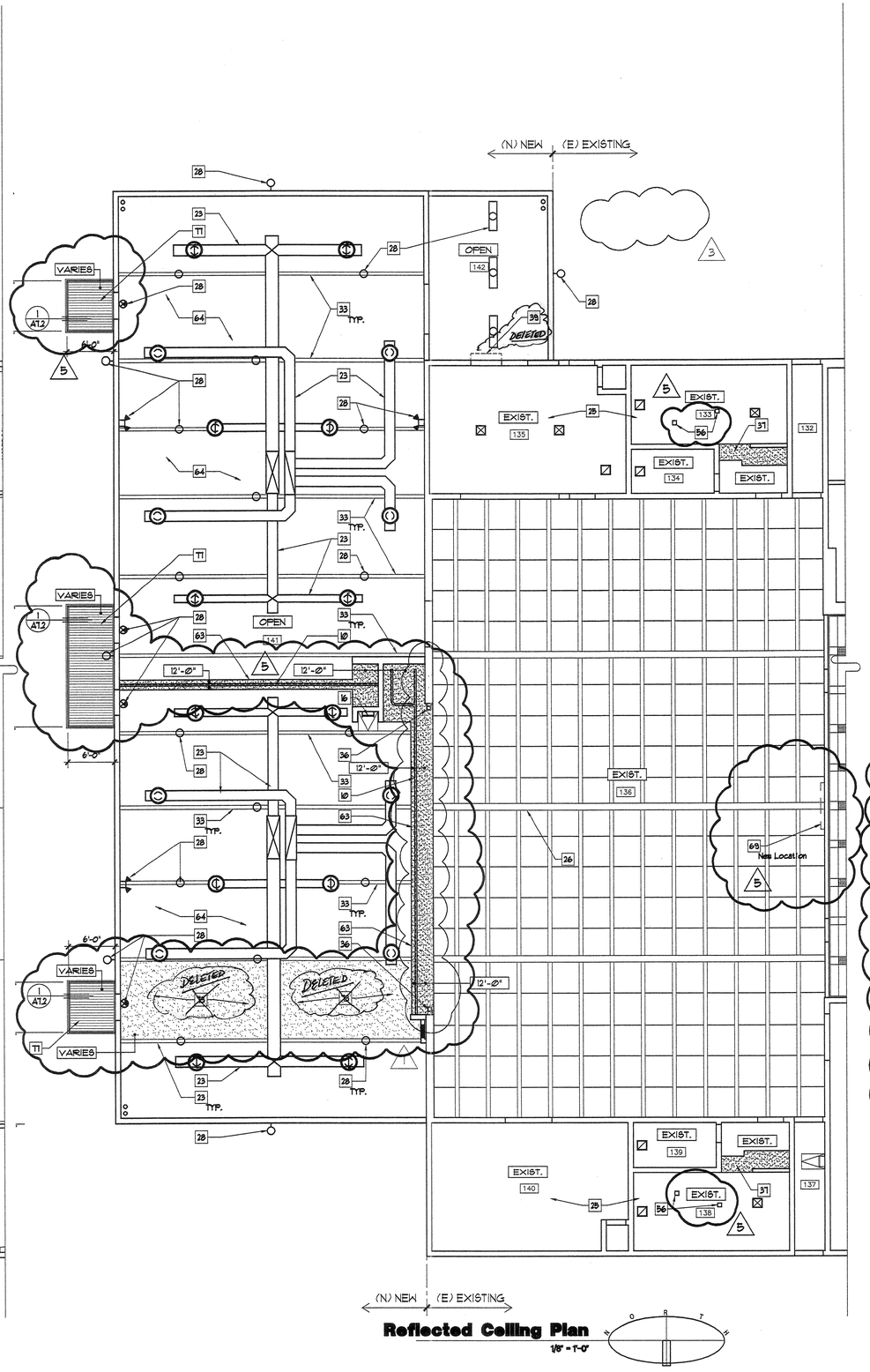

KEY NOTES

1. (E) Electrical equipment to remain, protect in place.
2. (E) Door to remain, protect in place.
3. (E) Edge of canopy above to be removed.
4. (E) Columns to be removed.
5. (E) Concrete sidewalk to be removed.
6. (E) Door to be removed.
7. (E) Hardwood floor to remain, protect in place. Remove, patch, repair, and/or replace hardwood floor as needed.
8. (N) Boxing ring. See specifications, Additive Bid II-B.
9. (N) Relocatable bleacher seating. See specifications, Additive Bid II-C.
10. (N) Folding panel doors. See specifications, Additive Bid II-A.
11. (N) Concrete slab w/ vapor barrier over 2" sand, See structural drawings.
12. (E) Roof to remain, protect in place.
13. (E) Parapet to remain, protect in place.
14. (E) Plywood cricket to remain, protect in place.
15. (E) Scupper to remain, protect in place.
16. (N) Roof hatch w/ access ladder.
17. (N) Roof drain and overflow, See detail 10/A7.1.
18. (N) Roof access ladder.
19. (N) Plywood cricket.
20. (N) Walk-boards, add as required to provide path to service roof mounted equipment.
21. (N) Fiber cant strip.
22. (E) Mechanical equipment, See mechanical drawings.
23. (N) Mechanical equipment, See mechanical drawings. All mechanical ductwork to be painted, See specs.
24. (N) Built-up roofing over (N) Roof sheathing per structural plans.
25. (E) Gypsum board ceiling to remain, protect in place. Patch and repair as needed, paint to match existing.
26. (E) Exposed roof framing members.
27. (E) Electrical fixtures.
28. (N) Electrical fixtures, See electrical drawings.
29. (E) Parapet and cricket to be removed, sheet flow (E) roof to (N) lower roof, See section B/A4.1
30. (N) Wood fascia and trim to match existing, See details 8/A7.1.
31. (N) Door per schedule.
32. (N) Masonry wall to match existing 8"x8"x16" slump block, See structural plans. Paint finish, See specs.
33. (N) Roof framing per structural plans.
34. (N) Concrete footing per structural plans.
35. (N) Wall mounted acoustical panels, See details 5,6, 9/A7.1 and specs.
36. (N) Steel column/beam per structural plans.
37. Provide (N) plaster soffit @ 8'-0" A.F.F., align with existing ceiling. Field verify existing ceiling height. Patch, repair, replace, and paint adjacent areas as needed.
38. (E) Window to be removed. Patch and repair opening with similar material and paint color of adjacent exterior and interior surfaces.
39. (N) Coiling door to be placed over existing window, See window schedule.
40. (E) Window. Remove security bars and window, patch and repair as needed to receive new window.
41. (E) Soffit to be removed.
42. (N) Pass-thru window, See window schedule.
43. (N) H.C. shower stall per A.D.A. guidelines, See detail 4/A7.2.
44. (E) Shower heads w/ control valves, typical.
45. (E) Shower head w/ control valve(s) to be capped.
46. (E) Shower head w/ control valve(s) to be removed and modify plumbing to accommodate H.C. shower stall accessories per A.D.A. guidelines, See plumbing drawings and detail 4/A7.2.
47. (E) Floor drain to remain, protect in place.
48. (E) Door to be removed. Modify existing opening to receive a 3'-0" x 7'-0" door plus frame, See door schedule.
49. (N) Roof drain and overflow down pipes. Roof drain to daylight at nearest curb and overflow drain to daylight at wall 6" above finish paving/grade, See plumbing drawings.
50. (E) Full height ceramic tile, protect in place. Patch and repair as needed.
51. (N) Partial height wall per wall legend.
52. (N) Ceramic tile to match existing.
53. (N) Wall per wall legend.
54. (N) Roof vent. Empire model TV12G, turbine type,1200 c.f.m. at 4 mi. wind, externally braced, bronze oil impregnated bottom thrust-type ball bearing, galvanized steel construction, (GRAINGER STOCK NO. 20C31).
55. Remove and replace wall tile as required to install plumbing.
56. (N) Partial height end-wall post with ceramic tile all around to match existing color and pattern.
57. (E) Tectum acoustical panels to remain, cut and remove portion of panels to enable new construction. Remove and replace as needed.
58. (N) 5/8" Gyp. Bd. type "X", prep and paint exposed surfaces.
59. (E) C.M.U. wall to remain, protect in place. Patch, repair, and paint areas as needed.
60. Rework (E) cricket as required to maintain adequate drainage.
61. Remove, replace, and/or repair (E) roofing and sub roofing as required to maintain adequate drainage.
62. (N) Splash guard. See spec.
63. (N) Soffit, paint finish.
64. (N) Ceiling mounted acoustical panels, See details 5 or 9/A7.1 and specs.
65. Patch, repair, replace, and/or paint as needed where existing and new construction occurs.
66. (N) Bench to be provided by owner.
67. (N) VCT Flooring - Base Bid.
    (N) Wood Flooring - Alternate Bid III-A.
68. Remove existing fire hose cabinet and cap pipe.
69. (E) Scoreboard to be relocated to East wall of room 136.
70. Provide new Tectum acoustical wall panel, match existing type and color.
71. (N) Roof drain and overflow down pipes to daylight at wall 6" above finish paving/grade, See plumbing drawings.
72. (N) Furr-out wall for installation of electrical panel. Provide metal studs and 5/8" gyp. bd. from floor to roof structure.
73. (N) Ceiling mounted acoustical panels per detail 12/A7.1.
74. (N) 12" high formed plastic address letters.
75. Occupancy signage: Seton Sign Co. 256XX silk screened letters on the back of clear acrylic face. Size 3"X12". Provide at locations indicated.
76. Fire Ext. and Cabinet: Larson industries, surface mounted steel cabinet, full glass with Larson-Loc, and 2A10BC extinguisher.
77. (N) Steel canopy per detail 1/A7.2.

Legend

- (E) WALL TO REMAIN.
- (N) 8" CMU WALL.
- (N) 2"X METAL STUDS @ 16" O.C. WITH WATER PROOF GYPSUM BOARD AND CERAMIC TILE TO MATCH EXISTING. PAINT FINISH TO MATCH EXISTING ON NON-CERAMIC TILE SURFACES WHERE OCCURS.
- (N) 2"X METAL STUDS @ 16" O.C. WITH WATER PROOF GYPSUM BOARD AND CERAMIC TILE TO MATCH EXISTING.
- EXISTING IMPROVEMENTS TO BE DEMOLISHED.

PROJECT ARCHITECT

KROHI BROESKE ARCHITECTS

6180 BROCKTON AVE. SUITE 202

RIVERSIDE, CA. 92506-2228

TEL 909-788-5940

FAX 909-788-1365

E-MAIL: KBA@KROHIBROESKE.COM

CONSULTANTS

LICENSED ARCHITECT
JAMES L. BROESKE
No. C009174
Ren. 11-30-2003
STATE OF CALIFORNIA

PROJECT

VILLEGAS GYM EXPANSION

7240 MARGUERITA AVE.
RIVERSIDE, CA. 92504

REVISION

- 01-28-03 1st PLAN CHECK REVISIONS
- 04-18-03 2nd PLAN CHECK REVISIONS
- 04-18-03 OWNER REQUESTED REVISIONS
- 05-12-03 3rd PLAN CHECK REVISIONS
- 06-12-03 PROJECT REVISIONS

THIS DRAWING AND THE DESIGNS, ARRANGEMENTS, DEPICTIONS, IDEAS AND OTHER INFORMATION CONTAINED HEREIN CONSTITUTE UNPUBLISHED WORK OF KROHI/BROESKE ARCHITECTS AND SHALL REMAIN PROPERTY OF KROHI BROESKE ARCHITECTS IN PERPETUITY. NO PART THEREOF SHALL BE REPRODUCED, COPIED, DISCLOSED, DISTRIBUTED,SOLD, PUBLISHED OR OTHERWISE USED IN ANYWAY WITHOUT THE ADVANCE EXPRESS WRITTEN CONSENT OF KROHI/BROESKE ARCHITECTS. VISUAL CONTACT WITH THIS ABOVE DRAWINGS, OR ANY PART THEREOF, SHALL CONSTITUTE CONCLUSIVE EVIDENCE OF ACCEPTANCE OF THESE RESTRICTIONS.

SHEET TITLE

ROOF PLAN AND REFLECTED CEILING PLAN

DRAWN	P. JARAMILLO
CHECKED	J. BROESKE
SCALE	1/8" = 1'-0"
DATE	12-20-02
JOB	02029
SHEET	

A2.2

BID NO. 6099

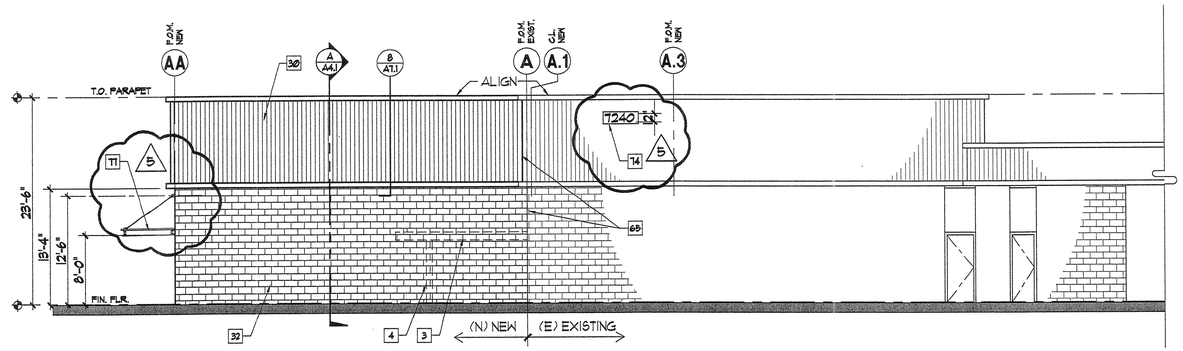

NORTH ELEVATION 1

1/8"=1'-0"

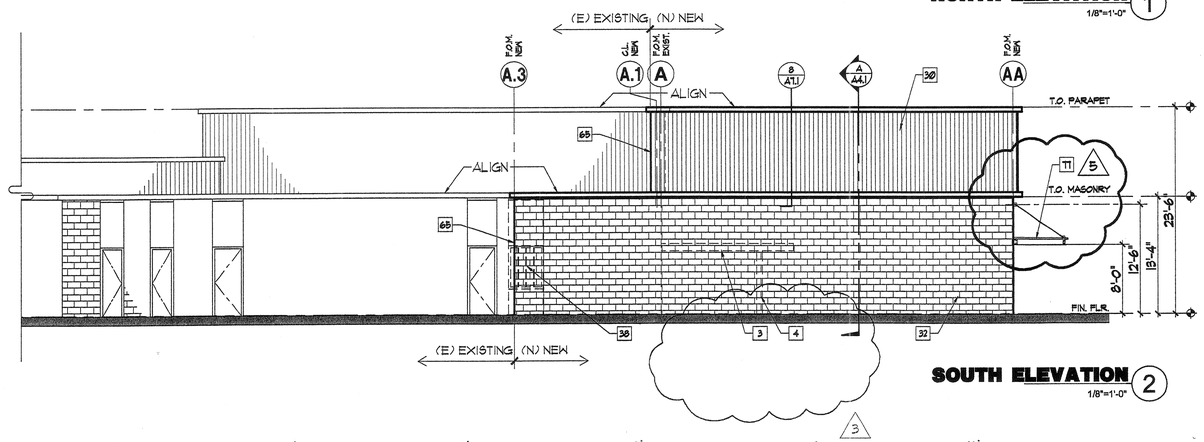

SOUTH ELEVATION 2

1/8"=1'-0"

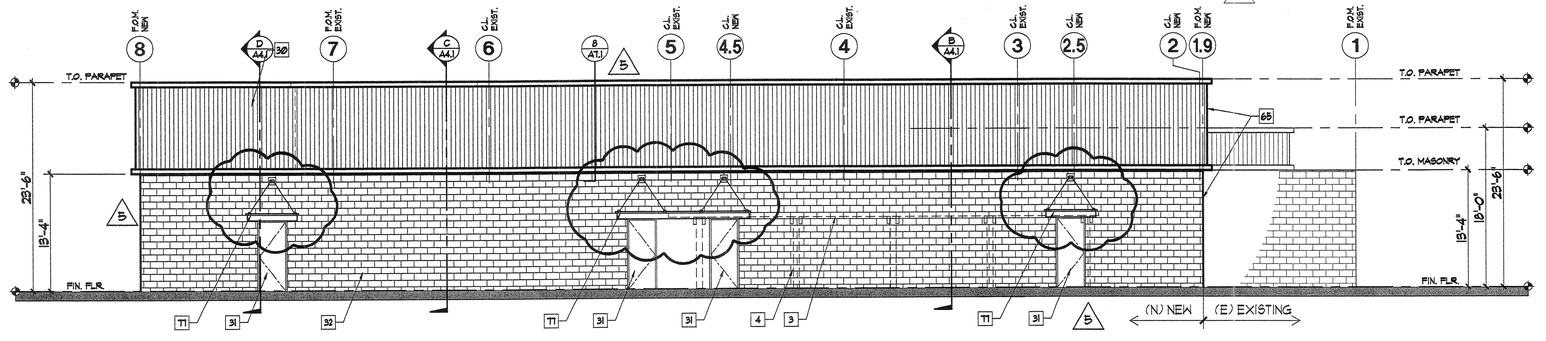

EAST ELEVATION 3

1/8"=1'-0"

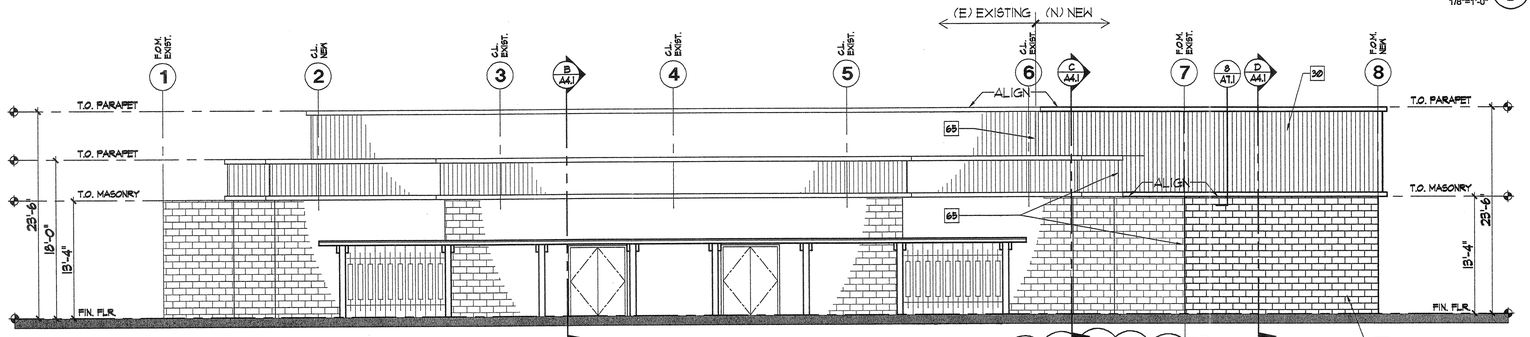

WEST ELEVATION 4

1/8"=1'-0"

KEY NOTES

1. (E) Electrical equipment to remain, protect in place.
2. (E) Door to remain, protect in place.
3. (E) Edge of canopy above to be removed.
4. (E) Columns to be removed.
5. (E) Concrete sidewalk to be removed.
6. (E) Door to be removed.
7. (E) Hardwood floor to remain, protect in place. Remove, patch, repair, and/or replace hardwood floor as needed.
8. (N) Boxing ring. See specifications, Additive Bid II-B.
9. (N) Relocatable bleacher seating. See specifications, Additive Bid II-C.
10. (N) Folding panel doors. See specifications, Additive Bid II-A.
11. (N) Concrete slab w/ vapor barrier over 2" sand, See structural drawings.
12. (E) Roof to remain, protect in place.
13. (E) Parapet to remain, protect in place.
14. (E) Plywood cricket to remain, protect in place.
15. (E) Scupper to remain, protect in place.
16. (N) Roof hatch w/ access ladder.
17. (N) Roof drain and overflow, See detail 10/A7.1.
18. (N) Roof access ladder.
19. (N) Plywood cricket.
20. (N) Walk-boards, add as required to provide path to service roof mounted equipment.
21. (N) Fiber cant strip.
22. (E) Mechanical equipment, See mechanical drawings.
23. (N) Mechanical equipment, See mechanical drawings. All mechanical ductwork to be painted, See specs.
24. (N) Built-up roofing over (N) Roof sheathing per structural plans.
25. (E) Gypsum board ceiling to remain, protect in place. Patch and repair as needed, paint to match existing.
26. (E) Exposed roof framing members.
27. (E) Electrical fixtures.
28. (N) Electrical fixtures, See electrical drawings.
29. (E) Parapet and cricket to be removed, sheet flow (E) roof to (N) lower roof, See section B/A4.1
30. (N) Wood fascia and trim to match existing, See details 8/A7.1.
31. (N) Door per schedule.
32. (N) Masonry wall to match existing 8"x8"x16" slump block, See structural plans. Paint finish, See specs.
33. (N) Roof framing per structural plans.
34. (N) Concrete footing per structural plans.
35. (N) Wall mounted acoustical panels, See details 5,6, 9/A7.1 and specs.
36. (N) Steel column/beam per structural plans.
37. Provide (N) plaster soffit @ 8'-0" A.F.F., align with existing ceiling. Field verify existing ceiling height. Patch, repair, replace, and paint adjacent areas as needed.
38. (E) Window to be removed. Patch and repair opening with similar material and paint color of adjacent exterior and interior surfaces.
39. (N) Coiling door to be placed over existing window, See window schedule.
40. (E) Window. Remove security bars and window, patch and repair as needed to receive new window.
41. (E) Soffit to be removed.
42. (N) Pass-thru window, See window schedule.
43. (N) H.C. shower stall per A.D.A. guidelines, See detail 4/A7.2.
44. (E) Shower heads w/ control valves, typical.
45. (E) Shower head w/ control valve(s) to be capped.
46. (E) Shower head w/ control valve(s) to be removed and modify plumbing to accommodate H.C. shower stall accessories per A.D.A. guidelines, See plumbing drawings and detail 4/A7.2.
47. (E) Floor drain to remain, protect in place.
48. (E) Door to be removed. Modify existing opening to receive a 3'-0" x 7'-0" door plus frame, See door schedule.
49. (N) Roof drain and overflow down pipes. Roof drain to daylight at nearest curb and overflow drain to daylight at wall 6" above finish paving/grade, See plumbing drawings.
50. (E) Full height ceramic tile, protect in place. Patch and repair as needed.
51. (N) Partial height wall per wall legend.
52. (N) Ceramic tile to match existing.
53. (N) Wall per wall legend.
54. (N) Roof vent. Empire model TV12G, turbine type,1200 c.f.m. at 4 mi. wind, externally braced, bronze oil impregnated bottom thrust-type ball bearing, galvanized steel construction, (GRAINGER STOCK NO. 2C031).
55. Remove and replace wall tile as required to install plumbing.
56. (N) Partial height end-wall post with ceramic tile all around to match existing color and pattern.
57. (E) Tectum acoustical panels to remain, cut and remove portion of panels to enable new construction. Remove and replace as needed.
58. (N) 5/8" Gyp. Bd. type "X", prep and paint exposed surfaces.
59. (E) C.M.U. wall to remain, protect in place. Patch, repair, and paint areas as needed.
60. Rework (E) cricket as required to maintain adequate drainage.
61. Remove, replace, and/or repair (E) roofing and sub roofing as required to maintain adequate drainage.
62. (N) Splash guard, See specs.
63. (N) Soffit, paint finish.
64. (N) Ceiling mounted acoustical panels, See details 5 or 9/A7.1 and specs.
65. Patch, repair, replace, and/or paint as needed where existing and new construction occurs.
66. (N) Bench to be provided by owner.
67. (N) VCT Flooring - Base Bid.
    (N) Wood Flooring - Alternate Bid III-A.
68. Remove existing fire hose cabinet and cap pipe.
69. (E) Scoreboard to be relocated to East wall of room 136.
70. Provide new Tectum acoustical wall panel, match existing type and color.
71. (N) Roof drain and overflow down pipes to daylight at wall 6" above finish paving/grade, See plumbing drawings.
72. (N) Furr-out wall for installation of electrical panel. Provide metal studs and 5/8" gyp. bd. from floor to roof structure.
73. (N) Ceiling mounted acoustical panels per detail 13/A7.1.
74. (N) 12" high formed plastic address letters.
75. Occupancy signage: Seton Sign Co. 256XX silk screened letters on the back of clear acrylic face. Size 3"X12". Provide at locations indicated.
76. Fire Ext. and Cabinet: Larson Industries, surface mounted steel cabinet, full glass with Larson-Loc, and 2A10BC extinguisher.
77. (N) Steel canopy per detail 1/A7.2.

PROJECT ARCHITECT •

KROHI BROESKE ARCHITECTS

6180 BROCKTON AVE. SUITE 202

RIVERSIDE, CA. 92506-2228

TEL 909-788-5940

FAX 909-788-1365

E-MAIL: KBA@KROHIBROESKE.COM

CONSULTANTS •

PROJECT •

LICENSED ARCHITECT
JAMES L. BROESKE
No. C009174
Ren. 11-30-2003
STATE OF CALIFORNIA

VILLEGAS GYM EXPANSION

7240 MARGUERITA AVE.
RIVERSIDE, CA. 92504

REVISION •

1	01-28-03 1st PLAN CHECK REVISIONS
2	04-18-03 2nd PLAN CHECK REVISIONS
3	04-18-03 OWNER REQUESTED REVISIONS
4	05-12-03 3rd PLAN CHECK REVISIONS
5	06-12-03 PROJECT REVISIONS

THIS DRAWING AND THE DESIGNS, ARRANGEMENTS, DEPICTIONS, IDEAS AND OTHER INFORMATION CONTAINED HEREIN CONSTITUTE UNPUBLISHED WORK OF KROHI/BROESKE ARCHITECTS AND SHALL REMAIN PROPERTY OF KROHI/BROESKE ARCHITECTS IN PERPETUITY. NO PART THEREOF SHALL BE REPRODUCED, PUBLISHED OR USED IN ANY WAY WITHOUT THE EXPRESS WRITTEN CONSENT AND ASSIGNMENT OF KROHI/BROESKE ARCHITECTS. VISUAL CONTACT WITH THIS ABOVE DRAWINGS OR ANY PART THEREOF, SHALL CONSTITUTE CONCLUSIVE EVIDENCE OF ACCEPTANCE OF THESE RESTRICTIONS.

SHEET TITLE •

ELEVATIONS

DRAWN	• P. JARAMILLO
CHECKED	• J. BROESKE
SCALE	• 1/8" = 1'-0"
DATE	• 12-20-02
JOB	• 02029
SHEET	•

A3.1

BID NO. 6099

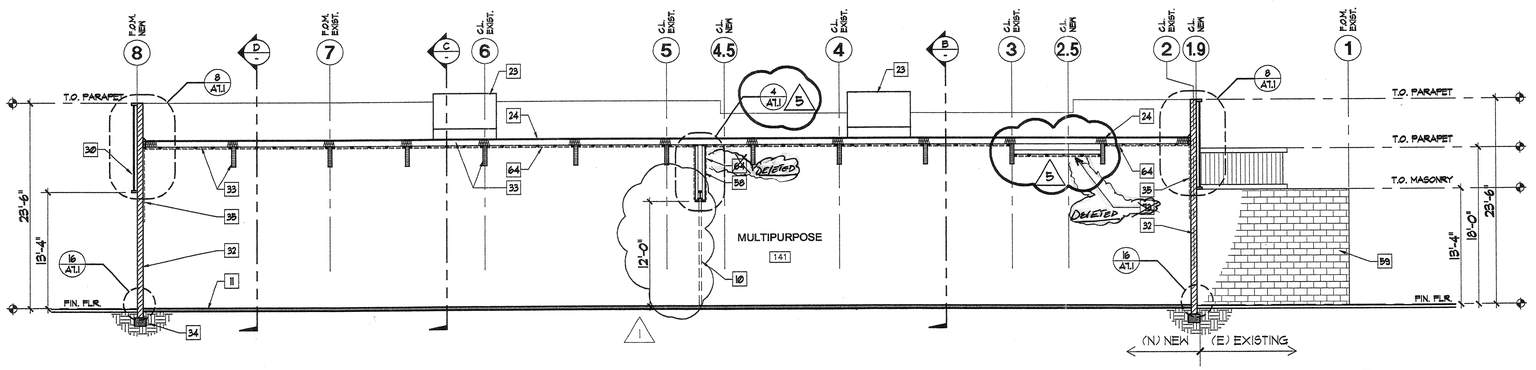

SECTION A
1/8"=1'-0"

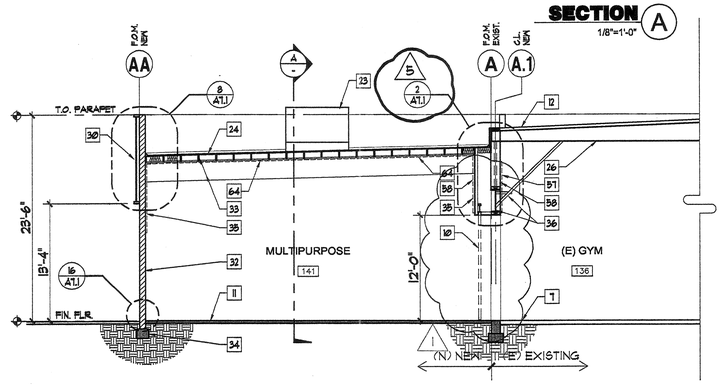

SECTION B
1/8"=1'-0"

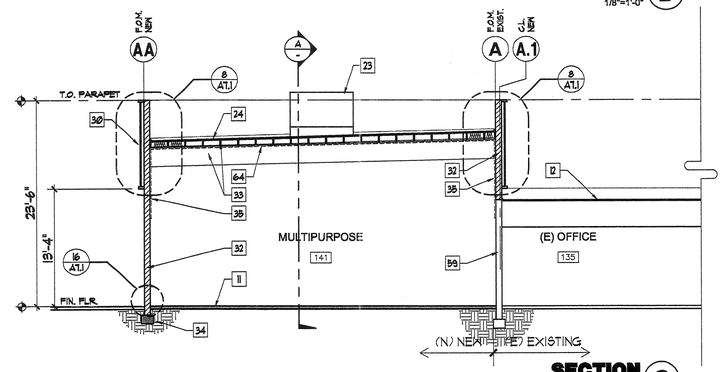

SECTION C
1/8"=1'-0"

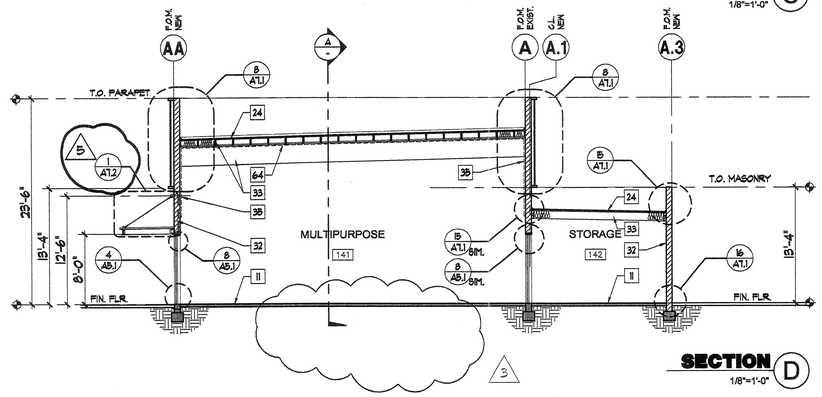

SECTION D
1/8"=1'-0"

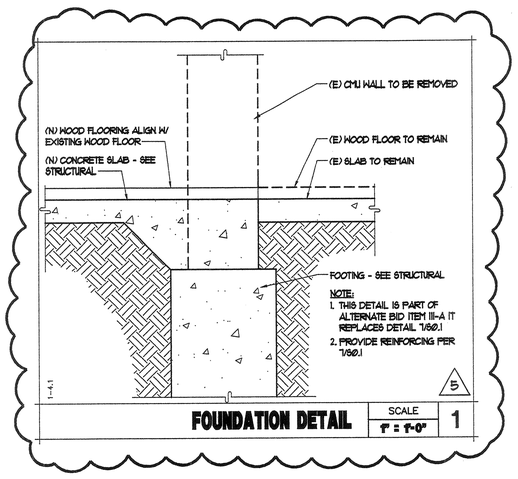

FOUNDATION DETAIL
SCALE 1" = 1'-0" — 1

KEY NOTES

1. (E) Electrical equipment to remain, protect in place.
2. (E) Door to remain, protect in place.
3. (E) Edge of canopy above to be removed.
4. (E) Columns to be removed.
5. (E) Concrete sidewalk to be removed.
6. (E) Door to be removed.
7. (E) Hardwood floor to remain, protect in place. Remove, patch, repair, and/or replace hardwood floor as needed.
8. (N) Boxing ring. See specifications, Additive Bid II-B.
9. (N) Relocatable bleacher seating. See specifications, Additive Bid II-C.
10. (N) Folding panel doors. See specifications, Additive Bid II-A.
11. (N) Concrete slab w/ vapor barrier over 2" sand, See structural drawings.
12. (E) Roof to remain, protect in place.
13. (E) Parapet to remain, protect in place.
14. (E) Plywood cricket to remain, protect in place.
15. (E) Scupper to remain, protect in place.
16. (N) Roof hatch w/ access ladder.
17. (N) Roof drain and overflow, See detail 10/A7.1.
18. (N) Roof access ladder.
19. (N) Plywood cricket.
20. (N) Walk-boards, add as required to provide path to service roof mounted equipment.
21. (N) Fiber cant strip.
22. (E) Mechanical equipment, See mechanical drawings.
23. (N) Mechanical equipment, See mechanical drawings. All mechanical ductwork to be painted, See specs.
24. (N) Built-up roofing over (N) Roof sheathing per structural plans.
25. (E) Gypsum board ceiling to remain, protect in place. Patch and repair as needed, paint to match existing.
26. (E) Exposed roof framing members.
27. (E) Electrical fixtures.
28. (N) Electrical fixtures, See electrical drawings.
29. (E) Parapet and cricket to be removed, sheet flow (E) roof to (N) lower roof, See section B/A4.1
30. (N) Wood fascia and trim to match existing, See details 8/A7.1.
31. (N) Door per schedule.
32. (N) Masonry wall to match existing 8"x8"x16" slump block, See structural plans. Paint finish, See specs.
33. (N) Roof framing per structural plans.
34. (N) Concrete footing per structural plans.
35. (N) Wall mounted acoustical panels, See details 5,6, 9/A7.1 and specs.
36. (N) Steel column/beam per structural plans.
37. Provide (N) plaster soffit @ 8'-0" A.F.F., align with existing ceiling. Field verify existing ceiling height. Patch, repair, replace, and paint adjacent areas as needed.
38. (E) Window to be removed. Patch and repair opening with similar material and paint color of adjacent exterior and interior surfaces.
39. (N) Ceiling door to be placed over existing window, See window schedule.
40. (E) Window. Remove security bars and window, patch and repair as needed to receive new window.
41. (E) Soffit to be removed.
42. (N) Pass-thru window, See window schedule.
43. (N) H.C. shower stall per A.D.A. guidelines, See detail 4/A7.2.
44. (E) Shower heads w/ control valves, typical.
45. (E) Shower head w/ control valve(s) to be capped.
46. (E) Shower head w/ control valve(s) to be removed and modify plumbing to accommodate H.C. shower stall accessories per A.D.A. guidelines, See plumbing drawings and detail 4/A7.2.
47. (E) Floor drain to remain, protect in place.
48. (E) Door to be removed. Modify existing opening to receive a 3'-0" x 7'-0" door plus frame, See door schedule.
49. (N) Roof drain and overflow down pipes. Roof drain to daylight at nearest curb and overflow drain to daylight at wall 6" above finish paving/grade, See plumbing drawings.
50. (E) Full height ceramic tile, protect in place. Patch and repair as needed.
51. (N) Partial height wall per wall legend.
52. (N) Ceramic tile to match existing.
53. (N) Wall per wall legend.
54. (N) Roof vent. Empire model TV12G, turbine type,1200 c.f.m. at 4 mi. wind, externally braced, bronze oil impregnated bottom thrust-type ball bearing, galvanized steel construction, (GRAINGER STOCK NO. 2C531).
55. Remove and replace wall tile as required to install plumbing.
56. (N) Partial height end-wall post with ceramic tile all around to match existing color and pattern.
57. (E) Tectum acoustical panels to remain, cut and remove portion of panels to enable new construction. Remove and replace as needed.
58. (N) 5/8" Gyp. Bd. type "X", prep and paint exposed surfaces.
59. (E) C.M.U. wall to remain, protect in place. Patch, repair, and paint areas as needed.
60. Rework (E) cricket as required to maintain adequate drainage.
61. Remove, replace, and/or repair (E) roofing and sub roofing as required to maintain adequate drainage.
62. (N) Splash guard, See specs.
63. (N) Soffit, paint finish.
64. (N) Ceiling mounted acoustical panels, See details 5 or 9/A7.1 and specs.
65. Patch, repair, replace, and/or paint as needed where existing and new construction occurs.
66. (N) Bench to be provided by owner.
67. (N) VCT Flooring - Base Bid.
    (N) Wood Flooring - Alternate Bid III-A.
68. Remove existing fire hose cabinet and cap pipe.
69. (E) Scoreboard to be relocated to East wall of room 136.
70. Provide new Tectum acoustical wall panel, match existing type and color.
71. (N) Roof drain and overflow down pipes to daylight at wall 6" above finish paving/grade, See plumbing drawings.
72. (N) Furr-out wall for installation of electrical panel. Provide metal studs and 5/8" gyp. bd. from floor to roof structure.
73. (N) Ceiling mounted acoustical panels per detail 19/A7.1.
74. (N) 12" high formed plastic address letters.
75. Occupancy signage: Seton Sign Co. 256XX silk screened letters on the back of clear acrylic face. Size 3"X12". Provide at locations indicated.
76. Fire Ext. and Cabinet: Larson Industries, surface mounted steel cabinet, full glass with Larson-Loc, and 2A10BC extinguisher.
77. (N) Steel canopy per detail 1/A7.2.

NOTE:
ALL NEW ROOF CONSTRUCTION SHALL HAVE R-30 BATT INSULATION.

PROJECT ARCHITECT
KROH | BROESKE ARCHITECTS
6180 BROCKTON AVE. SUITE 202
RIVERSIDE, CA. 92506-2228
TEL 909-788-5940
FAX 909-788-1365
E-MAIL: KBA@KROHBROESKE.COM

CONSULTANTS

PROJECT

LICENSED ARCHITECT
JAMES L. BROESKE
No. C009174
Ren. 11-30-2003
STATE OF CALIFORNIA

VILLEGAS GYM EXPANSION

7240 MARGUERITA AVE.
RIVERSIDE, CA. 92504

REVISION
- 01-28-03 1st PLAN CHECK REVISIONS
- 04-18-03 2nd PLAN CHECK REVISIONS
- 04-18-03 OWNER REQUESTED REVISIONS
- 05-12-03 3rd PLAN CHECK REVISIONS
- 06-12-03 PROJECT REVISIONS

THIS DRAWING AND THE DESIGNS, ARRANGEMENTS, DEPICTIONS, IDEAS AND OTHER INFORMATION CONTAINED HEREIN CONSTITUTE UNPUBLISHED WORK OF KROH/BROESKE ARCHITECTS AND SHALL REMAIN THE PROPERTY OF KROH/BROESKE ARCHITECTS. NO PART THEREOF SHALL BE REPRODUCED, COPIED, DISCLOSED, DISTRIBUTED,SOLD, PUBLISHED OR OTHERWISE USED IN ANYWAY WITHOUT THE ADVANCE EXPRESS WRITTEN CONSENT OF KROH/BROESKE ARCHITECTS. VISUAL CONTACT WITH THE ABOVE DRAWINGS, IN ANY PART THEREOF, SHALL CONSTITUTE CONCLUSIVE EVIDENCE OF ACCEPTANCE OF THESE RESTRICTIONS.

SHEET TITLE

SECTIONS

DRAWN	P. JARAMILLO
CHECKED	J. BROESKE
SCALE	1/8" = 1'-0"
DATE	12-20-02
JOB	02029
SHEET	A4.1

BID NO. 6099

A. EACH SINGLE DOOR TO HAVE:

3	EA.	HINGE	8HBB1279 4545 AMS X ATMS X NRP 626 HAG
1	EA.	EXIT DEVICE	9875L-994L-17 626 VCN
1	EA.	MORTISE CYLINDER	20-001 1-1/4" 626 SCH
1	EA.	LOCK ASTRAGAL	5000 630 TRI
1	EA.	CLOSER	P1461-SPRING-CUSH X TB 689 LCN
1	EA.	HEAD/JAMB SEAL	588D-17 FT BRN PEM
1	EA.	DOOR SWEEP	315CN-36" AL PEM
1	EA.	THRESHOLD	271A-36" MSA AL PEM

B. EACH SINGLE DOOR TO HAVE:

3	EA.	HINGE	8HBB1279 626 HAG
1	EA.	DEADBOLT	B360 626 SCH

C. EACH SINGLE DOOR TO HAVE:

3	EA.	HINGE	BB186B 4545 AMS X ATMS 626 HAG
1	EA.	PUSH PLATE	8201-11 8 X 16 630 TRI
1	EA.	PULL PLATE	8217-3 4 X 16 630 TRI
1	EA.	CLOSER	1461-H X TB 689 LCN
1	EA.	KICKPLATE	K0080 10" X 34" 630 TRI
1	EA.	FLOOR STOP	1211 626 TRI
1	EA.	MEN W/ BRAILLE 12"	MM2E MEN OR WOMEN BLU PCH
1	EA.	MEN W/ CHAIR 6 X 9	MM2E MEN OR WOMEN BLU PCH

D. EACH PAIR OF DOORS TO HAVE:

6	EA.	HINGE	1279 4545 AMS X ATMS 626 HAG
1	EA.	STOREROOM LOCK	AL 80PD 8AT 10-025 X 2-3/4" B.S. 626 SCH
1	EA.	MANUAL FLUSH BOLT ON INACTIVE LEAF	626 SCH
1	EA.	CLOSER P1461 ON ACTIVE LEAF	626 LCN

△5

DOOR TYPES

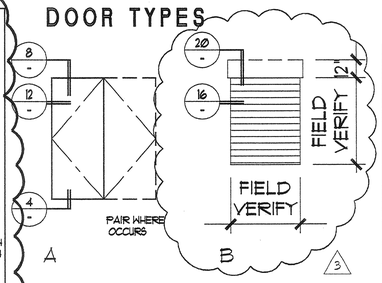

DOOR SCHEDULE

		SIZE		DOOR				FRAME		DETAILS				GROUP	NOTE: FOR HARDWARE GROUP, SEE SPECS.
NO.	TYPE	W	H	THICK.	MATERIAL	FIN.	GLASS	MAT.	FIN.	HEAD	STRIKE	HINGE	SILL	HDWR.	REMARKS
1	A	3'-0"	7'-10"	1 3/4"	H.M.	1	-	STL	1					A	PEEP HOLE
2	A	3'-0"	7'-10"	1 3/4"	H.M.	1	-	STL	1					A	PEEP HOLE
3	A	3'-0"	7'-10"	1 3/4"	H.M.	1	-	STL	1					A	PEEP HOLE
4	A	3'-0"	7'-10"	1 3/4"	H.M.	1	-	STL	1					A	PEEP HOLE
5	A	2'-4"	7'-10"	1 3/4"	H.M.	1	-	STL	1					B	NO HEAD AT FRAME, SEE INTERIOR ELEVATION: 1.5/A6.1
6	A	3'-0"	7'-10"	1 3/4"	H.M.	1	-	STL	1					D	PAIR
7	A	3'-0"	7'-10"	1 3/4"	H.M.	1	-	STL	1					C	
8	A	3'-0"	7'-10"	1 3/4"	H.M.	1	-	STL	1					C	
9	B	4'-0"	5'-0"	-	MTL.	5	-	MTL.	5					-	SECURITY GRATE DOOR

Exit doors shall be openable from the inside without use of a key or any special knowledge or effort. Title 24, Section 1004.3
Width and height of required exit doorways to comply with Title 24, Section 1003.2.
Fire resistive assemblies for protection of openings to comply with Title 24, Sections 302and 713.

DOOR FINISHES

1. PAINT - SEMI-GLOSS
2. FACTORY FINISH

ABBREVIATIONS

CLR. -1/4" CLEAR GLASS
TNT. -1/4" GRAY TINTED GLASS
TMPR. -1/4" TINTED, TEMPERED
D.F. - CLEAR VERTICAL GRAIN
WD. - WOOD/SOLID CORE
P.W. - PAINT GRADE WOOD
S.C. - SELF CLOSER
STL. - STEEL
H.M. - HOLLOW METAL (STEEL)
P.H. - PANIC HARDWARE

FINISH SCHEDULE

ROOM		FLOOR		BASE		WALLS												CEILING			SOFFIT				REMARKS
						1 NORTH			2 EAST			3 SOUTH			4 WEST										
NO.	NAME	MATERIAL	FIN.	MATERIAL	FIN.	MAT'L.		FIN.	MAT'L.		FIN.	MAT'L.		FIN.	MAT'L.		FIN.	MAT'L.	FIN.	HT.	MAT'L.	FIN.	HT.	HT.	
E133	BOYS SHOWER	E		E		E			E			E/CT			E			EP							CT ON NEW WALLS
E134	BOYS	E		E		E			E			E			E			EP							
E135	OFFICE	E		E/RB		MP			MP			MP			MP			EP							PATCH BASE @ NORTH WALL
E136	GYM	E		E		E			E			E			E			E							PAINT EXPOSED FIRE SPRINKLER
E138	GIRLS SHOWER	E		E		E/CT			E			E			E			EP							CT ON NEW WALL
E139	GIRLS	E		E		E			E			E			E			EP							
E140	STORAGE	E		E		E			E			E			E			E							
E141	MULTIPURPOSE	VCT/W		RB		MP			MP			MP			MP			AP/DW							PAINT EXPOSED FIRE SPRINKLER
E142	STORAGE	VCT		RB		MP			MP			MP			MP			-							

ABBREVIATIONS

△5

VCT - VINYL COMPOSITION TILE
RB - 4" RUBBER BASE
CT -CERAMIC TILE
P - PAINT
C.P. - COPPER PANEL
E - EXISTING TO REMAIN
MP - MASONRY, PAINTED
EP - EXISTING FINISH, PAINTED
AP ACOUSTICAL PANEL
W - WOOD FLOOR, ALTERNATE-SEE SPECS.
DW - MECHANICAL DUCWORK, PAINTED

WINDOW TYPES

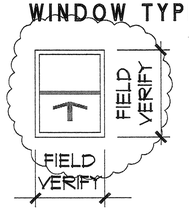

WINDOW SCHEDULE

NO.	TYPE	SIZE WIDTH	SIZE HEIGHT	GLASS THICK.	GLASS FIN.	GLASS TEMP.	FRAME MAT.	FRAME FIN.	DETAILS HEAD	DETAILS JAMB	DETAILS MULL.	DETAILS JAMB	DETAILS SILL	** = DOUBLE PANED * = TEMPERED AS REQUIRED BY CODE REMARKS
A	1	4'-0"	5'-0"	1/4"	CLR		ALUM.	3	-	-	-	-	-	DOUBLE HUNG PASS-THRU WINDOW

WINDOW FINISHES

1. STAIN AND SEAL
2. PAINT - SATIN FINISH
3. PAINT -SEMI-GLOSS
4. PAINT - ENAMEL
5. FACTORY FINISH

△5

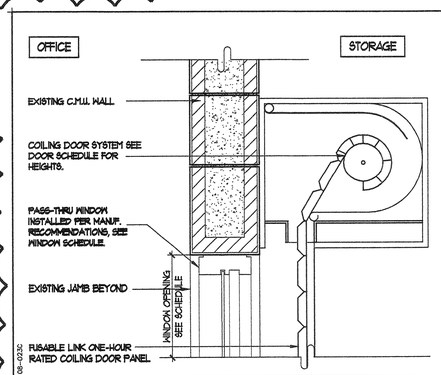

COILING DOOR HEAD SCALE 1 1/2" = 1'-0" 20

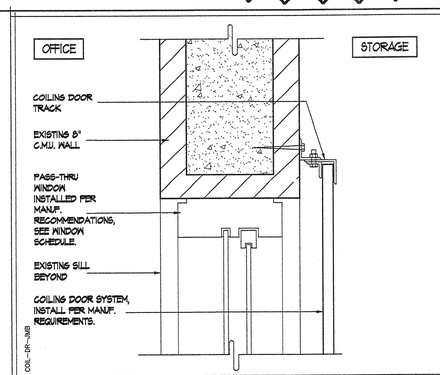

COILING DOOR @ JAMB SCALE 3" = 1'-0" 16

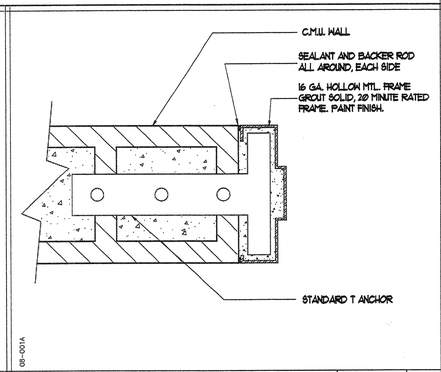

H.M. DOOR @ JAMB SCALE 3" = 1'-0" 12

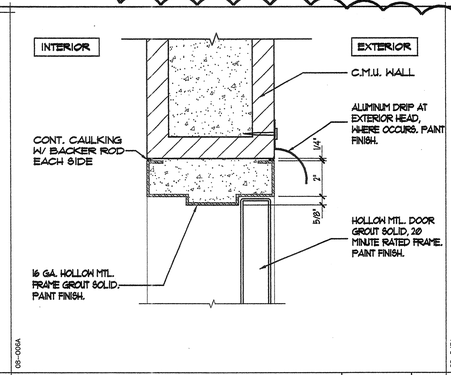

H.M. DOOR @ HEAD SCALE 3" = 1'-0" 8

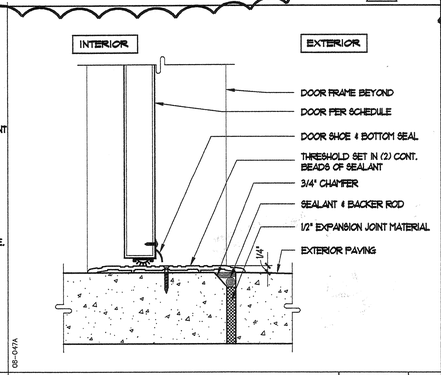

TYP. EXT. DOOR THRESHOLD SCALE 3" = 1'-0" 4

PROJECT ARCHITECT

KROHIBROESKE ARCHITECTS

8180 BROCKTON AVE. SUITE 202
RIVERSIDE, CA. 92506-2228
TEL 909-788-5940
FAX 909-788-1365
E-MAIL: KBA@KROHIBROESKE.COM

CONSULTANTS

PROJECT

LICENSED ARCHITECT JAMES L. BROESKE No. C009174 Exp. 11-30-2003 STATE OF CALIFORNIA

VILLEGAS GYM EXPANSION

7240 MARGUERITA AVE. RIVERSIDE, CA. 92504

REVISION
△1 01-28-03 1st PLAN CHECK REVISIONS
△2 04-18-03 2nd PLAN CHECK REVISIONS
△3 04-18-03 OWNER REQUESTED REVISIONS
△4 05-12-03 3rd PLAN CHECK REVISIONS
△5 06-12-03 PROJECT REVISIONS

THIS DRAWING AND THE DESIGNS, ARRANGEMENTS, DEPICTIONS, IDEAS AND OTHER INFORMATION CONTAINED HEREIN CONSTITUTE UNPUBLISHED WORK OF KROHIBROESKE ARCHITECTS AND SHALL REMAIN PROPERTY OF KROHI BROESKE ARCHITECTS IN PERPETUITY. NO PART THEREOF SHALL BE REPRODUCED, COPIED, DISCLOSED, DISTRIBUTED, SOLD, PUBLISHED OR OTHERWISE USED WITHOUT THE PRIOR WRITTEN CONSENT OF KROHIBROESKE ARCHITECTS. YOUR CONTRACT WITH THE KROHIBROESKE OFFICE FOR ANY PART THEREOF, SHALL CONSTITUTE CONCLUSIVE EVIDENCE OF ACCEPTANCE OF THESE RESTRICTIONS.

SHEET TITLE

DOOR, WINDOW & FINISH SCHEDULE

DRAWN	P. JARAMILLO
CHECKED	J. BROESKE
SCALE	NONE
DATE	12-20-02
JOB	02029
SHEET	

A5.1

BID NO. 6099

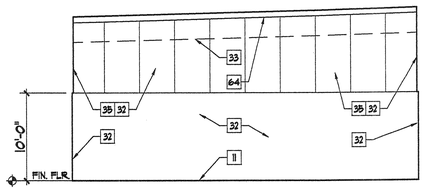

1

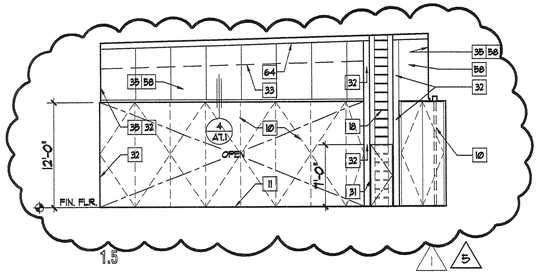

1.5

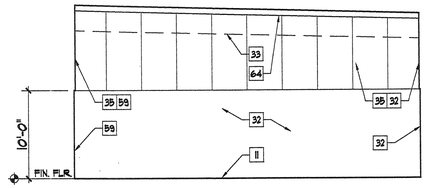

2

141

MULTI-PURPOSE

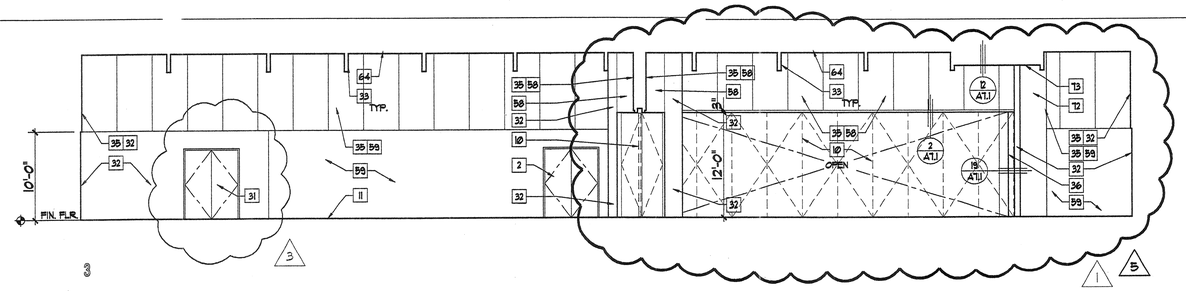

3

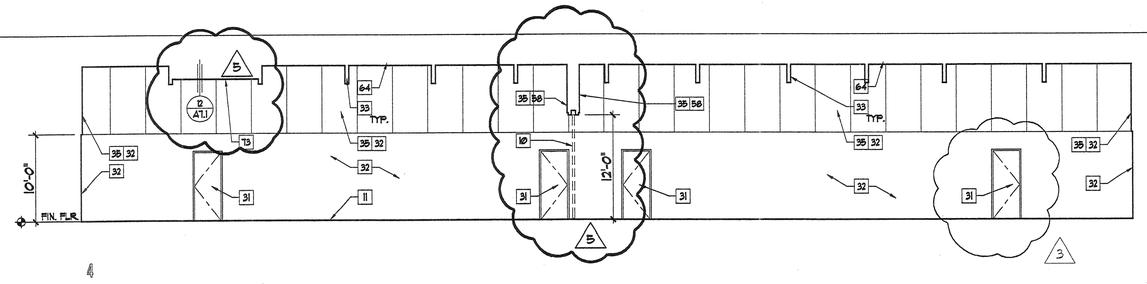

4

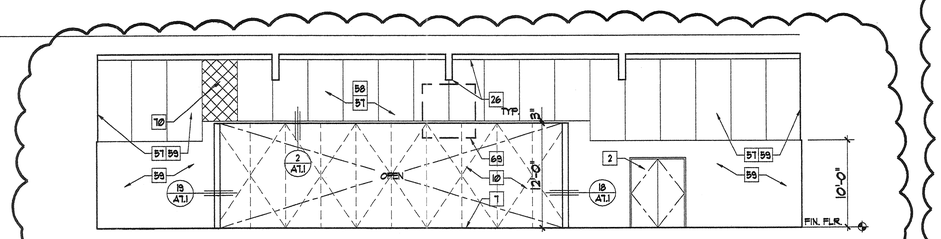

4

136

(E) GYMNASIUM

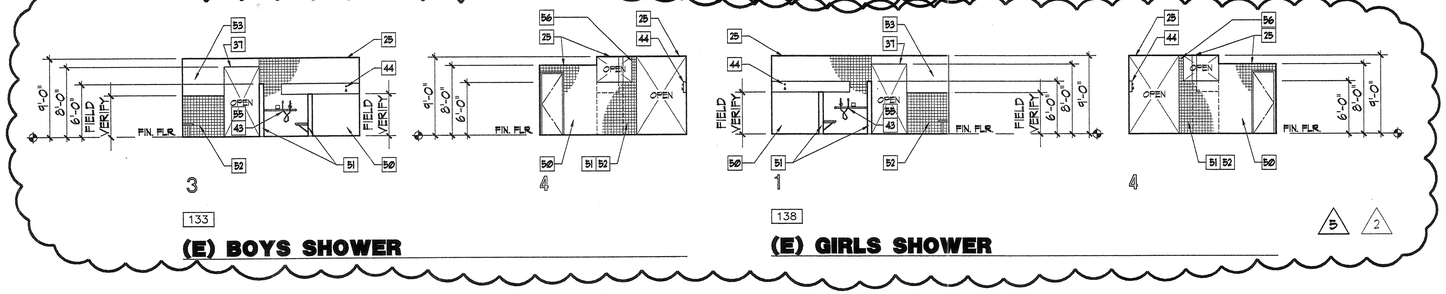

KEY NOTES

1. (E) Electrical equipment to remain, protect in place.
2. (E) Door to remain, protect in place.
3. (E) Edge of canopy above to be removed.
4. (E) Columns to be removed.
5. (E) Concrete sidewalk to be removed.
6. (E) Door to be removed.
7. (E) Hardwood floor to remain, protect in place. Remove, patch, repair, and/or replace hardwood floor as needed.
8. (N) Boxing ring. See specifications, Additive Bid II-B.
9. (N) Relocatable bleacher seating. See specifications, Additive Bid II-C.
10. (N) Folding panel doors. See specifications, Additive Bid II-A.
11. (N) Concrete slab w/ vapor barrier over 2" sand, See structural drawings.
12. (E) Roof to remain, protect in place.
13. (E) Parapet to remain, protect in place.
14. (E) Plywood cricket to remain, protect in place.
15. (E) Scupper to remain, protect in place.
16. (N) Roof hatch w/ access ladder.
17. (N) Roof drain and overflow, See detail 10/A7.1.
18. (N) Roof access ladder.
19. (N) Plywood cricket.
20. (N) Walk-boards, add as required to provide path to service roof mounted equipment.
21. (N) Fiber cant strip.
22. (E) Mechanical equipment, See mechanical drawings.
23. (N) Mechanical equipment, See mechanical drawings. All mechanical ductwork to be painted, See specs.
24. (N) Built-up roofing over (N) Roof sheathing per structural plans.
25. (E) Gypsum board ceiling to remain, protect in place. Patch and repair as needed, paint to match existing.
26. (E) Exposed roof framing members.
27. (E) Electrical fixtures.
28. (N) Electrical fixtures, See electrical drawings.
29. (E) Parapet and cricket to be removed, sheet flow (E) roof to (N) lower roof. See section B/A4.1
30. (N) Wood fascia and trim to match existing, See details 8/A7.1.
31. (N) Door per schedule.
32. (N) Masonry wall to match existing 8"x8"x16" slump block, See structural plans. Paint finish, See specs.
33. (N) Roof framing per structural plans.
34. (N) Concrete footing per structural plans.
35. (N) Wall mounted acoustical panels, See details 5,6, 9/A7.1 and specs.
36. (N) Steel column/beam per structural plans.
37. Provide (N) plaster soffit @ 8'-0" A.F.F., align with existing ceiling. Field verify existing ceiling height. Patch, repair, replace, and paint adjacent areas as needed.
38. (E) Window to be removed. Patch and repair opening with similar material and paint color of adjacent exterior and interior surfaces.
39. (N) Ceiling door to be placed over existing window, See window schedule.
40. (E) Window. Remove security bars and window, patch and repair as needed to receive new window.
41. (E) Soffit to be removed.
42. (N) Pass-thru window, See window schedule.
43. (N) H.C. shower stall per A.D.A. guidelines, See detail 4/A7.2.
44. (E) Shower heads w/ control valves, typical.
45. (E) Shower head w/ control valve(s) to be capped.
46. (E) Shower head w/ control valve(s) to be removed and modify plumbing to accommodate H.C. shower stall accessories per A.D.A. guidelines, See plumbing drawings and detail 4/A7.2.
47. (E) Floor drain to remain, protect in place.
48. (E) Door to be removed. Modify existing opening to receive a 3'-0" x 7'-0" door plus frame, See door schedule.
49. (N) Roof drain and overflow down pipes. Roof drain to daylight at nearest curb and overflow drain to daylight at wall 6" above finish paving/grade, See plumbing drawings.
50. (E) Full height ceramic tile, protect in place. Patch and repair as needed.
51. (N) Partial height wall per wall legend.
52. (N) Ceramic tile to match existing.
53. (N) Wall per wall legend.
54. (N) Roof vent. Empire model TV12G, turbine type,1200 c.f.m. at 4 mi. wind, externally braced, bronze oil impregnated bottom thrust-type ball bearing, galvanized steel construction, (GRAINGER STOCK NO. 2C531).
55. Remove and replace wall tile as required to install plumbing.
56. (N) Partial height end-wall post with ceramic tile all around to match existing color and pattern.
57. (E) Tectum acoustical panels to remain, cut and remove portion of panels to enable new construction. Remove and replace as needed.
58. (N) 5/8" Gyp. Bd. type "X", prep and paint exposed surfaces.
59. (E) C.M.U. wall to remain, protect in place. Patch, repair, and paint areas as needed.
60. Rework (E) cricket as required to maintain adequate drainage.
61. Remove, replace, and/or repair (E) roofing and sub roofing as required to maintain adequate drainage.
62. (N) Splash guard, See spec.
63. (N) Soffit, paint finish.
64. (N) Ceiling mounted acoustical panels, See details 5 or 9/A7.1 and specs.
65. Patch, repair, replace, and/or paint as needed where existing and new construction occurs.
66. (N) Bench to be provided by owner.
67. (N) VCT Flooring - Base Bid.
    (N) Wood Flooring - Alternate Bid III-A.
68. Remove existing fire hose cabinet and cap pipe.
69. (E) Scoreboard to be relocated to East wall of room 136.
70. Provide new Tectum acoustical wall panel, match existing type and color.
71. (N) Roof drain and overflow down pipes to daylight at wall 6" above finish paving/grade, See plumbing drawings.
72. (N) Furr-out wall for installation of electrical panel. Provide metal studs and 5/8" gyp. bd. from floor to roof structure.
73. (N) Ceiling mounted acoustical panels per detail 12/A7.1.
74. (N) 12" high formed plastic address letters.
75. Occupancy signage: Seton Sign Co. 256XX silk screened letters on the back of clear acrylic face. Size 3"X12". Provide at locations indicated.
76. Fire Ext. and Cabinet: Larson Industries, surface mounted steel cabinet, full glass with Larson-Loc, and 2A10BC extinguisher.
77. (N) Steel canopy per detail 1/A7.2.

PROJECT ARCHITECT

KROHI BROESKE ARCHITECTS

6180 BROCKTON AVE. SUITE 202

RIVERSIDE, CA. 92506-2226

TEL 909-788-5940

FAX 909-788-1365

E-MAIL: KBA@KROHIBROESKE.COM

CONSULTANTS

PROJECT

LICENSED ARCHITECT
JAMES L. BROESKE
No. C009174
Ren. 11-30-2003
STATE OF CALIFORNIA

VILLEGAS GYM EXPANSION

7240 MARGUERITA AVE. RIVERSIDE, CA. 92504

REVISION

- 5 01-26-03 1st PLAN CHECK REVISIONS
- 4 04-18-03 2nd PLAN CHECK REVISIONS
- 3 04-18-03 OWNER REQUESTED REVISIONS
- 2 05-12-03 3rd PLAN CHECK REVISIONS
- 1 06-12-03 PROJECT REVISIONS

THIS DRAWING AND THE DESIGNS, ARRANGEMENTS, DEPICTIONS, IDEAS AND OTHER INFORMATION CONTAINED HEREIN CONSTITUTE UNPUBLISHED WORK OF KROHI/BROESKE ARCHITECTS AND SHALL REMAIN PROPERTY OF KROHI BROESKE ARCHITECTS IN PERPETUITY. NO PART THEREOF SHALL BE REPRODUCED, PUBLISHED OR DISCLOSED TO OTHERS OR USED IN CONNECTION WITH ANY WORK OR PROJECT OTHER THAN THE SPECIFIC PROJECT FOR WHICH THEY HAVE BEEN PREPARED AND DEVELOPED WITHOUT THE WRITTEN CONSENT OF KROHI/BROESKE ARCHITECTS. VISUAL CONTACT WITH THE DRAWINGS, OR ANY PART THEREOF, SHALL CONSTITUTE CONCLUSIVE EVIDENCE OF ACCEPTANCE OF THESE RESTRICTIONS.

SHEET TITLE

INTERIOR ELEVATIONS

DRAWN	P. JARAMILLO
CHECKED	J. BROESKE
SCALE	1/8" = 1'-0"
DATE	12-20-02
JOB	02029
SHEET	

A6.1

BID NO. 6099

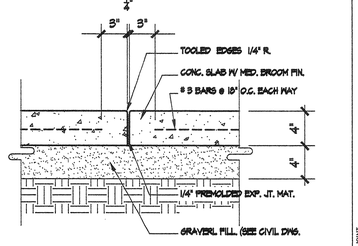

TYP. EXPANSION JOINT

SCALE 1 1/2"=1'-0" — 5 — 17

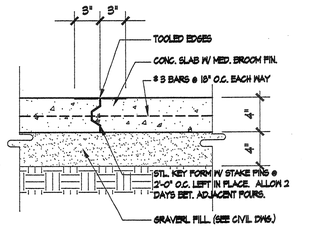

TYP. CONTROL JOINT

SCALE 1 1/2"=1'-0" — 5 — 13

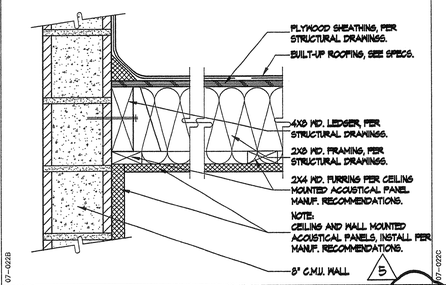

WALL/CEILING ACOUSTICAL PANELS

SCALE 1 1/2" = 1'-0" — 5 — 9

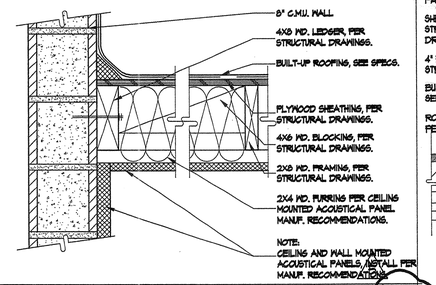

WALL/CEILING ACOUSTICAL PANELS

SCALE 1 1/2" = 1'-0" — 5 — 5

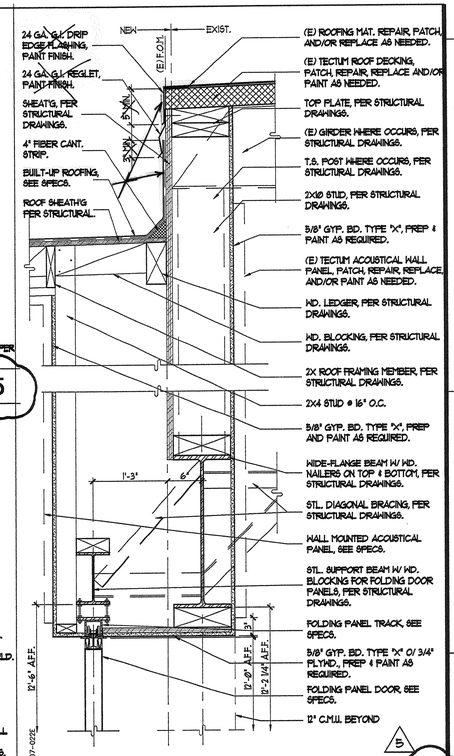

ROOF FLASHING & WALL PANEL TRACK

SCALE 1" = 1'-0" — 2 — 2

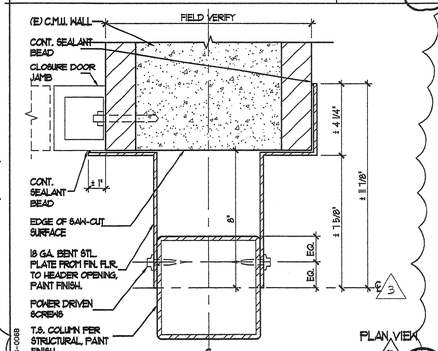

COLUMN/WALL TRIM

SCALE 3" = 1'-0" — 5 — 18

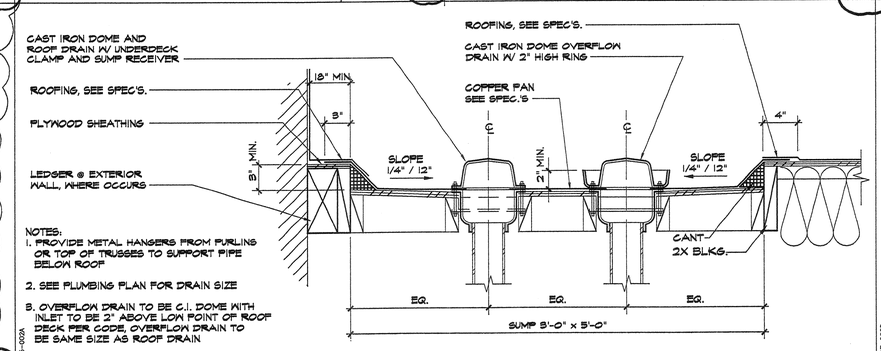

TYP. ROOF DRAIN & OVERFLOW

SCALE 1 1/2"=1'-0" — 10

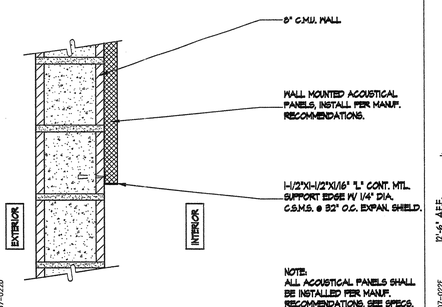

WALL ACOUSTICAL PANEL

SCALE 1 1/2" = 1'-0" — 6 — 6

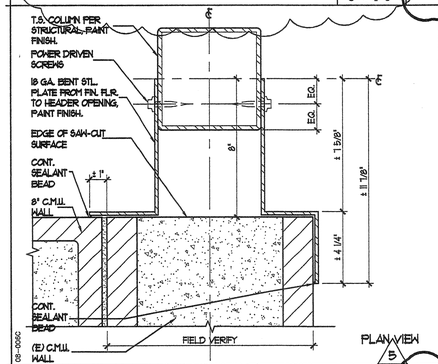

COLUMN/WALL TRIM

SCALE 3" = 1'-0" — 5 — 19

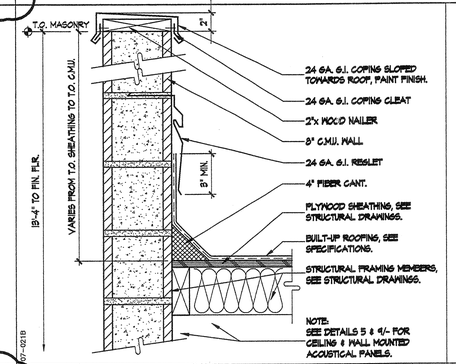

COPING & CANT STRIP @ C.M.U.

SCALE 1 1/2" = 1'-0" — 15

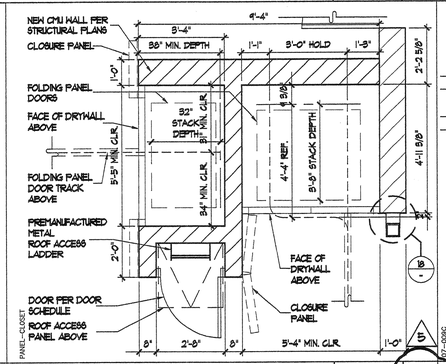

FOLDING PANEL CLOSETS

SCALE 3/8" = 1'-0" — 5 — 11

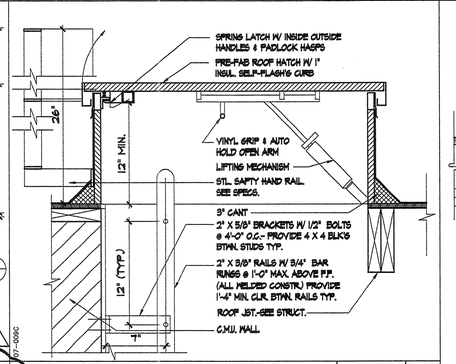

TYP. ROOF HATCH.\LADDER

SCALE 1 1/2" = 1'-0" — 7

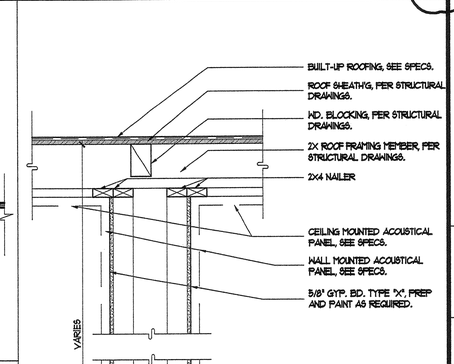

SECTION @ FOLDING DOOR TRACK

SCALE 1" = 1'-0" — 5 — 4

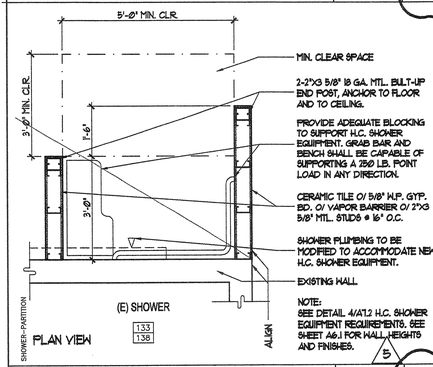

H.C. SHOWER END POST

SCALE 1/2" = 1'-0" — 5 — 20

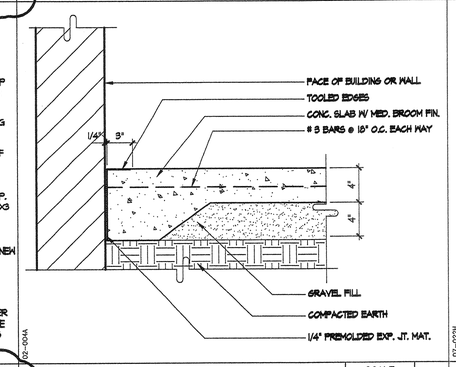

EXPANSION JOINT @ WALL

SCALE 1 1/2" = 1'-0" — 16

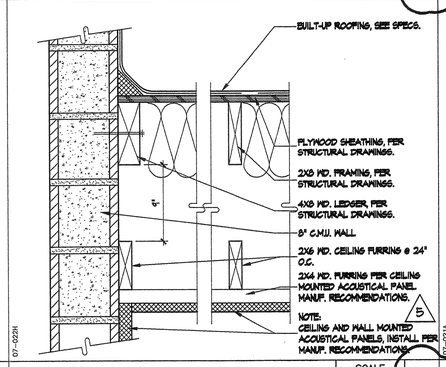

CEILING FURRING

SCALE 1 1/2" = 1'-0" — 12

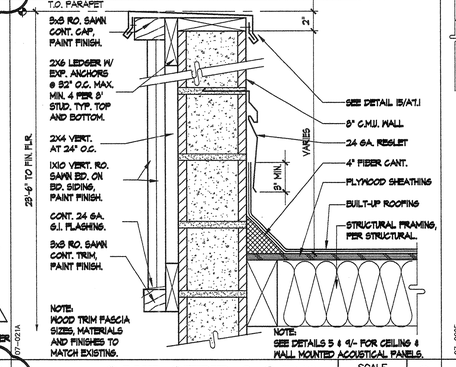

CANT STRIP @ C.M.U.

SCALE 1 1/2" = 1'-0" — 8

PROJECT ARCHITECT •

KROHIBROESKE ARCHITECTS

6180 BROCKTON AVE. SUITE 202

RIVERSIDE, CA. 92506-2228

TEL 909-788-5940

FAX 909-788-1365

E-MAIL: KBA@KROHBROESKE.COM

CONSULTANTS •

PROJECT •

LICENSED ARCHITECT JAMES L. BROESKE No. C009174 Ren. 11-30-2003 STATE OF CALIFORNIA

VILLEGAS GYM EXPANSION

7240 MARGUERITA AVE. RIVERSIDE, CA. 92504

REVISION •

- 01-28-03 1st PLAN CHECK REVISIONS
- 04-18-03 2nd PLAN CHECK REVISIONS
- 04-18-03 OWNER REQUESTED REVISIONS
- 05-12-03 3rd PLAN CHECK REVISIONS
- 06-12-03 PROJECT REVISIONS

THIS DRAWING AND THE DESIGNS, ARRANGEMENTS, DEPICTIONS, IDEAS AND OTHER INFORMATION CONTAINED HEREIN CONSTITUTE UNPUBLISHED WORK OF KROHI BROESKE ARCHITECTS AND SHALL REMAIN PROPERTY OF KROHI BROESKE ARCHITECTS IN PERPETUITY. NO PART THEREOF SHALL BE REPRODUCED, COPIED, DISCLOSED, DISTRIBUTED, SOLD, PUBLISHED OR OTHERWISE USED IN ANYWAY WITHOUT THE ADVANCE EXPRESS WRITTEN CONSENT OF KROHI BROESKE ARCHITECTS. VISUAL CONTACT WITH THE ABOVE DRAWINGS, OR ANY PART THEREOF, SHALL CONSTITUTE CONCLUSIVE EVIDENCE OF ACCEPTANCE OF THESE RESTRICTIONS.

SHEET TITLE •

DETAILS

DRAWN	• P. JARAMILLO
CHECKED	• J. BROESKE
SCALE	• AS NOTED
DATE	• 12-20-02
JOB	• 02029
SHEET	•

A7.1

BID NO. 6099

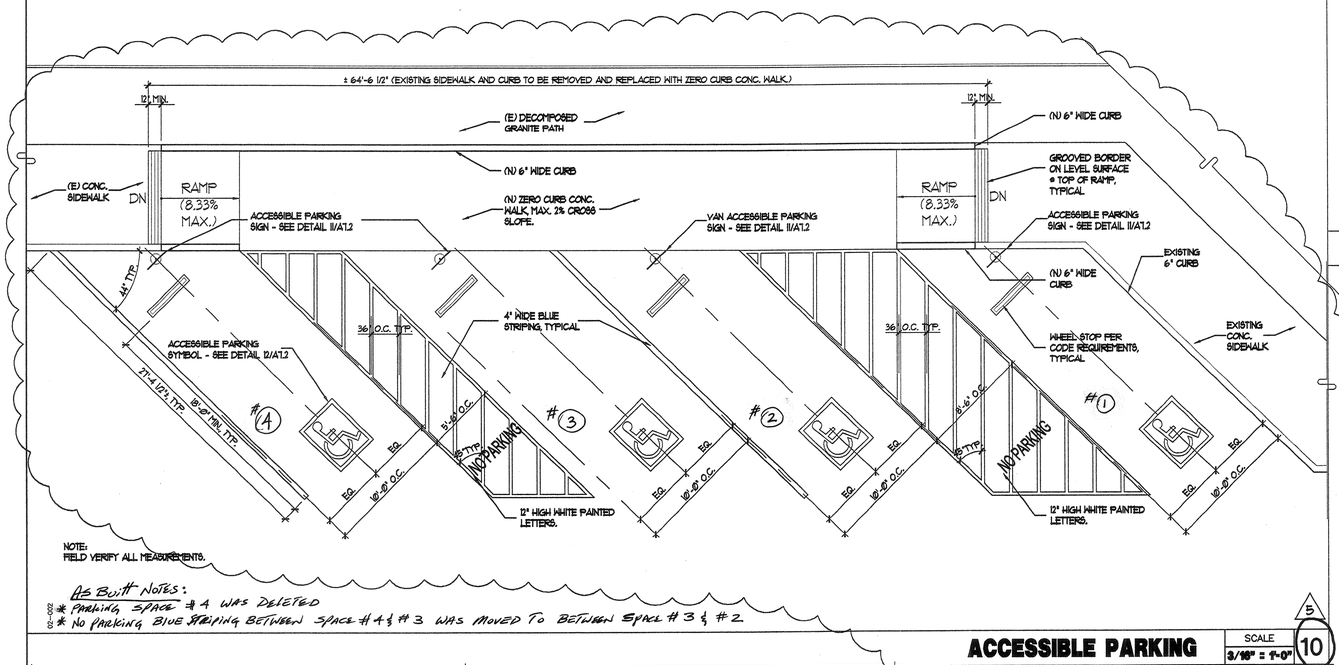

NOTE:
FIELD VERIFY ALL MEASUREMENTS.

AS Built NOTES:
* PARKING SPACE #4 WAS DELETED
* NO PARKING BLUE STRIPING BETWEEN SPACE #4 & #3 WAS MOVED TO BETWEEN SPACE #3 & #2

ACCESSIBLE PARKING

SCALE 3/16" = 1'-0" | 5/10

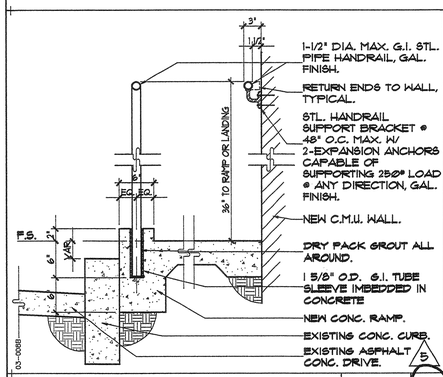

RAMP CURB AND HANDRAIL

5/19 — 1" = 1'-0"

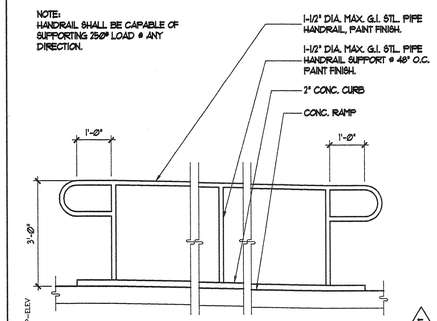

TYPICAL RAMP ELEVATION

SCALE 1/2" = 1'-0" | 5/20

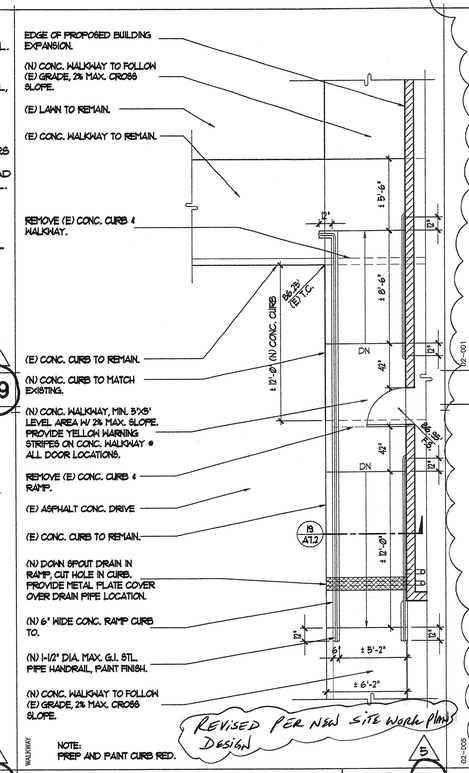

REVISED PER NEW SITE WORK PLANS

NOTE:
PREP AND PAINT CURB RED.

RAMP WALKWAY AREA

5/16 — 3/16" = 1'-0"

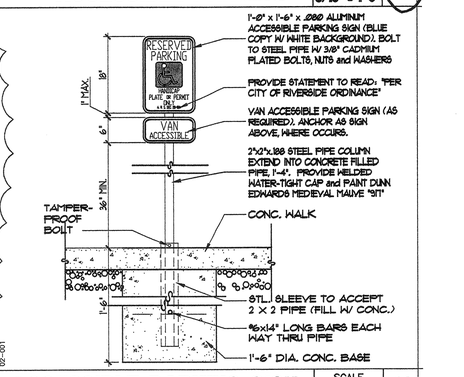

ACCESSIBLE PARKING SIGN

SCALE 3/4" = 1'-0" | 11

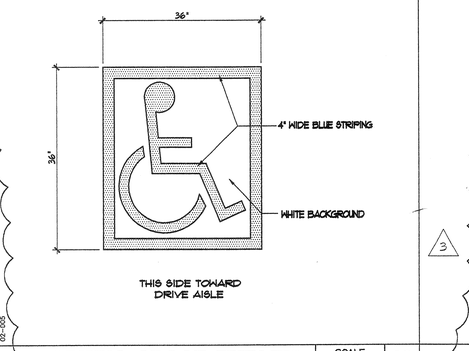

PARKING SPACE EMBLEM

SCALE 1" = 1'-0" | 12

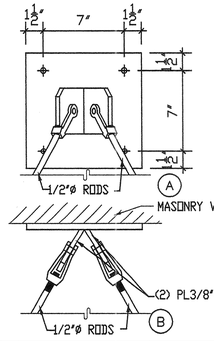

NOTE:
CONOPY SHALL SLOPE TO DRAIN AWAY FROM BUILDING @ 1/8" PER FOOT MIN.

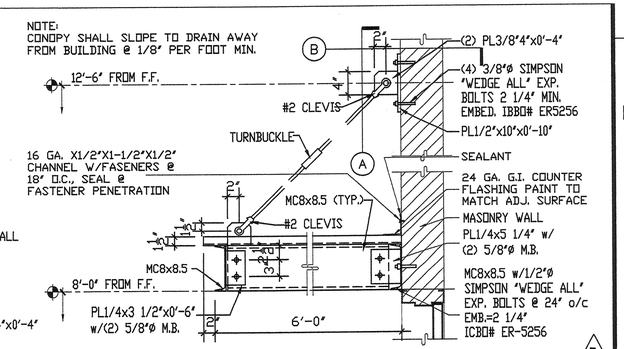

07-022J

TYP. STL. CANOPY

5/1 — SCALE 1" = 1'-0"

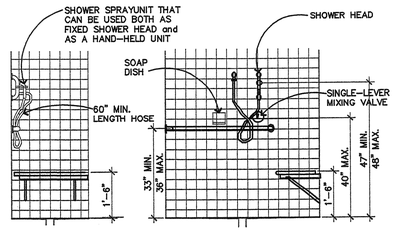

SEAT WALL:

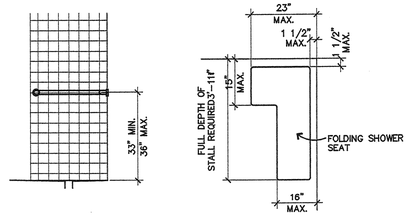

WALL OPPOSITE SEAT: SEAT DESIGN:

NOTES:

1. GRAB BARS SHALL BE CAPABLE OF SUPPORTING A 250 LB. POINT LOAD
2. SHOWER SEAT PROVIDES MINIMUM STRUCTURAL STRENGTH TO SUPPORT A 250LB. POINT LOAD.

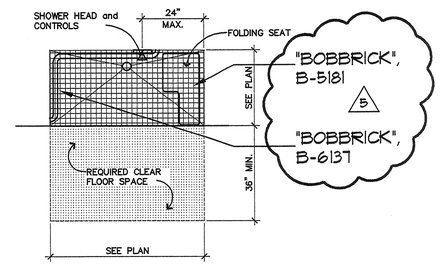

GENERAL NOTES:

1. THRESHOLD and/or CURBS ARE NOT ALLOWED IN SHOWER STALLS
2. MAXIMUM SURFACE SLOPE (1:50 GRADIENT) ALLOWED WITHIN BOTH STALL and ADJACENT CLEAR FLOOR SPACE
3. FLOOR SURFACES TO BE CARBORUNDUM, GRIT-FACED TILE, OR OF OTHER MATERIAL PROVIDING EQUIVALENT SLIP-RESISTANCE
4. WHERE, WITHIN THE SAME FUNCTIONAL AREA, TWO OR MORE SHOWERS ARE PROVIDED FOR THE PHYSICALLY HANDICAPPED, THERE SHALL BE AT LEAST ONE CONSTRUCTED OPPOSITE HAND FROM THE OTHER OR OTHERS (I.E., ONE LEFT HAND CONTROLS vs. RIGHT HAND CONTROLS)
5. ALL DIMENSIONS ARE TAKEN FROM FINISHED FACE OF WALL

ACCESSIBLE SHOWER STALL

5/4 — SCALE N.T.S.

PROJECT ARCHITECT
KROHIBROESKE ARCHITECTS
6180 BROCKTON AVE. SUITE 202
RIVERSIDE, CA. 92506-2228
TEL 909-788-5940
FAX 909-788-1365
E-MAIL: KBA@KROHBROESKE.COM

CONSULTANTS

PROJECT

LICENSED ARCHITECT JAMES L. BROESKE No. C009174 Ren. 11-30-2003 STATE OF CALIFORNIA

VILLEGAS GYM EXPANSION

7240 MARGUERITA AVE. RIVERSIDE, CA. 92504

REVISION
- 1 01-26-23 1st PLAN CHECK REVISIONS
- 2 04-18-23 2nd PLAN CHECK REVISIONS
- 3 04-18-23 OWNER REQUESTED REVISIONS
- 4 05-12-23 3rd PLAN CHECK REVISIONS
- 5 06-12-23 PROJECT REVISIONS

THIS DRAWING AND THE DESIGNS, ARRANGEMENTS, DEPICTIONS, IDEAS AND OTHER INFORMATION CONTAINED HEREIN CONSTITUTE UNPUBLISHED WORK PRODUCT OF KROHIBROESKE ARCHITECTS AND SHALL REMAIN THE PROPERTY OF KROHIBROESKE ARCHITECTS. NO PART OF THIS WORK SHALL BE REPRODUCED, COPIED, DISCLOSED, DISTRIBUTED,SOLD, PUBLISHED OR OTHERWISE USED IN ANYWAY WITHOUT THE ADVANCE EXPRESS WRITTEN CONSENT OF KROHIBROESKE ARCHITECTS. VISUAL CONTACT WITH THE ABOVE DRAWINGS, OR ANY PART THEREOF, SHALL CONSTITUTE CONCLUSIVE EVIDENCE OF ACCEPTANCE OF THESE RESTRICTIONS.

SHEET TITLE

DETAILS

DRAWN	P. JARAMILLO
CHECKED	J. BROESKE
SCALE	AS NOTED
DATE	12-20-02
JOB	02029
SHEET	2

A7.2

BID NO. 6099

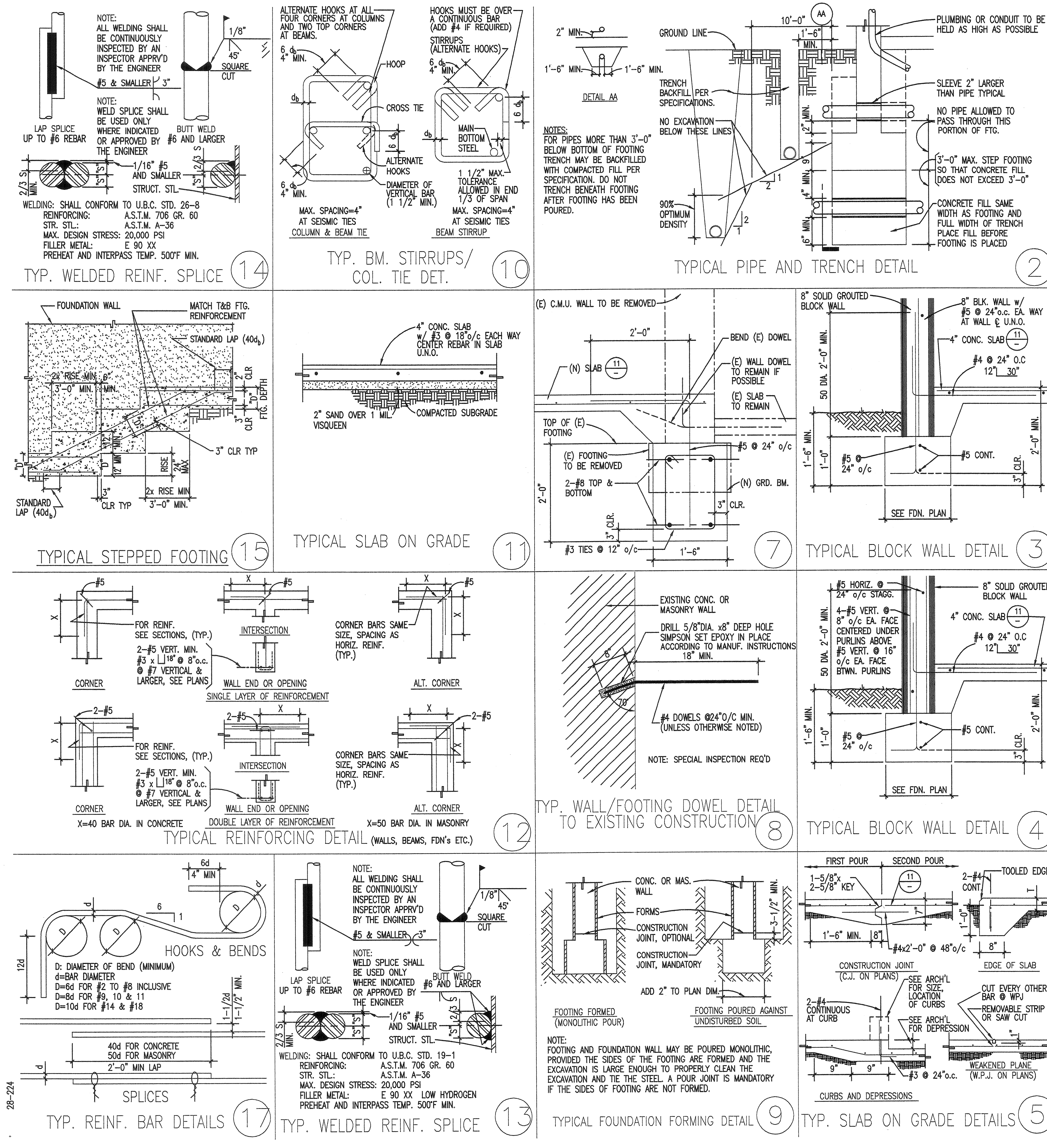

MASONRY:

1. ALL MASONRY WORK SHALL CONFORM TO THE U.B.C.
2. NO PIPES OR DUCTS SHALL BE PLACED IN MASONRY WALLS UNLESS SPECIFICALLY NOTED OR DETAILED.
3. ALL REINFORCING SHALL BE LAP SPLICED 50 BAR DIA. MINIMUM.
4. ALL REINFORCING SHALL HAVE A MINIMUM 1/2" GROUT COVERAGE.
5. MORTAR: TYPE "S" CONFORMING TO TABLE 21-A, U.B.C. - 1500 P.S.I.
6. GROUT: 1-CEMENT, 3-SAND, 2-GRAVEL - 2000 P.S.I.
7. CONCRETE BLOCK: U.B.C. STD. 21-4 GRADE "N"
8. ALL MASONRY SHALL BE REINFORCED AND SOLID GROUTED MASONRY.
9. CORE TESTS COMPRESSION 1500 P.S.I. SHEAR 100 P.S.I.
10. BRICK: U.B.C. STD. 24-1 MW.
11. BOLTS WITH "UPSET OR "ROLLED" THREADS ARE NOT ALLOWED. BOLT DIAMETERS INDICATED ARE SHANK DIAMETERS
12. <u>CONTINUOUS INSPECTION REQUIRED FOR ALL MASONRY WORK</u>

LEGEND

∅	- DIAMETER	MATL.	- MATERIAL
℄	- CENTER LINE	MAX.	- MAXIMUM
ℙ	- PLATE (STEEL)	M.B.	- MACHINE BOLT
A.B.	- ANCHOR BOLT	MECH.	- MECHANICAL
BLK.	- BLOCK	MIN.	- MINIMUM
BLKG.	- BLOCKING	(N)	- NEW
BM.	- BEAM	N.G.	- NATURAL GRADE
B.N.	- BOUNDARY NAILING	N.T.S.	- NOT TO SCALE
BOT.	- BOTTOM	O.C.	- O/C ON CENTER
C.B.	- CARRIAGE BOLT	OPNG.	- OPENING
CLR.	- CLEAR	PERP.	- PERPENDICULAR
C.J.	- COLD JOINT (CONST. JOINT)	P.J.	- POUR JOINT
C.J.P.	- COMPLETE JOINT PENETRATION	P.J.P.	- PARTIAL JOINT PENETRATION
COL.	- COLUMN	PLT.	- PLATE (WOOD)
CONC.	- CONCRETE	PLYWD.	- PLYWOOD
CONN.	- CONNECTION	P.T.	- PRESSURE TREATED
CONST.	- CONSTRUCTION	REINF.	- REINFORCING
CONT.	- CONTINUOUS	REM.	- REMAINDER
C.P.E.	- CONT. PANEL EDGES	REQD.	- REQUIRED
DBL.	- DOUBLE	RF.	- ROOF.
DIA.	- DIAMETER	S.A.	- STUD ANCHOR
DO.	- DITTO	SCHED.	- SCHEDULE
DWG.	- DRAWING	SHPD.	- SHAPED
EA.	- EACH	SHT.	- SHEET
ELEV.	- ELEVATION	SHTG.	- SHEATHING
(E)	- EXISTING	SIM.	- SIMILAR
E.J.	- EXPANSION JOINT	S.M.	- SHEET METAL
E.N.	- EDGE NAILING	SQ.	- SQUARE
EQ.	- EQUAL	STAGG.	- STAGGER
EXT.	- EXTERIOR	STD.	- STANDARD
F.G.	- FINISH GRADE	STIFF.	- STIFFNER
FLR.	- FLOOR	STL.	- STEEL
F.N.	- FIELD NAILING	THK.	- THICK
F.O.C.	- FACE OF CONCRETE	T.O.C.	- TOP OF CONCRETE
F.O.M.	- FACE OF MASONRY	T.O.M.	- TOP OF MASONRY
F.O.S.	- FACE OF STUD	T.O.D.	- TOP OF STEEL DECK
FRMG.	- FRAMING	T.O.S.	- TOP OF STEEL
FDN.	- FOUNDATION	T.O.W.	- TOP OF WALL
FTG.	- FOOTING	T.P.	- TOP OF PARAPET
GALV.	- GALVANIZED	T.S.	- TUBE STEEL
GA.	- GAUGE	TYP.	- TYPICAL
G.L.B.	- GLUE LAMINATED BEAM	U.N.O.	- UNLESS NOTED OTHERWISE
GYP. BD.	- GYPSUM BOARD	VERT.	- VERTICAL
HORIZ.	- HORIZONTAL	W/	- WITH
H.S.B.	- HIGH STRENGTH BOLT	WD.	- WOOD
HT.	- HEIGHT	W.P.J.	- WEAKENED PLANE JOINT
JST.	- JOIST	W.W.F.	- WELDED WIRE FABRIC
LT.WT.	- LIGHTWEIGHT		
MAS.	- MASONRY		

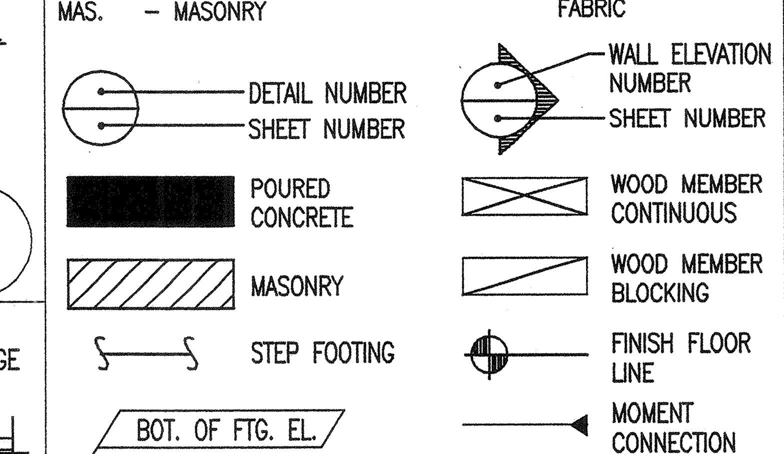

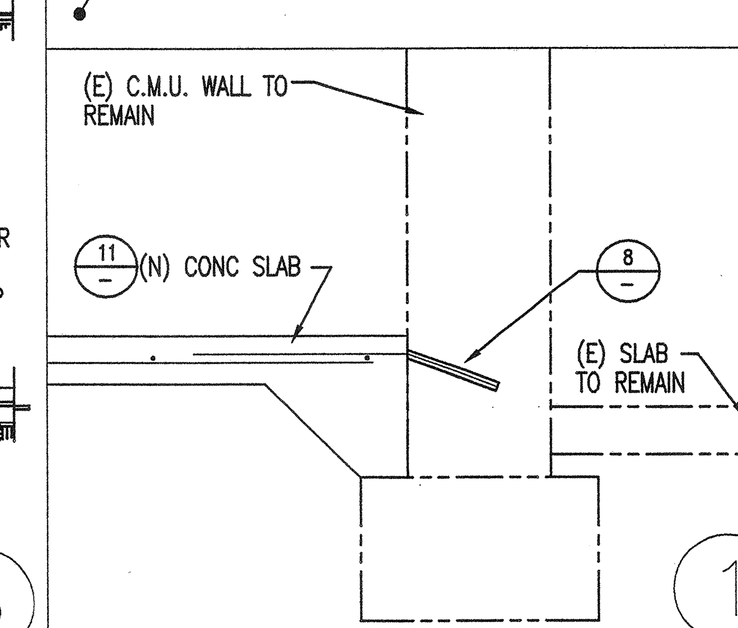

GENERAL NOTES

GENERAL:

1. FRAMING CONDITIONS NOT SPECIFICALLY SHOWN SHALL BE FRAMED SIMILAR TO DETAILS SHOWN FOR THE RESPECTIVE MATERIALS.
2. ALL CONSTRUCTION SHALL CONFORM TO THE 1997 UNIFORM BUILDING CODE.
3. CONTRACTOR SHALL VERIFY ALL DIMENSIONS BEFORE STARTING WORK. THE ARCHITECT SHALL BE NOTIFIED OF ANY DISCREPANCIES.
4. NOTWITHSTANDING ANY REFERENCE IN THE CONSTRUCTION DOCUMENTS TO ANY RULE OR REGULATION, THE STRUCTURAL ENGINEER IS NOT ASSUMING ANY DUTY TO PROVIDE SUPERVISION OF CONSTRUCTION METHODS OR PROCESSES.

INSPECTION:

1. CONTINUOUS INSPECTION BY A REGISTERED DEPUTY BUILDING INSPECTOR EMPLOYED BY THE TESTING LABORATORY & APPROVED BY THE CITY OF RIVERSIDE SHALL BE PROVIDED FOR ALL PROVIDED FOR OVER 2500 PSI (EXCEPT SLAB ON GRADE) AND FOR MASONRY WORK
2. ALL WELDS SHALL BE INSPECTED. PROVIDE CONT. INSPECTION FOR FULL PENETRATION WELDS AND WELDING OF REINFORCING. THE INSPECTOR AND FABRICATION SHOP SHALL BE APPROVED BY THE CITY OF RIVERSIDE. FULL PENETRATION WELDS SHALL BE SUBJECTED TO ULTRASONIC INSPECTION.
3. THE SOILS ENGINEER SHALL INSPECT THE PREPARING AND PLACING OF ALL FILL BELOW BUILDINGS AND PAVING.

FOUNDATIONS:

1. ALL FILL SHALL BE COMPACTED TO A MINIMUM OF 90%
2. MAXIMUM SOIL PRESSURE: 1200 P.S.F.
3. TYPE OF SOIL: SILTY SAND
4. FOOTINGS SHALL BE CARRIED A MINIMUM OF 18" MIN BELOW FINISH GRADE.
5. ALL EXCAVATIONS SHALL BE INSPECTED AND APPROVED BY THE SOILS ENGINEER PRIOR TO FORMING AND PLACING REINFORCING STEEL.
6. ALL FOOTINGS & SLABS SHALL BEAR ON A COMPACTED FILL MATERIAL SEE SOIL REPORT & SPECIFICATIONS.
7. FOR PIPE & CONDUIT PENETRATION SEE DETAIL 2/– FOR SIZE & LOCATION SEE GRADING PLAN

CONCRETE:

1. THE 28-DAY STRENGTH AND TYPE OF CONCRETE SHALL BE AS FOLLOWS:
   SLABS ON GRADE------------2500 P.S.I.----150 P.C.F.
   FOOTINGS-----------------2500 P.S.I.----150 P.C.F.
2. AGGREGATES: NATURAL SAND AND ROCK-------A.S.T.M. C-33
   LIGHTWEIGHT -------A.S.T.M. C-330
3. CEMENT: PORTLAND CEMENT, TYPE I OR II,
   LOW ALKALI------------A.S.T.M. C-150
4. NO PIPE OR DUCTS SHALL BE PLACED IN CONCRETE UNLESS SPECIFICALLY DETAILED.
5. REINF., DOWELS, ANCHOR BOLTS, INSERTS, ETC., SHALL BE SECURELY TIED IN PLACE PRIOR TO POURING OF CONCRETE OR GROUT.

REINFORCING:

1. TYPICAL REINFORCING-----A.S.T.M. A-615---------GRADE 60
   STIRRUPS, TIES, SLABS ON GRADE AND
   NON-STRUCT ITEMS------A.S.T.M. A-615---------GRADE 40
   REINFORCING TO BE WELDED SHALL BE A.S.T.M. A-706 GR. 60
2. REINFORCING FABRIC-------------------- A.S.T.M. A-185
3. LAP ALL BARS A MINIMUM OF 40-BAR DIAMETERS IN CONCRETE AND 50 BAR DIAMETERS IN MASONRY. (2'-0" MINIMUM) U.N.O.
4. SPLICES OF ALL HORIZONTAL REINFORCING SHALL BE STAGGERED.
5. COLUMN AND WALL DOWELS SHALL BE SAME SIZE AND SPACING AS COLUMN OR WALL REINFORCING.
6. MINIMUM CONCRETE COVERAGE:
   THE FOLLOWING MINIMUM COVERAGE SHALL BE MAINTAINED UNLESS NOTED OTHERWISE:
   SLABS ON GRADE---------------------CENTER OF SLAB
   CAST AGAINST & EXPOSED TO EARTH------------------3"
   FORMED, EXPOSED TO EARTH AND WEATHER;
   #6 AND LARGER-----------2"
   #5 AND SMALLER-------1 1/2"
   NOT EXPOSED TO EARTH OR WEATHER:
   SLABS, WALLS, JOISTS---#14 & #18-----------1 1/2"
   #11 AND SMALLER--------3/4"
   BEAMS, GIRDERS, COLUMNS------------------1 1/2"
7. WELDING OF REINFORCING STEEL-----------U.B.C. STD. 26.8 LOW HYDROGEN

STRUCTURAL STEEL:

1. STEEL SHALL CONFORM TO THE FOLLOWING REQUIREMENTS OF:
   STRUCTURAL SHAPES, PLATES------
   COLUMNS, BEAMS & PLATES @ MOMENT FRAMES--- A.S.T.M. A-572 GRADE 50
   BOLTS---------------------A.S.T.M. A-307
   HIGH STRENGTH BOLTS---------- A.S.T.M. A-325 (TYPE N)
   (BEARING TYPE CONN. WITH THREADS INCLUDED IN THE SHEAR PLANE.)
2. ALL FABRICATION AND ERECTION SHALL CONFORM TO THE LATEST EDITION OF A.I.S.C.
3. NO STRUCTURAL STEEL SHALL BE FABRICATED OR ERECTED UNTIL SHOP DRAWINGS HAVE BEEN REVIEWED BY THE STRUCTURAL ENGINEER.
4. WELDING SHALL BE PERFORMED BY A CERTIFIED WELDER (S). APPROVED BY THE CITY OF RIVERSIDE.
5. ALL SHOP WELDING SHALL BE DONE IN THE SHOP OF A CITY OF RIVERSIDE APPROVED FABRICATOR.
6. NO FIELD CUTTING OR BURNING OF STRUCTURAL STEEL WILL BE PERMITTED WITHOUT WRITTEN APPROVAL OF THE STRUCTURAL ENGINEER.

PROJECT ARCHITECT •
KROH/BROESKE
A R C H I T E C T S
6180 BROCKTON AVE. SUITE 104
RIVERSIDE, CA. 92506-2228
TEL 909-788-5940
FAX 909-788-1365
E-MAIL: KBA111@AOL.COM

CONSULTANTS •
JN JOHNSON & NIELSEN ASSOCIATES
CONSULTING STRUCTURAL ENGINEERS

REGISTERED PROFESSIONAL ENGINEER
LONNIE MOUNT
No. 3834
Exp. Date 3-31-04
STRUCTURAL
STATE OF CALIFORNIA

PROJECT •

VILLEGAS PARK
CITY OF RIVERSIDE

7240 MARGUERITA AVENUE
Riverside, Ca.

REVISION •
4 PLAN CHECK REVISIONS 6-6-03

SHEET TITLE •

GENERAL NOTES AND TYPICAL DETAILS

DRAWN	•
CHECKED	• L.M.
SCALE	• AS NOTED
DATE	• 11-02
JOB	•
SHEET	•

S0.1

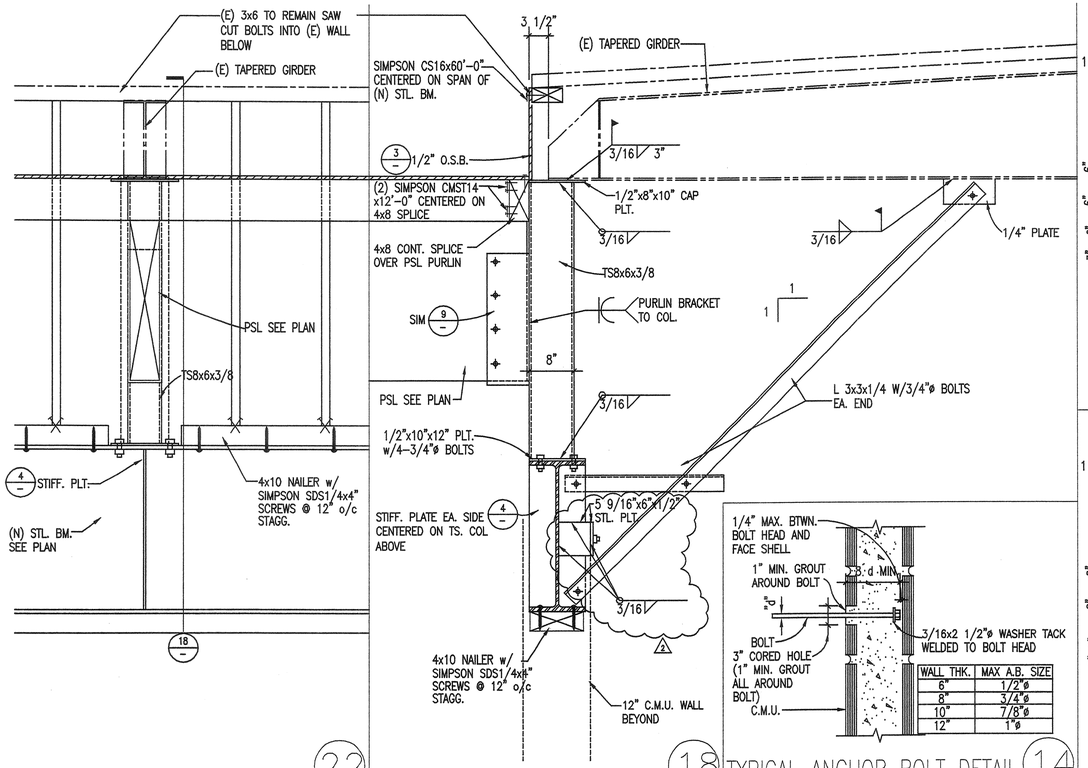

18 TYPICAL ANCHOR BOLT DETAIL 14

WALL THK.	MAX A.B. SIZE
6"	1/2"ø
8"	3/4"ø
10"	7/8"ø
12"	1"ø

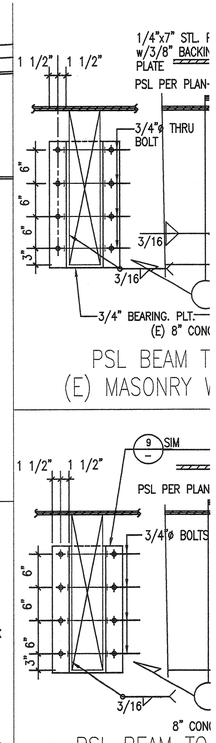

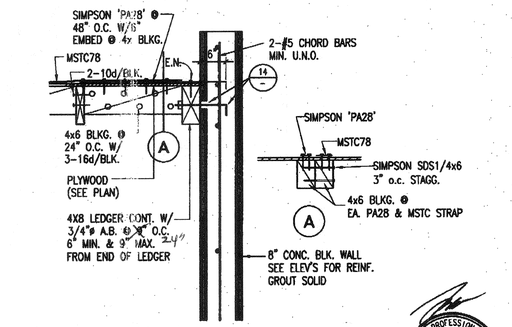

RAFTERS TO MASONRY WALL

DETAIL REF: 5 / S0.2

LONNIE MOUNT No. 3834 Exp. Date 3-31-06 REGISTERED PROFESSIONAL ENGINEER STRUCTURAL STATE OF CALIFORNIA

28-224

KROH/BROESKE ARCHITECTS 6180 BROCKTON AVE. RIVERSIDE, CA. 92506 TEL 909 788-5940 FAX 909 788-1365

VILLEGAS PARK — 11-15-04

7240 MARGUERITA AVENUE
RIVERSIDE, CA.

JN JOHNSON & NELSEN ASSOCIATES CONSULTING STRUCTURAL ENGINEERS 647 N. Main St. Suite 4B, Riverside CA. 92501 (909)686-5122

CL-8

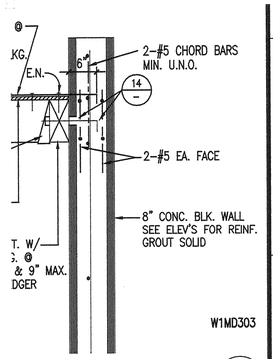

W1MD303

TO MASONRY WALL 2/M/07 1

PROJECT ARCHITECT • KROH/BROESKE ARCHITECTS 6180 BROCKTON AVE. SUITE 104 RIVERSIDE, CA. 92506-2228 TEL 909-788-5940 FAX 909-788-1365 E-MAIL: KBA111@AOL.COM

CONSULTANTS • JN JOHNSON & NELSEN ASSOCIATES CONSULTING STRUCTURAL ENGINEERS 647 N. Main St. Suite 4B, Riverside CA. 92501 (909)686-5122

LONNIE MOUNT No. 3834 Exp. Date 3-31-04 REGISTERED PROFESSIONAL ENGINEER STRUCTURAL STATE OF CALIFORNIA

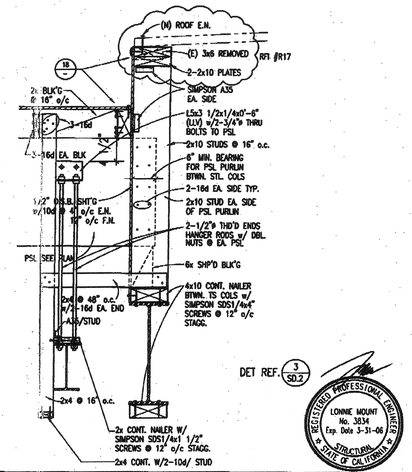

28-224

KROH/BROESKE ARCHITECTS 6180 BROCKTON AVE. RIVERSIDE, CA. 92506 TEL 909 788-5940 FAX 909 788-1365

VILLEGAS PARK — 1-19-04, 12-10-04

7240 MARGUERITA AVENUE
RIVERSIDE, CA.

JN JOHNSON & NELSEN ASSOCIATES CONSULTING STRUCTURAL ENGINEERS 647 N. Main St. Suite 4B, Riverside CA. 92501 (909)686-5122

CL4

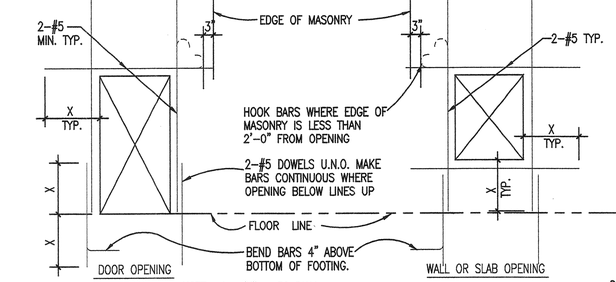

NOTE: 1. "X" = 50 DIAM.

TYP. MASONRY OPENING REINFORCEMENT DETAIL C8NT804 11 3/12/96

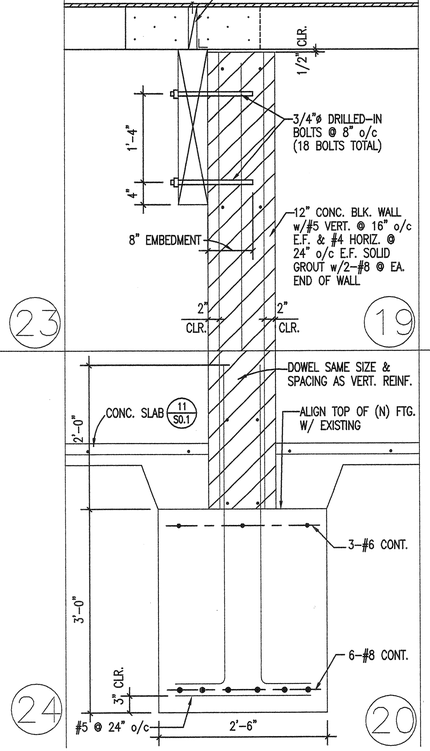

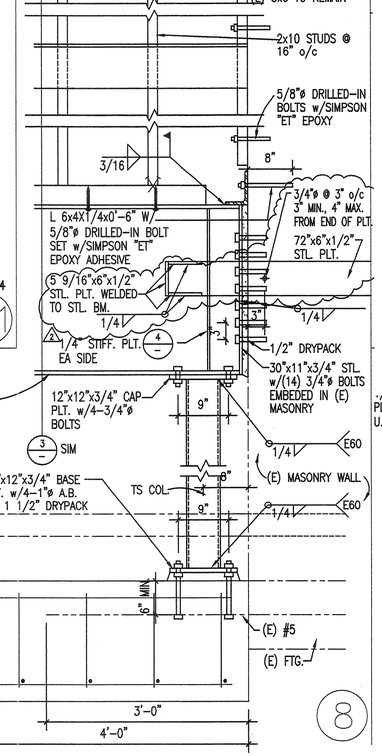

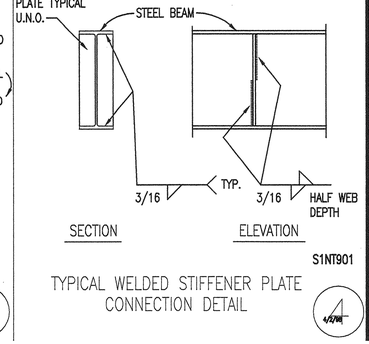

S1NT901

TYPICAL WELDED STIFFENER PLATE CONNECTION DETAIL 4 4/97

GENERAL NOTES AND TYPICAL DETAILS

DRAWN	•
CHECKED	• L.M.
SCALE	• AS NOTED
DATE	• 11-02
JOB	•
SHEET	•

S0.2

28-224 AutoDATE: 11/10/2000 11:17

DRAWING NUMBER

PLAN HOLD CORPORATION • IRVINE, CALIFORNIA
REORDER BY NUMBER 075AR

DRAWING NUMBER V1-148

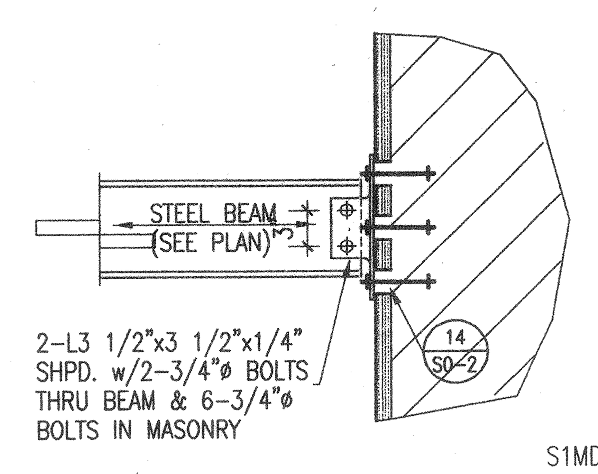

STL. BM. TO MASONRY WALL (revision 5, 4/6/99) — 13

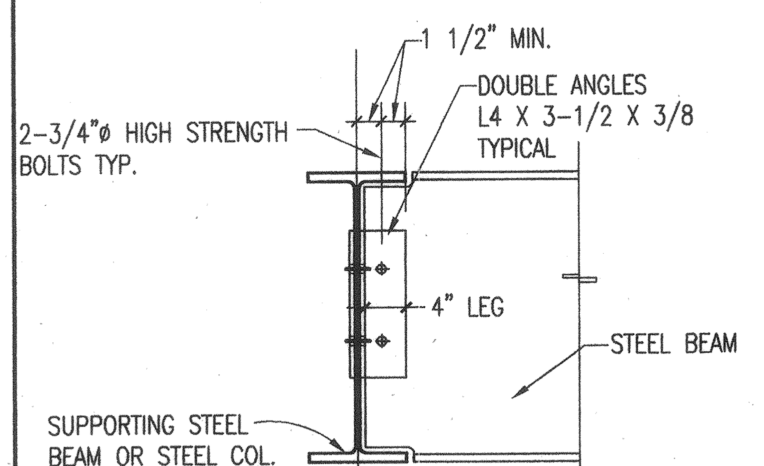

TYPICAL SHEAR BEAM CONNECTION DETAIL (revision 5) — 14

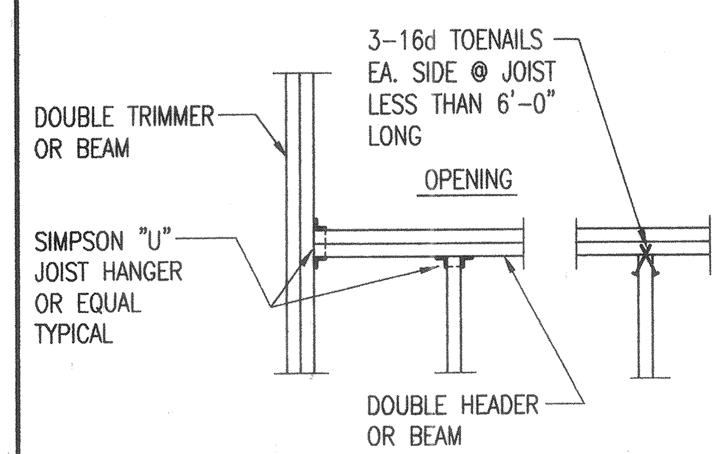

TYPICAL JOIST AND RAFTER FRAMING AT OPENING — 9

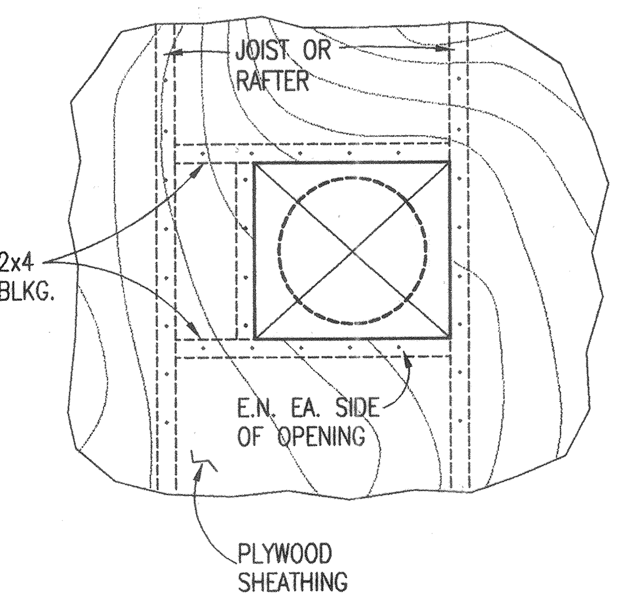

TYPICAL ROOF OPENING — 10 (12/21/93)

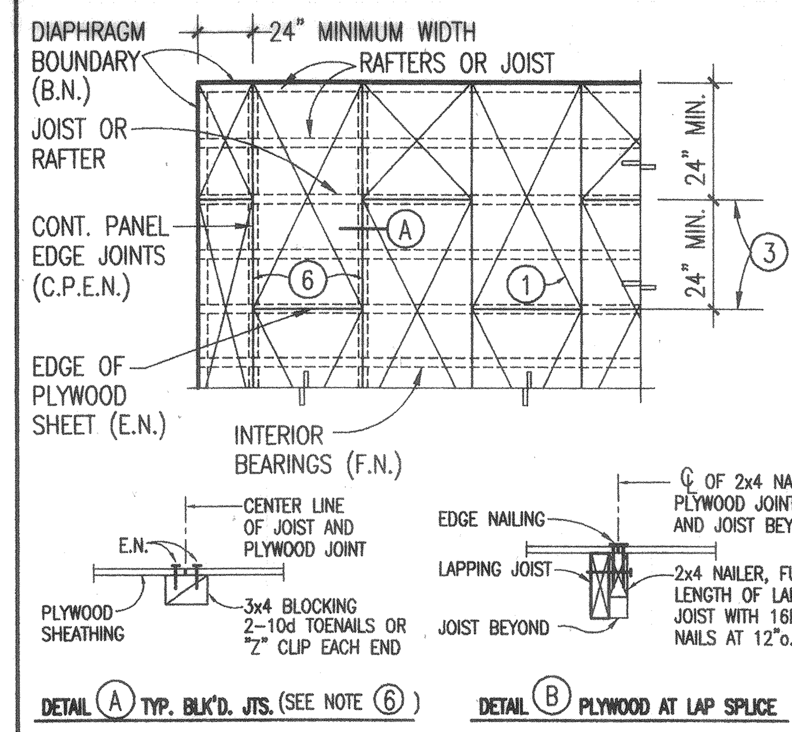

TYPICAL PLYWOOD ROOF SHEATHING — 1

NOTES:

1. PLYWOOD PS-1-95 STRUCTURAL I U.N.O.
2. RUN LONG DIMENSION OF PLYWOOD SHEETS ACROSS (PERPENDICULAR TO) JOISTS OR RAFTERS.
3. STAGGER PLYWOOD END JOINTS 24" MIN.
4. FRAMING TO BE ON A 4'-0" MODULE TO COINCIDE WITH THE PLYWOOD PATTERN.
5. FRAMING SHALL BE 3x OR WIDER & NAILS STAGGERED WHERE NAILS ARE SPACED 2", 2-1/2" OR 3" O.C.
6. BLOCK EDGE JOINTS ONLY WHERE CALLED FOR ON FLOOR OR ROOF PLANS. SEE DETAIL (A) BELOW.
7. FOR PLYWOOD THICKNESS, GRADE, NAILING AND AND BLOCKING SEE FLOOR OR ROOF FRAMING PLANS.
8. MINIMUM NAILING: U.N.O. SEE ROOF PLANS
   B.N.--10d @ 6" O.C. AT DIAPHRAGM BOUNDARY, CONT. PLATE LINES, CHORDS, TIES AND AS NOTED.
   C.P.E.N.--USE B.N. WHERE CONT. PLYWD EDGES ARE BLOCKED.
   E.N.--10d @ 6" O.C. AT ALL BEARING ENDS AND EDGES OF EACH PLYWOOD SHEET.
   F.N.--10d @ 12" O.C. (ROOF) 10d @ 10" O.C. (FLOOR) AT ALL INTERIOR BEARINGS OF PLYWOOD SHEETS.
9. NAILS SHALL HAVE A MIN. 3/8" EDGE DISTANCE.

W5WT001 (10/2/01)

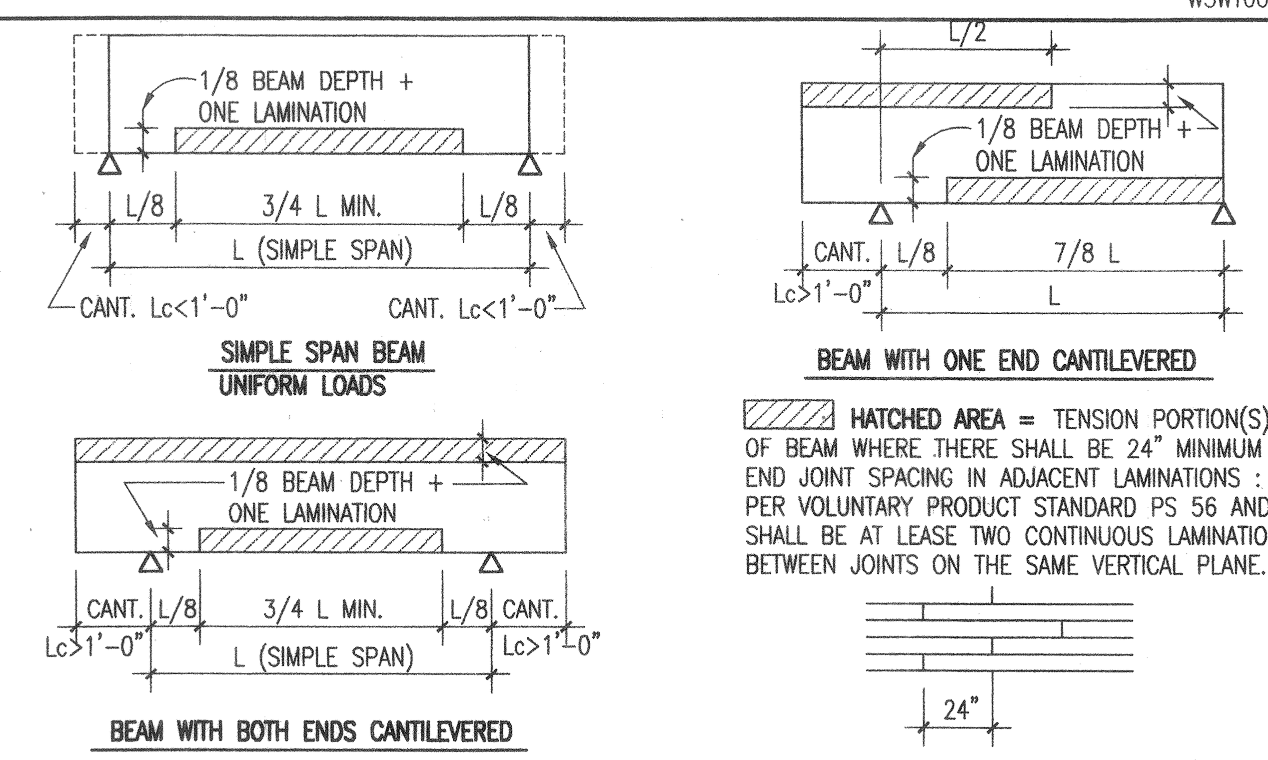

HATCHED AREA = TENSION PORTION(S) OF BEAM WHERE THERE SHALL BE 24" MINIMUM END JOINT SPACING IN ADJACENT LAMINATIONS : PER VOLUNTARY PRODUCT STANDARD PS 56 AND SHALL BE AT LEASE TWO CONTINUOUS LAMINATIONS BETWEEN JOINTS ON THE SAME VERTICAL PLANE.

W2ND900

SPACING OF END JOINT IN LAMINATIONS IN G.L.B. — 2

LUMBER:

1. ALL STRUCTURAL SAWN LUMBER SHALL BE DOUGLAS FIR-LARCH OF THE FOLLOWING GRADES, UNLESS NOTED OTHERWISE:
   2X2, 2X3, 2x4, 3X3 & 3X4 --------- NO 2, Fb = 1300 PSI
   2X6, 3X6, & 4X6 --------------- NO 1, Fb = 1300 PSI
   2X8, 3X8, & 4X8 --------------- NO 1, Fb = 1200 PSI
   2X10, 3X10, & 4X10 ------------- NO 1, Fb = 1100 PSI
   2X12, 3X12, & 4X12 ------------- NO 1, Fb = 1000 PSI
   2X14, 3X14, & 4X14 ------------- NO 1, Fb = 900 PSI
   ALL SIZES OF 6X ------ SELECT STRUCT. Fb = 1500 PSI
   2X & 3X DECKING ------SELECT DEX Fb = 1750 PSI
   SILL PLATES-HEM FIR (WOLMANIZED)-COMMERCIAL, Fb = 1150 PSI
2. ALL STRUCTURAL LUMBER SHALL BE GRADED IN ACCORDANCE WITH GRADING AND DRESSING RULES #17 OF THE WEST COAST INSPECTION BUREAU.
3. ALL WOOD BEARING ON CONCRETE OR MASONRY SHALL BE PRESSURE TREATED HEM-FIR, ALL FIELD CUTS SHALL BE FIELD TREATED BY AWPA METHOD H-84
4. STRUCTURAL MEMBERS SHALL NOT BE CUT FOR PIPES, ETC., UNLESS SPECIFICALLY DETAILED OR NOTED.
5. 2" SOLID BLOCKING SHALL BE PLACED BETWEEN JOISTS OR RAFTERS AT ALL SUPPORTS.
6. CROSS BRIDGING SHALL BE PROVIDED 8'-0" o.c. MAXIMUM FOR ALL ROOF JOISTS OR RAFTERS MORE THAN 8" IN DEPTH. & ALL FLOOR JOISTS MORE THAN 4" IN DEPTH USE 2X3 OR AN APPROVED TYPE OF METAL BRIDGING.
7. PLYWOOD USED ON ROOF & SHEAR WALLS SHALL BE GRADE MARKED STRUCTURAL PS-1-95.
8. NOTCH ALL JOISTS AND RAFTERS, AS REQUIRED, FOR FULL BEARING ON JOIST HANGERS & PLATES, MINIMIZE WOOD REMOVAL AND OVER CUTTING.
9. BOLTS, ASTM A-307, WITH STANDARD CUT WASHERS BETWEEN WOOD, NUTS & BOLT HEADS (USE MALLEABLE IRON WASHERS WHERE BOLTS ARE IN TENSION.)
10. BOLTS WITH "UPSET" OR "ROLLED" THREADS ARE NOT ALLOWED. BOLT DIAMETERS INDICATED ARE SHANK DIAMETERS.
11. HOLES FOR BOLTS SHALL BE BORED 1/32" TO 1/16" LARGER THAN THE NOMINAL BOLT DIAMETER.
12. RETIGHTEN ALL BOLTS JUST PRIOR TO BEING INCLOSED.
13. MACHINE APPLIED NAILING:
    USE OF MACHINE APPLIED NAILING IS SUBJECT TO SATISFACTORY JOB SITE DEMOSTRATION FOR EACH PROJECT AND THE APPROVAL BY THE PROJECT ARCHITECT OR STRUCTURAL ENGINEER . THE APPROVAL IS SUBJECT TO CONTINUED SATISFACTORY PERFORMANCE. MACHINE NAILING WILL NOT BE APPROVED IN 5/16" PLYWOOD. IF NAILHEADS PENETRATE THE OUTER PLY MORE THAN WOULD BE NORMAL FOR A HAND HAMMER OR IF MINIMUM ALLOWABLE EDGE DISTANCES ARE NOT MAINTAINED THE PERFORMANCE WILL BE DEEMED UNSATISFACTORY.

GLUE LAMINATED MEMBERS:

1. ALL GLUE LAMINATED MEMBERS SHALL BE MARKED WITH "QUALITY MARK" AND, IN ADDITION, A CERTIFICATE OF CONFORMANCE WITH PRODUCT STANDARD PS 56-73 "STRUCTURAL GLUED LAMINATED TIMBERS."

*2. INTERIOR GLB----DOUGLAS FIR, COMBINATION 24F-V8, DF/DF
*3. EXTERIOR GLB--ALASKA CEDAR, COMBINATION 20F-V12, AC/AC
*4. APPEARANCE GRADE-------------------ARCHITECTURAL
*5. GLUE----------------------------EXTERIOR GLUE

NAILING SCHEDULE: (ALL NAILS SHALL BE COMMON, GALVANIZED WHERE EXPOSED)

1. JOISTS OR RAFTERS TO SIDE OF STUDS 8" JOISTS OR LESS-----------------------------------3-16d
   FOR EACH ADDITIONAL OF 4" OF DEPTH------------1-16d
2. JOISTS & RAFTERS TO ALL BEARINGS
   TOENAILS EACH SIDE------------------------ 2-10d
3. STUDS TO BEARING TOENAIL EACH SIDE----------- 2-10d
4. BLOCKING BETWEEN JOISTS OR RAFTERS;
   TOENAILS TO JST. OR RFTR. EA. SIDE, EA. END.-------2-10d
5. BLOCKING BETWEEN STUDS EACH END;-------------2-16d
   OR TOENAIL-------------------------------2-10d
6. SHEATHING OR LET-IN BRACING EACH END, EA. BOARD
   1x6-----------------3-8d
   1x8-----------------4-8d
   INTERMEDIATE BEARING 1x6-----------------2-8d
   1x8-----------------3-8d
7. CROSS BRIDGING TOENAIL EACH END-------------- 2-8d
8. RIBBONS TO STUDS-------1xRIBBON-------------- 2-8d
   2xRIBBON-------------- 2-16d
9. DOUBLE TOP PLATE
   LOWER PLATE TO TOP OF STUDS---------------- 2-16d
   UPPER PLATE TO LOWER PLATE------- STAGG. 16d @ 12"o.c.
   ENDS OF UPPER & LOWER PLATES---------------- 3-16d
10. MULTIPLE STUDS------------------STAGG. 16d @ 12"o.c.
11. BUILT-UP BEAMS
    10" OR LESS IN DEPTH ALONG EACH EDGE----16d @ 16"o.c.
    MORE THAN 10"----------STAGG. - 1/2" BOLTS @ 24"o.c.
12. DOUBLE JOIST UNDER PARTITIONS
    WHERE BLOCKED APART, EACH JOIST, EACH BLOCK---- 2-16d
    WHERE NOT BLOCKED-------------STAGG. 16d @ 12"o.c.

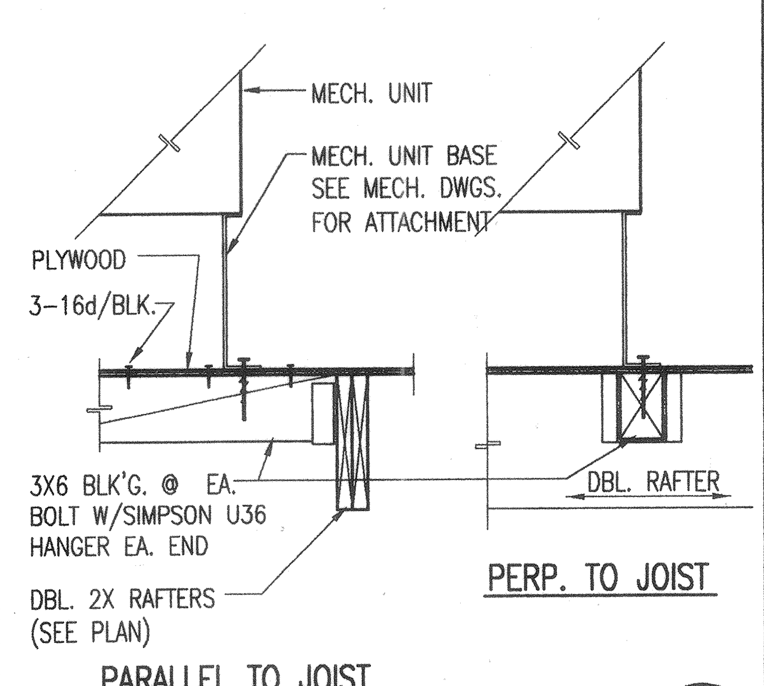

MECH. UNIT SUPPORT DET. — 11

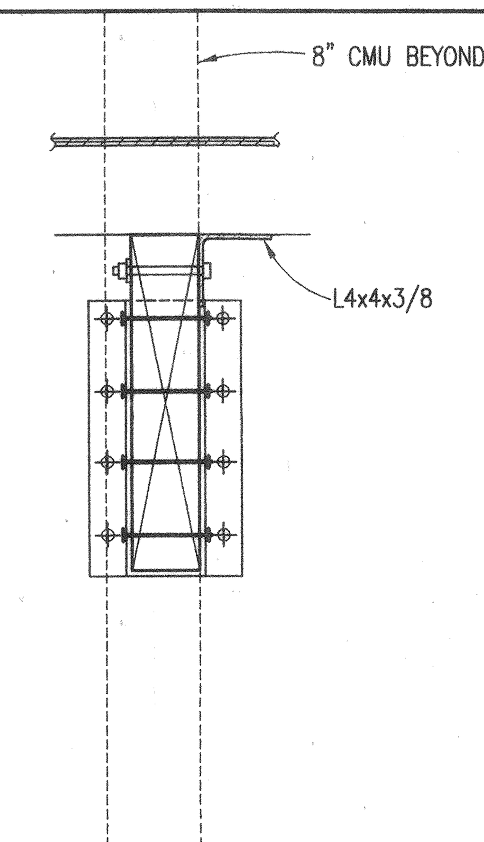

7

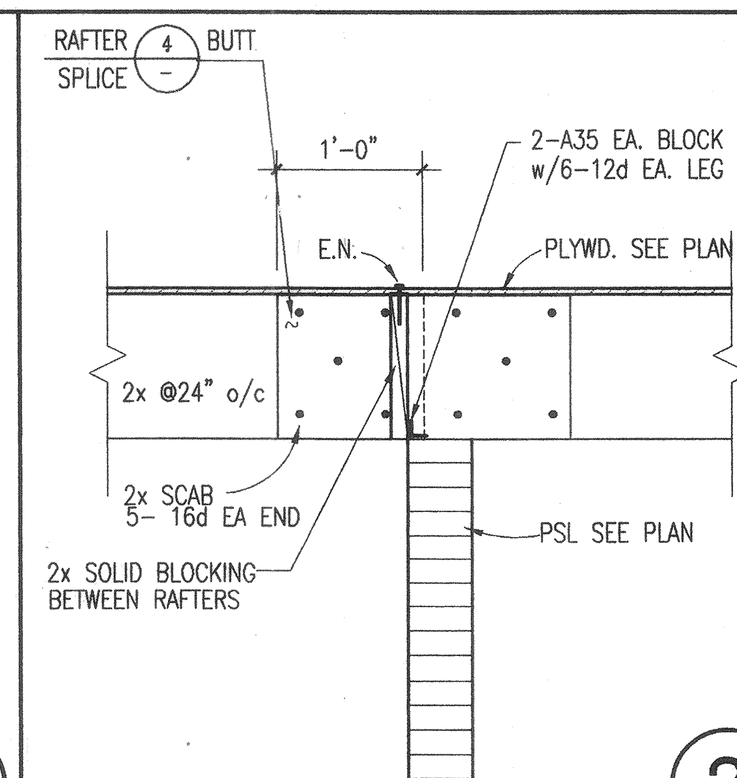

3

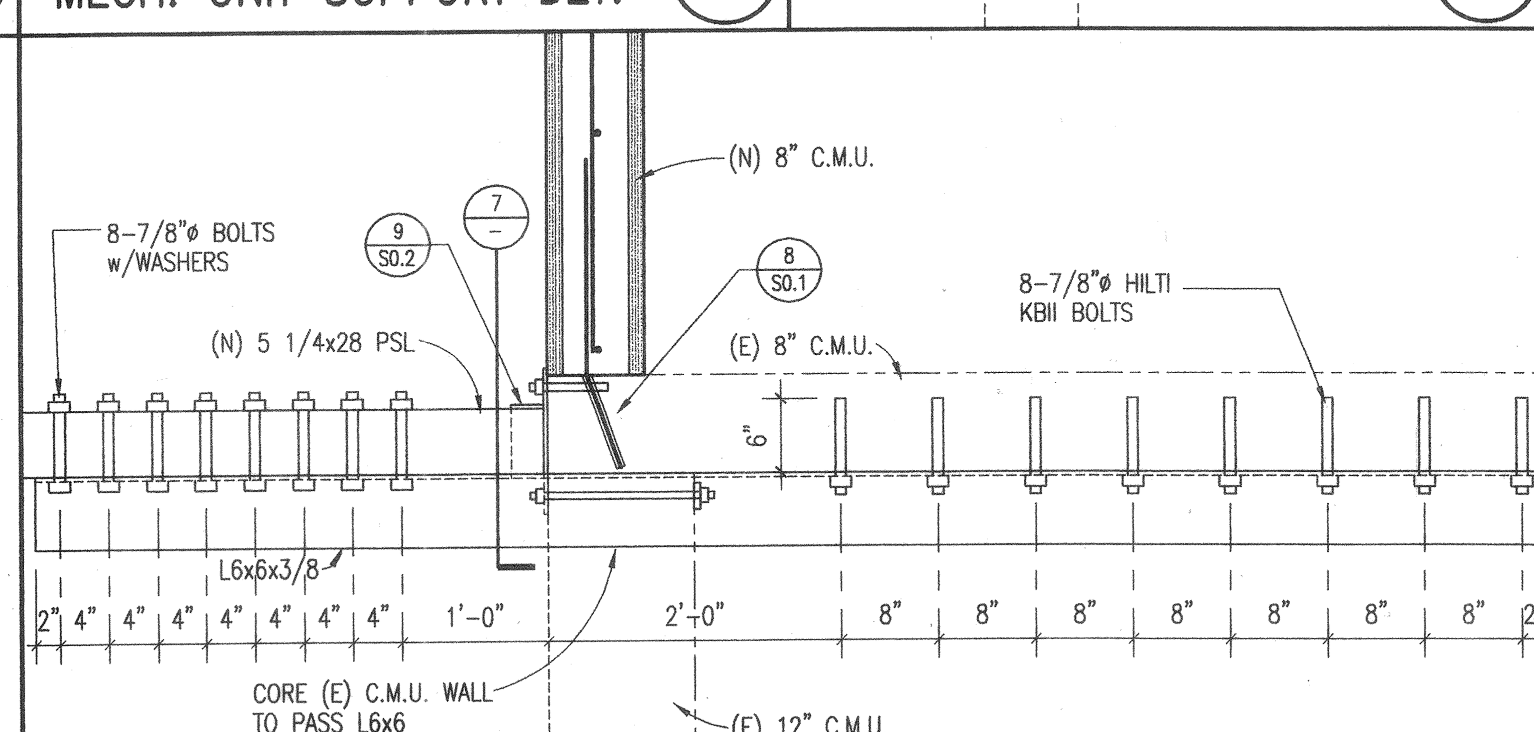

PLAN — 8

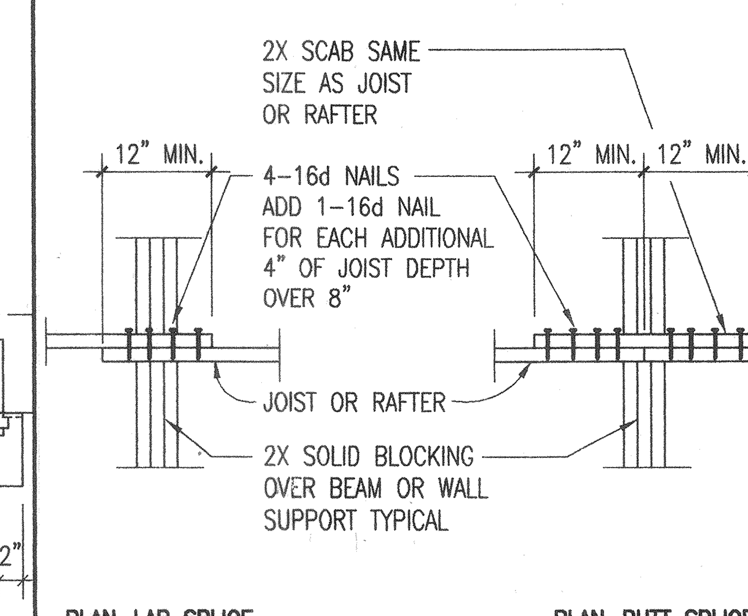

W1NT300

TYPICAL JOIST OR RAFTER SPLICE DETAIL — 4 (5/11/93)

17 18 19 20 15 16

28-224A

PROJECT ARCHITECT •

KROH/BROESKE
A R C H I T E C T S

6180 BROCKTON AVE. SUITE 104
RIVERSIDE, CA. 92506-2228
TEL 909-788-5940
FAX 909-788-1365
E-MAIL: KBA111@AOL.COM

CONSULTANTS •

JN JOHNSON & NIELSEN ASSOCIATES
CONSULTING STRUCTURAL ENGINEERS
647 N. Main St. Suite 4B, Riverside CA. 92501 (909)686-5122

REGISTERED PROFESSIONAL ENGINEER — LONNIE MOUNT No. 3834 Exp. Date 3-31-04 STRUCTURAL STATE OF CALIFORNIA

LICENSED ARCHITECT — No. C00917 Ren 11/30/03 STATE OF CALIFORNIA

PROJECT •

VILLEGAS PARK
CITY OF RIVERSIDE

7240 MARGUERITA AVENUE
Riverside, Ca.

REVISION •
2 PLAN CHECK REVISIONS 4-18-03
5 PLAN CHECK REVISIONS 8-18-03

THIS DRAWING AND THE DESIGNS, ARRANGEMENTS, DEPICTIONS, IDEAS AND OTHER INFORMATION CONTAINED HEREIN CONSTITUTE UNPUBLISHED WORK OF KROH/BROESKE ARCHITECTS AND SHALL REMAIN PROPERTY OF KROH/BROESKE ARCHITECTS IN PERPETUITY. NO PART THEREOF SHALL BE REPRODUCED, COPIED, DISCLOSED, DISTRIBUTED,SOLD, PUBLISHED OR OTHERWISE USED IN ANYWAY WITHOUT THE ADVANCE EXPRESS WRITTEN CONSENT OF KROH/BROESKE ARCHITECTS. VISUAL CONTACT WITH THE ABOVE DRAWINGS, OR ANY PART THEREOF, SHALL CONSTITUTE CONCLUSIVE EVIDENCE OF ACCEPTANCE OF THESE RESTRICTIONS.

SHEET TITLE •

GENERAL NOTES AND TYPICAL DETAILS-WOOD

DRAWN	•
CHECKED	• L.M.
SCALE	• AS NOTED
DATE	• 11-02
JOB	•
SHEET	•

S0.3

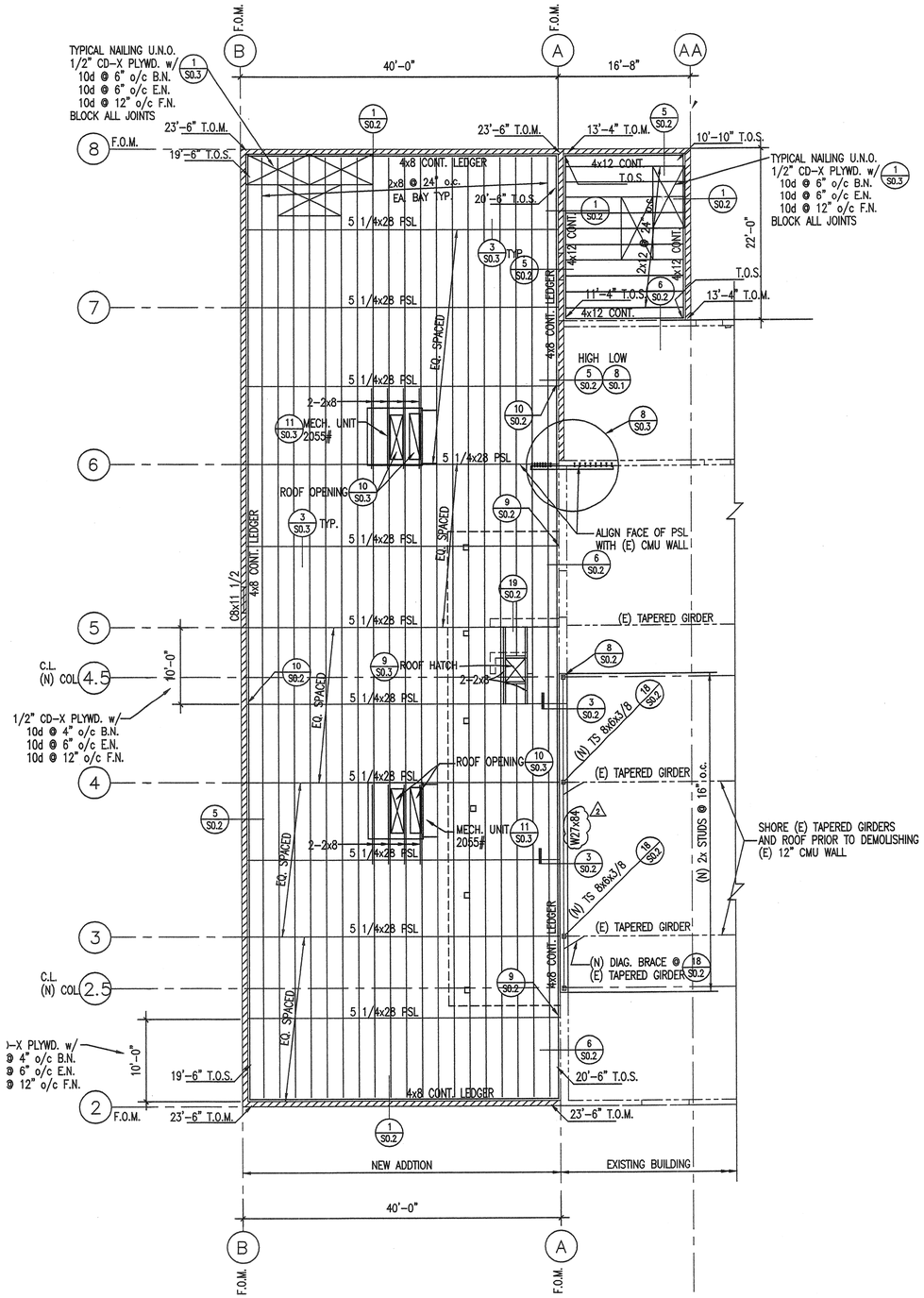

ROOF FRAMING PLAN
1/8"=1'-0"

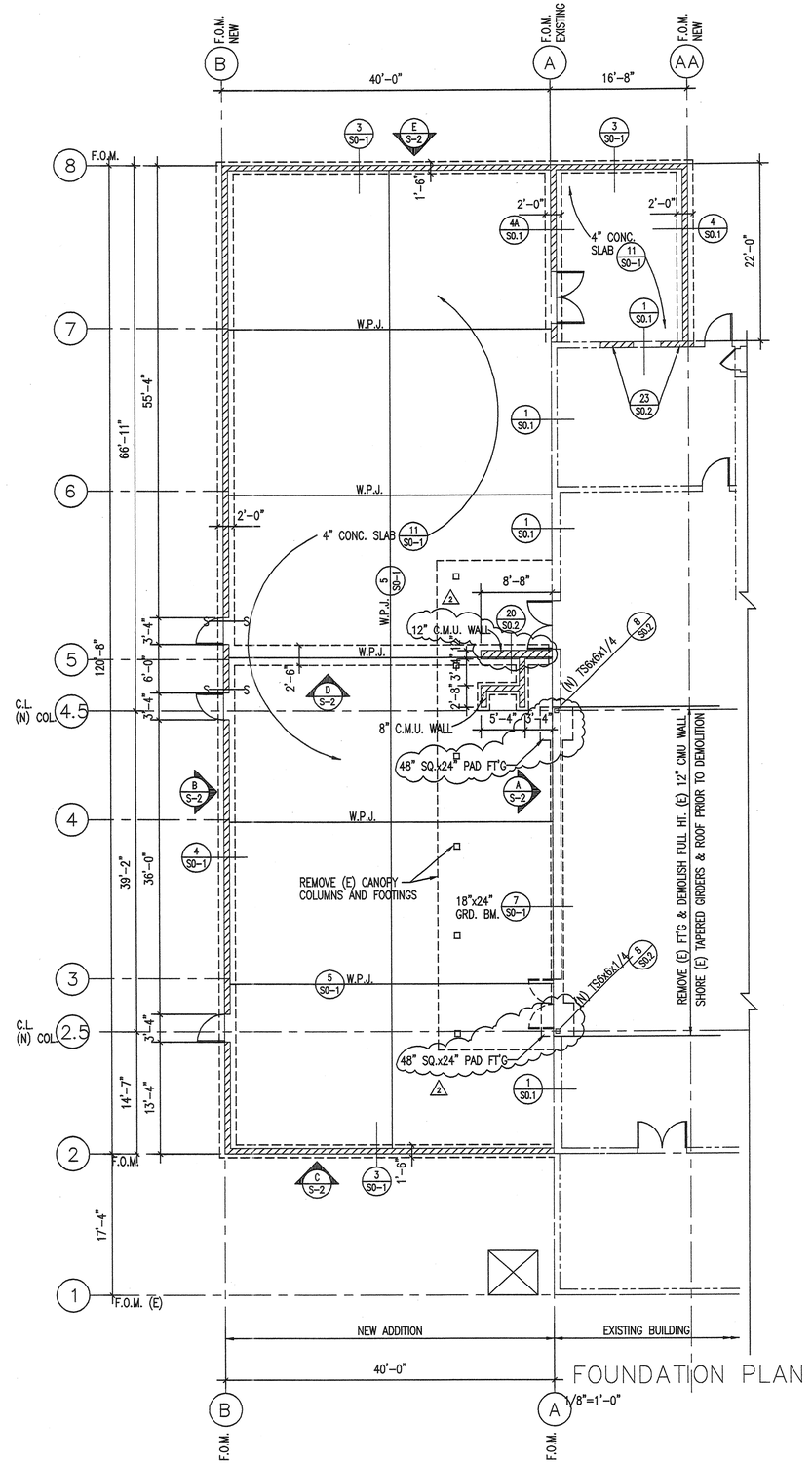

FOUNDATION PLAN
1/8"=1'-0"

28-224

PROJECT ARCHITECT •
KROH/BROESKE
ARCHITECTS
6180 BROCKTON AVE. SUITE 104
RIVERSIDE, CA. 92506-2228
TEL 909-788-5940
FAX 909-788-1365
E-MAIL: KBA111@AOL.COM

CONSULTANTS •
JOHNSON & NIELSEN ASSOCIATES
CONSULTING STRUCTURAL ENGINEERS
647 N. Main St. Suite 4B, Riverside CA. 92501 (909)889-9122

REGISTERED PROFESSIONAL ENGINEER
LONNIE MOUNT
No. 3834
Exp. Date 3-31-04
STRUCTURAL
STATE OF CALIFORNIA

PROJECT •

VILLEGAS PARK
CITY OF RIVERSIDE

7240 MARGUERITA AVENUE
Riverside, Ca.

REVISION •
4 PLAN CHECK REVISIONS 6-6-03

THIS DRAWING AND THE DESIGN, ARRANGEMENTS, INSTRUCTIONS, IDEAS AND OTHER INFORMATION CONTAINED HEREIN CONSTITUTE EXPRESSIVE WORK OF KROH/BROESKE ARCHITECTS AND SHALL REMAIN PROPERTY OF KROH/BROESKE ARCHITECTS IN PERPETUITY. NO PART THEREOF SHALL BE REPRODUCED, COPIED, DISCLOSED, DISTRIBUTED, SOLD, PUBLISHED OR OTHERWISE USED IN ANY WAY WITHOUT THE EXPRESS WRITTEN CONSENT OF KROH/BROESKE ARCHITECTS. WHEN CONTACT WITH THE ABOVE DRAWINGS, OR ANY PART THEREOF, SHALL CONSTITUTE CONCLUSIVE EVIDENCE OF ACCEPTANCE OF THESE RESTRICTIONS.

SHEET TITLE •

FOUNDATION AND ROOF FRAMING PLAN

DRAWN	•
CHECKED	• L.M.
SCALE	• AS NOTED
DATE	• 11-02
JOB	•
SHEET	•

S-1

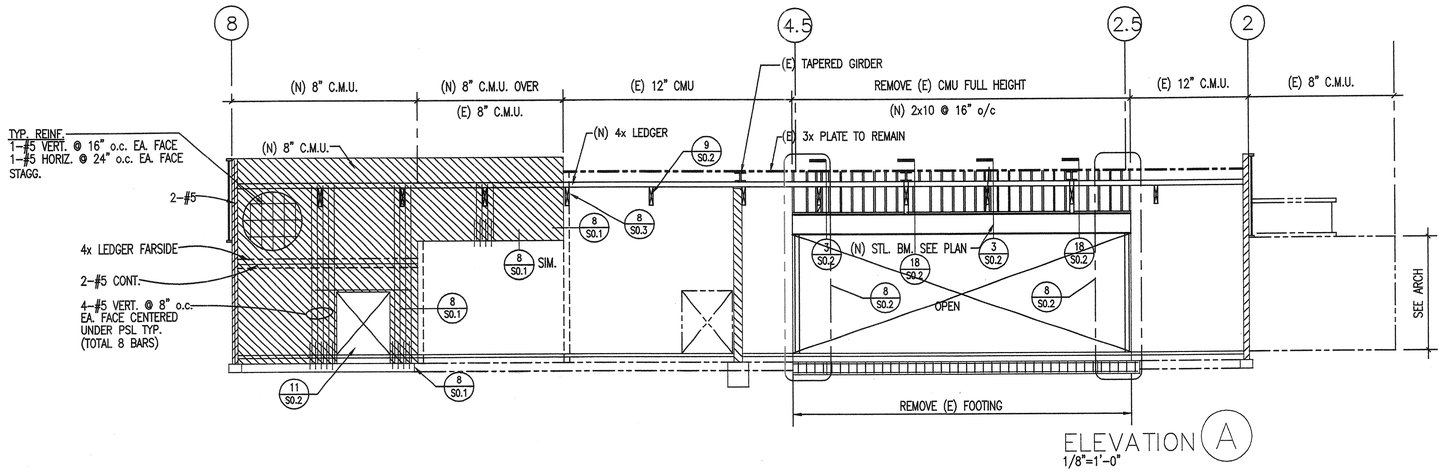

ELEVATION (A)
1/8"=1'-0"

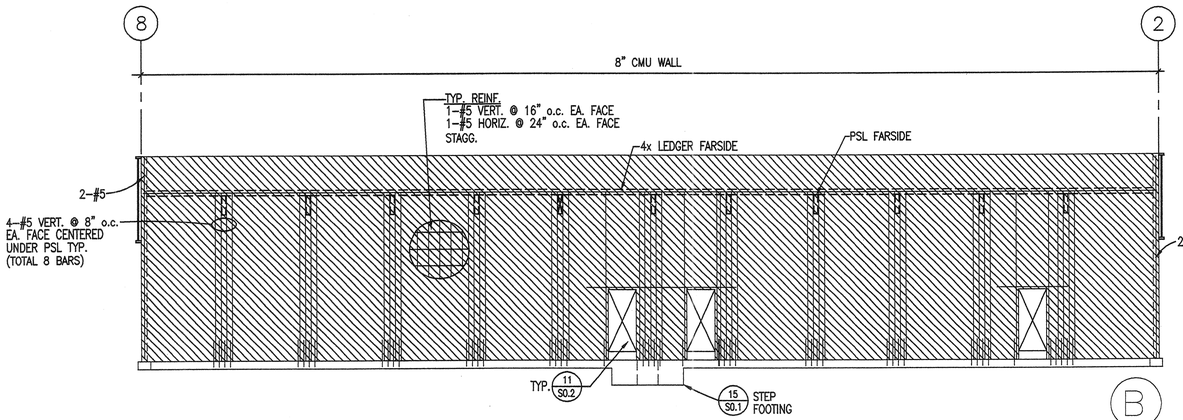

ELEVATION (B)
1/8"=1'-0"

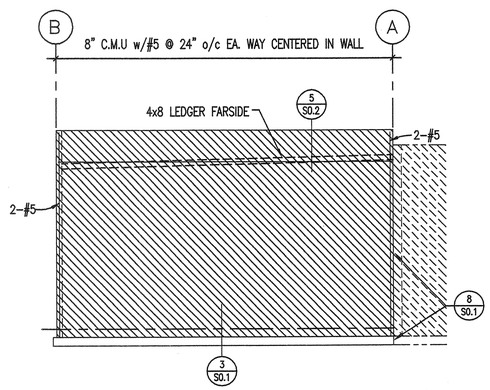

ELEVATION (C)
1/8"=1'-0"

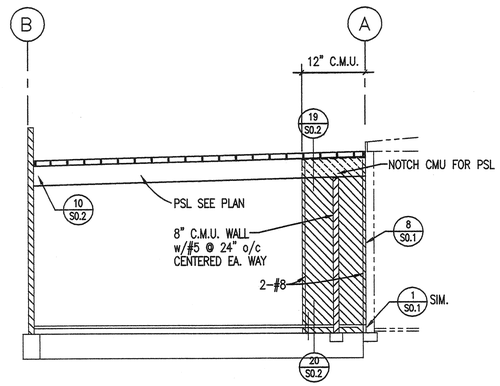

SECTION (D)
1/8"=1'-0"

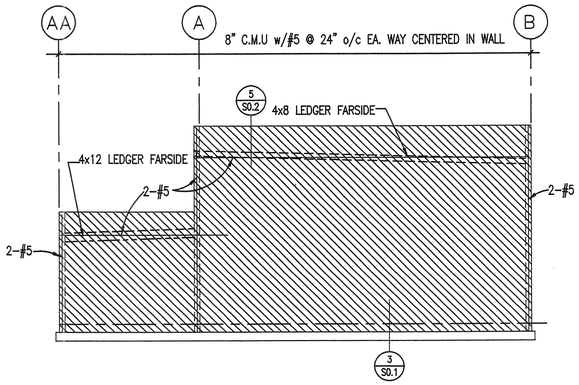

ELEVATION (E)
1/8"=1'-0"

28-224

PROJECT ARCHITECT •

KROH/BROESKE
ARCHITECTS
6180 BROCKTON AVE. SUITE 104
RIVERSIDE, CA. 92506-2228
TEL 909-788-5940
FAX 909-788-1365
E-MAIL: KBA111@ACL.COM

CONSULTANTS •

JOHNSON & NIELSEN ASSOCIATES
CONSULTING STRUCTURAL ENGINEERS
647 N. Ivie St. Suite 4B, Riverside Ca. 92501 (909)686-0122

REGISTERED PROFESSIONAL ENGINEER
LONNIE MOUNT
No. 3834
Exp. Date 3-31-04
STRUCTURAL
STATE OF CALIFORNIA

PROJECT •

VILLEGAS PARK
CITY OF RIVERSIDE

7240 MARGUERITA AVENUE
Riverside, Ca.

REVISION •

⚠1 PLAN CHECK REVISIONS 6-6-03

THE DRAWING AND THE DESIGNS, ARRANGEMENTS, DIMENSIONS, DETAILS AND OTHER INFORMATION CONTAINED HEREIN CONSTITUTE COPYRIGHTED WORK OF KROH/BROESKE ARCHITECTS AND SHALL REMAIN PROPERTY OF KROH/BROESKE ARCHITECTS. NO PART THEREOF SHALL BE COPIED, DISCLOSED, TRANSMITTED, STORED IN A RETRIEVAL SYSTEM OR USED IN ANY WAY WHATSOEVER WITHOUT THE PRIOR WRITTEN PERMISSION OF KROH/BROESKE ARCHITECTS. ANY UNAUTHORIZED USE OF THESE DRAWINGS, OR ANY PART THEREOF, SHALL CONSTITUTE CONCLUSIVE EVIDENCE OF ACCEPTANCE OF THESE RESTRICTIONS.

SHEET TITLE •

WALL ELEVATION

DRAWN •
CHECKED • L.M.
SCALE • AS NOTED
DATE • 11-02
JOB •
SHEET •

S-2

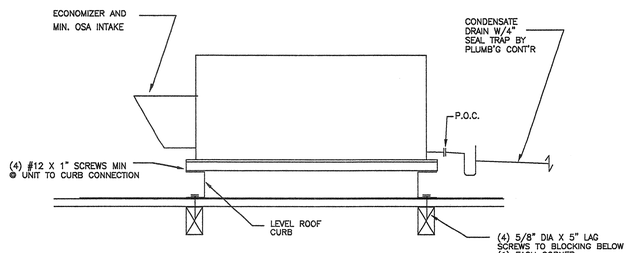

A/C UNIT ROOF MOUNTING DETAIL

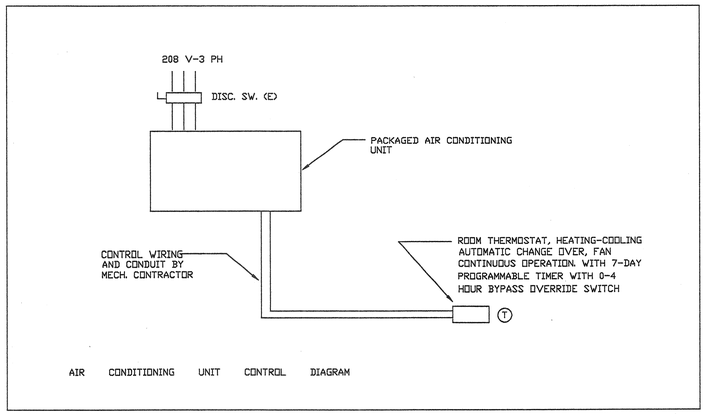

AIR CONDITIONING UNIT CONTROL DIAGRAM

HVAC SYMBOLS

SYMBOL	DESCRIPTION	SYMBOL	DESCRIPTION
	SUPPLY DUCT SECTION		EXHAUST DUCT SECTION
	RETURN DUCT SECTION	SFD	SMOKE & FIRE DAMPER W/ DUCT MTD SMOKE DETECTOR ASSEMBLY
	SUPPLY REGISTER/GRILLE	FD	FIRE DAMPER
	RETURN REGISTER/GRILLE		MANUAL VOLUME DAMPER
	EXHAUST REGISTER/GRILLE	UC	UNDER CUT DOOR
	LINED DUCT	ø	ROUND DUCT DIAMETER
	FLEXIBLE CONNECTION	OSA	OUTSIDE AIR
T	THERMOSTAT	CD	CEILING DIFFUSER
DAP	DUCT ACCESS PANEL	RR / RG	RETURN REGISTER/GRILLE
	90 DEGREE ROUND RADIUS ELBOW		SPIN-IN FITTING W/MVD TO RECT.DUCT
	T - FITTING		DUCT CROSSING
	FLEXIBLE CONN. TO AIR OUTLET		DUCT TAKE-OFF AT BOTTOM
	ROUND DUCT DROP		REDUCER
TG	TRANSFER GRILLE	ER/EG	EXHAUST REGISTER/GRILLE
SAD	SUPPLY AIR DUCT	RAD	RETURN AIR DUCT
UTR	UP THRU ROOF	EAD	EXHAUST AIR DUCT

AIR SOURCE HEAT PUMP UNIT

SYMBOL	MANUF.	MODEL	COOLING@ 105 F, BTUH			HEATING, BTUH - 47 F		SUPPLY AIR		ELECTRICAL				UNIT WT. LBS
			TOTAL	SEN.	EER	OUTPUT	COP	CFM	ESP	MCA	V	PH	HZ	
HP 1	CARRIER	50HJQ 014	137000	102000	9.3	136000	3.2	4500	0.8	65.0 AMP	280	3	60	2055
HP 2	CARRIER	50HJQ 014	137000	102000	9.3	136000	3.2	4500	0.8	65.0 AMP	280	3	60	2055

1. HP-1 AND HP-2 SHALL HAVE INTEGRATED ECONOMILZER W/HOOD, ROOM STATIC PRESSURE SENSOR, POWER EXHAUST.
2. FOR AIR MOVING SYSTEMS SUPPLYING MORE THAN 2000 CFM, PROVIDE DUCT MOUNTED SMOKE DETECTOR AT MAIN SUPPLY DUCT. WHEN THE SMOKE DETECTOR IS ACTIVATED, THE SUPPLY FAN SHALL BE AUTOMATICALLY SWITCHED OFF BY INTERRUPING THE POWER SOURCE. SMOKE DETECTOR SHALL BE UL LISTED AND SHALL BE INSTALLED IN ACCORDANCE WITH MANUFACTURER'S INSTRUCTION.

   WHERE FIRE DETECTION OR ALARM SYSTEMS ARE PROVIDED FOR THE BUILDING, THIS DUCT MOUNTED SMOKE DETECTORS SHALL BE SUPERVISED BY SUCH SYSTEM.

   THIS ITEM #2 IS APPLICABLE FOR BOTH HP-1 & HP-2. WHEN ANY ONE OF THE DUCT MOUNTED SMOKE DETECTOR IS ACTIVATED, THE BLOWER OF BOTH HEAT PUMP UNITS SHALL BE SHUT OFF.

   THIS CONTRACTOR SHALL FURNISH THE SMOKE DETECTORS TO ELECTRICAL CONTRACTOR TO INSTALL.

   THE ELECTRICAL WIRING SYSTEM INCLUDING ELECTRICAL PANELS, RELAYS, TRANSFORMERS, WIRING AND CONDUIT SHALL BE FURNISHED AND INSTALLED BY ELECTRICAL CONTRACTOR.
3. ALL NEW UNITS SHALL BE INTEGRATED WITH OWNERS EXISTING ENERGY MANAGEMENT SYSTEM. PROVIDE 3/4 CONDUIT FROM EACH UNIT TO EXISTING PANEL IN TELEPHONE CLOSET. (5)

HVAC NOTES

1. ALL WORK SHALL CONFORM TO LOCAL CODES.
2. THIS CONTRACTOR SHALL PAY FOR ALL PERMITS AND FEES.
3. CONTROL LOW VOLTAGE WIRING AND CONDUIT BY MECHANICAL CONTRACTOR.
4. CONDENSATE PIPING AND FINAL CONNECTION TO A/C UNIT BY PLUMBING CONTRACTOR.
5. HEAT PINP UNIT ROOF CURB OR PLATFORM BY GENERAL CONTRACTOR.
6. CONNECT MAIN DUCTS OR PLENUM TO HEAT PUMP UNIT WITH FLEXIBLE CONNECTIONS.
7. DIMENSION OF DUCT SHOWN ON DRAWINGS ARE INSIDE CLEAR SIZE. LINE 10 FT OF MAIN DUCTS OR PLENUM WITH 1" THICK SOUND ABSORBENT MATERIAL AND WHERE INDICATED ON THE DRAWINGS.
8. DUCTWORK SHALL BE GAL. SHEET STEEL WITH INSULATION HAVING A VALUE OF R = 4.2.
9. PROVIDE 30% EFFICIENCY THROWAWAY FILTER FOR HEAT PUMP UNITS.
10. THIS CONTRACTOR SHALL COORDINATE WITH GENERAL CONTRACTOR FOR SIZE AND LOCATION OF ROOF OPENING AND FIRE WALL PENETRACTION FOR DUCTWORK; AND WITH ELECTRICAL CONTRACTOR FOR ELECTRICAL REQUIREMENTS FOR ALL MECHANICAL EQUIPMENT.
11. ALL DUCTWORK SHALL BE CONSTRUCTED, SUPPORTED AND SEALED PER UMC CHAPTER 6.
12. ALL DUCTWORK HANGER STRAPS SHALL BE SECURED TO STRUCTURAL MEMBERS.
13. ROUND AND RECTANGULAR DUCTWORK ARE INTERCHANGEABLE IF FRICTION PER 100 FEET ARE EQUAL. SUBSTITUTE ROUND DUCT WITH RECTANGULAR DUCT WHEN SPACE IS LIMITED AT NO ADDITIONAL COST TO THE OWNER.
14. FIRE DAMPER IS REQUIRED FOR ALL DUCT PENETRATIONS AT FIRE SEPARATION WALL AND CEILING.
15. CEILING DIFFUSERS SHALL BE KRUEGER SERIES 6500 WITH PERFORATED PLATE; FRAME STYLE SHALL BE COMPATIBLE WITH THE TYPE OF CEILING USED. PERFORATED RETURN AIR REGISTERS SHALL BE KRUEGER 6590. MATERIAL SHALL BE ALUMINUM OR STEEL. FINISH SHALL BE BAKED ENAMEL WHITE. BOTH SUPPLY DIFFUSERS AND RETURN REGISTERS SHALL HAVE O.B.D.; ANEMOSTAT, METALAIRE OR APPROVED EQUAL.
16. PROVIDE BACKDRAFT DAMPER FOR ALL EXHAUST FANS.
17. THIS CONTRACTOR SHALL TEST AND BALANCE THE AIR DISTRIBUTION SYSTEM AS SHOWN ON THE DRAWINGS AND SHALL SUBMIT A REPORT TO THE ARCHITECT FOR APPROVAL.
18. ANY MATERIAL OR EQUIPMENT OTHER THAN THAT INDICATED ON THE DRAWINGS SHALL NOT BE USED UNLESS APPROVED IN WRITING BY THE ENGINEER. ANY CHANGE IN MECHANICAL, ELECTRICAL AND OTHER SYSTEMS REQUIRED DUE TO SUCH SUBSTITUTION SHALL BE THE RESPONSIBILITY OF THE MECHECHANICAL CONTRACTOR AND AT NO ADDITIONAL COST TO THE OWNER.
19. FIBERGLASS FLEXIBLE DUCT OR ALUMINUM FLEXIBLE DUCT SHALL NOT BE USED.
20. EXTERIOR SURFACE OF EXPOSED SHEET METAL DUCT SHALL BE PAINTED. COLOR OF PAINT SHALL BE AS DIRECTED BY THE ARCHITECT.

HVAC SYSTEM MANDATORY MEASURES

SEC. 111	Any appliance for which there is a California standard established in the Appliance Energy Regulations will comply with the applicable standard.
SEC 115(a)	Fan type central furnaces shall not have a pilot light.
SEC. 123	Piping, except that conveying fluids at temperature between 80 and 105 degrees F, or within HVAC equipment, shall be insulated in accordance with Standard Section 123.
SEC. 124	Air handling duct systems shall be installed and insulated in compliance with Section 601, 603 and 604 of the Uniform Mechanical Code.
SEC 122(e)	Each space conditioning system shall be installed with one of the following:
SEC 122(e)1A	Each space conditioning system serving building types such as offices and manufacturing facilities (and all others not explicity exempt from the requirements of Sec 112 (d) shall be installed with an automatic time switch with an accessable manual override that allows operation of the system during off-hours for up to 4-hours. The time switch shall be capable of programming different schedules for weekdays and weekends; incorporate an automatic holiday "shut-off' feature that turns off all loads for at least 24 hours, than resumes the normally scheduled operation; and has program backup capabilities that prevent the loss of the device's program and time setting for at least 10 hours if power is interrupted; or
SEC 122(e)1B	An occupancy sensor to control the operating period of the system; or
SEC 122(e)1C	A 4-hour timer that can be manually operated to control the operating period of the system.
SEC 122(e)2	Each space conditioning system shall be installed with controls that temporarily restart and temporarily operate the system as required to maintain a setback heating and/or a set-up cooling thermostat setpoint.
SEC 122(a&b)	Each space conditioning system shall be controlled by an individual thermostat that responds to temperature within the zone. Where used to control heating, the control shall be adjustable down to 55 degrees F or lower. For cooling, the control shall be adjustable up to 85 degrees F or higher. Where used for both heating and cooling, the control shall be capable of providing a deadband of at least 5 degrees F within which the supply of heating and cooling is shut off or reduced to a minimum.
SEC 122(c)	Thermostats shall have numeric setpoints in degrees F and adjustable setpoint stops accessible only to authorized personnel.
SEC 122(b)	Heat pumps shall be installed with controls to prevent electric resistance supplementary heater operation when the heating load can be met by the heat pump alone.
SEC 121(e)	Control shall be provided to allow outside air dampers or devices to be operated at the ventilation rates as specified on these plans.
SEC 121(f)	Gravity or automatic dampers interlocked and closed on fan shutdown shall be provided on the outside air intakes and discharges of all space conditioning and exhaust systems.
SEC 121(f)	All gravity ventilating systems shall be provided with automatic or readily accessible manually operated dampers in all openings to the outside, except for combustion air openings.
SEC 121(f)1	Air Balancing: The system shall be balanced in accordance with the NEBB Procedural Standards (1983), or AABC National Standards (1989); or
SEC 121(f)2	Outside Air Certification: The system shall provide the minimum outside air as shown on the mechanical drawings, and shall be measured and certified by this installing licensed C-20 mechanical contractor and certified by (1) the design mechanical engineer, (2) the installing licenced C-20 mechanical contractor, or (3) the person with overall responsibility for the design of the ventilation system; or
SEC 121(f)3	Outside Air Measurement: The system shall be equipped with a calibrated local or remote device capable of measuring the quantity of outside air on a continuous basis and displaying that quantity on a readily accessible display divice.

PROJECT ARCHITECT
KROH/BROESKE
ARCHITECTS
6180 BROCKTON AVE. SUITE 104
RIVERSIDE, CA. 92506-2228
TEL 909-788-5940
FAX 909-788-1365
E-MAIL: KBA111@AOL.COM

CONSULTANTS
Mechanical Engineering
Advanced Environmental Engineering
4056 Williaker Drive
Irvine, CA. 92620
PH. 949.651.9393
FAX 949.651.9393

PROJECT

LICENSED ARCHITECT
JAMES L. BROESKE
No. C009174
Ren. 11-30-2003
STATE OF CALIFORNIA

VILLEGAS GYM EXPANSION

7240 MARGUERITA AVE.
RIVERSIDE, CA. 92504

REVISION
- 04-18-03 2nd PLAN CHECK REVISIONS
- 04-18-03 OWNER REQUESTED REVISIONS
- 06-12-03 3rd PLAN CHECK REVISIONS
- 08-12-03 PROJECT REVISIONS

THIS DRAWING AND THE DESIGNS, ARRANGEMENTS, DEPICTIONS, IDEAS AND OTHER INFORMATION CONTAINED HEREIN CONSTITUTE UNPUBLISHED WORK OF KROH/BROESKE ARCHITECTS AND SHALL REMAIN PROPERTY OF KROH/BROESKE ARCHITECTS IN PERPETUITY. NO PART THEREOF SHALL BE REPRODUCED, COPIED, DISCLOSED, DISTRIBUTED, PUBLISHED OR OTHERWISE USED IN ANYWAY WITHOUT THE EXPRESS AND WRITTEN CONSENT OF KROH/BROESKE ARCHITECTS. VISUAL CONTACT WITH THESE PLANS OR ANY PART THEREOF, SHALL CONSTITUTE CONCLUSIVE EVIDENCE OF ACCEPTANCE OF THESE RESTRICTIONS.

SHEET TITLE

HVAC NOTES AND EQUIPMENT SCHEDULE

DRAWN	A E E
CHECKED	W FUNG
SCALE	NONE
DATE	04-07-03
JOB	01021
SHEET	

M0.1

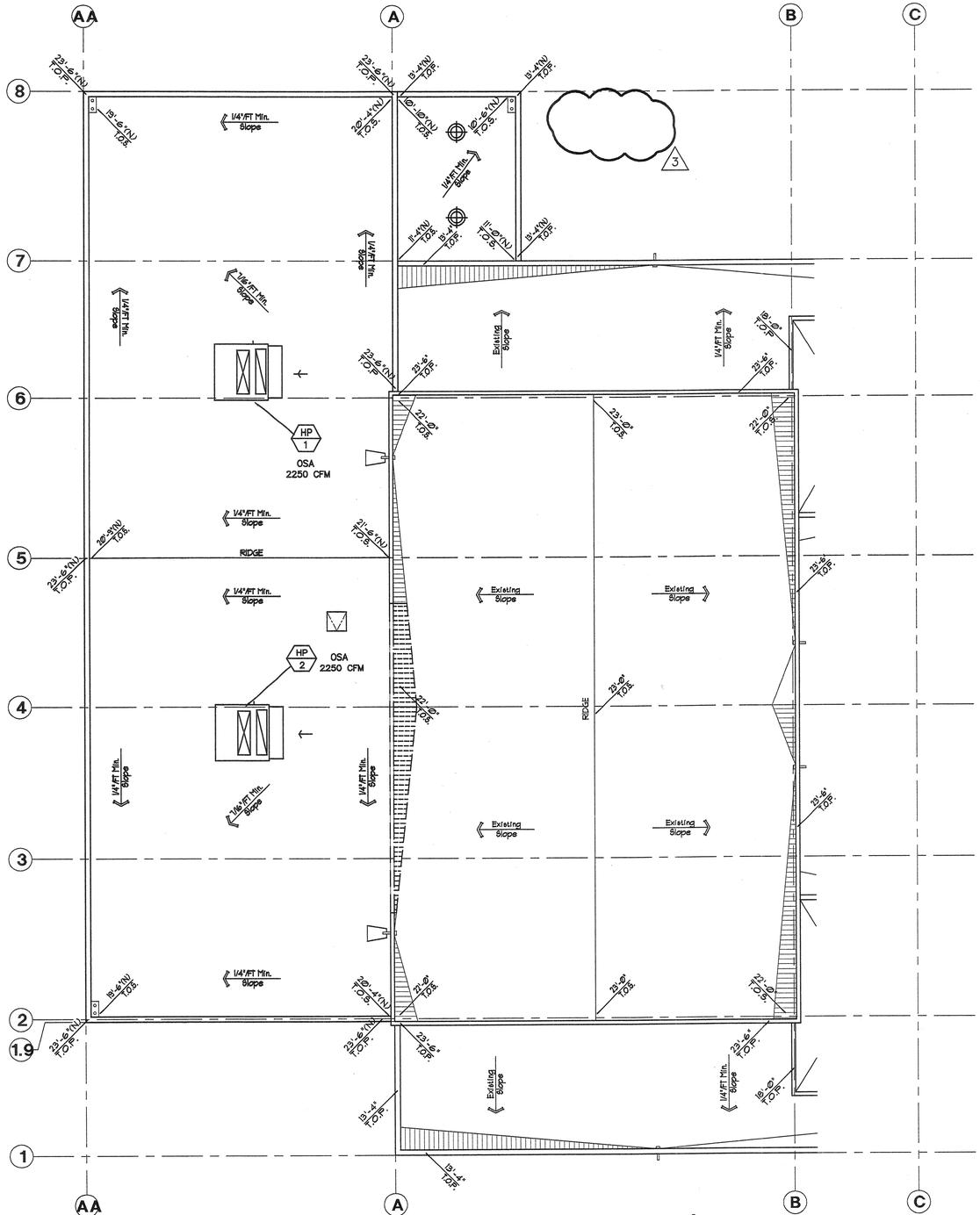

Roof Plan

1/8" = 1'-0"

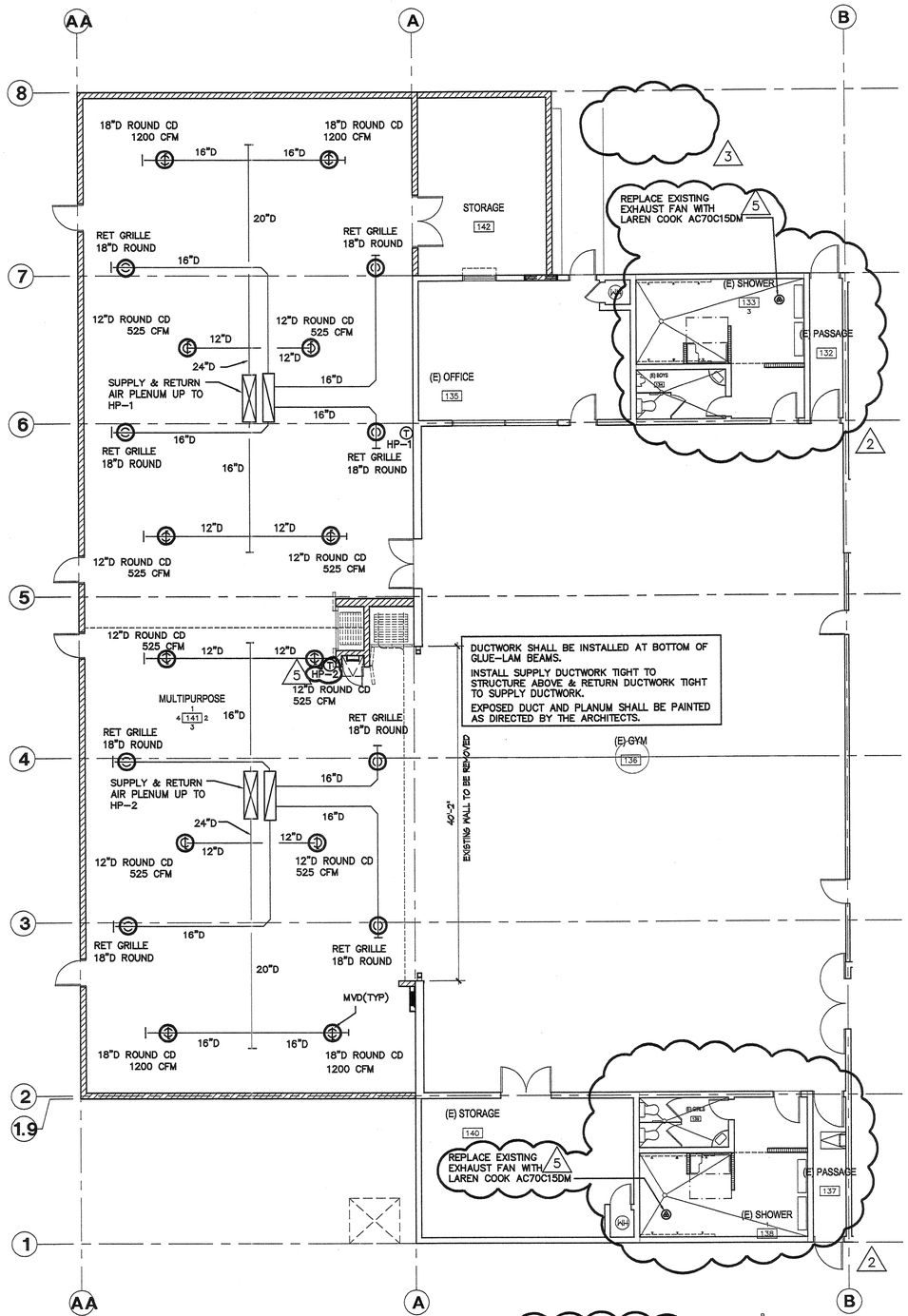

HVAC Floor Plan

1/8" = 1'-0"

PROJECT ARCHITECT •

KROH/BROESKE
ARCHITECTS

6180 BROCKTON AVE. SUITE 104
RIVERSIDE, CA. 92506-2228
TEL 909-788-5940
FAX 909-788-1365
E-MAIL: KBA111@AOL.COM

CONSULTANTS •

Mechanical Engineering
Advanced Environmental Engineering
4056 Willwax Drive
Irvine, CA 92620
PH. 949.651.9393
FAX 949.651.9393

PROJECT •

LICENSED ARCHITECT
JAMES L. BROESKE
No. C009174
Ren. 11-30-2005
STATE OF CALIFORNIA

VILLEGAS GYM EXPANSION

7240 MARGUERITA AVE.
RIVERSIDE, CA. 92504

REVISION •

- 04-18-03 2nd PLAN CHECK REVISIONS
- 04-18-03 OWNER REQUESTED REVISIONS
- 06-12-03 3rd PLAN CHECK REVISIONS
- 08-12-03 PROJECT REVISIONS

THIS DRAWING AND THE DESIGNS, ARRANGEMENTS, DEPICTIONS, IDEAS AND OTHER INFORMATION CONTAINED HEREIN CONSTITUTE UNPUBLISHED WORK OF KROH/BROESKE ARCHITECTS AND SHALL REMAIN PROPERTY OF KROH/BROESKE ARCHITECTS IN PERPETUITY. NO PART THEREOF SHALL BE REPRODUCED, COPIED, DISCLOSED, DISTRIBUTED/SOLD, PUBLISHED OR OTHERWISE USED IN ANYWAY WITHOUT THE ADVANCE EXPRESS WRITTEN CONSENT OF KROH/BROESKE ARCHITECTS. VISUAL CONTACT WITH THE ABOVE DRAWINGS, OR ANY PART THEREOF, SHALL CONSTITUTE CONCLUSIVE EVIDENCE OF ACCEPTANCE OF THESE RESTRICTIONS.

SHEET TITLE •

HVAC FLOOR PLAN AND ROOF PLAN

DRAWN	•	A E E
CHECKED	•	W FUNG
SCALE	•	1/8" = 1'-0"
DATE	•	04-07-03
JOB	•	01021
SHEET	•	

M2.1

PERFORMANCE CERTIFICATE OF COMPLIANCE — Part 3 Of 3 — PERF-1

PROJECT NAME: Villegas Gym Expansion | DATE: 12/10/2002

INFORMATION

System Name	Zone Name	Occupancy Type	Floor Area sq. ft.	Inst. LPD W/sq.ft.	Ctrl. Credits W/sq.ft.	Tailored LPD W/sq.ft.	Tailored Vent. W/sq.ft.	Prpc. Loads W/sq.ft.
AC-1	Gym Expansion	GYM	2400	0.000				
AC-2	Gym Expansion	GYM	2400	0.000				

EXCEPTIONAL CONDITIONS COMPLIANCE CHECKLIST

The local enforcement agency should pay special attention to the items specified in this checklist. These items require special written justification and documentation, and special verification to be used with the performance approach. The local enforcement agency determines the adequacy of the justification, and may reject a building or design that otherwise complies based on the adequacy of the special justification and documentation submitted.

	Plan	Field
The zone "Gym Expansion" has a Display Perimeter Credit of 60 ft.		
The zone "Gym Expansion" has a Display Perimeter Credit of 60 ft.		

The exceptional features listed in this performance approach application have specifically been reviewed. Adequate written justification and documentation for their use have been provided by the applicant.

Authorized Signature or Stamp _____

CERTIFICATE OF COMPLIANCE — MECH-1

PROJECT NAME: Villegas Gym Expansion | DATE: 12/10/02

SYSTEM FEATURES

SYSTEM NAME	MECHANICAL SYSTEMS AC-1	AC-2		NOTE TO FIELD Bldg. Dept. Use
TIME CONTROL	S	S		
SETBACK CONTROL	B	B		
ISOLATION ZONES	N	N		
HEAT PUMP THERMOSTAT?	Y	Y		
ELECTRIC HEAT?	N	N		
FAN CONTROL	N	N		
VAV MINIMUM POSITION CONTROL?	N	N		
SIMULTANEOUS HEAT/COOL?	N	N		
HEAT AND COOL SUPPLY RESET?	N	N		
VENTILATION	B	B		
OUTDOOR DAMPER CONTROL?	G	G		
ECONOMIZER TYPE	Fixed Temp (Integrated)	Fixed Temp (Integrated)		
DESIGN O.A. CFM (MECH-3, COLUMN H)	2250	2250		
HEATING EQUIP. TYPE	Heat Pump	Heat Pump		
HEATING EQUIPMENT EFFICIENCY	7.5 HSPF	7.5 HSPF		
MAKE AND MODEL NUMBER	Carrier 50HJQ014	Carrier 50HJQ014		
COOLING EQUIP. TYPE	AIR CONDITIONER	AIR CONDITIONER		
COOLING EQUIPMENT EFFICIENCY	9.8 EER	9.8 EER		
MAKE AND MODEL NUMBER	Carrier 50HJQ014	Carrier 50HJQ014		
PIPE INSULATION PROTECTED?	Y	Y		
PIPE TYPE (SUPPLY, RETURN, ETC.)	N/A	N/A		
HEATING DUCT LOCATION / R-VALUE	ABOVE CLG 4.2	ABOVE CLG 4.2		
COOLING DUCT LOCATION / R-VALUE	ABOVE CLG 4.2	ABOVE CLG 4.2		
VERIFIED SEALED DUCTS IN CEILING/ROOF SPACE	NO	NO		

CODE TABLE: Enter code from table below into columns above.

HEAT PUMP THERMOSTAT?	Y: Yes
ELECTRIC HEAT?	N: No
VAV MINIMUM POSITION CONTROL?	
SIMULTANEOUS HEAT/COOL?	
HEAT AND COOL SUPPLY RESET?	
HIGH EFFICIENCY?	
DUCT TAPE ALLOWED?	
PIPE INSULATION REQUIRED?	

TIME CONTROL	SETBACK CTRL.	ISOLATION ZONES	FAN CONTROL
S: Prog. Switch O: Occupancy Sensor M: Manual Timer	H: Heating C: Cooling B: Both	Enter number of Isolation Zones.	I: Inlet Vanes P: Variable Pitch V: VFD O: Other C: Curve

VENTILATION	OUTDOOR DAMPER	ECONOMIZER	DESIGN O.A. CFM
B: Air Balance C: Outside Air Cert. M: Out. Air Measure D: Demand Control N: Natural	A: Auto G: Gravity	A: Air W: Water N: Not Required	Enter Design Outdoor Air CFM. Note: This shall be no less than Column H on MECH-3.

Nonresidential Compliance Form — January 2001

PERFORMANCE CERTIFICATE OF COMPLIANCE — Part 1 Of 3 — PERF-1

PROJECT NAME: Villegas Gym Expansion | DATE: 12/10/2002

PROJECT ADDRESS: 7240 Marguerita Ave., Riverside | Building Permit #

PRINCIPAL DESIGNER – ENVELOPE: Kroh/Broeske Architects | TELEPHONE: 909-788-5940

DOCUMENTATION AUTHOR: A E Engineering | TELEPHONE: 949-651-9393 | Check by/Date Enforcement Agency use

GENERAL INFORMATION

DATE OF PLANS | BUILDING CONDITIONED FLOOR AREA: 4800 s.f. | CLIMATE ZONE: 10

BUILDING TYPE: [X] NONRESIDENTIAL [ ] HIGH RISE RESIDENTIAL [ ] HOTEL/MOTEL GUEST ROOM

PHASE OF CONSTRUCTION: [X] NEW CONSTRUCTION [ ] ADDITION [ ] ALTERATION [ ] EXISTING + ADDITION

STATEMENT OF COMPLIANCE

This Certificate of compliance lists the building features and performance specifications needed to comply with Title 24, Part 1 and 6 of the State Building Code. This certificate applies to a Building using the performance compliance approach.

DOCUMENTATION AUTHOR	SIGNATURE	DATE
WING FUNG		12/10/2002

The Principal Designer hereby certifies that the proposed building design represented in the construction documents and modelled for this permit application are consistent with the other forms and worksheets, specifications, and other calculations submitted with this permit application. The proposed building as designed meets the energy efficiency requiremtnts of the State Building Code, Title 24, Part 6.

ENV LTC MECH

[X] [ ] [ ] I hereby affirm that I am eligible under the provisions of Division 3 of the Business and Professions Code to sign this document as the person responsible for its preparation; and that I am licensed as a civil engineer, mechanical engineer, electrical engineer or architect.

[ ] [ ] [ ] I affirm that I am eligible under the provisions of Division 3 of the Business and Professions Code by Section 5537.2 of the Business and Professions Code to sign this document as the person responsible for its preparation; and that I am a licensed contractor preparing documents for work that I have contracted to perform.

[ ] [ ] [ ] I affirm that I am eligible under the exemption to Division 3 of the Business and Professions Code by Section ____ of the ____ Code to sign this document as the person responsibpe for its preparation; and for the following reason: _____

ENVELOPE COMPLIANCE

Indicate location on plans of Note Block for mandatory Measures Required Forms: ENV-1

PRINCIPAL ENVELOPE DESIGNER – NAME	SIGNATURE	DATE	LIC. #
Kroh/Broeske Architects			

LIGHTING COMPLIANCE

Indicate location on plans of Note Block for mandatory Measures Required Forms: Lighting compliance not in the scope of this submittal.

PRINCIPAL ENVELOPE DESIGNER – NAME	SIGNATURE	DATE	LIC. #

MECHANICAL COMPLIANCE

Indicate location on plans of Note Block for mandatory Measures Required Forms: Mechanical compliance not in the scope of this submittal.

PRINCIPAL ENVELOPE DESIGNER – NAME	SIGNATURE	DATE	LIC. #
A E Engineering		12/11/02	M-16715

PERFORMANCE CERTIFICATE OF COMPLIANCE — Part 2 Of 3 — PERF-1

PROJECT NAME: Villegas Gym Expansion | DATE: 12/10/2002

ANNUAL SOURCE ENERGY USE SUMMARY (kBtu / sq ft – yr)

ENERGY COMPONENT	Standard Design	Proposed Design	Compliance Margin
Space Heating	7.38	6.38	1.00
Space Cooling	46.25	39.12	7.12
Indoor Fans	27.19	27.75	-0.56
Heat Rejection	0.00	0.00	0.00
Pumps	0.00	0.00	0.00
Domestic Hot Water	0.00	0.00	0.00
Lighting	29.44	29.44	0.00
Receptacle	8.50	8.50	0.00
Process	0.00	0.00	0.00
TOTALS	118.75	111.19	7.56

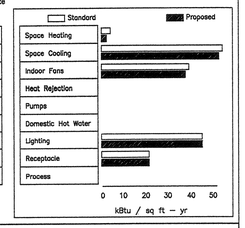

BUILDING COMPLIES

GENERAL INFORMATION

Building Orientation	(North) 0 deg	Conditioned Floor Area	4800 sq ft
Number of Stories	1	Unconditioned Floor Area	0 sq ft
Number of Systems	2	Condotopmed Footprint Area	4800 sq ft
Number of Zones	2		

		Orientation	Gross Area		Glazing Area		Gross Area	
Wall	Front Elevation	(North)	600	sq ft	0	sq ft	0.0%	sq ft
	Left Elevation	(East)	0	sq ft	0	sq ft	0.0%	sq ft
	Rear Elevation	(South)	600	sq ft	0	sq ft	0.0%	sq ft
	Right Elevation	(West)	1800	sq ft	0	sq ft	0.0%	sq ft
			3000	sq ft	0	sq ft	0.0%	sq ft
Roof			4800	sq ft	0	sq ft	0%	sq ft

	Standard		Proposed	
Lighting Power Density	1.000	W/sq ft	0.000	W/sq ft
Prescriptive Env. Heat Loss	647		429	
Prescriptive Env. Heat Gain	71783		33656	

PROJECT ARCHITECT
KROH/BROESKE ARCHITECTS
6180 BROCKTON AVE. SUITE 104
RIVERSIDE, CA. 92506-2228
TEL 909-788-5940
FAX 909-788-1365
E-MAIL: KBA111@AOL.COM

CONSULTANTS
Mechanical Engineering
Advanced Environmental Engineering
4056 Willowew Drive
Irvine, CA. 92620
PH. 949.651.9393
FAX 949.651.9393

LICENSED ARCHITECT JAMES L. BROESKE No. C009174 Ren. 11-30-2003 STATE OF CALIFORNIA

PROJECT

VILLEGAS GYM EXPANSION

7240 MARGUERITA AVE. RIVERSIDE, CA. 92504

REVISION
- 04-18-03 2nd PLAN CHECK REVISIONS
- 04-18-03 OWNER REQUESTED REVISIONS
- 06-12-03 3rd PLAN CHECK REVISIONS
- 08-12-03 PROJECT REVISIONS

THIS DRAWING AND THE DESIGNS, ARRANGEMENTS, DEPICTIONS, IDEAS AND OTHER INFORMATION CONTAINED HEREIN CONSTITUTE UNPUBLISHED WORK OF KROH/BROESKE ARCHITECTS AND SHALL REMAIN PROPERTY OF KROH/ BROESKE ARCHITECTS IN PERPETUITY. NO PART THEREOF SHALL BE REPRODUCED, COPIED, DISCLOSED, DISTRIBUTED,SOLD, PUBLISHED OR OTHERWISE USED IN ANYWAY WITHOUT THE ADVANCE EXPRESS WRITTEN CONSENT OF KROH/BROESKE ARCHITECTS. VISUAL CONTACT WITH THE ABOVE DRAWINGS, OR ANY PART THEREOF, SHALL CONSTITUTE CONCLUSIVE EVIDENCE OF ACCEPTANCE OF THESE RESTRICTIONS.

SHEET TITLE

CERTIFICATE OF COMPLIANCE

DRAWN	AEE
CHECKED	W FUNG
SCALE	NONE
DATE	04-07-03
JOB	0102I
SHEET	

M5.1

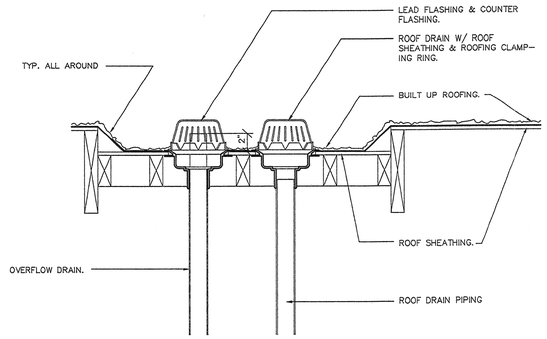

ROOF DRAIN AND OVERFLOW DETAIL

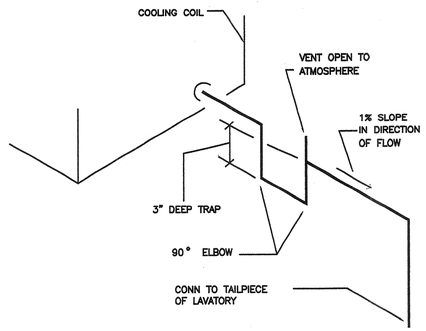

CONDENSATE DRAIN DETAIL

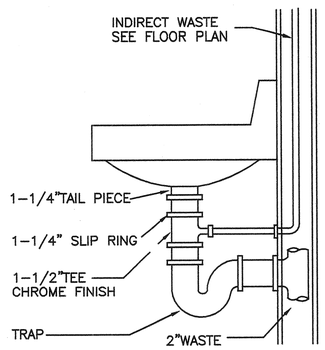

CONDENSATE DRAIN TO LAVATORY

PLUMBING MATERIAL SCHEDULE

SERVICE		COPPER, TYPE 'K'	COPPER, TYPE 'L'	SCHED. 40 BLACK STEEL	SCHED. 40 GALV. STEEL	C.I. SOIL PIPE & FITTINGS, S.W.	VITRIFIED CLAY	COOPER TYPE 'M'	ABS PLASTIC	REMARK
WATER	INSIDE									
	OUTSIDE									
SANITARY SEWER	INSIDE									
	OUTSIDE									
SANITARY VENT	INSIDE									
	OUTSIDE									
GAS	INSIDE									
	OUTSIDE									
STORM DRAINAGE	INSIDE					●				
	OUTSIDE					●				
CONDENSATE DRAIN	INSIDE						●			W/ 1" THICK RIGID INSULATION
	OUTSIDE						●			

PLUMBING FIXTURE SCHEDULE

SYMBOL	DESCRIPTION	CW	HW	W	V	TRAP	REMARKS
RD / 1	ROOF DRAIN						J R SMITH 1010
OD / 1	OVERFLOW DRAIN						J R SMITH 1070
SH / 1	SHOWER	1/2"	1/2"	2"	1-1/2"	2"	LEONARD AQUATROL 4505, 4500 PRESSURE ACTUATED SHOWER VALVE, D-2L INLINE DIVERTER W/ LEVER HANDLE, H-05 HEAD, ARM, & FLANGE, 501-P(C) HAND SHOWER, 24" GLIDE BAR, AND INLINE VACUUM BREAKER

2

PLUMBING NOTES

1. VERIFICATION: BEFORE COMMENCEMENT OF WORK, THIS CONTRACTOR SHALL VERIFY THE EXACT LOCATIONS, ELEVATIONS, AND CHARACTERISTICS OF ALL UTILITIES AND PIPING INCLUDING ALL EXISTING PLUMBING SYSTEMS AND SHALL IMMEDIATELY NOTIFY THE ARCHITECT OF ANY DISCREPANCIES.
2. COORDINATION OF REQUIREMENTS: BEFORE FABRICATION OR INSTALLATION, THIS CONTRACTOR SHALL VERIFY EXACT LOCATIONS OF ALL MECHANICAL EQUIPMENT AND OTHER EQUIPMENT PROVIDED UNDER ANOTHER SECTION OF SPEC. OR BY THE OWNER. THE EXACT ROUGH-IN LOCATIONS AND REQUIREMENTS SHALL BE COORDINATED IN FIELD.
3. INTERFERENCE WITH EQUIPMENT: ALL PLUMBING WORK SHALL BE INSTALLED SO AS TO AVOID INTERFERENCE WITH ELECTRICAL AND MECHANICAL EQUIPMENT AND STRUCTURAL MEMBERS.
4. CUTTING: ALL CUTTING OF EXISTING PAVING, WALKS AND/OR FLOORS SHALL BE MACHINE SAW CUTTING. HOLES FOR PIPES IN CONCRETE WALLS OR FLOORS SHALL BE DONE USING CORE DRILLING EQUIPMENT.
5. PATCHING AND REPAIRS: THIS CONTRACTOR SHALL BE RESPONSIBLE FOR PATCHING AND REPAIRING ALL AREAS WHICH ARE EXCAVATED AND/OR DAMAGED BY HIS WORKS. IN ADDITION, THIS CONTRACTOR SHALL RESTORE THOSE AREAS TO THEIR ORIGINAL CONDITION INCLUDING THE PLANTED AREAS.
6. INDIRECT WASTE PIPES: ALL INDIRECT WASTE PIPING ON ROOF SHALL BE TYPE "M" COPPER SECURED TO PIPE PIER BY ERICO WITH PIPE CLAMPS PIPING SHALL BE SLOPPED TO AND TERMINATED AT AN APPROVED RECEPTOR.

PLUMBING LEGEND

SYMBOL	ABBRE.	DESCRIPTION
	S OR W	SOIL OR WASTE ABOVE FLOOR
	S OR W	SOIL OR WASTE BELOW FLOOR
SD	SD	STORM DRAIN ABOVE FLOOR
SD	SD	STORM DRAIN BELOW FLOOR
OF	OF	OVERFLOW DRAIN ABOVE FLOOR
OF	OF	OVERFLOW DRAIN BELOW FLOOR
	V	VENT
	CW	COLD WATER
	HW	HOT WATER
	HWR	HOT WATER RETURN
G	G	GAS
	FCO/COTG	FLOOR CLEANOUT/CLEANOUT TO GRADE
	COYB	CLEANOUT IN YARD BOX
	WCO	WALL CLEANOUT
	SOV	SHUT OFF VALVE
	BC	BALANCING COCK
	GC	GAS COCK
	P/T RV	PRESSURE/TEMPERATURE RELIEF VALVE
	U	UNION
	HB	HOSS BIBB
	WHA	WATER HAMMER ARRESTOR
CD	CO	CONDENSATE DRAIN

ABBRE.	DESCRIPTION	ABBRE.	DESCRIPTION
ABV	ABOVE	I.E.	INVERT ELEVATION
A/C	AIR CONDITIONING	INV.	INVERT
A.P.	ACCESS PANEL	LAT'L	LATERAL
BEL.	BELOW	M.H.	MANHOLE
BR.	BRANCH	N.I.C.	NOT IN CONTACT
CLG.	CEILING	O.F.D.	OVERFLOW DRAIN
CFH	CUBIC FEET PER HOUR	P.O.C.	POINT OF CONNECTION
&	--DITTO--	PRESS.	PRESSURE
CONN.	CONNECT(ION)	P.R.V.	PRESSUR REDUCE VALVE
CONT.	CONTINUE(ATION)	REQ'D	REQUIRED
DET.	DETAIL	RECOV	RECOVERY
DN.	DOWN	R.I. & C.	ROUGH-IN & CONNECT
D.S.	DOWNSPOUT	SHT	SHEET
EA.	EACH	TEMP.	TEMPERATURE
EXIST.	EXISTING	TERM.	TERMINATE
FIN.	FINISH(ED)	TYP.	TYPICAL
FLR.	FLOOR	VTR.	VENT THRU. ROOF
GR.	GRADE / GROUND	W/	WITH
GHP	GALLONS PER HOUR	@	AT
GPM	GALLONS PER MINUTE		
HDR.	HEADER		
HTR.	HEATER		

PROJECT ARCHITECT •
KROH/BROESKE
ARCHITECTS
6180 BROCKTON AVE. SUITE 104
RIVERSIDE, CA. 92506-2228
TEL 909-788-5940
FAX 909-788-1365
E-MAIL: KBA111@AOL.COM

CONSULTANTS •
Mechanical Engineering
Advanced Environmental Engineering
4056 Willowx Drive
Irvine, CA 92620
PH. 949.651.9393
FAX 949.651.9393

PROJECT •

LICENSED ARCHITECT JAMES L. BROESKE No. C009174 Ren. 11-30-2003 STATE OF CALIFORNIA

VILLEGAS GYM EXPANSION

7240 MARGUERITA AVE. RIVERSIDE, CA. 92504

REVISION •
- 04-18-03 2nd PLAN CHECK REVISIONS
- 04-18-03 OWNER REQUESTED REVISIONS
- 06-12-03 3rd PLAN CHECK REVISIONS
- 08-12-03 PROJECT REVISIONS

THIS DRAWING AND THE DESIGNS, ARRANGEMENTS, DEPICTIONS, IDEAS AND OTHER INFORMATION CONTAINED HEREIN CONSTITUTE UNPUBLISHED WORK OF KROH/BROESKE ARCHITECTS AND SHALL REMAIN PROPERTY OF KROH BROESKE ARCHITECTS IN PERPETUITY. NO PART THEREOF SHALL BE REPRODUCED, COPIED, DISCLOSED, DISTRIBUTED,SOLD, PUBLISHED OR OTHERWISE USED IN ANYWAY WITHOUT THE ADVANCE EXPRESS WRITTEN CONSENT OF KROH/BROESKE ARCHITECTS. VISUAL CONTACT WITH THIS ABOVE DRAWINGS, OR ANY PART THEREOF, SHALL CONSTITUTE CONCLUSIVE EVIDENCE OF ACCEPTANCE OF THESE RESTRICTIONS.

SHEET TITLE •

PLUMBING NOTES AND DETAILS

DRAWN	•	A E E
CHECKED	•	W FUNG
SCALE	•	NONE
DATE	•	04-07-03
JOB	•	01021
SHEET	•	

P0.1

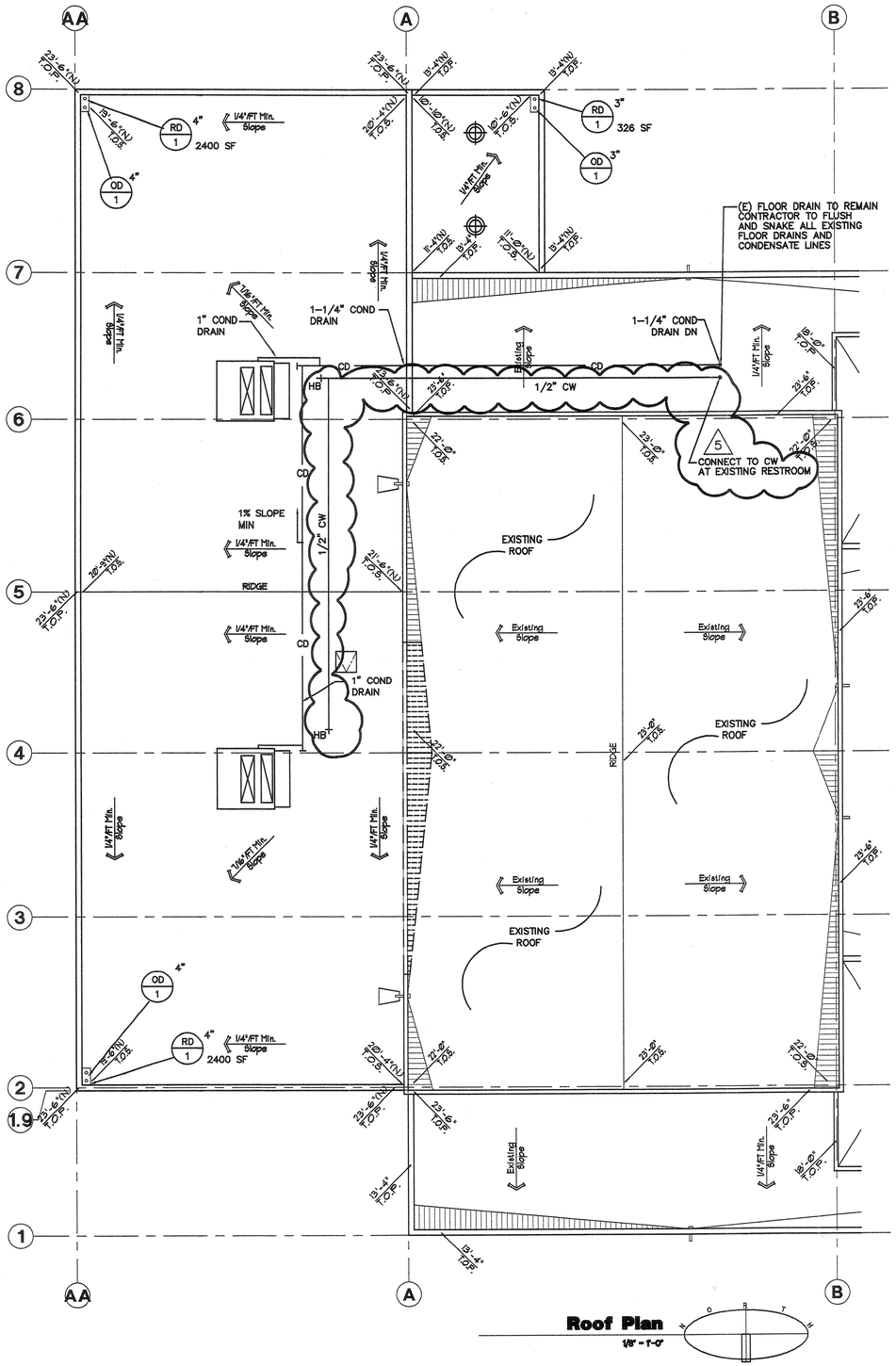

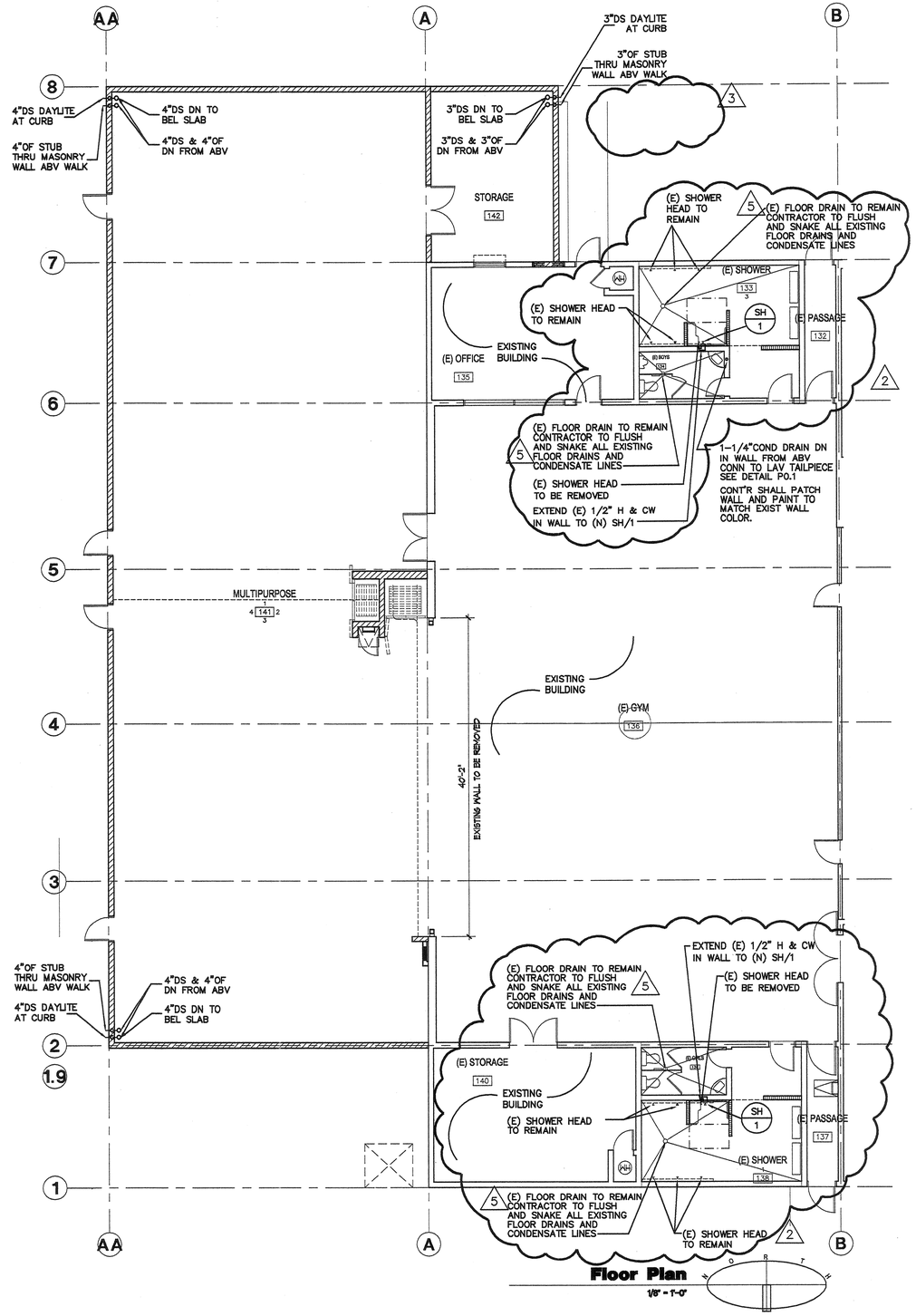

PROJECT ARCHITECT
KROH/BROESKE
ARCHITECTS
9180 BROCKTON AVE. SUITE 104
RIVERSIDE, CA. 92506-2228
TEL 909-788-5940
FAX 909-788-1365
E-MAIL: KBA111@AOL.COM

CONSULTANTS
Mechanical Engineering
Advanced Environmental Engineering
4056 Williwaw Drive
Irvine, CA. 92620
PH. 949.651.9393
FAX 949.651.9393

PROJECT

LICENSED ARCHITECT
JAMES L. BROESKE
No. C009174
Ren. 11-30-2003
STATE OF CALIFORNIA

VILLEGAS GYM EXPANSION

7240 MARGUERITA AVE.
RIVERSIDE, CA. 92504

REVISION
- 04-18-03 2nd PLAN CHECK REVISIONS
- 04-18-03 OWNER REQUESTED REVISIONS
- 06-12-03 3rd PLAN CHECK REVISIONS
- 08-12-03 PROJECT REVISIONS

THIS DRAWING AND THE DESIGNS, ARRANGEMENTS, DEPICTIONS, IDEAS AND DIMENSIONS INDICATED THEREON, WHICH CONSTITUTE THE EXCLUSIVE WORK OF KROH/BROESKE ARCHITECTS AND SHALL REMAIN PROPERTY OF KROH/BROESKE ARCHITECTS IN PERPETUITY. NO PART THEREOF SHALL BE REPRO-DUCED, COPIED, DISCLOSED, DISTRIBUTED,SOLD, PUBLISHED OR OTHERWISE USED IN ANYWAY WITHOUT THE ADVANCE EXPRESS WRITTEN CONSENT OF KROH/BROESKE ARCHITECTS. VISUAL CONTACT WITH THE ABOVE DRAWINGS, OR ANY PART THEREOF, SHALL CONSTITUTE CONCLUSIVE EVIDENCE OF AC-CEPTANCE OF THESE RESTRICTIONS.

SHEET TITLE

PLUMBING FLOOR PLAN AND ROOF PLAN

DRAWN	•	A E E
CHECKED	•	W FUNG
SCALE	•	1/8" = 1'-0"
DATE	•	04-07-03
JOB	•	01021
SHEET	•	

P2.1

DRAWING NUMBER
PLAN HOLD CORPORATION • IRVINE, CALIFORNIA
REORDER BY NUMBER 075AR
DRAWING NUMBER
PLAN HOLD CORPORATION • IRVINE, CALIFORNIA
REORDER BY NUMBER 075AR

DRAWING NUMBER
PLAN HOLD CORPORATION • IRVINE, CALIFORNIA
REORDER BY NUMBER 075AR

DRAWING NUMBER
PLAN HOLD CORPORATION • IRVINE, CALIFORNIA
REORDER BY NUMBER 075AR
DRAWING NUMBER
V1-148
PLAN HOLD CORPORATION • IRVINE, CALIFORNIA
REORDER BY NUMBER 075AR

DRAWING NUMBER
PLAN HOLD CORPORATION • IRVINE, CALIFORNIA
REORDER BY NUMBER 075AR

CERTIFICATE OF COMPLIANCE (Part 1 of 3) LTG-1

PROJECT NAME: Villegas Gym Expsnsion — DATE: 12-12-02
PROJECT ADDRESS: 7240 Marguerita Avenue, Riverside, CA
PRINCIPAL DESIGNER-LIGHTING: Consolidated Engineering — TELEPHONE: (714) 832-6346 — Building Permit
DOCUMENTATION AUTHOR: Kroh/Broeske Architects — TELEPHONE: (909) 788-5940 — Checked by/Date Enforcement Agency Use

GENERAL INFORMATION

DATE OF PLANS 12-12-02 — BUILDING CONDITIONED FLOOR AREA 4800 s.f. — CLIMATE ZONE
BUILDING TYPE: ☒ NONRESIDENTIAL ☐ HIGH RISE RESIDENTIAL ☐ HOTEL/MOTEL GUEST ROOM
PHASE OF CONSTRUCTION: ☐ NEW CONTRUCTION ☒ ADDITION ☐ ALTERATION ☐ UNCONDITIONED (file affidavit)
METHOD OF LIGHTING COMPLIANCE: ☐ COMPLETE BLDG. ☒ AREA CATEGORY ☐ TAILORED ☐ PERFORMANCE

STATEMENT OF COMPLIANCE

This Certificate of Compliance lists the building features and performance specifications need to comply with Title 24, Parts 1 and 6 of the California Code of Regulations. This certificate applies only to building lighting requirements.

The documentation preparer hereby certifies that the documentation is accurate and complete.

DOCUMENTATION AUTHOR: David Lo — SIGNATURE — DATE: 12-12-02

The Principal Lighting Designer hereby certifies that the proposed building design represented in this set of construction documents is consistent with the other compliance forms and worksheets, with the specifications, and with any other calculations submitted with this permit application. The proposed building has been designed to meet the lighting requirements contained in the applicable parts of Sections 110, 119, 130 through 132, 146, and 149 of Title 24, Part 6.

Please check one:

☒ I hereby affirm that I am eligible under the provisions of Division 3 of the Business and Professions Code to sign this document as the person responsible for its preparation; and that I am licensed in the State of California as a civil engineer or electrical engineer, or I am a licensed architect.

☐ I affirm that I am eligible under the provisions of Division 3 of the Business and Professions Code by section 5537.2 or 6737.3 to sign this document as the person responsible for its preparation; and that I am a licensed contractor performing this work.

☐ I affirm that I am eligible under the provisions of Division 3 of the Business and Professions Code to sign this document because it pertains to a structure or type of work described as exempt pursuant to Business and Professions Code Sections 5537, 5538 and 6737.1.

(These sections of the Business and Professions Code are printed in full in the Nonresidential Manual.)

PRINCIPAL ENVELOPE DESIGNER-NAME: David I. Lo — SIGNATURE — DATE: 12-12-02 — LIC#: E-8625

LIGHTING MANDATORY MEASURES

Indicate location on plans of Note Block for Mandatory Measure. E-1

INSTRUCTIONS TO APPLICANT

For detailed instructions on the use of this and all Energy Efficiency Standards compliance forms, please refer to the Nonresidential Manual published by the california Energy Commision.
LTG-1: Required on plans for all submittals. Part 2 and 3 may be incorporated in schedules on plans.
LTG-2: Required for all submittals.
LTG-3: Optional. Uses only if lighting control credits are taken.
LTG-4: Optional. Part 2 and 3 and LTG-5 are optional if Tailored Method if used.

CERTIFICATE OF COMPLIANCE (Part 2 of 3) LTG-1

PROJECT NAME: Villegas Gym Expansion — DATE: 12-12-02

INSTALLED LIGHTING SCHEDULE

Name	LUMINAIRE DESCRIPTION	LAMPS Type DESCRIPTION	No. of Lamps	Watts Per Lamp	BALLAST Type DESCRIPTION	No. of Ballast	Luminaire No. of Lumin.	Watts/ Lumin.	TOTAL WATTS
A	Low Bay Dnlt	HID	1	400	ELECTR	1	16	450	7200

Lighting Schedule on Plans Shows Exterior Lighting Meets
☐ Efficacy and Control Requirement of § 130(c)
☐ Control Requirements of § 131(f)

SUBTOTAL FROM THIS PAGE	7,200
PLUS SUBTOTAL FROM CONTINUATION PAGE	—
PORTABLE LIGHTING (From LTG-1 Part 3 of 3)	
LESS CONTROL CREDIT WATTS (From LTG-3)	
ADJUSTED ACTUAL WATTS	7,200

MANDATORY AUTOMATIC CONTROLS

CONTROL LOCATION (Room #)	CONTROL IDENTIFICATION	CONTROL TYPE (Auto Time Switch, Exterior, etc.)	SPACE CONTROLLED	NOTE TO FIELD
			OFFICES	

CONTROLS FOR CREDIT

CONTROL LOCATION (Room # or Dwg #)	CONTROL IDENTIFICATION	CONTROL TYPE (Occupant, Daylight, Dimming, etc.)	LUMINAIRES CONTROLLED TYPE	# OF LUMINAIRES	NOTE TO FIELD

NOTES TO FIELD - For Building Department Use Only

LIGHTING COMPLIANCE SUMMARY LTG-2

PROJECT NAME: Villegas Gym Expsnsion — DATE: 12-12-02

ACTUAL LIGHTING POWER

LUMINAIRE NAME	Type DESCRIPTION	NUMBER OF LUMINAIRES	WATTS PER LUMINAIRE (Including Ballast)	CEC DEFAULT? Y	N	TOTAL WATTS
A	LOW BAY HID	16	450	☒	☐	7200

SUBTOTAL FROM THIS PAGE	7200
PLUS SUBTOTAL FROM CONTINUATION PAGE	—
PORTABLE LIGHTING (From LTG-1 Part 3 of 3)	—
LESS CONTROL CREDIT WATTS (From LTG-3)	—
ADJUSTED ACTUAL WATTS	8,000

ALLOWED LIGHTING POWER (Choose One Method)

COMPLETE BUILDING METHOD

BUILDING CATEGORY (Form § 146(b) Table 1-M)	WATTS PER SF	COMPLETE BLDG. AREA	ALLOWED WATTS

AREA CATEGORY METHOD

AREA CATEGORY (Form § 146(b) Table 1-N)	WATTS PER SF	AREA (SF)	ALLOWED WATTS
Multipurpose Room	1.5	4,800	7,200
TOTALS		4,800 AREA	7,200 WATTS

TAILORED METHOD

TOTAL ALLOWED WATTS (From LTG-4)

LIGHTING FIXTURE SCHEDULE

TYPE	FIXTURE INCAND.	FLUOR.	H.I.D.		VOLTS	LAMPS NO.	WATTS AND TYPE	MOUNTING REC.	CLG.	WALL	DESCRIPTION & VARIATIONS	MANUFACTURER & CATALOG NUMBER
A / 500			•		120	1	400W MH		•		HID LUMINAIRE WITH ACRYLIC REFRACTOR —	HUBBELL #BL-400H-8-LB1-WH
B / 20					120		LED			•	LED TYPE EXIT LIGHT FIXTURE WITH EMERGENCY BATTERY AND VANDAL RESISTANT SHIELD	PRESCOLITE #XT-3-R-EN-DL-WH-VRSP3
C / 20					120		7.2W SEALED BEAM			•	TWIN HEAD EMERGENCY LIGHT FIXTURE COMPLETE WITH WALL MOUNTING BRACKET & VANDAL RESISTANT SHIELD	PRESCOLITE #EDS4-CVS-VRSB
D / 100			•		120	1	100W MH			•	WALL MOUNTED HID LUMINAIRE — —	DEVINE LIGHTING #BC018-100MH-120 FINISH BY ARCHITECT
E / 64		•			120		32W F32T8				4-FT FLUORESCENT WRAPROUND FIXTURE WITH PRISMATIC POLYCARBONATE DIFFUSER, VANDAL RESISTANT PENDANT MOUNTED	HUBBELL #VL232-B (3)

LIGHTING FIXTURE NOTES

1. THIS CONTRACTOR SHALL VERIFY THE TYPE OF CEILING BEFORE ORDERING ANY NEW FIXTURES. HE IS FULLY RESPONSIBLE TO PROVIDE ALL MOUNTING BRACKETS TO FIT THE CEILING CONDITIONS AT NO EXTRA CHARGE TO THE OWNER.
2. REFER TO ARCHITECTURAL REFLECTED CEILING PLAN FOR EXACT LOCATION OF LIGHTING FIXTURES.
3. CONTRACTOR SHALL BE RESPONSIBLE FOR ORDERING PROPER TYPES OF TRIMS ALL RECESSED FLUORESCENT FIXTURES TO FIT THE CEILING BEING INSTALLED.
4. ALL NEW FLUORESCENT LAMPS SHALL BE ENERGY SAVING TYPE, COOL WHITE EQUAL TO G.E. – "WATTMISER 2", OR SYLVANIA – "SUPER SAVER" LAMPS.
5. ALL BALLASTS SHALL BE HIGH FREQUENCY ELECTRONIC TYPE SUITABLE FOR LAMPS SPECIFIED. 97% BALLAST FACTOR MINIMUM AND TRANSIENT HARMONIC DISTORTION OF LESS THAN 10 PERCENT.
6. ALL LUMINAIRES/BALLASTS SHALL BE CERTIFIED BY THE CALIF. ENERGY COMMISSION.
7. FIXTURE TYPE IN CONTACT WITH INSULATION SHALL BE U.L. APPROVED FOR THERMAL BARRIER.
8. SUBMIT LIGHTING FIXTURE CUTS FOR OWNER/ARCHITECT OR ENGINEER'S APPROVAL.

PANEL — PANEL "C"

MAIN: L.O. — BUSS: 225A — SERVICE: 208/120V, 3ø, 4W — MOUNTING: FLUSH — A. I. C.: —

DESCRIPTION	VOLT AMPS A	B	C	LTG	REC	MIC	BKR POLE	AMP	CKT NO.	A B C	CKT NO.	BKR POLE	AMP	LTG	REC	MIC	VOLT AMPS A	B	C	DESCRIPTION
MULT-PURPOSE LTG	1500			3			1	20	1		2	1	20		4		720			MULT-PURP RECEP
MULT-PURPOSE LTG		1500		3			1	20	3		4	1	20		4			720		MULT-PURP/STORG RECEP
MULT-PURPOSE LTG			1000	2			1	20	5		6	1	20		2				360	ROOF RECEP
MULT-PURPOSE LTG	1000			2			1	20	7		8	1	20			2	200			SMOKE DETECTORS
MULT-PURPOSE LTG		1500		3			1	20	9		10	1	20					—		SPARE
MULT-PURPOSE LTG			1500	3			1	20	11		12	1	20						—	SPARE
EMERG & EXIT LTS	140			7			1	20	13		14	1	20				—			SPARE
* EXTERIOR LIGHTS		1200		6			1	20	15		16	1	20					—		SPARE
LIGHTING CONTROL			200				1	20	17		18	1	20						—	SPARE
STORAGE ROOM LTS	192			3			1	20	19		20	1	—				—			SPACE
SPACE		—					1	—	21		22	1	—					—		SPACE
SPACE			—				1	—	23		24	1	—						—	SPACE
SPACE	—						1	—	25		26	1	—				—			SPACE
SPACE		—					1	—	27		28	1	—					—		SPACE
SPACE			—				1	—	29		30	1	—						—	SPACE
SPACE	—						1	—	31		32	1	—				—			SPACE
SPACE		—					1	—	33		34	1	—					—		SPACE
SPACE			—				1	—	35		36	1	—						—	SPACE
HP-1 ON ROOF	7806					1		90	37		38		90			1	7806			HP-2 ON ROOF
----		7806							39		40							7806		----
----			7806				3		41		42	3							7806	----
TOTALS:																				

33,150 WATTS X 1.25 (L.C.L. & LARGEST MOTOR) = 41,438 WATTS
OTHER LOAD = 25,418 WATTS
TOTAL (5) = 66,856 WATTS — TOTAL AMPS 186

* PROVIDE TIME SWITCH "PARAGON SUNTRACKER EC74ST" AND LIGHTING CONTACTOR, SQUARE D CLASS 8903 TYPE LG20, TO CONTROL EXTERIOR LIGHTING CIRCUIT C-15. MOUNT TIME SWITCH AND LIGHTING CONTACTOR IN TOP OF PANEL "C" IN SEPARATE BARRIERED COMPARTMENT WITH DOOR LOCK KEYED TO MATCH PANEL. CONNECT TIME SWITCH AND LIGHTING CONTACTOR CONTROL CIRCUITS TO C-17.

ELECTRICAL GENERAL NOTES

1. ALL WORK SHALL BE IN FULL ACCORDANCE WITH ALL CODES, RULES AND REGULATIOINS OF GOVERNING AGENCIES AND SHALL COMPLY WITH THE REQUIREMENTS OF THE SERVING POWER AND TELEPHONE COMPANIES.
2. THE CONTRACTOR SHALL OBTAIN AND PAY FOR ALL PERMITS AND COMPLY WITH ALL INSPECTION REQUIREMENTS.
3. THE CONTRACTOR SHALL VERIFY AVAILABILITY OF SERVICES AND DETERMINE ACTUAL DETAILS PERTAINING TO EXACT LOCATIONS AND REQUIREMENTS BEFORE SUBMITTING HIS BID. UPON RECEIPT OF NOTICE THAT THE ELECTRICAL CONTRACT AWARD HAS BEEN MADE, SUCCESFUL BIDDER SHALL NOTIFY THE POWER AND TELEPHONE COMPANIES OF THE ESTIMATED DATE WHEN SERVICE SHALL BE DESIRED.
4. ALL MATERIALS SHALL BE NEW, UL LISTED AND APPROVED AS APPROPRIATE.
5. ELECTRICAL DRAWINGS ARE DIAGRAMMATIC. REFER TO ARCHITECTURAL, STRUCTURAL, MECHANICAL AND HVAC DRAWINGS FOR GUIDANCE ON DIMENSIONS, CEILING HEIGHTS, DOOR SWINGS, ROOM FINISHES, DETAILS, LOCATION OF DUCTS, PIPES AND STEEL. INSTALL THE ELECTRICAL SYSTEMS WITHOUT INTERFERING WITH DUCTS, PIPES, STRUCTURAL STEEL OR OTHER SYSTEMS.
7. ALL ELECTRICAL DEVICES, EQUIPMENT, CONDUITS, CONNECTORS ETC. LOCATED OUTSIDE OF BUILDING ENVELOPE SHALL BE WEATHERPROOFED.
8. ALL CONDUCTORS SHALL BE COPPER WITH TYPE THHN/THWN 600 VOLT INSULATION. MINIMUM SIZE OF WIRE SHALL BE NO. 12 AWG, UNLESS NOTED OTHERWISE.
9. GALVANIZED RIGID CONDUIT OR INTERMEDIATE METAL CONDUIT SHALL BE USED. ELECTRICAL METALLIC TUBING MAY BE USED IN INDOOR DRY LOCATIONS. LOCATIONS. FLEXIBLE CONDUIT SHALL BE USED FOR FINAL CONNECTIONS TO MOTORS AND OTHER VIBRATTING EQUIPMENT.
12. RECEPTACLES SHALL BE DUPLEX TYPE, 20 AMP, 125V, 3 WIRE, GROUNDING TYPE, NEMA CONFIGURATION 5-20R.
14. PROVIDE WALL PLATES FOR FLUSH MOUNTED RECEPTACLES, SPECIFICATION GRADE, SATIN ALUMINUM, STANDARD SIZE. COVER PLATES FOR DEVICES IN TYPE FS AND FD BOXES FOR EXPOSED WORK, SHALL BE SHEET STEEL, SUITABLE FOR THE DEVICES INSTALLED. GANG TYPE COVERS SHALL BE USED WHERE MORE THAN ONE DEVICE IS MOUNTED IN A BOX.
18. TEST THE COMPLETE SYSTEM TO DEMONSTRATE THAT THE ELECTRICAL COMPONENTS AND SYSTEMS ARE COMPLETE, INSTALLED AND FUNCTION PROPERLY. MAKE NECESSARY CORRECTIONS TO MALFUNCTION AND LEAVE SYSTEM READY FOR OPERATION.
19. ALL WORK SHALL BE GUARANTEED BY THE CONTRACTOR FOR A PERIOD OF ONE YEAR FROM THE DATE OF ACCEPTANCE OF THE WORK BY THE OWNER.
20. CONDUCTOR PENETRATION OF FIRE RATED PORTIONS OF A STRUCTURE SHALL BE EFFECTIVELY SEALED AND SLEEVED WITH STEEL FLEX 3 FEET EACH SIDE OF THE PENETRATION, OR OTHER APPLIED METHODS PER N.E.C. 300-21.
21. FIRE STOPPING (PENETRATION SEALING) IS REQUIRED FOR EACH PENETRATION THROUGH A FIRE RATED WALL. PER U.B.C.-709.6/N.E.C. 300.21.

ELECTRICAL SYMBOL LIST

Symbol	Description
	FLUORESCENT LIGHTING FIXTURE SURFACE OR PENDANT MOUNTED
	FLUORESCENT STRIP LIGHTING FIXTURE
	INCANDESCENT OR H.I.D. LIGHTING FIXTURE RECESSED MOUNTED
	EXIT SIGN LIGHTING FIXTURE, DIRECTIONAL ARROW AS SHOWN
	DUPLEX RECEPTACLE @ +15" OR AS NOTED. GROUNDING TYPE
	GFI TYPE DUPLEX RECEPTACLE MOUNTED AS SHOWN ON PLAN
J	JUNCTION BOX
	EXHAUST FAN
$	TOGGLE SWITCH, SINGLE POLE, FLUSH MOUNTED @ 4'-0" OR AS NOTED
$M	MANUAL MOTOR STARTER SWITCH WITH THERMAL OVERLOAD PROTECTION, 1 OR 2 POLE AS REQUIRED, MOUNTED @ 4'-0" OR AS NOTED
	LIGHTING OR RECEPTACLE PANELBOARD @ +6'-6" TO TOP
A / 115	FIXTURE DESIGNATION, "A" = FIXTURE TYPE, 115 = TOTAL WATTS
	CONDUIT RUN CONCEALED ABOVE CEILING OR IN WALL
	FLEXIBLE CONDUIT
	HOMERUN TO PANEL "P" CIRCUITS #1 & #3 WITH WIRES AS NOTED
2	PLAN NOTE #2
E	EQUIPMENT WITH "E" ADJACENT IS EXISTING TO REMAIN
D	EQUIPMENT WITH "R" ADJACENT IS EXISTING TO BE COMPLETELY DISCONNECTED AND REMOVED.
— E —	EXISTING CONDUIT RUN TO REMAIN. EXISTING CONDUCTORS TO REMAIN UNLESS NOTED OTHERWISE.
— D —	EXISTING CONDUIT AND WIRE RUN TO BE COMPLETELY DISCONNECTED AND REMOVED BACK TO LAST REMAINING OUTLET OR DEVICE.
(E)	EXISTING
(N)	NEW

ELECTRICAL WIRING LEGEND

1/2"C – 2#12	1/2"C – 3#12	3/4"C – 4#12
3/4"C – 5#12	1"C – 6#12	1"C – 7#12
#10 1/2"C – 2#10	#10 3/4"C – 3#10	#10 3/4"C – 4#10
#10 1"C – 5#10	#8 3/4"C – 2#8	#8 1"C – 3#8

ISOLATED GROUND WIRE. RUN IN ADDITION TO REGULAR GROUND WIRE.

NOTE:

IN ADDITION TO PHASE AND NEUTRAL WIRES SHOWN ABOVE, ONE GROUND WIRE SHALL BE ADDED IN EACH CONDUIT RUN. GROUND WIRE SHALL BE SIZED PER N.E.C. TABLE 250-95, BUT NOT SMALLER THAN #12.

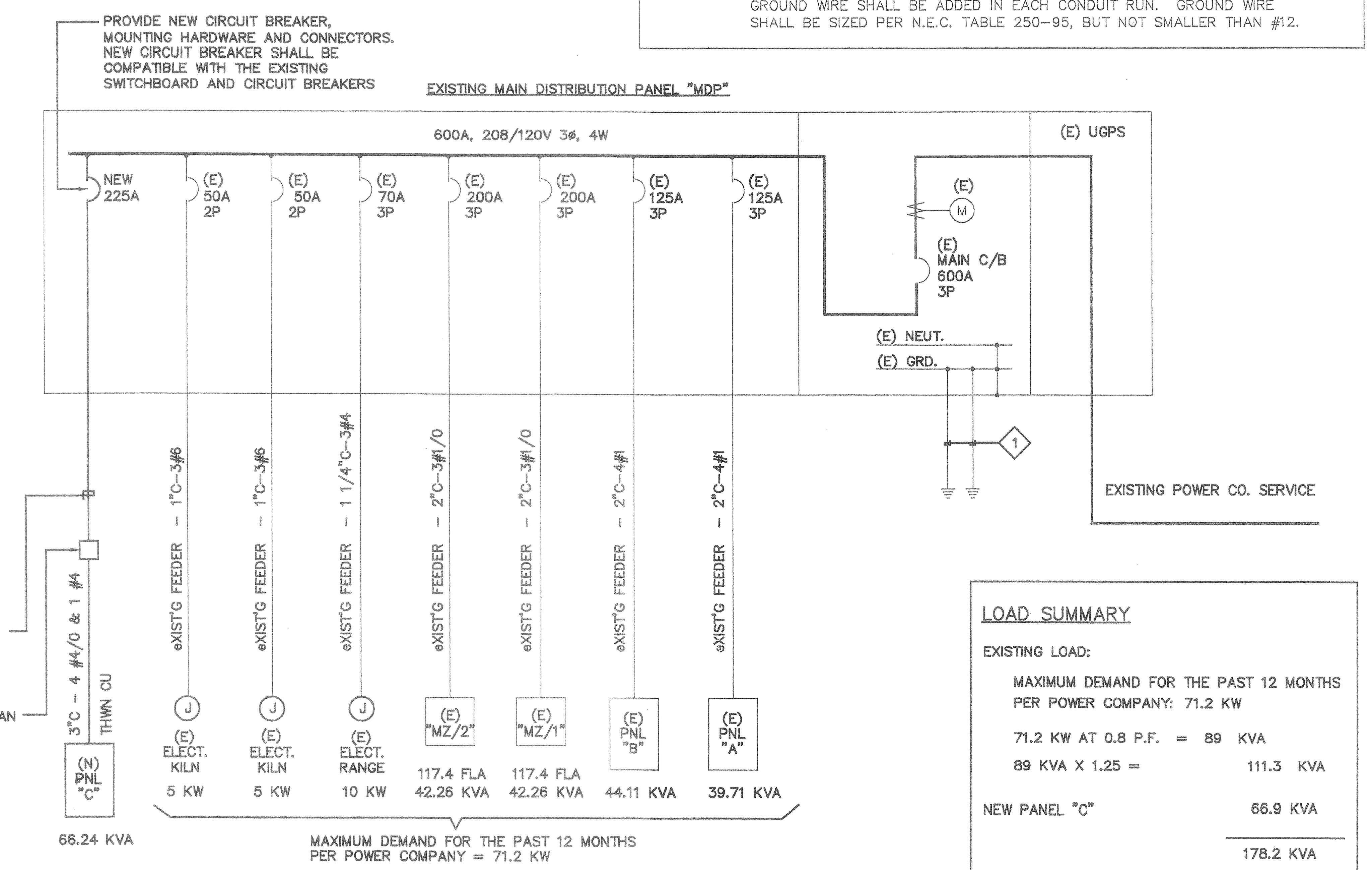

SINGLE LINE DIAGRAM
NOT TO SCALE

LOAD SUMMARY

EXISTING LOAD:

MAXIMUM DEMAND FOR THE PAST 12 MONTHS PER POWER COMPANY: 71.2 KW

71.2 KW AT 0.8 P.F. = 89 KVA
89 KVA X 1.25 = 111.3 KVA

NEW PANEL "C" 66.9 KVA

178.2 KVA
@ 208/120V, 3ø, 4W = 495 AMPS.

PROJECT ARCHITECT
KROH/BROESKE ARCHITECTS
8180 BROCKTON AVE. SUITE 104
RIVERSIDE, CA. 92506-2228
TEL 909-788-5940
FAX 909-788-1365
E-MAIL: KBA111@AOL.COM

CONSULTANTS
Electrical Engineering
Consolidated Engineering
14661 Myford Road, Suite C
Tustin, CA 92780
PH. 714. 832-6346
FAX 714. 832-9427

PROJECT
LICENSED ARCHITECT JAMES L. BROESKE No. C009174 Ren. 11-30-2003 STATE OF CALIFORNIA

VILLEGAS GYM EXPANSION

7240 MARGUERITA AVE. RIVERSIDE, CA. 92504

REVISION
1. 7-25-02 1st PLAN CHECK REVISIONS
2. 04-18-03 2nd PLAN CHECK REVISIONS
3. 04-18-03 OWNER REQUESTED REVISIONS
4. 06-12-03 3rd PLAN CHECK REVISIONS
5. 08-12-03 PROJECT REVISIONS

THIS DRAWING AND THE DESIGNS, ARRANGEMENTS, DEPICTIONS, IDEAS AND OTHER INFORMATION CONTAINED HEREIN CONSTITUTE UNPUBLISHED WORK OF KROH/BROESKE ARCHITECTS AND SHALL REMAIN PROPERTY OF KROH/BROESKE ARCHITECTS IN PERPETUITY. NO PART THEREOF SHALL BE REPRODUCED, COPIED, DISCLOSED, DISTRIBUTED, SOLD, PUBLISHED OR OTHERWISE USED IN ANYWAY WITHOUT THE ADVANCE EXPRESS WRITTEN CONSENT OF KROH/BROESKE ARCHITECTS. VISUAL CONTACT WITH THE ABOVE DRAWINGS, OR ANY PART THEREOF, SHALL CONSTITUTE CONCLUSIVE EVIDENCE OF ACCEPTANCE OF THESE RESTRICTIONS.

SHEET TITLE

DRAWN	C.R.
CHECKED	D.L.
SCALE	NONE
DATE	12-12-02
JOB	01021
SHEET	E-1

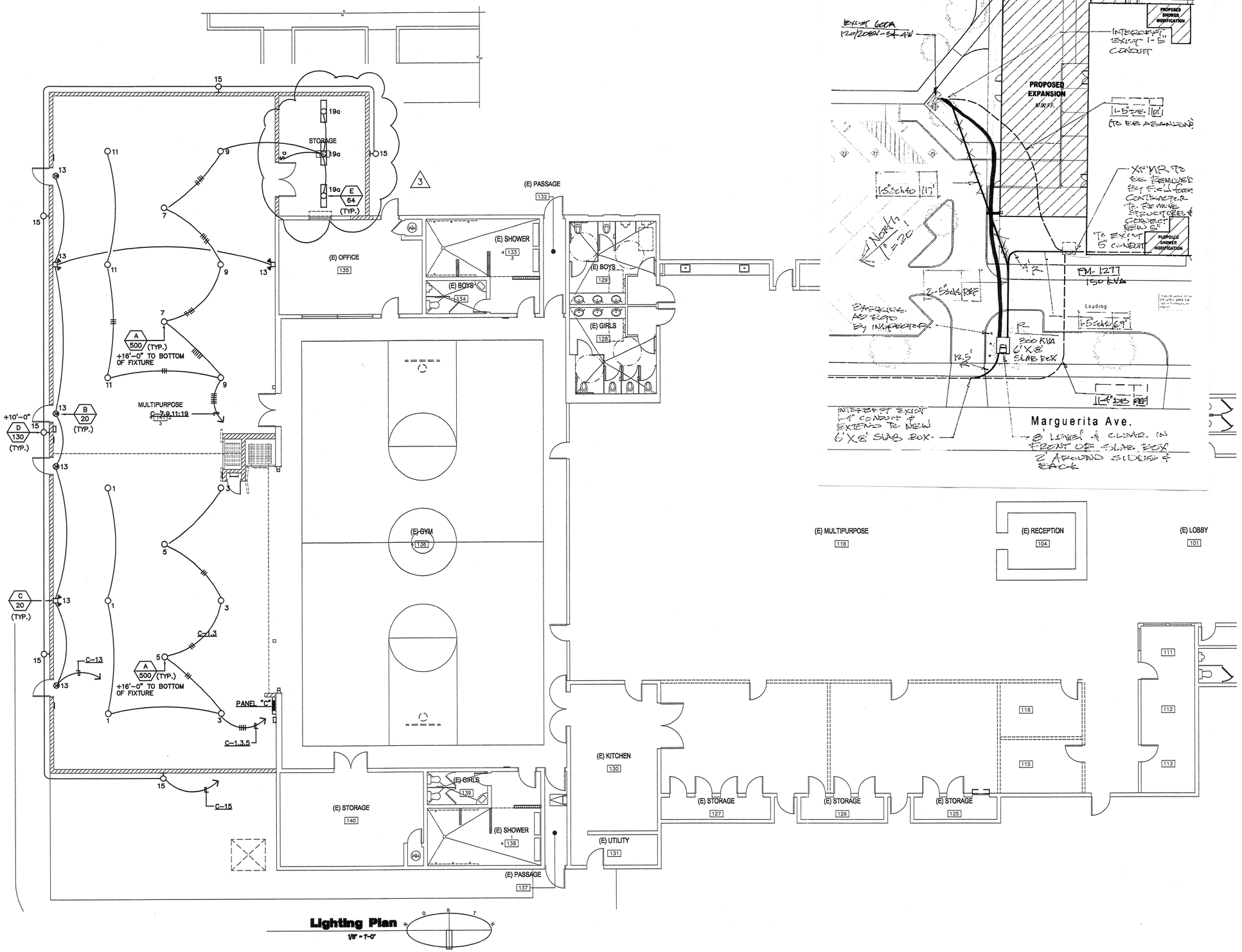

Lighting Plan
1/8" = 1'-0"

PROJECT ARCHITECT

KROHI BROESKE ARCHITECTS

6180 BROCKTON AVE. SUITE 202

RIVERSIDE, CA. 92506-2228

TEL 909-788-5940

FAX 909-788-1365

E-MAIL: KBA@KROHIBROESKE.COM

CONSULTANTS

PROJECT

LICENSED ARCHITECT JAMES L. BROESKE No. C009174 Ren. 11-30-2003 STATE OF CALIFORNIA

VILLEGAS GYM EXPANSION

7240 MARGUERITA AVE. RIVERSIDE, CA. 92504

REVISION
- 04-18-03 2nd PLAN CHECK REVISIONS
- 04-18-03 OWNER REQUESTED REVISIONS
- 06-12-03 3rd PLAN CHECK REVISIONS
- 08-12-03 PROJECT REVISIONS

THIS DRAWING AND THE SIGNS AND ARRANGEMENTS, DEPICTIONS, IDEAS AND OTHER INFORMATION CONTAINED HEREIN CONSTITUTE UNPUBLISHED WORK OF KROHI/BROESKE ARCHITECTS AND SHALL REMAIN PROPERTY OF KROHI BROESKE ARCHITECTS IN PERPETUITY. NO PART THEREOF SHALL BE REPRODUCED, COPIED, DISCLOSED, DISTRIBUTED/SOLD, PUBLISHED OR OTHERWISE USED IN ANYWAY WITHOUT THE ADVANCE EXPRESS WRITTEN CONSENT OF KROHI/BROESKE ARCHITECTS. VISUAL CONTACT WITH THE ABOVE DRAWINGS, OR ANY PART THEREOF, SHALL CONSTITUTE CONCLUSIVE EVIDENCE OF ACCEPTANCE OF THESE RESTRICTIONS.

SHEET TITLE

LIGHTING PLAN

DRAWN	D.L.
CHECKED	D.L.
SCALE	1/8" = 1'-0"
DATE	05-27-02
JOB	02029
SHEET	

E-2

BID NO. 6099

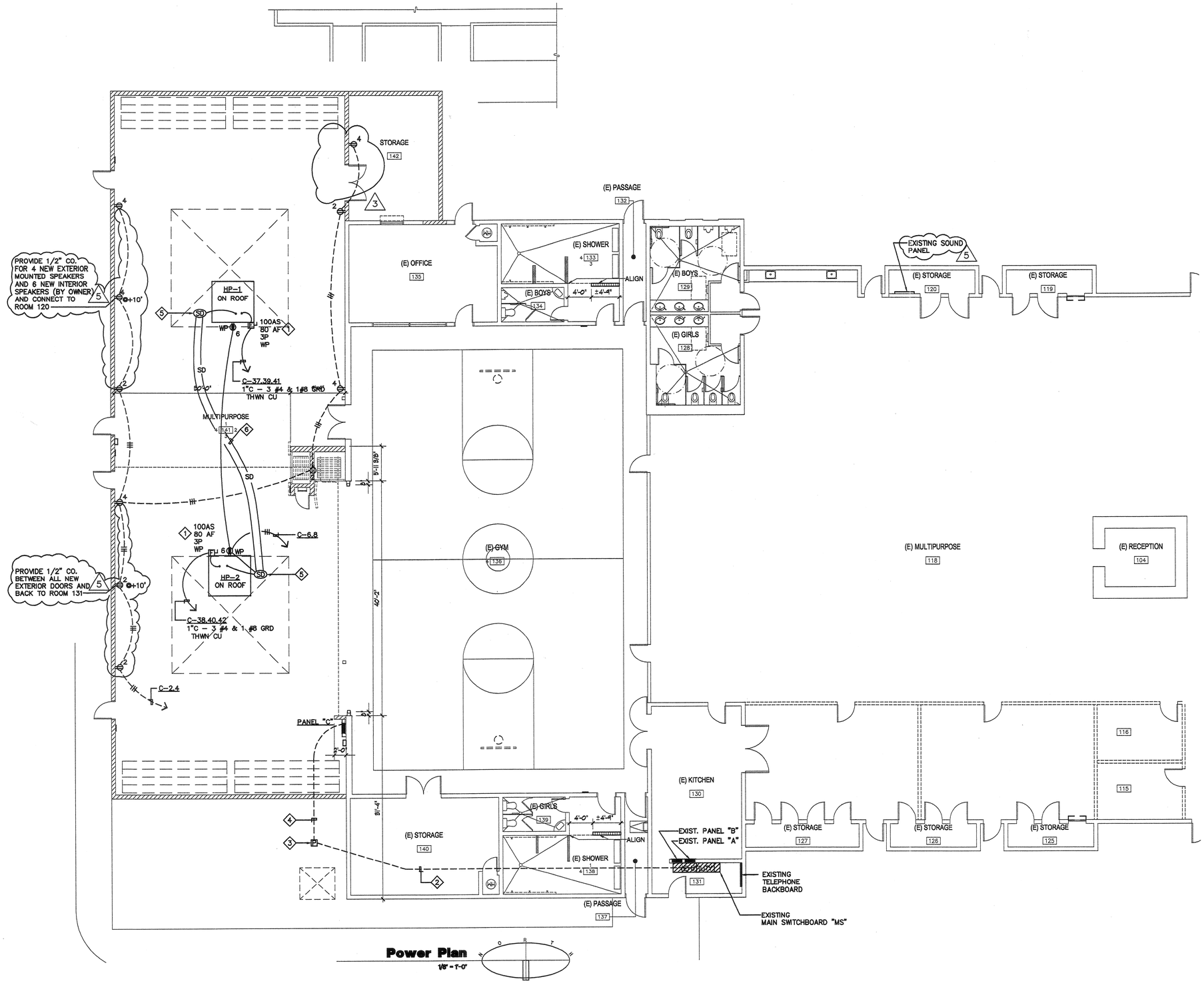

Power Plan
1/8" = 1'-0"

PLAN NOTES:

1. FUSE SIZE FOR HVAC EQUIPMENT SHALL BE AS PER NAMEPLATE RATING OR AS RECOMMENDED BY THE EQUIPMENT MANUFACTURER,
2. EXISTING 3" UNDERGROUND CONDUIT. VERIFY AT SITE.
3. INTERCEPT EXISTING 3" CONDUIT. PROVIDE A 17" X 30" X DEPTH AS REQUIRED UNDER-GROUND PRECAST CONCRETE PULL BOX WITH BOLTED DOWN STEEL TRAFFIC TYPE COVER MARKED "ELECTRIC". SET PULL BOX ON 6" COMPACTED ROCK. BROOKS 66PB SERIES OR EQUAL.
4. SEE SINGLE LINE DIAGRAM ON SHEET E-1.
5. DUCT SMOKE DETECTOR. FURNISHED BY THE MECHANICAL CONTRACTOR AND INSTALLED BY THE ELECTRICAL CONTRACTOR.
6. CONDUIT, CONTROL WIRES, RELAYS AND ACCESSORIES FURNISHED AND INSTALLED BY THIS CONTRACTOR. WHEN ANY ONE OF THE SMOKE DETECTOR IS ACTIVATED THE BLOWER OF BOTH HEAT PUMPS SHALL BE SHUT OFF. COORDINATE WORK WITH THE MECHANICAL CONTRACTOR. THIS CONTRACTOR SHALL ALSO COORDINATE WITH THE FIRE ALARM CONTRACTOR AND PROVIDE CONDUIT, WIRES AND ACCESSORIES REQUIRED TO INTERFACE WITH THE FIRE ALARM SYSTEM.

PROJECT ARCHITECT

KROHI BROESKE ARCHITECTS

6180 BROCKTON AVE. SUITE 202

RIVERSIDE, CA. 92506-2228

TEL 909-788-5940

FAX 909-788-1365

E-MAIL: KBA@KROHIBROESKE.COM

CONSULTANTS

Electrical Engineering
Consolidated Engineering
14681 Myford Road, Suite C
Tustin, CA 92780
PH. 714. 832-6346
FAX 714. 832-9427

PROJECT

LICENSED ARCHITECT
JAMES L. BROESKE
No. C009174
Ren. 11-30-2003
STATE OF CALIFORNIA

VILLEGAS GYM EXPANSION

7240 MARQUERITA AVE.
RIVERSIDE, CA. 92504

REVISION

- 01-28-03 1st PLAN CHECK REVISIONS
- 04-18-03 2nd PLAN CHECK REVISIONS
- 04-18-03 OWNER REQUESTED REVISIONS
- 05-12-03 3rd PLAN CHECK REVISIONS
- 06-12-03 PROJECT REVISIONS

THIS DRAWING AND THE DESIGNS, ARRANGEMENTS, DEPICTIONS, IDEAS AND OTHER INFORMATION CONTAINED HEREIN CONSTITUTE UNPUBLISHED WORK OF KROHI/BROESKE ARCHITECTS AND SHALL REMAIN PROPERTY OF KROHI/ BROESKE ARCHITECTS IN PERPETUITY. NO PART THEREOF SHALL BE REPRODUCED, COPIED, DISCLOSED, DISTRIBUTED/SOLD, PUBLISHED OR OTHERWISE USED IN ANYWAY WITHOUT THE ADVANCE EXPRESS WRITTEN CONSENT OF KROHI/BROESKE ARCHITECTS. VISUAL CONTACT WITH THE ABOVE DRAWINGS, OR ANY PART THEREOF, SHALL CONSTITUTE CONCLUSIVE EVIDENCE OF ACCEPTANCE OF THESE RESTRICTIONS.

SHEET TITLE

POWER PLAN

DRAWN	D.L.
CHECKED	D.L.
SCALE	1/8" = 1'-0"
DATE	05-27-02
JOB	02029
SHEET	E-3

BID NO. 6099