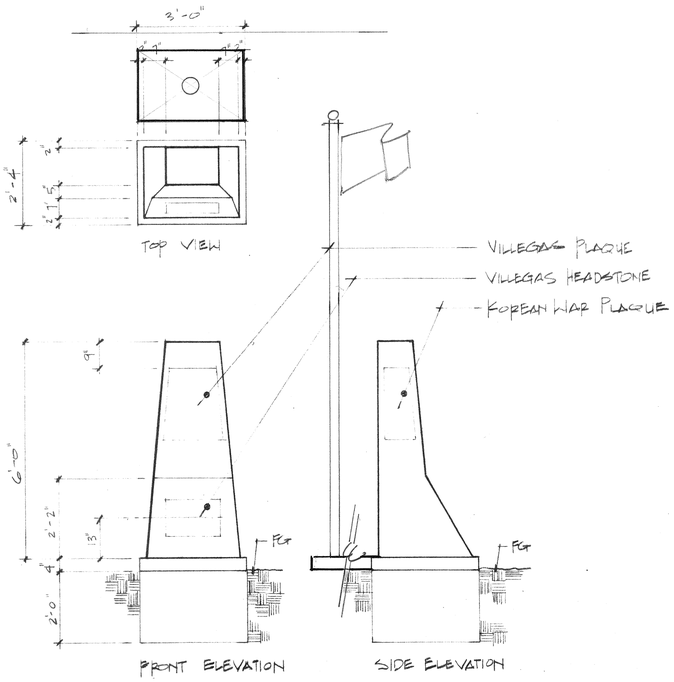

VILLEGAS MEMORIAL
SCALE 1/2" = 1'-0"

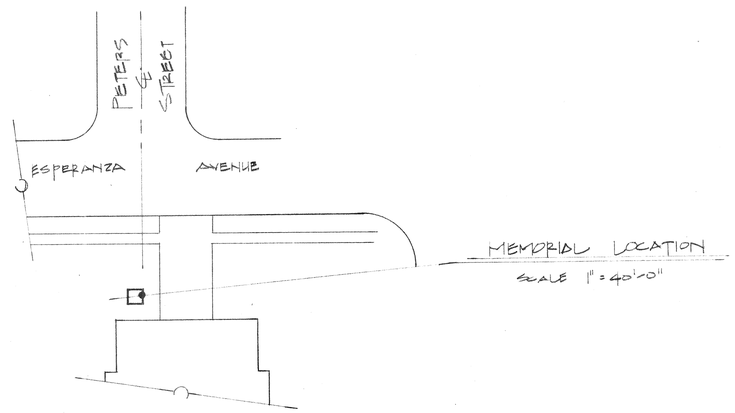

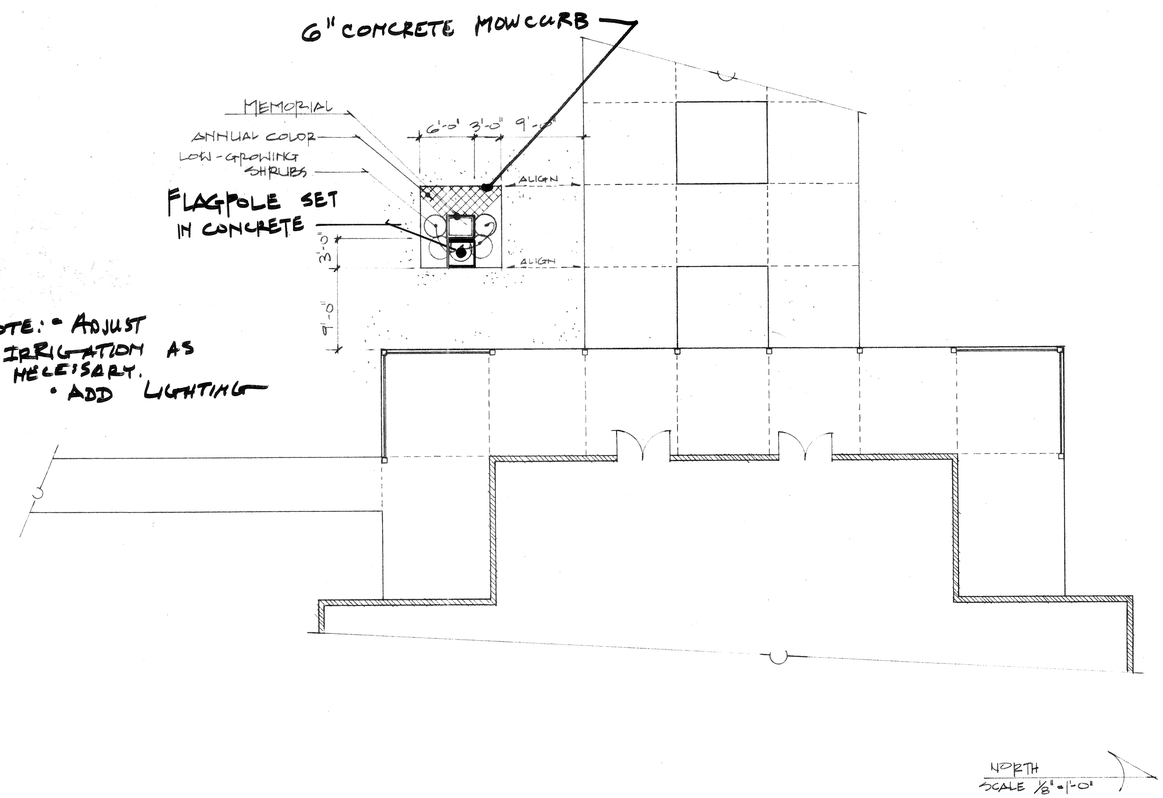

NOTE: • ADJUST IRRIGATION AS NECESSARY.
• ADD LIGHTING

ISMAEL VILLEGAS MEMORIAL
VILLEGAS PARK

city of riverside
park & recreation
department
(714) 787-7223
3900 MAIN ST RIVERSIDE, CALIFORNIA 92522

2.50 ¢
25% cont.
100% conc. gr

revisions	by

date	2/11/87
design	
drawn	
check	
acc't.no.	
SHEET	
1 of 1	