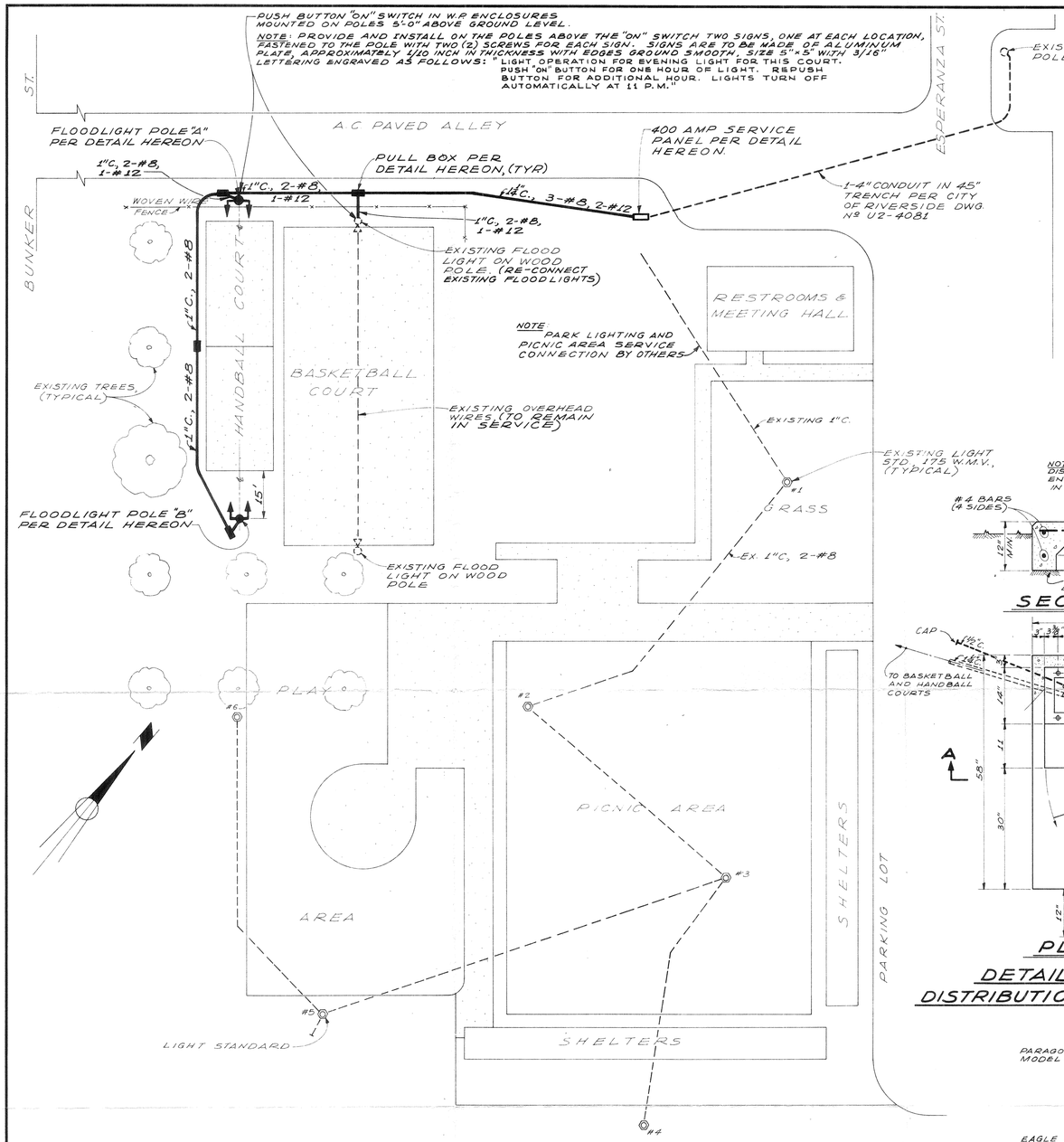


## PLOT PLAN

SCALE: 1" = 20'

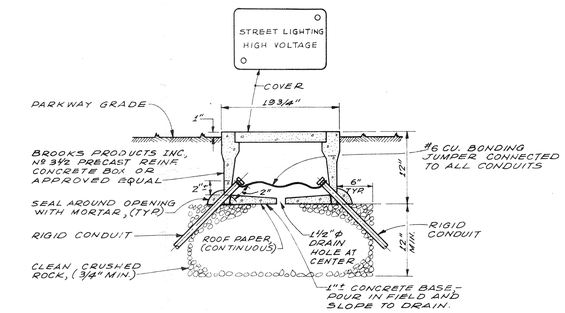


## PULL BOX DETAIL

NO SCALE

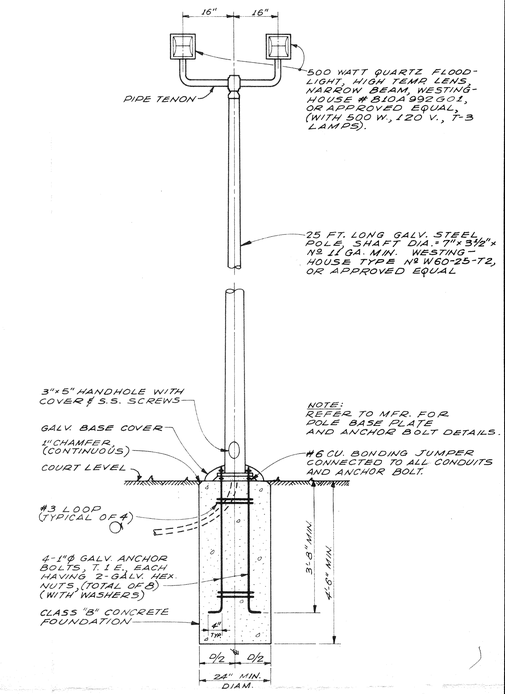


NOTE: REFER TO MFR. FOR POLE BASE PLATE AND ANCHOR BOLT DETAILS.

## FLOODLIGHT POLE DETAIL

NO SCALE

NOTE:

MANUFACTURER OF SWITCHGEAR TO FURNISH THREE (3) DRAWINGS TO PUBLIC UTILITIES DEPARTMENT, 8095 LINCOLN, RIVERSIDE, CALIF. 92504. ATTENTION: RAY METTE FOR APPROVAL PRIOR TO FABRICATION.

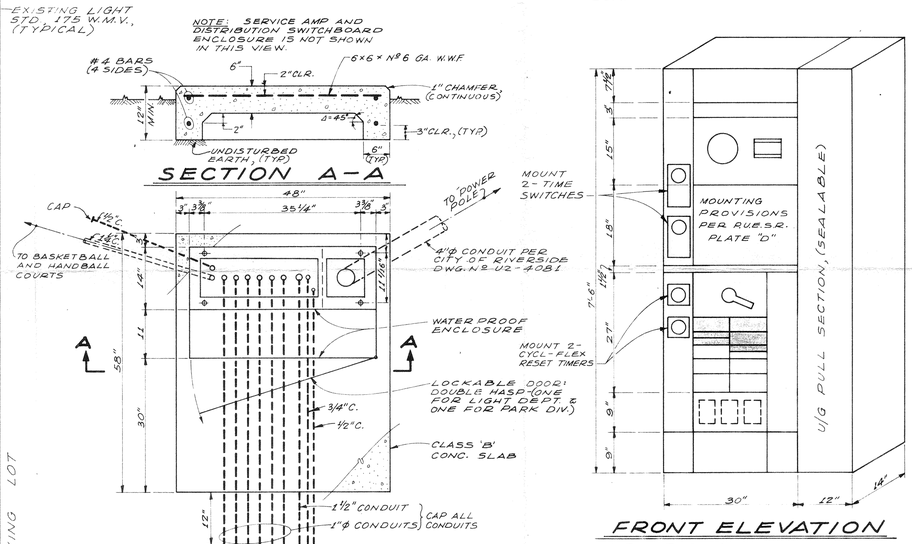


NOTE:- THIS VIEW DOES NOT SHOW THE FRONT WATERPROOF ENCLOSURE, NOR THE CONCRETE SLAB.

## DETAILS OF WEATHERPROOF MAIN SERVICE AND DISTRIBUTION SWITCHBOARD INSTALLATION, (SQ. "D" TYPE QMB-M.C.S. OR EQUAL)

SCALE: 3/4" = 1'-0"

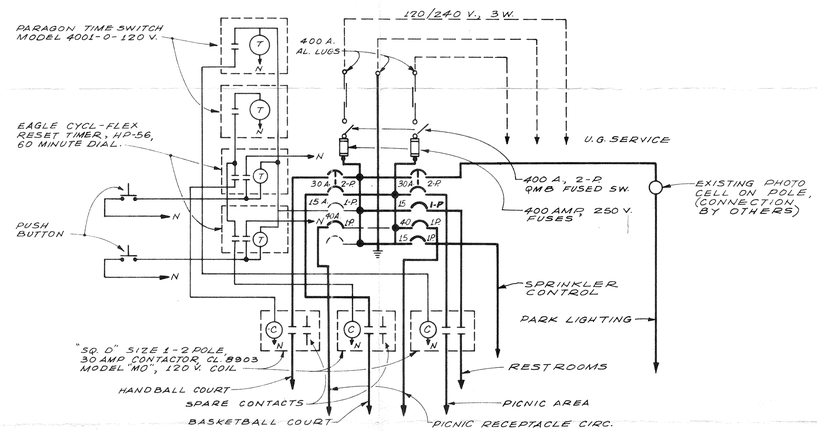


## SWITCHBOARD WIRING DIAGRAM

GENERAL NOTES:

1.- CONTRACTOR IS RESPONSIBLE TO PROTECT, PRESERVE, ETC. ALL EXISTING UNDERGROUND AND OVERHEAD FACILITIES SHOWN OR NOT SHOWN ON THESE DRAWINGS.

2.- EXACT POSITION OF ALL FACILITIES SHALL MEET THE APPROVAL OF THE PARK AND RECREATION DIRECTOR.

APPROVED:
ALBERT A. WEBB ASSOC'S.
R.E. Nº E-4395
1-27-70
DATE

| REVISIONS | DATE | BY |
|---|---|---|
| | | |

CITY OF RIVERSIDE
PARK AND RECREATION DEPARTMENT

# VILLEGAS PARK LIGHTING LAYOUT PLAN AND DETAILS

| | | |
|---|---|---|
| SCALE: As Noted | ALBERT A. WEBB ASSOCIATES CIVIL ENGINEERS | W.O. 69-302 |
| DATE: 1-27-70 | | SHEET |
| DRAWN: A.B.I. | | OF SHEETS |
| TRACED | | |
| CHECKED: HWK | RIVERSIDE CALIFORNIA | DWG. NO. 69-302 |
| F.B. | | |