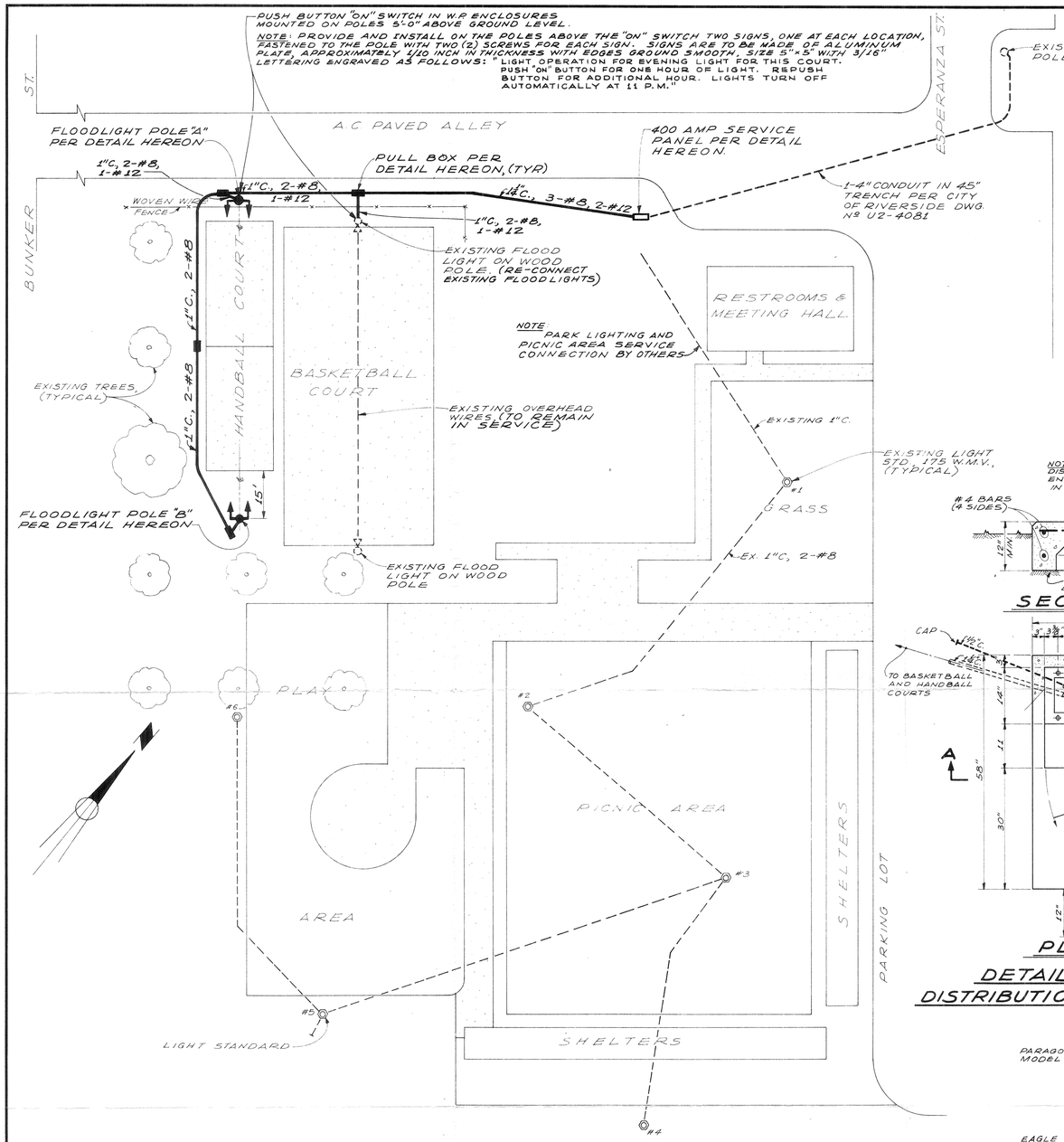

PLOT PLAN

SCALE: 1" = 20'

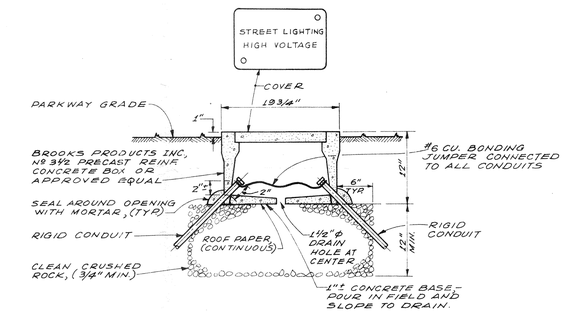

PULL BOX DETAIL

NO SCALE

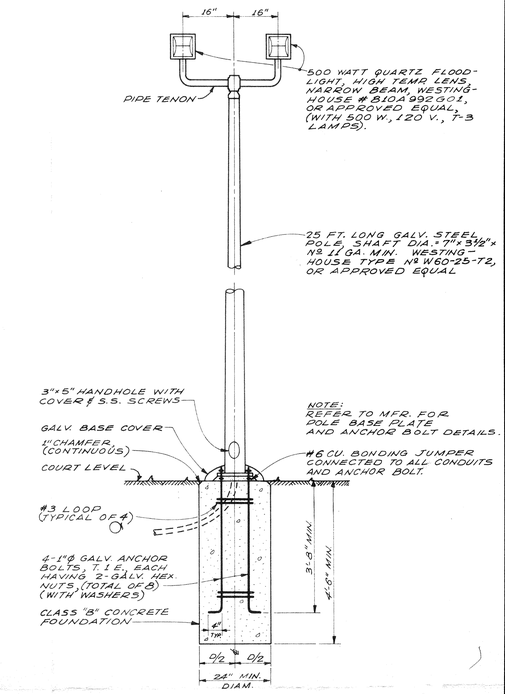

NOTE: REFER TO MFR. FOR POLE BASE PLATE AND ANCHOR BOLT DETAILS.

FLOODLIGHT POLE DETAIL

NO SCALE

NOTE:

MANUFACTURER OF SWITCHGEAR TO FURNISH THREE (3) DRAWINGS TO PUBLIC UTILITIES DEPARTMENT, 8095 LINCOLN, RIVERSIDE, CALIF. 92504. ATTENTION: RAY METTE FOR APPROVAL PRIOR TO FABRICATION.

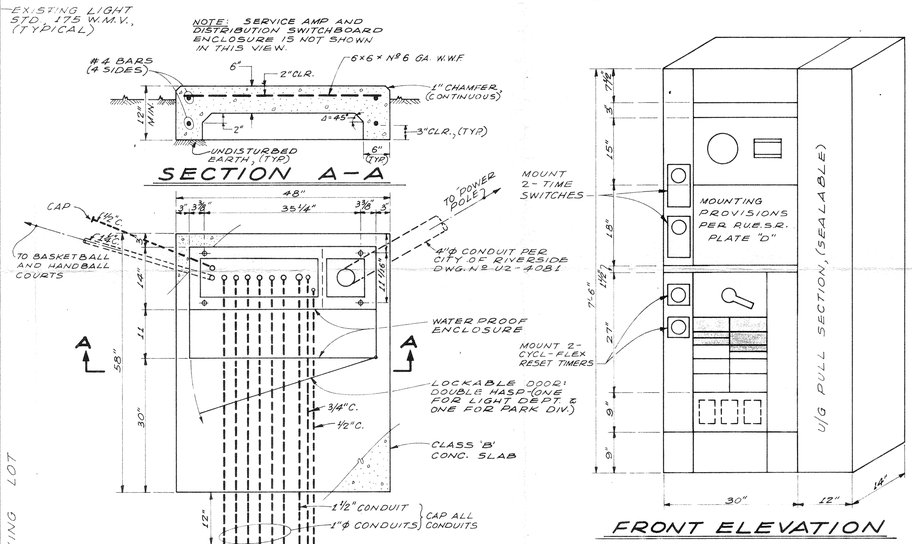

NOTE:- THIS VIEW DOES NOT SHOW THE FRONT WATERPROOF ENCLOSURE, NOR THE CONCRETE SLAB.

DETAILS OF WEATHERPROOF MAIN SERVICE AND DISTRIBUTION SWITCHBOARD INSTALLATION, (SQ. "D" TYPE QMB-M.C.S. OR EQUAL)

SCALE: 3/4" = 1'-0"

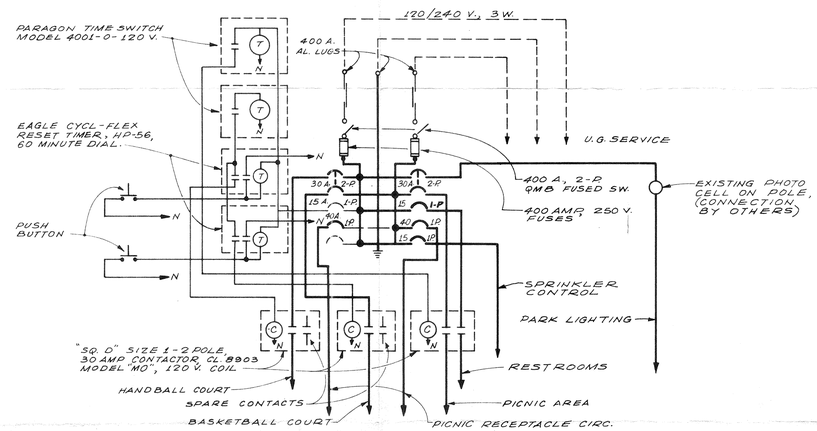

SWITCHBOARD WIRING DIAGRAM

GENERAL NOTES:

1.- CONTRACTOR IS RESPONSIBLE TO PROTECT, PRESERVE, ETC. ALL EXISTING UNDERGROUND AND OVERHEAD FACILITIES SHOWN OR NOT SHOWN ON THESE DRAWINGS.

2.- EXACT POSITION OF ALL FACILITIES SHALL MEET THE APPROVAL OF THE PARK AND RECREATION DIRECTOR.

APPROVED:
ALBERT A. WEBB ASSOC'S.
R.E. Nº E-4395
1-27-70
DATE

REVISIONS	DATE	BY

CITY OF RIVERSIDE
PARK AND RECREATION DEPARTMENT

VILLEGAS PARK LIGHTING LAYOUT PLAN AND DETAILS

SCALE: As Noted	ALBERT A. WEBB ASSOCIATES CIVIL ENGINEERS	W.O. 69-302
DATE: 1-27-70		SHEET
DRAWN: A.B.I.		OF SHEETS
TRACED		
CHECKED: HWK	RIVERSIDE CALIFORNIA	DWG. NO. 69-302
F.B.		