THUNDERSKY PARK
8.7 ACRE ADDITION

ORANGECREST COUNTRY
RIVERSIDE, CALIFORNIA

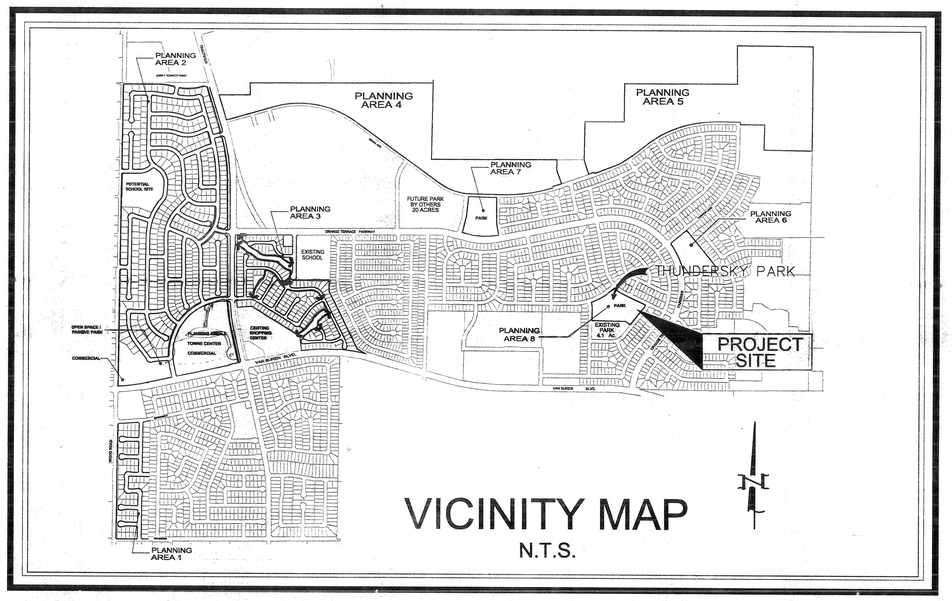

SHEET INDEX

T-1 TITLE SHEET
D-1 EXISTING CONDITIONS/DEMOLITION PLAN
G-1 - G-2 GRADING PLAN/NOTES
C-1 CONSTRUCTION PLAN
C-2 - C-3 CONSTRUCTION DETAILS
E-1 - E-3 ELECTRICAL/LIGHTING PLANS
I-1 IRRIGATION PLAN
I-2 IRRIGATION DETAILS
L-1 PLANTING PLAN
L-2 PLANTING DETAILS

DEVELOPER

COMMUNITY SOUTHWEST
181 OLD SPRINGS ROAD
ANAHEIM, CALIFORNIA 92808
1.714.279.6555

CONTACT

MARY RAUSCHENBURG

00-3468
9-22-00
JLB

ROUGH GRADING PLAN
LOT "D" - TRACT 22551 IN THE CITY OF RIVERSIDE

N.P.D.E.S. NOTE

FOR GRADING OF AREAS OF 5 ACRES OR MORE, A STORM WATER PREVENTION PLAN (SWPPP) SHALL BE KEPT ON-SITE AND MADE AVAILABLE UPON REQUEST OF A REPRESENTATIVE OF THE REGIONAL WATER QUALITY CONTROL BOARD (RWQCB) - SANTA ANA REGION AND/OR THE CITY OF RIVERSIDE

-INTERIM EROSION CONTROL PROGRAM TO BE CERTIFIED BY THE PROJECT ENGINEER SUBJECT TO PUBLIC WORKS DEPARTMENT REVIEW AND APPROVAL
-ALL GRADING OPERATIONS WILL BE RESTRICTED TO WEEKDAY HOURS BETWEEN 7:00 AM AND 7:00 PM AND ON SATURDAYS BETWEEN 8:00 AM AND 5:00 PM.

-GRADING OPERATIONS WILL BE CONDUCTED IN COMPLIANCE WITH SCAQMU TO INCLUDE REGULAR WATERING OF GRADED SURFACES, RESTRICTION OF CONSTRUCTION TRAVEL TO ESTABLISHED AND REGULARLY WATERED ROADWAYS, AND SUSPENSION OF OPERATIONS DURING WINDY CONDITIONS.

EROSION CONTROL NOTES

1. A STANDBY CREW FOR EMERGENCY WORK SHALL BE AVAILABLE AT ALL TIMES DURING THE RAINY SEASON. NECESSARY MATERIALS SHALL BE AVAILABLE ON-SITE AND STOCKPILED AT CONVENIENT LOCATIONS TO FACILITATE RAPID CONSTRUCTION OF TEMPORARY DEVICES OR TO REPAIR ANY DAMAGED EROSION CONTROL MEASURES WHEN RAIN IS IMMINENT.

2. DEVICES SHALL NOT BE MOVED OR MODIFIED WITHOUT THE APPROVAL OF THE CITY INSPECTOR.

3. ALL REMOVABLE PROTECTIVE DEVICES SHALL BE IN PLACE AT THE END OF EACH WORKING DAY, WHEN THE FIVE-DAY RAIN PROBABILITY FORECAST EXCEEDS 40 PERCENT.

4. AFTER A RAINSTORM, ALL SILT AND DEBRIS SHALL BE REMOVED FROM CHECK BERMS AND DESILTING BASINS. ANY GRADED SLOPE SURFACE PROTECTION MEASURES DAMAGED DURING A RAINSTORM SHALL ALSO BE IMMEDIATELY REPAIRED.

5. THE FACES OF CUT AND FILL SLOPES SHALL BE PREPARED AND MAINTAINED TO CONTROL AGAINST EROSION. EROSION PROTECTION SHALL CONSIST OF EFFECTIVE PLANTING OF ALL SLOPES IN EXCESS OF FIVE (5) FEET HIGH UNLESS OTHERWISE APPROVED BY THE CITY ENGINEER. SLOPES EXCEEDING FIFTEEN (15) FEET HIGH MAY REQUIRE AN ADEQUATE SPRINKLER SYSTEM, AS DETERMINED BY THE CITY ENGINEER. THE SLOPE PROTECTION SHALL BE INSTALLED AS SOON AS PRACTICABLE AND PRIOR TO CALLING FOR FINAL INSPECTION.

6. GRADED AREAS AROUND THE TRACT PERIMETER MUST DRAIN AWAY FROM THE FACE OF SLOPE AT THE CONCLUSION OF EACH WORKING DAY.

LEGEND

1500	--- EXISTING CONTOUR
	--- STREET CENTER LINE
	--- CURB LINE
	--- STREET R.W LINE
	--- TRACT BOUNDARY
	--- FLOW LINE
	--- SANDBAGS

QUANTITIES (RAW QUANTITIES)

CY. CUT	CY. FILL	
10,015	8,498	
-0-	1,166	16% SHRINKAGE (AVERAGE OF SOILS REPORT)
10,015	9,664 = 351 CY. EXCESS	
-0-		

NOTE: EXCESS OR DEFICIENCIES IN MATERIAL SHALL BE ADJUSTED ON THE SITE TO BALANCE.

SITE AREA = 8.6 ACRES

GENERAL NOTES

CITY OF RIVERSIDE

GRADING NOTES:

1. ALL GRADING SHALL CONFORM TO THE RIVERSIDE MUNICIPAL CODE, TITLE 17 AND APPENDIX CHAPTER 33, VOL. 1 OF THE CURRENT CITY-ADOPTED EDITION OF THE UNIFORM BUILDING CODE.

2. ALL PROVISIONS OF THE PRELIMINARY SOILS REPORT PREPARED BY GEOSOILS INC., DATED 3/14/00, SHALL BE COMPLIED WITH DURING GRADING OPERATIONS. CITY BUSINESS TAX CERT. NO. 31230, EXP. DATE: 4/18/00.

3. THIS PLAN IS FOR GRADING PURPOSES ONLY AND IS NOT TO BE USED FOR THE PURPOSE OF CONSTRUCTING ON-SITE OR OFF-SITE IMPROVEMENTS. ISSUANCE OF A PERMIT BASED ON THIS PLAN DOES NOT CONSTITUTE APPROVAL OF DRIVEWAY LOCATIONS OR SIZES, PARKING LOT STRUCTURAL SECTIONS OR LAYOUT, ADA-RELATED REQUIREMENTS, BUILDING LOCATIONS OR FOUNDATIONS, WALLS, CURBING, OFF-SITE DRAINAGE FACILITIES OR OTHER ITEMS NOT RELATED DIRECTLY TO THE BASIC GRADING OPERATION. ON-SITE IMPROVEMENTS SHALL BE CONSTRUCTED FROM APPROVED BUILDING PERMIT PLANS. OFF-SITE IMPROVEMENTS SHALL BE CONSTRUCTED FROM PLANS APPROVED FOR THIS PURPOSE BY THE PUBLIC WORKS DEPARTMENT.

4. CERTIFICATION FROM THE REGISTERED CIVIL ENGINEER STATING THAT THE GRADING HAS BEEN COMPLETED PER THE APPROVED PLAN, AND A COMPACTION REPORT FROM THE SOILS ENGINEER FOR FILL AREAS ARE REQUIRED PRIOR TO BUILDING PERMITS BEING ISSUED.

5. CONTRACTOR IS RESPONSIBLE FOR EROSION, DUST AND TEMPORARY DRAINAGE CONTROL DURING GRADING OPERATIONS.

   ALL MANUFACTURED SLOPES IN EXCESS OF 5 FEET IN VERTICAL HEIGHT ARE TO BE PROTECTED FROM EROSION DURING ROUGH GRADING OPERATIONS AND, THEREAFTER, UNTIL INSTALLATION OF FINAL GROUNDCOVER.

   ALL SLOPE PROTECTION SWALES TO BE CONSTRUCTED AT THE SAME TIME AS BANKS ARE GRADED.

   THE DEVELOPER AND HIS CONTRACTOR ARE RESPONSIBLE FOR IMPLEMENTATION AND MAINTENANCE OF THE EROSION CONTROL MEASURES SHOWN ON THIS PLAN AND SWPPP AND ALSO TO PROVIDE ANY ADDITIONAL EROSION CONTROL MEASURES (E.G. HYDROSEEDING, MULCHING OF STRAW, SANDBAGGING, DIVERSION DITCHES, RETENTION BASINS, ETC.) DICTATED BY FIELD CONDITIONS TO PREVENT EROSION AND/OR THE INTRODUCTION OF DIRT, MUD OR DEBRIS INTO EXISTING PUBLIC STREETS AND/OR ONTO ADJACENT PROPERTIES DURING ANY PHASE OF CONSTRUCTION OPERATIONS. SPECIAL ATTENTION SHALL BE GIVEN TO ADDITIONAL EROSION CONTROL MEASURES NOTED ABOVE DURING THE PERIOD OCTOBER 15 TO APRIL 15.

   AFTER A RAINSTORM, ALL SILT AND DEBRIS SHALL BE REMOVED FROM CHECK BERMS AND CHECK DAMS. SILT AND DEBRIS SHALL BE REMOVED FROM CITY OF RIVERSIDE STREETS. THIS REQUIREMENT SHALL REMAIN IN EFFECT UNTIL CITY ACCEPTANCE OF THE SUBDIVISION THAT DRAINS ONTO CITY STREETS.

6. ANY IMPROVEMENTS CONSTRUCTED IN THE PUBLIC RIGHT-OF-WAY WILL REQUIRE A SEPARATE CONSTRUCTION PERMIT AND INSPECTION FROM THE PUBLIC WORKS DEPARTMENT.

7. ANY WALLS, FENCES, STRUCTURES AND/OR APPURTENANCES ADJACENT TO THIS PROJECT ARE TO BE PROTECTED IN PLACE. IF GRADING OPERATIONS DAMAGE OR ADVERSELY AFFECT SAID ITEMS IN ANY WAY, THE CONTRACTOR AND/OR DEVELOPER IS RESPONSIBLE FOR WORKING OUT AN ACCEPTABLE SOLUTION TO THE SATISFACTION OF THE AFFECTED PROPERTY OWNER(S).

8. IT IS THE GRADING CONTRACTOR'S RESPONSIBILITY TO ENSURE THAT ADEQUATE COMPACTION HAS BEEN ATTAINED ON THE ENTIRE GRADING SITE, INCLUDING FILL AREAS OUTSIDE THE BUILDING PADS AND ON ALL FILL SLOPES.

9. IT IS THE SOIL ENGINEER'S RESPONSIBILITY TO OBSERVE AND PERFORM COMPACTION TESTS DURING THE GRADING TO EVALUATE THE PREPARATION OF THE NATURAL GROUND SURFACE TO RECEIVE THE FILL AND THE COMPACTION ATTAINED IN THE FILL, INCLUDING FILL AREAS OUTSIDE THE BUILDING PADS AND ON ALL FILL SLOPES.

10. EARTHWORK QUANTITIES ARE SHOWN FOR GRADING PERMIT PURPOSES ONLY, AND THE CITY OF RIVERSIDE IS NOT RESPONSIBLE FOR THEIR ACCURACY.

11. FOR GRADING OF AREAS OF 5 ACRES OR MORE, A STORM WATER POLLUTION PREVENTION PLAN (SWPPP) SHALL BE KEPT ON-SITE AND MADE AVAILABLE UPON REQUEST OF A REPRESENTATIVE OF THE REGIONAL WATER QUALITY CONTROL BOARD (RWQCB) - SANTA ANA REGIONAL AND/OR THE CITY OF RIVERSIDE.

12. GRADING OPERATIONS SHALL BE LIMITED TO BETWEEN THE HOURS OF 7 A.M. AND 7 P.M. ON WEEKDAYS AND BETWEEN 8 A.M. AND 5 P.M. ON SATURDAYS. NO GRADING WILL BE PERMITTED ON SUNDAY OR FEDERAL HOLIDAYS. (RIVERSIDE MUNICIPAL CODE, 7.35.010, ORDINANCE NO. 6273.)

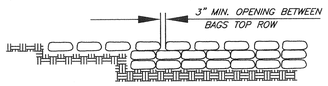

DETAIL A-A
N.T.S.

SANDBAG VELOCITY REDUCER
N.T.S.

GRAVEL BAGS ARE ENCOURAGED OVER THE USE OF SANDBAGS AND MAY BE REQUIRED IN AREAS WHICH ARE PARTICULARLY SENSITIVE TO SEDIMENT DEPOSITION.

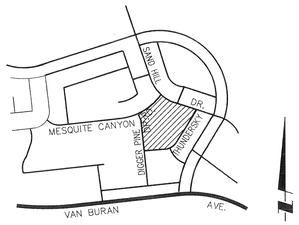

VICINITY MAP
N.T.S.

NATIONAL POLLUTION DISCHARGE ELIMINATION SYSTEM PERMIT NO. 8 33S313105

NOTE: A PRECISE GRADING PLAN WILL BE REQUIRED PRIOR TO ISSUANCE OF CONSTRUCTION PERMITS FOR THIS SITE.

PARKS AND RECREATION DEPT.
APPROVED BY [signature] DATE 6.15.00

REGISTERED PROFESSIONAL ENGINEER RICHARD N. YALE NO. 040023 Exp. 12/31/01 CIVIL STATE OF CALIFORNIA

REVIEWED BY:
WESTERN MUNICIPAL WATER DISTRICT
for Non-Interference Compliance
SHEET G1 THROUGH G2
CIVIL ENGINEER [signature] 3/30/00 R.C.E. 46212
DATE:

CHARTER COMMUNICATIONS
APPROVED BY [signature] DATE 3-27-00

CITY OF RIVERSIDE
OVERHEAD & UNDERGROUND
APPROVED BY [signature] DATE 3-27-00

SOUTHERN CALIFORNIA GAS COMPANY
APPROVED BY [signature] DATE 4/2/00

CALL BEFORE YOU DIG
Underground Service Alert
Call: TOLL FREE 1-800 227-2600
TWO WORKING DAYS BEFORE YOU DIG

PRIVATE ENGINEERING NOTE

CONSTRUCTION CONTRACTOR AGREES THAT IN ACCORDANCE WITH GENERALLY ACCEPTED CONSTRUCTION PRACTICES, CONSTRUCTION CONTRACTOR WILL BE REQUIRED TO ASSUME SOLE AND COMPLETE RESPONSIBILITY FOR JOB SITE CONDITIONS DURING THE COURSE OF CONSTRUCTION OF THE PROJECT, INCLUDING SAFETY OF ALL PERSONS AND PROPERTY; THAT THIS REQUIREMENT SHALL BE MADE TO APPLY CONTINUOUSLY AND NOT BE LIMITED TO NORMAL WORKING HOURS, AND CONSTRUCTION CONTRACTOR FURTHER AGREES TO DEFEND, INDEMNIFY AND HOLD DESIGN PROFESSIONAL HARMLESS FROM ANY AND ALL LIABILITY, REAL OR ALLEGED, IN CONNECTION WITH THE PERFORMANCE OF WORK ON THIS PROJECT, EXCEPTING LIABILITY ARISING FROM THE SOLE NEGLIGENCE OF DESIGN PROFESSIONAL.

BENCHMARK

RIVERSIDE COUNTY BENCHMARK, STAMPED V88-84
AT SOUTHWEST CORNER OF PLUMMER ROAD AND VAN BUREN BOULEVARD. 259.0 FEET SOUTH OF VAN BUREN BOULEVARD. 205.0 FEET WEST OF PLUMMER ROAD, ON THE TOP OF A 4.0 FOOT x 10.0 FOOT GRANITE BOULDER A BRASS DISK FLUSH AND MARKED.
ELEV. 1636.123

REGISTERED PROFESSIONAL ENGINEER RICHARD N. YALE NO. 040023 Exp. 12/31/01 CIVIL STATE OF CALIFORNIA

The Keith Companies TKC
22690 Cactus Avenue, Suite 300 Moreno Valley, CA 92553-9024 (909) 653-0234
APPROVED BY: [signature]
DATE: 5-26-00 RICHARD N. YALE R.C.E. NO. 40023 REGISTRATION EXPIRES 12/31/01
CITY BUSINESS TAX CERTIFICATE NO. 033565 EXP. DATE 4/3/00

MARK	REVISIONS:	APPR.	DATE

DESIGNED BY DPH DRAWN BY MAG CHECKED BY TEB

CITY OF RIVERSIDE
PLANNING DEPARTMENT
PLANNING REVIEW
APPROVED BY: [signature] DATE 6/19/00

ROUGH GRADING PLAN
LOT "D" - TRACT 22551
ZONING CASE OZ-001-023
TITLE SHEET

HORIZ. SCALE: AS SHOWN VERT. SCALE:

ACCOUNT NO. 31586.000
SHEET 1 OF 2

David Neault Associates
landscape architecture
planning
golf course architecture
41877 enterprise circle north suite 108a
temecula california 92590
909 699.6671
fax: 909 676.2793
e-mail dna_asla@msn.com

THUNDERSKY PARK
8.7 ACRE ADDITION
GRADING PLAN

ORANGECREST COUNTRY
Communities Southwest
181 old springs road
anaheim, california 92808
1 714 279.6555 fax 1714 279.6556
contact: Mary Rauschenburg

north

date: 12/1/99
drawn: ret
checked: dsn
scale: 1"=30'-0"
sheet
G-1
of 2 sheets

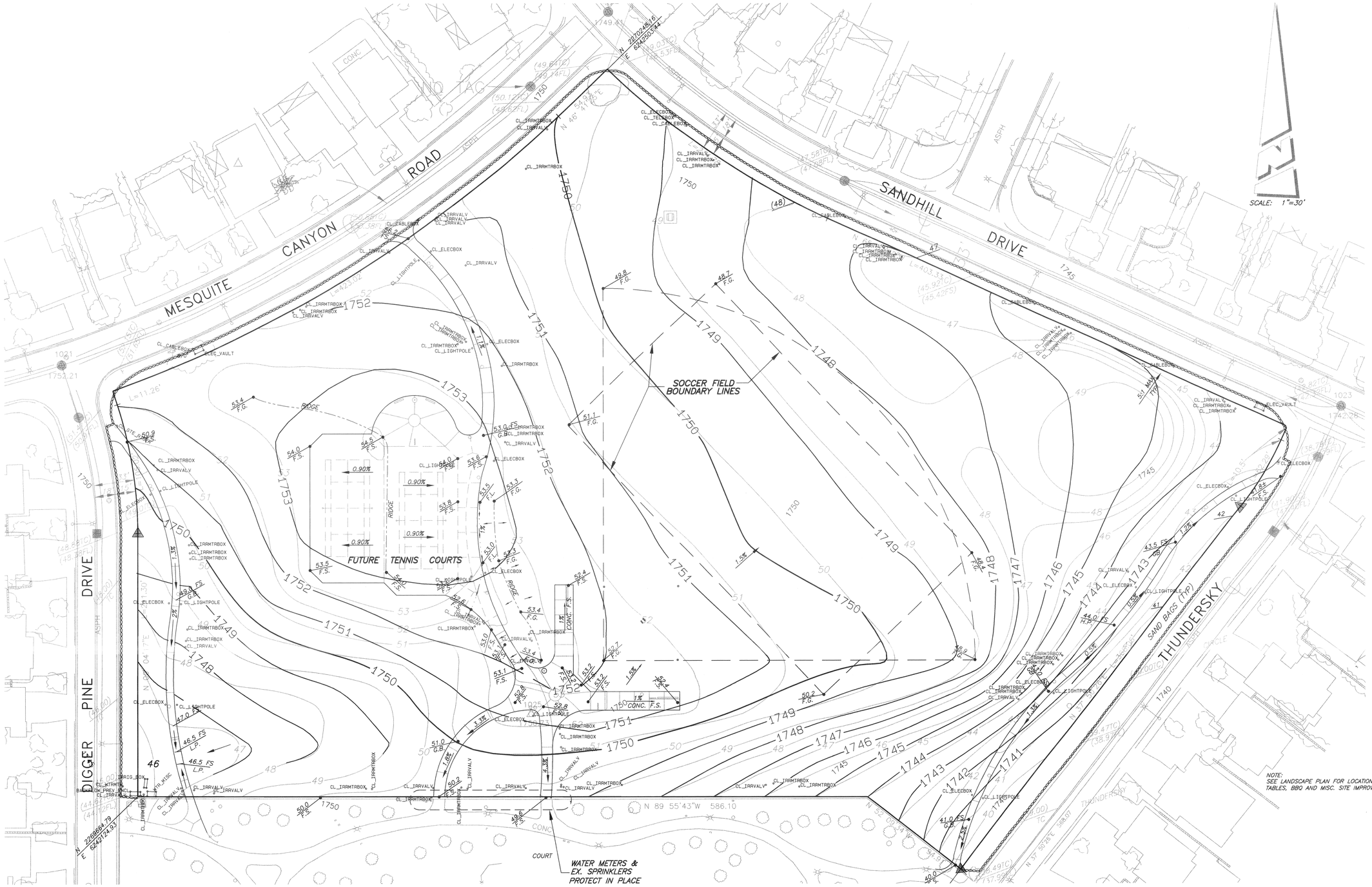

NOTE:
SEE LANDSCAPE PLAN FOR LOCATION OF TABLES, BBQ AND MISC. SITE IMPROVEMENTS.

NOTE:
ALL HARD SCAPE, TENNIS COURTS, SIDE WALKS, PICINIC TABLES, LIGHTS, BBQS AND BIKE RACKS TO BE DONE BY OTHERS.

LEGEND :

1750 — AS-BUILT CONTOURS PER FIELD SURVEY, 8/3/00 & 9/15/00

40 — PROP. CONTOURS PER APPROVED GRADING PLAN, 6/10/00

"AS - BUILT"

6-6-01

NATIONAL POLLUTION DISCHARGE ELIMINATION SYSTEM
PERMIT NO. 8 33S313105

Underground Service Alert
Call: TOLL FREE
1-800 227-2600
TWO WORKING DAYS BEFORE YOU DIG

PRIVATE ENGINEERING NOTE

CONSTRUCTION CONTRACTOR AGREES THAT IN ACCORDANCE WITH GENERALLY ACCEPTED CONSTRUCTION PRACTICES, CONSTRUCTION CONTRACTOR WILL BE REQUIRED TO ASSUME SOLE AND COMPLETE RESPONSIBILITY FOR JOB SITE CONDITIONS DURING THE COURSE OF CONSTRUCTION OF THE PROJECT, INCLUDING SAFETY OF ALL PERSONS AND PROPERTY; THAT THIS REQUIREMENT SHALL BE MADE TO APPLY CONTINUOUSLY AND NOT BE LIMITED TO NORMAL WORKING HOURS, AND CONSTRUCTION CONTRACTOR FURTHER AGREES TO DEFEND, INDEMNIFY AND HOLD DESIGN PROFESSIONAL HARMLESS FROM ANY AND ALL LIABILITY, REAL OR ALLEGED, IN CONNECTION WITH THE PERFORMANCE OF WORK ON THIS PROJECT, EXCEPTING LIABILITY ARISING FROM THE SOLE NEGLIGENCE OF DESIGN PROFESSIONAL.

BENCHMARK

RIVERSIDE COUNTY BENCHMARK, STAMPED VBB-64 AT SOUTHWEST CORNER OF PLUMMER ROAD AND VAN BUREN BOULEVARD. 259.0 FEET SOUTH OF VAN BUREN BOULEVARD. 205.0 FEET WEST OF PLUMMER ROAD, ON THE TOP OF A 4.0 FOOT x 10.0 FOOT GRANITE BOULDER A BRASS DISK FLUSH AND MARKED.
ELEV. 1638.123

REGISTERED PROFESSIONAL ENGINEER
RICHARD N. YALE
NO. 040023
Exp. 12/31/01
CIVIL
STATE OF CALIFORNIA

The Keith Companies TKC
22650 Cactus Avenue, Suite 300 Moreno Valley, CA 92553-9024 (909) 653-0234

APPROVED BY: Richard N. Yale
RICHARD N. YALE R.C.E. NO. 40023
REGISTRATION EXP. 12/31/01
DATE: 6-6-01
CITY BUSINESS TAX CERTIFICATE NO. 033595, EXP. DATE 4/2/00

MARK	REVISIONS:	APPR.	DATE

DESIGNED BY DPH DRAWN BY MAG CHECKED BY TEB

CITY OF RIVERSIDE
PLANNING DEPARTMENT

PLANNING REVIEW
APPROVED BY _____ DATE _____

"AS - BUILT"
ROUGH GRADING PLAN
LOT "D" - TRACT 22551

HORIZ. SCALE: AS SHOWN VERT. SCALE:

ACCOUNT NO. 31586.005

SHEET 2 OF 3

David Neault Associates
landscape architecture
planning
golf course architecture
41877 enterprise circle north suite 120a temecula, california 92590
909 699.5071
fax: 909 676.2793
e.mail dna_asia@msn.com

THUNDERSKY PARK
8.7 ACRE ADDITION
GRADING PLAN

ORANGECREST COUNTRY
Communities Southwest
181 old springs road
anaheim, california 92808
1 714 279.6555 fax 1714 279.6556
contact: Mary Rauschenburg

north

date: 12-1-99 / 8-11-00
drawn: ret
checked: dsn
scale: 1"=30'-0"

sheet
G-2
of 3 sheets

DRAWING NUMBER
PLAN HOLD CORPORATION • IRVINE, CALIFORNIA
REGISTER BY NUMBER 0754R

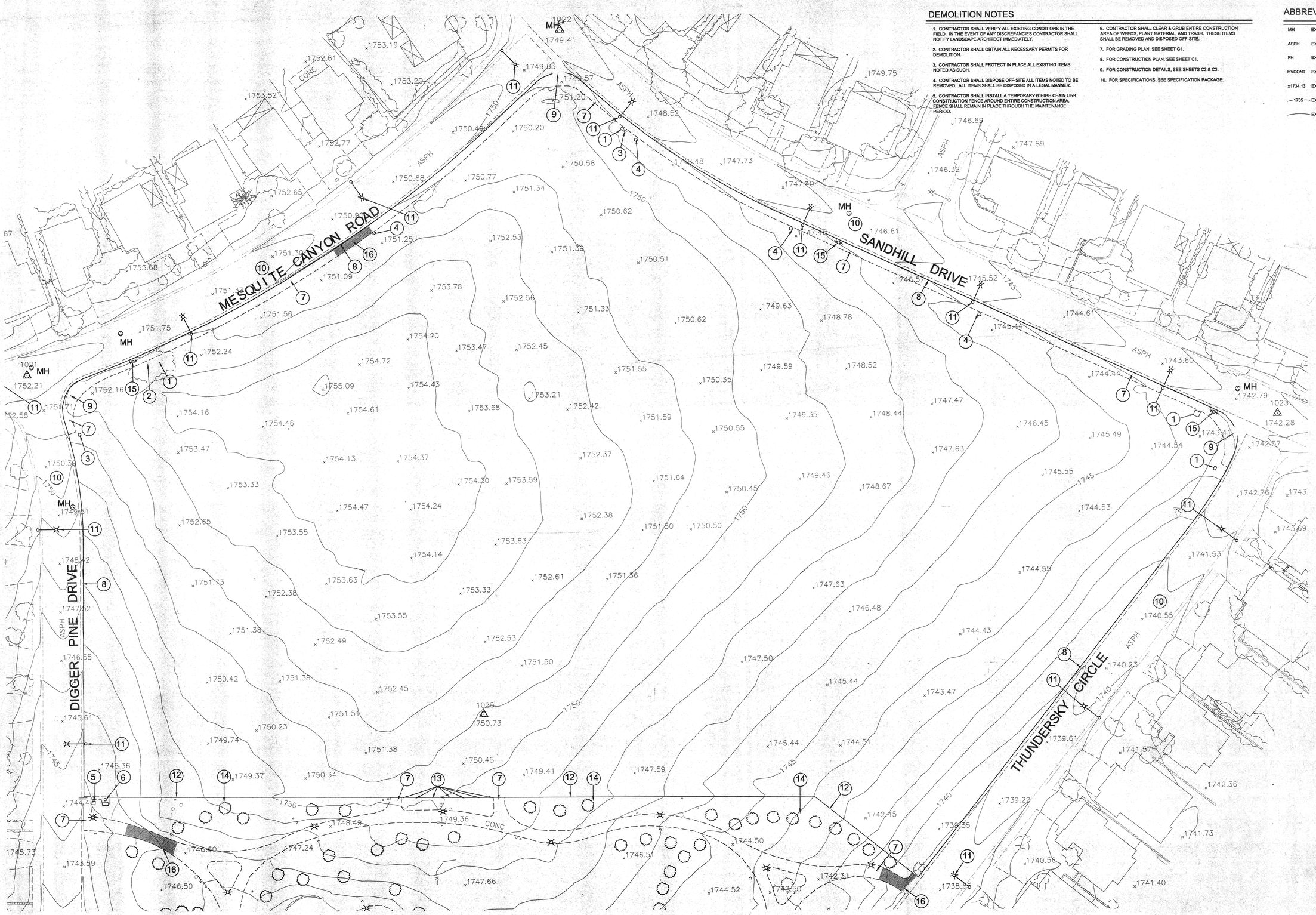

DEMOLITION NOTES

1. CONTRACTOR SHALL VERIFY ALL EXISTING CONDITIONS IN THE FIELD. IN THE EVENT OF ANY DISCREPANCIES CONTRACTOR SHALL NOTIFY LANDSCAPE ARCHITECT IMMEDIATELY.
2. CONTRACTOR SHALL OBTAIN ALL NECESSARY PERMITS FOR DEMOLITION.
3. CONTRACTOR SHALL PROTECT IN PLACE ALL EXISTING ITEMS NOTED AS SUCH.
4. CONTRACTOR SHALL DISPOSE OFF-SITE ALL ITEMS NOTED TO BE REMOVED. ALL ITEMS SHALL BE DISPOSED IN A LEGAL MANNER.
5. CONTRACTOR SHALL INSTALL A TEMPORARY 6' HIGH CHAIN LINK CONSTRUCTION FENCE AROUND ENTIRE CONSTRUCTION AREA. FENCE SHALL REMAIN IN PLACE THROUGH THE MAINTENANCE PERIOD.
6. CONTRACTOR SHALL CLEAR & GRUB ENTIRE CONSTRUCTION AREA OF WEEDS, PLANT MATERIAL, AND TRASH. THESE ITEMS SHALL BE REMOVED AND DISPOSED OFF-SITE.
7. FOR GRADING PLAN, SEE SHEET G1.
8. FOR CONSTRUCTION PLAN, SEE SHEET C1.
9. FOR CONSTRUCTION DETAILS, SEE SHEETS C2 & C3.
10. FOR SPECIFICATIONS, SEE SPECIFICATION PACKAGE.

ABBREVIATIONS

MH	EXISTING MANHOLE
ASPH	EXISTING ASPHALT STREET
FH	EXISTING FIREHYDRANT
HVCONT	EXISTING ?
x1734.13	EXISTING SPOT ELEVATION
—1735—	EXISTING 5' CONTOUR
	EXISTING 1' CONTOUR

LEGEND

1. EXISTING ELECTRICAL BOX/VAULT - PROTECT IN PLACE.
2. EXISTING WATER B.O. - PROTECT IN PLACE.
3. EXISTING GTE BOX - PROTECT IN PLACE.
4. EXISTING CABLE TV BOX - PROTECT IN PLACE.
5. EXISTING WATER METER - PROTECT IN PLACE.
6. EXISTING CONCRETE PAD W/ UTILITY BOXES - PROTECT IN PLACE.
7. EXISTING CONCRETE SIDEWALK - PROTECT IN PLACE.
8. EXISTING CONCRETE CURB & GUTTER - PROTECT IN PLACE.
9. EXISTING HANDICAP RAMP - PORTECT IN PLACE.
10. EXISTING A.C. STREET - PROTECT IN PLACE.
11. EXISTING STREET LIGHT - PROTECT IN PLACE.
12. EXISTING CONCRETE MOW CURB - REMOVE & DISPOSE OFF SITE.
13. EXISTING IRRIGATION VALVES - PROTECT IN PLACE.
14. EXISTING LANDSCAPE @ EXISTING PARK - PROTECT IN PLACE.
15. EXISTING FIREHYDRANT - PROTECT IN PLACE.
16. EXISTING SIDEWALK TO BE REMOVED AND REPLACED.

REGISTERED PROFESSIONAL LANDSCAPE ARCHITECT
DAVID B. NEAULT
STATE OF CALIFORNIA

P&R APPROVED
6.14.00 CE

David Neault Associates, Inc.
landscape architecture
planning
golf course architecture
41877 enterprise circle north
suite 202
temecula, california 92590
909 296.3430
fax: 909 296.3431
e.mail dnala@aol.com

THUNDERSKY PARK
8.7 ACRE ADDITION
EXISTING CONDITIONS/ DEMOLITION PLAN

ORANGECREST COUNTRY
Communities Southwest
181 old springs road
anaheim, california 92808
1-714 279.6555 fax 1714 279.6556
contact: Mary Rauschenburg

north

date:	5/5/2000
drawn:	ret
checked:	dsn
scale:	1"=30'-0"

sheet

D-1

of 1 sheets

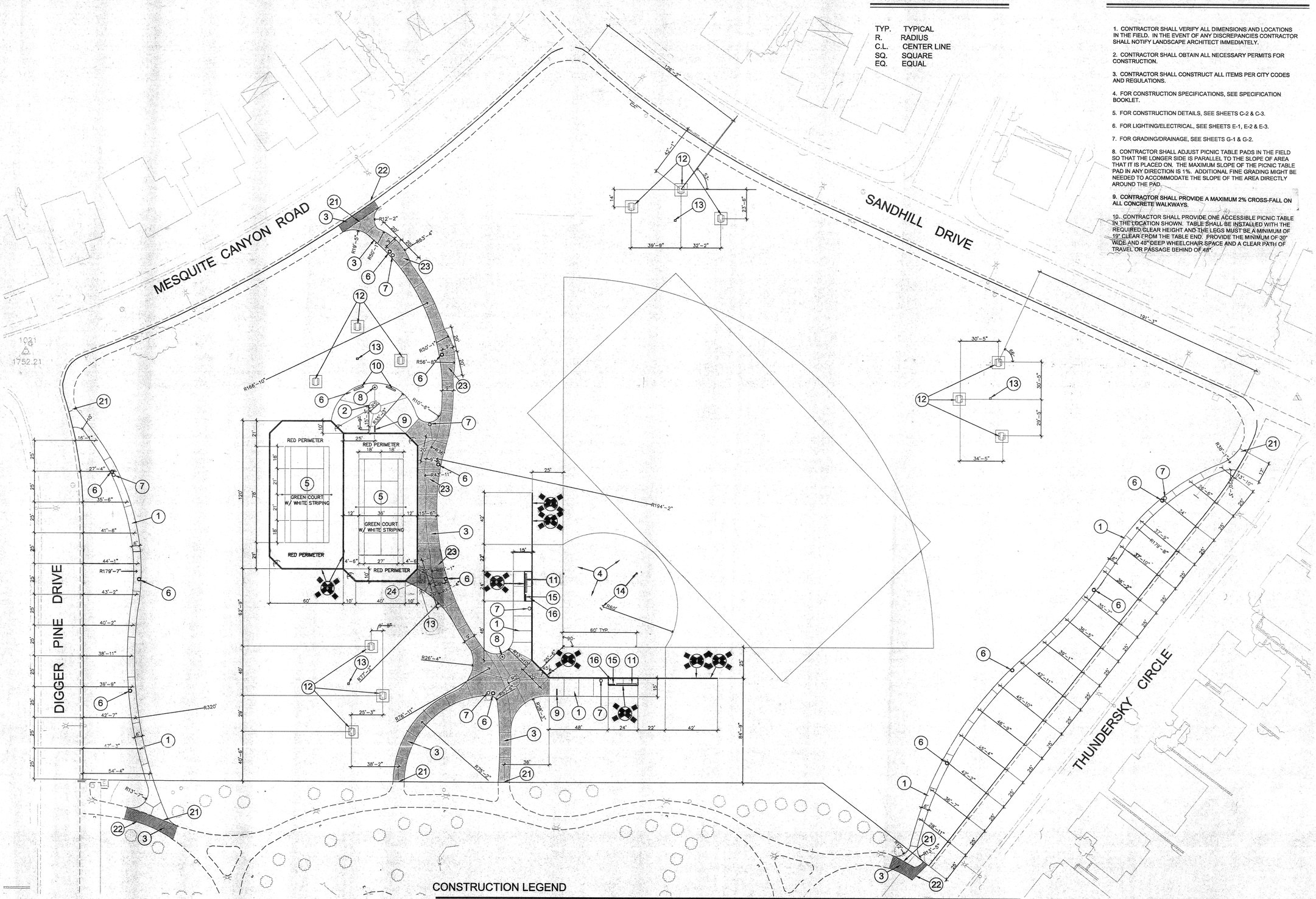

CONSTRUCTION ABBREV'S.

TYP. TYPICAL
R. RADIUS
C.L. CENTER LINE
SQ. SQUARE
EQ. EQUAL

CONSTRUCTION NOTES

1. CONTRACTOR SHALL VERIFY ALL DIMENSIONS AND LOCATIONS IN THE FIELD. IN THE EVENT OF ANY DISCREPANCIES CONTRACTOR SHALL NOTIFY LANDSCAPE ARCHITECT IMMEDIATELY.
2. CONTRACTOR SHALL OBTAIN ALL NECESSARY PERMITS FOR CONSTRUCTION.
3. CONTRACTOR SHALL CONSTRUCT ALL ITEMS PER CITY CODES AND REGULATIONS.
4. FOR CONSTRUCTION SPECIFICATIONS, SEE SPECIFICATION BOOKLET.
5. FOR CONSTRUCTION DETAILS, SEE SHEETS C-2 & C-3.
6. FOR LIGHTING/ELECTRICAL, SEE SHEETS E-1, E-2 & E-3.
7. FOR GRADING/DRAINAGE, SEE SHEETS G-1 & G-2.
8. CONTRACTOR SHALL ADJUST PICNIC TABLE PADS IN THE FIELD SO THAT THE LONGER SIDE IS PARALLEL TO THE SLOPE OF AREA THAT IT IS PLACED ON. THE MAXIMUM SLOPE OF THE PICNIC TABLE PAD IN ANY DIRECTION IS 1%. ADDITIONAL FINE GRADING MIGHT BE NEEDED TO ACCOMMODATE THE SLOPE OF THE AREA DIRECTLY AROUND THE PAD.
9. CONTRACTOR SHALL PROVIDE A MAXIMUM 2% CROSS-FALL ON ALL CONCRETE WALKWAYS.
10. CONTRACTOR SHALL PROVIDE ONE ACCESSIBLE PICNIC TABLE IN THE LOCATION SHOWN. TABLE SHALL BE INSTALLED WITH THE REQUIRED CLEAR HEIGHT AND THE LEGS MUST BE A MINIMUM OF 19" CLEAR FROM THE TABLE END. PROVIDE THE MINIMUM OF 30" WIDE AND 48" DEEP WHEELCHAIR SPACE AND A CLEAR PATH OF TRAVEL OR PASSAGE BEHIND OF 48".

CONSTRUCTION LEGEND

1. 4" THICK CONCRETE WALK — SEE DETAIL "A"
2. 4" THICK COLORED CONCRETE ACCENT PAVING — SEE DETAIL "A"
3. 6" THICK CONCRETE WALK FOR VEHICULAR USE — SEE DETAIL "A"
4. 2" THICK BRICK/CLAY MIX FOR BALLFIELD INFIELD
5. CONCRETE TENNIS COURT — SEE DETAIL "B, C & D"
6. WALKWAY LIGHT — SEE LIGHTING PLAN
7. TRASH RECEPTACLES — SEE DETAIL "E"
8. DRINKING FOUNTAIN — SEE DETAIL "F & G"
9. BIKE RACK — SEE DETAIL "H"
10. BENCH W/ BACK — SEE DETAIL "J"
11. BENCH WITH BACK — SEE DETAIL "I"
12. PICNIC TABLE — SEE CONST. NOTE "8" & DETAIL "K"
13. BBQ UNIT — SEE DETAIL "L"
14. BASEBALL BASES/EQUIPMENT — INSTALL PER MFG'S. SPECIFICATIONS
15. BASEBALL BATRACK — SEE DETAIL "M"
16. BASEBALL DUGOUT — SEE DETAIL "N"
17. 6' HIGH CHAIN LINK FENCE — SEE DETAIL "O" — THIS ITEM NOT A PART OF THIS SUBMITTAL — N.A.P.
18. 10' HIGH CHAIN LINK FENCE — SEE DETAIL "P" — THIS ITEM NOT A PART OF THIS SUBMITTAL — N.A.P.
19. 10' HIGH CHAIN LINK TENNIS COURT FENCE — SEE DETAIL "P" — THIS ITEM NOT A PART OF THIS SUBMITTAL — N.A.P.
20. 2' H.W. & 4' D. CONCRETE CURB AT BASE OF FENCE — SEE DETAIL "Q" — THIS ITEM NOT A PART OF THIS SUBMITTAL — N.A.P.
21. MEET & MATCH EXISTING CONCRETE WALK
22. EXISTING SIDEWALK TO BE REMOVED AND REPLACED.
23. FLARE WALK @ LIGHT POLES ALONG DRIVEABLE WALK ONLY — SEE DETAIL "R"
24. ACCESSABLE PICNIC TABLE — SEE NOTE 10 & DETAIL "K"

P&R APPROVED 6.14.00

David Neault Associates, Inc.
landscape architecture
planning
golf course architecture
41877 enterprise circle north suite 200 temecula, california 92590
909 296.3430
fax: 909 296.3431
e.mail dnaia@aol.com

THUNDERSKY PARK 8.7 ACRE ADDITION CONSTRUCTION PLAN

ORANGECREST COUNTRY

Communities Southwest
181 old springs road
anaheim, california 92808
1 714 279.6555 fax 1714 279.6556
contact: Mary Rauschenburg

north

date: 5/5/2000
drawn: ret
checked: dsn
scale: 1"=30'-0"
sheet C-1
of 3 sheets

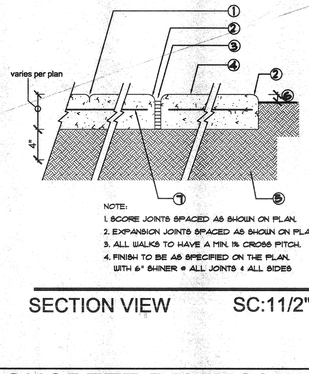

1. MIN. 1/2" DEEP SCORE JOINT @ 5' O.C. MAX
2. 1/2" MAX. RADIUS TROUELLED EDGES
3. 1/2" PREMOULDED EXPANSION JOINT @ 25' O.C. MAX.
4. CONCRETE SIDEWALK - NATURAL COLOR
5. COMPACTED SUBGRADE - 90% COMPACTION.
6. 1" IN TURF AREAS 2" IN SHRUB AREAS
7. 6X6X10/10 W.W.M. MIN. 2" CLEAR FROM SOIL. AS RECOMMENDED BY SOILS ENGINEER

NOTE:
1. SCORE JOINTS SPACED AS SHOWN ON PLAN.
2. EXPANSION JOINTS SPACED AS SHOWN ON PLAN.
3. ALL WALKS TO HAVE A MIN. 1% CROSS PITCH.
4. FINISH TO BE AS SPECIFIED ON THE PLAN. WITH 6" SHINER @ ALL JOINTS & ALL SIDES

SECTION VIEW SC:11/2"=1'

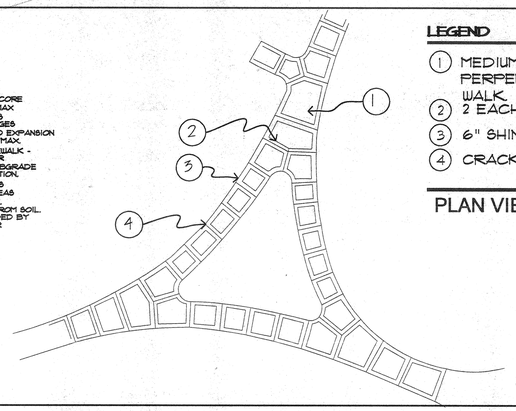

LEGEND

1. MEDIUM BROOM FINISH INTERIORS PERPENDICULAR TO DIRECTION OF WALK.
2. 2 EACH, 6" SHINERS.
3. 6" SHINER @ EDGES.
4. CRACK CONTROL JOINTS PER PLAN.

PLAN VIEW NTS

A CONCRETE PAVING/WALK

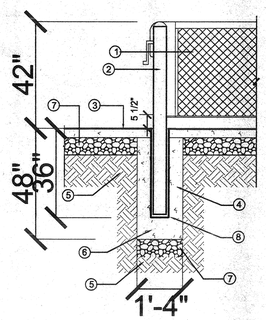

1. TENNIS NET - 3.5 MM NYLON TWINE.
2. 3" SQUARE, 11 GAUGE STEEL POSTS W/ INTERNAL WIND-UP MECHANISM.
3. CONCRETE PAVING W/ ACRYLIC SPORT SURFACING. SEE PLAN FOR COLORS AND STRIPING
4. GALVANIZED GROUND SLEEVE.
5. 90% COMPACTED SUBGRADE.
6. CONCRETE FOOTING.
7. AGGREGATE SUB BASE - CLASS II 95% COMPACTION.
8. 5/8" MIN. DIAMETER STEEL PIN

D TENNIS COURT SC:1/2"=1'-0"

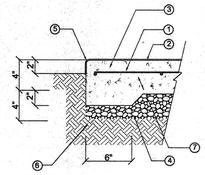

1. #5 REBAR 40" O.C. BOTH WAYS 2" MIN. CLEAR.
2. CONCRETE PAVING W/ACRYLIC SPORT COURT SURFACING. SEE PLANS FOR COLORS AND STRIPING.
3. CONC. PAVING.
4. AGGREGATE SUB BASE- CLASS II 95% COMPACTION.
5. 1/2"RADIUS TOOLED EDGE.
6. COMPACTED SUBGRADE.
7. THICKENED EDGE @ ALL PERIMETERS AND EXP. JOINT.

B TENNIS COURT SC:11/2"=1'

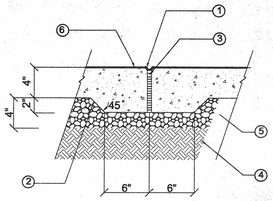

1. 1/4" RADIUS TOOLED EDGE.
2. THICKENED EDGE @ EXP. JOINT AND ALL PERIMETERS
3. 1/2" PREMOULDED EXP. JOINT W/ MASTIC CAP (COLOR TO MATCH CONCRETE).
4. COMPACTED SUBGRADE - 90%.
5. AGGREGATE SUBBASE- CLASS II/95% COMPACTION.
6. CONCRETE PAVING W/ACRYLIC SPORT SURFACING. SEE PLAN FOR FOR COLORS AND STRIPING.

C TENNIS COURT SC:11/2"=1'

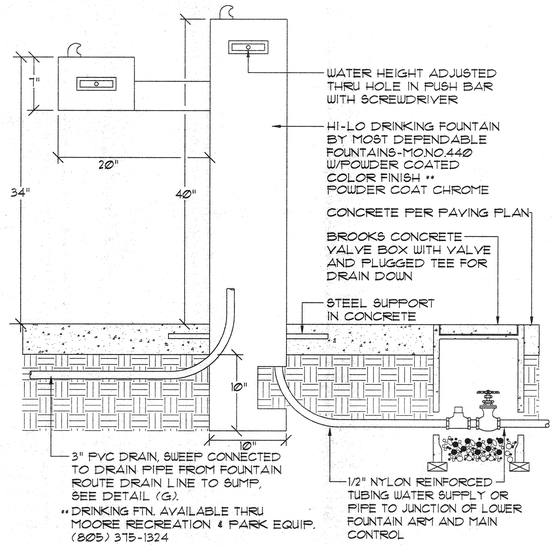

WATER HEIGHT ADJUSTED THRU HOLE IN PUSH BAR WITH SCREWDRIVER

HI-LO DRINKING FOUNTAIN BY MOST DEPENDABLE FOUNTAINS-MO.NO.440 W/POWDER COATED COLOR FINISH ** POWDER COAT CHROME

CONCRETE PER PAVING PLAN

BROOKS CONCRETE VALVE BOX WITH VALVE AND PLUGGED TEE FOR DRAIN DOWN

STEEL SUPPORT IN CONCRETE

3" PVC DRAIN, SWEEP CONNECTED TO DRAIN PIPE FROM FOUNTAIN ROUTE DRAIN LINE TO SUMP, SEE DETAIL (G).

** DRINKING FTN. AVAILABLE THRU MOORE RECREATION & PARK EQUIP. (805) 375-1324

1/2" NYLON REINFORCED TUBING WATER SUPPLY OR PIPE TO JUNCTION OF LOWER FOUNTAIN ARM AND MAIN CONTROL

E DRINKING FOUNTAIN SC:11/2"=1'

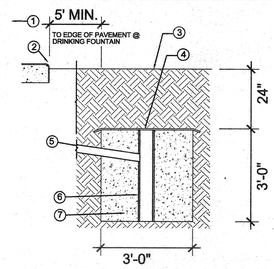

1. DRINKING FOUNTAIN SEE DETAIL "F" THIS SHEET.
2. EDGE OF PAVEMENT
3. FINISH GRADE.
4. TREVIRA SPUN BOUND FABRIC.
5. 3"DIAMETER SCH. 40 PVC DRAIN PIPE. SLOPE 2 % TO SUMP
6. 4" NON-METALLIC PERFORATED DRAIN PIPE.
7. 3/4" DIAMETER DRAIN ROCK SUMP, 1 CU.Y.D.

G DRINKING FOUNTAIN SC:1/2"=1'

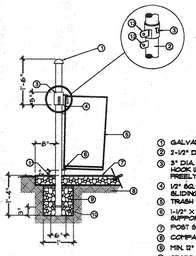

1. GALVANIZED METAL CAP WELDED TO TOP OF POST
2. 2-1/2" DIA. X 5' LONG SCH. 40 GALV. STEEL POST.
3. 3" DIA. X 5 LBS/LIN. FT. SCH. 40 GALV. STEEL COLLAR W/ DIA. 5" LONG SHAPED GALV. STEEL BAR STOCK HOOK WELDED TO TOP COLLAR PROVIDE 1" GAP BETWEN HOOK & COLLAR TO SLIDE FREELY ON POST.
4. 1/2" SQ. X 2" LONG BAR STOCK WELDED VERTICALLY TO POST 18" FROM TOP TO ACT. AS STOP FOR SLIDING COLLAR.
5. TRASH CONTAINER PER SPECS.
6. 1-1/2" X 1-1/2" LENGTH ANGLE IRON WELDED HORIZONTALLY TO POST 18" FROM BOTTOM SUPPORT ANGLE IRON 12" 1" X 3" X 1/4" THICK STEEL WELDED VERTICALLY TO THE PIPE.
7. POST SHALL BE SET PLUMB IN CONC. SLAB OR SIDEWALK PER PLAN.
8. COMPACTED SUBGRADE.
9. MIN. 5" DIA. X 12" DEEP CONC. FOOTING.
10. STABILIZING CROSSBAR: MIN. 1/2" X 6" LENGTH REBAR TO BE FILLET WELDED TO POST. DRILL POST TO ACCEPT CROSSBAR.
11. FINISH GRADE.
12. POST LOCK EXTENSION: 1/4" THK. X 2" WIDTH, LENGTH AS REQUIRED, BAR STOCK, RADIUS END. 4 PUNCH 1/2" HOLE IN CENTER TO ALLOW FOR PAD LOCK WELDED VERTICALLY TO POST TO ALIGN W/ COLLAR OPENING WHEN COLLAR IS DOWN IN POSITION. PUNCH HOLE SHALL ALIGN W/ COLLAR LOCK EXTENSION HOLE TO ALLOW LOCKING IN DOWN POSITION.
13. COLLAR LOCK EXTENSION: 1/4" THK. X 2" LONG BAR STOCK RADIUS END. 4 PUNCH 1/2" HOLE IN CENTER TO ALIGN W/ POST LOCK EXTENSION WHEN IN DOWN POSITION WELD VERTICALLY TO COLLAR. CUT OUT SECTION TO ALLOW COLLAR TO SLIDE DOWN OVER POST LOCK EXTENSION.

NOTE:
NOTE DIP GALVANIZE ALL PARTS FABRICATION ANY PARTS THAT MUST BE WELDED AFTER DIPPING SHALL BE PAINTED WITH TWO COATS OF GALVICON OR EQUAL AFTER FABRICATION.

F TRASH RECEPTACLE SC:1/2"=1'-0"

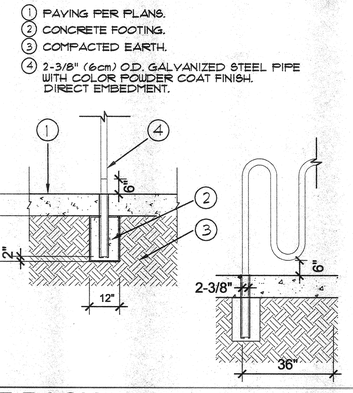

1. PAVING PER PLANS.
2. CONCRETE FOOTING.
3. COMPACTED EARTH.
4. 2-3/8" (6cm) OD. GALVANIZED STEEL PIPE WITH COLOR POWDER COAT FINISH. DIRECT EMBEDMENT.

H BIKE RACK SC:1/2"=1'-0"

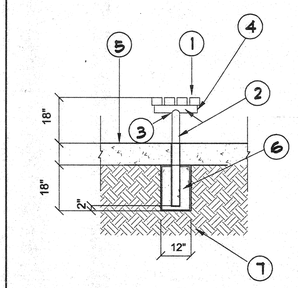

1. 2X4 8'-0" LONG (4 PER BENCH) KILN DRIED YELLOW PINE SEAT PAINT STAIN PER SPECS. DRILL HOLES IN WOOD TO MATCH HOLES IN FRAME WITH 2 GALV. 1/2 " DIAMETER CARRIAGE BOLTS AT EACH FRAME. PEEN ENDS ONCE ATTACHED 2X4'S SHALL BE CONTINUOUS 1 PIECE WITHOUT JOINTS. (SEE PLAN)
2. GALVANIZED STEEL PIPE PER SPECS. 3 PER BENCH. PRE-DRILL HOLES TO ACCEPT 1/2" DIAMETER CARRIAGE BOLTS WHICH SADDLE AT TOP TO ACCEPT HORIZONTAL BENCH FRAME.
3. CONTINUOUS FILLET WELD VERTICAL POST TO HORIZONTAL BENCH FRAME
4. CONTINUOUS FILLET WELD CAP ON EACH END OF HORIZONTAL BENCH FRAME. GRIND WELDS SMOOTH FRIOR TO HOT DIP GALVANIZING.
5. PAVING PER PLANS.
6. CONCRETE FOOTING.
7. 90% COMPACTED SUBGRADE.

NOTE:
UPON COMPLETION OF FABRICATION OF FRAME, GRIND ALL WELDS SMOOTH AND HOT DIP GALVANIZE ENTIRE FRAME.

I BENCH W/OUT BACK SC:1/2"=1'-0"

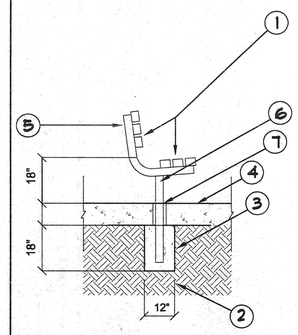

1. 2X4 8'-0" LONG (6 PER BENCH DRIED YELLOW PINE SEAT PAINT PER SPECS. DRILL HOLES IN WOOD TO MATCH HOLES IN FRAME. WITH 2 GALV. 1/2 " DIAMETER CARRIAGE BOLTS. PEEN ENDS ONCE ATTACHED 2X4'S SHALL BE CONTINUOUS PIECE WITHOUT JOINTS.
2. 90% COMPACTED SUBGRADE
3. CONCRETE FOOTING.
4. PAVING PER PLANS.
5. BENCH FRAME PER SPECS. SET 1 EACH 12" IN FROM END AND ONE AT CENTER.
6. 2 3/8" ϕ X 12 GA. GALV. TUBING.
7. EXPANSION JOINT.

J BENCH W/ BACK SC:1/2"=1'-0"

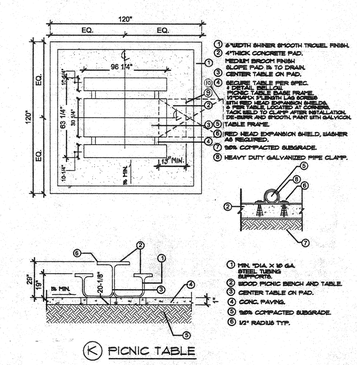

1. 6" WIDTH SHINER SMOOTH TROWEL FINISH.
2. 4" THICK CONCRETE PAD. MEDIUM BROOM FINISH SLOPE PAD 1% TO DRAIN.
3. CENTER TABLE ON PAD.
4. SECURE TABLE PER SPEC. 1 EACH TABLE PER FRAME. WOOD PLANK (AS SHOWN) SHALL BE MIN. 1" THICK. EXPANSION SHIELD, 1/2" DIA. HOLE IN CONC. FOR SHIELD TO BE DRILLED. FOLLOW INSTALLATION DIRECTIONS AND SPECIFICATIONS. PAINT WITH GALVICON. (TABLE FRAME)
5. RED HEAD EXPANSION SHIELD, WASHER AS REQUIRED.
6. 90% COMPACTED SUBGRADE.
7. HEAVY DUTY GALVANIZED PIPE CLAMP.
8. 1/2" MIN. TABLE OVERHANG CLEAR OF LEGS FOR WHEELCHAIR ACCESS TABLE ONLY
9. 3'-4" 48" CLEAR SPACE OF NO OBSTRUCTION FOR WHEELCHAIR ACCESS TABLE ONLY

1. MIN. 1"DIA. X 16 GA. STEEL TUBING SUPPORTS.
2. REDO PICNIC BENCH AND TABLE.
3. CENTER TABLE ON PAD.
4. CONC. PAVING.
5. 90% COMPACTED SUBGRADE.
6. 1/2" RADIUS TYP.

K PICNIC TABLE

K PICNIC TABLE SC:1/4"=1'-0"

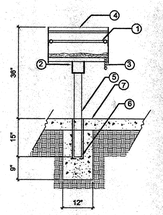

1. ASH PAN REPLACEMENT.
2. 360° ROTATION FOR PROPER DRAFT CONTROL
3. CHAINED, THREE-POSITION ADJUSTABLE ASH PAN.
4. HEAVY-DUTY, RUST-RESISTANT GALV. STEEL.
5. 3 1/2" OD. GALV. STEEL PIPE PEDESTAL. CENTER ON CONCRETE PAD
6. GALV. IRON PIPE SLEEVE PACK W/EXPANSIVE GROUT; COLOR TO MATCH CONCRETE FOOTING.
7. 36"X 36" CONCRETE PAD.

GROUND SPACE
36"X 36"

L BBQ UNIT SC:1/2"=1'-0"

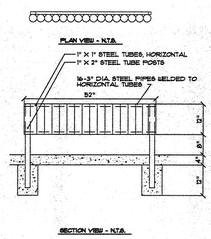

NOTE:
BAT RACK BY LA STEELCRAFT PRODUCTS MODEL BR-5 HOT DIP GALVANIZED UNIT AFTER WELDING

M BATRACK SC:1/2"=1'-0"

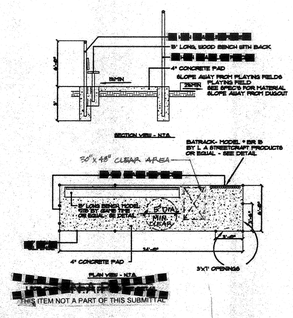

THIS ITEM NOT A PART OF THIS SUBMITTAL

N DUGOUT SC:1/4"=1'-0"

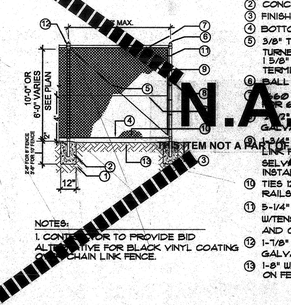

N.A.P.

THIS ITEM NOT A PART OF THIS SUBMITTAL

1. 90% COMPACTED SUBGRADE.
2. CONCRETE FOOTING (TYPICAL)
3. FINISH GRADE.
4. BOTTOM RAIL(1.66@
5. 3/8" TRUSS ROD
TURNBUCKLE
TERMINAL POST USE 1 5/8" OD GALVANIZED MID RAIL AT X 10" TERMINAL POST.
6. RAIL: OD
7. 1.66@ OD TOP, MID, & BOTTOM RAIL, 1.66@ OD
FOR 6', 3 1/2" OD 7.58 LBS/FT. FOR 10' GALVANIZED CORNER AND END POST.
8. 9'-0" HEAVY GALVANIZED CHAIN LINK FABRIC 9 GAUGE KNUCKLED SELVAGE TOP AND BOTTOM. INSTALL ON ALL FIELD SIDE OF FENCE
10. TIES 12" O.C. TOP AND BOTTOM RAILS- 9 GA.
11. 5-1/4" X 3/4" TENSION BANDS W/TENSION BAR AT END AND CORNERS.
12. 1-7/8" OD FOR 6', 2 7/8" OD FOR 10' GALVANIZED LINE POST.
13. 1-8" W. CONTINUOUS CONCRETE CURB CENTERED ON FENCE. EXTEND 8" BEYOND END POST.

NOTES:
1. CONTRACTOR TO PROVIDE BID ALTERNATIVE FOR BLACK VINYL COATING ON CHAIN LINK FENCE.

O CHAIN LINK FENCE SC:1/4"=1'-0"

David Neault Associates, Inc.
landscape architecture
planning
golf course architecture
41877 enterprise circle north suite 200
temecula, california 92590
909 296.3430
fax: 909 296.3431
e.mail dnala@aol.com

THUNDERSKY PARK
8.7 ACRE ADDITION
CONSTRUCTION DETAILS

ORANGECREST COUNTRY
Communities Southwest
181 old springs road
anaheim, california 92808
1 714 279.6555 fax 1714 279.6556
contact: Mary Rauschenburg

REGISTERED PROFESSIONAL LANDSCAPE ARCHITECT
David S. Neault
No. 2884
Exp.06-30-02
STATE OF CALIFORNIA

date:	5/5/2000
drawn:	ret
checked:	dsn
scale:	N.T.S.
sheet	

C-2

of 3 sheets

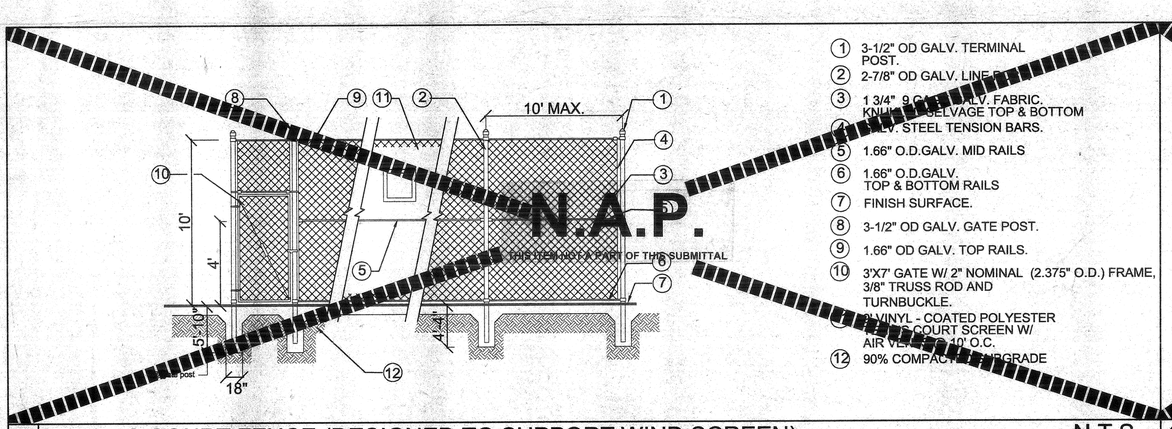

1. 3-1/2" OD GALV. TERMINAL POST.
2. 2-7/8" OD GALV. LINE POST.
3. 1 3/4" 9 GAGE GALV. FABRIC. KNUCKLED SELVAGE TOP & BOTTOM
4. GALV. STEEL TENSION BARS.
5. 1.66" O.D.GALV. MID RAILS
6. 1.66" O.D.GALV. TOP & BOTTOM RAILS
7. FINISH SURFACE.
8. 3-1/2" OD GALV. GATE POST.
9. 1.66" OD GALV. TOP RAILS.
10. 3'X7' GATE W/ 2" NOMINAL (2.375" O.D.) FRAME, 3/8" TRUSS ROD AND TURNBUCKLE.
11. 9' VINYL - COATED POLYESTER TENNIS COURT SCREEN W/ AIR VENTS @ 10' O.C.
12. 90% COMPACTED SUBGRADE

P | TENNIS COURT FENCE (DESIGNED TO SUPPORT WIND SCREEN) N.T.S.

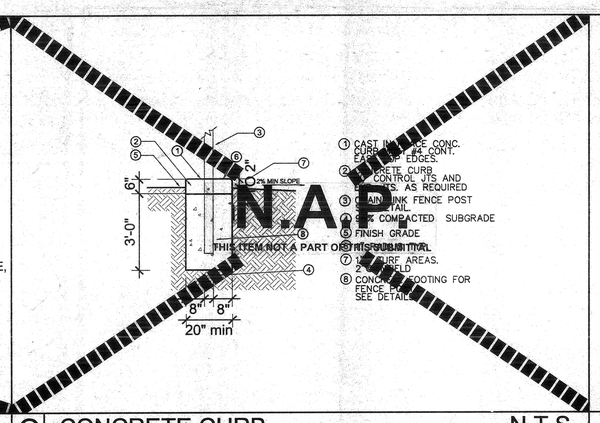

1. CAST IN PLACE CONC. CURB WITH #4 CONT. EARTH TOP EDGES.
2. CONCRETE CURB CONTROL JTS AND EXPANS. AS REQUIRED
3. CHAIN LINK FENCE POST TYPICAL.
4. 90% COMPACTED SUBGRADE
5. FINISH GRADE
6. FINISH SURFACE.
7. 1" CURB AREAS. 2" OPEN FIELD
8. CONCRETE FOOTING FOR FENCE POST SEE DETAILS

Q | CONCRETE CURB N.T.S.

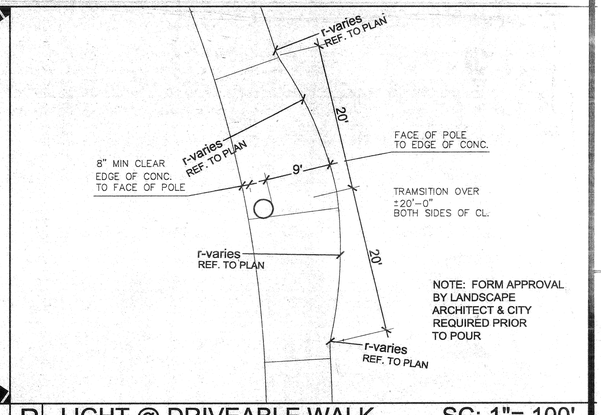

NOTE: FORM APPROVAL BY LANDSCAPE ARCHITECT & CITY REQUIRED PRIOR TO POUR

R | LIGHT @ DRIVEABLE WALK SC: 1"= 100'

P&R APPROVED

David Neault Associates, Inc.
landscape architecture planning golf course architecture
41877 enterprise circle north suite 200 temecula california 92590
909 296 3430
fax 909 296 3431
e.mail dnaia@aol.com

THUNDERSKY PARK
8.7 ACRE ADDITION
CONSTRUCTION DETAILS

ORANGECREST COUNTRY

Communities Southwest
181 old springs road
anaheim, california 92808
1 714 279.6555 fax 1714 279.6556
contact: Mary Rauschenburg

David S. Neault
No. 2884
Exp.06-31-00
STATE OF CALIFORNIA

date: 5/5/2000
drawn: ret
checked: dsn
scale: N.T.S.
sheet

C-3

of 3 sheets

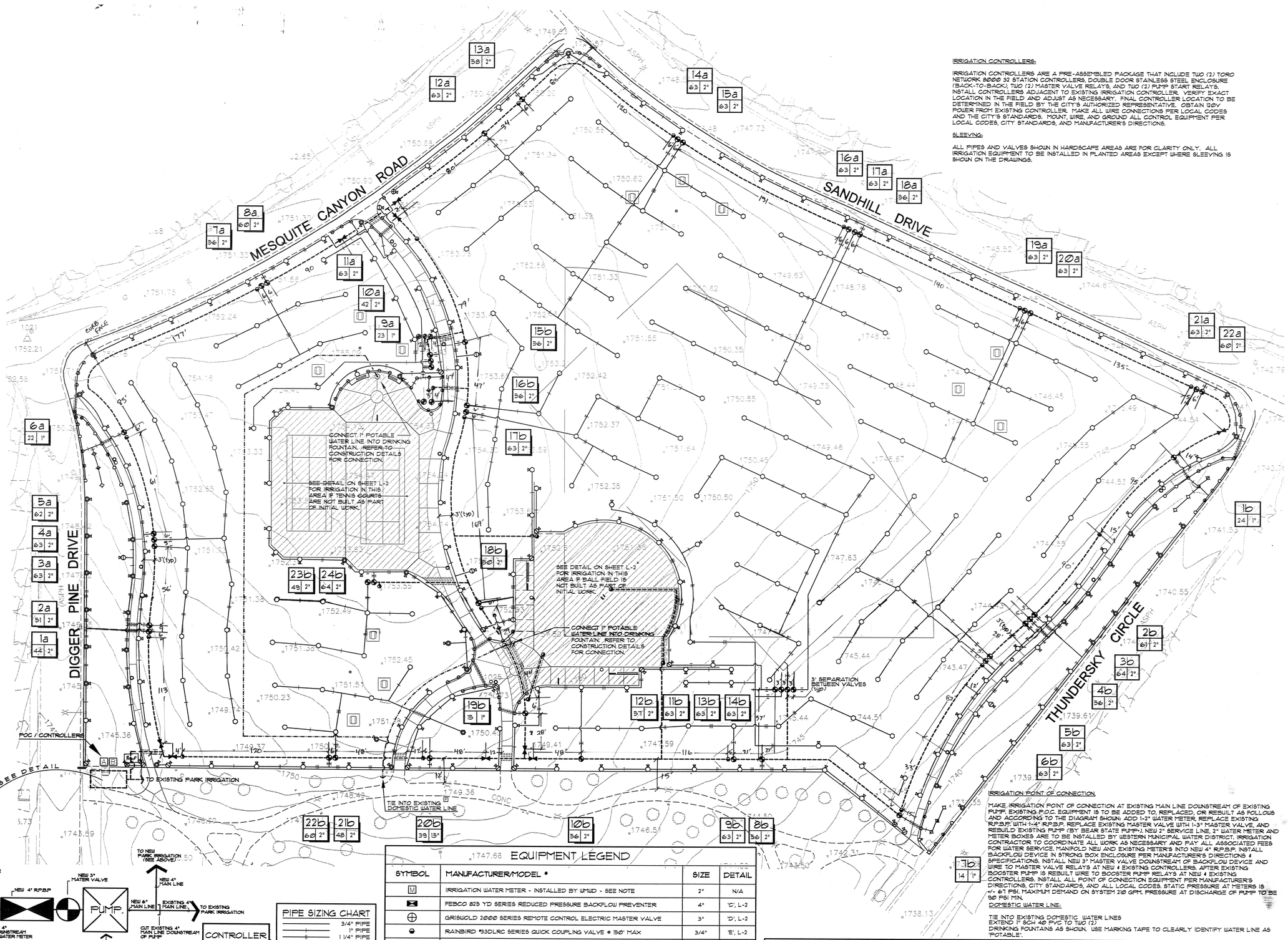

IRRIGATION CONTROLLERS:

IRRIGATION CONTROLLERS ARE A PRE-ASSEMBLED PACKAGE THAT INCLUDE TWO (2) TORO NETWORK 8000 32 STATION CONTROLLERS, DOUBLE DOOR STAINLESS STEEL ENCLOSURE (BACK-TO-BACK), TWO (2) MASTER VALVE RELAYS, AND TWO (2) PUMP START RELAYS. INSTALL CONTROLLERS ADJACENT TO EXISTING IRRIGATION CONTROLLER. VERIFY EXACT LOCATION IN THE FIELD AND ADJUST AS NECESSARY. FINAL CONTROLLER LOCATION TO BE DETERMINED IN THE FIELD BY THE CITY'S AUTHORIZED REPRESENTATIVE. OBTAIN 120V POWER FROM EXISTING CONTROLLER. MAKE ALL WIRE CONNECTIONS PER LOCAL CODES AND THE CITY'S STANDARDS. MOUNT, WIRE, AND GROUND ALL CONTROL EQUIPMENT PER LOCAL CODES, CITY STANDARDS, AND MANUFACTURER'S DIRECTIONS.

SLEEVING:

ALL PIPES AND VALVES SHOWN IN HARDSCAPE AREAS ARE FOR CLARITY ONLY. ALL IRRIGATION EQUIPMENT TO BE INSTALLED IN PLANTED AREAS EXCEPT WHERE SLEEVING IS SHOWN ON THE DRAWINGS.

IRRIGATION POINT OF CONNECTION

MAKE IRRIGATION POINT OF CONNECTION AT EXISTING MAIN LINE DOWNSTREAM OF EXISTING PUMP. EXISTING P.O.C. EQUIPMENT IS TO BE ADDED TO, REPLACED, OR REBUILT AS FOLLOWS AND ACCORDING TO THE DIAGRAM SHOWN. ADD 1-2" WATER METER, REPLACE EXISTING R.P.B.P. WITH 1-4" R.P.B.P., REPLACE EXISTING MASTER VALVE WITH 1-3" MASTER VALVE, AND REBUILD EXISTING PUMP (BY BEAR STATE PUMP). NEW 2" SERVICE LINE, 2" WATER METER AND METER BOXES ARE TO BE INSTALLED BY WESTERN MUNICIPAL WATER DISTRICT. IRRIGATION CONTRACTOR TO COORDINATE ALL WORK AS NECESSARY AND PAY ALL ASSOCIATED FEES FOR WATER SERVICE. MANIFOLD NEW AND EXISTING METER'S INTO NEW 4" R.P.B.P. INSTALL BACKFLOW DEVICE IN STRONG BOX ENCLOSURE PER MANUFACTURER'S DIRECTIONS & SPECIFICATIONS. INSTALL NEW 3" MASTER VALVE DOWNSTREAM OF BACKFLOW DEVICE AND WIRE TO MASTER VALVE RELAYS AT NEW & EXISTING CONTROLLERS. AFTER EXISTING BOOSTER PUMP IS REBUILT WIRE TO BOOSTER PUMP RELAYS AT NEW & EXISTING CONTROLLERS. INSTALL ALL POINT OF CONNECTION EQUIPMENT PER MANUFACTURER'S DIRECTIONS, CITY STANDARDS, AND ALL LOCAL CODES. STATIC PRESSURE AT METERS IS +/- 67 PSI. MAXIMUM DEMAND ON SYSTEM 210 GPM. PRESSURE AT DISCHARGE OF PUMP TO BE 50 PSI MIN.

DOMESTIC WATER LINE:

TIE INTO EXISTING DOMESTIC WATER LINES EXTEND 1" SCH 40 PVC TO TWO (2) DRINKING FOUNTAINS AS SHOWN. USE MARKING TAPE TO CLEARLY IDENTIFY WATER LINE AS 'POTABLE'.

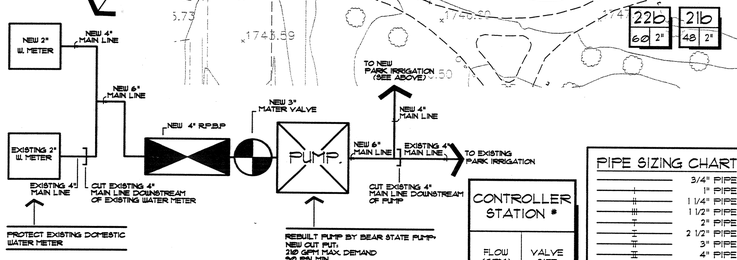

EQUIPMENT LEGEND

SYMBOL	MANUFACTURER/MODEL *	SIZE	DETAIL
M	IRRIGATION WATER METER - INSTALLED BY WMWD - SEE NOTE	2"	N/A
	FEBCO 825 YD SERIES REDUCED PRESSURE BACKFLOW PREVENTER	4"	'C', L-2
	GRISWOLD 2000 SERIES REMOTE CONTROL ELECTRIC MASTER VALVE	3"	'D', L-2
	RAINBIRD #33DLRC SERIES QUICK COUPLING VALVE @ 150' MAX	3/4"	'E', L-2
	NIBCO T-585 SERIES BALL VALVE - 2" AND SMALLER - OR EQUAL	UP TO 2"	'F', L-2
	NIBCO T-113 SERIES GATE VALVE - LARGER THAN 2" - OR EQUAL	3" AND UP	'G', L-2
	GRISWOLD 2000 SERIES REMOTE CONTROL ELECTRIC VALVE	PLAN SIZE	'H', L-2
A B	TORO NETWORK 8000W ABANDON EX PHONE LINK CONCENTRATOR PROVIDE NEW TORO "PHONE MODEM KIT" # 995.68 & "UNIVERSAL MODEM" # 88.7110 (VERIFY PART #'S)	32 STA.	'I', L-2
NOT SHOWN	UF RATED CONTROL WIRE - INSTALL WITH MAINLINE WHERE POSSIBLE 12 GA COMMON SEPARATE COLOR EACH CONTROLLER/ PROVIDE SPARE EACH CONTROLLER	14 GA	'J', L-2
	CLASS 315 PVC IRRIGATION MAINLINE - 3" UNLESS OTHERWISE NOTED	3"	'K', L-2
	CLASS 200 PVC NON-PRESSURE LATERAL LINE	PLAN SIZE	'K', L-2
	SCH 40 PVC IRRIGATION PIPE / WIRE SLEEVE	PLAN SIZE	'L', L-2
	SCH 40 PVC POTABLE WATER LINE - MARK WITH TAPE	1"	'K', L-2

* CONTACT TOM LANG @ BEAR STATE PUMP (800) 350-1660/ (909) 923-9812

SPRINKLER LEGEND

SYMBOL	MANUFACTURER/MODEL *	NOZZLE	RAD.	PSI	FLOW (GPM) Q	T	H	F			DETAIL
TURF POP-UP SPRAY HEADS											
	TORO 570Z-4P-8-PC-COM	Q/T/H/F	7'-8'	30	.22	.29	.44	.88			'A', L-2
	TORO 570Z-4P-10-PC-COM	Q/T/H/F	9'-10'	30	.33	.44	.66	1.3			'A', L-2
	TORO 570Z-4P-12-PC-COM	Q/T/H/F	11'-12'	30	.48	.64	.96	1.9			'A', L-2
	TORO 570Z-4P-15-PC-COM	Q/T/H/F	13'-15'	30	.75	1.0	1.5	3.0			'A', L-2
TURF POP-UP ROTOR HEADS											
	TORO 8700C-PC-30/45-SA	#3.0 / #4.5	35'-37'	40	3.12 / 3.71						'A', L-2
	TORO 8700C-PC-60/75-SA	#6.0 / #7.5	35'-37'	40	5.50 / 6.94						'A', L-2
	TORO 8700C-FC-60/75-SA	#6.0 / #7.5	35'-37'	40	5.50 / 6.94						'A', L-2

PIPE SIZING CHART

3/4" PIPE
1" PIPE
1 1/4" PIPE
1 1/2" PIPE
2" PIPE
2 1/2" PIPE
3" PIPE
4" PIPE
6" PIPE
8" PIPE

CONTROLLER STATION *

FLOW (GPM)	VALVE SIZE

Underground Service Alert
Call: TOLL FREE
1-800 227-2600
TWO WORKING DAYS BEFORE YOU DIG

SCH 40 PVC SLEEVING CHART

1 1/4" SLEEVE	1-4 WIRES	1/2" PIPE
1 1/2" SLEEVE	5-10 WIRES	3/4" PIPE
2" SLEEVE	11-20 WIRES	1" PIPE
2 1/2" SLEEVE	21-30 WIRES	1 1/4" PIPE
3" SLEEVE	31-40 WIRES	1 1/2" PIPE
4" SLEEVE	41-60 WIRES	2" PIPE
6" SLEEVE	61-99 WIRES	2 1/2"/3" PIPE
8" SLEEVE	100+ WIRES	4" PIPE
10" SLEEVE	N/A	6" PIPE

David Neault Associates, Inc.
landscape architecture
planning
golf course architecture
41877 enterprise circle north suite 200
temecula, california 92590
909 296.3430
fac 909 296.3431
e.mail dneale@aol.com

THUNDERSKY PARK
8.7 ACRE ADDITION
IRRIGATION PLAN

ORANGECREST COUNTRY

Communities Southwest
181 old springs road
anaheim, california 92808
1 714 279.6555 fax 1714 279.6556
contact: Mary Rauschenburg

north

date:	5/5/2000
drawn:	fhd
checked:	dsn
scale:	1" - 30'-0"

sheet

I-1

of 2 sheets

DRAWING NUMBER

DRAWING NUMBER

DRAWING NUMBER

DRAWING NUMBER

DRAWING NUMBER

DRAWING NUMBER

PLAN NO. 1 - PRELIMINARY
PLAN NO. 2 - PRELIMINARY
PLAN NO. 3 - PRELIMINARY
PLAN NO. 4 - PRELIMINARY
PLAN NO. 5 - PRELIMINARY
PLAN NO. 6 - PRELIMINARY

PLAN NO. 1 - CONSTRUCTION DOCUMENTS
PLAN NO. 2 - CONSTRUCTION DOCUMENTS
PLAN NO. 3 - CONSTRUCTION DOCUMENTS
PLAN NO. 4 - CONSTRUCTION DOCUMENTS
PLAN NO. 5 - CONSTRUCTION DOCUMENTS
PLAN NO. 6 - CONSTRUCTION DOCUMENTS

PLAN NO. 1 - AS BUILT
PLAN NO. 2 - AS BUILT
PLAN NO. 3 - AS BUILT
PLAN NO. 4 - AS BUILT
PLAN NO. 5 - AS BUILT
PLAN NO. 6 - AS BUILT

PLAN NO. 1 - FINAL
PLAN NO. 2 - FINAL
PLAN NO. 3 - FINAL
PLAN NO. 4 - FINAL
PLAN NO. 5 - FINAL
PLAN NO. 6 - FINAL

PLAN NO. 1 - CONTROL DOCUMENT
PLAN NO. 2 - CONTROL DOCUMENT
PLAN NO. 3 - CONTROL DOCUMENT
PLAN NO. 4 - CONTROL DOCUMENT
PLAN NO. 5 - CONTROL DOCUMENT
PLAN NO. 6 - CONTROL DOCUMENT

PLAN NO. 1 - FINAL ORIGINAL
PLAN NO. 2 - FINAL ORIGINAL
PLAN NO. 3 - FINAL ORIGINAL
PLAN NO. 4 - FINAL ORIGINAL
PLAN NO. 5 - FINAL ORIGINAL
PLAN NO. 6 - FINAL ORIGINAL

PLAN NO. 1 - FINAL CONTROL DOCUMENT
PLAN NO. 2 - FINAL CONTROL DOCUMENT
PLAN NO. 3 - FINAL CONTROL DOCUMENT
PLAN NO. 4 - FINAL CONTROL DOCUMENT
PLAN NO. 5 - FINAL CONTROL DOCUMENT
PLAN NO. 6 - FINAL CONTROL DOCUMENT

PLAN NO. 1 - FINAL ORIGINAL
PLAN NO. 2 - FINAL ORIGINAL
PLAN NO. 3 - FINAL ORIGINAL
PLAN NO. 4 - FINAL ORIGINAL
PLAN NO. 5 - FINAL ORIGINAL
PLAN NO. 6 - FINAL ORIGINAL

PLAN NO. 1 - AS BUILT
PLAN NO. 2 - AS BUILT
PLAN NO. 3 - AS BUILT
PLAN NO. 4 - AS BUILT
PLAN NO. 5 - AS BUILT
PLAN NO. 6 - AS BUILT

PLAN NO. 1 - CONTROL DOCUMENT
PLAN NO. 2 - CONTROL DOCUMENT
PLAN NO. 3 - CONTROL DOCUMENT
PLAN NO. 4 - CONTROL DOCUMENT
PLAN NO. 5 - CONTROL DOCUMENT
PLAN NO. 6 - CONTROL DOCUMENT

PLAN NO. 1 - CONSTRUCTION DOCUMENTS
PLAN NO. 2 - CONSTRUCTION DOCUMENTS
PLAN NO. 3 - CONSTRUCTION DOCUMENTS
PLAN NO. 4 - CONSTRUCTION DOCUMENTS
PLAN NO. 5 - CONSTRUCTION DOCUMENTS
PLAN NO. 6 - CONSTRUCTION DOCUMENTS

PLAN NO. 1 - PRELIMINARY
PLAN NO. 2 - PRELIMINARY
PLAN NO. 3 - PRELIMINARY
PLAN NO. 4 - PRELIMINARY
PLAN NO. 5 - PRELIMINARY
PLAN NO. 6 - PRELIMINARY

P&R APPROVED
6.14.00

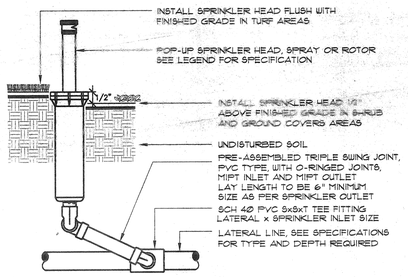

NOTE:
INSTALL SPRINKLER HEADS 6" FROM PAVING EDGE IN GROUND COVER AREAS.
INSTALL SPRINKLER HEADS 4" FROM PAVING EDGE IN TURF AREAS.
INSTALL SPRINKLER HEADS PLUMB. ADJUST SPRAYS OR NOZZLE STREAM TO COVER LANDSCAPE AREA WITHOUT OVERSPRAY ONTO PAVING, FENCES, WALLS OR BUILDINGS.

A POP-UP TURF HEAD

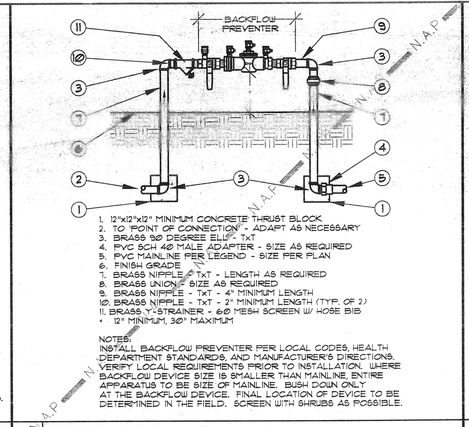

1. 12"x12"x12" MINIMUM CONCRETE THRUST BLOCK
2. TO 'POINT OF CONNECTION' - ADAPT AS NECESSARY
3. BRASS 90 DEGREE ELL - TxT
4. PVC SCH 40 MALE ADAPTER - SIZE AS REQUIRED
5. PVC MAINLINE PER LEGEND - SIZE PER PLAN
6. FINISH GRADE
7. BRASS NIPPLE - TxT - LENGTH AS REQUIRED
8. BRASS UNION - SIZE AS REQUIRED
9. BRASS NIPPLE - TxT - 4" MINIMUM LENGTH
10. BRASS NIPPLE - TxT - 2" MINIMUM LENGTH (TYP. OF 2)
11. BRASS Y-STRAINER - 60 MESH SCREEN W/ HOSE BIB
• 12" MINIMUM, 36" MAXIMUM

NOTES:
INSTALL BACKFLOW PREVENTER PER LOCAL CODES, HEALTH DEPARTMENT STANDARDS, AND MANUFACTURER'S DIRECTIONS. VERIFY LOCAL REQUIREMENTS PRIOR TO INSTALLATION. WHERE BACKFLOW DEVICE SIZE IS SMALLER THAN MAINLINE, ENTIRE APPARATUS TO BE SIZE OF MAINLINE. BUSH DOWN ONLY AT THE BACKFLOW DEVICE. FINAL LOCATION OF DEVICE TO BE DETERMINED IN THE FIELD. SCREEN WITH SHRUBS AS POSSIBLE.

B DOMESTIC BACKFLOW PREVENTER

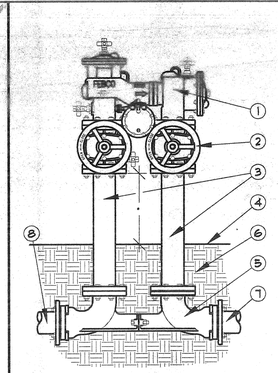

1. FEBCO 825 YD SERIES REDUCED PRESSURE BACKFLOW PREVENTER (SIZE PER PLAN)
2. SHUT-OFF VALVE AS SUPPLIED BY MANUFACTURER WITH R/P DEVICE
3. FLANGED CAST IRON NIPPLE LENGTH AS REQUIRED
4. FINISH GRADE
5. 'VALVE BETTER' BY FEBCO - SIZE PER R/P DEVICE, CONNECTION TYPES AS NECESSARY
6. NATIVE SOIL - COMPACT AS NECESSARY
7. MAINLINE FROM POC - ADAPT AS NECESSARY
8. MAINLINE TO SYSTEM - ADAPT AS NECESSARY
• 12" MIN. 36" MAX.

NOTE: INSTALL BACKFLOW PREVENTER AS REQUIRED BY LOCAL CODES, HEALTH DEPARTMENT STANDARDS, AND MANUFACTURER'S DIRECTIONS. CONTRACTOR SHALL VERIFY LOCAL REQUIREMENTS PRIOR TO INSTALLATION. FINAL BACKFLOW PREVENTER LOCATION TO BE DETERMINED IN THE FIELD. WHERE POSSIBLE, SCREEN BACKFLOW DEVICE WITH SHRUBS.

C IRRIGATION BACKFLOW PREVENTER

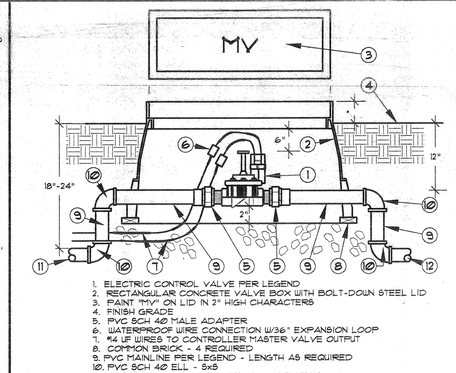

1. ELECTRIC CONTROL VALVE PER LEGEND
2. RECTANGULAR CONCRETE VALVE BOX WITH BOLT-DOWN STEEL LID
3. PAINT "MV" ON LID IN 2" HIGH CHARACTERS
4. FINISH GRADE
5. PVC SCH 40 MALE ADAPTER
6. WATERPROOF WIRE CONNECTION W/36" EXPANSION LOOP
7. #4 UF WIRES TO CONTROLLER MASTER VALVE OUTPUT
8. COMMON BRICK - 4 REQUIRED
9. PVC MAINLINE PER LEGEND - LENGTH AS REQUIRED
10. PVC SCH 40 ELL - 5x5
11. MAINLINE PIPING FROM POINT OF CONNECTION
12. MAINLINE PIPING TO CONTROL VALVES
• 1/2" IN TURF AREAS, 2" IN SHRUB AREAS

D MASTER VALVE

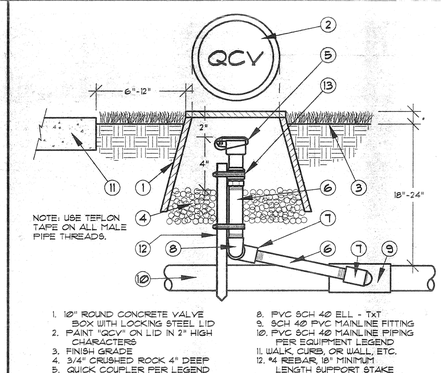

NOTE: USE TEFLON TAPE ON ALL MALE PIPE THREADS.

1. 10" ROUND CONCRETE VALVE BOX WITH LOCKING STEEL LID
2. PAINT "QCV" ON LID IN 2" HIGH CHARACTERS
3. FINISH GRADE
4. 3/4" CRUSHED ROCK 4" DEEP
5. QUICK COUPLER PER LEGEND
6. PVC SCH 80 NIPPLE LENGTH AS REQUIRED
7. PVC SCH 40 STREET ELL TXT
8. PVC SCH 40 ELL - TXT
9. SCH 40 PVC MAINLINE FITTING
10. PVC SCH 40 MAINLINE PIPING PER EQUIPMENT LEGEND
11. WALK, CURB, OR WALL, ETC.
12. #4 REBAR, 18" MINIMUM LENGTH SUPPORT STAKE
13. STAINLESS STEEL CLAMP - 2
• 1/2" IN TURF AREAS
2" IN SHRUB AREAS.

E QUICK COUPLING VALVE

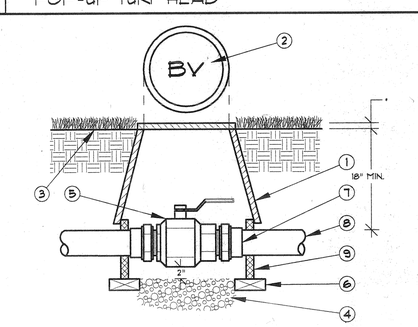

1. 'JUMBO' RECTANGULAR CONCRETE VALVE BOX W/LOCKING STEEL LID
2. PAINT "BV" ON LID IN 2" HIGH CHARACTERS
3. FINISH GRADE
4. 3/4" CRUSHED ROCK - 4" DEPTH
5. BALL VALVE PER IRRIGATION PLAN
6. COMMON BRICK - 4 REQUIRED
7. SCH 40 PVC MALE ADAPTER - 2 REQUIRED
8. MAINLINE PIPING PER IRRIGATION PLAN
9. VALVE BOX EXTENSION(S) AS REQUIRED
• 1/2" IN TURF AREAS AND 2" IN SHRUB AREAS

NOTE:
USE TEFLON TAPE ON ALL MALE PIPE THREADS.

F BALL VALVE

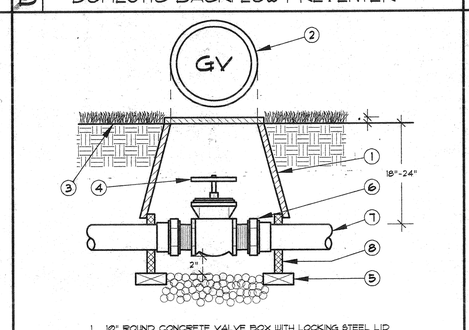

1. 10" ROUND CONCRETE VALVE BOX WITH LOCKING STEEL LID
2. PAINT "GV" ON LID IN 2" HIGH CHARACTERS
3. FINISH GRADE
4. GATE VALVE PER LEGEND W/ SQUARE OP. NUT
5. COMMON BRICK - 4 REQUIRED
6. SCH 40 PVC MALE ADAPTER - 2 REQUIRED
7. MAINLINE PIPING PER LEGEND
8. VALVE BOX EXTENSIONS AS REQUIRED
• 1/2" IN TURF AREAS, 2" IN SHRUB AREAS

NOTES:
USE TEFLON TAPE ON ALL MALE PIPE THREADS.

G GATE VALVE

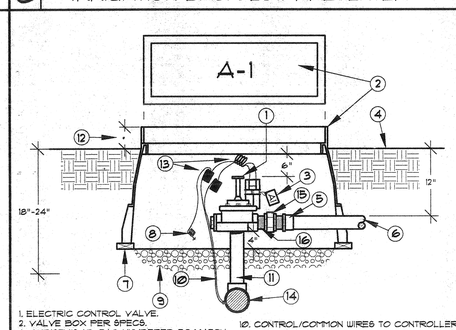

1. ELECTRIC CONTROL VALVE.
2. VALVE BOX PER SPECS.
3. CHRISTY'S I.D. TAG-NUMBERED TO MATCH DRAWINGS.
4. FINISH GRADE.
5. PVC MALE ADAPTER (TYP.)
6. TO SPRINKLERS-ANGLE PIPE TO SPECIFIED DEPTHS WITH 45 DEGREE ELLS.
7. COMMON BRICK (4 REQUIRED.)
8. COMMON WIRE TO OTHER VALVES ON SAME CONTROLLER.
9. NATIVE SOIL.
10. CONTROL/COMMON WIRES TO CONTROLLER.
11. PVC SCHEDULE 80 PIPE.
12. • 2" IN SHRUB AREAS, FLUSH IN LAUN AREAS.
13. WIRE CONNECTORS AND 30" EXPANSION LOOP OF EACH WIRE.
14. MAIN LINE FITTING WITH SOLVENT WELD OUTLET.
15. BRASS UNION.
16. BRASS NIPPLE.

H ELECTRIC CONTROL VALVE

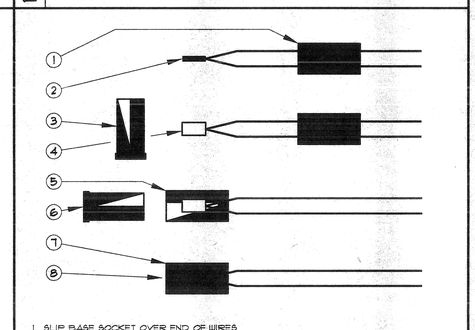

1. CONTROLLER ENCLOSURE PER LEGEND AND/OR NOTES
2. AUTOMATIC CONTROLLER PER LEGEND
3. FINISH GRADE
4. DIRECT BURIAL CONTROL WIRES TO VALVES
5. 3" PVC SLEEP ELL - EXTEND BEYOND EDGE OF BASE
6. 6" THICK MIN. POURED CONCRETE BASE
7. SLOPE EDGE OF BASE 1% TO DRAIN AWAY FROM ENCLOSURE
8. 120V AC POWER IN CONDUIT W/ 15 AMP BREAKER
9. 120V ON-OFF SWITCH WITH CONVENIENCE OUTLET
10. TERMINAL STRIPS FOR CONTROL WIRES
11. 5/8" x 8' MIN. LENGTH COPPER GROUNDING ROD
12. EXTEND EDGE OF BASE 6"MIN BEYOND EDGE OF ENCLOSURE
13. GROUND CONTROLLER PER MANUFACTURER
• EXTEND 4" ABOVE TOP OF BASE
14. TWO 1" PVC SLEEPS FOR COMUNICATION CABLES (2X NEED 1-IN, 1-OUT TO ADJACENT CONTROLLER).

I CONTROLLER

1. SLIP BASE SOCKET OVER END OF WIRES
2. STRIP WIRES APPROX. 5/8" FROM ENDS - TWIST TOGETHER
3. APPLY SEALER TO OUTSIDE OF SEALING PLUG AND FILL CAVITY WITH SEALER
4. PUT CRIMP END OVER WIRE ENDS - CRIMP SLEEVE AND CUT OFF EXCESS WIRE
5. PULL BASE SOCKET OVER END OF WIRES AS FAR AS POSSIBLE
6. PUSH SEALING PLUG INTO BASE SOCKET
7. PUSH WIRES TO END OF BASE SOCKET TO INSURE COMPLETE SEALING OF CONNECTION
8. COMPLETED WATERPROOF WIRE CONNECTION

J WIRE CONNECTOR SEE SPECS

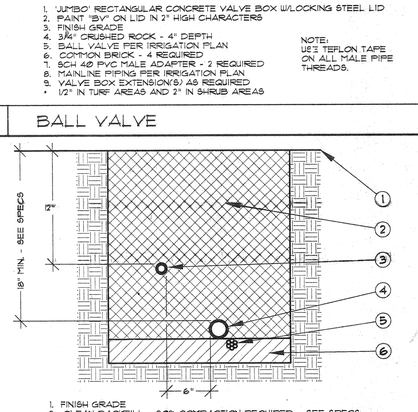

1. FINISH GRADE
2. CLEAN BACKFILL - 90% COMPACTION REQUIRED - SEE SPECS
3. NON-PRESSURE LATERAL LINE PER LEGEND
4. PRESSURE SUPPLY LINE PER LEGEND
5. CONTROL WIRES - INSTALL BELOW PRESSURE SUPPLY LINE
6. PROVIDE 2" OF CLEAN SAND BELOW PRESSURE MAINLINE

NOTES:
BUNDLE AND TAPE WIRES AT 12' O.C. PIGTAIL AND LOOP CONTROL WIRES AT ALL 90 DEGREE CHANGES IN DIRECTION. SPLICING OF WIRE RUNS IS NOT ALLOWED UNLESS APPROVED BY THE CITY. 36" MIN. COVER IS REQUIRED FOR RECLAIMED WATER MAINLINE (WHERE APPLICABLE.) INSTALL 1"x1"x1" THRUST AT ALL CHANGES IN DIRECTION OF PRESSURE MAINLINE AND AT ALL TERMINAL POINTS OF MAINLINE.

K TRENCHING

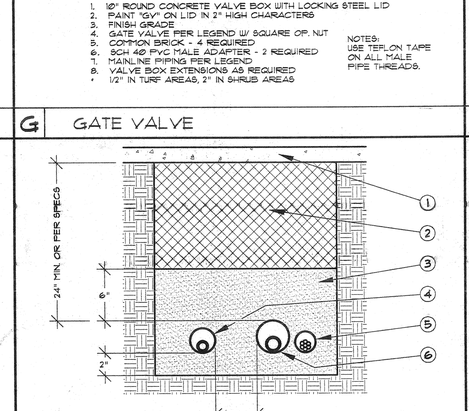

1. HARDSCAPE (TYPICAL)
2. CLEAN BACKFILL - 90% COMPACTION REQUIRED - SEE SPECS
3. SAND (TYPICAL)
4. NON-PRESSURE LATERAL LINE / SLEEVE (SIZE PER CHART)
5. CONTROL WIRE SLEEVE ADJACENT TO MAINLINE SLEEVE (SIZE PER CHART)
6. PRESSURE SUPPLY LINE / SLEEVE (SIZE PER CHART)

NOTES:
ALL SLEEVES TO BE SCH 40 PVC. SIZE ALL SLEEVES PER SLEEVING CHART ON PLANS. EXTEND SLEEVES 12" BEYOND EDGE OF HARDSCAPE ON BOTH ENDS. RECLAIMED WATER SLEEVES TO BE MINIMUM 42"-48" DEEP (OR PER WATER DISTRICT STANDARDS) WHERE APPLICABLE.

L SLEEVING

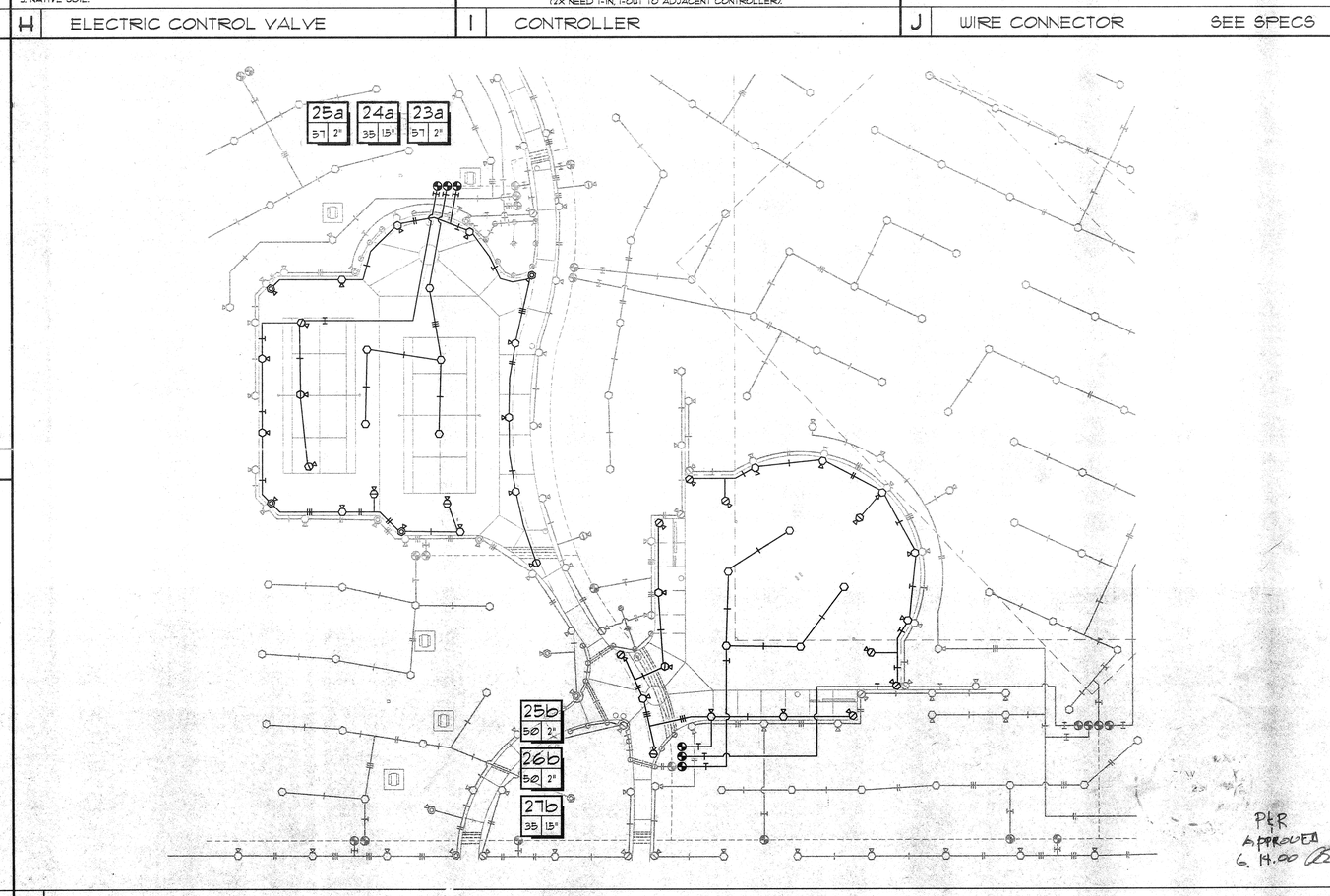

PER APPROVED 6.14.00

O ALTERNATIVE IRRIGATION LAYOUTS

1" = 30'-0"

M

N

David Neault Associates, Inc.
landscape architecture
planning
golf course architecture
41877 enterprise circle north suite 200
temecula, california 92590
909 296.3430
fax: 909 296.3431
e.mail dnala@aol.com

THUNDERSKY PARK
8.7 ACRE ADDITION
IRRIGATION DETAILS

ORANGECREST COUNTRY

Communities Southwest
181 old springs road
anaheim, california 92808
1 714 279.6555 fax 1714 279.6556
contact: Mary Rauschenburg

REGISTERED PROFESSIONAL LANDSCAPE ARCHITECT
David S. Neault
No. 2884
Exp. 06-31-00
STATE OF CALIFORNIA

date:	5/5/2000
drawn:	fhd
checked:	dsn
scale:	N.T.S.

sheet

I-2

of 2 sheets

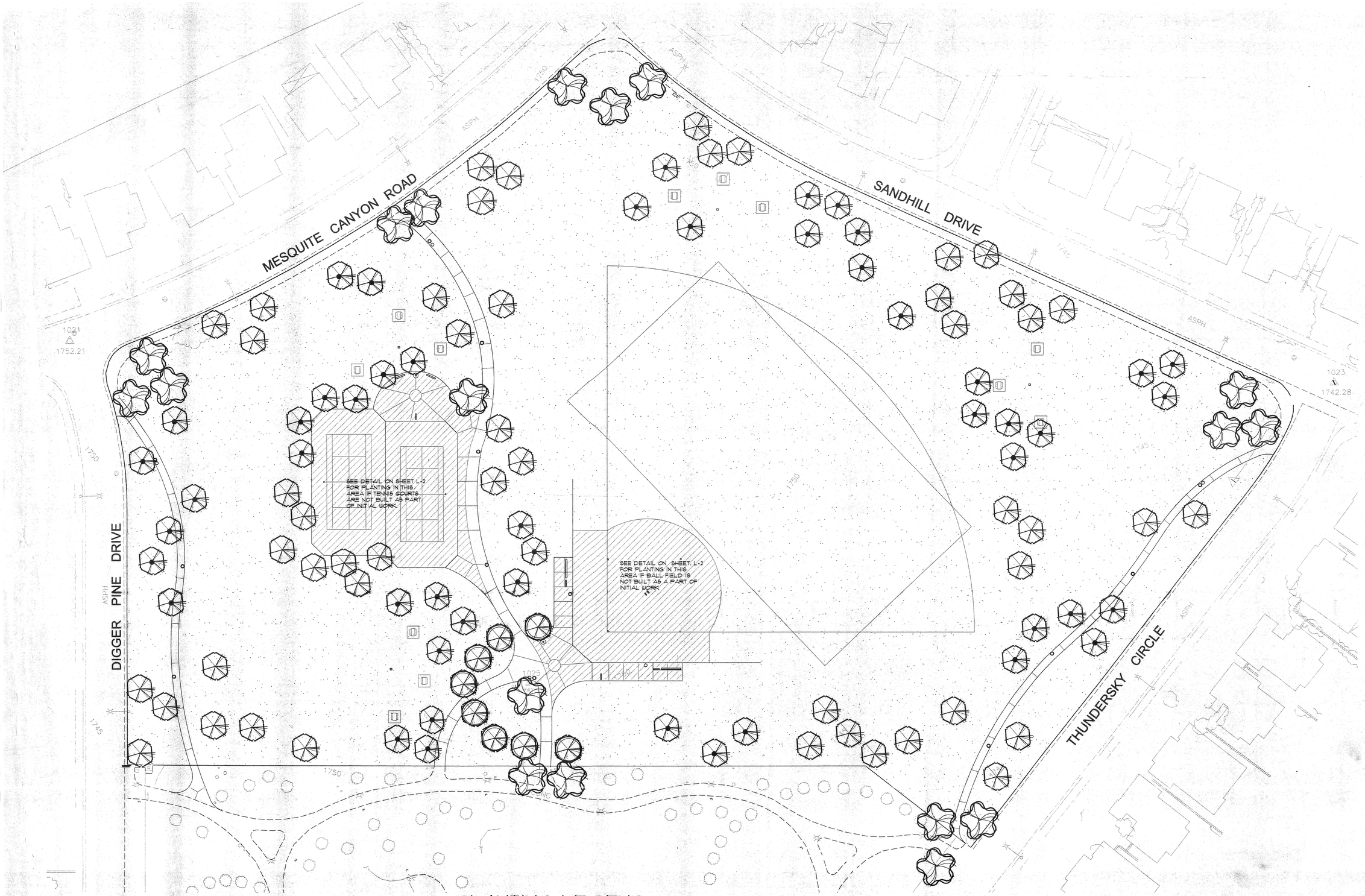

PLANTING LEGEND

SYMBOL	BOTANICAL NAME	COMMON NAME	SIZE	QTY.	REMARKS
TREES					
	CINNAMOMUM CAMPHORA	CAMPHOR TREE	24" BOX	18	STANDARD
	GINKGO BILOBA	MAIDENHAIR TREE	15 GAL.	49	STANDARD
	PYRUS CALLERYANA 'ARISTOCRAT'	ARISTOCRAT PEAR	24" BOX	8	STANDARD
	TRISTANIA CONFERTA	BRISBANE BOX	15 GAL.	49	STANDARD
TURF					
	CITY'S STANDARD 5 WAY MIX - SEE SPECIFICATIONS - HYDROSEEDED @ 8 LBS./1000 S.F.				

P&R APPROVED 6.19.00

David Neault Associates, Inc.
landscape architecture
planning
golf course architecture

41877 enterprise circle north suite 200
temecula, california 92590

909 296.3430
fax: 909 296.3431
e.mail dnala@aol.com

THUNDERSKY PARK
8.7 ACRE ADDITION
PLANTING PLAN

ORANGECREST COUNTRY
Communities Southwest
181 old springs road
anaheim, california 92808
1 714 279.6555 fax 1714 279.6556
contact: Mary R

north

date:	5/5/2000
drawn:	ret
checked:	dsn
scale:	1"=30'-0"
sheet	

L-1

of 2 sheets

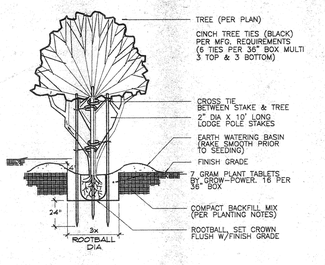

NOTE: 1. ALL PLANT BASINS SHALL RECEIVE A 2" LAYER OF APPROVED MULCH.
2. ALL TREES IN TURF AREAS SHALL BE INSTALLED WITH APPROVED TRUNK GUARDS.

A TREE STAKING – 24" BOX

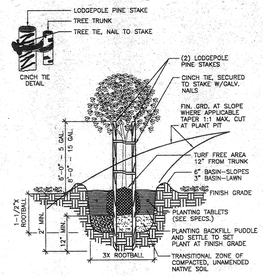

NOTE: 1. ALL PLANT BASINS SHALL RECEIVE A 2" LAYER OF APPROVED MULCH.
2. ALL TREES IN TURF AREAS SHALL BE INSTALLED WITH APPROVED TRUNK GUARDS.

B TREE PLANTING

NOTES:
1. TOP OF ROOT CONTROL BARRIER MUST BE AT GRADE (NEVER BELOW GRADE).
2. POSITION ROOT CONTROL BARRIER AS CLOSE TO STRUCTURE AS POSSIBLE.
3. DURING CONSTRUCTION BARRIER CAN BE PLACED AGAINST INSIDE OF FORMS.
4. THE RAISED ROOT DEFLECTORS MUST BE FACING TOWARD THE TREE.
5. BARRIER TO EXTEND A MINIMUM OF 8" BELOW BOTTOM OF HARDSCAPE.
6. FOR MOST TREES 10-12 FEET OF BARRIER WILL BE ADEQUATE.

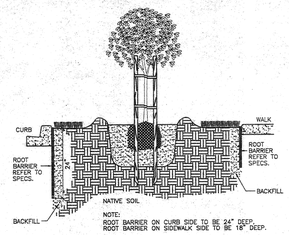

NOTE:
ROOT BARRIER ON CURB SIDE TO BE 24" DEEP.
ROOT BARRIER ON SIDEWALK SIDE TO BE 18" DEEP.

C ROOT BARRIER

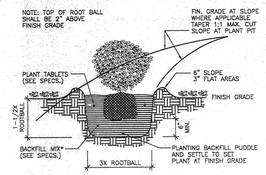

NOTE: ALL PLANT BASINS SHALL RECEIVE A 2" LAYER OF APPROVED MULCH.

D SHRUB PLANTING

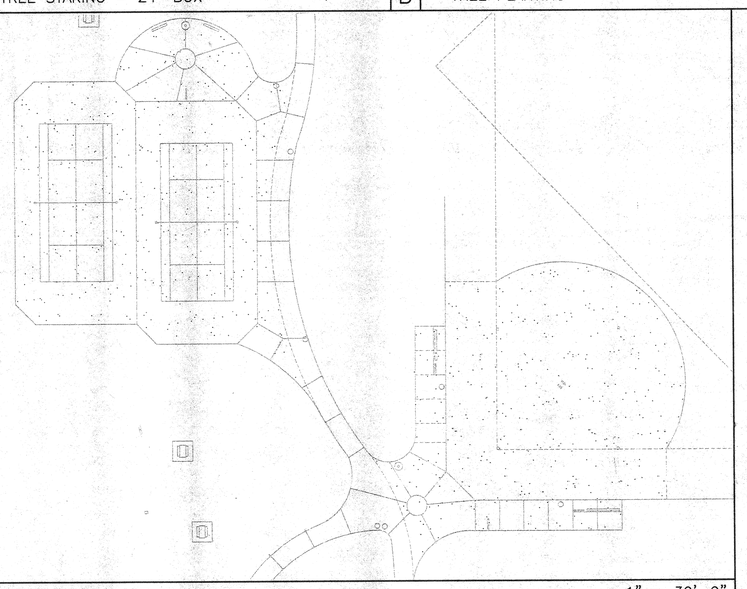

E ALTERNATIVE PLANTING LAYOUTS 1" = 30'-0"

P&R APPROVED
6.14.00

David Neault Associates, Inc.
landscape architecture
planning
golf course architecture
41877 enterprise circle north suite 200
temecula, california 92590
909 296.3430
fax: 909 296.3431
e.mail dnala@aol.com

THUNDERSKY PARK
8.7 ACRE ADDITION
PLANTING DETAILS & NOTES

ORANGECREST COUNTRY
Communities Southwest
181 old springs road
anaheim, california 92808
1 714 279.6555 fax 1714 279.6556
contact: Mary Rauschenburg

David S. Neault
No. 2894
Exp.06-21-00
STATE OF CALIFORNIA

date: 5/5/2000
drawn: ret
checked: dsn
scale: N.T.S.
sheet

L-2

of 2 sheets

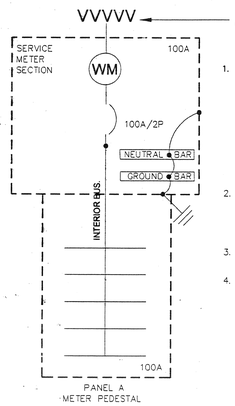

NOTE:

1. NEUTRAL BUS, GROUNDING BUS AND SERVICE RACEWAY ARE TO BE BONDED AND CONNECTED TO DRIVEN GROUND ROD & TO NEAREST AVAILABLE METALIC WATER PIPE. SIZE OF GROUNDING CONDUCTOR TO BE #6. USE #6 COPPER CONDUCTORS FOR BONDING. IF THIS GROUNDING AND BONDING METHOD, IS NOT EXISTING THEN E.C. IS TO PROVIDE, REF. DETAIL 3/E3.
2. REFERENCE CONDUCTOR SCHEDULE AND A.C. BREAKER ASSIGNMENTS FOR SIZES OF NEW CIRCUIT BREAKERS, CONDUCTORS AND CONDUIT.
3. SERIES RATING OF SWITCHGEAR IS 42,000 AMPS.
4. ALL SWITCHGEAR SHOWN IS EXISTING AND IS TO BE REUSED. UNLESS OTHERWISE INDICATED.

A.C. SINGLE LINE DIAGRAM

NO SCALE

2 / E1

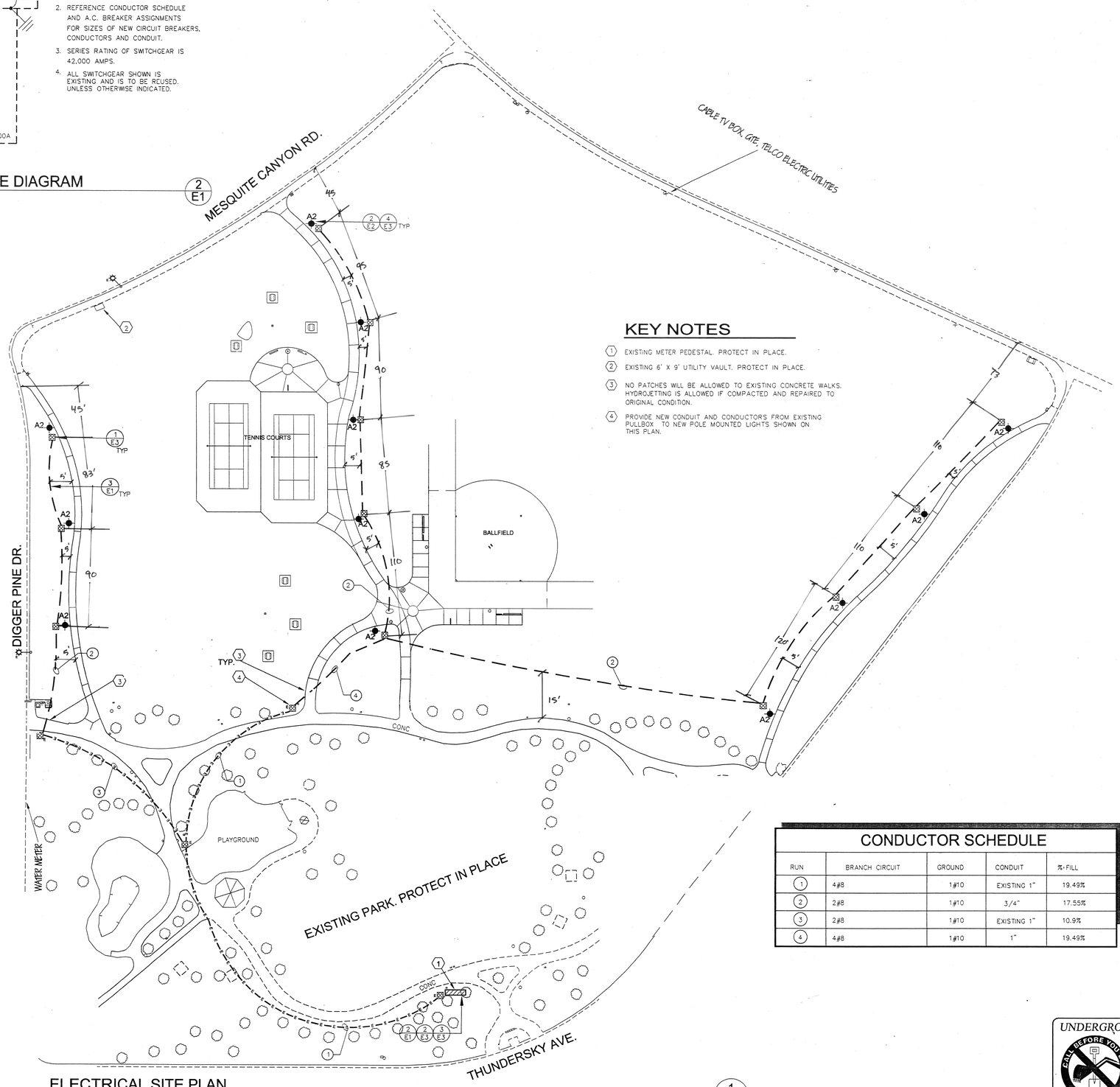

ELECTRICAL SITE PLAN

SCALE - 1" = 40'-0"

1 / E1

KEY NOTES

1. EXISTING METER PEDESTAL. PROTECT IN PLACE.
2. EXISTING 6' X 9' UTILITY VAULT. PROTECT IN PLACE.
3. NO PATCHES WILL BE ALLOWED TO EXISTING CONCRETE WALKS. HYDROJETTING IS ALLOWED IF COMPACTED AND REPAIRED TO ORIGINAL CONDITION.
4. PROVIDE NEW CONDUIT AND CONDUCTORS FROM EXISTING PULLBOX TO NEW POLE MOUNTED LIGHTS SHOWN ON THIS PLAN.

CONDUCTOR SCHEDULE

RUN	BRANCH CIRCUIT	GROUND	CONDUIT	%-FILL
1	4#8	1#10	EXISTING 1"	19.49%
2	2#8	1#10	3/4"	17.55%
3	2#8	1#10	EXISTING 1"	10.9%
4	4#8	1#10	1"	19.49%

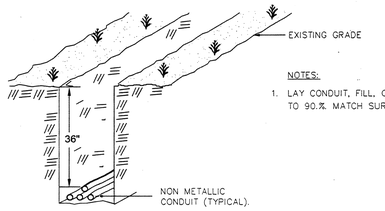

NOTES:

1. LAY CONDUIT, FILL, COMPACT TO 90.% MATCH SURROUNDING.

BRANCH CIRCUIT TRENCH DETAIL

NO SCALE

3 / E1

ELECTRICAL NOTES AND SYMBOLS

1. ALL WORK TO BE DONE IN ACCORDANCE WITH NATIONAL ELECTRICAL CODE 1996 EDITION.
2. ALL UNDERGROUND OUTSIDE BRANCH CIRCUIT AND FEEDER CIRCUITS ARE TO BE RUN IN NONMETALLIC CONDUIT SCHEDULE 40.
3. ALL ELECTRICAL SYMBOLS PER ANSI Y32.9 1972. REAFFIRMED 1989.
4. ALL ELECTRICAL CONDUCTORS ARE TO BE COPPER. INSULATION FOR #12 TO #1 SHALL BE THWN, #1/0 THROUGH #4/0 SHALL BE TYPE XHHW [55mils], AND #250 MCM AND LARGER SHALL BE TYPE XHHW [65mils]. GROUNDING CONDUCTOR SHALL BE THWN.
5. UTILITIES AND LIGHTING EQUIPMENT ARE DRAWN DIAGRAMMATICALLY. SCALED DIMENSIONS ARE APPROXIMATE ONLY. BEFORE PROCEEDING WITH WORK, CAREFULLY CHECK AND VERIFY DIMENSIONS. IMMEDIATELY NOTIFY ENGINEER OF DISCREPANCIES BETWEEN DRAWINGS OR SPECIFICATIONS AND ACTUAL CONDITIONS. ALTHOUGH SIZES AND LOCATIONS OF EQUIPMENT ARE DRAWN TO SCALE, WHEREVER POSSIBLE, IT IS NOT WITHIN SCOPE OF THE DRAWINGS TO SHOW NECESSARY OFFSETS, OBSTRUCTIONS, OR SITE CONDITIONS. THE CONTRACTOR WILL BE RESPONSIBLE TO INSTALL WORK IN SUCH A MANNER THAT IT WILL CONFORM TO SITE CONDITIONS, COMPLETE AND IN GOOD WORKING ORDER.
6. ALL BRANCH CIRCUITS AND FEEDERS CIRCUITS SHALL HAVE A GROUNDING CONDUCTOR PULLED WITH THEM. REF A.C. BREAKER ASSIGNMENTS & LIGHT. AND POWER LAYOUTS FOR SIZE OF GROUNDING CONDUCTOR. THIS COPPER GROUNDING CONDUCTOR SHALL BE TERMINATED TO GROUNDING TERMINALS OF ALL RECEPTACLES & ALL NONCURRENT-CARRYING CONDUCTIVE SURFACES OF FIXED ELECTRIC EQUIPMENT LIKELY TO BECOME ENERGIZED THAT ARE SUBJECT TO PERSONAL CONTACT.
7. 1 / E1 — INDICATES DETAIL # / INDICATES SHEET #
8. E — EXISTING STREET LIGHT. REF. SITE PLAN.
9. CONDUCTORS W/GROUND RUN UNDERGROUND. REF. SITE PLAN FOR SIZES OF CONDUCTORS AND CONDUITS.
10. CONDUCTORS W/GROUND RUN EXPOSED. REF. SITE PLAN FOR SIZES OF CONDUCTORS AND CONDUITS.
11. UNDERGROUND CONCRETE PULLBOX #3-1/2 (17.5"X12.5" X12.5") UNLESS OTHERWISE INDICATED. PREFAB CONCRETE W/TRAFFIC COVER WHERE SUBJECT TO VEHICULAR TRAFFIC.
12. E — EXISTING UNDERGROUND CONCRETE PULLBOX #3-1/2 (17.5"X12.5"X12.5") UNLESS OTHERWISE INDICATED.
13. A2 — PROPOSED WALKWAY LUMINAIRE. REFERENCE LUMINAIRE SCHEDULE FOR PART NUMBER.
14. EXISTING METER PEDESTAL TO BE REUSED.

ABBREVIATIONS:

EXIST.	EXISTING TO BE REUSED	E.C.	ELECTRICAL CONTRACTOR
PROV.	TO BE PROVIDED NEW, BY E.C.	TYP.	TYPICAL.

VOLTAGE DROP CALCULATIONS

A2 LIGHTS EAST

FROM – TO	QTY	VOLTS AMPS	VOLT	AMPS	CONDR SIZE	Rac	DIST.	VOLT DROP	VOLT %
PAN – A2	4	698	240	2.91	#8	0.7800	1075	4.87	2.03%
A2 – A2	3	523	240	2.18	#8	0.7800	120	0.41	0.17%
A2 – A2	2	349	240	1.45	#8	0.7800	120	0.27	0.11%
A2 – A2	1	174	240	0.73	#8	0.7800	120	0.14	0.06%
					TOTALS		1435	5.69	2.37%

A2 LIGHTS WEST

FROM – TO	QTY	VOLTS AMPS	VOLT	AMPS	CONDR SIZE	Rac	DIST.	VOLT DROP	VOLT %
PAN – PBOX	8	1,395	240	5.81	#8	0.7800	340	3.08	1.28%
PBOX – A2	5	872	240	3.63	#8	0.7800	360	2.04	0.85%
A2 – A2	4	698	240	2.91	#8	0.7800	120	0.54	0.23%
A2 – A2	3	523	240	2.18	#8	0.7800	100	0.34	0.14%
A2 – A2	2	349	240	1.45	#8	0.7800	100	0.23	0.09%
A2 – A2	1	174	240	0.73	#8	0.7800	80	0.09	0.04%
					TOTALS		1100	6.32	2.64%

David Neault Associates
landscape architecture
planning
golf course architecture
41877 enterprise circle north
temecula, california 92590
909 699.5071
fax: 909 676.2793
e.mail dna_aila@msn.com

THUNDERSKY PARK 8.7 ACRE ADDITION ELECTRICAL SITE PLAN

ORANGECREST COUNTRY
Communities Southwest
181 old springs road
anaheim, california 92808
1 714 279.6555 fax 1714 279.6556
contact: Mary Rauschenburg

north

date:	12/1/99
drawn:	JMN
checked:	DEH 3/18/00
project no:	9912041
file name:	tskyprk2

sheet

E-1

of sheets

UNDERGROUND SERVICE ALERT
CALL BEFORE YOU DIG
Section 4216/4217 of the Government Code requires a DIG ALERT Identification Number be issued before a "Permit to Excavate" will be valid. For your Dig Alert I.D. Number Call Underground Service Alert
TOLL FREE 1-800-422-4133
Two working days before you dig
© DREAM ENGINEERING INC. 2000

Engineering Incorporated
Consulting Electrical Engineers
APPLE VALLEY (760)242-3369 dreamjoe@earthlink.net
FAX (760)242-1092
PALM DESERT (760)773-4478 dreamjoe@aol.com

© DREAM ENGINEERING INC. 2000

REGISTERED PROFESSIONAL ENGINEER JOSEPH M. NOVAK NO E 9333 EXP: SEP 30 2001 ELECTRICAL STATE OF CALIFORNIA

P&R APPROVED 6.19.00

DRAWING NUMBER

PLAN HOLD CORPORATION • IRVINE, CALIFORNIA
REORDER BY NUMBER: 1-17-2001

LUMINAIRE SCHEDULE

DETAIL NAME	STYLE	MFGR	PART NO.	LAMPS	DESCRIPTION	POLE FOOT DETAIL	EPA	MH GROUND	POLE LENGTH
2 / E2	A	SPAULDING	MWC HB150LU240BZPOLY	1X150HPSX240V	NEW PUMPKIN HEAD ON NEW POLE	4 / E3	2.1	15'	15'

PANEL ASSIGNMENTS

MANF MYERS	PANEL PANEL A
VOLTS 120/240	LOCATION – REF ELECTRICAL SITE PLAN
PHASE 1	FEEDER – REF. A.C. SINGLE LINE
WIRE 3	AMPS 100
M.O.C.D. 100 AMPS	MOUNTING – SELF STANDING

CKT #	DESCRIPTION/ LOCATION	LOAD TYPE	VOLT AMPS	CONN	POHASE	CKT BKR AMPS	POLES	BRKR TYPE	CONDUCTOR HOT	CONDUCTOR NEUTRAL	CONDUCTOR GROUND
1	WALKWAY "ODD" (9)	LITES	783	C	A	20	2		#12	#12	
2	WALKWAY "EVEN" (9)	LITES	783	C	A	20	2		#12	#12	
3	WALKWAY "ODD" (9)	LITES	783	C	C	--			#12		
4	WALKWAY "EVEN" (9)	LITES	783	C	C	--			#12		
5	PLAY AREA/ TOT LOT (3) GAZEBO (1)	LITES	1542	C	A	20	2		#12	#12	
6	BASKETBALL (FUT)	LITES		N	A	40	2				
7	PLAY AREA/ TOT LOT (3) GAZEBO (1)	LITES	1542	C	C	--			#12		
8	BASKETBALL (FUT)	LITES		N	C	--					
9	SPARE				A	20	1				
10	SPARE				A	20	1				
11	PEDESTAL	RECEPT	180		C	20	1		#12	#12	
12	TC & CONTACTORS	CONTROL	500	C	C	20	1		#12	#12	
13	IRRIGATION CONTROL	CONTROL	500	N	A	20	2		#12	#12	
14	IRRIGATION PUMP 5HP	MOTOR	3220	N	A	50	2		#2	#8	
15	IRRIGATION CONTROL	CONTROL	500	N	A	--			#12		
16	IRRIGATION PUMP 5HP	MOTOR	3220	N	A	--			#2	#8	
17	A2 LIGHTS WEST	LITES	696	C	A	20	2		#12	#12	NOTE 2
18	SPARE				A	20	1				
19	A2 LIGHTS WEST	LITES	696	C	C	--			#12		NOTE 2
20	SPARE				C	20	1				
21	A2 LIGHTS EAST	LITES	348	C	A	20	1		#10	#10	NOTE 2
22	SPARE				A	20					
23	A2 LIGHTS EAST	LITES	696	C	C	--			#10		NOTE 2

PROPOSED CONTINUOUS LOAD	9652 VA
PROPOSED CONTINUOUS LOAD + 25%	12065 VA
PROPOSED NON-CONTINUOUS LOAD	6440 VA
PROPOSED TOTAL LOAD	18505 VA
PROPOSED AMPS/LEG	77 AMPERES
PROPOSED BUSS RATING	100 AMPERES

NOTE: 1. ALL SWITCHGEAR SHOWN ABOVE IS EXISTING AND IS TO BE REUSED, UNLESS NOTED OTHERWISE.
2. PROVIDE NEW CIRCUIT BREAKER, CONDUCTORS AND CONDUIT. REF SITE PLAN.

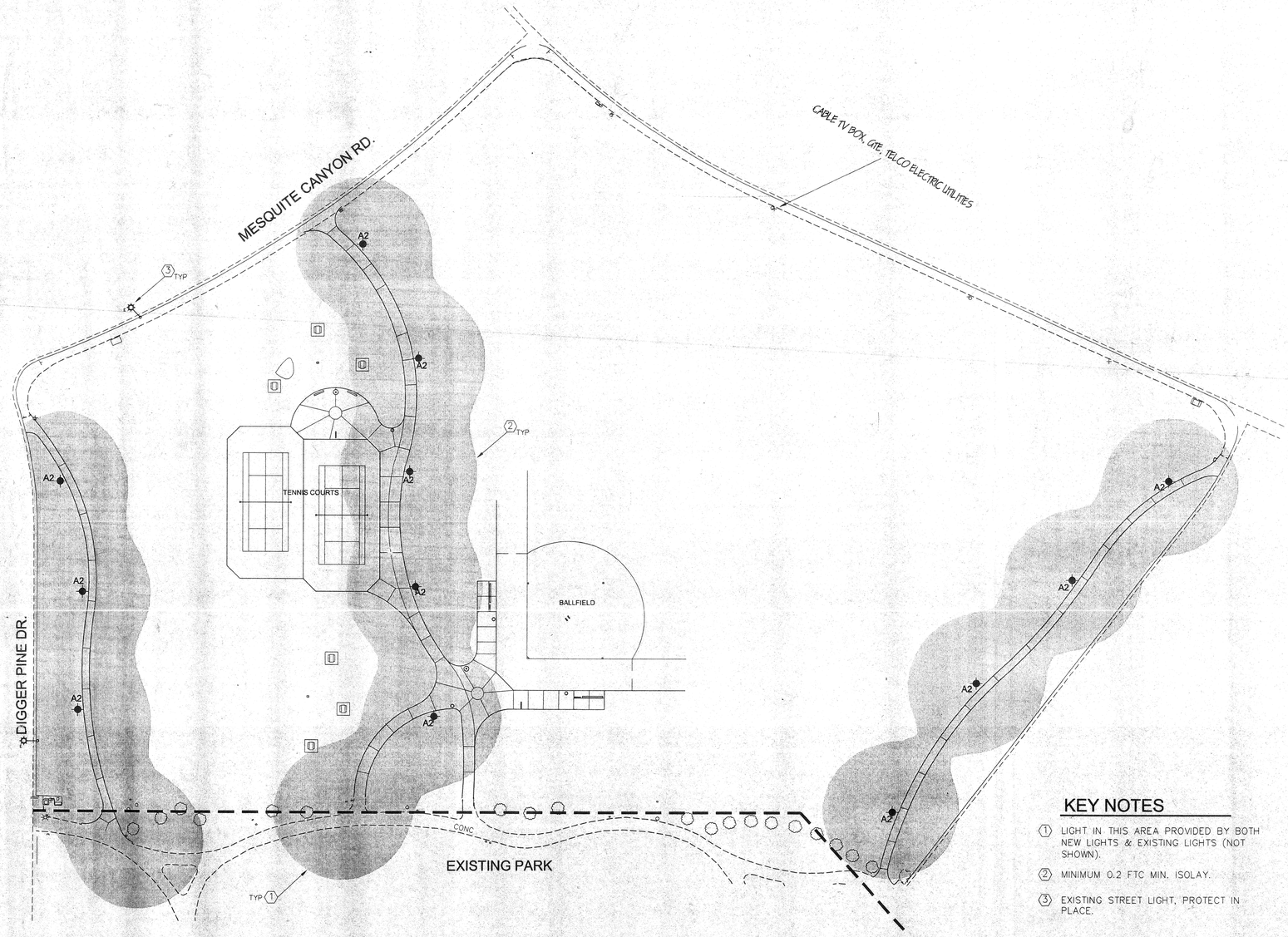

KEY NOTES

1. LIGHT IN THIS AREA PROVIDED BY BOTH NEW LIGHTS & EXISTING LIGHTS (NOT SHOWN).
2. MINIMUM 0.2 FTC MIN. ISOLAY.
3. EXISTING STREET LIGHT, PROTECT IN PLACE.

PHOTOMETRIC SITE PLAN

SCALE - 1" = 40'-0"

1 / E2

UNDERGROUND SERVICE ALERT
CALL BEFORE YOU DIG
Section 4216/4217 of the Government Code requires a DIG ALERT Identification Number be issued before a "Permit to Excavate" will be valid. For your Dig Alert I.D. Number, Call Underground Service Alert
TOLL FREE 1-800-422-4133
Two working days before you dig
© DREAM ENGINEERING INC. 2000

Engineering Incorporated
Consulting Electrical Engineers
APPLE VALLEY (760)242-3369 dreamjoe@earthlink.net
FAX (760)242-1092
PALM DESERT (760)773-4478 dreamjoe@aol.com

© DREAM ENGINEERING INC. 2000

REGISTERED PROFESSIONAL ENGINEER JOSEPH M. NOTA NO E 14333 EXP: SEP 30 2001 ELECTRICAL STATE OF CALIFORNIA

P&R APPROVED 6.14.00

David Neault Associates
landscape architecture
planning
golf course architecture
41877 enterprise circle north
suite 120a
temecula, california 92590
909 699.5071
fax: 909 678.2793
e.mail dna_asla@msn.com

THUNDERSKY PARK 8.7 ACRE ADDITION PHOTOMETRIC SITE PLAN

ORANGECREST COUNTRY
Communities Southwest
181 old springs road
anaheim, california 92808
1 714 279.3555 fax 1714 279.6556
contact: Mary Rauschenburg

north

date:	12/1/99
drawn:	JMN
checked:	GAH 3/18/00
project no:	9912041
file name:	tskypke?
sheet	E-2
of	sheets

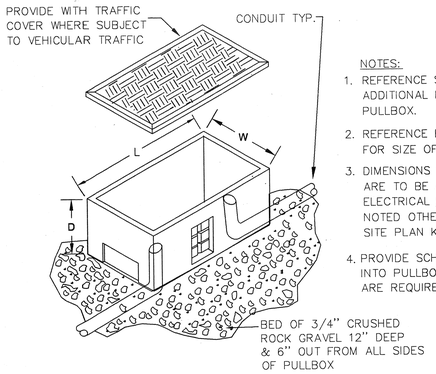

NOTES:

1. REFERENCE SPECIFICATIONS FOR ADDITIONAL INFORMATION ON PULLBOX.
2. REFERENCE ELECTRICAL SITE PLAN FOR SIZE OF CONDUITS.
3. DIMENSIONS SHOWN FOR PULLBOX ARE TO BE AS SHOWN ON ELECTRICAL SYMBOLS UNLESS NOTED OTHERWISE ON ELECTRICAL SITE PLAN KEYNOTES.
4. PROVIDE SCHEDULE 80 SWEEPS INTO PULLBOX WHERE SWEEPS ARE REQUIRED.

PULLBOX INSTALLATION DETAIL

NO SCALE

1 / E3

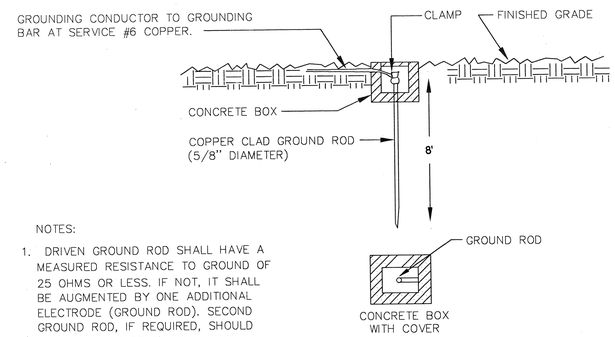

NOTES:

1. DRIVEN GROUND ROD SHALL HAVE A MEASURED RESISTANCE TO GROUND OF 25 OHMS OR LESS. IF NOT, IT SHALL BE AUGMENTED BY ONE ADDITIONAL ELECTRODE (GROUND ROD). SECOND GROUND ROD, IF REQUIRED, SHOULD BE A MINIMUM OF 6' FROM FIRST.

DRIVEN GROUND ROD DETAIL

NO SCALE

3 / E3

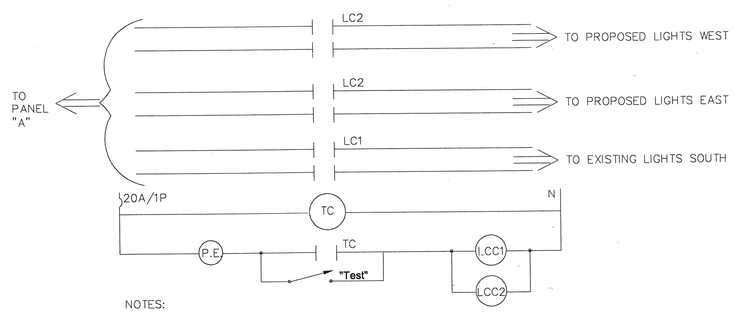

NOTES:

1. ALL CONTROL EQUIPMENT SHOWN ABOVE IS EXISTING AND TO BE REUSED UNLESS OTHERWISE INDICATED. E.C. IS TO PROVIDE LIGHTING CONTACTOR COIL LCC2 AND LIGHTING CONTACTORS LCC2.
2. ALL CONTROL WIRING TO BE #12THWN COPPER IN 1/2"C WHERE EXPOSED.
3. RATINGS OF CONTACTS TO MATCH CIRCUIT BREAKER.
4. MOUNT NEW CONTACTORS AND COIL IN EXISTING METER PEDESTAL, REF. DETAIL.
5. ALL LIGHTS (OLD AND NEW) WILL BE CONTROLLED BY P.E. CELL ON AND TIMECLOCK OFF. PROVIDE NEW H-O-A OPERATION (ON-OFF-MANUAL) 3.

CONTROL DIAGRAM - EXTERIOR LIGHTING

NO SCALE

2 / E3

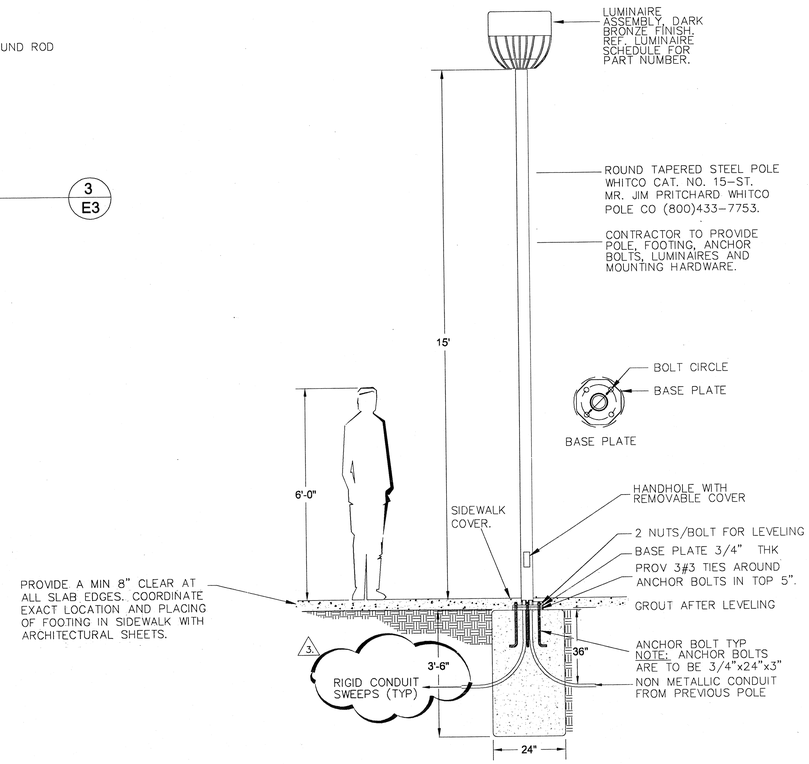

DETAIL - FIXTURE "A2" WALKWAY POLE

NO SCALE

4 / E3

David Neault Associates
landscape architecture
planning
golf course architecture
41877 enterprise circle north suite 120a
temecula, california 92590
909 699.5071
fax: 909 676.2793
e.mail dna_asla@msn.com

THUNDERSKY PARK 8.7 ACRE ADDITION ELECTRICAL DETAIL SHEET

ORANGECREST COUNTRY
Communities Southwest
181 old springs road
anaheim, california 92808
1 714 279.6555 fax 1714 279.6556
contact: Mary Rauschenburg

1. ADDED EAST WALKWAY LIGHTS 2/09/00	R.M.
2. PER CITY COMMENTS 2/23/00	R.M.
3. PER CITY COMMENTS NO OBS. 3/16/00	R.M.
4. CLIENTS COMMENTS 5/16/00	D.Z.
5. ADDED 3#3 TIES 9/15/00	R.M.

date: 12/1/99
drawn: JMN
checked:
project no: 9912041
file name: tskypke?

sheet

E-3

of sheets

UNDERGROUND SERVICE ALERT
CALL BEFORE YOU DIG
Section 4216/4217 of the Government Code requires a DIG ALERT Identification Number be issued before a "Permit to Excavate" will be valid. For your Dig Alert I.D. Number Call Underground Service Alert
TOLL FREE 1-800-422-4133
Two working days before you dig

DREAM Engineering Incorporated
Consulting Electrical Engineers
APPLE VALLEY (760)242-3369 dreamjoe@earthlink.net
FAX (760)242-1092
PALM DESERT (760)773-4478 dreamjoe@aol.com

REGISTERED PROFESSIONAL ENGINEER JOSEPH M. NOLAN NO E 9333 EXP: SEP 30 2001 ELECTRICAL STATE OF CALIFORNIA

© DREAM ENGINEERING INC. 2000