DRAWING NUMBER

DRAWING NUMBER

DRAWING NUMBER

DRAWING NUMBER
TA-18

TAFT PARK

6826 NEW RIDGE DR.
CITY OF RIVERSIDE
DEPARTMENT OF PARKS & RECREATION

t. i. maloney, inc.
landscape architecture ▪ planning
6180 Brockton Avenue, Suite 201 ▪ Riverside, CA 92506
(714) 369-0700 fax (714) 369-4039

revisions

consultants

RWR/PASCOE
22690 CACTUS AVE., #140
MORENO VALLEY, CA. 92553
(714) 653-9295
CONTACT: JACK TAMAI

INTEGRA ENG.
621 E. CARNEGIE DR.
SUITE 120
SAN BERNARDINO, CA 92408
CONTACT: BERNIE BERNT
714-383-0200

vicinity map

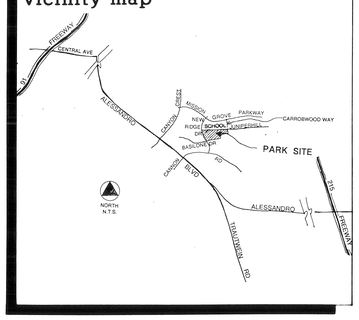

approvals

Dee W. Bachman 8/31/92
DIRECTOR PARK & RECREATION

Terry Pilkey 8/31/92
PARK SUPERINTENDENT

Ronald L. Rose 8/31/92
RECREATION SUPERINTENDENT

Robert L. Johnson 8-31-92
PARK PLANNING COORDINATOR

index

SHEET		
1 OF 13	T-1	TITLE SHEET
2 OF 13	G-1	GRADING PLAN
3 OF 13	C-1	CONSTRUCTION PLAN
4 OF 13	C-2	CONSTRUCTION DETAILS
5 OF 13	C-3	CONSTRUCTION DETAILS
6 OF 13	C-4	CONSTRUCTION DETAILS
7 OF 13	C-5	CONSTRUCTION DETAILS
8 OF 13	I-1	IRRIGATION PLAN
9 OF 13	I-2	IRRIGATION DETAILS
10 OF 13	P-1	PLANTING PLAN
11 OF 13	P-2	PLANTING DETAILS
12 OF 13	E-1	ELECTRICAL PLAN
13 OF 13	E-2	ELECTRICAL DETAILS

PLAN NO. P-0928

TAFT PARK

DRAWING NUMBER TA-17

TAFT ELEMENTARY SCHOOL

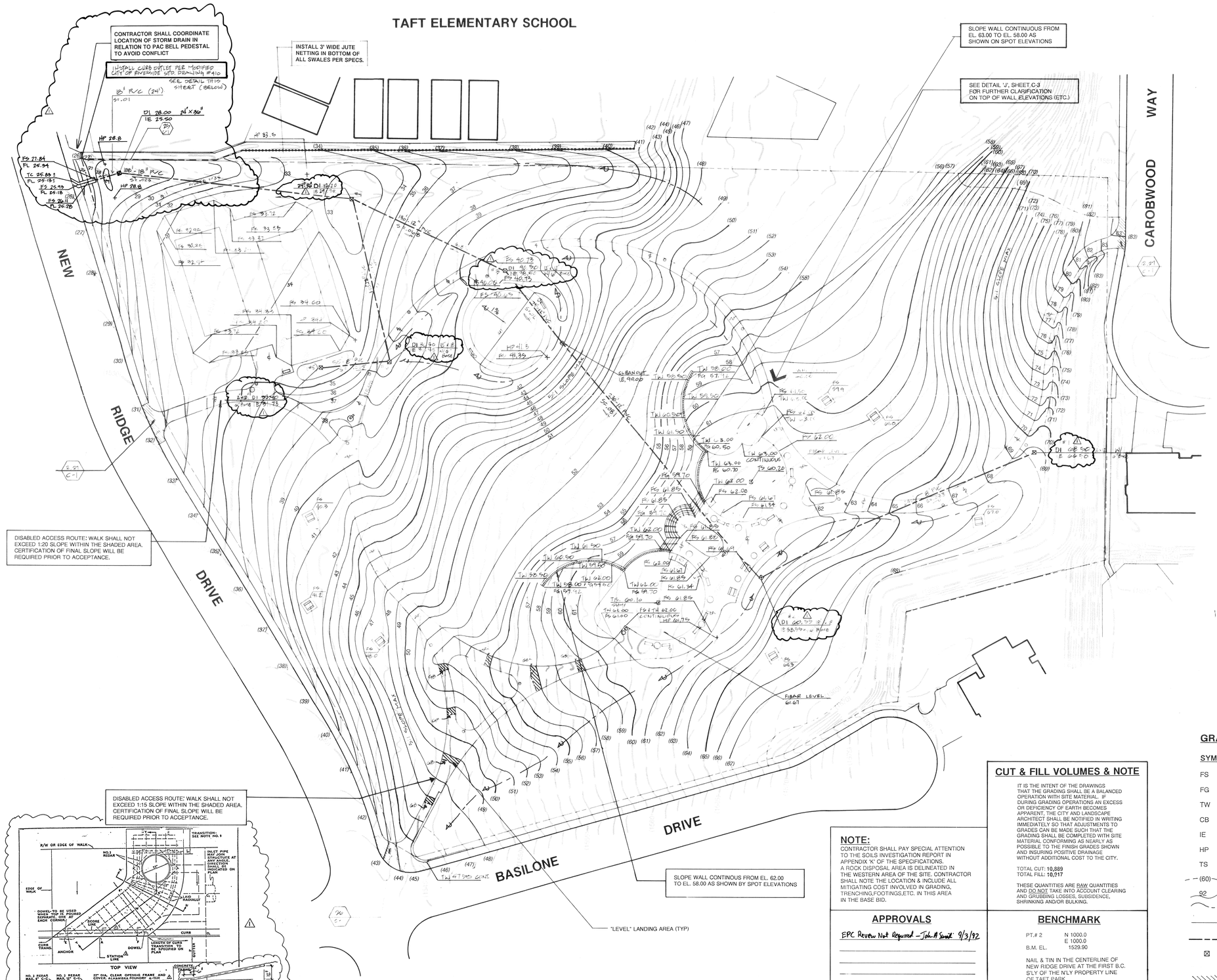

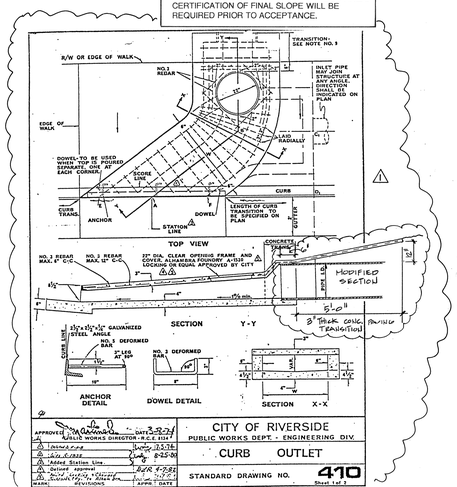

CITY OF RIVERSIDE BUSINESS TAX CERTIFICATE #:
T. I. MALONEY, INC. -114037, Exp. 3/1/93
JOHN R. BYERLY, INC. - 5463, Exp. 12/31/92

GRADING NOTES

1. All grading shall conform to Chapter 70 of the current city adopted edition of the Uniform Building Code.
2. All provisions of the preliminary soils report prepared by John R. Byerly, dated January, 1991 shall be complied with during grading operations.
3. This plan is for grading purposes only. Issuance of a permit based on this plan does not constitute approval of driveway locations or sizes, parking lot structural sections or layout, building locations, off-site drainage facilities or other items not related directly to the basic grading operation.
4. Certification from the registered landscape architect stating that the grading has been completed per the approved plan, and a compaction report from the soil engineer for fill areas are required prior to building permits being issued.
5. Contractor is responsible for erosion, dust and temporary drainage control during grading operations.
   a. All manufactured slopes in excess of 5 feet in vertical height are to be protected from erosion during rough grading operations and, thereafter, until installation of final groundcover. (See landscape plans for final groundcover).
   b. All slope protection swales to be constructed at the same time as banks are graded.
   c. The developer and his contractor are responsible for implementation and maintenance of the erosion control measures shown on this plan and also to provide any additional erosion control measures (e.g., hydroseeding, mulching of straw, sand bagging, diversion ditches, erosion and/or the introduction of dirt, mud or debris to existing public streets and/or onto adjacent properties during any phase of construction operations. Special attention shall be given to additional erosion control measures noted above during the period of October 15 to April 15.
   d. After a rainstorm, all silt and debris shall be removed from check berms and check dams. Silt and debris shall be removed from City of Riverside streets. This requirement shall remain in effect until city acceptance of the subdivision that drains onto city streets.
6. Any improvements constructed in the public right-of-way will require a separate construction permit and inspection from the Public Works Department.
7. Any walls, fences, structures and/or appurtances adjacent to this project are to be protected in place. If grading operations damage or adversely affect said items in any way, the contractor and/or developer is responsible for working out an acceptable solution to the satisfaction of the affected property owner (s).
8. The contractor/developer is responsible for ensuring that retaining walls do not interfere with provision of utilities.
9. It is the grading contractor's responsibility to ensure that adequate compaction has been attained on the entire grading site, including fill areas outside the building pads and on all fill slopes.
10. It is the soil engineer's responsibility to observe and perform compaction tests during the grading to evaluate the preparation of the natural ground surface to receive the fill and the compaction attained in the fill, including fill areas outside the building pads and on all fill slopes.
11. Earthwork quantities are shown for grading permit purposes only, and the City of Riverside is not responsible for their accuracy.

vicinity map

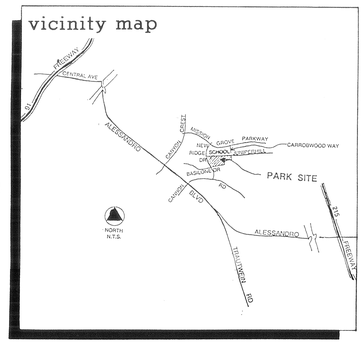

GRADING LEGEND

SYMBOL	DESCRIPTION
FS	FINISH SURFACE ELEVATION
FG	FINISH GRADE ELEVATION
TW	TOP OF WALL ELEVATION
CB	TOP OF CATCH BASIN ELEVATION
IE	INVERT ELEVATION
HP	HIGH POINT ELEVATION
TS	TOP OF SUMP ELEVATION
(60)	EXISTING CONTOUR 1' INTERVAL
92	PROPOSED CONTOUR 1' INTERVAL
	SOFTSCAPE FLOW DIRECTION
	HARDSCAPE FLOW DIRECTION
	SCH 40 PVC DRAINLINE - SIZE PER PLAN
⊠	DRAIN INLET PER SPECIFICATIONS △
	SAWCUT AND REMOVE EXISTING SIDEWALK IN A LEGAL MANNER. INSTALL NEW CONCRETE WALK AS SHOWN ON PLANS
GB	GRADE BREAK

CUT & FILL VOLUMES & NOTE

IT IS THE INTENT OF THE DRAWINGS THAT THE GRADING SHALL BE A BALANCED OPERATION WITH SITE MATERIAL. IF DURING GRADING OPERATIONS AN EXCESS OR DEFICIENCY OF EARTH BECOMES APPARENT, THE CITY AND LANDSCAPE ARCHITECT SHALL BE NOTIFIED IN WRITING IMMEDIATELY SO THAT ADJUSTMENTS TO GRADES CAN BE MADE SUCH THAT THE GRADING SHALL BE COMPLETED WITH SITE MATERIAL CONFORMING AS NEARLY AS POSSIBLE TO THE FINISH GRADES SHOWN AND INSURING POSITIVE DRAINAGE WITHOUT ADDITIONAL COST TO THE CITY.

TOTAL CUT: **10,889**
TOTAL FILL: **10,917**

THESE QUANTITIES ARE RAW QUANTITIES AND DO NOT TAKE INTO ACCOUNT CLEARING AND GRUBBING LOSSES, SUBSIDENCE, SHRINKING AND/OR BULKING.

NOTE:

CONTRACTOR SHALL PAY SPECIAL ATTENTION TO THE SOILS INVESTIGATION REPORT IN APPENDIX 'K' OF THE SPECIFICATIONS. A ROCK DISPOSAL AREA IS DELINEATED IN THE WESTERN AREA OF THE SITE. CONTRACTOR SHALL NOTE THE LOCATION & INCLUDE ALL MITIGATING COST INVOLVED IN GRADING, TRENCHING, FOOTINGS, ETC. IN THIS AREA IN THE BASE BID.

APPROVALS

EPC Review Not Required – John A Sweet 9/3/92

BENCHMARK

PT.# 2 N 1000.0
E 1000.0
B.M. EL. 1529.90

NAIL & TIN IN THE CENTERLINE OF NEW RIDGE DRIVE AT THE FIRST B.C. S'LY OF THE N'LY PROPERTY LINE OF TAFT PARK.

t. i. maloney, inc.
landscape architecture • planning
6180 Brockton Avenue, Suite 201 • Riverside, CA 92506
(714) 369-0700 fax (714) 369-4039

TAFT PARK
CITY OF RIVERSIDE
DEPARTMENT OF PARK AND RECREATION

SHEET DESCRIPTION
GRADING & DEMOLITION PLAN

REGISTERED LANDSCAPE ARCHITECT
JOHN R. BYERLY
8-28-92
STATE OF CALIFORNIA

DATE	2/21/92
JOB NO	910308
DRAWN	KB
CHECKED	DG
REVISIONS	
△ 1-27-93	

SCALE 1" = 30' - 0"

G-1

2 of 13

PLAN NO. P-0928

DRAWING NUMBER

TA-16

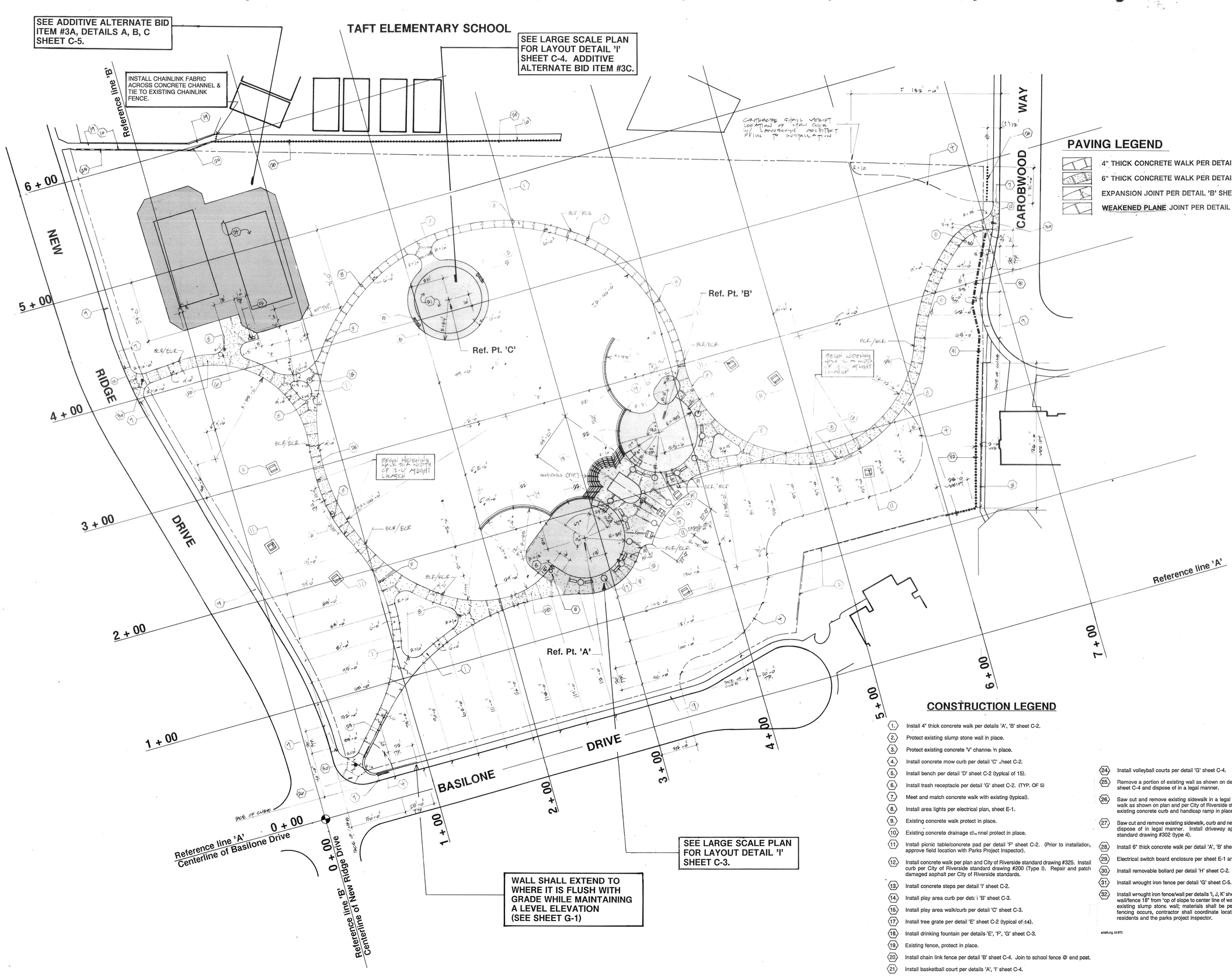

PAVING LEGEND

- 4" THICK CONCRETE WALK PER DETAIL 'A', 'B' SHEET C-2.
- 6" THICK CONCRETE WALK PER DETAIL 'A', 'B' SHEET C-2.
- EXPANSION JOINT PER DETAIL 'B' SHEET C-2.
- **WEAKENED PLANE** JOINT PER DETAIL 'B' SHEET C-2.

CONSTRUCTION LEGEND

1. Install 4" thick concrete walk per details 'A', 'B' sheet C-2.
2. Protect existing slump stone wall in place.
3. Protect existing concrete 'V' channel in place.
4. Install concrete mow curb per detail 'C' sheet C-2.
5. Install bench per detail 'D' sheet C-2 (typical of 15).
6. Install trash receptacle per detail 'G' sheet C-2. (TYP. OF 5)
7. Meet and match concrete walk with existing (typical).
8. Install area lights per electrical plan, sheet E-1.
9. Existing concrete walk protect in place.
10. Existing concrete drainage channel protect in place.
11. Install picnic table/concrete pad per detail 'F' sheet C-2. (Prior to installation, approve field location with Parks Project Inspector).
12. Install concrete walk per plan and City of Riverside standard drawing #325. Install curb per City of Riverside standard drawing #200 (Type I). Repair and patch damaged asphalt per City of Riverside standards.
13. Install concrete steps per detail 'I' sheet C-2.
14. Install play area curb per detail 'B' sheet C-3.
15. Install play area walk/curb per detail 'C' sheet C-3.
17. Install tree grate per detail 'E' sheet C-2 (typical of 14).
18. Install drinking fountain per details 'E', 'F', 'G' sheet C-3.
19. Existing fence, protect in place.
20. Install chain link fence per detail 'B' sheet C-4. Join to school fence @ end post.
21. Install basketball court per details 'A', 'I' sheet C-4.
22. Install retaining wall per detail 'D' sheet C-3.
23. Install entry monument signage per detail 'J' sheet C-2.
24. Install volleyball courts per detail 'G' sheet C-4.
25. Remove a portion of existing wall as shown on detail 'C' sheet C-4 and dispose of in a legal manner.
26. Saw cut and remove existing sidewalk in a legal manner. Install new concrete walk as shown on plan and per City of Riverside standard drawing #325. Protect existing concrete curb and handicap ramp in place.
27. Saw cut and remove existing sidewalk, curb and necessary amount of asphalt and dispose of in legal manner. Install driveway approach per City of Riverside standard drawing #302 (type 4).
28. Install 6" thick concrete walk per detail 'A', 'B' sheet C-2.
29. Electrical switch board enclosure per sheet E-1 and Detail '2', Sheet E-2.
30. Install removable bollard per detail 'H' sheet C-2.
31. Install wrought iron fence per detail 'G' sheet C-5.
32. Install wrought iron fence/wall per details 'I, J, K' sheet C-5. Contractor shall install wall/fence 18" from top of slope to center line of wall/fence. Match appearance of existing slump stone wall; materials shall be per details. Where side yard fencing occurs, contractor shall coordinate location of columns with both the residents and the parks project inspector.

asaf.ulg (9-87)

t. i. maloney, inc.
landscape architecture • planning
6180 Brockton Avenue, Suite 201 • Riverside, CA 92506
(714) 369-0700 fax (714) 369-4039

TAFT PARK
CITY OF RIVERSIDE
DEPARTMENT OF PARK AND RECREATION

SHEET DESCRIPTION:
CONSTRUCTION PLAN

REGISTERED LANDSCAPE ARCHITECT
TIMOTHY J. MALONEY NO. 2110
STATE OF CALIFORNIA
Signature
Date

DATE:	2/21/92
JOB NO.:	910308
DRAWN:	CN
CHECKED:	DG
REVISIONS:	

SCALE: 1" = 30' - 0"

C-1

3 OF 13

PLAN NO. P-0928

DRAWING NUMBER

TA-15

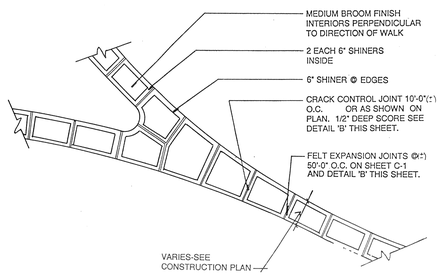

A CONCRETE PAVING - PLAN VIEW

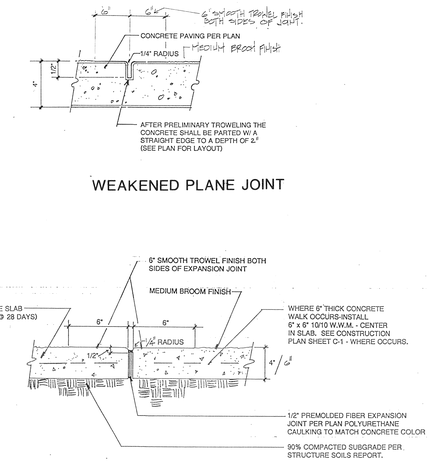

B EXPANSION/WEAKENED PLANE JOINT

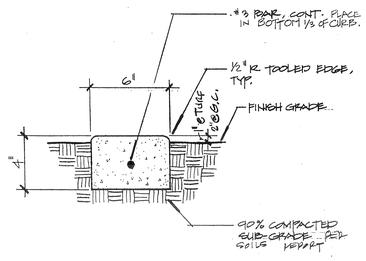

C CONCRETE MOW CURB

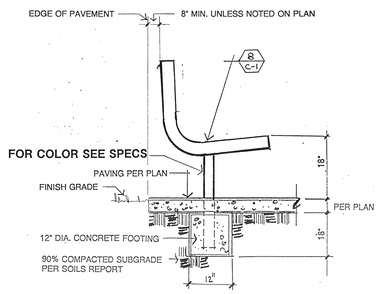

D BENCH

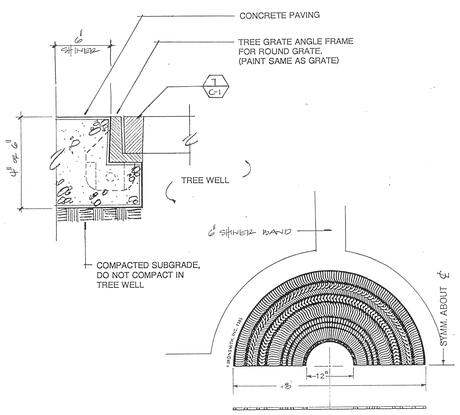

E TREE GRATE & FRAME

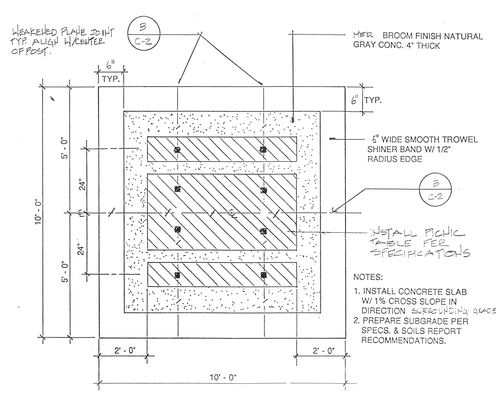

F PICNIC TABLE/CONCRETE PAD - PLAN

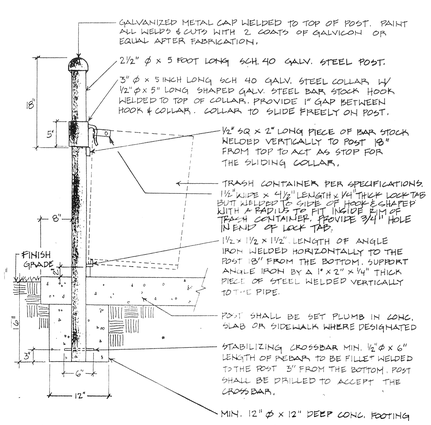

G TRASH RECEPTACLE

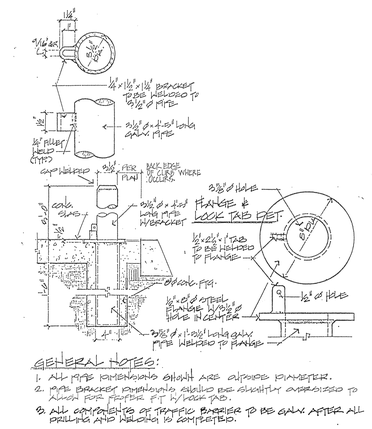

H REMOVABLE BOLLARD

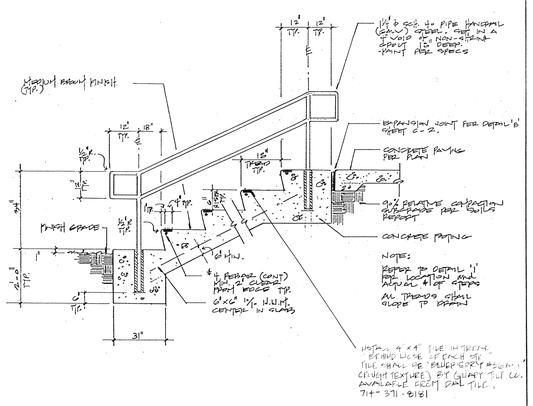

I CONCRETE STEPS @ PLAY AREA

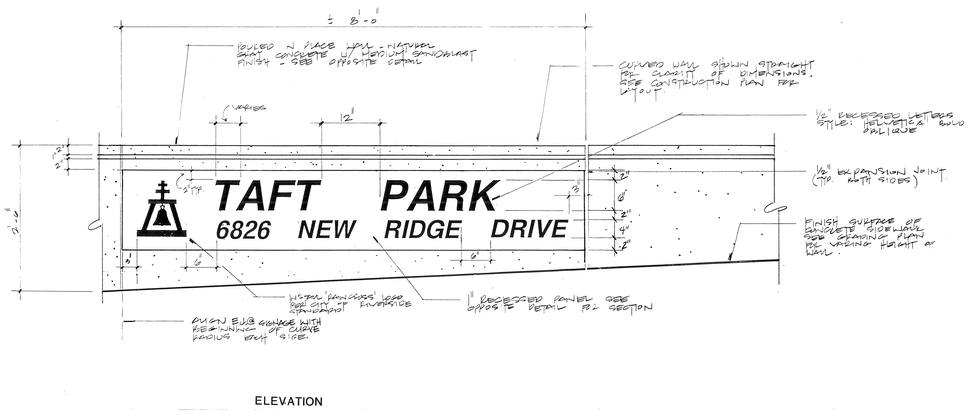

ELEVATION

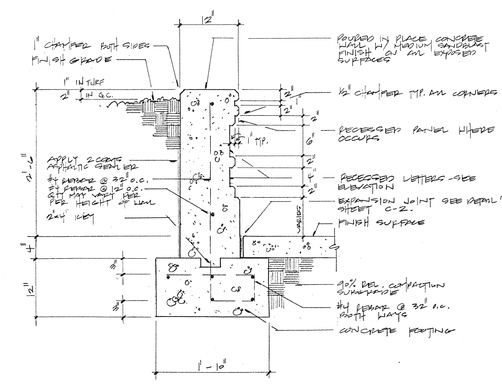

SECTION

SCALE: 1" = 1'-0"

J ENTRY MONUMENT SIGNAGE

t. i. maloney, inc.
landscape architecture • planning
6180 Brockton Avenue, Suite 201 • Riverside, CA 92506
(714) 369-0700 fax (714) 369-4039

TAFT PARK
CITY OF RIVERSIDE
DEPARTMENT OF PARK AND RECREATION

SHEET DESCRIPTION: CONSTRUCTION DETAILS

REGISTERED LANDSCAPE ARCHITECT
MONICA L. MALONEY NO. 3170
Signature
2-21-92
Date
STATE OF CALIFORNIA

DATE: 2/21/92
JOB NO.: 910308
DRAWN: R.W.
CHECKED: DG
REVISIONS:

N/A

SCALE: N.T.S.

C-2

DRAWING NUMBER

TA-14

NOTE:

INSTALL FIBAR PER SPECS

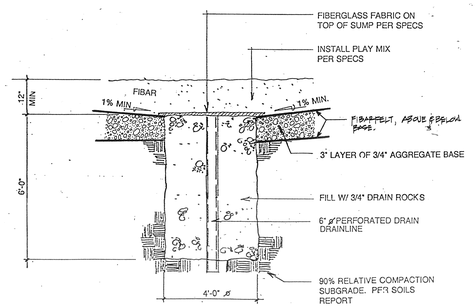

A PLAY AREA SUMP

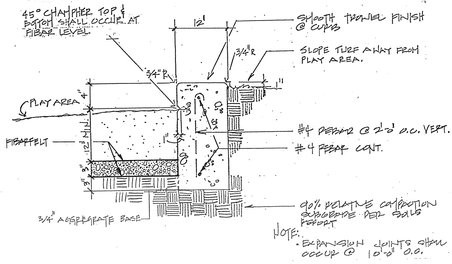

B PLAY AREA CURB

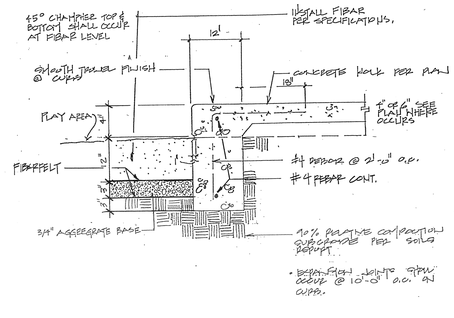

C PLAY AREA WALK/CURB

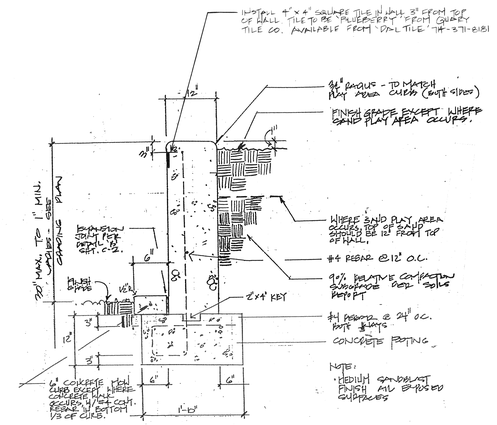

D RETAINING WALL @ PLAY AREA

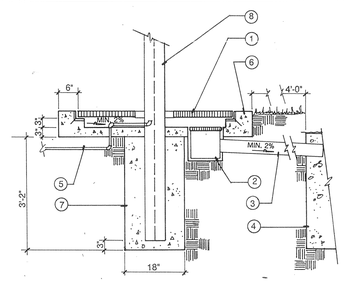

LEGEND

1. ALUMINUM TREE GRATE, MODEL #4811 ROUND W/GALVANIZED ANGLE IRON FRAME AS MANUFACTURED BY IRONSMITH INC. DESIGN 800-338-4766, BOLT DOWN. SUPPLY WITH GRATE FRAME
2. BROOKS #1212 CATCH BASIN WITH #1212 C.I. GRATE.
3. 4" DRAINLINE TO SUMP.
4. SUMP 3' x 3' x 3' FILLED WITH 3/4" ROCK & COVERED WITH FILTER CLOTH.
5. GALV. PIPE FROM SHUT OFF VALVE.
6. CONCRETE.
7. CONCRETE FOOTING.
8. DRINKING FOUNTAIN PER PLANS.

E DRINKING FOUNTAIN - INSTALLATION

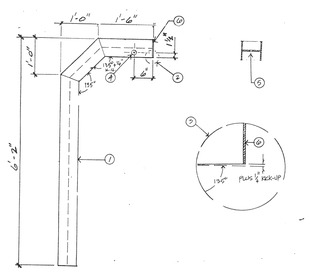

LEGEND

1. W6 "H" COLUMN - 15 LBS/FT 6 IN. DEPTH BY 6 IN. WIDTH. MITRE JOINT & WELD FULL PEN BUTT WELD, TYP. ALL WELDS. GRIND ALL WELDS FLUSH. HOT DIP GALV. ALL PARTS AFTER WELDING & GRINDING.
2. SEE ENLARGEMENT AT RIGHT FOR KICK-UP DETAIL.
3. KICK-UP 1/4" ABOVE HORIZONTAL DURING FABRICATION TO PROVIDE SLOPE FOR POSITIVE DRAINAGE TO SUMP.
4. CONTROL PUSH-BUTTON AND FLOW CONTROL SHALL BE MURDOCK SELF-CLOSING PUSH-BUTTON WITH VANDAL GUARD. WAKEFIELD CO. (714) 857-1238. BUTTON BODY: DRILL 1-1/4 IN. DIA. HOLE; GUARD; DRILL 2 NO. 25 PILOT HOLES & TAP TO ACCEPT 10/24 SCREWS TO ATTACH FLANGE. 1/2" FPT x 3/8" MPT GALV. REDUCER ON EACH SIDE (NOTE: "RIGHT-HAND" UNIT SHOWN).
5. CHROME POLISHED HAWS NO. 5708 (1/2" MIPS) BUBBLER HEAD, PHONE (213) 724-1120. DRILL WEB 29/32 IN. TO ACCEPT BUBBLER.
6. 1/4 IN. THICK STEEL PLATE, CONT. WELD TO ENDS OF "H". GRIND ALL WELDS FLUSH & SMOOTH.

F DRINKING FOUNTAIN - FABRICATION

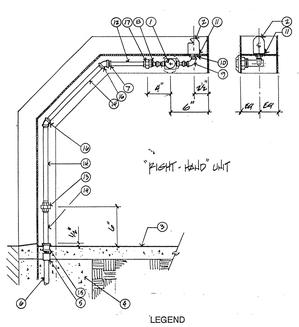

LEGEND

1. CONTROL PUSH-BUTTON AND FLOW CONTROL SHALL BE MURDOCK SELF-CLOSING PUSH-BUTTON WITH VANDAL GUARD. WAKEFIELD CO. (714) 857-1238. BUTTON BODY: DRILL 1-1/4 IN. DIA. HOLE; GUARD; DRILL 2 NO. 25 PILOT HOLES & TAP TO ACCEPT 10/24 SCREWS TO ATTACH FLANGE. 1/2" FPT x 3/8" MPT GALV. REDUCER ON EACH SIDE.
2. CHROME POLISHED HAWS NO. 5708 (1/2" MIPS) BUBBLER HEAD, PHONE (213) 724-1120. DRILL WEB 29/32 IN. TO ACCEPT BUBBLER. WATERPROOF MASTIC UNDER BUBBLER HEAD.
3. HARDSCAPE PER PLANS.
4. CONCRETE FOOTING
5. SCH 40 PVC 1" SLIP x 1" MPT PIPE ADAPTER
6. 1" SCH 40 PVC DOMESTIC SUPPLY LINE
7. 1" MPT x 3/4" FPT GALV. REDUCER
8. 3/4" MPT x 1/2" FPT GALV. REDUCER
11. MASTIC
12. 3/4" GALV. NIPPLE
13. 1" GALV. UNION
14. 1" GALV. NIPPLE
15. 1" GALV. COUPLING
16. 1" GALV. 45 COUPLING

G DRINKING FOUNTAIN - PLUMBING

H

NOTES:

1. INSTALL PLAY AREA SUMPS PER DETAIL 'A' THIS SHEET. INSTALL SUMPS AS SHOWN ON GRADING PLAN SHEET G-1.
2. SEE CONSTRUCTIN PLAN, SHEET C-1 FOR LOCATION OF REF. PT. 'A' AND 'B'.
3. CONTRACTOR SHALL STAKE ALL LOCATIONS OF PLAY EQUIPMENT FOR APPROVAL FROM CITY PARKS REPRESENTATIVE PRIOR TO INSTALLATION.

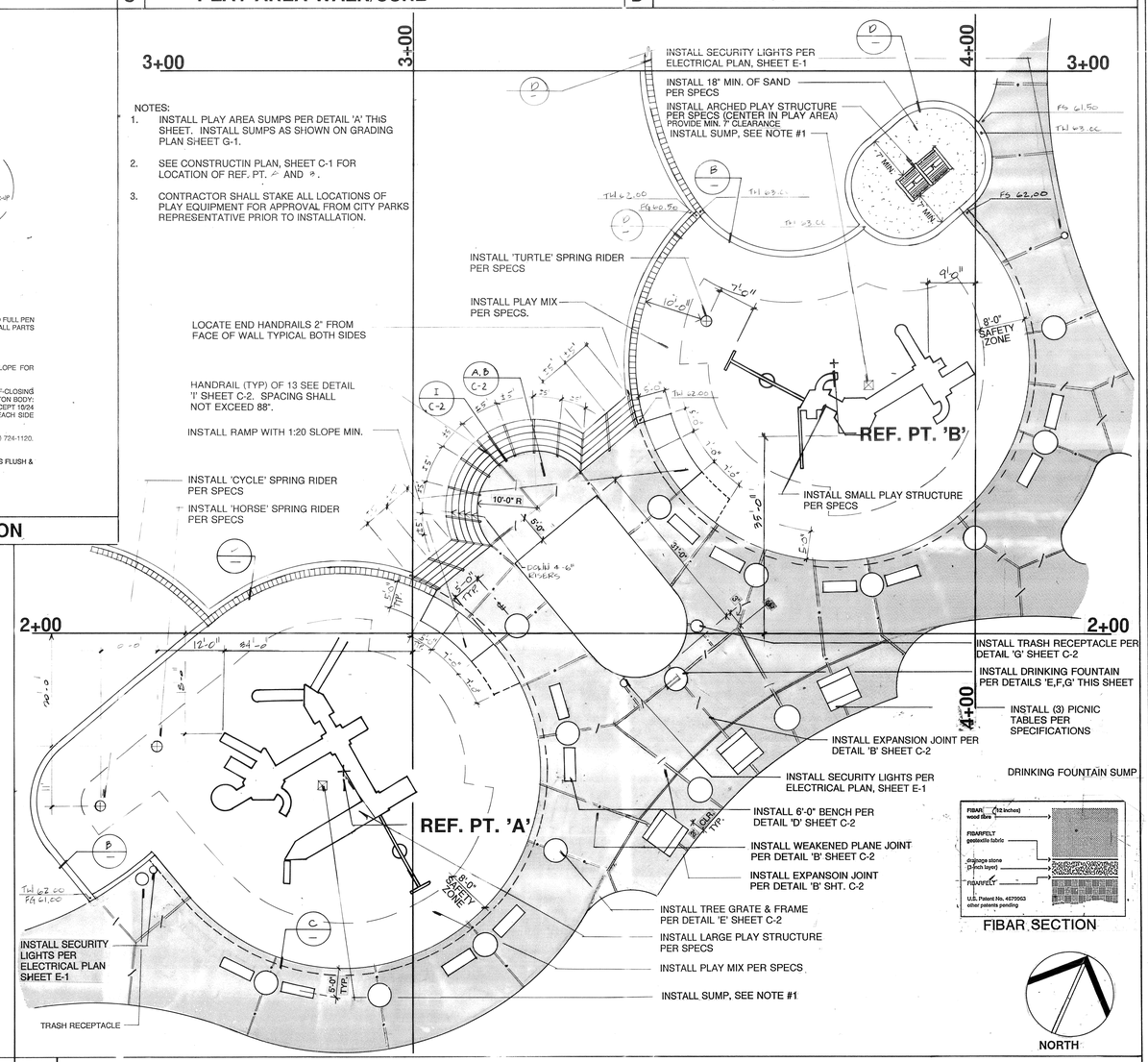

I PLAY AREA ENLARGEMENT

SCALE 1"=10'-0"

t. i. maloney, inc.
landscape architecture • planning
6180 Brockton Avenue, Suite 201 • Riverside, CA 92506
(714) 369-0700 fax (714) 369-4039

TAFT PARK
CITY OF RIVERSIDE
DEPARTMENT OF PARK AND RECREATION

SHEET DESCRIPTION: CONSTRUCTION DETAILS

REGISTERED LANDSCAPE ARCHITECT TIMOTHY L. MALONEY No. 2170 STATE OF CALIFORNIA

DATE:	2/21/92
JOB NO.:	910308
DRAWN:	R.W.
CHECKED:	DG
REVISIONS:	

N/A

SCALE:

C-3

5 OF 13

PLAN NO. P-0928

DRAWING NUMBER

TA-13

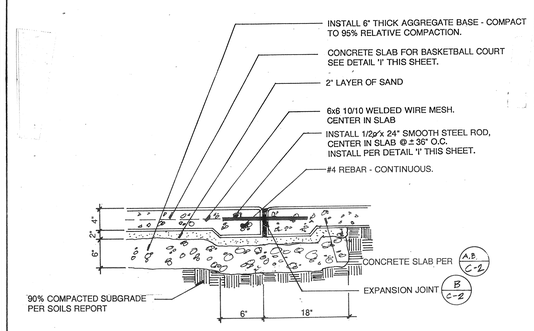

A **BASKETBALL COURT** ADDITIVE ALTERNATE #3C

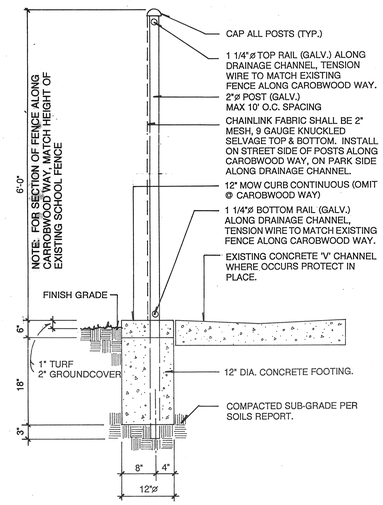

B **CHAINLINK FENCE**

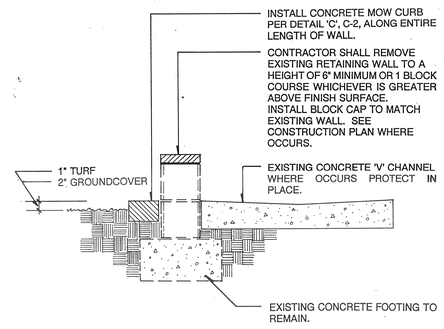

C **EXISTING WALL @ DRAINAGE CHANNEL**

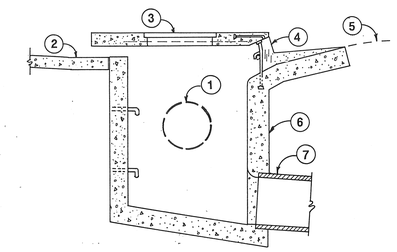

LEGEND

1. CONNECT PROPOSED 18" PVC DRAINLINE TO EXISTING CATCH BASIN BY CORING HOLE THROUGH SIDE OF BASIN.
2. EXISTING CONCRETE DRAINAGE SWALE
3. EXISTING MANHOLE
4. EXISTING CURB INLET
5. EXISTING NEW RIDGE DRIVE FINISH SURFACE
6. EXISTING CATCH BASIN
7. EXISTING DRAIN PIPE

D **CATCH BASIN CONNECTION**

E

F

FSE = FINISH SAND ELEVATION

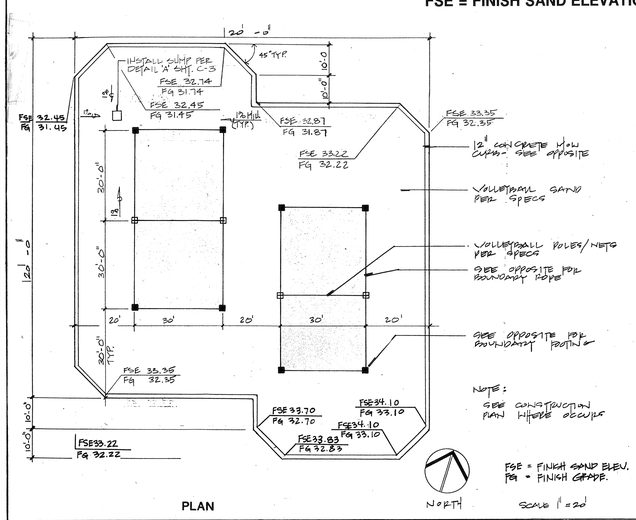

PLAN

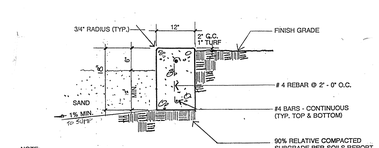

12" CONCRETE MOW CURB

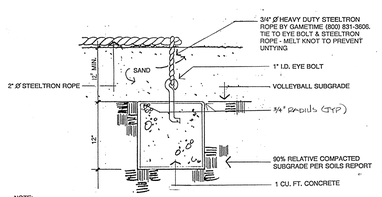

CONCRETE FOOTING @ BOUNDARY ROPE LOCATION

G **VOLLEYBALL COURTS** ADDITIVE ALTERNATE #3B

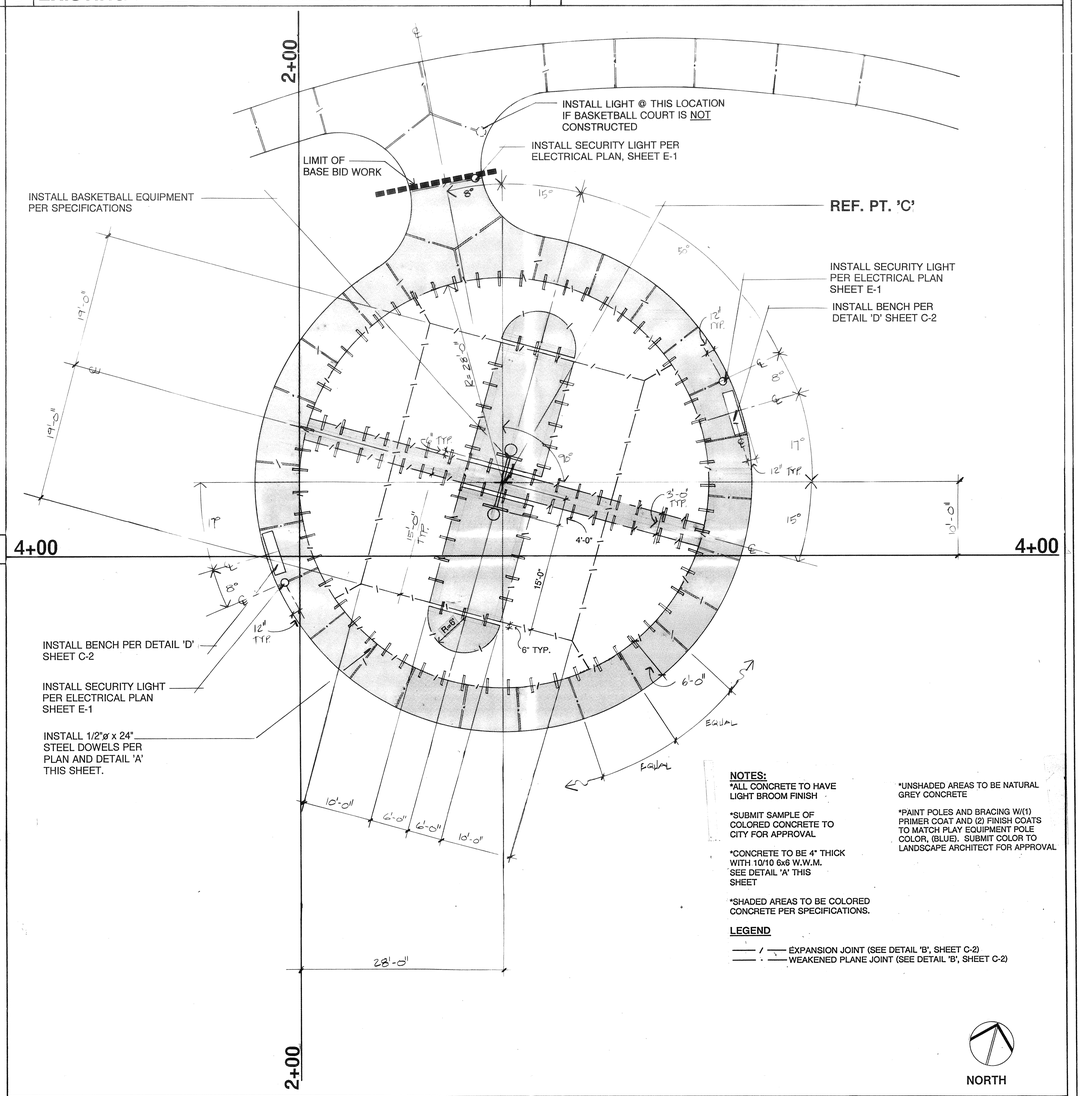

NOTES:

*ALL CONCRETE TO HAVE LIGHT BROOM FINISH

*SUBMIT SAMPLE OF COLORED CONCRETE TO CITY FOR APPROVAL

*CONCRETE TO BE 4" THICK WITH 10/10 6x6 W.W.M. SEE DETAIL 'A' THIS SHEET

*SHADED AREAS TO BE COLORED CONCRETE PER SPECIFICATIONS.

*UNSHADED AREAS TO BE NATURAL GREY CONCRETE

*PAINT POLES AND BRACING W/(1) PRIMER COAT AND (2) FINISH COATS TO MATCH PLAY EQUIPMENT POLE COLOR, (BLUE). SUBMIT COLOR TO LANDSCAPE ARCHITECT FOR APPROVAL

LEGEND

—— / —— EXPANSION JOINT (SEE DETAIL 'B', SHEET C-2)
—— · —— WEAKENED PLANE JOINT (SEE DETAIL 'B', SHEET C-2)

I **BASKETBALL COURT ENLARGEMENT** ADDITIVE ALTERNATE #3C SCALE: 1/8" = 1'-0"

t. i. maloney, inc.
landscape architecture • planning
6180 Brockton Avenue, Suite 201 • Riverside, CA 92506
(714) 369-0700 fax (714) 369-4039

TAFT PARK
CITY OF RIVERSIDE
DEPARTMENT OF PARK AND RECREATION

SHEET DESCRIPTION: **CONSTRUCTION DETAILS**

REGISTERED LANDSCAPE ARCHITECT TIMOTHY J. MALONEY NO. 2110 Signature 2-21-92 Date STATE OF CALIFORNIA

DATE:	2/21/92
JOB NO.:	910308
DRAWN:	R.W.
CHECKED:	DG
REVISIONS:	

N/A

SCALE: N/A

C-4

PLAN NO. P-0928

DRAWING NUMBER

TA-12

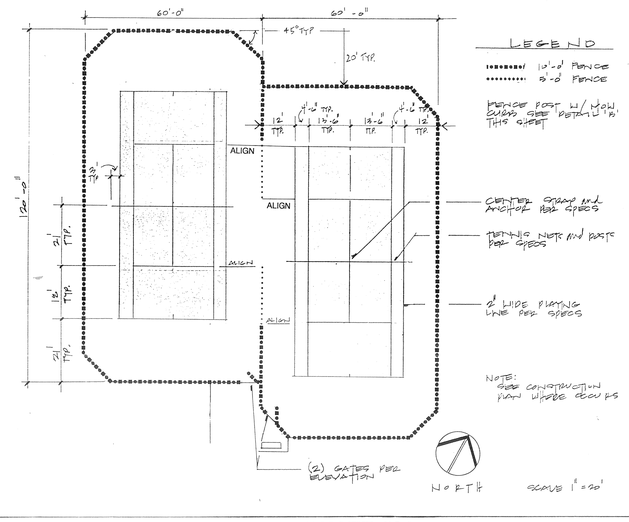

A Tennis Courts - ADDITIVE ALTERNATE #3A

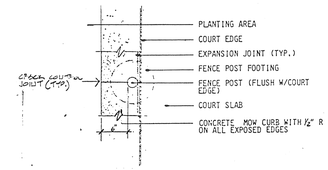

FENCE POST-SECTION

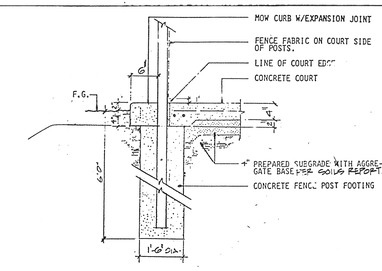

FENCE POST WITH MOW CURB

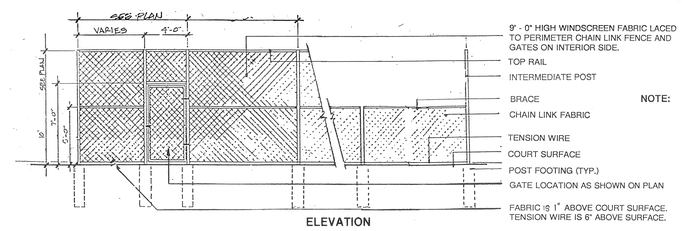

NOTE: SEE SPECIFICATIONS FOR SIZES OF MATERIALS.

ELEVATION

B Chain Link Fence - ADDITIVE ALTERNATE #3A

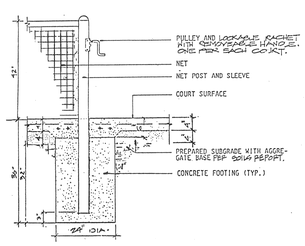

NET POST FOOTING

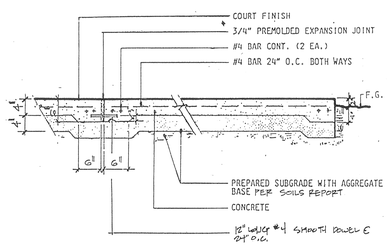

CONCRETE COURT

C Tennis Court Paving - ADDITIVE ALTERNATE #3A

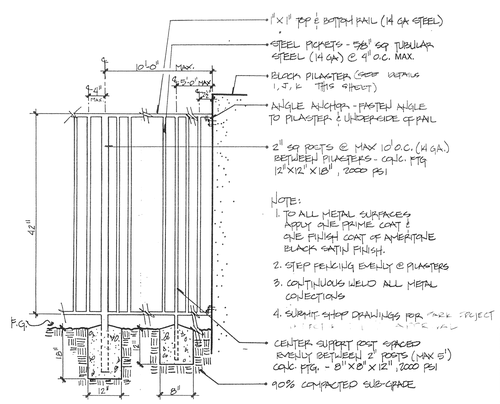

G Wrought Iron Fence

H

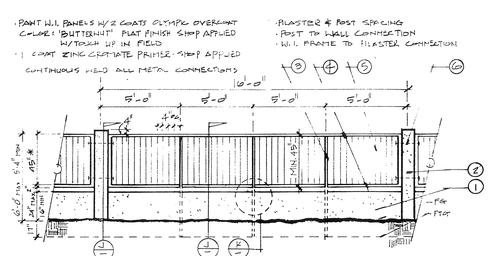

1. SLUMP BLOCK WALL (CORO LA PAZ) 6x4x16 SOLID GROUT ALL CELLS
2. SLUMP BLOCK PILASTER W/DECORATIVE CAP (CORO "LA PAZ")
3. POSTS 1½" SQ TUBULAR STEEL 0.125 WALL THICKNESS. EXTEND POSTS INTO FOOTINGS.
4. TOP & BOTTOM RAILS 1½" SQ TUBULAR STEEL 0.125 WALL THICKNESS. MINIMUM VERTICAL DISTANCE IS 48".
5. PICKETS ⅝" SQ. TUBULAR STEEL 0.065 WALL THICKNESS MAX. HORIZONTAL DIMENSION BETWEEN PICKETS SHALL NOT EXCEED 4" SUCH THAT A 4" SPHERE WILL NOT PASS BETWEEN PICKETS. (TO MEET SWIMMING POOL FENCE REQUIREMENTS.)
6. ½" Φ STEEL THROUGH-BOLT W/ HEX NUT TACK WELDED TO BOLT & FENCE EACH END.

* MIN. 45" DIMENSION BETWEEN TOP OF TRIPANEL AND TOP OF BOTTOM RAIL TO MEET SWIMMING POOL FENCE REQUIREMENTS.

NOTE: CONTRACTOR SHALL SUBMIT SHOP DRAWINGS FOR THE APPROVAL OF THE PARK & REC. DEPT. DRAWINGS ARE TO SHOW DETAILING OF W.I. CONNECTIONS TO BLOCK, SHOWING CONTINUOUS WALL PROFILE PLOTTED W/ADJACENT LOT LINES & SHALL SHOW ALL WALL STEP LOCATIONS.

I Wall/Fence - elevation

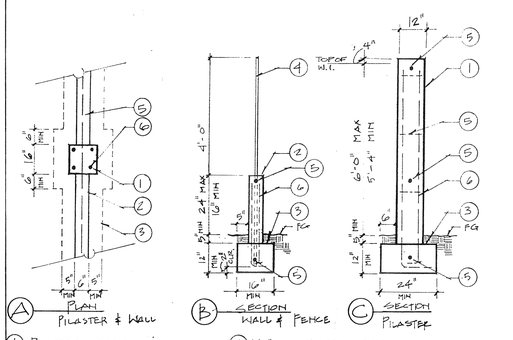

1. PILASTER - SLUMP BLOCK 12x4x12 SOLID GROUT ALL CELLS
2. WALL - SLUMP BLOCK 6x4x16 SOLID GROUT ALL CELLS
3. CONC. FTG
4. W.I. FENCE POST INSTALLED IN FTG.
5. #4 REBAR CONT. (HORIZ) (CAGE @ PILASTER)
6. 4-#4 REBAR W/STD. HOOK IN FTG. (VERT.)
7. ½" Φ x 6" J-BOLT SET IN GROUT WELDED TO BASE PLATE (SEE DETAILS B & C SHEET 3 OF 3)

J Wall/Fence - sections

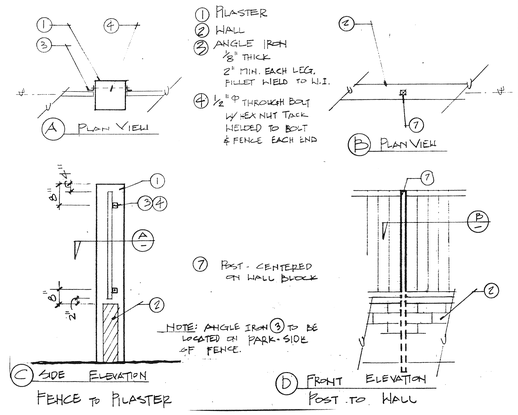

K Wall/Fence - connections

L

t. i. maloney, inc.
landscape architecture • planning
6180 Brockton Avenue, Suite 201 • Riverside, CA 92506
(714) 369-0700 fax (714) 369-4039

TAFT PARK
CITY OF RIVERSIDE
DEPARTMENT OF PARK AND RECREATION

SHEET DESCRIPTION
CONSTRUCTION DETAILS

REGISTERED LANDSCAPE ARCHITECT
TIMOTHY I. MALONEY NO. 1210
Signature 2-21-92 Date
STATE OF CALIFORNIA

DATE 2/21/92
JOB NO. 910308
DRAWN R.W.
CHECKED DG
REVISIONS

N/A

SCALE N/A

C-5

7 OF 13

PLAN NO. P-0928

DRAWING NUMBER TA-19

TAFT ELEMENTARY SCHOOL

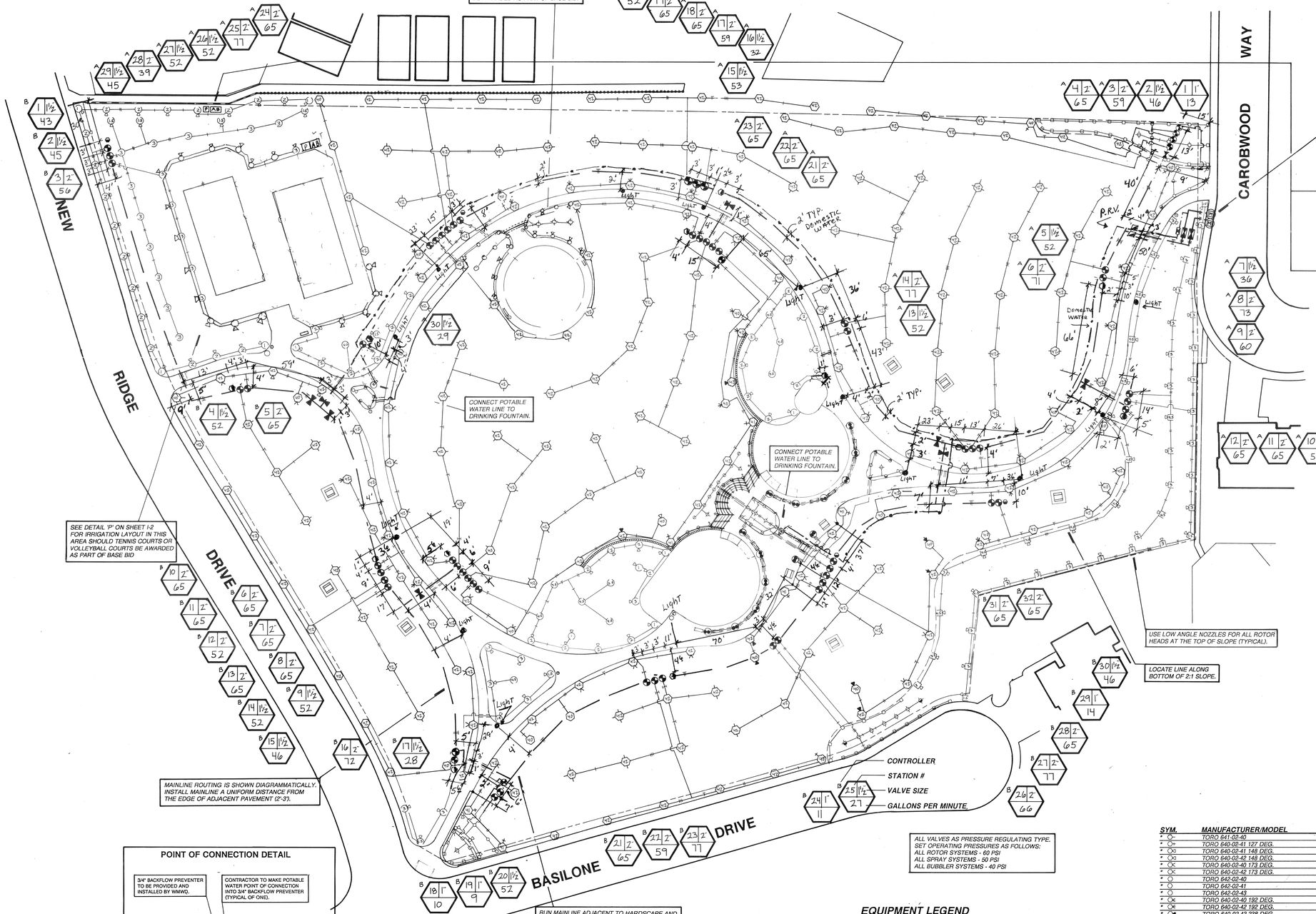

ONE (1) 2" WATER METER IS EXISTING, THE SECOND 2" WATER METER WILL BE PROVIDED AND INSTALLED BY WESTERN MUNICIPAL WATER DISTRICT. TWO (2) 2" WILKINS 575BS REDUCED PRESSURE BACKFLOW PREVENTERS WITH 2" WILKINS 500 SERIES PRESSURE REGULATORS FOR IRRIGATION AND ONE (1) 3/4" WILKINS 575BS REDUCED PRESSURE BACKFLOW PREVENTER WITH 3/4" WILKINS 500 SERIES PRESSURE REGULATOR FOR POTABLE WATER TO BE PROVIDED AND INSTALLED BY WESTERN MUNICIPAL WATER DISTRICT (SEE POC DETAIL THIS SHEET). CITY TO PAY ALL ASSOCIATED FEES. IRRIGATION POINT OF CONNECTION TO BE INTO THE TWO (2) 2" BACKFLOW PREVENTERS AND THE POTABLE POINT OF CONNECTION TO BE INTO THE 3/4" BACKFLOW PREVENTER (VERIFY LOCATIONS IN FIELD). MINIMUM STATIC PRESSURE AT POC IS 93 PSI. MAXIMUM DEMAND ON SYSTEM IS 150 GPM. SET IRRIGATION PRESSURE REGULATOR TO 80 PSI. SER POTABLE WATER PRESSURE REGULATOR TO 50 PSI.

PHONE LINK CONCENTRATOR TO BE PTS SA-16-PLC-OEM. INSTALL PER MANUFACTURER'S AND PTS' SPECIFICATIONS. CONTACT PTS AT TIME OF INSTALLATION FOR AID IN HOOK-UP. LOCATE ADJACENT TO CONTROLLERS. SEE ELECTRICAL PLANS FOR TELEPHONE SERVICE TO PLC. COORDINATE TELEPHONE SERVICE TO PLC. INSTALL 1 1/2" CONDUIT FROM PLC TO CONTROLLERS FOR COMMUNICATION CABLE BETWEEN PLC AND CONTROLLERS. USE P71620-1 CABLE FOR COMMUNICATION LINK. SEE ELECTRICAL PLANS FOR 120V POWER CONNECTION. CONTRACTOR TO MAKE ALL CONNECTIONS.

CONTROLLERS TO BE PACIFIC TECHNICAL SERVICES (PTS) SA-26-32/32/2RRA/RSE/OEM. INSTALL ALL EQUIPMENT PER MANUFACTURER'S AND PTS' SPECIFICATIONS. CONTACT PTS AT TIME OF INSTALLATION FOR AID IN HOOK-UP. FINAL CONTROLLER LOCATION TO BE DETERMINED IN FIELD BY AUTHORIZED CITY REPRESENTATIVE. SEE ELECTRICAL PLANS FOR 120V POWER TO CONTROLLER LOCATION. CONTRACTOR TO MAKE ALL CONNECTIONS.

CONTACT PTS FOR TECHNICAL ASSISTANCE WITH ALL WORK ASSOCIATED WITH THE TORO NETWORK 8000 CONTROL SYSTEM.

PACIFIC TECHNICAL SERVICES
23421 SOUTH POINTE DRIVE.
SUITE 250
LAGUNA HILLS, CA 92653
(714) 837-4737
CONTACT : BRUCE WATSON

SEE SHEET I-2 FOR IRRIGATION DETAILS.

ALL VALVES AS PRESSURE REGULATING TYPE.
SET OPERATING PRESSURES AS FOLLOWS:
ALL ROTOR SYSTEMS - 60 PSI
ALL SPRAY SYSTEMS - 50 PSI
ALL BUBBLER SYSTEMS - 40 PSI

POINT OF CONNECTION DETAIL

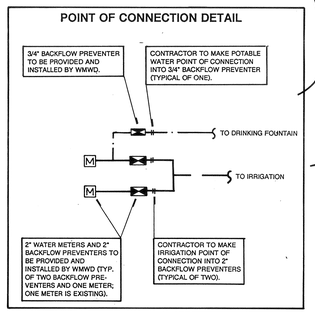

EQUIPMENT LEGEND

SYM.	MANUFACTURER/MODEL	DESCRIPTION	SIZE	DETAIL
**	BY WMWD	WATER METER	2"	N/A
**	WILKINS 575BS WITH 500 SERIES	REDUCED PRESSURE BACKFLOW PREVENTER	2"	N/A
**	WILKINS 575BS WITH 500 SERIES	REDUCED PRESSURE BACKFLOW PREVENTER	3/4"	N/A
	NIBCO T-113	BRONZE GATE VALVE	LINE SIZE	'E'
	RAINBIRD #44LRC	QUICK COUPLING VALVE	1"	'D'
	GRISWOLD 2230 SERIES	PRESSURE REGULATING CONTROL VALVE	PLAN SIZE	'B'
A B	SA-26-32/32/2RRA/RSE/OEM	AUTOMATIC IRRIGATION CONTROLLER	32 STATION	'A'
P	SA-16-PLC/OEM	PHONE LINK CONCENTRATOR	N/A	N/A
	APPROVED	CLASS 315 PVC MAINLINE	PLAN SIZE	'F'
	APPROVED	SCH 40 PVC POTABLE WATER MAINLINE	PLAN SIZE	'F'
	APPROVED	CLASS 200 PVC LATERAL LINE	PLAN SIZE	'F'
	APPROVED	SCH 40 PVC PIPE/WIRE SLEEVE	PLAN SIZE	'G'
NOT SHOWN	APPROVED	UF DIRECT BURIAL CONTROL WIRE	PER SPECS	'I'

** WATER METERS AND BACKFLOW PREVENTERS TO BE PROVIDED AND INSTALLED BY WESTERN MUNICIPAL WATER DISTRICT.

SPRINKLER LEGEND

SYM.	MANUFACTURER/MODEL	DESCRIPTION	NOZZLE	RADIUS	GPM	PSI	DETAIL
*	TORO 611-02-40	LARGE TURF AREA ROTOR HEAD	40	40'-45'	6.7	50	'J'
*	TORO 640-02-41 127 DEG.		41	40'-45'	10.2	50	'J'
*	TORO 640-02-41 148 DEG.		41	40'-45'	10.2	50	'J'
*	TORO 640-02-42 148 DEG.		42	40'-45'	12.9	50	'J'
*	TORO 640-02-40 173 DEG.		40	40'-45'	6.7	50	'J'
*	TORO 640-02-42 173 DEG.		42	40'-45'	12.9	50	'J'
*	TORO 642-02-40		40	40'-45'	6.7	50	'J'
*	TORO 642-02-41		41	40'-45'	10.2	50	'J'
*	TORO 642-02-43		42	40'-45'	12.9	50	'J'
*	TORO 640-02-40 192 DEG.		40	40'-45'	6.7	50	'J'
*	TORO 640-02-42 192 DEG.		42	40'-45'	12.9	50	'J'
*	TORO 640-02-43 238 DEG.		42	40'-45'	12.9	50	'J'
*	TORO 643-02-42		42	40'-45'	12.9	50	'J'
*	TORO 644-02-42		42	40'-45'	12.9	50	'J'
*	TORO 570C-PC-1.0-RUBBER COVER	MEDIUM TURF AREA ROTOR HEAD	1.0	20'-30'	1.2	50	'J'
*	TORO 570C-PC-1.5-RUBBER COVER		1.5	20'-30'	1.8	50	'J'
*	TORO 570C-PC-2.0-RUBBER COVER		2.0	20'-30'	2.1	50	'J'
*	TORO 570C-PC-3.0-RUBBER COVER		3.0	20'-30'	3.5	50	'J'
*	TORO 570C-FC-3.0-RUBBER COVER		4.5	20'-30'	4.2	50	'J'
*	TORO 570C-FC-4.5-RUBBER COVER		4.5	20'-30'	4.2	50	'J'
*	TORO 570HP-PC-1.5	SHRUB HI-POP ROTOR HEAD	1.5	20'-35'	1.6	50	'K'
*	TORO 570HP-PC-3.0		3.0	20'-35'	3.5	50	'K'
*	TORO 570HP-PC-4.5		4.5	20'-35'	4.2	50	'K'
	TORO 570C-4P-CV-10-QLA-PC	SMALL TURF AREA SPRAY HEAD	10-QLA-PC	10'	0.5	30	'J'
	TORO 570C-4P-CV-10-HLA-PC		10-HLA-PC	10'	0.9	30	'J'
	TORO 570C-4P-CV-10-FLA-PC		10-FLA-PC	10'	1.8	30	'J'
	TORO 570C-4P-CV-15-120-PCD1.0		15-120-PCD1.0112'		1.0	30	'J'
	TORO 570C-4P-CV-15-H-PCD1.4		15-H-PCD1.4	12'	1.4	30	'J'
	TORO 570C-4P-CV-15-F-PCD3.0		15-F-PCD3.0	12'	3.0	30	'J'
	TORO 570C-4P-CV-15-H-PC		15-H-PC	15''	1.9	30	'J'
	TORO 570C-4P-CV-15-F-PC		15-F-PC	15'	3.9	30	'J'
	TORO 570C-4P-CV-ADJ-PC		ADJ-PC	VAR.	VAR.	30	'J'
	TORO 570C-12P-CV-10-QLA-PC	SHRUB HI-POP SPRAY HEAD	10-QLA-PC	10'	0.5	30	'K'
	TORO 570C-12P-CV-10-HLA-PC		10-HLA-PC	10'	0.9	30	'K'
	TORO 570C-12P-CV-10-F-PC		10-F-PC	10'	1.8	30	'K'
	TORO 570C-12P-CV-15-H-PCD1.4		15-H-PCD1.4	12'	1.4	30	'K'
	TORO 570C-12P-CV-15-F-PCD3.0		15-F-PCD3.0	12'	3.0	30	'K'
	TORO 570C-12P-CV-15-Q-PC		15-Q-PC	15'	1.0	30	'K'
	TORO 570C-12P-CV-15-H-PC		15-H-PC	15'	1.9	30	'K'
	TORO 570C-12P-CV-15-F-PC		15-F-PC	15'	3.9	30	'K'
	TORO 570C-12P-CV-ADJ-PC		ADJ-PC	VAR.	VAR.	30	'K'
	TORO 514-20 ADJUSTABLE BUBBLER	BUBBLER FOR TREE WELLS	N/A	N/A	0.5	30	'N'

* NOZZLE NUMBER FOR ALL ROTOR HEADS IS SHOWN IN SYMBOL ON DRAWINGS.

ADJUST TO ±0.5 GPM

Underground Service Alert
Call: TOLL FREE
1-800 422-4133
TWO WORKING DAYS BEFORE YOU DIG

PIPE SIZING CHART
3/4"
1"
1 1/4"
1 1/2"
2"
2 1/2"
3"
4"

SLEEVING CHART		
# WIRES	PIPE SIZE	SLEEVE SIZE
1-8	3/4"	1 1/2" SCH 40
9-15	1"	2" SCH 40
16-25	1 1/4"	2 1/2" SCH 40
26-35	1 1/2"	3" SCH 40
36-50	2"-2 1/2"	4" SCH 40
51-80	3"-4"	6" SCH 40
81-110	6"-8"	10" SCH 40

t. i. maloney, inc.
landscape architecture • planning
6180 Brockton Avenue, Suite 201 • Riverside, CA 92506
(714) 369-0700 fax (714) 369-4039

TAFT PARK
CITY OF RIVERSIDE
DEPARTMENT OF PARK AND RECREATION

SHEET DESCRIPTION: IRRIGATION PLAN "AS-BUILT"

REGISTERED LANDSCAPE ARCHITECT
TIMOTHY J. MALONEY, NO. 2175
STATE OF CALIFORNIA

DATE:	2/21/92
JOB NO.:	910308
DRAWN:	RD
CHECKED:	DG
REVISIONS:	

SCALE: 1" = 30' - 0"

I-1

8 OF 13

PLAN NO. P-0928

DRAWING NUMBER

TA-11

TAFT ELEMENTARY SCHOOL

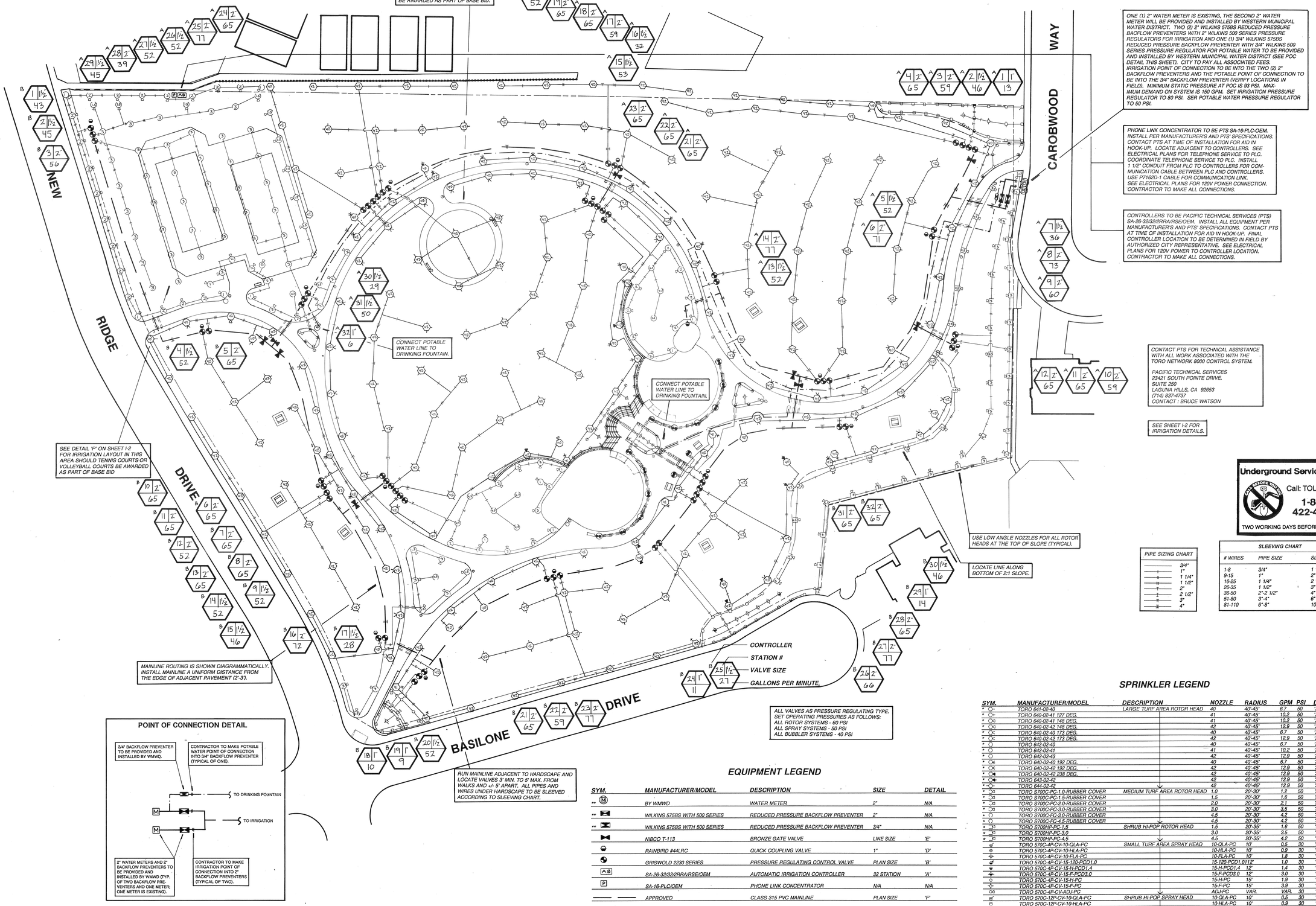

ONE (1) 2" WATER METER IS EXISTING, THE SECOND 2" WATER METER WILL BE PROVIDED AND INSTALLED BY WESTERN MUNICIPAL WATER DISTRICT. TWO (2) 2" WILKINS 575BS REDUCED PRESSURE BACFLOW PREVENTERS WITH 2" WILKINS 500 SERIES PRESSURE REGULATORS FOR IRRIGATION AND ONE (1) 3/4" WILKINS 575BS REDUCED PRESSURE BACKFLOW PREVENTER WITH 3/4" WILKINS 500 SERIES PRESSURE REGULATOR FOR POTABLE WATER TO BE PROVIDED AND INSTALLED BY WESTERN MUNICIPAL WATER DISTRICT (SEE POC DETAIL THIS SHEET). CITY TO PAY ALL ASSOCIATED FEES. IRRIGATION POINT OF CONNECTION TO BE INTO THE TWO (2) 2" BACKFLOW PREVENTERS AND THE POTABLE POINT OF CONNECTION TO BE INTO THE 3/4" BACKFLOW PREVENTER (VERIFY LOCATIONS IN FIELD). MINIMUM STATIC PRESSURE AT POC IS 93 PSI. MAXIMUM DEMAND ON SYSTEM IS 150 GPM. SET IRRIGATION PRESSURE REGULATOR TO 80 PSI. SER POTABLE WATER PRESSURE REGULATOR TO 50 PSI.

PHONE LINK CONCENTRATOR TO BE PTS SA-16-PLC-OEM. INSTALL PER MANUFACTURER'S AND PTS' SPECIFICATIONS. CONTACT PTS AT TIME OF INSTALLATION FOR AID IN HOOK-UP. LOCATE ADJACENT TO CONTROLLERS. SEE ELECTRICAL PLANS FOR TELEPHONE SERVICE TO PLC. COORDINATE TELEPHONE SERVICE TO PLC. INSTALL 1 1/2" CONDUIT FROM PLC TO CONTROLLERS FOR COMMUNICATION CABLE BETWEEN PLC AND CONTROLLERS. USE P7162D-1 CABLE FOR COMMUNICATION LINK. SEE ELECTRICAL PLANS FOR 120V POWER CONNECTION. CONTRACTOR TO MAKE ALL CONNECTIONS.

CONTROLLERS TO BE PACIFIC TECHNICAL SERVICES (PTS) SA-26-32/32/2RRA/RSE/OEM. INSTALL ALL EQUIPMENT PER MANUFACTURER'S AND PTS' SPECIFICATIONS. CONTACT PTS AT TIME OF INSTALLATION FOR AID IN HOOK-UP. FINAL CONTROLLER LOCATION TO BE DETERMINED IN FIELD BY AUTHORIZED CITY REPRESENTATIVE. SEE ELECTRICAL PLANS FOR 120V POWER TO CONTROLLER LOCATION. CONTRACTOR TO MAKE ALL CONNECTIONS.

CONTACT PTS FOR TECHNICAL ASSISTANCE WITH ALL WORK ASSOCIATED WITH THE TORO NETWORK 8000 CONTROL SYSTEM.

PACIFIC TECHNICAL SERVICES
23421 SOUTH POINTE DRIVE.
SUITE 250
LAGUNA HILLS, CA 92653
(714) 837-4737
CONTACT : BRUCE WATSON

SEE SHEET I-2 FOR IRRIGATION DETAILS.

MAINLINE ROUTING IS SHOWN DIAGRAMMATICALLY. INSTALL MAINLINE A UNIFORM DISTANCE FROM THE EDGE OF ADJACENT PAVEMENT (2'-3').

POINT OF CONNECTION DETAIL

EQUIPMENT LEGEND

SYM.	MANUFACTURER/MODEL	DESCRIPTION	SIZE	DETAIL
**	BY WMWD	WATER METER	2"	N/A
**	WILKINS 575BS WITH 500 SERIES	REDUCED PRESSURE BACKFLOW PREVENTER	2"	N/A
**	WILKINS 575BS WITH 500 SERIES	REDUCED PRESSURE BACKFLOW PREVENTER	3/4"	N/A
	NIBCO T-113	BRONZE GATE VALVE	LINE SIZE	'E'
	RAINBIRD #44LRC	QUICK COUPLING VALVE	1"	'D'
	GRISWOLD 2230 SERIES	PRESSURE REGULATING CONTROL VALVE	PLAN SIZE	'B'
AB	SA-26-32/32/2RRA/RSE/OEM	AUTOMATIC IRRIGATION CONTROLLER	32 STATION	'A'
P	SA-16-PLC/OEM	PHONE LINK CONCENTRATOR	N/A	N/A
	APPROVED	CLASS 315 PVC MAINLINE	PLAN SIZE	'F'
	APPROVED	SCH 40 PVC POTABLE WATER MAINLINE	PLAN SIZE	'F'
	APPROVED	CLASS 200 PVC LATERAL LINE	PLAN SIZE	'F'
	APPROVED	SCH 40 PVC PIPE/WIRE SLEEVE	PLAN SIZE	'G'
NOT SHOWN	APPROVED	UF DIRECT BURIAL CONTROL WIRE	PER SPECS	'I'

** WATER METERS AND BACKFLOW PREVENTERS TO BE PROVIDED AND INSTALLED BY WESTERN MUNICIPAL WATER DISTRICT.

SPRINKLER LEGEND

SYM.	MANUFACTURER/MODEL	DESCRIPTION	NOZZLE	RADIUS	GPM	PSI	DETAIL
*	TORO 641-02-40	LARGE TURF AREA ROTOR HEAD	40	40'-45'	6.7	50	'J'
*	TORO 640-02-41 127 DEG.		41	40'-45'	10.2	50	'J'
*	TORO 640-02-41 148 DEG.		41	40'-45'	10.2	50	'J'
*	TORO 640-02-42 148 DEG.		42	40'-45'	12.9	50	'J'
*	TORO 640-02-40 173 DEG.		40	40'-45'	6.7	50	'J'
*	TORO 640-02-42 173 DEG.		42	40'-45'	12.9	50	'J'
*	TORO 642-02-40		40	40'-45'	6.7	50	'J'
*	TORO 642-02-41		41	40'-45'	10.2	50	'J'
*	TORO 642-02-43		42	40'-45'	12.9	50	'J'
*	TORO 640-02-40 192 DEG.		40	40'-45'	6.7	50	'J'
*	TORO 640-02-42 192 DEG.		42	40'-45'	12.9	50	'J'
*	TORO 640-02-42 238 DEG.		42	40'-45'	12.9	50	'J'
*	TORO 643-02-42		42	40'-45'	12.9	50	'J'
*	TORO 644-02-42		42	40'-45'	12.9	50	'J'
*	TORO 5700C-PC-1.0-RUBBER COVER	MEDIUM TURF AREA ROTOR HEAD	1.0	20'-30'	1.2	50	'J'
*	TORO 5700C-PC-1.5-RUBBER COVER		1.5	20'-30'	1.6	50	'J'
*	TORO 5700C-PC-2.0-RUBBER COVER		2.0	20'-30'	2.1	50	'J'
*	TORO 5700C-PC-3.0-RUBBER COVER		3.0	20'-30'	3.5	50	'J'
*	TORO 5700C-FC-3.0-RUBBER COVER		4.5	20'-30'	4.2	50	'J'
*	TORO 5700C-FC-4.5-RUBBER COVER		4.5	20'-30'	4.2	50	'J'
*	TORO 5700HP-PC-1.5	SHRUB HI-POP ROTOR HEAD	1.5	20'-35'	1.6	50	'K'
*	TORO 5700HP-PC-3.0		3.0	20'-35'	3.5	50	'K'
*	TORO 5700HP-PC-4.5		4.5	20'-35'	4.2	50	'K'
	TORO 570C-4P-CV-10-QLA-PC	SMALL TURF AREA SPRAY HEAD	10-QLA-PC	10'	0.5	30	'J'
	TORO 570C-4P-CV-10-HLA-PC		10-HLA-PC	10'	0.9	30	'J'
	TORO 570C-4P-CV-10-FLA-PC		10-FLA-PC	10'	1.8	30	'J'
	TORO 570C-4P-CV-15-120-PCD1.0		15-120-PCD1.0	112'	1.0	30	'J'
	TORO 570C-4P-CV-15-H-PCD1.4		15-H-PCD1.4	12'	1.4	30	'J'
	TORO 570C-4P-CV-15-F-PCD3.0		15-F-PCD3.0	12'	3.0	30	'J'
	TORO 570C-4P-CV-15-H-PC		15-H-PC	15'	1.9	30	'J'
	TORO 570C-4P-CV-15-F-PC		15-F-PC	15'	3.9	30	'J'
	TORO 570C-4P-CV-ADJ-PC		ADJ-PC	VAR.	VAR.	30	'J'
	TORO 570C-12P-CV-10-QLA-PC	SHRUB HI-POP SPRAY HEAD	10-QLA-PC	10'	0.5	30	'K'
	TORO 570C-12P-CV-10-HLA-PC		10-HLA-PC	10'	0.9	30	'K'
	TORO 570C-12P-CV-10-F-PC		10-FLA-PC	10'	1.8	30	'K'
	TORO 570C-12P-CV-15-H-PCD1.4		15-H-PCD1.4	12'	1.4	30	'K'
	TORO 570C-12P-CV-15-F-PCD3.0		15-F-PCD3.0	12'	3.0	30	'K'
	TORO 570C-12P-CV-15-Q-PC		15-Q-PC	15'	1.0	30	'K'
	TORO 570C-12P-CV-15-H-PC		15-H-PC	15'	1.9	30	'K'
	TORO 570C-12P-CV-15-F-PC		15-F-PC	15'	3.9	30	'K'
	TORO 570C-12P-CV-ADJ-PC		ADJ-PC	VAR.	VAR.	30	'K'
●	TORO 514-20 ADJUSTABLE BUBBLER	BUBBLER FOR TREE WELLS	N/A	N/A	0.5	30	'N'

* NOZZLE NUMBER FOR ALL ROTOR HEADS IS SHOWN IN SYMBOL ON DRAWINGS.

ADJUST TO ±0.5 GPM

PIPE SIZING CHART

	3/4"
	1"
	1 1/4"
	1 1/2"
	2"
	2 1/2"
	3"
	4"

SLEEVING CHART

# WIRES	PIPE SIZE	SLEEVE SIZE
1-8	3/4"	1 1/2" SCH 40
9-15	1"	2" SCH 40
16-25	1 1/4"	2 1/2" SCH 40
26-35	1 1/2"	3" SCH 40
36-50	2"-2 1/2"	4" SCH 40
51-80	3"-4"	6" SCH 40
81-110	6"-8"	10" SCH 40

Underground Service Alert
Call: TOLL FREE
1-800 422-4133
TWO WORKING DAYS BEFORE YOU DIG

t. i. maloney, inc.
landscape architecture • planning
6180 Brockton Avenue, Suite 201 • Riverside, CA 92506
(714) 369-0700 fax (714) 369-4039

TAFT PARK
CITY OF RIVERSIDE
DEPARTMENT OF PARK AND RECREATION

SHEET DESCRIPTION: IRRIGATION PLAN

REGISTERED LANDSCAPE ARCHITECT
TIMOTHY J. MALONEY No. 2179
Signature
Date
STATE OF CALIFORNIA

DATE:	2/21/92
JOB NO.:	910308
DRAWN:	RD
CHECKED:	DG
REVISIONS:	

SCALE: 1" = 30' - 0"

I-1

8 OF 13

PLAN NO. P-0928

DRAWING NUMBER

TA - 10

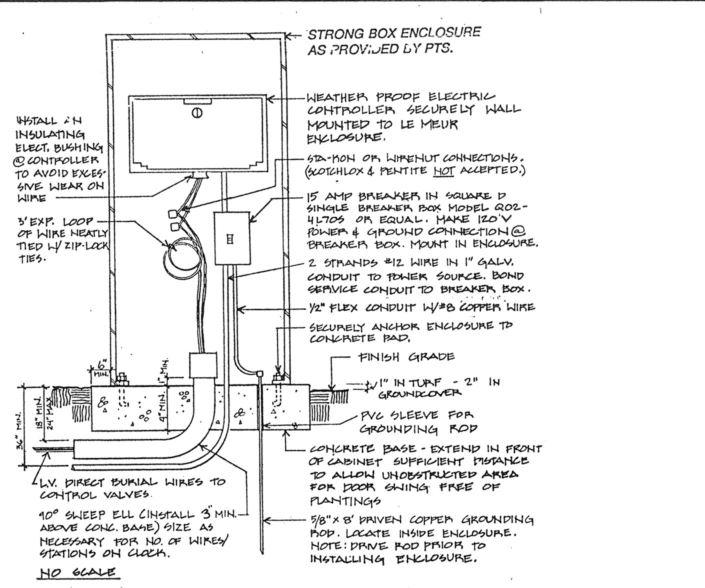

'A' AND 'B' CONTROLLERS IN ONE DOUBLE ENCLOSURE TO HAVE THE FOLLOWING SWEEP ELLS INTO BASE OF CONTROLLER:
1) 3" SWEEP FOR 'A' CONTROL WIRES
2) 3" SWEEP FOR 'B' CONTROL WIRES
3) 1" SWEEP FOR 120V POWER - 36"
4) 1 1/2" SWEEP FOR COMMUNICATION CABLE FROM PHONE LINK CONCENTRATOR

PHONE LINK CONCENTRATOR ENCLOSURE TO HAVE TO FOLLOWING SWEEP ELLS INTO THE BASE OF ITS ENCLOSURE:
1) 2" SWEEP FOR TELEPHONE SERVICE - 36"
2) 1" SWEEP FOR 120V POWER - 36"
3) 1 1/2" SWEEP FOR COMMUNICATION CABLE TO 'A' AND 'B' CONTROLLERS

A CONTROLLER

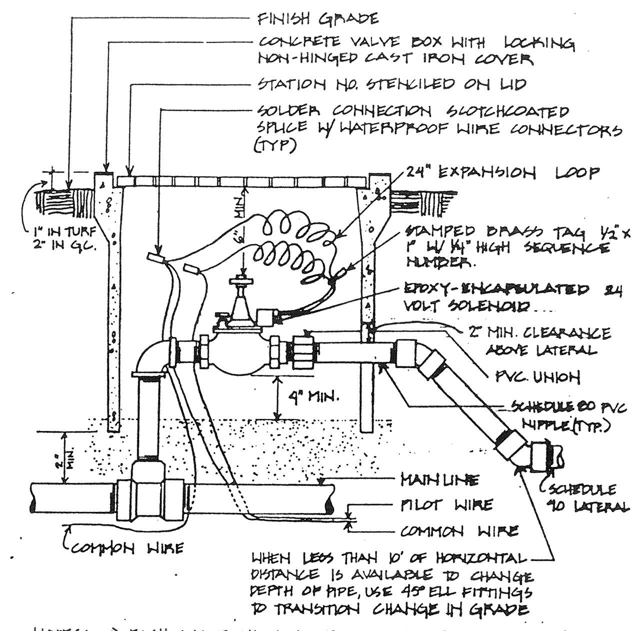

NOTES:
1) EACH VALVE SHALL HAVE ITS OWN TEE OR ELL CONNECTION TO THE MAINLINE. NO MANIFOLD CONNECTIONS
2) PROVIDE MINIMUM 3' CLEAR DISTANCE BETWEEN VALVES.
3) INSTALL VALVE BOX IN A MANNER THAT BOX DOES NOT REST ON ANY IRRIGATION LINE.

B ELECTRIC CONTROL VALVE

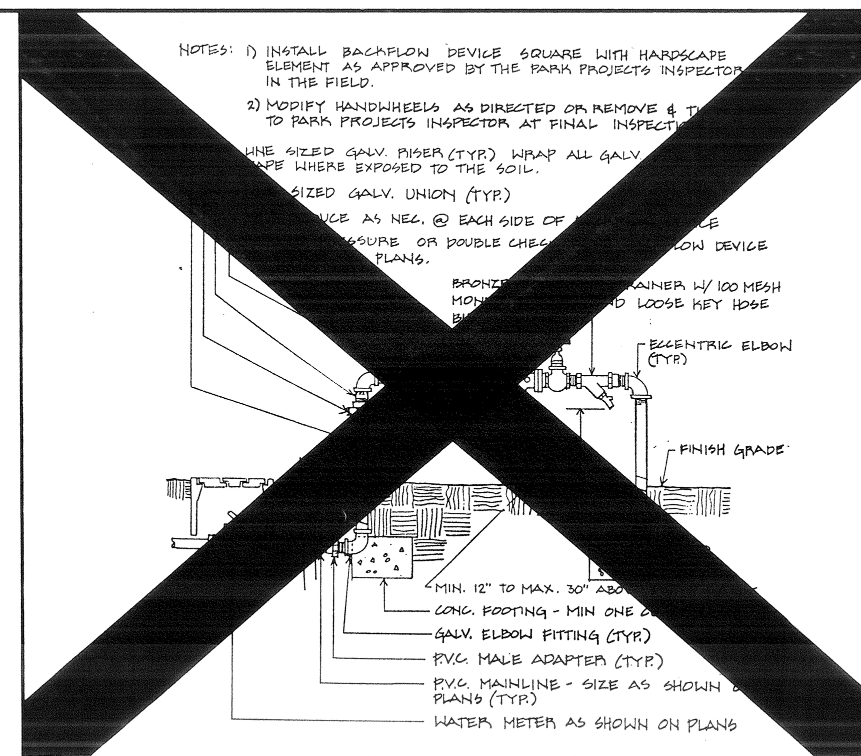

C BACKFLOW PREVENTER

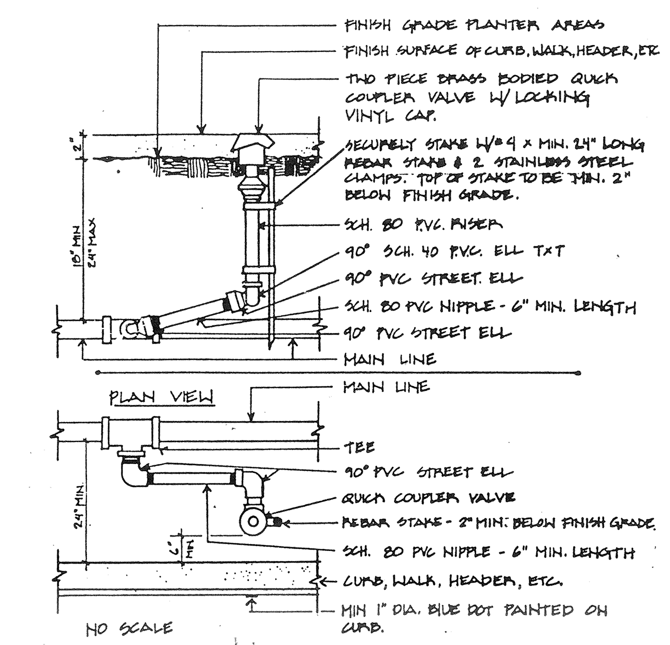

D QUICK COUPLER

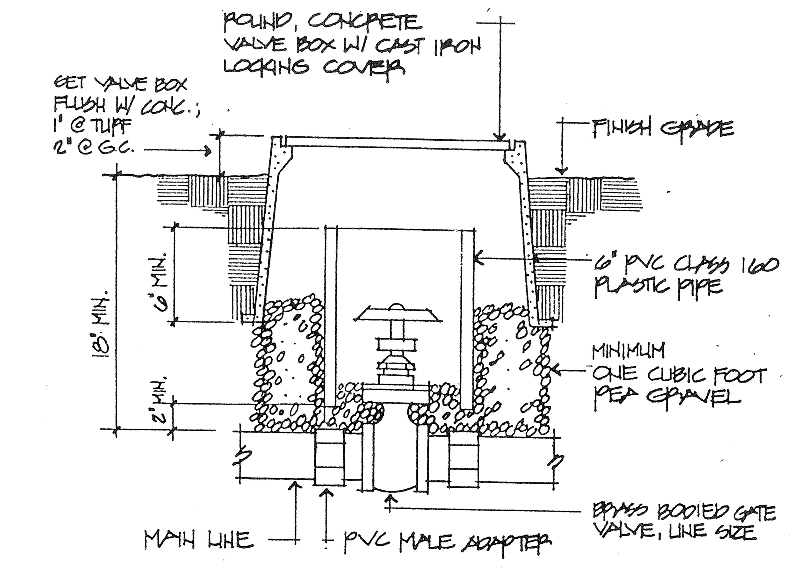

E GATE VALVE

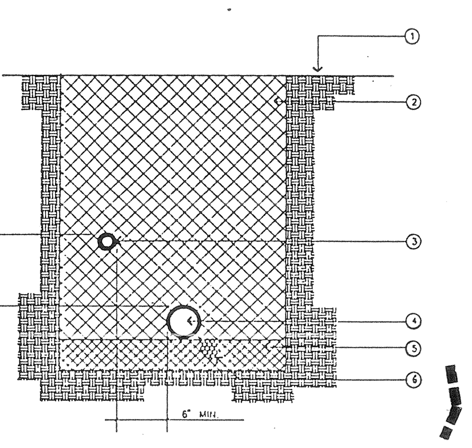

LEGEND
1 FINISH GRADE
2 CLEAN BACKFILL - SEE SPECS. FOR MATERIAL, 90% COMPACTION REQUIRED
3 NON-PRESSURE LATERAL LINE
4 PRESSURE SUPPLY LINE
5 PROVIDE 2" OF CLEAN BACKFILL
6 CONTROL WIRES - BUNDLE AND TAPE AT 15' O.C. AND INSTALL BELOW PRESSURE SUPPLY LINE

NOTES:
— PIGTAIL AND LOOP CONTROL WIRE AT ALL 90 DEGREE CHANGES IN DIRECTION

F TRENCHING

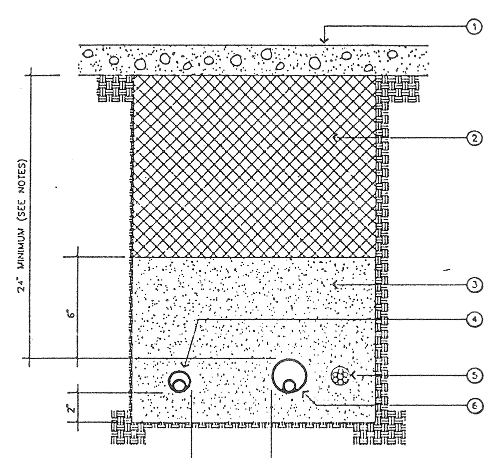

LEGEND
1 HARDSCAPING
2 CLEAN BACKFILL - SEE SPECS. FOR MATERIAL, 90% COMPACTION REQUIRED
3 SAND
4 NON-PRESSURE LATERAL LINE SLEEVE SIZE TWICE DIAMETER OF NON-PRESSURE LATERAL LINE
5 CONTROL WIRE SLEEVE - SIZE PER PLAN. INSTALL ADJACENT TO PRESSURE SUPPLY LINE
6 PRESSURE SUPPLY LINE SLEEVE - SIZE TWICE DIAMETER OF PRESSURE SUPPLY LINE

NOTES:
— ALL SLEEVES TO BE SCH. 40 PVC.
— EXTEND ALL SLEEVES 12" BEYOND EDGE OF HARDSCAPE AT BOTH ENDS

G SLEEVING

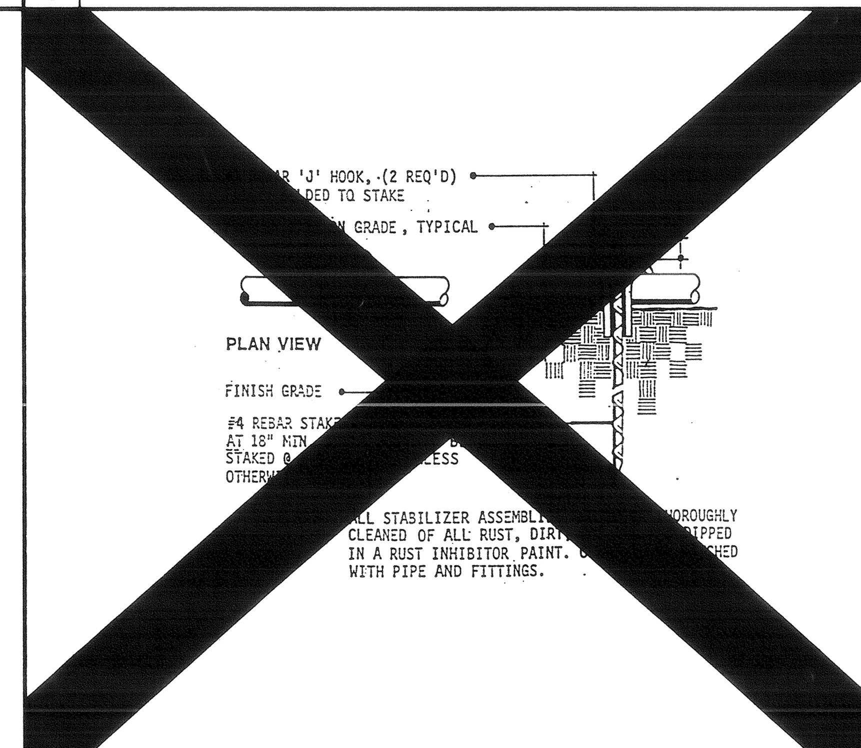

H PIPE ON GRADE

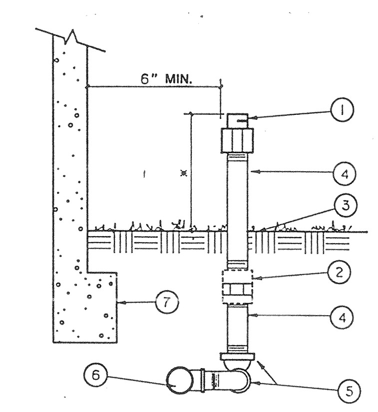

LEGEND
1. SHRUB SPRAY/BUBBLER HEAD
2. ANTI-DRAIN VALVE *
3. FINISH GRADE
4. PVC SCHEDULE 80 NIPPLE
5. PVC TxT 90 DEGREE ELL (2 REQUIRED)
6. LATERAL LINE FITTING
7. WALL, FENCE, CURB OR WALK WHERE OCCURS
* 12" ABOVE F.G. FOR SHRUB SPRAY HEADS AND 3" ABOVE F.G. FOR BUBBLER HEADS

NOTE: DRAINAGE OF IRRIGATION WATER THROUGH SPRINKLER HEAD WILL NOT BE ALLOWED. SOME SPRINKLER HEADS WILL REQUIRE THE INSTALLATION OF AN ANTI-DRAIN VALVE IN THE RISER NIPPLE TO PREVENT DRAINAGE. DURING THE COURSE OF CONSTRUCTION THE CONTRACTOR SHALL INSTALL AN ANTI-DRAIN AS REQUIRED AT ANY SPRINKLER HEAD SHOWING SIGNS OF DRAINING AFTER THE IRRIGATION SYSTEM HAS OPERATED FROM AN ON TO OFF POSITION. INSTALLATION OF ANTI-DRAIN VALVES SHALL BE INCLUDED IN THE BID PRICE WITHOUT ADDITIONAL COST TO THE OWNER.

I QUADRA BUBBLER

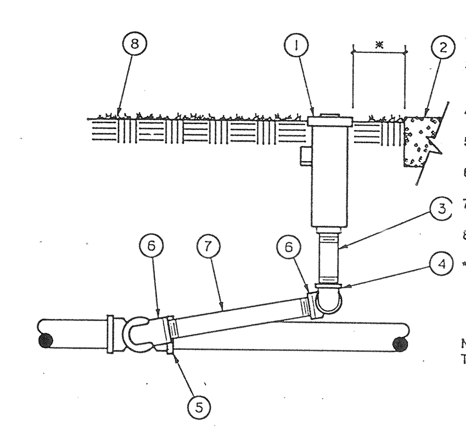

LEGEND
1. POP-UP SPRAY HEAD
2. WALK OR CURB
3. PVC SCHEDULE 80 NIPPLE - 4" MIN. LENGTH
4. PVC TxT 90 DEGREE ELL
5. LATERAL LINE PIPE AND FITTING
6. MARLEX 90 DEGREE STREET ELL
7. PVC SCHEDULE 80 NIPPLE - 6" LONG
8. FINISH GRADE
* 1" IN TURF AREAS 2" IN SHRUB AREAS

NOTE: USE TEFLON TAPE ON MALE PIPE THREADS FOR PVC TO PVC CONNECTIONS

J TURF POP-UP HEAD

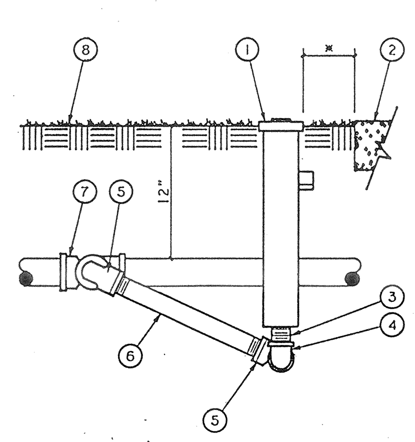

LEGEND
1. 12" POP-UP SPRINKLER
2. WALK OR CURB
3. PVC SCHEDULE 80 NIPPLE
4. PVC TxT 90 DEGREE ELL
5. MARLEX 90 DEGREE STREET ELL
6. PVC SCHEDULE 80 NIPPLE - 12" LONG
7. LATERAL LINE PIPE AND FITTING
8. FINISH GRADE
* 2" IN LAWN AREAS 6" IN GROUNDCOVER AREAS

NOTE: USE TEFLON TAPE ON ALL MALE PIPE THREADS FOR PVC TO PVC CONNECTIONS

K SHRUB HI-POP HEAD

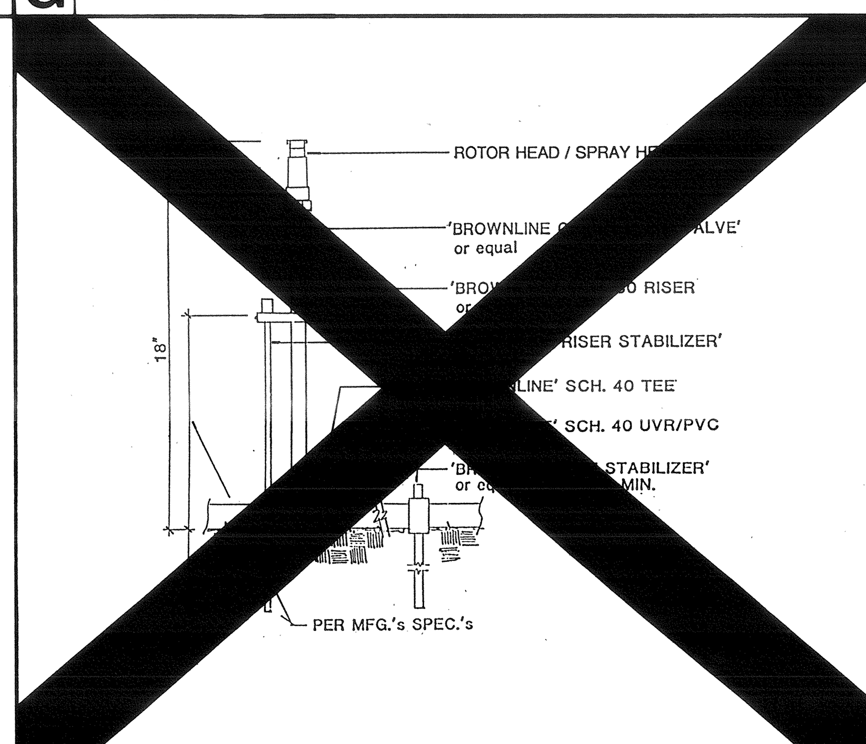

L SHRUB ROTOR ON GRADE

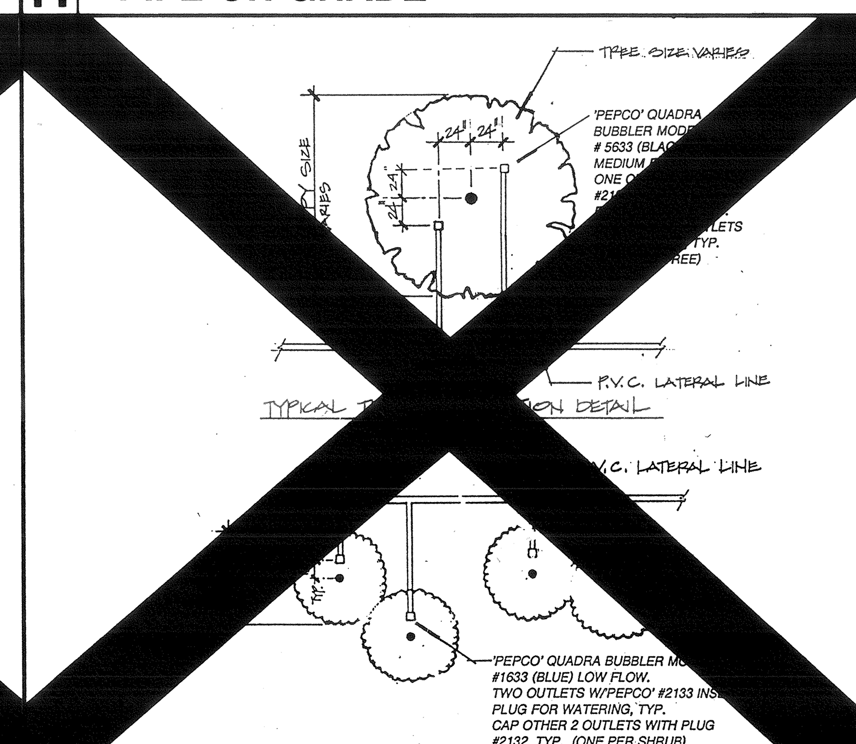

M QUADRA BUBBLER

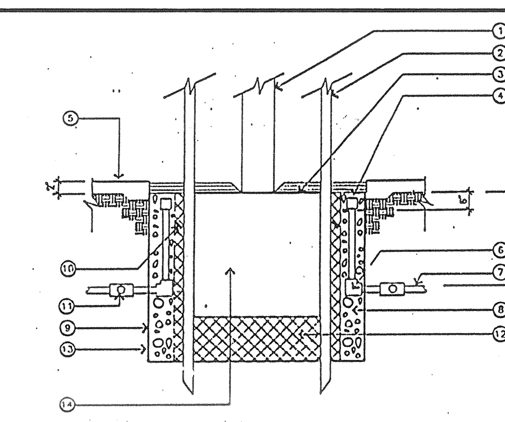

LEGEND
1. TREE TRUNK
2. 2" LODGE POLE PINE STAKES
3. FINISH GRADE: 2" BELOW TOP OF WALK OR TREE GRATE AS PER PLAN
4. PRESSURE COMPENSATING BUBBLERS ON 1/2" DIA. SCH. 80 NIPPLES. LEAVE A 6" SPACE BELOW HEAD FOR MAINTENANCE
5. EXISTING HARDSCAPE EDGE
6. S x T ELL
7. CL. 200 PVC LATERAL IRRIGATION LINE-THRU ROOT BARRIER - BOTH SIDES
8. 4" DIAMETER X 36" LONG PERFORATED PVC DRAIN PIPE WITH 5/8" AGGREGATE, TOP WITH 4" DIAMETER PVC CAP - SCREW SIDES OF CAP TO PIPE IN 2 PLACES
9. TREE PLANTING PIT
10. PLANT TABLETS
11. TEE AROUND PERIMETER OF TREE WELL
12. NATIVE BACKFILL
13. INSTALL ROOT BARRIER PER MFG. INSTRUCTIONS WHERE TREE IS LESS THAN 5' FROM HARDSCAPE OR CURBING
14. ROOTBALL

NOTE: USE TEFLON TAPE ON ALL THREADED FITTINGS

N TREE WELL BUBBLER

O

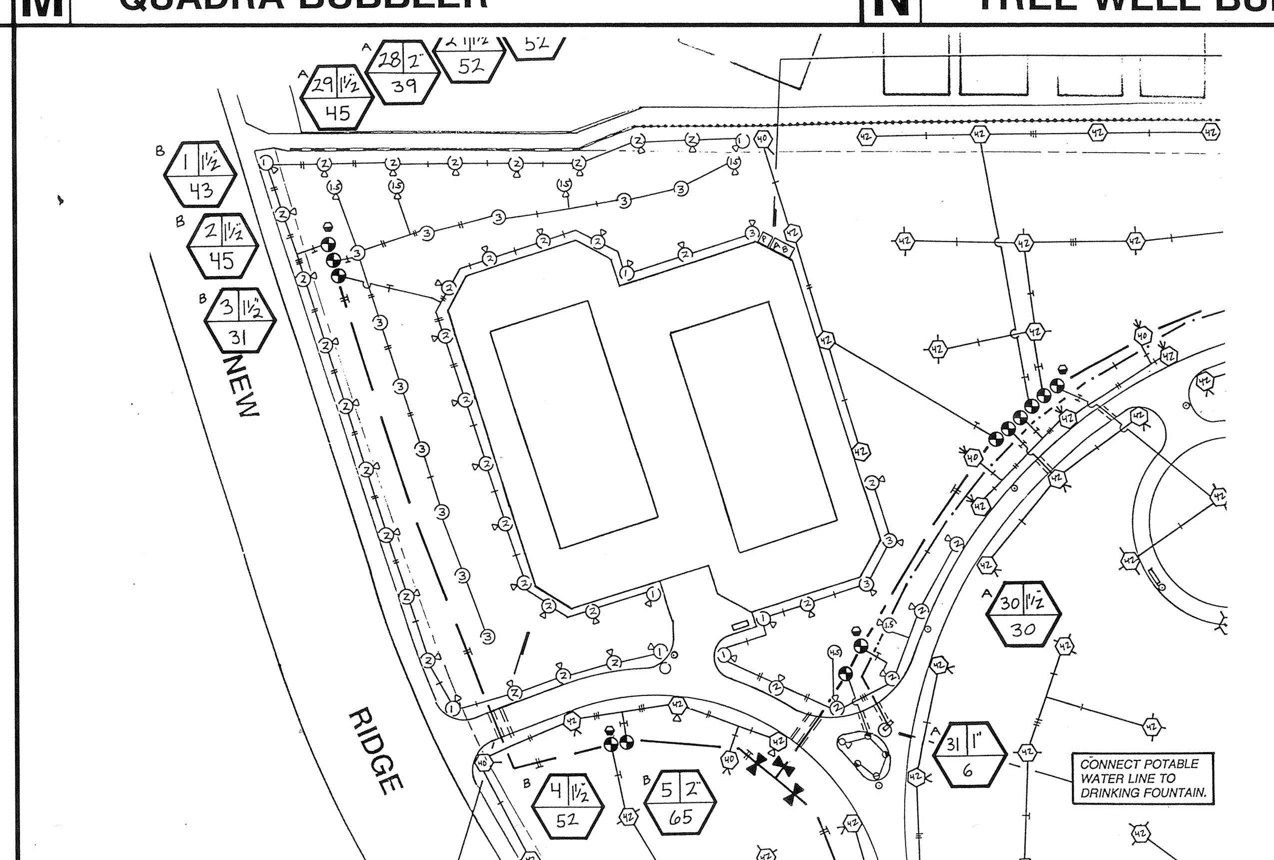

P TENNIS COURT AREA IRRIGATION

ADDITIVE ALTERNATE #3A

SCALE: 1" = 40'-0"

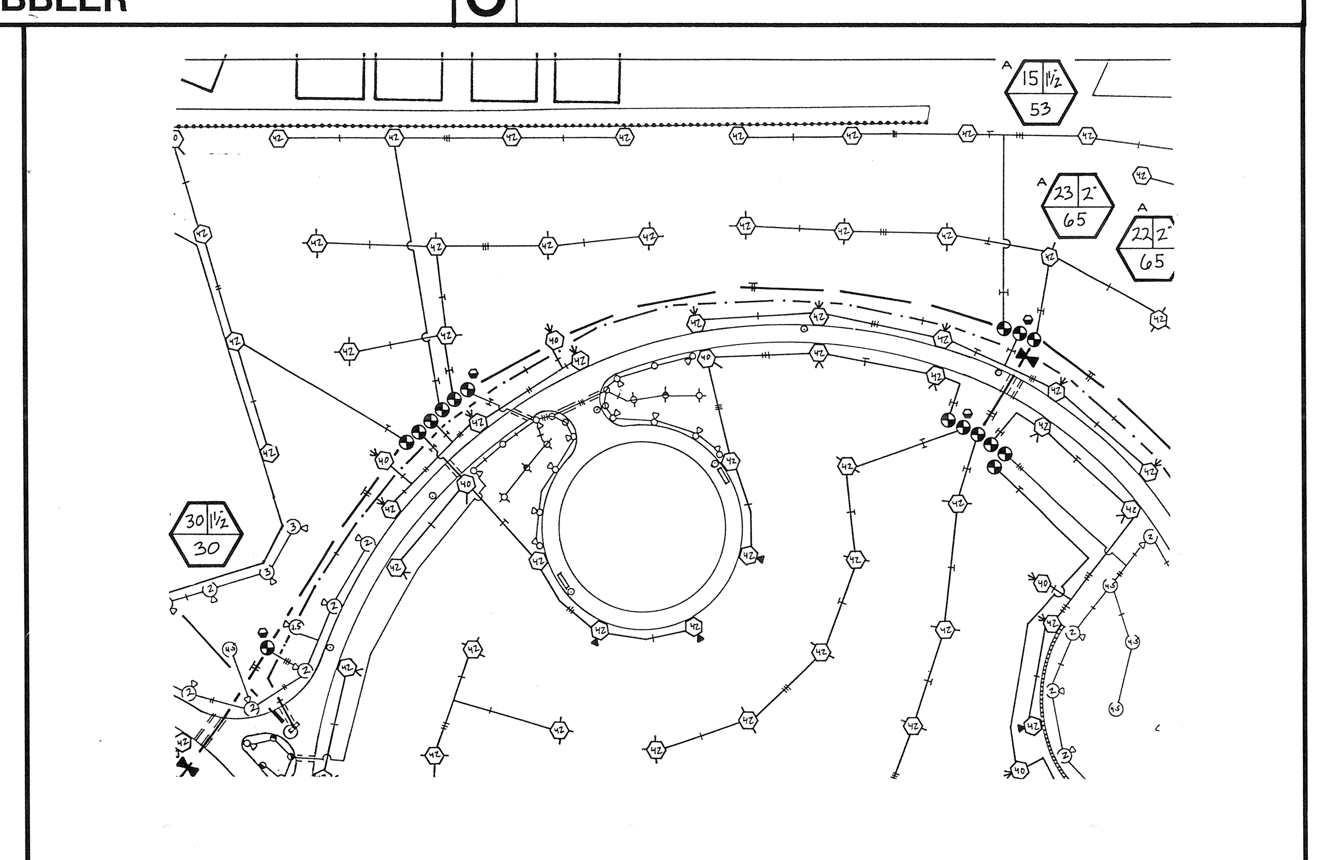

Q BASKETBALL COURT AREA IRRIGATION

ADDITIVE ALTERNATE #3C

SCALE: 1" = 40'-0"

t. i. maloney, inc.
landscape architecture • planning
6180 Brockton Avenue, Suite 201 • Riverside, CA 92506
(714) 369-0700 fax (714) 369-4039

TAFT PARK
CITY OF RIVERSIDE
DEPARTMENT OF PARK AND RECREATION

SHEET DESCRIPTION:
IRRIGATION DETAILS

DATE:	2/21/92
JOB NO.:	910308
DRAWN:	RD
CHECKED:	DG
REVISIONS:	

N/A

SCALE: N.T.S.

I-2

9 OF 13

PLAN NO. P-0928

DRAWING NUMBER

DRAWING NUMBER TA-09

TAFT ELEMENTARY SCHOOL

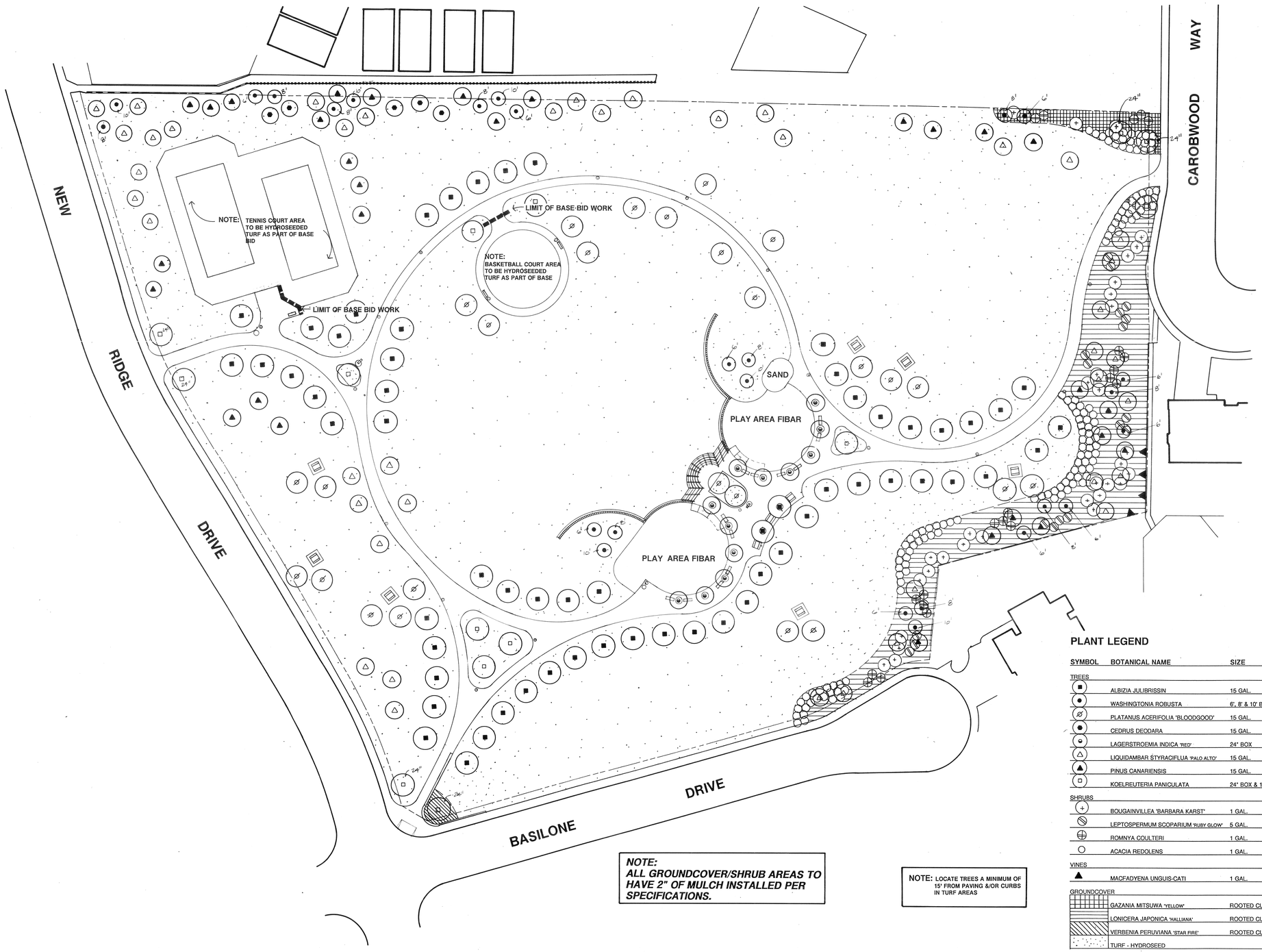

NOTE:
ALL GROUNDCOVER/SHRUB AREAS TO HAVE 2" OF MULCH INSTALLED PER SPECIFICATIONS.

NOTE: LOCATE TREES A MINIMUM OF 15' FROM PAVING &/OR CURBS IN TURF AREAS

PLANT LEGEND

SYMBOL	BOTANICAL NAME	SIZE	DETAIL	COMMON NAME
TREES				
	ALBIZIA JULIBRISSIN	15 GAL.	A	SILK TREE
	WASHINGTONIA ROBUSTA	6', 8' & 10' BT	G	MEXICAN FAN PALM
	PLATANUS ACERIFOLIA 'BLOODGOOD'	15 GAL.	A	LONDON PLANE TREE
	CEDRUS DEODARA	15 GAL.	A,E	DEODAR CEDAR
	LAGERSTROEMIA INDICA 'RED'	24" BOX	A,E	CRAPE MYRTLE
	LIQUIDAMBAR STYRACIFLUA 'PALO ALTO'	15 GAL.	A,E	SWEET GUM
	PINUS CANARIENSIS	15 GAL.	A,E	CANARY ISLAND PINE
	KOELREUTERIA PANICULATA	24" BOX & 15 GAL.	A,E	GOLDENRAIN TREE
SHRUBS				
	BOUGAINVILLEA 'BARBARA KARST'	1 GAL.	C,F	BOUGAINVILLEA
	LEPTOSPERMUM SCOPARIUM 'RUBY GLOW'	5 GAL.	C,F	RUBY GLOW TEE TREE
	ROMNYA COULTERI	1 GAL.	C,F	MATILIJA POPPY
	ACACIA REDOLENS	1 GAL.	C,F	NCN
VINES				
	MACFADYENA UNGUIS-CATI	1 GAL.	C	CATS CLAW
GROUNDCOVER				
	GAZANIA MITSUWA 'YELLOW'	ROOTED CUTTINGS	12"O.C.	GAZANIA
	LONICERA JAPONICA 'HALLIANA'	ROOTED CUTTINGS	18"O.C	HALL'S HONEYSUCKLE
	VERBENIA PERUVIANA 'STAR FIRE'	ROOTED CUTTINGS	12"O.C.	VERBENIA
	TURF - HYDROSEED		PER SPECS	

t. i. maloney, inc.
landscape architecture • planning
6180 Brockton Avenue, Suite 201 • Riverside, CA 92506
(714) 369-0700 fax (714) 369-4039

TAFT PARK
CITY OF RIVERSIDE
DEPARTMENT OF PARK AND RECREATION

SHEET DESCRIPTION:
PLANTING PLAN

REGISTERED LANDSCAPE ARCHITECT
TIMOTHY I. MALONEY No. 2510
Signature
Date
STATE OF CALIFORNIA

DATE:	2/21/92
JOB NO.:	910308
DRAWN:	KB
CHECKED:	DG
REVISIONS:	

SCALE: 1" = 30' - 0"

P-1

10 OF 13

PLAN NO. P-0928

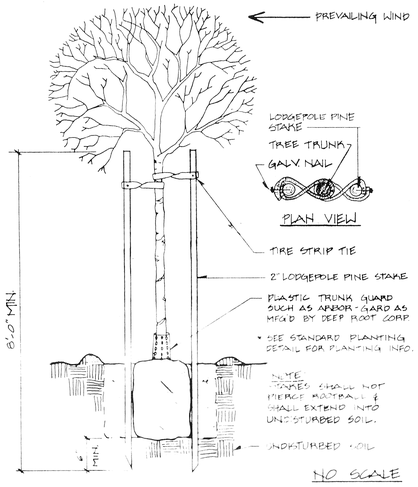

A DOUBLE STAKING

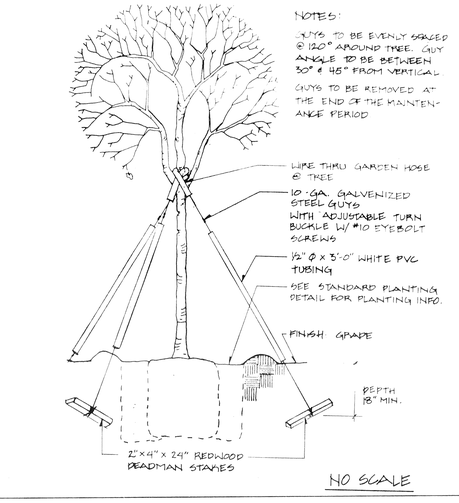

B TREE GUYING

GENERAL PLANTING NOTES

1) Install 3" deep trench (see detail) at 3'0"x12" 48 hours prior to installing any plant material.

2) Trees planted in turf areas shall be maintained with a minimum 12" radius mulched tree ring free of turf throughout the maintenance period.

3) Watering basins may be removed after the maintenance period.

4) For staking information as applicable, refer to standard staking detail.

5) For guying information as applicable, refer to standard guying detail.

6) For specification information, refer to City of Riverside Park and Recreation Department Standard Specifications sections 02480/02401.

7) Provide Fertilizer Tablets as follows:

1 gallon plant	2 tablets
5 gallon plant	3 tablets
15 gallon plant	5 tablets
24" box plant	8 tablets

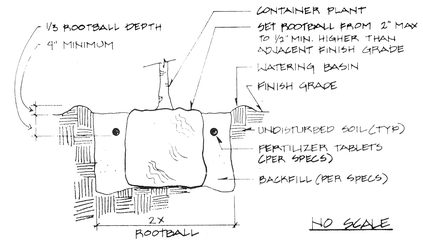

C PLANTING

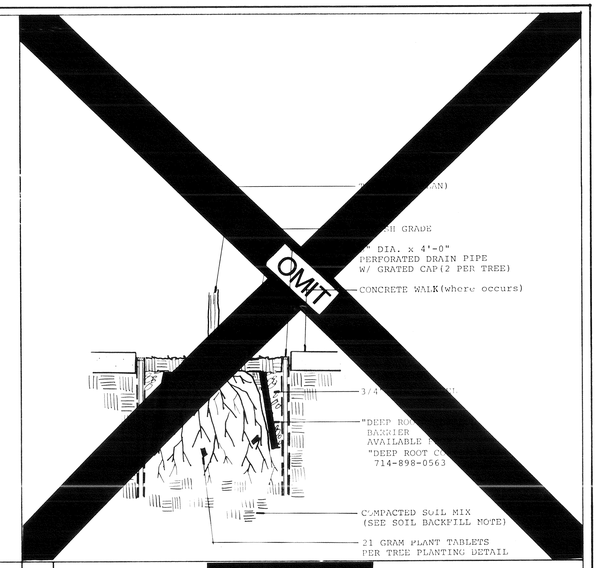

D [redacted]

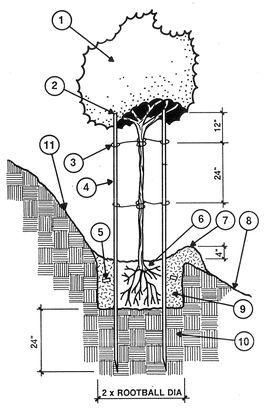

LEGEND

1. TREE PER PLAN
2. TRIM TOP OF STAKES BELOW LOWEST BRANCHES TO PREVENT DAMAGE
3. CROSS TIE BETWEEN STAKE AND TREE PER PLANTING SPECS/NOTES
4. 2" DIA. X 10' LONG LODGE POLE STAKES (INSTALL WIDER THAN ROOTBALL)
5. 21 GRAM PLANT TABLETS 5 GAL = 3, 15 GAL = 5, 24" BOX = 8
6. ROOTBALL (SET CROWN +/- 3" ABOVE FINISH GRADE)
7. EARTH WATERING BASIN (RAKE SMOOTH PRIOR TO SEEDING IN HYDROSEED AREAS; AT END OF PLANT ESTABLISHMENT PERIOD FOR ALL REMAINING BASINS)
8. FINISH GRADE
9. COMPACTED BACKFILL MIX (PER PLANTING SPECS/NOTES)
10. UNDISTURBED NATIVE SOIL
11. CUT INTO SLOPE TO CREATE A LEVEL BASIN

c:irplt17.det

E TREE PLANTING - SLOPE

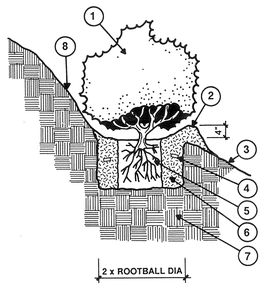

LEGEND

1. SHRUB PER PLAN
2. EARTH WATERING BASIN (RAKE SMOOTH PRIOR TO SEEDING IN HYDROSEED AREAS; AT END OF PLANT ESTABLISHMENT PERIOD FOR ALL REMAINING BASINS)
3. FINISH GRADE
4. 7 GRAM PLANT TABLETS 1 GAL. = 3, 5 GAL. = 6 15 GAL. = 9, 24" BOX = 12
5. ROOTBALL (SET CROWN +/- 3" ABOVE FINISH GRADE)
6. COMPACTED BACKFILL MIX (PER PLANTING SPECS/NOTES)
7. UNDISTURBED NATIVE SOIL
8. CUT INTO SLOPE TO CREATE LEVEL BASIN

c:irplt16.det

F SHRUB PLANTING - SLOPE

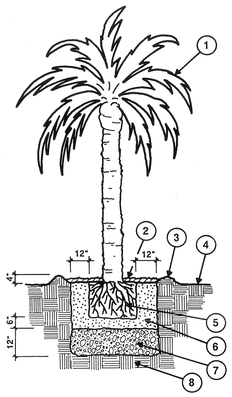

LEGEND

1. PALM TREE PER PLAN
2. 2" LAYER OF WOOD CHIP MULCH
3. EARTH WATERING BASIN (RAKE SMOOTH PRIOR TO SEEDING IN HYDROSEED AREAS; AT END OF PLANT ESTABLISHMENT PERIOD FOR ALL REMAINING BASINS)
4. FINISH GRADE
5. ROOTBALL (SET TOP OF ROOTBALL 3"-6" BELOW FINISH GRADE OR PER LANDSCAPE ARCHITECT IN FIELD)
6. 100% WASHED PLASTER SAND BACKFILL
7. 3/4" GRAVEL BACKFILL
8. UNDISTURBED NATIVE SOIL

NOTE:

- ALL BACKFILL TO BE WATER JETTED DURING PLANTING FOR MAXIMUM STABILITY
- ALL FRONDS TO BE TIED TOGETHER WITH ORGANIC TWINE PRIOR TO PLANTING

c:irplt18.det

G PALM TREE PLANTING

H

t.i. maloney, inc.
landscape architecture • planning
6180 Brockton Avenue, Suite 201 • Riverside, CA 92506
(714) 369-0700 fax (714) 369-4039

TAFT PARK
CITY OF RIVERSIDE
DEPARTMENT OF PARK AND RECREATION

SHEET DESCRIPTION
PLANTING DETAILS

REGISTERED LANDSCAPE ARCHITECT
MOTTI J. MALONEY NO. 2210
Signature
Date
STATE OF CALIFORNIA

DATE 2/21/92
JOB NO 910308
DRAWN RW
CHECKED DG
REVISIONS

N/A

SCALE N/A

P-2

PLAN NO. P-0928

BASE BID:
CONTRACTOR TO PULL CONDUIT TO TENNIS COURT - TERMINATE IN PULL BOX. ADD ALTERNATE ITEM NO. 3A TO PROVIDE LIGHTS AND FOOTINGS

TAFT ELEMENTARY SCHOOL

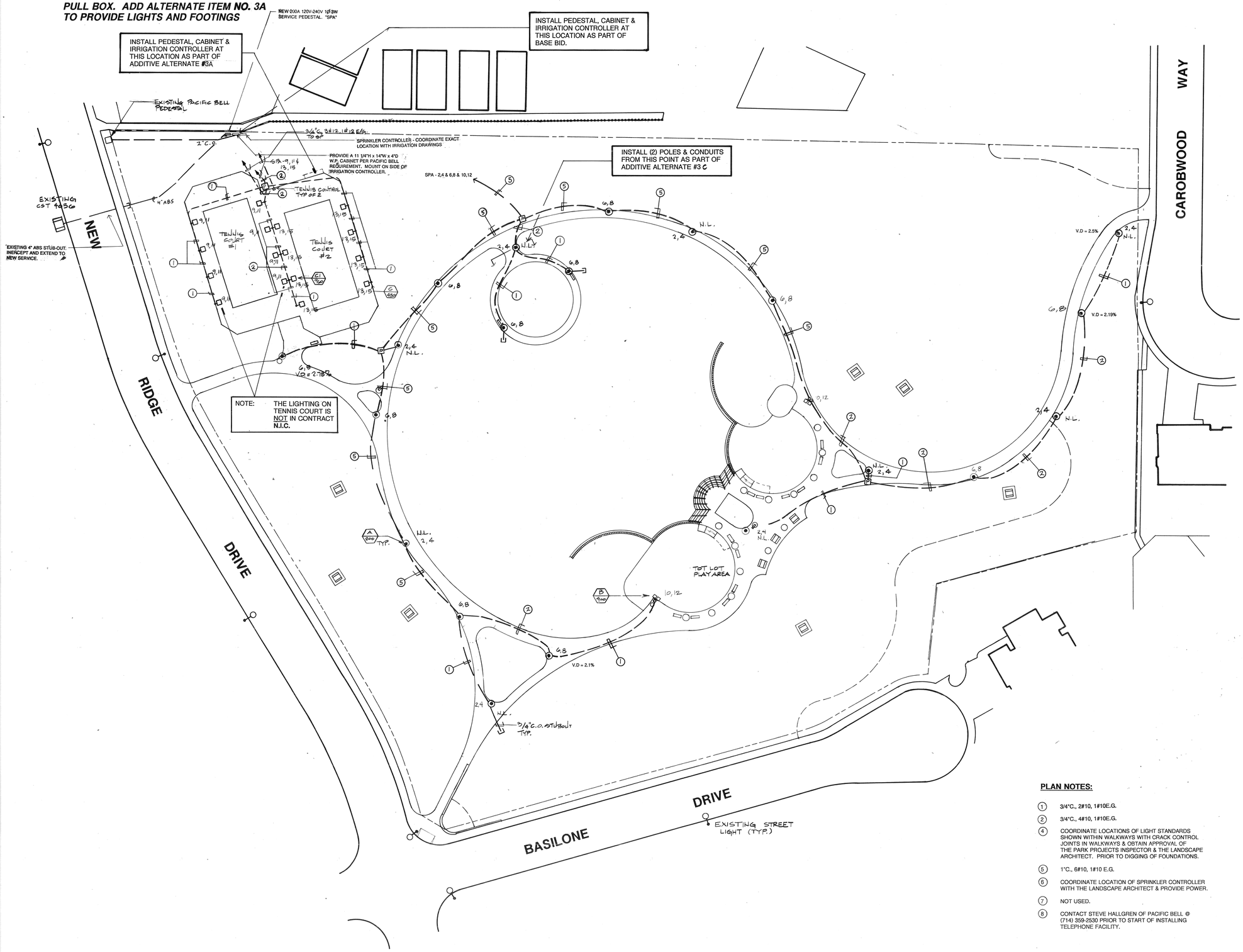

PLAN NOTES:

1. 3/4"C., 2#10, 1#10E.G.
2. 3/4"C., 4#10, 1#10E.G.
4. COORDINATE LOCATIONS OF LIGHT STANDARDS SHOWN WITHIN WALKWAYS WITH CRACK CONTROL JOINTS IN WALKWAYS & OBTAIN APPROVAL OF THE PARK PROJECTS INSPECTOR & THE LANDSCAPE ARCHITECT. PRIOR TO DIGGING OF FOUNDATIONS.
5. 1"C., 6#10, 1#10 E.G.
6. COORDINATE LOCATION OF SPRINKLER CONTROLLER WITH THE LANDSCAPE ARCHITECT & PROVIDE POWER.
7. NOT USED.
8. CONTACT STEVE HALLGREN OF PACIFIC BELL @ (714) 359-2530 PRIOR TO START OF INSTALLING TELEPHONE FACILITY.

t. i. maloney, inc.
landscape architecture • planning
6180 Brockton Avenue, Suite 201 • Riverside, CA 92506
(714) 369-0700 fax (714) 369-4039

TAFT PARK
CITY OF RIVERSIDE
DEPARTMENT OF PARK AND RECREATION

SHEET DESCRIPTION: **ELECTRICAL SITE PLAN**

REGISTERED LANDSCAPE ARCHITECT
TIMOTHY J. MALONEY NO. 2110
Signature
Date
STATE OF CALIFORNIA

DATE:	2/21/92
JOB NO.:	910308
DRAWN:	C.M.C.
CHECKED:	DG J.P.A. SR.
REVISIONS:	

9-30-94

PACIFIC BELL
STEVE HALLGREN
(714) 359-2530

RIVERSIDE UTILITY
CHAS BLUEMELL
(714) 782-5281

21 - 561

RWR PASCOE
ELECTRICAL ENGINEERS • LIGHTING CONSULTANTS
One Venture, Suite 220 • Irvine, CA 92718 • (714) 753-1737 • FAX (714) 753-1588
3150 Fourth Street • Riverside, CA 92501 • (714) 787-1880 • FAX (714) 787-1887

SCALE: 1" = 30' - 0"

E-1

12 OF 13

PLAN NO. P-0928

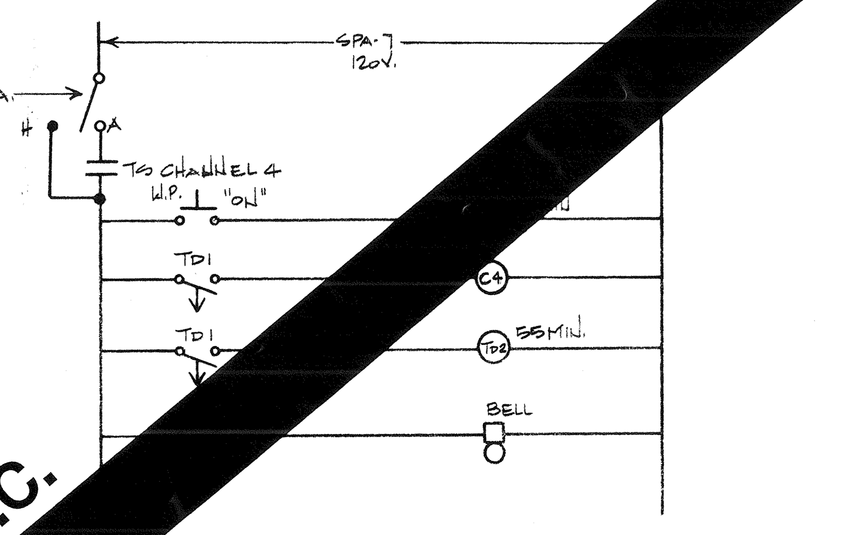

[redacted]-1 = TIME DELAY RELAY - AGASTAT: 7022 AI
C4 = 30A - 2P LTG CONTACTOR 120V COIL (MTD. IN SERV. PEDESTAL)
TD-2 = TIME DELAY RELAY - AGASTAT 7021 AI
BELL = LOW D.B. BELL. MOUNT AT +7'-0"
OPERATION: 1. TIME SWITCH TO ENERGIZE CONTROL CKT
2. PUSH "ON" BUTTON TO ENERGIZE TD-1 (60MIN) & TD-1 ENERGIZES TD-2 (55 MIN)
3. AFTER 55 MIN. TD-2 CLOSES TO ENERGIZES BELL TO SIGNIFY 5 MINUTES LEFT.
4. PUSHING "ON" BUTTON WILL RESET TIMER.
TD1 & TD2 CAN BE ADJUSTED FOR LESS TIME AND SHALL BE ADJUSTED WITH A 5 MIN DIFFERENTIAL
INSTALL COMPONENTS IN A HEAVY DUTY CAST WEATHERPROOF ENCLOSURE (2 REQUIRED) AND MOUNT NEAR TENNIS COURT ENTRY POST
"ON" = BUTTON EXPOSED TO EXTERIOR WITH PROTECTIVE SHROUD.

TENNIS COURT CONTROL DIAGRAM

SCALE: 1/8"=1'-0" (8)

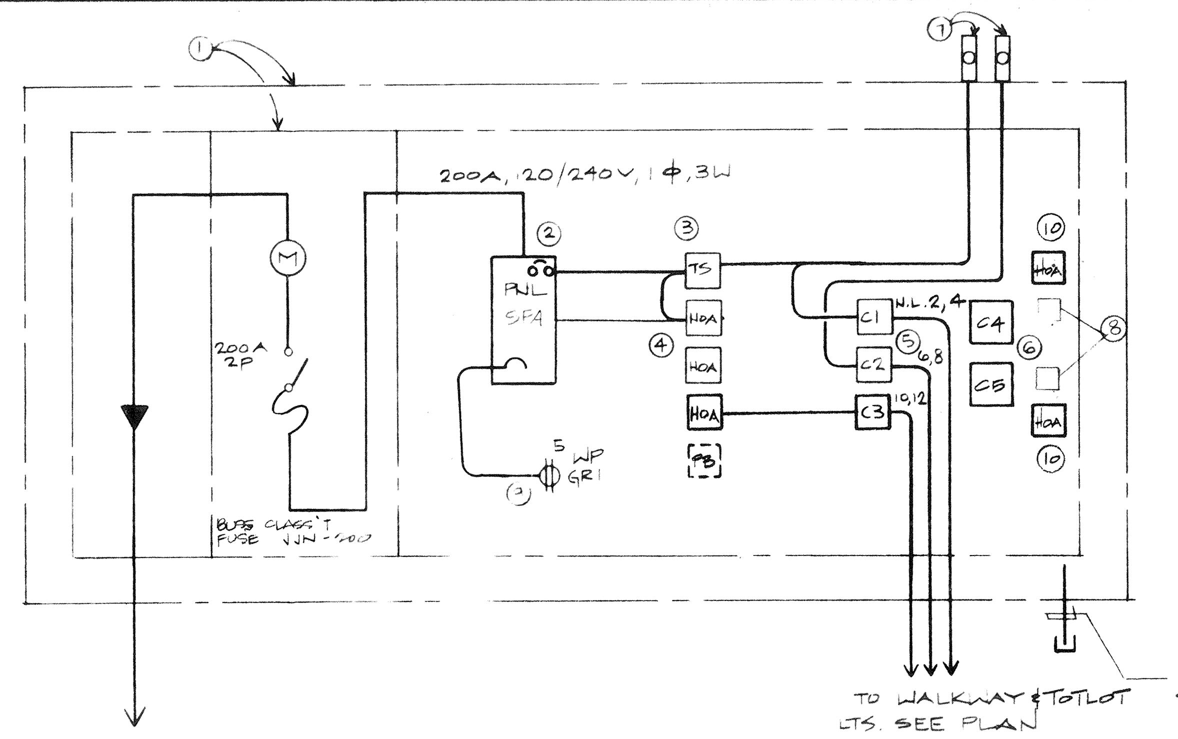

SINGLE LINE NOTES:

1. W.P. SERVICE PEDESTAL "SPA" WITH U.G.P.S., SERVICE SECTION AND CONTROL SECTION. PADLOCKABLE ENCLOSURE.
2. 24 CIRCUIT PANELBOARD WITH BOLT-ON CIRCUIT BREAKERS. SEE SCHEDULE.
3. 4-CHANNEL ELECTRONIC PROGRAMMABLE TIMER.
4. (4) HAND-OFF-AUTO SWITCH.
5. (3) 30A-4P ELECTRICALLY HELD LIGHTING CONTACTOR, 120V COIL.
6. (2) FIXTURE LIGHTING CONTACTORS (TENNIS COURTS).
7. (2) PHOTOCELL.
8. RUNNING TIME - CONNECT TO TENNIS COURT CONTROL CIRCUITS.
9. 20A-120V NEMA 5-20R GFI TYPE RECEPTACLE.
10. HOA SWITCH FOR TENNIS COURT LIGHTING, CONTACTORS C4 & C5

LOAD SUMMARY

WALKWAY LTG.	5.25 KW
TOTLOT LTG.	1.0
MISC.	.54
FUTURE TENNIS COURT LTG.*	16.5
NOTE: LTG LOADS INCLUDE L.C.L.	23.29 KW
OR	97.0A @ 120/240V., 1Φ, 3W.

SINGLE LINE DIAGRAM

SCALE N.T.S. (1)

ELECTRICAL SYMBOL LIST

(symbol)	POLE MOUNTED LIGHT FIXTURE.
(symbol)	POST MOUNTED LIGHT FIXTURE.
A / 200	"A" INDICATES ELECTRICAL FIXTURE TYPE. "200" INDICATES TOTAL FIXTURE VA.
E.G.	EQUIPMENT GROUND.
NL	NIGHT LIGHT.
G.F.I.	GROUND FAULT INTERRUPTER.
(symbol)	DUPLEX CONVENIENCE OUTLET, +12" OR AS NOTED.
(symbol)	ELECTRICAL SWITCHBOARD AND CONTROL PANEL.
(symbol)	GROUND.
(symbol)	CONDUIT RUN CONCEALED BELOW GRADE, 3/4"C. MINIMUM, NO. OF CONDUCTORS AS NOTED.
(symbol)	CONDUIT STUB-OUT, CAP AND MARK TERMINATE IN A CONCRETE PULL BOX.
MS-1,2	HOME RUN TO SWITCHBOARD "MS", NUMBERS INDICATES CIRCUITS IN SWITCHBOARD "MS".
C.O.	CONDUIT ONLY, WITH APPROVED PULL WIRE.
W.P.	WEATHERPROOF, NEMA 3R.
M.H.	MOUNTING HEIGHT TO CENTER LINE OF DEVICE.
(1)	PLAN NOTE CALL OUT.
(P)	UNDERGROUND PULL BOX WITH TAMPER RESISTANT BOLT DOWN COVER. BROOKS PRODUCT NO 5PB OR EQUAL.
(symbol)	STREET LIGHT

LIGHTING FIXTURE SCHEDULE

SYM (TYPE / WATTS)	DESCRIPTION	LAMPS NO.	LAMPS WATTS	LAMPS TYPE	VOLTS	MANUFACTURER	CATALOG NO.	MOUNTING
A / 200	ROUND ONE PIECE CAST ALUMINUM FINNED BODY WITH SPUN ALUMINUM TOP, PRISMATIC POLY-CARBONATE LENS WITH AN ANSI TYPE V DISTRIBUTION, HPF BALLAST.	1	150	HPS	240 *	DELTA	SEE SPECIFICATIONS	POLE TOP DETAIL
B / 400	RECTANGULAR TYPE CUT-OFF SITE LIGHT OF ONE PIECE CAST ALUMINUM BODY AND DOOR GASKETED AND WITH TEMPERED IMPACT RESISTANT CLEAR GLASS LENS, REMOVABLE BALLAST ASSEMBLY, HPF BALLAST, WITH MOUNTING BRACKET AND VANDAL SHIELD.	2	150	HPS	240 *	MCGRAW EDISON	SEE SPECIFICATIONS	POLE TOP
C / 480	RECTANGULAR DIE FOR MED. ALUMINUM HOUSING WITH HIGH IMPACT, HEAT RESISTANT CLEAR TEMPERED LENS, TYPE II DISTRIBUTION HPF BALLAST	1	400	SUPER M.H.	240	TRIMBLEHOUSE	XLX5001-400W - SMH-III/5 DEGREE TILT-240-BZ POLE-SSP-8430-8-BZ	POLE
C1 / 960	SAME AS TYPE "C" EXCEPT (2) FIXTURE	2	400	SUPER M.H.	240	TRIMBLEHOUSE	XLX-3002-400W-SMH-III/5 DEGREE TILT-240-BZ POLE: SAME AS TYPE C	POLE

TENNIS COURT N.I.C.

* PROVIDE LO-TEMP BALLAST.
PROVIDE 1 SPARE MULTITAP BALLAST FOR EACH TYPE OF FIXTURE.
PROVIDE (3) SPARE LAMPS OF EACH TYPE OF 150 WATT H.P.S. & 400W
SUPER METAL HALIDE

SERVICE PEDESTAL - MYERS - #MEUGD-F200C/SS/MOD

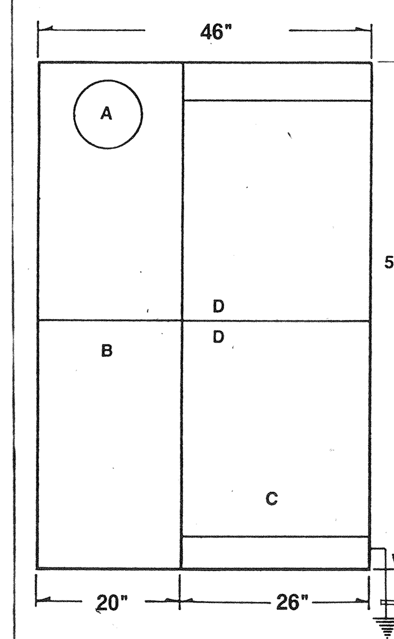

PROVIDE DRIVEN GROUND ROD PER 1990 NEC ARTICLE 250

STANDARD FEATURES

- A. Meter socket with test blocks.
- B. Service disconnect or other control area.
- C. Auxiliary control section.
- D. Hinged deadfront.
- E. Photocell socket when required.
- F. Adjustable mounting panels.

MODIFICATIONS

SEE SINGLE NOTES

SPECIFICATIONS

- 10 gauge zinc coated steel construction.
- Rainproof type 3R enclosure.
- All factory wiring is copper.
- Detachable pad mount sub-base for fast installation.
- Standard finish light green baked enamel over corrosion resistant zinc chromate primer — exceeds 250 hours salt spray ASTM B-117.
- Supplied with overcurrent devices and control equipment factory installed and wired as required by individual customer specifications.

MAIN "SPA" ELEVATION

SCALE N.T.S. (2)

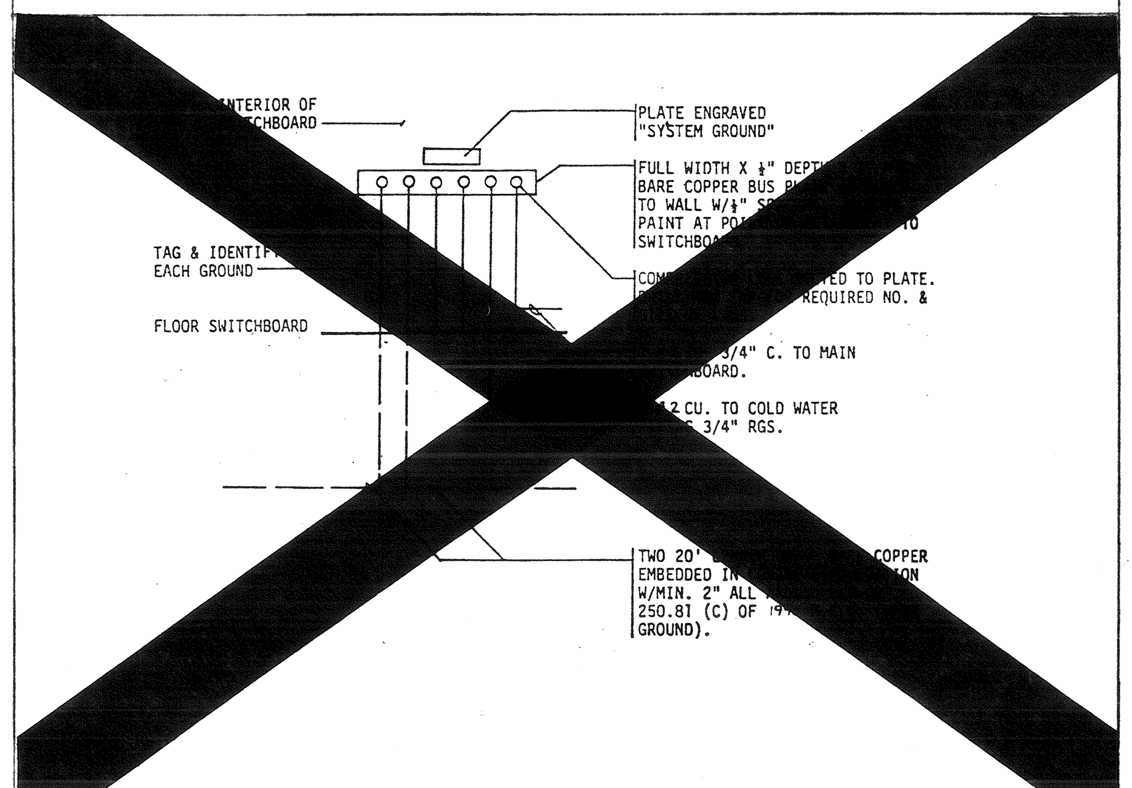

SYSTEM GROUND DETAIL

SCALE N.T.S. (3)

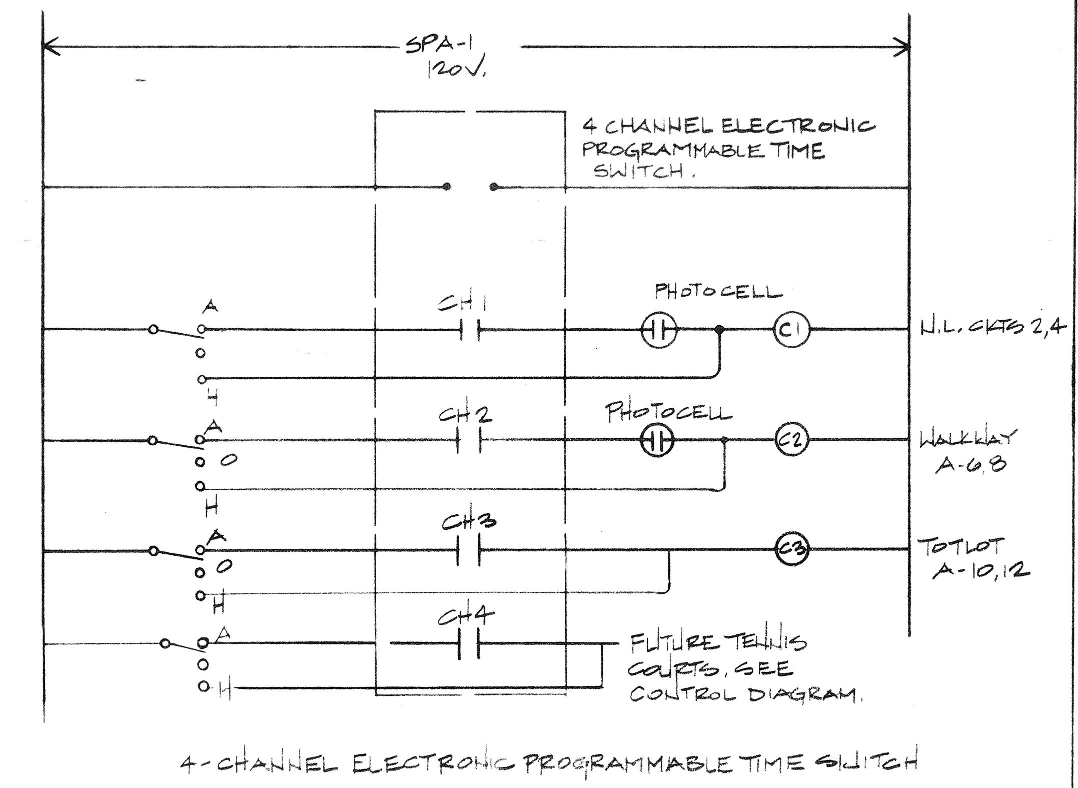

4-CHANNEL ELECTRONIC PROGRAMMABLE TIME SWITCH

(SECURITY LIGHT) CONTROL DIAGRAM

SCALE N.T.S. (4)

PANEL SPA — PANEL LOCATION: SERVICE PEDESTAL — MAIN (AMP) 200A MLO — BUS RATING 200 AMPS — 120/240 V - 1 Φ - 3 W — MOUNTING: CONT'L SECTION

LOCATION	VOLTAMPS ΦA	VOLTAMPS ΦB	LTG	REC	MIS	CIR	BKR	A	B	BKR	CIR	MIS	REC	LTG	VOLTAMPS ΦA	VOLTAMPS ΦB	LOCATION	
TIMER	180				1	1	15/1			20/	2			10	1000		WALKWAY LTS. N.L.	(1)
IRRIGATION CTLR		180			1	3	15/1			/2	4			—		1000		
REC	180			1		5	20/1			20/	6			11	1100		WALKWAY LTS.	(2)
TENNIS CTL		180				7	20/1			/2	8					1100		
TENNIS #1	1920					9	30/			20/	10			4	400		TOTLOT	(4)(3)
—		1920				11	/2			/2	12					400	—	
TENNIS #2	1920					13	30/			30/	14				—		SPARE	(4)
—		1920				15	/2			/2	16					—	—	
SPACE	—					17	—			30/	18				—		SPARE	
		—				19	—			/2	20					—	—	
	—					21	—			—	22				—		SPACE	
		—				23	—			—	24					—	"	
						25					26							
						27					28							
						29					30							
						31					32							
						33					34							
						35					36							
						37					38							
						39					40							
						41					42							

ΦA - 6700 ΦB - 6700

TOTAL CONNECTED VA	13400
LCL @ 125% 12680	15850
TOTAL OTHER LOAD	720
PANEL LOAD	16570
FEEDER AMPS	69.0A

1. N.L. (CKTS 2,4) ARE PHOTOCELL "ON" AND "OFF" SEE CNTRL DIAGRAM
2. WALKWAY (CKTS 6, 8) PHOTOCELL "ON" "TC" "OFF" @ 11:00 P.M.
3. CKTS 10, 12 "TOTLOT" - "TC" "ON" AND "OFF"
4. CKTS 14, 16 & 18, 20 ARE SPARE ONLY FOR FUTURE TENNIS COURT LTG.

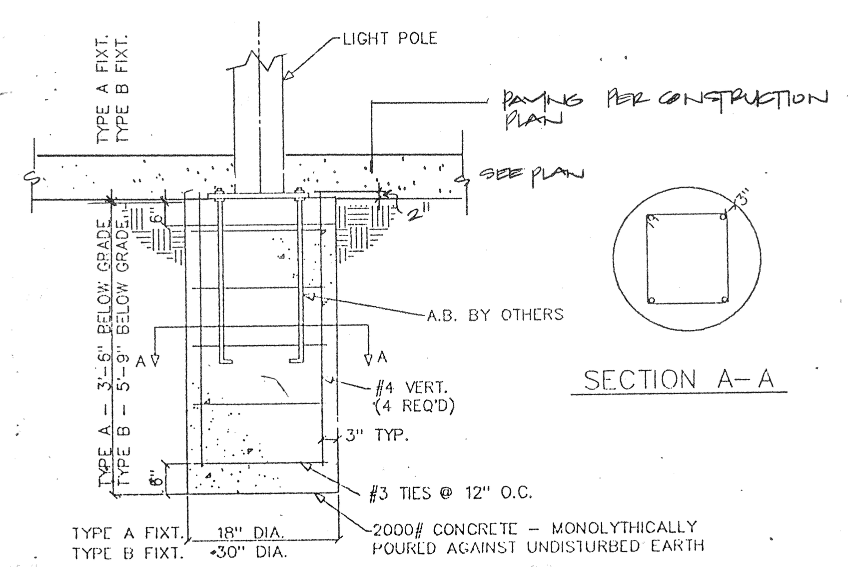

CONCRETE FOOTING

(7)

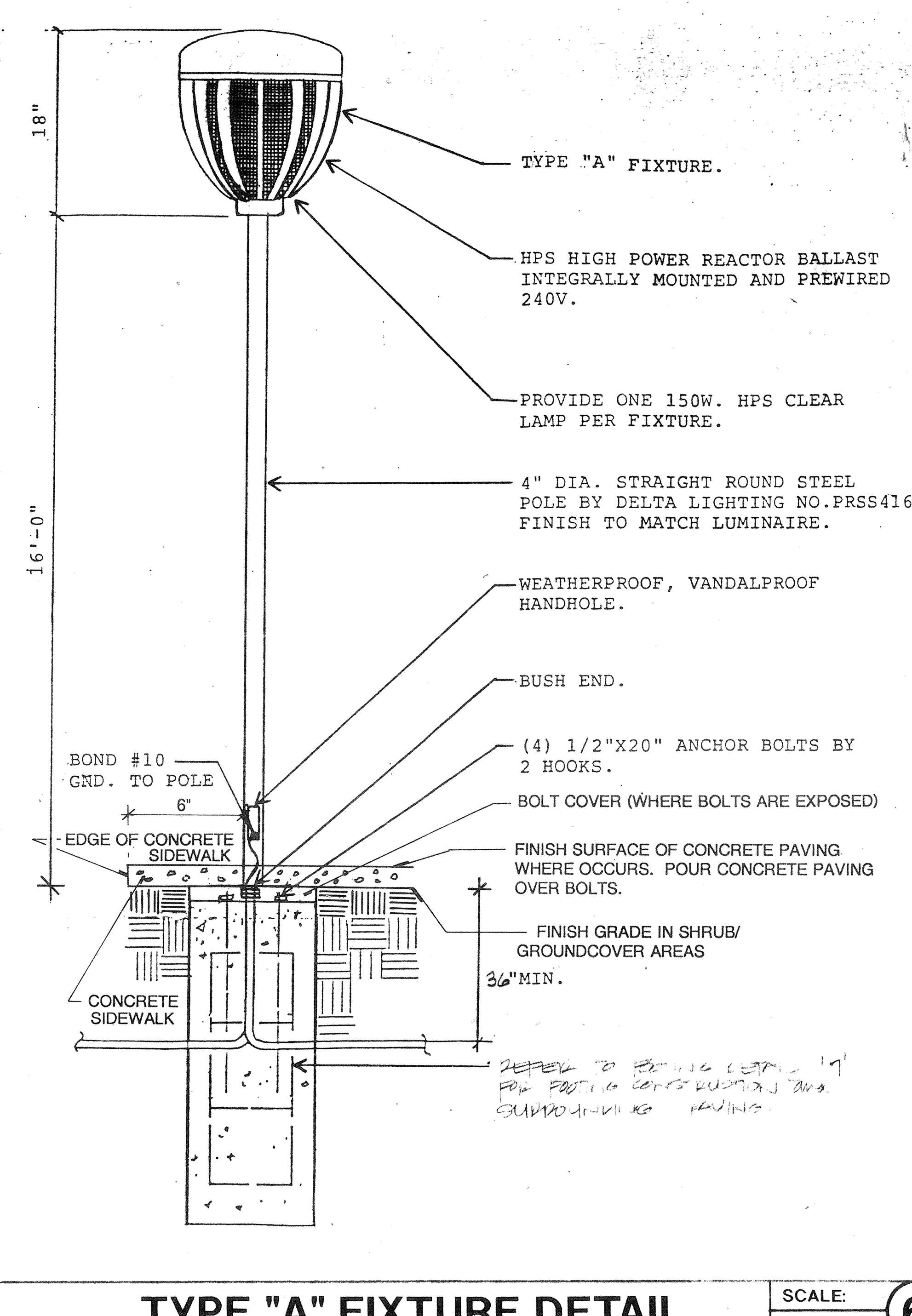

TYPE "A" FIXTURE DETAIL

SCALE: N.T.S. (6)

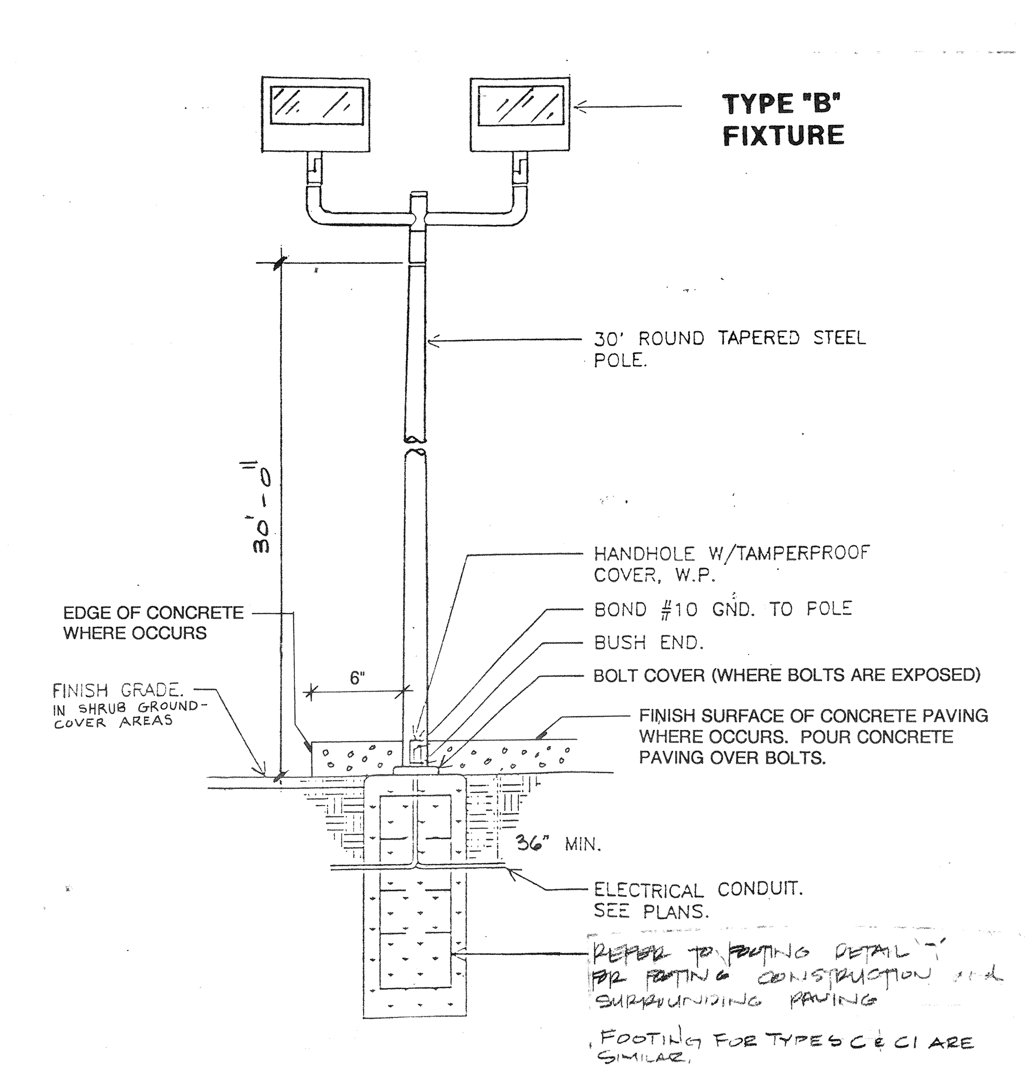

FIXTURE "B" DETAIL

SCALE N.T.S. (5)

21 - 581

RWR PASCOE
ELECTRICAL ENGINEERS • LIGHTING CONSULTANTS
One Venture, Suite 220 • Irvine, CA 92718 • (714) 753-4777 • FAX (714) 753-1588
3780 Twelfth Street • Riverside, CA 92501 • (714) 787-1880 • FAX (714) 787-1887

t. i. maloney, inc.
landscape architecture • planning
6180 Brockton Avenue, Suite 201 • Riverside, CA 92506
(714) 369-0700 fax (714) 369-4039

TAFT PARK
CITY OF RIVERSIDE
DEPARTMENT OF PARK AND RECREATION

SHEET DESCRIPTION: **GENERAL NOTES, ELECTRICAL SYMBOL LIST, SINGLE LINE DIAGRAM, LIGHTING FIXTURE SCHEDULE, CONTROL DIAGRAM, MAIN SWITCHBOARD ELEVATION, SYSTEM GROUND DETAIL, FIXTURE DETAIL**

REGISTERED LANDSCAPE ARCHITECT — TIMOTHY I. MALONEY NO. 2110 — Signature — 9-2-92 Date — STATE OF CALIFORNIA

9.30.91

DATE:	2/21/92
JOB NO.:	910308
DRAWN:	C.M.C.
CHECKED:	J.P.A. SR.
REVISIONS:	

SCALE: AS NOTED

E-2

PLAN NO. P-O928