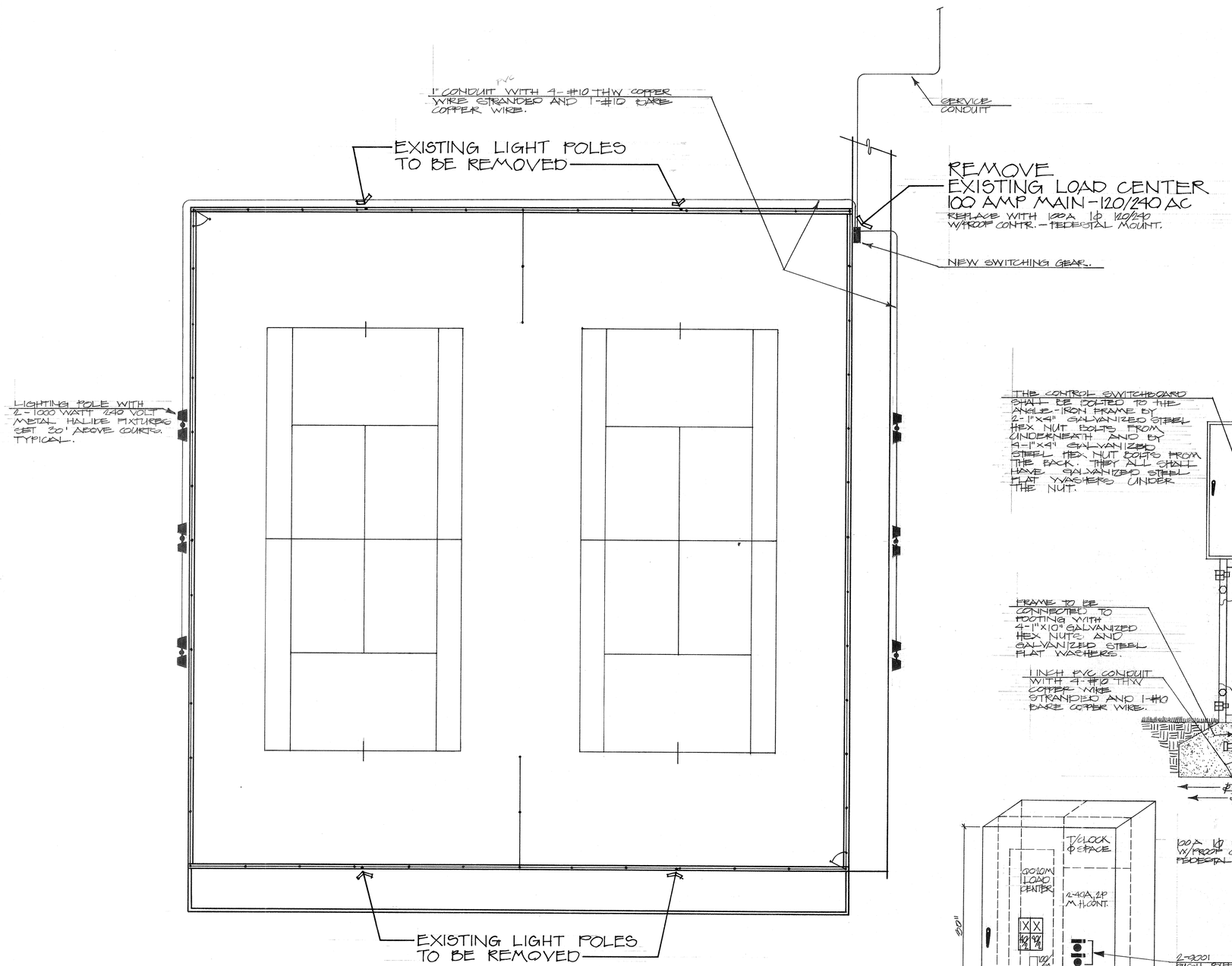

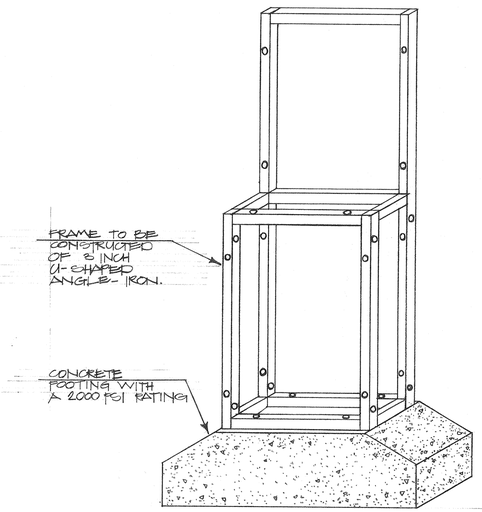

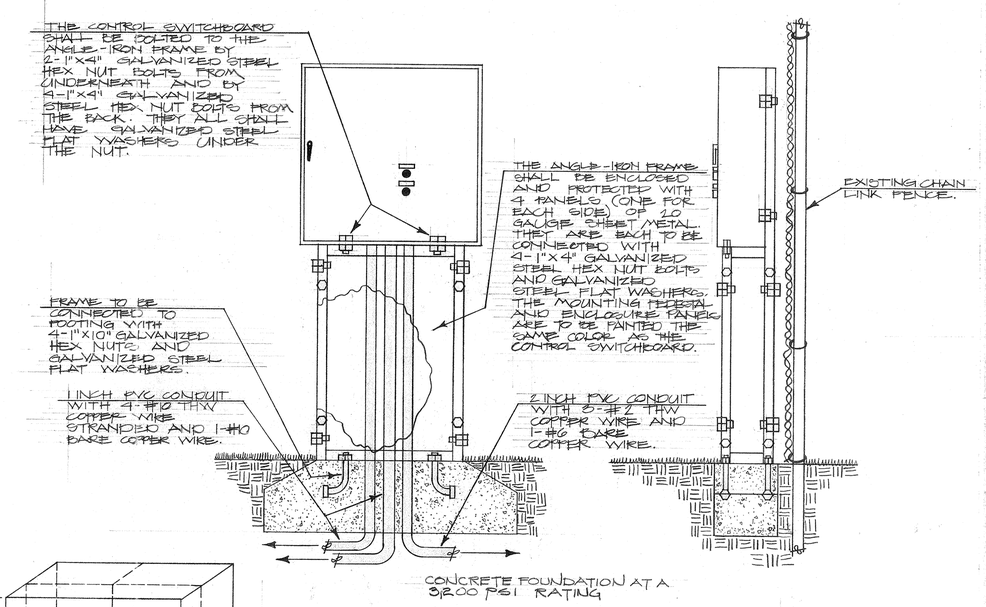

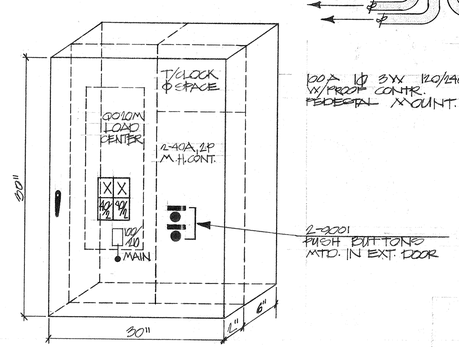

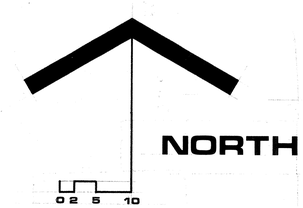

TENNIS COURTS

LIGHTING PLAN

SHAMEL PARK
3650 ARLETON
RIVERSIDE, CA

1"=10'

DEPARTMENT OF PARKS & RECREATION
CITY OF RIVERSIDE

DWG NO. 01-594-479

R.I.L.

4 9

P-15-22

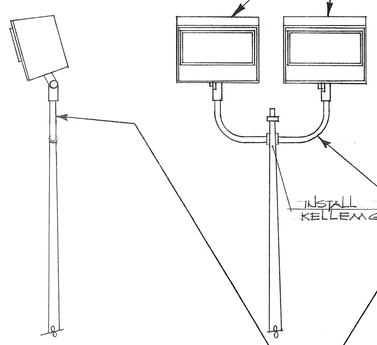

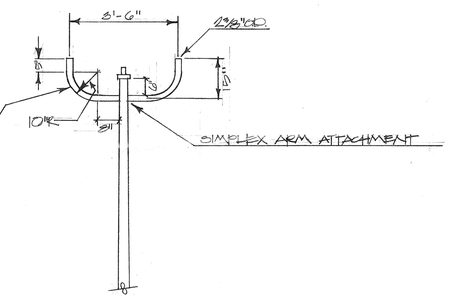

INSTALL KELLEM GRIP

LIGHTING FIXTURES: THE FIXTURES TO BE USED SHALL BE ONE OF THE FOLLOWING THREE TYPES:
a. MCGRAW EDISON 1000 WATT #HL-3181 (240V).
b. CROUSE-HINDS 1000 WATT #MA10MHP7 (240V).
c. GENERAL ELECTRIC 1000 WATT G537 G6190 (240V).
LAMPS: THE LAMPS TO BE USED IN EACH FIXTURE ARE 1000 WATT MULTI-VAPOR CLEAR LAMPS THAT CAN BURN IN ANY POSITION AND HAVE AN AVERAGE RATED LIFE OF 10,000 HOURS WITH AN INITIAL AVERAGE LUMENS FOR VERTICAL OPERATION OF 110,000 AND A MEAN AVERAGE LUMENS FOR VERTICAL OPERATION OF 88,000.

MAST ARM FITTINGS: THE POLES ARE TO BE FURNISHED WITH WEATHERPROOF MAST ARM FITTINGS THAT SIMPLY ATTACH WITH CAP SCREWS. THE ARM ATTACHMENT MOUNTING SHALL HOLD 2 FIXTURES BOTH FACING ONE DIRECTION.

THE LIGHTING POLES ARE TO BE HOT DIPPED GALVANIZED SHAFTS FABRICATED FROM 11-GAUGE MILD, LOW CARBON STEEL AND COLD PROCESSED TO A MINIMUM YIELD STRENGTH OF 55,000 PSI. THE POLES ARE TO BE 30 FEET TALL WITH AN 8" DIAMETER BASE TAPERING TO 3.8" AT THE TOP OF THE POLE AND FURNISHED WITH A 2" STANDARD PIPE TENON WITH A 2.375" OD. THE POLES MUST BE GUARANTEED TO WITHSTAND CONTINUOUS WINDS OF 100 MPH AND GUSTS OF WINDS UP TO 125 MPH AND SHALL CONFORM TO EEI-NEMA STANDARDS FOR STEEL POLES. 6 POLES ARE TO BE PROVIDED FOR THE 2 COURTS.

POLE TOP: ORNAMENTAL ALUMINUM POLE TOPS ARE TO BE FURNISHED WITH EACH POLE.

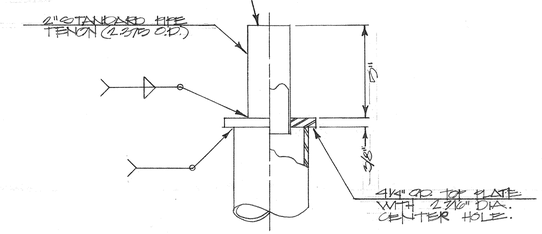

TENON DETAIL

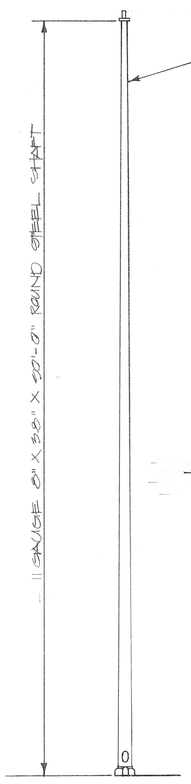

4-1" DIA. X 36" GALVANIZED STEEL FLAT WASHERS

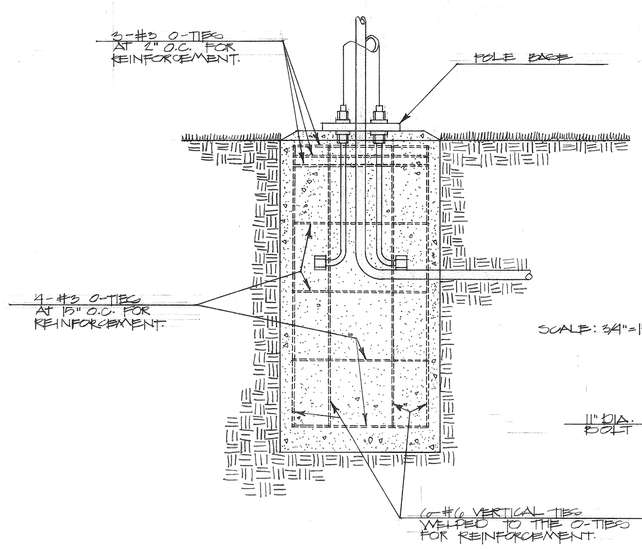

REINFORCED CONCRETE FOOTING AT A 3,000 PSI RATING

SCALE: 3/4" = 1'-0"

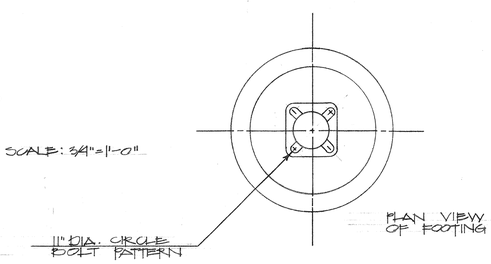

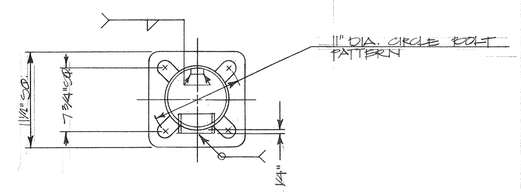

BASE DETAIL

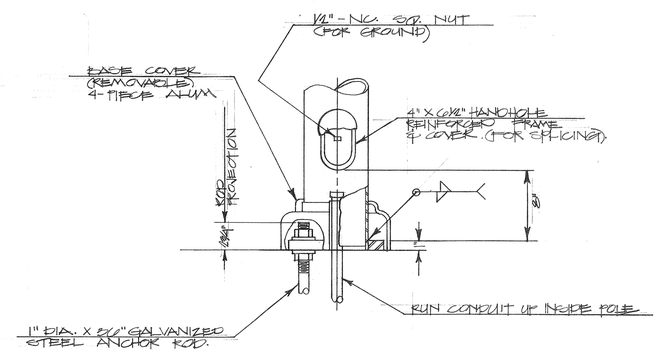

PARKS & RECREATION DEPARTMENT
CITY OF RIVERSIDE

REVISIONS
JOB NO. 31-5972-02
DATE:

SHAMELPARK
365 OARL TON
RIVERSIDE, CA

LIGHTING DETAILS
SCALE: 1" = 10'

5 9

P-155-21