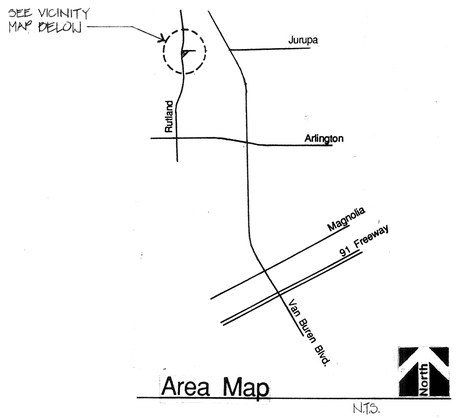

Area Map

N.T.S.

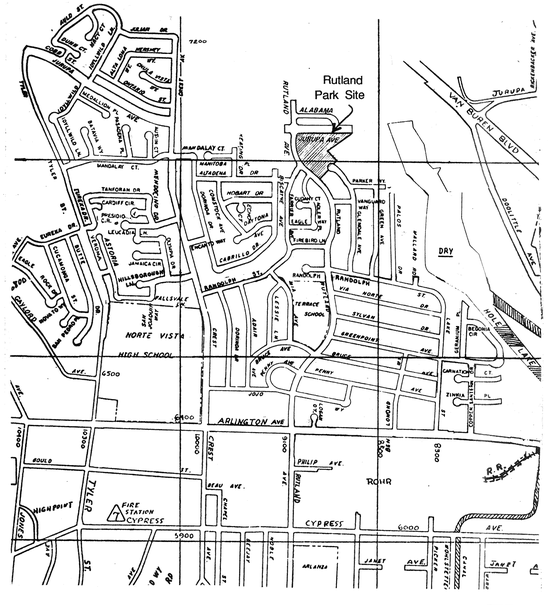

Vicinity Map

N.T.S.

Plans of : Phase 1 Development

Rutland Park

7000 , Rutland Avenue
Riverside , California

Prepared for :

Park and Recreation Department
The City of Riverside
3900 Main Street
Riverside , CA 92522

Sheet Index :

T-1	Cover Sheet
C-1	Site Demolition Plan
C-2	Site Demolition Plan
C-3	Site Grading Plan
C-4	Site Grading Plan
C-5	Site Construction Plan
C-6	Site Construction Plan
C-7	Basketball Court and Picnic Shelter Layout and Details
C-8	Play Area Equipment Plan and Details
C-9	Construction Details
C-10	Tennis Court /, Handball Construction Plan (Alt. Bid A)
C-11	Tennis Court /, Handball Construction Details (Alt. Bid A)
C-12	Tennis Court /, Handball Grading (Alt. Bid A).
L-1	Site Irrigation Plan
L-2	Site Irrigation Plan
L-3	Site Planting Plan
L-4	Site Planting Plan
L-5	Irrigation Details
L-6	Tennis Court /, Handball Irrigation Plan (Alt. Bid A)
E-1	Site Electrical Plan
E-2	Single Line Diagram / Details
E-3	Breaker Assignment

Approvals

Director, Park and Recreation Dept.	Date 9/16/89
Park Superintendent	Date 8/16/89
Recreation Superintendent	Date 8-16-89
Park Planning Coordinator	Date 8-16-89

LANDSCAPE ARCHITECTURE AND PLANNING
515 W. COMMONWEALTH, SUITE 205
FULLERTON, CA 92632 (714)773-0973
ASLA
Heimberger Hirsch

Project;
Rutland Park
The City of Riverside
3900 Main Street
Riverside, CA 92522

REGISTERED LANDSCAPE ARCHITECT
CARL O. HEIMBERGER
#1523
Signature
3-20-89
Date
STATE OF CALIFORNIA

Date; MARCH 20, 1989
Design; HEIMBERGER
Job No; 88007

Description;
COVER SHEET

Sheet 1 OF 22
DWG. # T-1
P-0418

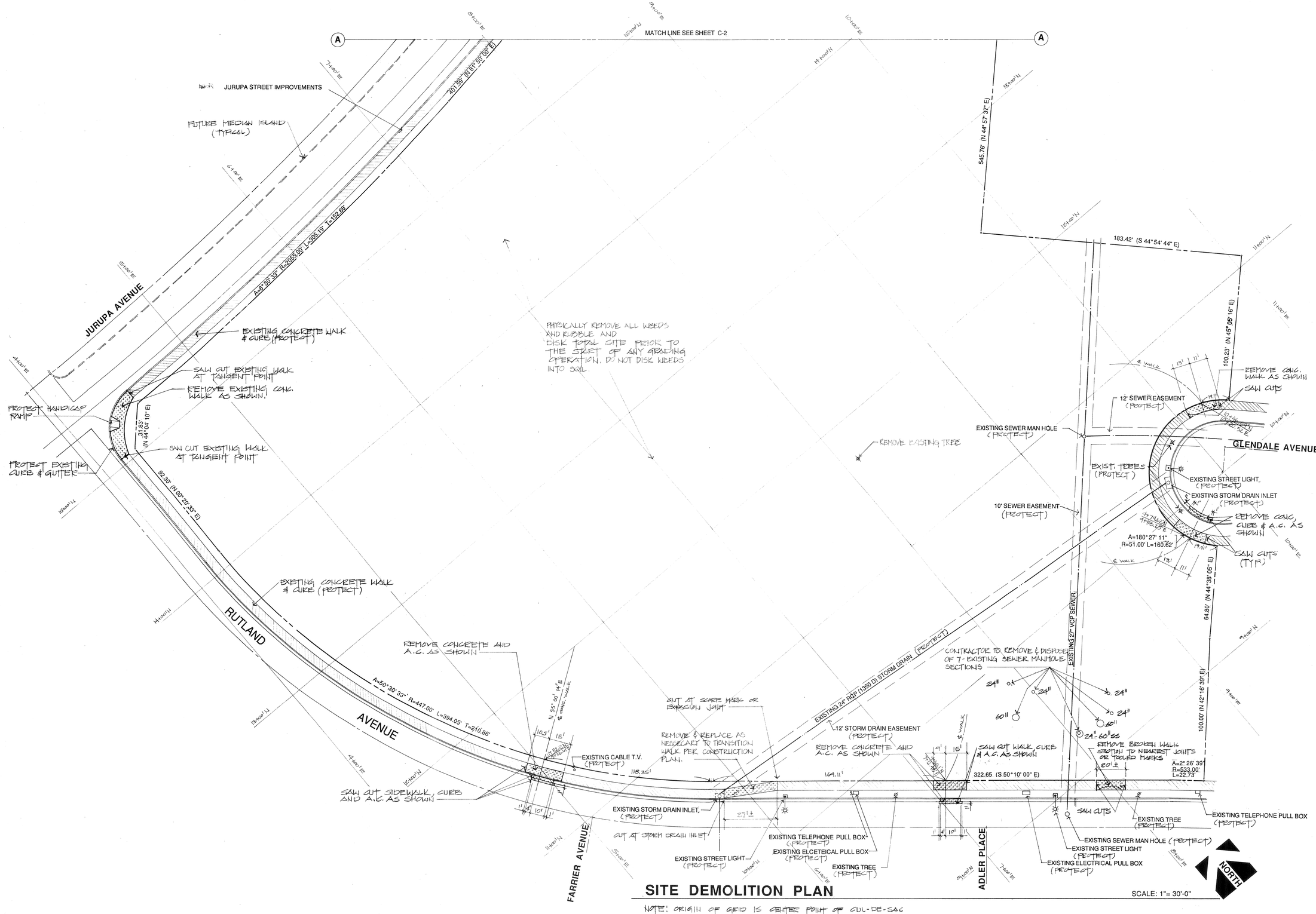

SITE DEMOLITION PLAN

SCALE: 1"= 30'-0"

NOTE: ORIGIN OF GRID IS CENTER POINT OF CUL-DE-SAC ON GLENDALE AVE. 10+00' N & 10+00' E

LANDSCAPE ARCHITECTURE AND PLANNING

515 W. COMMONWEALTH, SUITE 205
FULLERTON, CA 92632 (714) 773-0973

ASLA

Heimberger Hirsch

Project;

Rutland Park

The City of Riverside
3900 Main Street
Riverside, CA 92522

REGISTERED LANDSCAPE ARCHITECT
CARL O. HEIMBERGER
#1522
Signature
3-20-89
Date
STATE OF CALIFORNIA

Date; MARCH 20,1989
Design; HEIMBERGER
Job No; 88007

Description;
SITE DEMOLITION PLAN

Sheet 2 OF 22
DWG. # C-1
P-0418

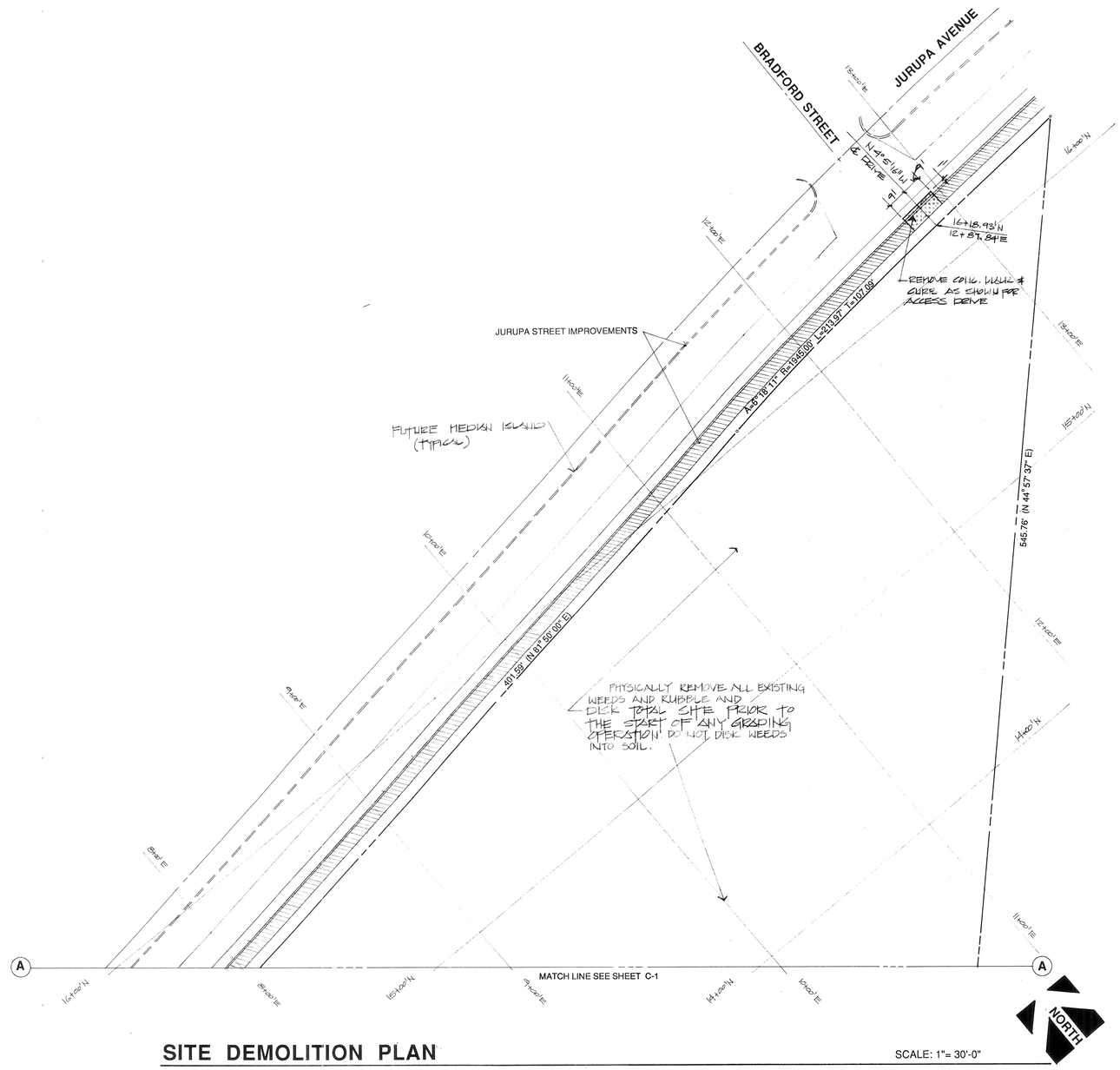

SITE DEMOLITION PLAN

SCALE: 1"= 30'-0"

NOTE: ORIGIN OF GRID IS CENTER POINT OF CUL-DE-SAC ON GLENDALE AVE. 16+00'N & 16+00'E

LANDSCAPE ARCHITECTURE AND PLANNING
515 W. COMMONWEALTH, SUITE 205
FULLERTON, CA 92632 (714) 773-0973
ASLA
Heimberger Hirsch

Project;

Rutland Park

The City of Riverside
3900 Main Street
Riverside, CA 92522

REGISTERED LANDSCAPE ARCHITECT
CARL O. HEIMBERGER
#1523
Signature
3-20-89
Date
STATE OF CALIFORNIA

Date; MARCH 20, 1989
Design; HEIMBERGER
Job No; 88007

Description;
SITE DEMOLITION PLAN

Sheet 3 OF 22
DWG. # C-2
P-0418

Typical Section Through Mound (B)

SCALE: HORIZONTAL: 1" = 20'-0" VERTICAL: 1" = 20'-0"

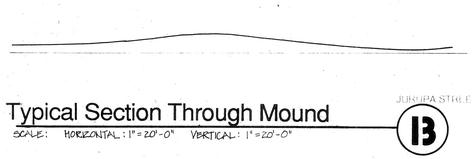

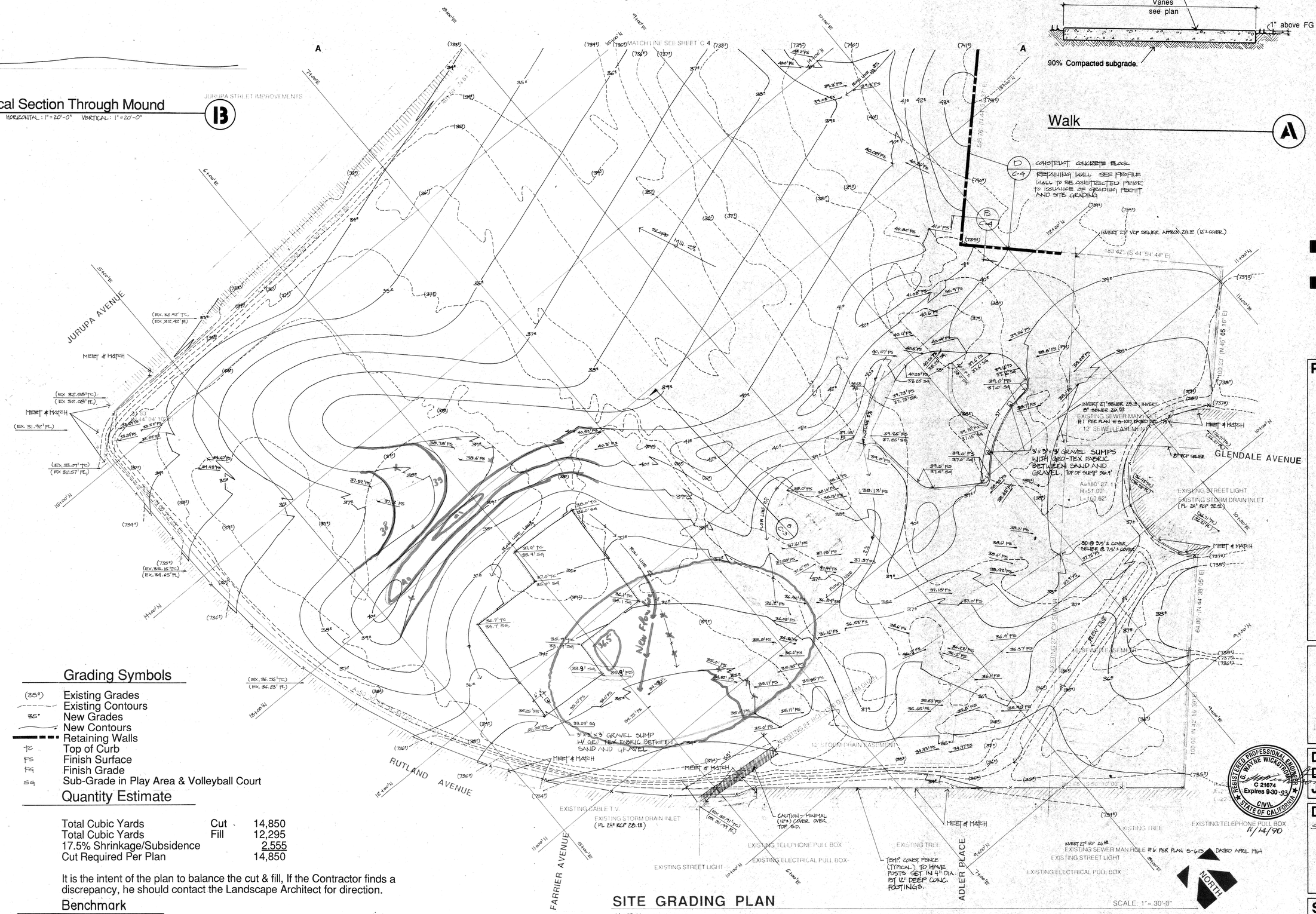

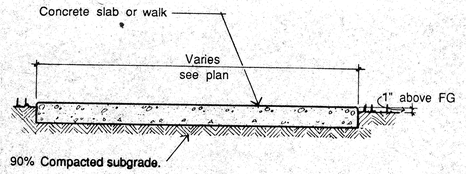

Walk (A)

Grading Symbols

(35°)	Existing Grades
	Existing Contours
35°	New Grades
	New Contours
	Retaining Walls
TC	Top of Curb
FS	Finish Surface
FG	Finish Grade
SG	Sub-Grade in Play Area & Volleyball Court

Quantity Estimate

Total Cubic Yards	Cut	14,850
Total Cubic Yards	Fill	12,295
17.5% Shrinkage/Subsidence		2,555
Cut Required Per Plan		14,850

It is the intent of the plan to balance the cut & fill, If the Contractor finds a discrepancy, he should contact the Landscape Architect for direction.

Benchmark

1" iron pipe at the centerline intersection of Rutland Avenue and Adler Place per City of Riverside Field Book LL19/45A. Elevation 733.42'.

SITE GRADING PLAN

NOTE: ORIGIN OF GRID IS CENTER POINT OF CUL-DE-SAC ON GLENDALE AVE. 10+00'N & 10+00'E

ALL CONCRETE WALKS, SLABS & CURBS TO BE 1" (0.08') ABOVE FINISH GRADE - SEE DETAIL "A" THIS PAGE.

ALL PERIMETER WALLS & FENCES (INCLUDING TEMPORARY CONST. FENCE) ARE TO BE IN PLACE PRIOR TO START OF THIS WORK. SEE SITE CONSTRUCTION PLANS C-5 & C-6

EPC REVIEW NOT REQUIRED
PLANNING DEPT.
J. Clay Tarr 4-12-89
NAME DATE

LANDSCAPE ARCHITECTURE AND PLANNING
515 W. COMMONWEALTH, SUITE 205
FULLERTON, CA 92632 (714) 773-0973
ASLA
Heimberger Hirsch
CITY ELIS. TAX CERTIF. NO. C41788 EXP. DATE 03/22/90

Project;

Rutland Park

The City of Riverside
3900 Main Street
Riverside, CA 92522

REGISTERED LANDSCAPE ARCHITECT CARL O. HEIMBERGER 1523 Signature 3-20-89 Date STATE OF CALIFORNIA

REGISTERED PROFESSIONAL ENGINEER DWAYNE WICKS RUTLEDGE C 21674 Expires 9-30-93 CIVIL STATE OF CALIFORNIA

Date; MARCH 20, 1989
Design; HEIMBERGER
Job No; 88007

Description;
SITE GRADING PLAN

As Built 4/14/90

Sheet 4 OF 22
DWG. # C-3
P-0418

General Notes:

1. All grading shall conform to Chapter 70 of the current city adopted edition of the Uniform Building Code.
2. This plan is for grading purposes only. Issuance of a permit based on this plan does not constitute approval of drive locations or size, parking lot structural sections or layout, building locations, off-site drainage facilities or other items not related directly to the basic grading operation.
3. Certification from the registered Landscape Architect is required prior to building permits being issued. Certification shall state that the grading has been completed per the approved plan.
4. Contractor is responsible for erosion, dust and temporary drainage control during grading operations.
   a. All manufactured slopes in excess of 5' in vertical height are to protected from erosion during rough grading operations, and thereafter, until installation of final ground cover. (See landscape plans for final ground cover.)
   b. All slope protection swales to be constructed at the same time as banks are graded.
   c. The Developer and his Contractor are responsible for implementation and maintenance of the erosion control measures shown on this plan and also to provide any additional erosion control measures (e.g., hydroseeding, mulching of straw, sand bagging, diversion ditches, retention basins, etc.) dictated by field conditions to prevent erosion and/or the introduction of dirt, mud or debris to existing public streets and/or onto adjacent properties during any phase of construction operations. Special attention shall be given to additional erosion control measures noted above during the period October 15 to April 15.
   d. After a rain storm, all silt and debris shall be removed from check berms and check dams. Silt and debris shall be removed from City of Riverside streets. This requirement shall remain in effect until city acceptance of the subdivision that drains onto city streets.
5. Any on-site retaining walls shown on this plan that are under 3' in height and support a surcharge or that are over 3' in height require separate review, approval and a building permit from the Building Division, Planning Department. Any necessary retaining walls on the perimeter of this site shall be in place and approved by the Building Inspector prior to issuance of the grading permit. Approved sequenced grading with 1-1/2:1 maximum slopes to within 2' of the adjacent property line may be acceptable to allow for issuance of a grading permit prior to completion of any necessary perimeter retaining walls.
6. Any improvements constructed in the public right-of-way will require a separate construction permit and inspection from the Public Works Department.
7. Any walls, fences, structures and/or appurtenances adjacent to this property are to be protected in place. If grading operations damage or adversely affect said items in any way, the Contractor and/or Developer is responsible for working out an acceptable solution to the satisfaction of the affected property owner (s).
8. The Contractor/Developer is responsible for ensuring that retaining walls do not interfere with provision of utilities.
9. It is the Grading Contractor's responsibility to ensure that adequate compaction has been attained on the entire grading site, including fill areas outside the building pads and on all fill slopes.
10. It is the Soil Engineer's responsibility to observe compaction tests during the grading to evaluate the preparation of the natural ground surface to receive the fill and the compaction attained in the fill areas outside the building pads and on all fill slopes.
11. Earthwork quantities are shown for grading permit purposes only and the City of Riverside is not responsible for their accuracy.

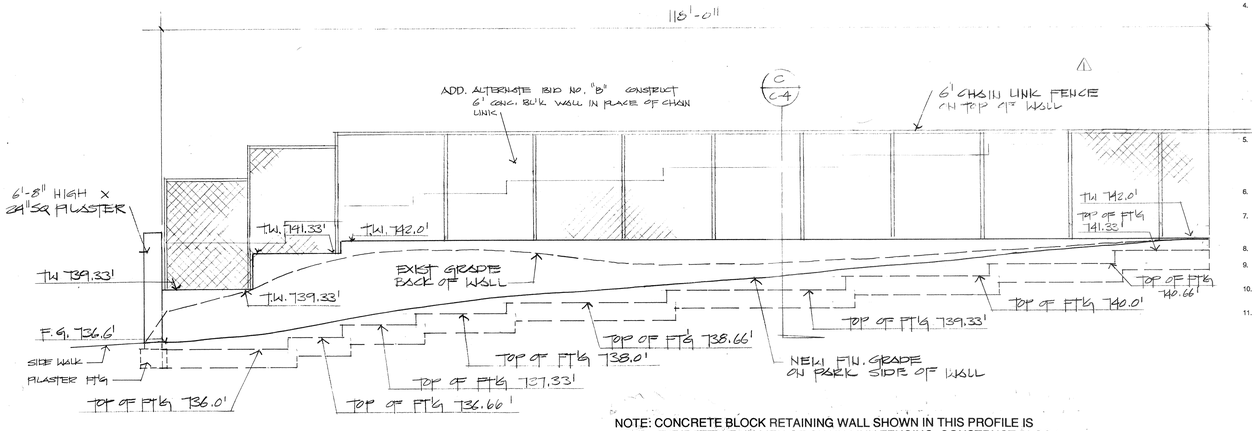

NOTE: CONCRETE BLOCK RETAINING WALL SHOWN IN THIS PROFILE IS ADD/ALT. BID ITEM 'B' IN LIEU OF CHAIN LINK FENCING, CONSTRUCT BLOCK WALL TO A HEIGHT OF 6' FOR BASE BID, GRADE AREA PER PLAN ON DWG-12 & CONSTRUCT TYPICAL CHAIN LINK FENCE PER E/C-6. △1

Profile Retaining Wall Type "C"

Scale 1/8" =1'-0" Horiz., 1/4"=1'-0" Vert. (A)

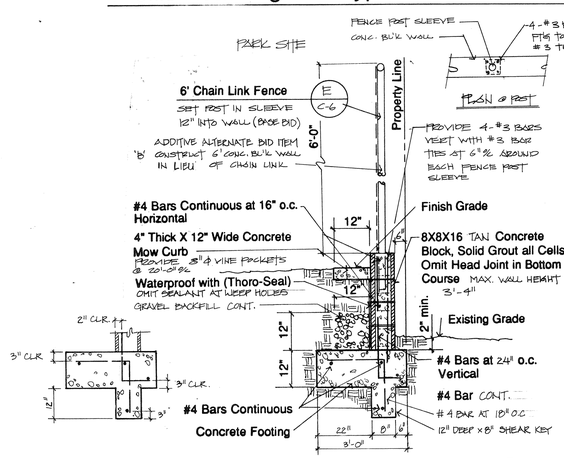

Property Line Retaining Wall "B"

Scale: 1/2" - 1'-0" (B)

Note: Retaining wall & chain link fence are included in base bid. Additive Alternate "B" construct concrete block wall in lieu of the chain link fence.

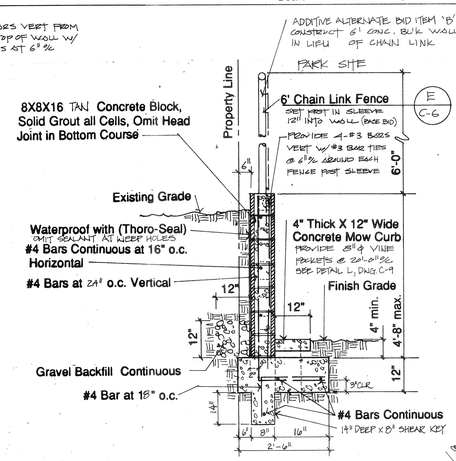

Property Line Retaining Wall "C"

Scale: 1/2" - 1'-0" (C)

NOTE: RETAINING WALL & CHAIN LINK FENCE ARE ADD/ALT. ITEM 'C'. ADD/ALT. ITEM 'B' CONSTRUCT CONCRETE BLOCK WALL IN LIEU OF THE CHAIN LINK FENCE. IN BASE BID GRADE PER PLAN B/C-12 AND CONSTRUCT CHAIN LINK FENCE PER DETAIL E/C-6. △1 A

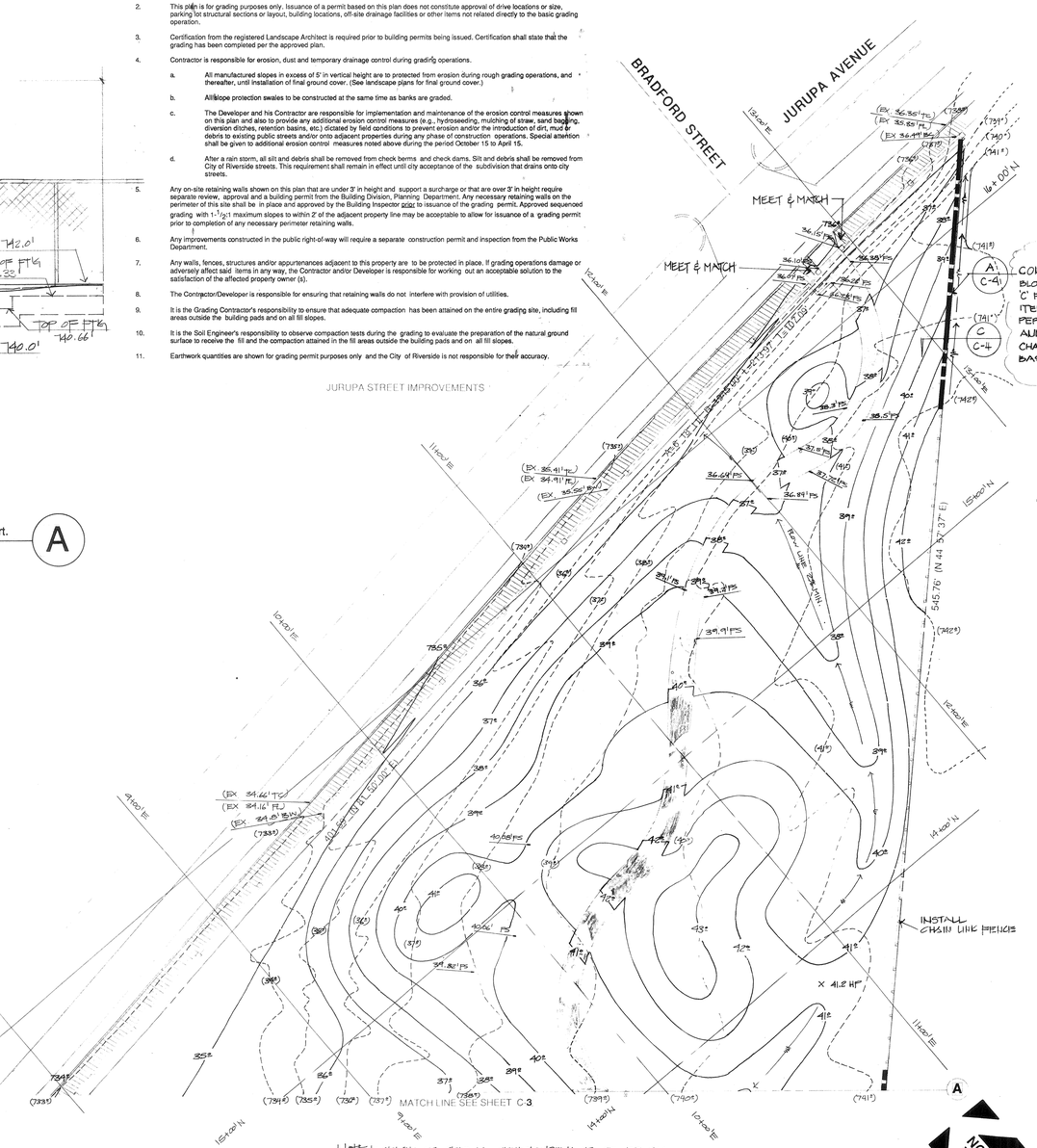

NOTE: • ORIGIN OF GRID IS CENTER POINT OF CUL-DE-SAC ON GREENDALE AVE. 10+00' N & 10+00' E
• SEE DWG. C-3 FOR VERTICAL CONTROL BENCHMARK INFO
• ALL PERIMETER WALLS & FENCES TO BE COMPLETE PRIOR TO START OF THIS WORK

SITE GRADING PLAN

SCALE: 1"= 30'-0"

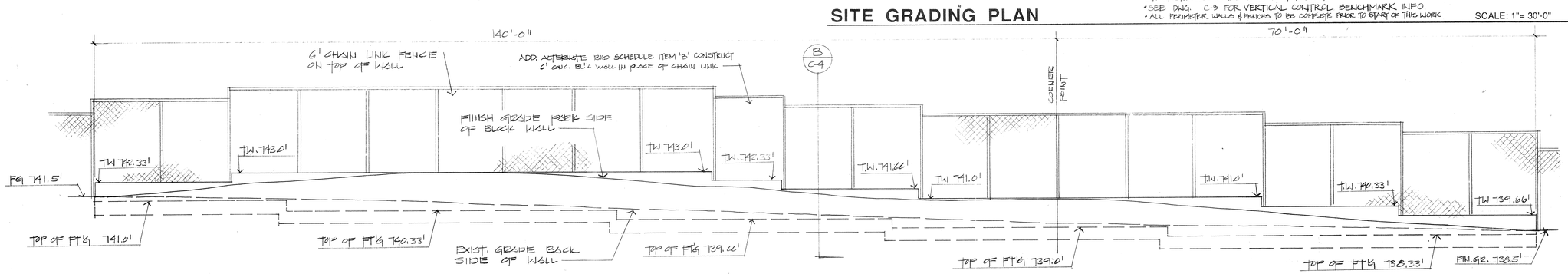

Profile Retaining Wall Type "B"

Scale 1/8"= 1'-0" Horiz., 1/4"=1'-0" Vert. (D)

Note: Concrete block retaining wall shown in this profile is base bid together with chain link fence. Additive Alternate "B" in lieu of chain link fence, construct 6' block wall on top of retaining wall.

EPC REVIEW NOT REQUIRED
PLANNING DEPT
J. Cau Tarson 4-12-89
NAME DATE

LANDSCAPE ARCHITECTURE AND PLANNING
515 W. COMMONWEALTH, SUITE 205
FULLERTON, CA 92632 (714) 773-0973
ASLA
Heimberger Hirsch

Project;

Rutland Park

The City of Riverside
3900 Main Street
Riverside, CA 92522

REGISTERED LANDSCAPE ARCHITECT
CARL O. HEIMBERGER
#1523
Signature
3-20-89
Date
STATE OF CALIFORNIA

Date; MARCH 20, 1989
Design; HEIMBERGER
Job No; 88007

Description;
SITE GRADING PLAN
△1 10/18/89 ADDENDUM NO. ONE

Sheet 5 OF 22
DWG. # C-4
P-0418

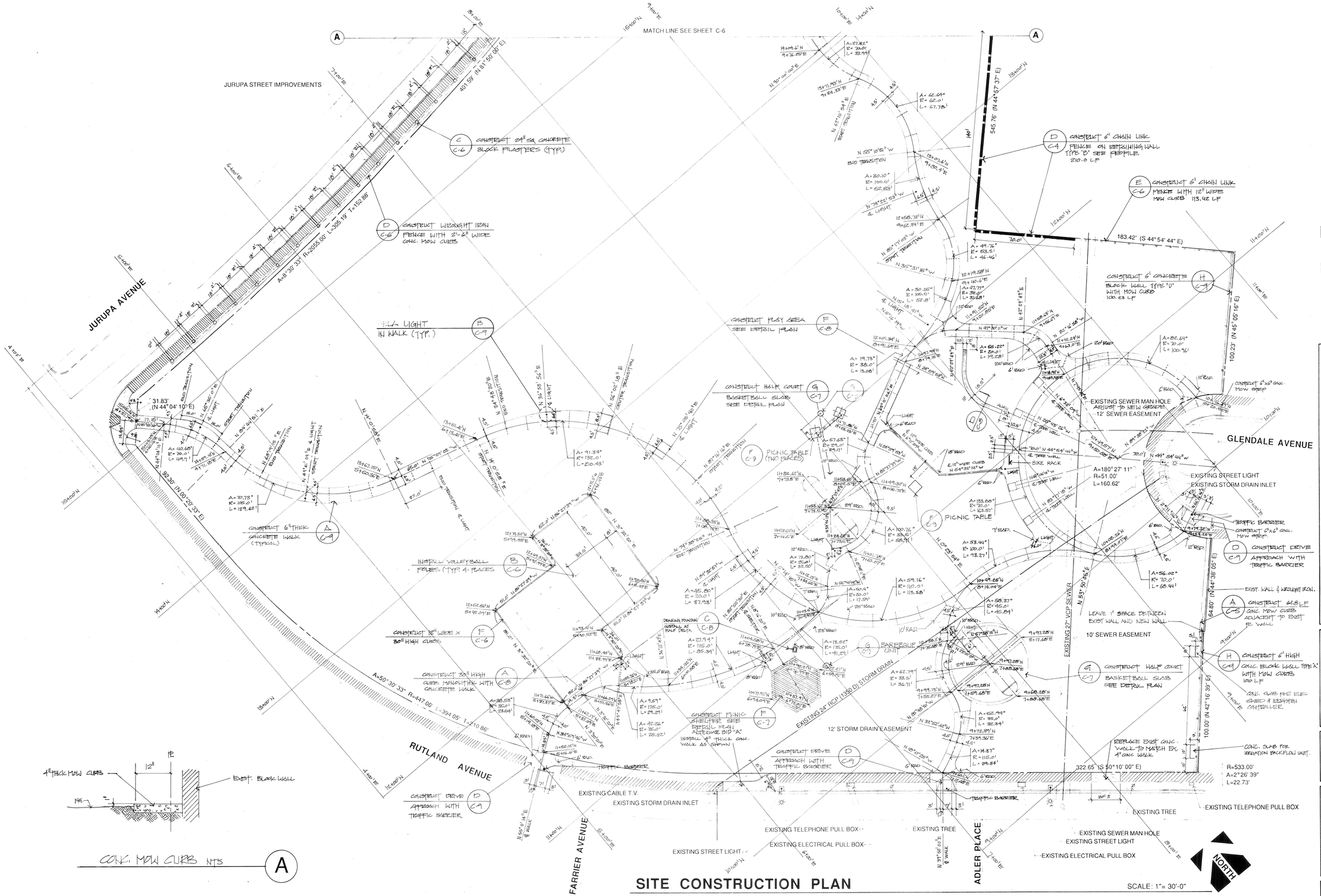

SITE CONSTRUCTION PLAN

SCALE: 1"= 30'-0"

NOTE: ORIGIN OF GRID IS CENTER POINT OF CUL-DE-SAC ON GLENDALE AVE. 10400' N & 10400' E

ALL CONCRETE WALKS, SLABS & CURBS TO BE 1" (0.08') ABOVE FINISH GRADE

LANDSCAPE ARCHITECTURE AND PLANNING
515 W. COMMONWEALTH, SUITE 205
FULLERTON, CA 92632 (714)773-0973
ASLA
Heimberger Hirsch

Project;

Rutland Park

The City of Riverside
3900 Main Street
Riverside, CA 92522

REGISTERED LANDSCAPE ARCHITECT
CARL O. HEIMBERGER
1523
Signature
3-20-89
Date
STATE OF CALIFORNIA

Date; MARCH 23 1989
Design; HEIMBERGER
Job No; 88007

Description;
SITE CONSTRUCTION PLAN

Sheet 6 OF 22
DWG. # C-5
P-0418

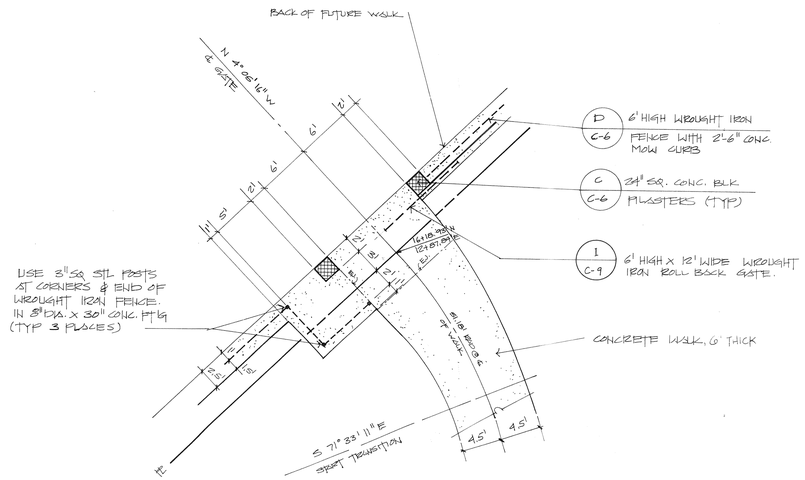

Entry Gate Detail

Scale 1/8"=1'-0" (A)

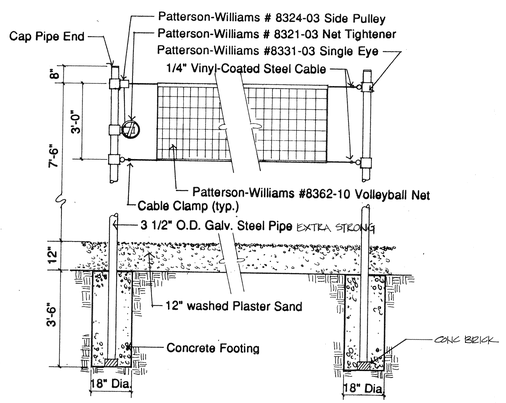

Volleyball Net

scale: 3/8" = 1'-0" (B)

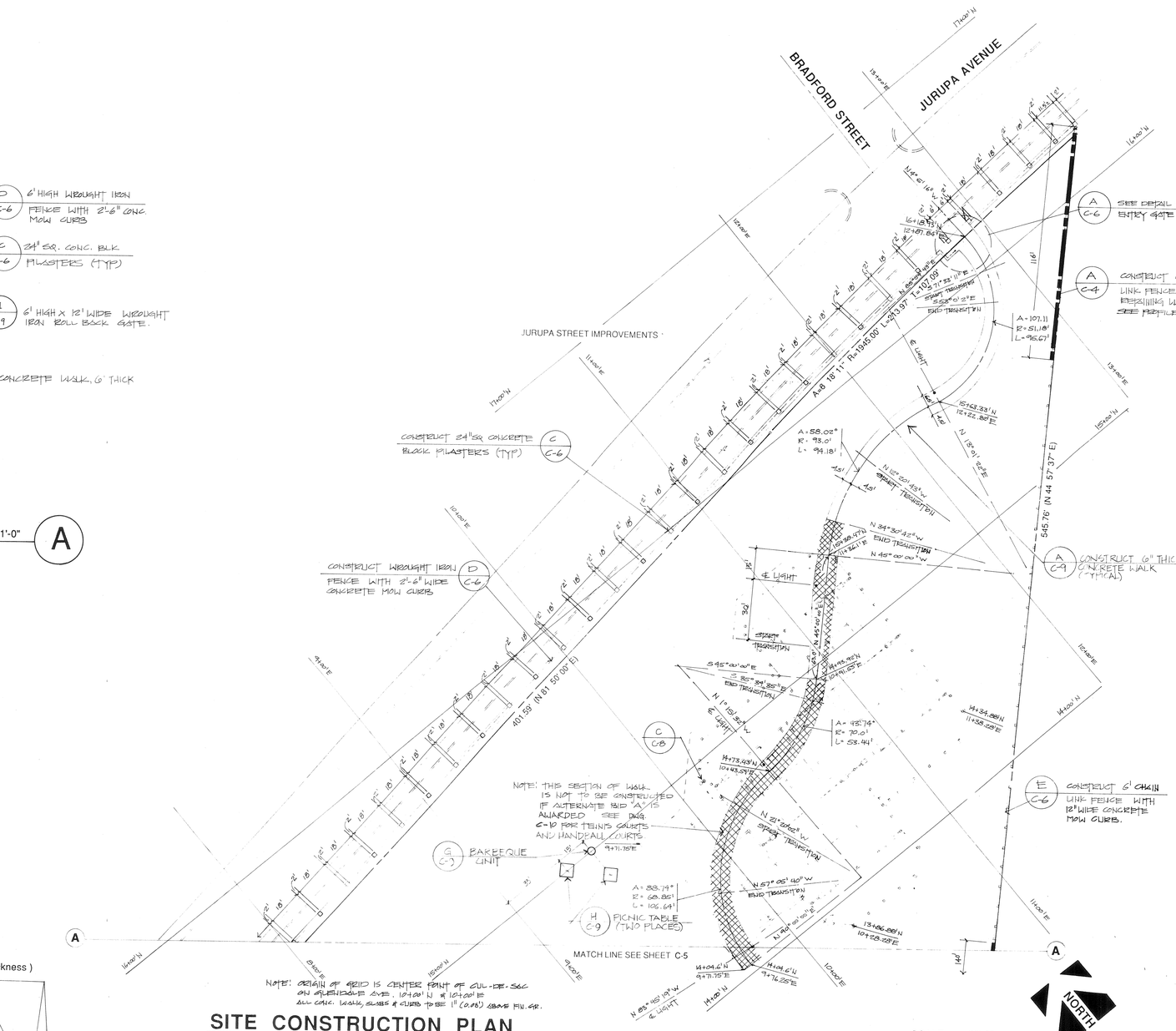

NOTE: ORIGIN OF GRID IS CENTER POINT OF CUL-DE-SAC ON ALESSANDRO AVE. 10+00' N & 10+00' E
ALL CONC. WALK, SLABS & CURB TO BE 1" (0.08') ABOVE FIN. GR.

SITE CONSTRUCTION PLAN

SCALE: 1"= 30'-0"

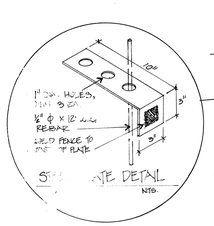

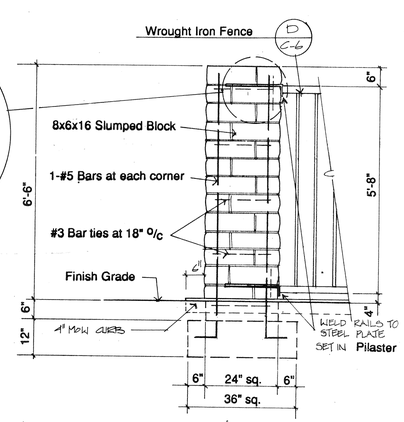

24" Sq. Block Pilaster

Scale 1/2"=1'-0" (C)

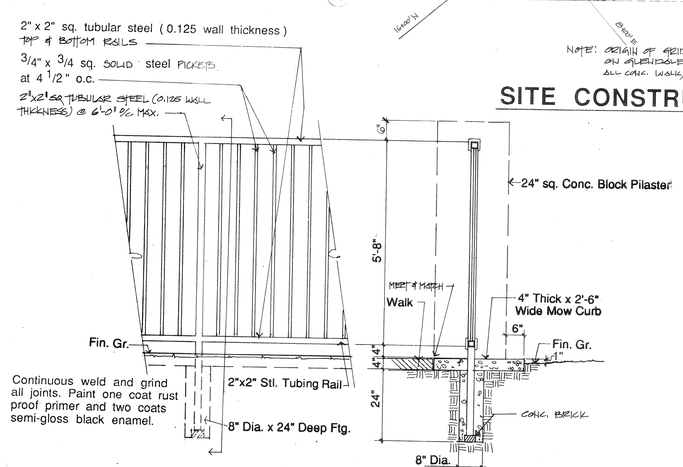

Continuous weld and grind all joints. Paint one coat rust proof primer and two coats semi-gloss black enamel.

Wrought Iron Fence

Scale 1/2"=1'-0" (D)

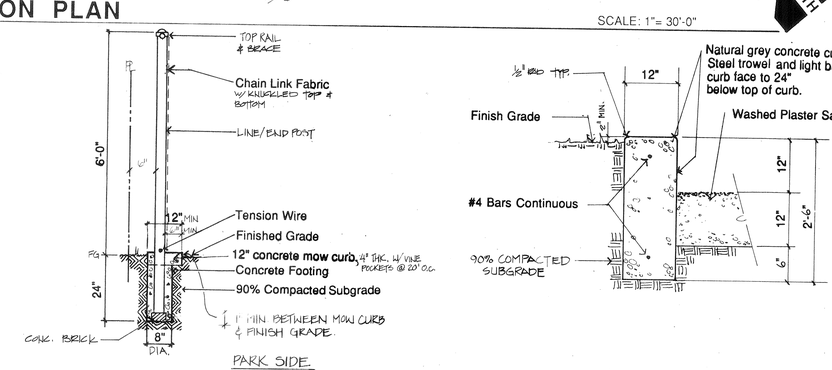

6 Ft. Chainlink Fencing

(E)

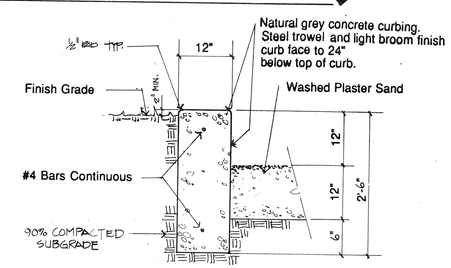

Play Area/Volleyball Court Curb

(F)

LANDSCAPE ARCHITECTURE AND PLANNING
515 W. COMMONWEALTH, SUITE 205
FULLERTON, CA 92632 (714)773-0973
ASLA
Heimberger Hirsch

Rutland Park

The City of Riverside
3900 Main Street
Riverside, CA 92522

Project;

Date; MARCH 22, 1989
Design; HEIMBERGER
Job No; 88007

Description;
SITE CONSTRUCTION PLAN & CONSTRUCTION DETAILS

Sheet 7 OF 22
DWG. # C-6
P-0418

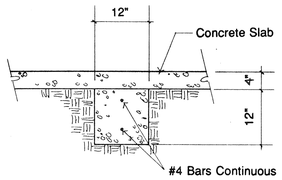

Grade Beam

Scale: 3/4" = 1'-0" (A)

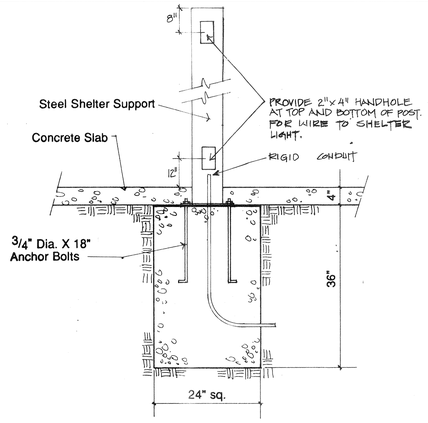

Picnic Shelter Footings

Scale: 3/4" = 1'-0" (B)

Iron Mountain Forge pedestal mount picnic table #266-XV. Top and seats to be vinyl coated. Color will be tan to match play equipment. Install per manufactures specifications.

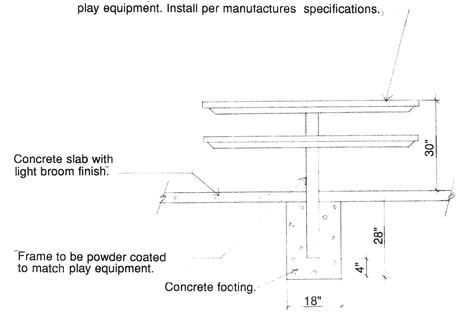

Picnic Table

(C)

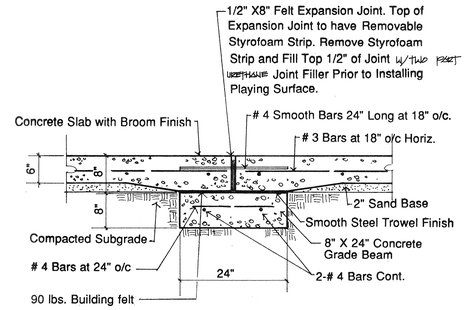

Grade Beam/Expansion Joint

Scale: 3/4"= 1'-0" (D)

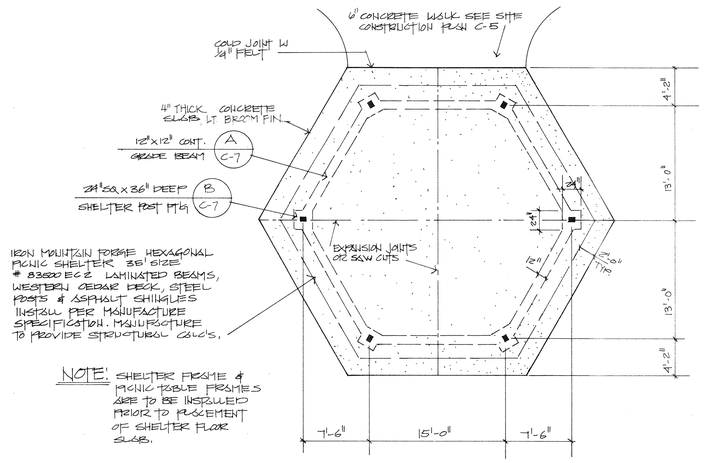

NOTE: SHELTER FRAME & PICNIC TABLE FRAMES ARE TO BE INSTALLED PRIOR TO PLACEMENT OF SHELTER FLOOR SLABS.

Picnic Shelter, Slab & Footing

Scale 1/8" = 1'-0" (E)

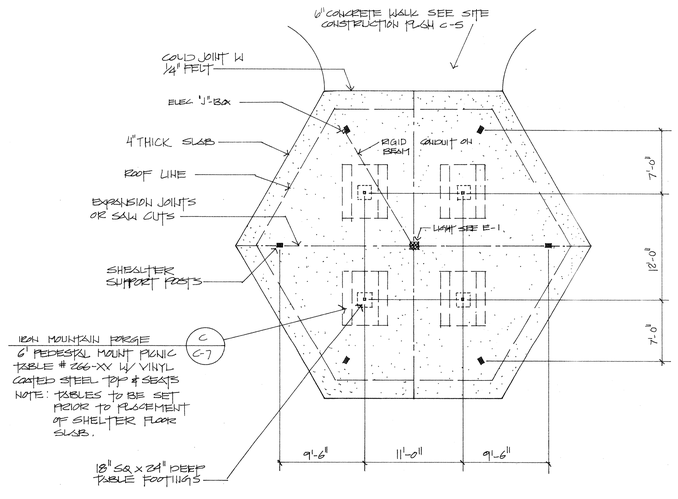

Picnic Shelter Table Layout

Scale 1/8" = 1'-0" (F)

NOTE: DETAILS A, B, C, E & F OF THIS SHEET ARE FOR CONSTRUCTION OF THE PICNIC SHELTER AND ARE TO BE BID AS PART OF ALTERNATE BID "A".

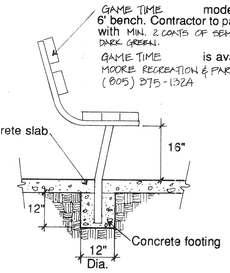

6' Bench

N.T.S. (H)

NOTE: ORDER ALL SITE FURNISHINGS AND LIGHT POLES TO PROVIDE FOR ARRIVAL AND INSTALLATION BEFORE THE CONCRETE FLATWORK IS POURED.

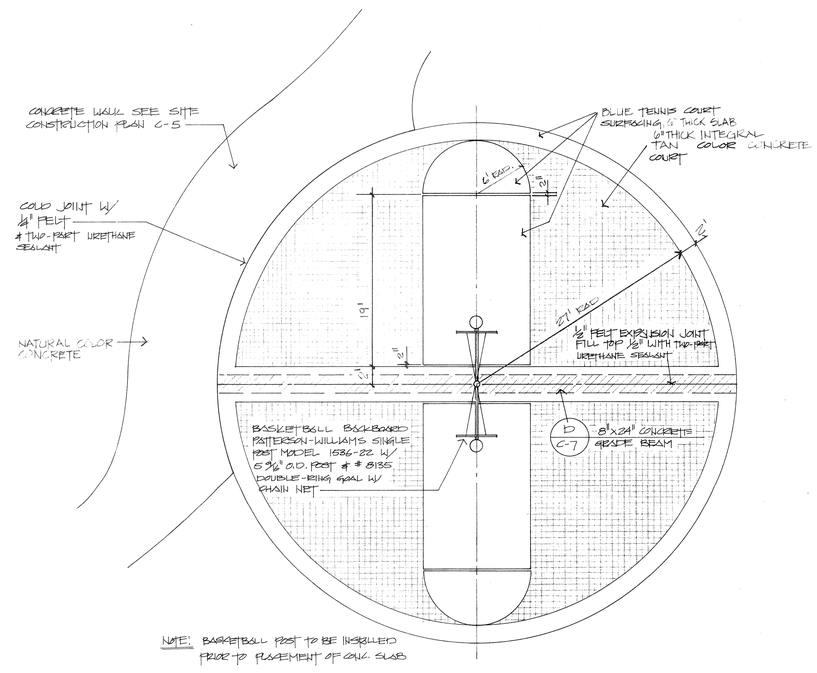

NOTE: BASKETBALL POST TO BE INSTALLED PRIOR TO PLACEMENT OF CONC. SLAB

Basketball Slab Layout

Scale 1/8" = 1'-0" (G)

LANDSCAPE ARCHITECTURE AND PLANNING
515 W. COMMONWEALTH, SUITE 205
FULLERTON, CA 92632 (714)773-0973
ASLA
Heimberger Hirsch

Project;

Rutland Park

The City of Riverside
3900 Main Street
Riverside, CA 92522

REGISTERED LANDSCAPE ARCHITECT
CARL O. HEIMBERGER
#1523
Signature
3-22-89
Date
STATE OF CALIFORNIA

Date; MARCH 22, 1989
Design; HEIMBERGER
Job No; 88007

Description;
CONSTRUCTION DETAILS

Sheet 8 OF 22
DWG. # C-7
P-0418

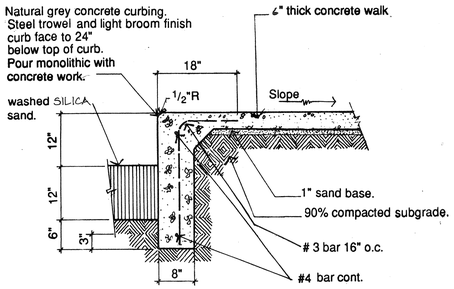

Play Area Curb at Sidewalk (A)

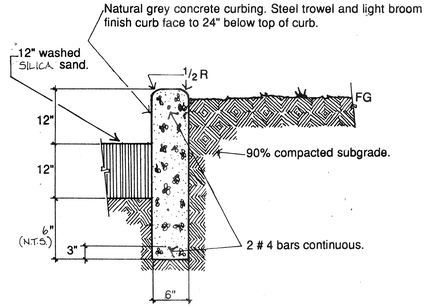

Play Area Curb (B)

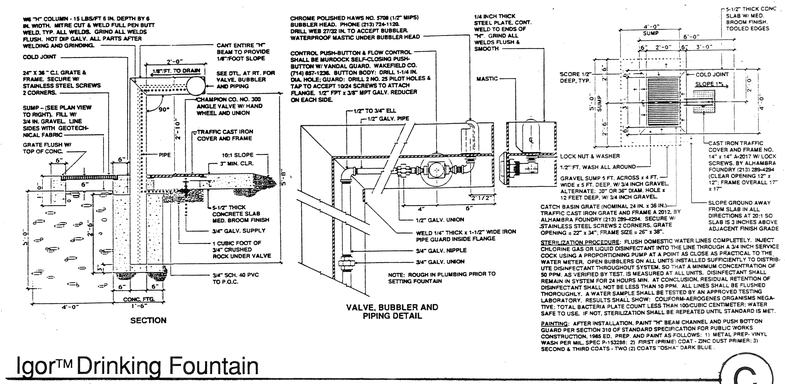

Igor™ Drinking Fountain (C)

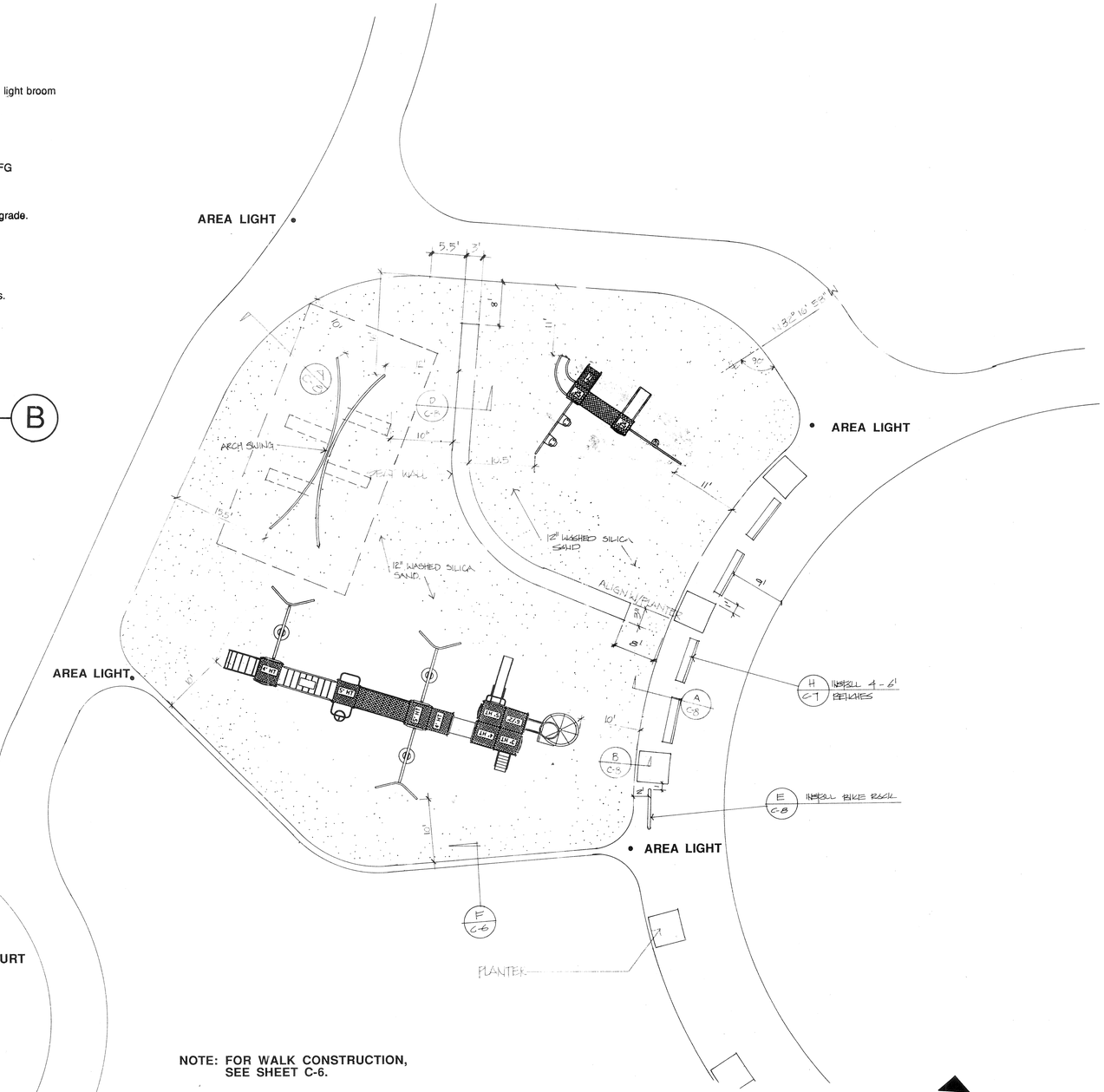

NOTE: FOR WALK CONSTRUCTION, SEE SHEET C-6.

PLAY AREA PLAN

SCALE: 1"=10'-0" (F)

PLAY EQUIPMENT LEGEND

(A) Patterson-Williams Arch Swing - Model #2945-04.

Available from:
The Wakefield Company
Ph. # (714)857-1236

(B) Gametime Play Structure - Model #DE 6831 with modifications.

(C) Gametime Play Structure - Model #DE 6829 with additions.

Items B & C are available from:
Moore Recreation & Park Equipment, Inc.,
Ph.# (800)375-1324 or (800)375-1324

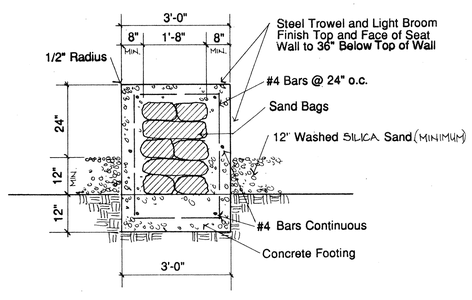

Seat Wall

Scale 1/2" = 1'-0" (D)

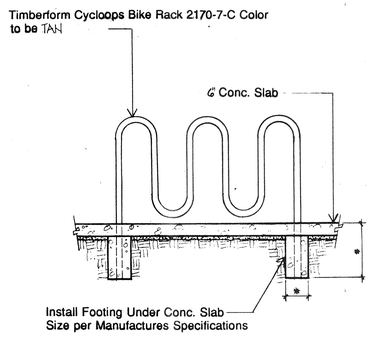

Bicycle Rack

NTS (E)

LANDSCAPE ARCHITECTURE AND PLANNING
515 W. COMMONWEALTH, SUITE 205
FULLERTON, CA 92632 (714)773-0973
ASLA
Heimberger Hirsch

Project;

Rutland Park

The City of Riverside
3900 Main Street
Riverside, CA 92522

REGISTERED LANDSCAPE ARCHITECT
CARL D. HEIMBERGER
#1523
Signature
3-20-89
Date
STATE OF CALIFORNIA

Date; MARCH 20, 1989
Design; HEIMBERGER
Job No; 88007

Description;
PLAY AREA EQUIPMENT PLAN & DETAILS

Sheet 9 OF 22
DWG. # C-8
P-0418

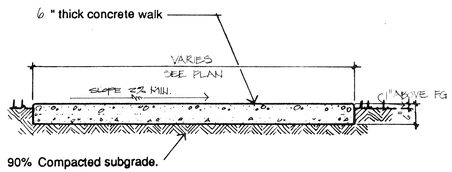

Walk (A)

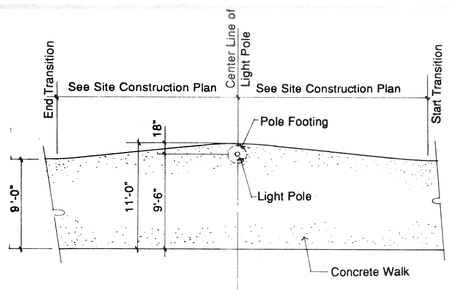

Light Pole in Concrete Walk (B)

Scale: 1/8" = 1'-0"

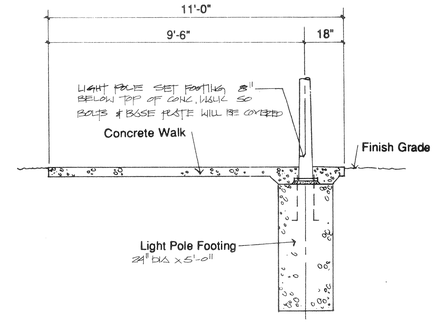

Light Pole in Concrete Walk (C)

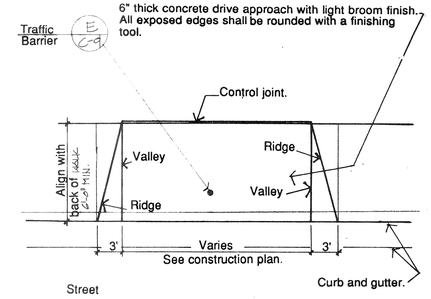

Drive Approach (D)

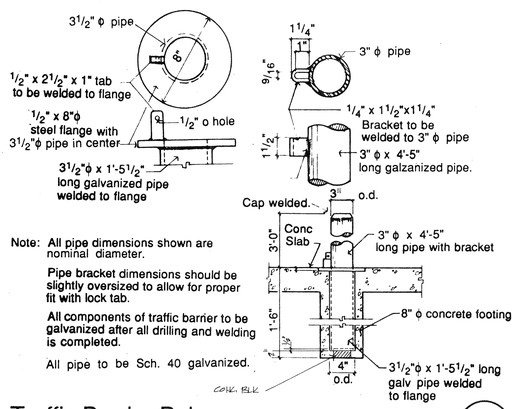

Note: All pipe dimensions shown are nominal diameter.

Pipe bracket dimensions should be slightly oversized to allow for proper fit with lock tab.

All components of traffic barrier to be galvanized after all drilling and welding is completed.

All pipe to be Sch. 40 galvanized.

Traffic Barrier Pole (E)

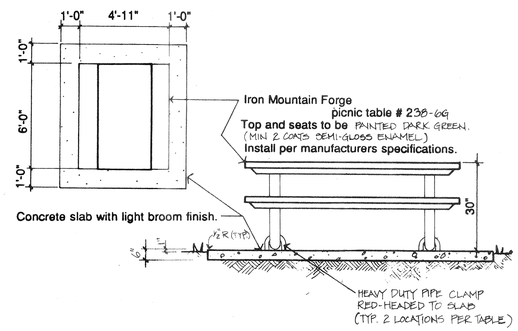

Picnic Tables (Field spot as directed by inspector) (F)

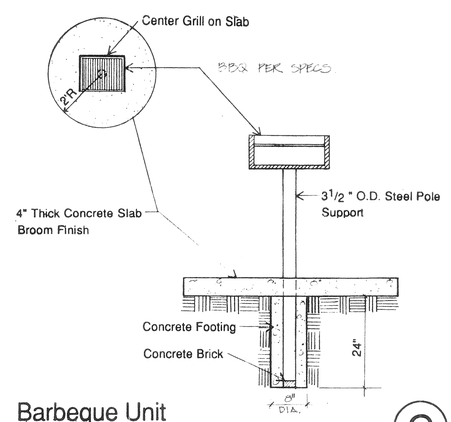

Barbeque Unit (G)

SCALE: 3/4"=1'-0"

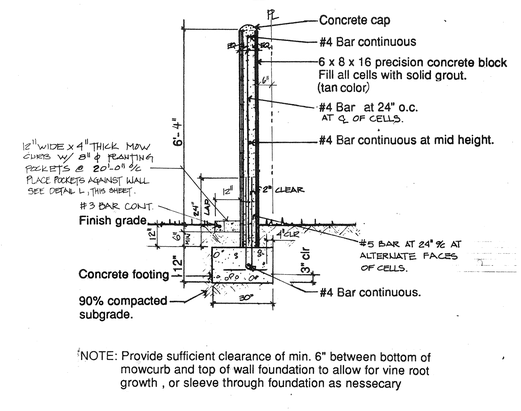

NOTE: Provide sufficient clearance of min. 6" between bottom of mowcurb and top of wall foundation to allow for vine root growth , or sleeve through foundation as nessecary

Property Line Walls TYPE "A" & "D" (H)

NOTE: ADD. ALT. BID ITEM "B" SIMILAR.

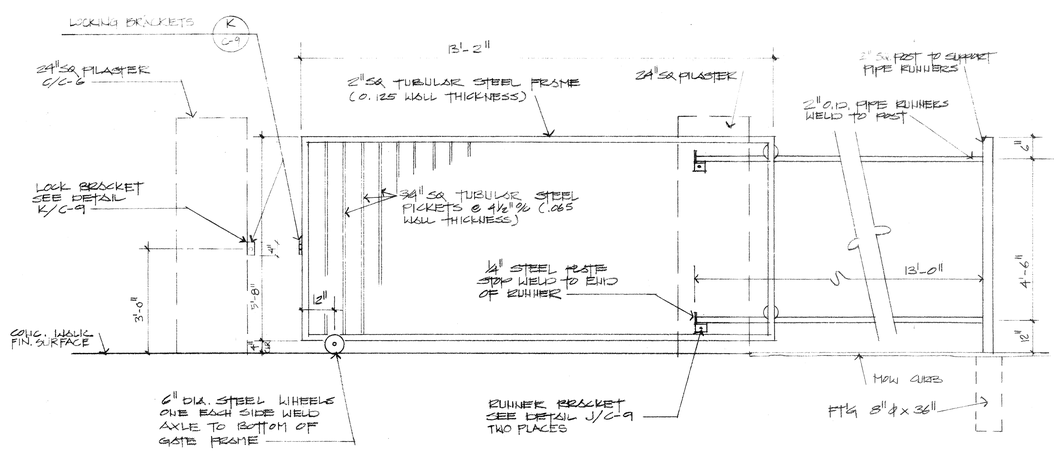

ROLL BACK GATE SC: 1/2"=1'-0" (I)

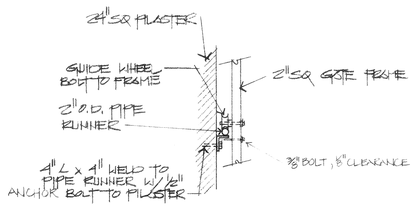

RUNNER SUPPORT SC: 1/2"=1'-0" (J)

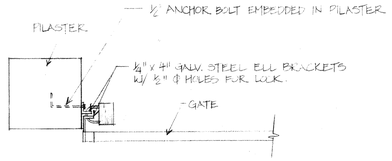

LOCKING BRACKET SC: 1/2"=1'-0" (K)

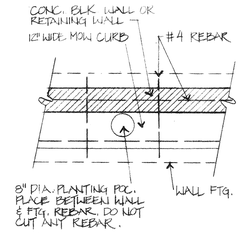

VINE POCKET SC: 1/2"=1'-0" (L)

LANDSCAPE ARCHITECTURE AND PLANNING
515 W. COMMONWEALTH, SUITE 205
FULLERTON, CA 92632 (714)773-0973
ASLA
Heimberger Hirsch

Project;

Rutland Park

The City of Riverside
3900 Main Street
Riverside, CA 92522

REGISTERED LANDSCAPE ARCHITECT
CARL D. HEIMBERGER
1573
Signature
3-20-89
Date
STATE OF CALIFORNIA

Date; MARCH 23, 1989
Design; HEIMBERGER
Job No; 88007

Description;
CONSTRUCTION DETAILS

Sheet 10 OF 22
DWG. # C-9
P-0418

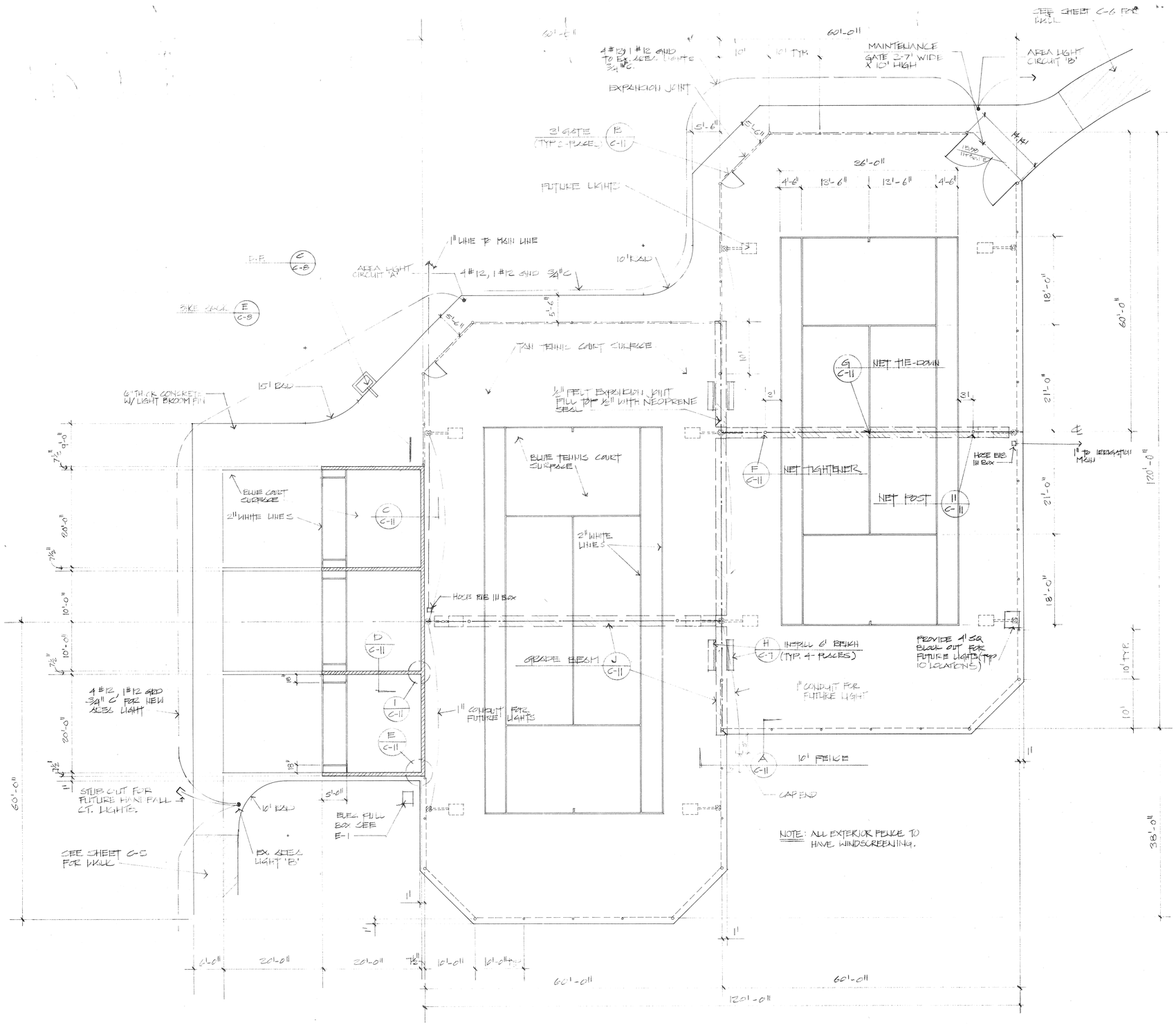

Tennis Court/Handball Layout Plan (ADD. ALT. BID 'A')

Scale 1" =10'-0"

NORTH

LANDSCAPE ARCHITECTURE AND PLANNING
515 W. COMMONWEALTH, SUITE 205
FULLERTON, CA 92632 (714)773-0973
ASLA
Heimberger Hirsch

Project;

Rutland Park

The City of Riverside
3900 Main Street
Riverside, CA 92522

REGISTERED LANDSCAPE ARCHITECT
CARL O. HEIMBERGER
#1523
Signature
3-20-89
Date
STATE OF CALIFORNIA

Date; MARCH 20, 1989
Design; HEIMBERGER
Job No; 88007

Description;
TENNIS COURT/HANDBALL COURT CONSTRUCTION PLAN
ALT BID 'A'

Sheet 11 OF 22
DWG. # C-10
P-0418

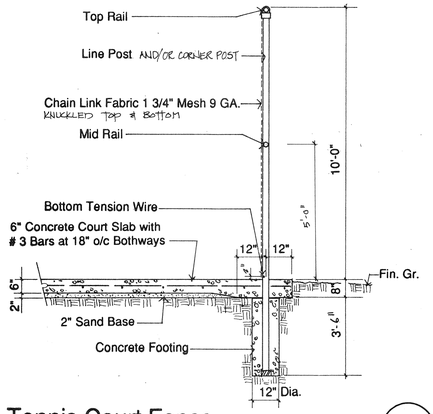

Tennis Court Fence

Scale: 3/8" = 1'-0" (A)

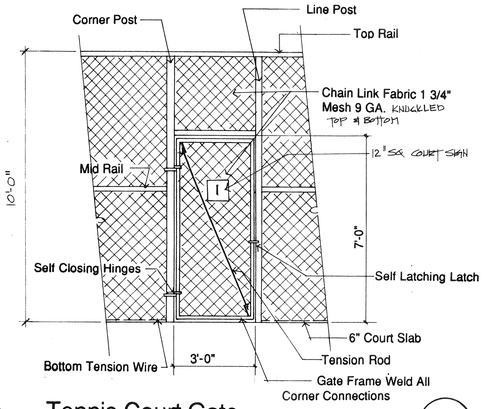

Tennis Court Gate

Scale: 3/8" = 1'-0" (B)

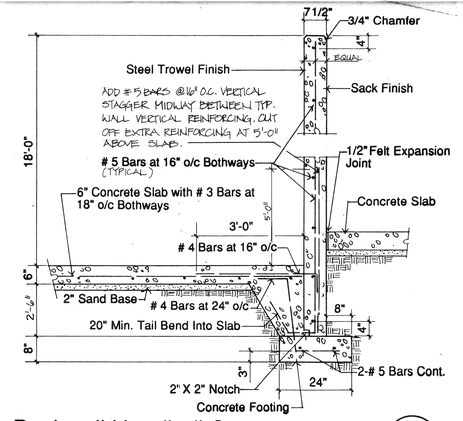

Backwall Handball Courts

Scale: 1/2" = 1'-0" (C)

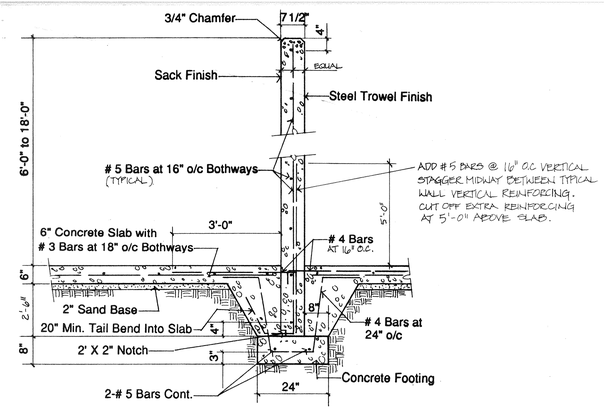

Center Wall Handball Courts

Scale: 1/2" = 1'-0" (D)

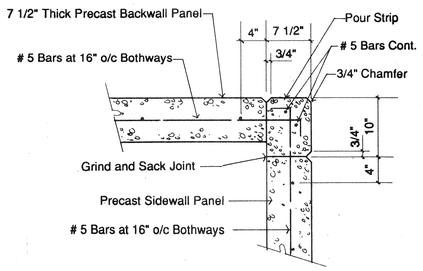

Corner Joint

HANDBALL COURT WALLS

Scale: 1" = 1'-0" (E)

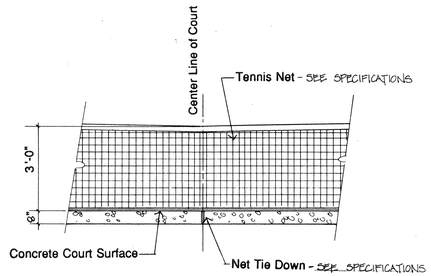

Net Tie-Down

Scale: 3/8" = 1'-0" (G)

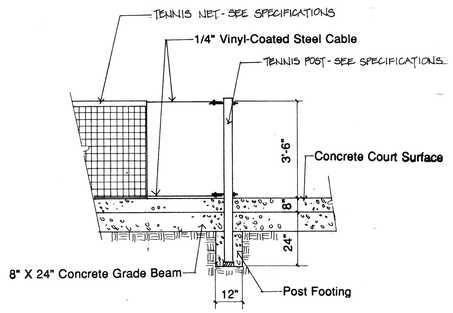

Net Post (Typical)

Scale: 3/8" = 1'-0" (H)

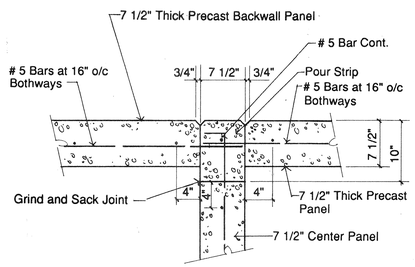

Center Joint

HANDBALL COURT WALLS

Scale: 1" = 1'-0" (I)

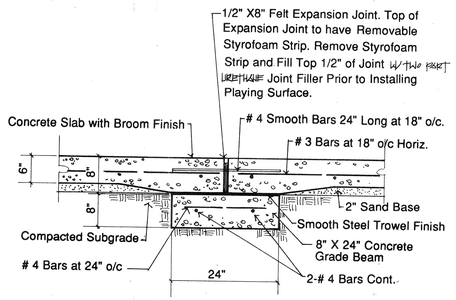

Grade Beam/Expansion Joint

Scale: 3/4"= 1'-0" (J)

LANDSCAPE ARCHITECTURE AND PLANNING
515 W. COMMONWEALTH, SUITE 205
FULLERTON, CA 92632 (714)773-0973
ASLA
Heimberger Hirsch

Project;

Rutland Park

The City of Riverside
3900 Main Street
Riverside, CA 92522

REGISTERED LANDSCAPE ARCHITECT
DAN O. HEIMBERGER
#1523
Signature
3-20-89
Date
STATE OF CALIFORNIA

Date; MARCH 20, 1989
Design; HEIMBERGER
Job No; 88007

Description;
TENNIS COURT & HANDBALL COURT CONSTRUCTION DETAILS ALT BID "A"

Sheet 12 OF 22
DWG. # C-11
P-0418

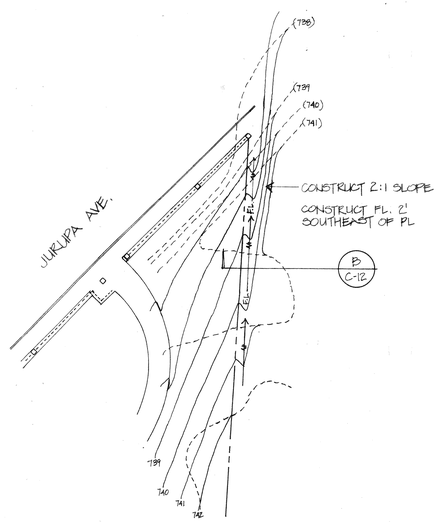

BASE BID GRADING FOR N/E CORNER OF PARK SITE

Scale 1"=30'-0"

A

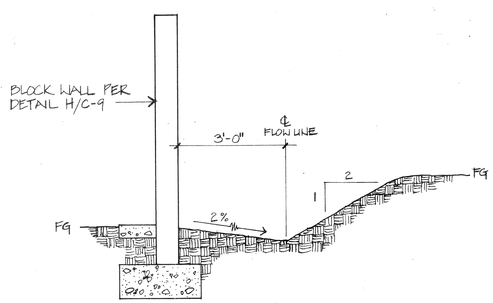

ADD/ALT BID 'B' CONCRETE BLOCK WALL

N.T.S.

B

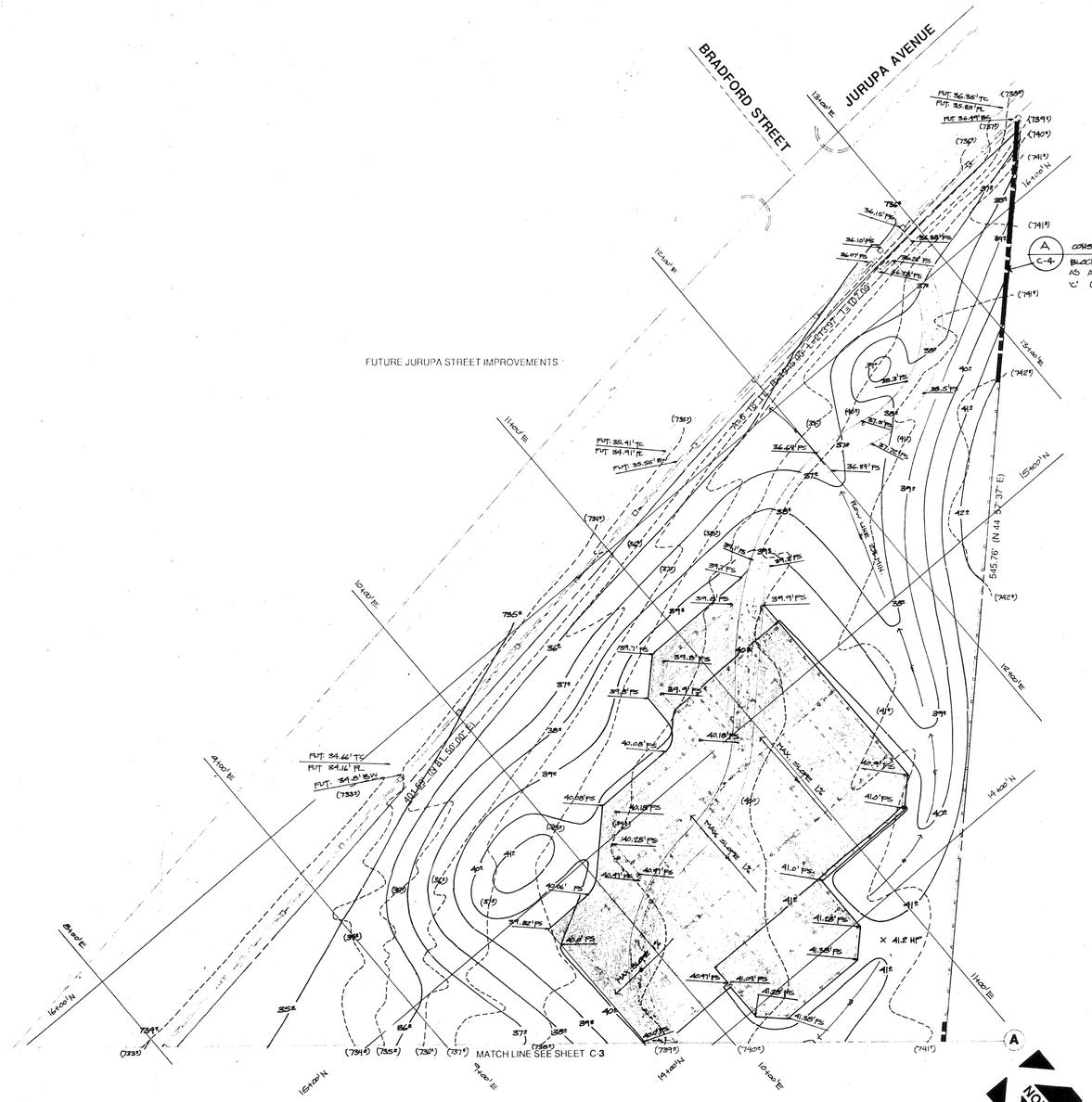

SITE GRADING PLAN FOR TENNIS COURT CONSTRUCTION

SCALE: 1"= 30'-0"

(ADD. ALT. BID A)

LANDSCAPE ARCHITECTURE AND PLANNING

515 W. COMMONWEALTH, SUITE 205
FULLERTON, CA 92632 (714) 773-0973

ASLA

Heimberger Hirsch

Project;

Rutland Park

The City of Riverside
3900 Main Street
Riverside, CA 92522

REGISTERED LANDSCAPE ARCHITECT
CARL O. HEIMBERGER
#1523
Signature
3-20-89
Date
STATE OF CALIFORNIA

Date; MARCH 23, 1989
Design; HEIMBERGER
Job No; 88007

Description;
ALT BID A GRADING PLAN FOR TENNIS COURT CONSTRUCTION
10/18/89
ADDENDUM NO. ONE

Sheet 13 OF 22
DWG. # C-12
P-0418

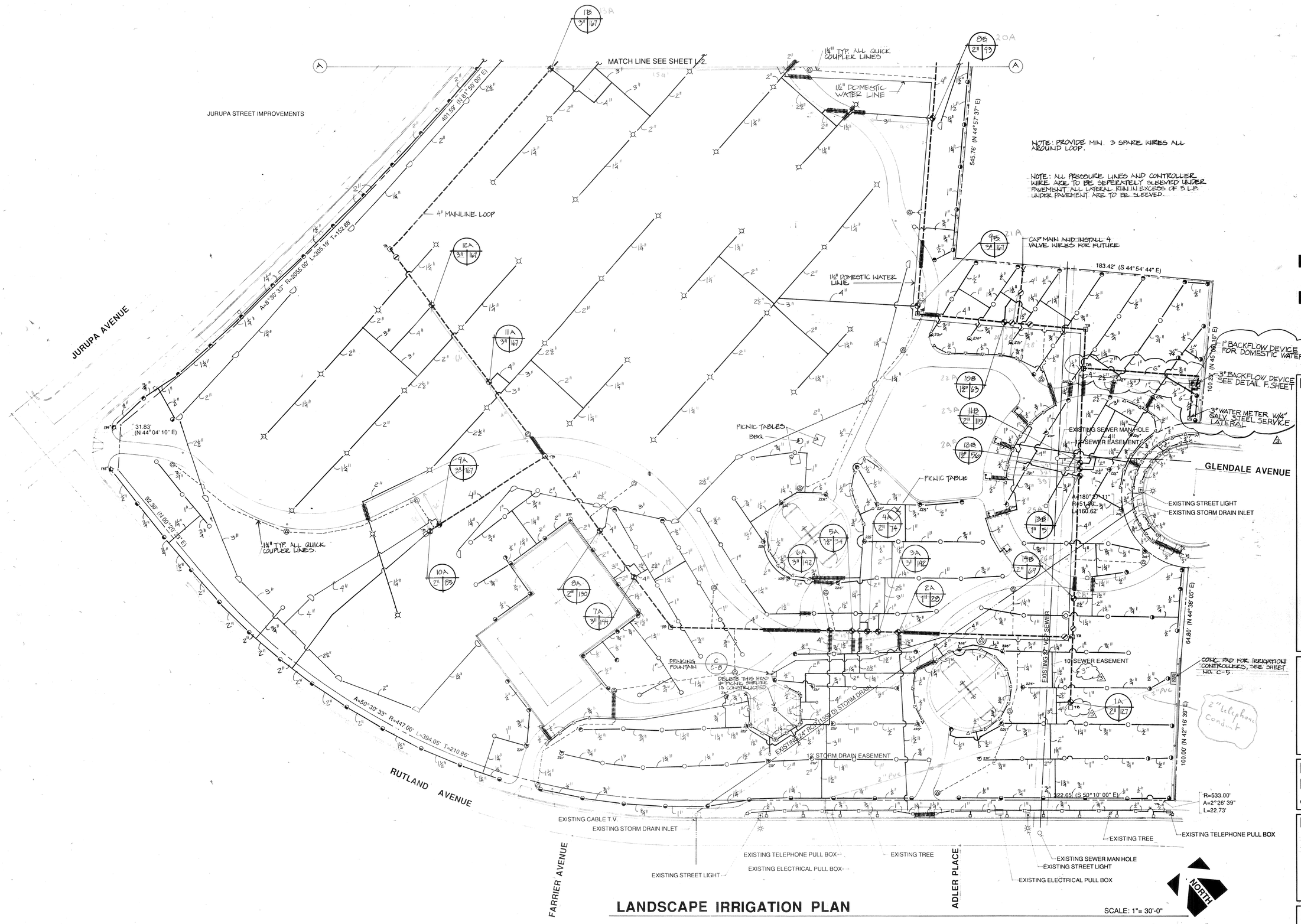

LANDSCAPE IRRIGATION PLAN

SCALE: 1"= 30'-0"

LANDSCAPE ARCHITECTURE AND PLANNING
515 W. COMMONWEALTH, SUITE 205
FULLERTON, CA 92632 (714) 773-0973
ASLA
Heimberger Hirsch

Project;

Rutland Park

The City of Riverside
3900 Main Street
Riverside, CA 92522

REGISTERED LANDSCAPE ARCHITECT
CARL O. HEIMBERGER
#1523
Signature
3-20-89
Date
STATE OF CALIFORNIA

Date; MARCH 23, 1989
Design; HEIMBERGER
Job No; 88007

Description;
IRRIGATION PLAN
3 NEW WATER METER LOCATION 12/13-89

Sheet 14 OF 22
DWG. # L-1
P-0418

IRRIGATION LEGEND

Symbol	Manufacturer /Model No.	Type	Pattern	Radius	GPM	/	PSI	DETAIL
	Toro 642-02-44	Stream	Half	60'	18.6	@	50	D, Sheet L-5
	Toro 644-02-44	Stream	Full	60'	18.6	@	50	D
	Toro 316-00-03	Stream	Full	30'	6.45	@	50	A
	Toro 308-00-03	Stream	Half	30'	3.23	@	50	A
	Toro 304-00-03	Stream	Qtr.	30'	1.61	@	50	A
270°	Toro 312-00-03	Stream	270°	30'	4.84	@	50	A
225°	Toro 310-00-03	Stream	225°	30'	4.03	@	50	A
202.5°	Toro 309-00-03	Stream	202.5°	30'	3.63	@	50	A
135°	Toro 306-00-03	Stream	135°	30'	2.42	@	50	A
	Rainbird 1804 SAM-12F	Lawn	Full	12'	2.60	@	30	A
	Rainbird 1804 SAM-12H	Lawn	Half	12'	1.30	@	30	A
	Rainbird 1804 SAM-12Q	Lawn	Qtr.	12'	0.65	@	30	A
	Rainbird 1804 SAM-B15 SST	Side Strip	6' X 26'	N/A	1.29	@	30	A
	Rainbird 1804 SAM-B15 EST	End Strip	6' X 13'	N/A	0.65	@	30	A
	Toro 570C-4P SB-90-PC	Stream Bubbler	Qtr.	6'	0.5	@	50	A

Note: All Toro 300 Series stream rotors to be installed with Valcon ADV - check valves

Nibco T-113 Series brass gate valve, line size	E
Griswold # 2000 Series remote control valve, size per plan	C
Griswold model 2440 (24 Station) and 2400 (12 Station) irrigation controllers	G
Rainbird RPA 300-R , 3" reduced pressure backflow device	F
Rainbird RPA 100-R , 1" reduced pressure backflow device (for domestic water)	F
Rainbird # 44 LRC quick coupler valve	B
Concrete thrust block	
Constant pressure main line to be SCH. 40 PVC for lines $1\frac{1}{2}$" and smaller , and Class 200 RING-TITE PVC for lines 2" and larger. All fittings to be SCH. 40 PVC , solvent weld. All valve risers to be SCH. 80 PVC threaded nipples . No manifolding of valves will be allowed.	H
Constant pressure quick coupler line to be $1\frac{1}{4}$" SCH.40 PVC with SCH. 40 PVC fittings	
Intermittent pressure lateral line to be CLASS 200 PVC with SCH. 40 PVC fittings	H
Sleeving to be SCH 40 PVC or ABS	H

Valve number and controller designation
GPM of system
Size of valve

Note: Contractor shall bid the Satellite Assembly as specified on page 9 of the Irrigation Specifications, Section 02441, 2.06 as the irrigation controller. This is to be installed in lieu of the Griswold models 2440 and 2400 irrigation controllers as listed in the Irrigation Legend on Drawing L -2 of the Plans.

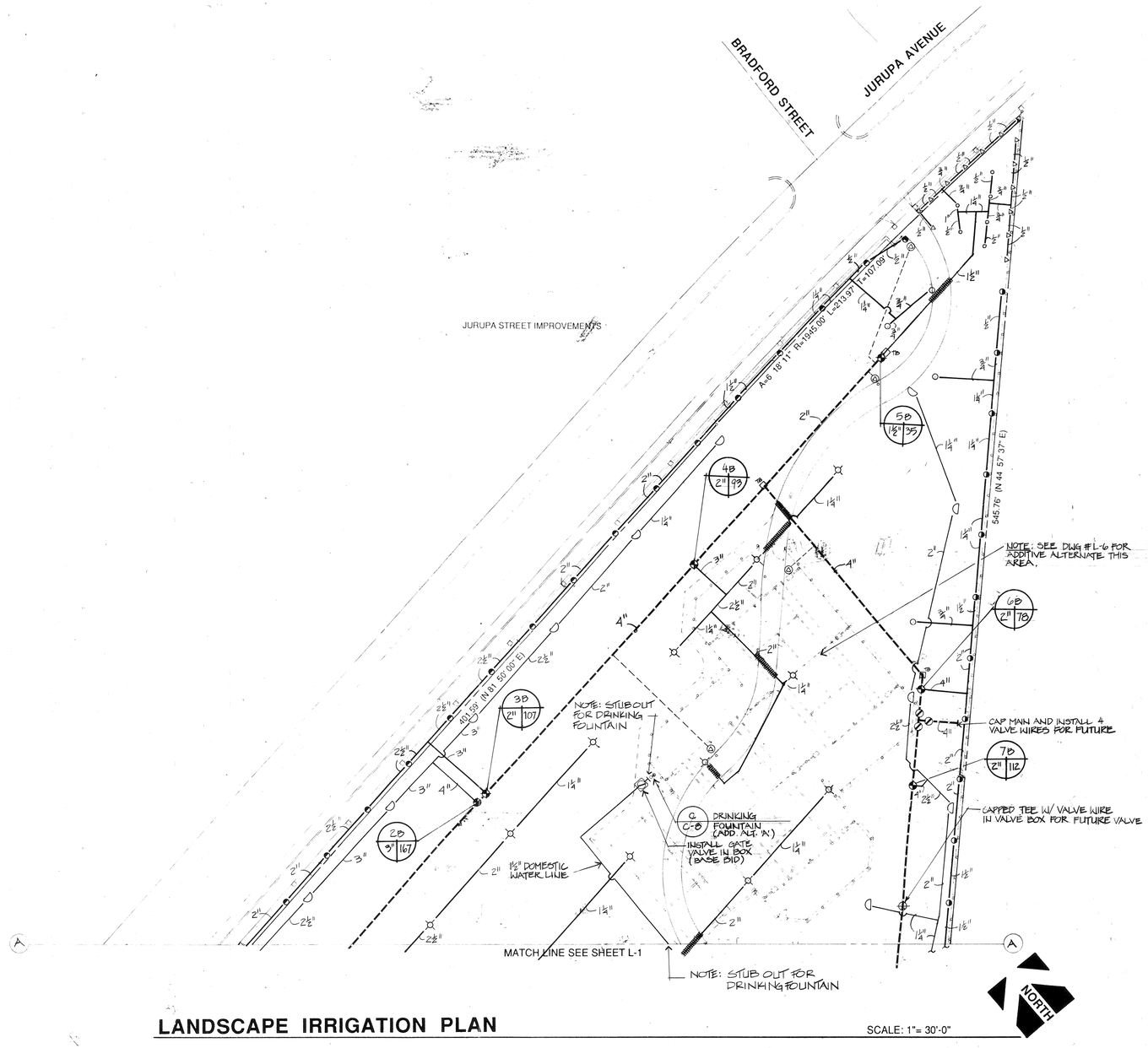

LANDSCAPE IRRIGATION PLAN

SCALE: 1"= 30'-0"

LANDSCAPE ARCHITECTURE AND PLANNING
515 W. COMMONWEALTH, SUITE 205
FULLERTON, CA 92632 (714) 773-0973
ASLA
Heimberger Hirsch

Project;

Rutland Park

The City of Riverside
3900 Main Street
Riverside, CA 92522

REGISTERED LANDSCAPE ARCHITECT
CARL O. HEIMBERGER
#1523
3-26-89
Date
STATE OF CALIFORNIA

Date; MARCH 23, 1989
Design; HEIMBERGER
Job No; 88007

Description;
IRRIGATION PLAN
△ 10/18/89 ADDENDUM NO. TWO

Sheet 15 OF 22
DWG. # L-2
P-0418

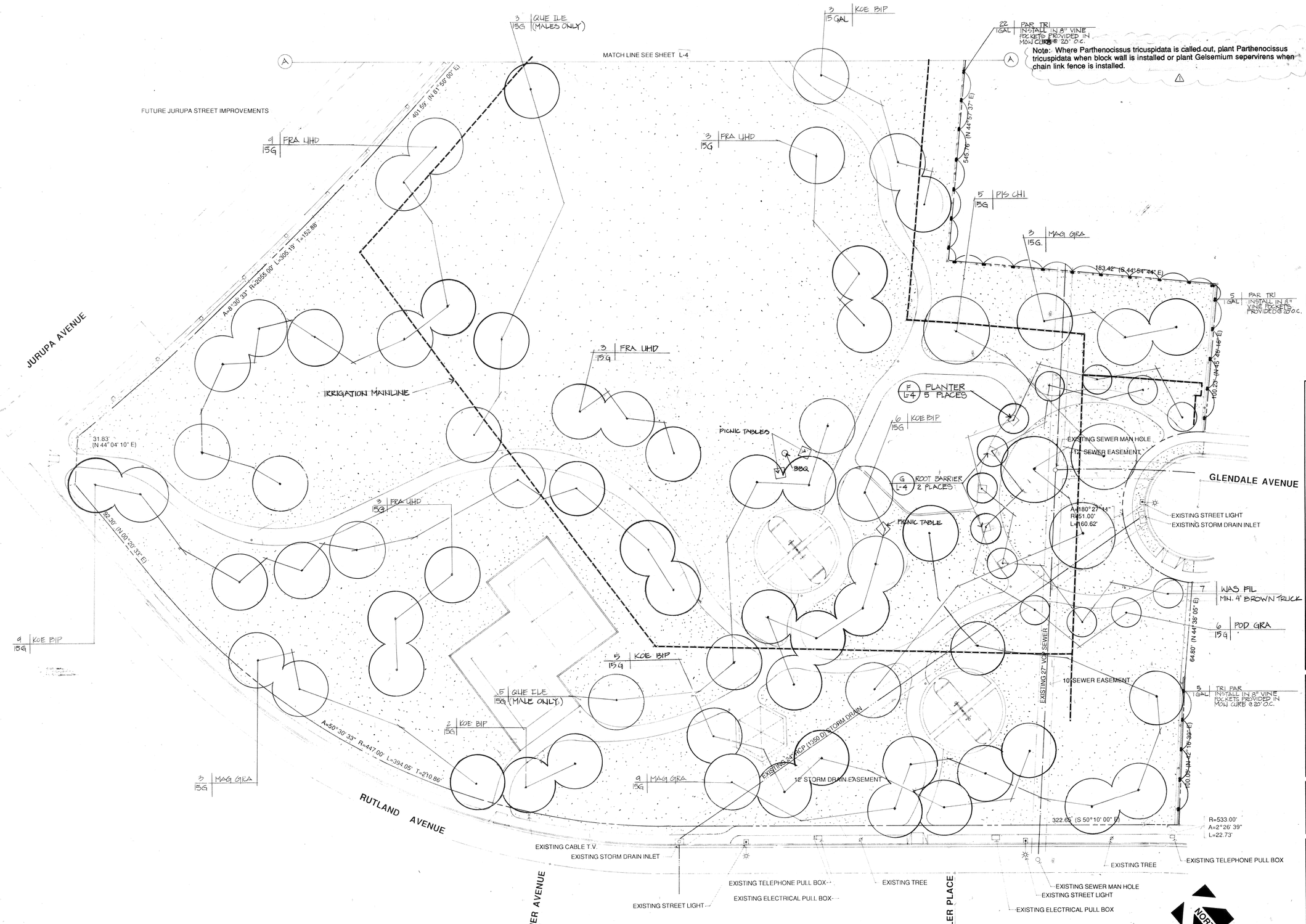

LANDSCAPE PLANTING PLAN

FOR PLANT LEGEND SEE SHEET L-4.

SCALE: 1"= 30'-0"

LANDSCAPE ARCHITECTURE AND PLANNING

515 W. COMMONWEALTH, SUITE 205
FULLERTON, CA 92632 (714) 773-0973

ASLA

Heimberger Hirsch

Project;

Rutland Park

The City of Riverside
3900 Main Street
Riverside, CA 92522

REGISTERED LANDSCAPE ARCHITECT
CARL O. HEIMBERGER
#1523
Signature
3-20-89
Date
STATE OF CALIFORNIA

Date; MARCH 20, 1989
Design; HEIMBERGER
Job No; 88007

Description;
PLANTING PLAN
△ 10/18/89 ADDENDUM NO. ONE

Sheet 16 OF 22
DWG. # L-3
P-0418

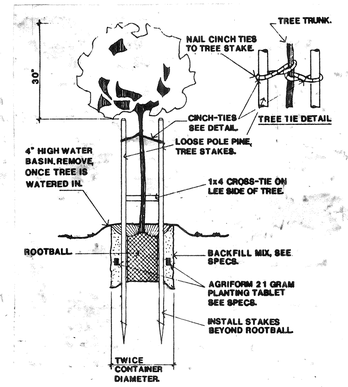

TREE STAKING DOUBLE — A

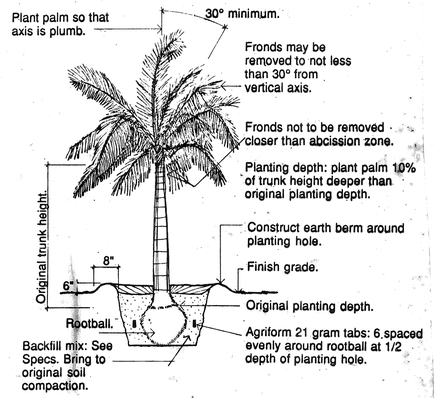

Palm Tree Planting — B

Shrubs — C

Ground Cover — D

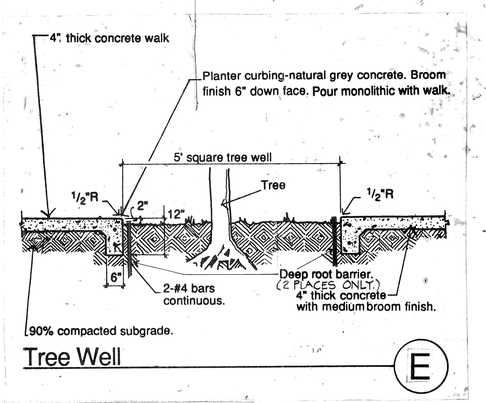

Tree Well — E

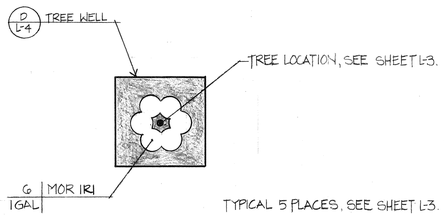

Planter — F

Root Barrier is Available From:
Deep Root Corp. - (714)898-0563

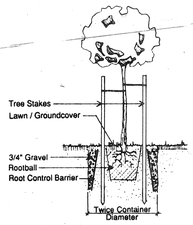

Root Barrier — G

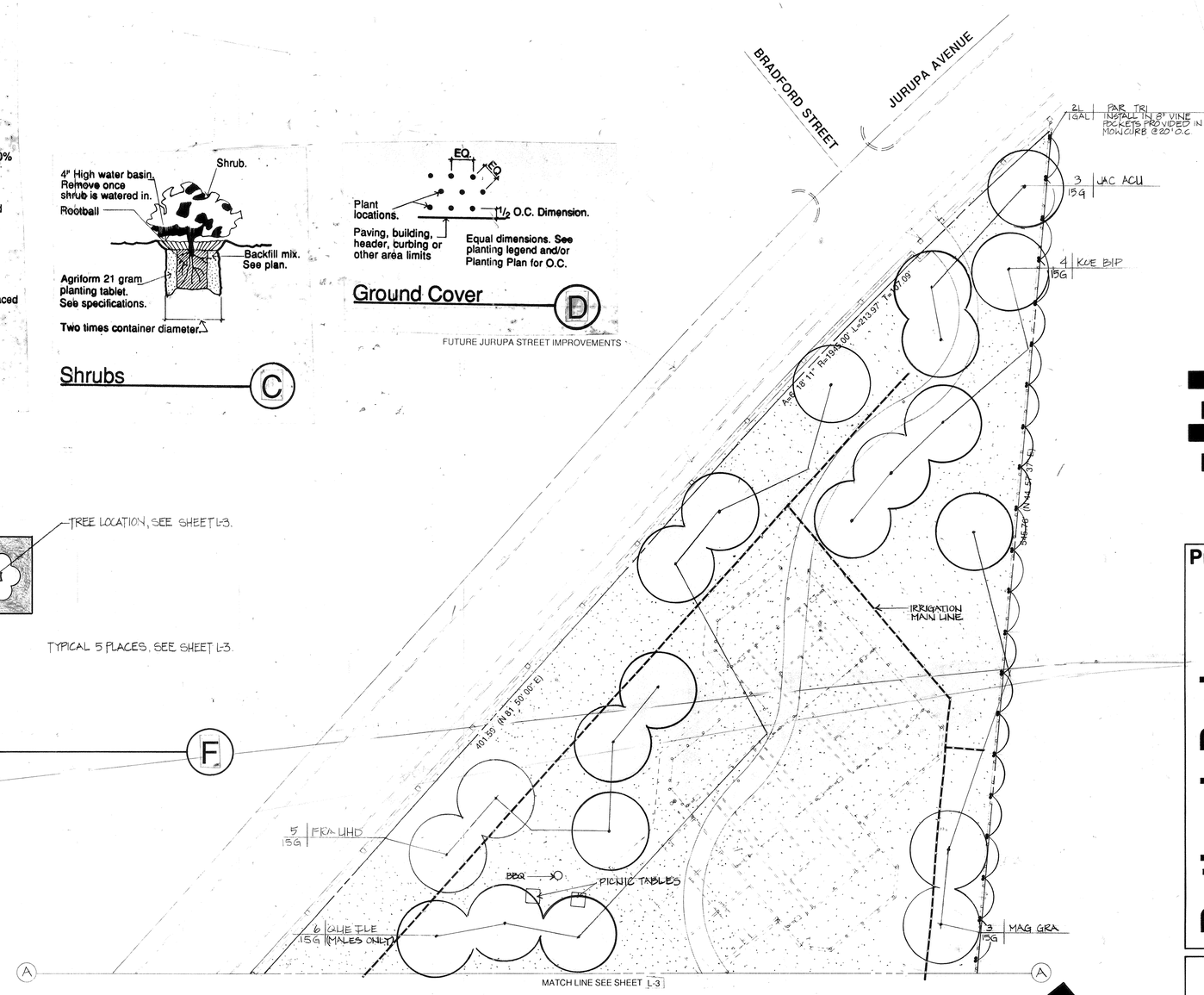

FUTURE JURUPA STREET IMPROVEMENTS

LANDSCAPE PLANTING PLAN

SCALE: 1"= 30'-0"

Planting Legend

SYM	BOTANICAL NAME	COMMON NAME	DETAIL
Trees:			
FRA UHD	Fraxinus uhdei	Evergreen Ash	A
KOE BIP	Koelreuteria bipinnata	Chinese Flame Tree	A
MAG GRA	Magnolia grandiflora	Southern Magnolia	A
PIS CHI	Pistacia chinensis	Chinese Pistache	A
POD GRA	Podocarpus gracilior	Fern Pine	A
QUE ILE	Quercus ilex	Holly Oak	A
WAS FIL	Washingtonia Filifera	California Fan Palm (min. 4' tall after planting)	B
Shrubs:			
MOR IRI	Moraea iridioides	Fortnight Lily	C
PAR TRI	PARTHENOCISSUS TRICUSPIDATA	BOSTON IVY	
Groundcover:			
	Turf Hydroseed	City Std. 5-way mix	
	Hypericum calycinum (from flats @ 12" o.c.)	Aaron's Beard	D

Note: Where Parthenocissus tricuspidata is called out, plant Parthenocissus tricuspidata when block wall is installed or plant Gelsemium sepervirens when chain link fence is installed. ⚠

Planting Notes

1. Verify location and depth of all underground utilities prior to start of work.
2. Remove all weed and grass vegetation from site, follow the recommendations of weed control specification.
3. After irrigation system installation and finish grades have been established. Perform weed control as recommended in specifications.
4. Do not install trees closer than 10' to rotor or impact heads and 3' to stream or spray heads.
5. Park Projects Inspector shall have the opportunity to inspect and approve all specimen and box material at nursery prior to shipment.
6. Park Projects Inspectorshall have the opportunity to inspect and approve all 1 gal. to 15 gal. material at job site prior to planting.
7. Landscape contractor shall be responsible for all thefts or damage to plant material once plant material is delivered to job site.
8. Upon completion of planting, contractor shall arrange for a substantial completion inspection by Park Projects Inspector. Contractor shall correct any discrepancies found prior to final inspection and acceptance of project.
9. Upon final acceptance of work, contractor shall submit to owner signed originals of all material and labor releases.
10. A representative sample of the botanical name tags, furnished by the nursery stock supplier, shall remain attached to the plants until final inspection.
11. Planting of groundcover shall be continuous under all shrubs throughout project site.

LANDSCAPE ARCHITECTURE AND PLANNING
515 W. COMMONWEALTH, SUITE 205
FULLERTON, CA 92632 (714) 773-0973
ASLA
Heimberger Hirsch

Project;

Rutland Park

The City of Riverside
3900 Main Street
Riverside, CA 92522

REGISTERED LANDSCAPE ARCHITECT
CARL O. HEIMBERGER
#1523
Signature
3-20-89
Date
STATE OF CALIFORNIA

Date; MARCH 20, 1989
Design; HEIMBERGER
Job No; 88007

Description;
PLANTING PLAN AND DETAILS
⚠ 10/18/89 ADDENDUM NO. ONE

Sheet 17 OF 22
DWG. # L-4
P-0418

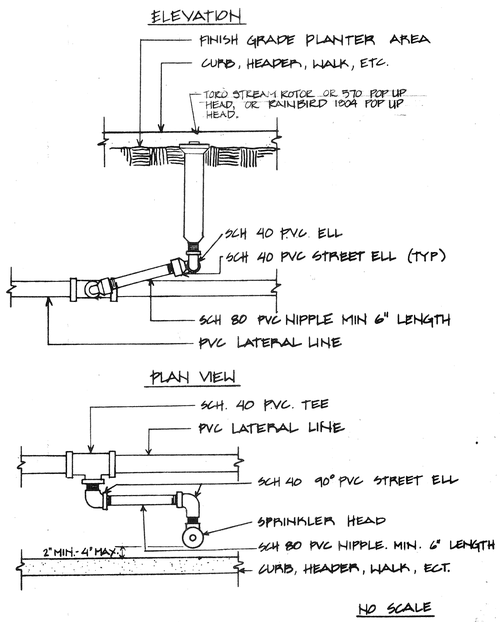

Spray Head (A)

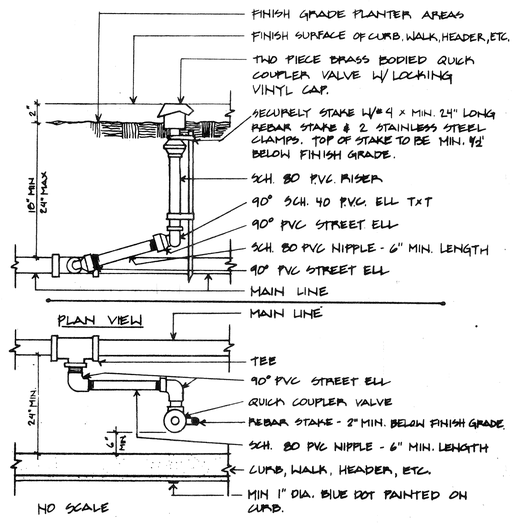

Quick Coupler (B)

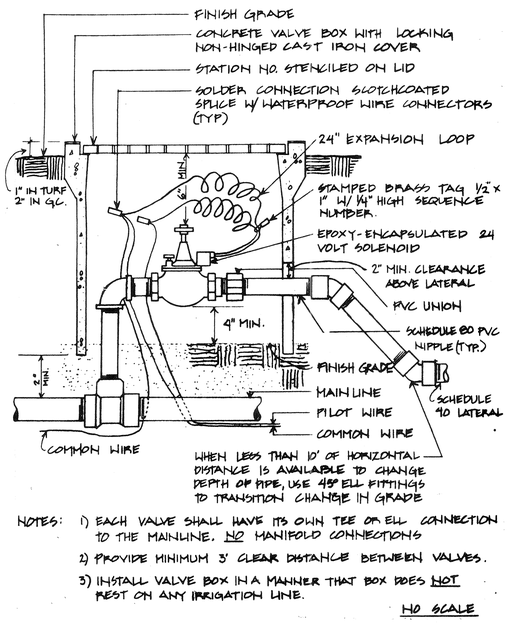

Automatic Valve (C)

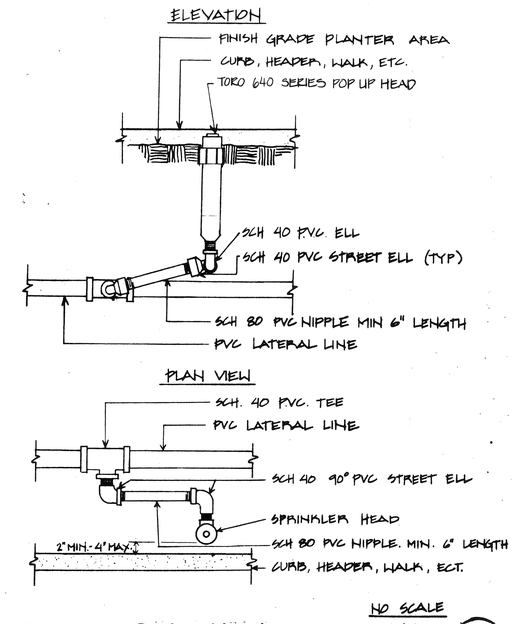

Toro 640 Series Head (D)

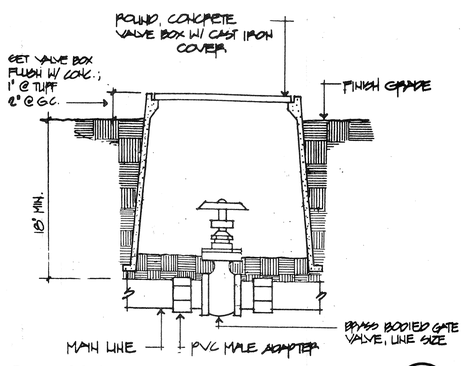

Gate Valve (E)

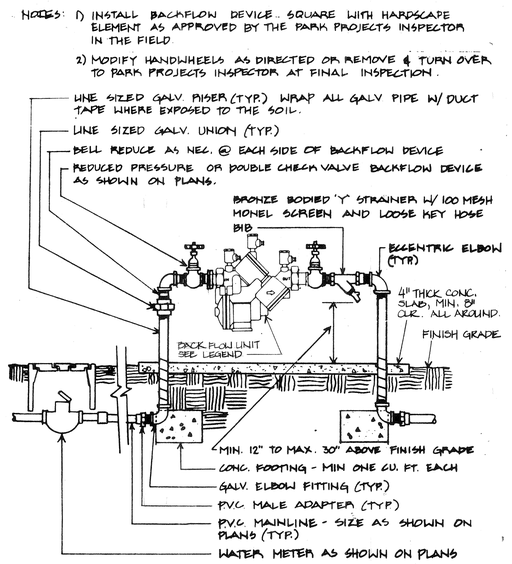

Backflow Device (F)

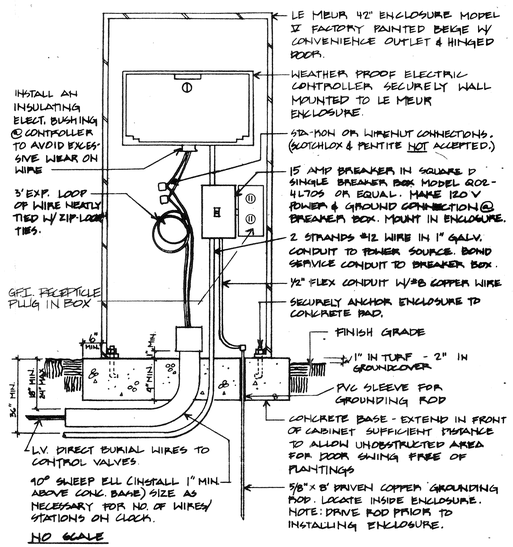

Controller (G)

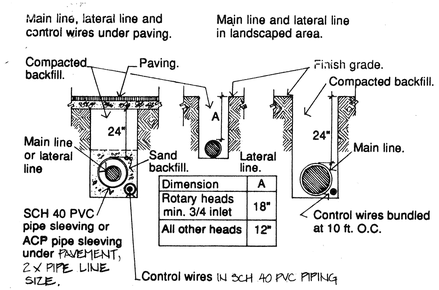

Dimension	A
Rotary heads min. 3/4 inlet	18"
All other heads	12"

Notes:
1. Allow 1½" horizontal and vertical clearance between adjacent lines.
2. Compact trenches to 90% in paving areas and to 80% in all landscaped areas.

Trenching (H)

LANDSCAPE ARCHITECTURE AND PLANNING
515 W. COMMONWEALTH, SUITE 205
FULLERTON, CA 92632 (714)773-0973
ASLA
Heimberger Hirsch

Project;

Rutland Park

The City of Riverside
3900 Main Street
Riverside, CA 92522

REGISTERED LANDSCAPE ARCHITECT
CARL O. HEIMBERGER
#1523
Signature
3-20-89
Date
STATE OF CALIFORNIA

Date; MARCH 20, 1989
Design; HEIMBERGER
Job No; 88007

Description;
IRRIGATION DETAILS

Sheet 18 OF 22
DWG. # L-5
P-0418

IRRIGATION LEGEND

Symbol	Manufacturer	/Model No.	Type	Pattern	Radius	GPM	/	PSI	DETAIL
	Toro	642-02-44	Stream	Half	60'	18.6	@	50	D, Sheet L-5
	Toro	644-02-44	Stream	Full	60'	18.6	@	50	D
270°	Toro	643-02-42	Stream	270°	55'	12.9	@	50	D
238°	Toro	640-02-41	Stream	238°	53'	10.2	@	50	D
	Toro	316-00-03	Stream	Full	30'	6.45	@	50	A
	Toro	308-00-03	Stream	Half	30'	3.23	@	50	A
	Toro	304-00-03	Stream	Qtr.	30'	1.61	@	50	A
270°	Toro	312-00-03	Stream	270°	30'	4.84	@	50	A
225°	Toro	310-00-03	Stream	225°	30'	4.03	@	50	A
202.5°	Toro	309-00-03	Stream	202.5°	30'	3.63	@	50	A
135°	Toro	306-00-03	Stream	135°	30'	2.42	@	50	A
	Rainbird	1804 SAM-12F	Lawn	Full	12'	2.60	@	30	A
	Rainbird	1804 SAM-12H	Lawn	Half	12'	1.30	@	30	A
	Rainbird	1804 SAM-12Q	Lawn	Qtr.	12'	0.65	@	30	A
	Rainbird	1804 SAM-B15 SST	Side Strip	6' X 26'	N/A	1.29	@	30	A
	Rainbird	1804 SAM-B15 EST	End Strip	6' X 13'	N/A	0.65	@	30	A
	Toro	570C-4P SB-90-PC	Stream Bubbler	Qtr.	6'	0.5	@	50	A

Note: All Toro 300 Series stream rotors to be installed with Valcon ADV - check valves

Nibco T-113 Series brass gate valve, line size	E
Griswold # 2000 Series remote control valve, size per plan	C
Griswold model 2440 (24 Station) and 2400 (12 Station) irrigation controllers	G
Rainbird RPA 300-R , 3" reduced pressure backflow device	F
Rainbird RPA 100-R , 1" reduced pressure backflow device (for domestic water)	F
Rainbird # 44 LRC quick coupler valve	B
TB Concrete thrust block	-
Constant pressure main line to be SCH. 40 PVC for lines $1^1/_2$" and smaller , and Class 315 PVC for lines 2" and larger. All fittings to be SCH. 40 PVC , solvent weld. All valve risers to be SCH. 80 PVC threaded nipples . No manifolding of valves will be allowed.	H
Constant pressure quick coupler line to be $1^1/_4$" SCH.40 PVC with SCH. 40 PVC fittings	
Intermittent pressure lateral line to be SCH. 40 PVC with SCH. 40 PVC fittings	H
Sleeving to be SCH 40 PVC or ABS	H

Valve number and controller designation
GPM of system
Size of valve

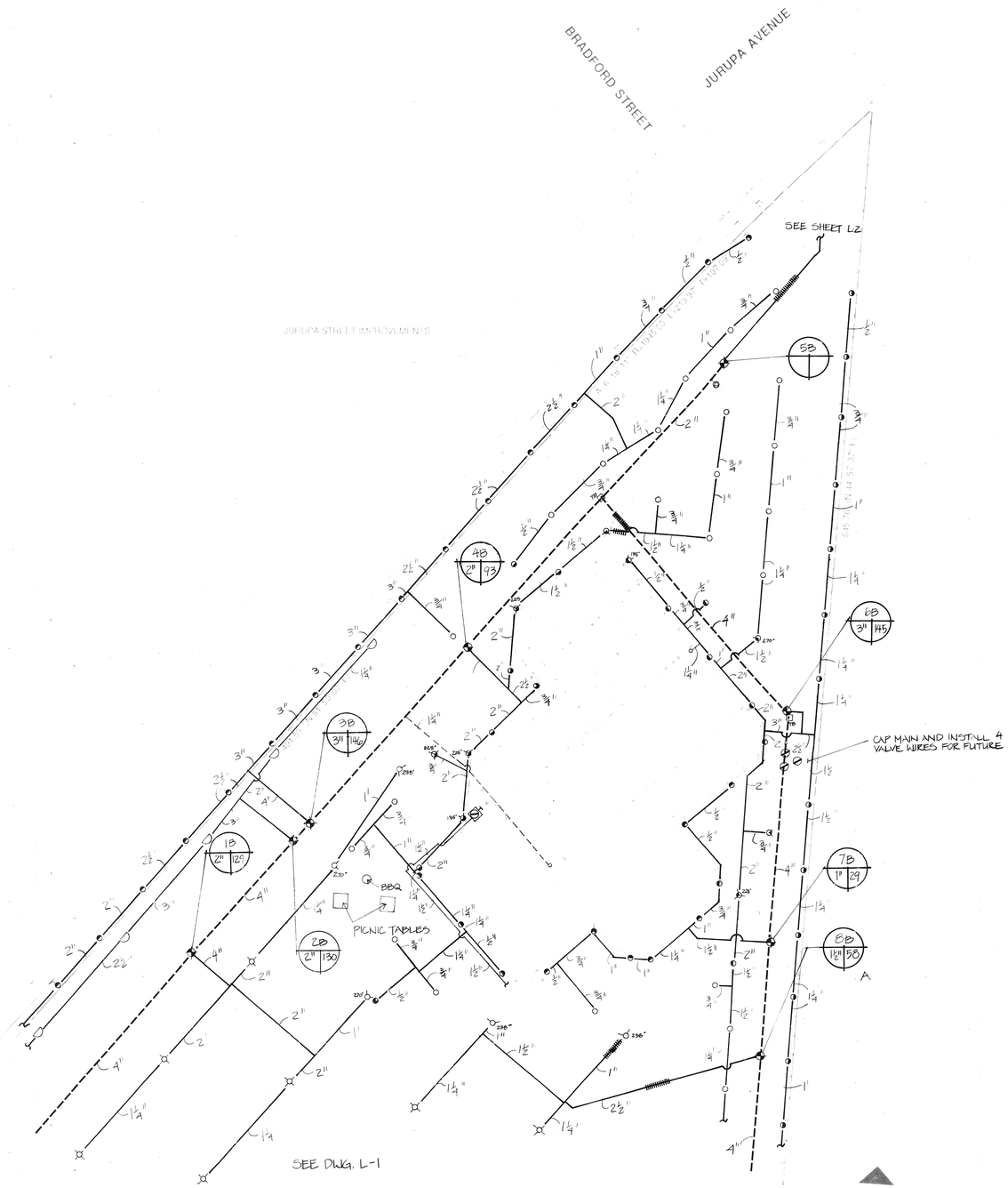

LANDSCAPE IRRIGATION PLAN **(ADD. ALT. BID A)**

SCALE 1"=30'-0"

LANDSCAPE ARCHITECTURE AND PLANNING
515 W. COMMONWEALTH, SUITE 205
FULLERTON, CA 92632 (714) 773-0973
ASLA
Heimberger Hirsch

Project;

Rutland Park

The City of Riverside
3900 Main Street
Riverside, CA 92522

REGISTERED LANDSCAPE ARCHITECT
CARL O. HEIMBERGER
#1523
Signature
3-20-89
Date
STATE OF CALIFORNIA

Date; MARCH 20, 1989
Design; HEIMBERGER
Job No; 88007

Description;
ALT. BID "A" TENNIS COURT/ HANDBALL IRRIGATION

Sheet 19 OF 22
DWG. # L-6
P-0418

KEY NOTES:

1. USE CAUTION WHEN TRENCHING. STORM DRAINS IN AREA.
2. REF ARCHITECTURAL SHEETS FOR EXACT LOCATION OF POLE FOOTINGS.
3. COORD EXACT LOCATION OF SERVICE TRENCH AND TRANSFORMER WITH ELECTRIC UTILITY AND CITY OF RIVERSIDE.
4. PROVIDE ELECTRICAL PULLBOX AND CONDUIT WITH PULLROPE FOR FUTURE TENNIS AND HANDBALL COURTS FOR BASE BID. SEE SHEET C-10 FOR ALT BID
5. PROVIDE 3/4" C.O & TERMINATE IN PULL BOX.
6. PROVIDE P.E. CELLS ON TOP OF ROOF FOR WALK CIRCUITS "A" SOUTH & "B" SOUTH
7. PROVIDE P.E. CELLS ON TOP OF ROOF FOR WALK CIRCUITS "A" NORTH & "B" NORTH

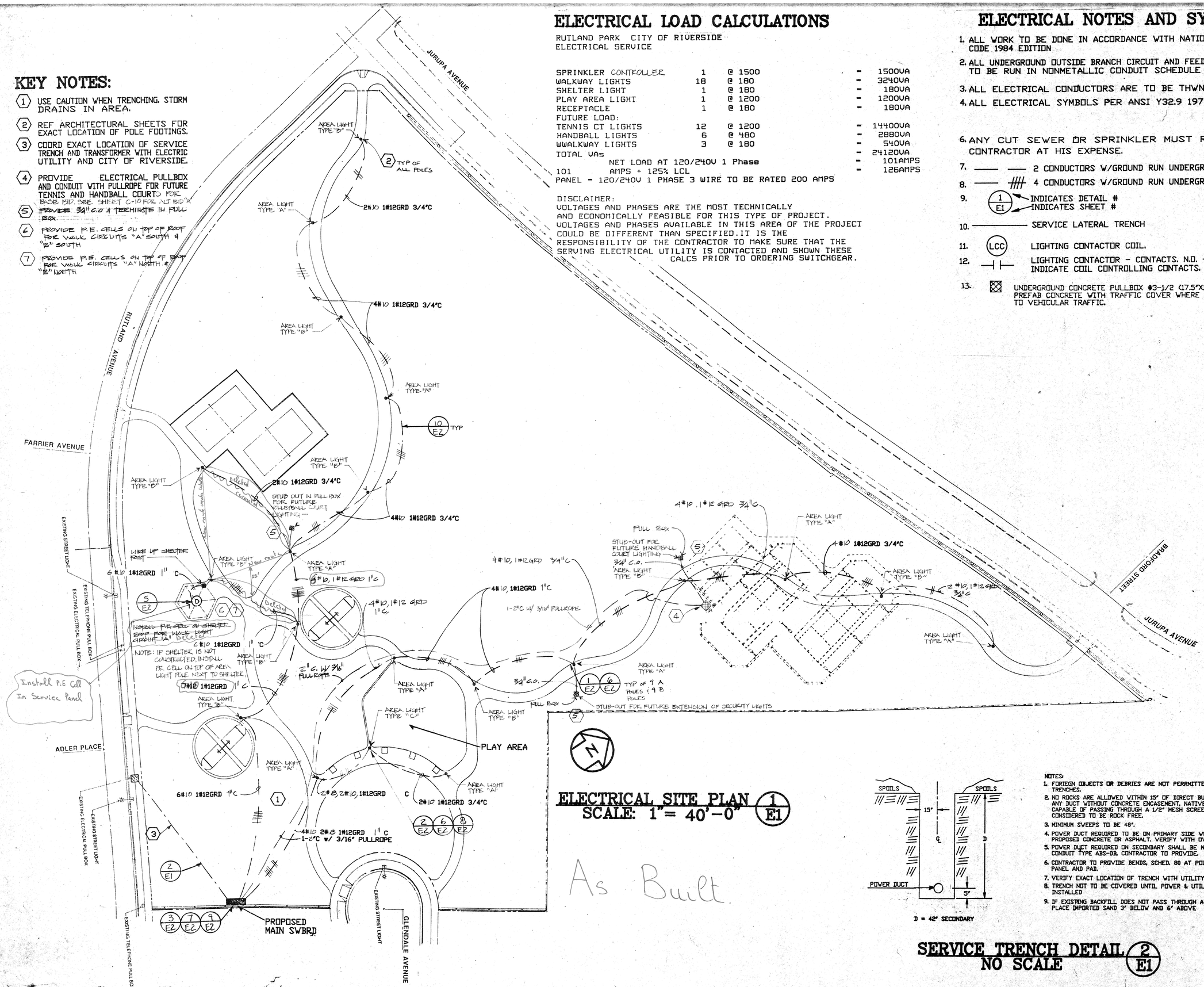

ELECTRICAL SITE PLAN (1/E1)
SCALE: 1" = 40'-0"

As Built

ELECTRICAL LOAD CALCULATIONS

RUTLAND PARK CITY OF RIVERSIDE
ELECTRICAL SERVICE

SPRINKLER CONTROLLER	1	@ 1500	=	1500VA
WALKWAY LIGHTS	18	@ 180	=	3240VA
SHELTER LIGHT	1	@ 180	=	180VA
PLAY AREA LIGHT	1	@ 1200	=	1200VA
RECEPTIACLE	1	@ 180	=	180VA
FUTURE LOAD:				
TENNIS CT LIGHTS	12	@ 1200	=	14400VA
HANDBALL LIGHTS	6	@ 480	=	2880VA
WWALKWAY LIGHTS	3	@ 180	=	540VA
TOTAL VAs			=	24120VA
NET LOAD AT 120/240V 1 Phase			=	101AMPS
101 AMPS + 125% LCL			=	126AMPS

PANEL - 120/240V 1 PHASE 3 WIRE TO BE RATED 200 AMPS

DISCLAIMER:
VOLTAGES AND PHASES ARE THE MOST TECHNICALLY AND ECONOMICALLY FEASIBLE FOR THIS TYPE OF PROJECT. VOLTAGES AND PHASES AVAILABLE IN THIS AREA OF THE PROJECT COULD BE DIFFERENT THAN SPECIFIED. IT IS THE RESPONSIBILITY OF THE CONTRACTOR TO MAKE SURE THAT THE SERVING ELECTRICAL UTILITY IS CONTACTED AND SHOWN THESE CALCS PRIOR TO ORDERING SWITCHGEAR.

ELECTRICAL NOTES AND SYMBOLS

1. ALL WORK TO BE DONE IN ACCORDANCE WITH NATIONAL ELECTRICAL CODE 1984 EDITION
2. ALL UNDERGROUND OUTSIDE BRANCH CIRCUIT AND FEEDER CIRCUITS ARE TO BE RUN IN NONMETALLIC CONDUIT SCHEDULE 40.
3. ALL ELECTRICAL CONDUCTORS ARE TO BE THWN COPPER.
4. ALL ELECTRICAL SYMBOLS PER ANSI Y32.9 1972.
6. ANY CUT SEWER OR SPRINKLER MUST REPLACED BY CONTRACTOR AT HIS EXPENSE.
7. —— —— 2 CONDUCTORS W/GROUND RUN UNDERGROUND.
8. —— /// 4 CONDUCTORS W/GROUND RUN UNDERGROUND, ETC.
9. (1/E1) INDICATES DETAIL # / INDICATES SHEET #
10. ———— SERVICE LATERAL TRENCH
11. (LCC) LIGHTING CONTACTOR COIL.
12. —|— LIGHTING CONTACTOR - CONTACTS. N.O. - LETTERS INDICATE COIL CONTROLLING CONTACTS.
13. ⊠ UNDERGROUND CONCRETE PULLBOX #3-1/2 (17.5"X12.5"X12.5" PREFAB CONCRETE WITH TRAFFIC COVER WHERE SUBJECT TO VEHICULAR TRAFFIC.

NOTES:
1. FORIEGN OBJECTS OR DEBRIES ARE NOT PERMITTED IN COMPLETED TRENCHES.
2. NO ROCKS ARE ALLOWED WITHIN 15" OF DIRECT BURIAL CABLES OR ANY DUCT WITHOUT CONCRETE ENCASEMENT, NATIVE BACKFILL CAPABLE OF PASSING THROUGH A 1/2" MESH SCREEN SHALL BE CONSIDERED TO BE ROCK FREE.
3. MINIMUM SWEEPS TO BE 48".
4. POWER DUCT REQUIRED TO BE ON PRIMARY SIDE WHEN RUN UNDER PROPOSED CONCRETE OR ASPHALT. VERIFY WITH OWNER.
5. POWER DUCT REQUIRED ON SECONDARY SHALL BE NON-METALLIC 4" CONDUIT TYPE ABS-DB, CONTRACTOR TO PROVIDE.
6. CONTRACTOR TO PROVIDE BENDS, SCHED. 80 AT POLE, SCHED. 40 AT PANEL AND PAD.
7. VERIFY EXACT LOCATION OF TRENCH WITH UTILITY COMPANY.
8. TRENCH NOT TO BE COVERED UNTIL POWER & UTILITY WIRES ARE INSTALLED
9. IF EXISTING BACKFILL DOES NOT PASS THROUGH A 1/2" SCREEN PLACE IMPORTED SAND 3" BELOW AND 6" ABOVE CABLES.

SERVICE TRENCH DETAIL (2/E1)
NO SCALE

LANDSCAPE ARCHITECTURE AND PLANNING
515 W. COMMONWEALTH, SUITE 205
FULLERTON, CA 92632 (714)773
ASLA
Heimberger Hirsch

Project;
RUTLAND PARK
CITY OF RIVERSIDE
RUTLAND AVE
RIVERSIDE CALIFORNIA

REGISTERED PROFESSIONAL ENGINEER
JOSEPH M. NOLAN
NO. E 9333
ELECTRICAL
AUG 31 1988
STATE OF CALIFORNIA

ENGINEERING, INC.
CONSULTING ELECTRICAL ENGINEERS
(619) 242-3369

Date; MARCH 23, 1989
Design; HEIMBERGER
Job No; 88007

Description; As Built
ELECTRICAL SITE PLAN

Sheet 20 OF 22
DWG. # E-1
P-0418

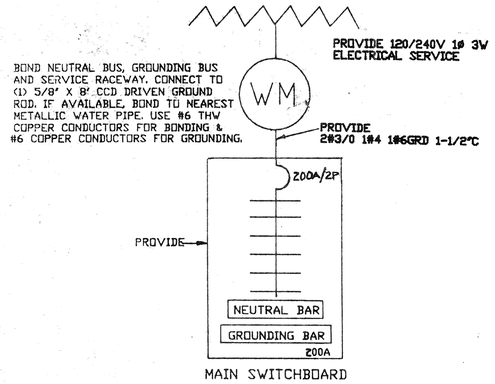

A.C SINGLE LINE DIAGRAM (3/E2)
NO SCALE

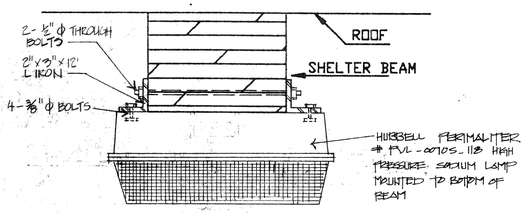

FIXTURE D
SHELTER LIGHT MOUNTING DETAIL (5/E2)
NO SCALE

NOTES:
1. LAY CONDUIT, FILL, COMPACT TO 90%. MATCH SURROUNDINGS.

BRANCH CIRCUIT TRENCH DETAIL (10/E2)
NO SCALE

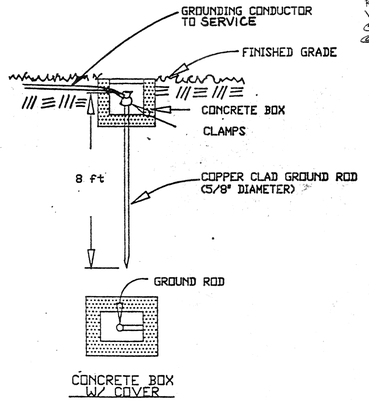

MADE ELECTRODE GROUND SYSTEM (9/E2)
NO SCALE

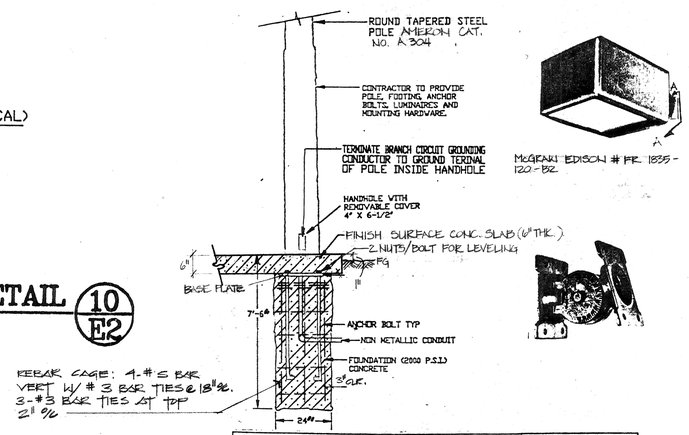

SHAFT SIZE		BOLT	ANCHOR	TENON
LENGTH/TOP	BOTTOM	CIRCLE	BOLTS (4)	SIZE
30'-0" 13-7/8"	8"	11-1/2"	1" X 60" X 4"	TO MATCH FIXTURE

FIXTURE C
PLAY AREA LUMINAIRE DETAIL (2/E2)
NO SCALE

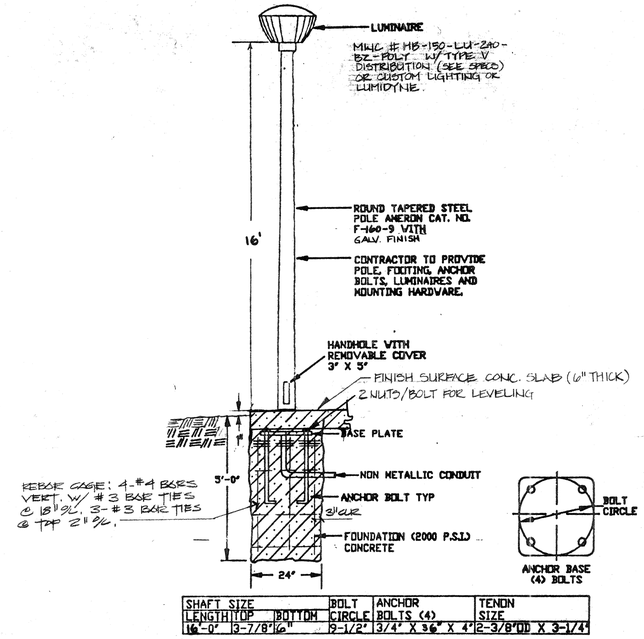

SHAFT SIZE		BOLT	ANCHOR	TENON
LENGTH/TOP	BOTTOM	CIRCLE	BOLTS (4)	SIZE
16'-0" 13-7/8"	16"	9-1/2"	3/4" X 36" X 4"	2-3/8"OD X 3-1/4"

FIXTURES A & B
WALKWAY LUMINAIRE DETAIL (1/E2)
NO SCALE

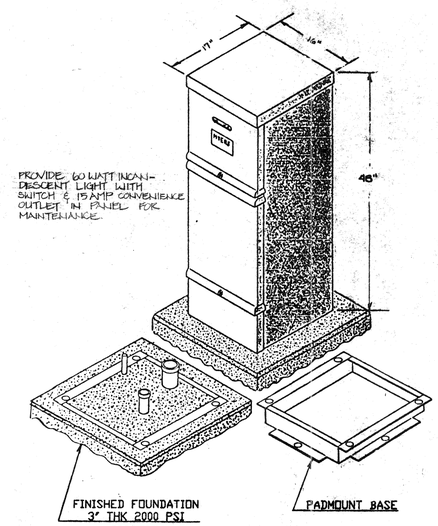

NOTES:
1. PROVIDE WITH GALVANIZED ANCHOR BOLTS. (NOT SHOWN)
2. PROVIDE IN NEMA 3R ENCLOSURE, CONSTRUCTED OF 10 GA. STEEL

SWITCHBOARD
SERVICE PEDESTAL ELEVATION (7/E2)
NO SCALE

LUMINAIRE AIMING DATA (8/E2)

PLAY AREA
RUTLAND PARK

AVERAGE FOOTCANDLES = 6.54
MAXIMUM FOOTCANDLES = 21.66
MINIMUM FOOTCANDLES = 2.14
MAX./MIN. RATIO = 10.1 : 1
AVG./MIN. RATIO = 3.0 : 1

THE FOLLOWING LUMINAIRE(S) WERE USED IN THIS COMPUTATION:

LUMINAIRE TYPE 1 : PHOTOMETRIC TEST NO. 2688
150W HPS
SPAULD VA-150-HPS-16
NEMA. LUMEN RATING = 16000 LMS.
MAINTENANCE FACTOR = 0.81

LUMINAIRE TYPE 2 : PHOTOMETRIC TEST NO. 2452
1000W HPS
SPAULD CEII-1000-HPS-3
NEMA. LUMEN RATING = 140000 LMS.
MAINTENANCE FACTOR = 0.81
*** LUMINAIRE TILT ANGLE = 70.00 DEGREES ***

LIST OF LUMINAIRE POSITIONS AND ORIENTATIONS

LUMINAIRE ORIENTATION IS MEASURED FROM THE FORWARD Y DIRECTION.

POLE NO.	LUMINAIRE NO.	TYPE	X CO-ORD. FEET	Y CO-ORD. FEET	HEIGHT ABOVE PAVEMENT	ORIENTATION ANGLE
1	1	1	5.00	17.00	16.00	0.0
2	1	1	95.00	95.00	16.00	0.0
3	1	1	90.00	100.00	16.00	0.0
4	1	2	79.36	49.23	30.00	220.0
4	2	2	79.23	50.64	30.00	310.0

TOTAL NO. OF LUMINAIRES = 5

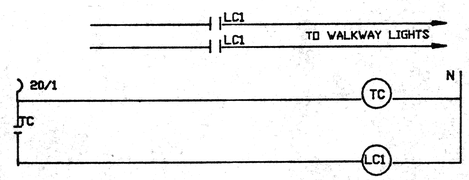

NOTE:
1. MOUNT TIME CLOCK AND CONTACTORS IN SERVICE PEDESTAL.
2. RATING OF CONTACTS TO MATCH RATING OF CIRCUIT BREAKERS.
3. ALL CONTROL WIRING TO BE #12 THWN/THHN CU.
4. PROVIDE TIMECLOCK, CONTACTORS AND CONTROLS FOR BOTH A AND B WALKWAY LIGHTS AND PLAY AREA LIGHTS. 3 TOTAL

CIRCUIT "A" (#2 and #4) TO BE ON AT DUSK AND OFF AT DAWN (P.E. CONT.)
CIRCUIT "B" (#3 and #5) TO BE ON AT DUSK AND OFF AT CURFEW (P.E./T.C. OVERRIDE)
PROVIDE SEPERATE CONTACTOR FOR EACH CIRCUIT AND SEPERATE H.O.A. SWITCH FOR EACH CIRCUIT @ PANEL

TIMED CONTACTOR CONTROL
OF WALKWAY/PLAY AREA LIGHTS (6/E2)
NO SCALE

REGISTERED PROFESSIONAL ENGINEER
JOSEPH M. NOVY
NO. E 9333
AUG 31 1988
ELECTRICAL
STATE OF CALIFORNIA

AUG 18 1989

LANDSCAPE ARCHITECTURE AND PLANNING
515 W. COMMONWEALTH, SUITE 205
FULLERTON, CA 92632 (714)773-0973
ASLA
Heimberger Hirsch

Project;
RUTLAND PARK
CITY OF RIVERSIDE
RUTLAND AVE
RIVERSIDE CALIFORNIA

REA ENGINEERING, INC.
CONSULTING ELECTRICAL ENGINEERS
(619) 242-3369

Date; MARCH 23, 1989
Design; HEIMBERGER
Job No; 88007

Description;
A.C. SINGLE LINE DIAGRAM

Sheet 21 of 22
DWG. # E2
P-0418

AC BREAKER ASSIGNMENTS

TYPE	MYERS	PANEL MAIN SWBRD	
VOLTS	120/240	LOCATION REF SITE PLAN	
PHASE	1	FEEDER	REF A.C. SINGLE LINE
WIRE	3	AMPS	200
M.C.B.	200AMPS	MOUNTING	PAD

CKT #	DESCRIPTION LOCATION	LOAD TYPE	VOLT AMPS	PH	AMPS AMPS	POLE	B.C. CONDR	GRD WIRE
1	SPRINKLER	MISC	1500	A	20	1	#10	#12
2	WALKWAY LIGHTS-A	LITES	840	A	20	2	#10	#12
3	WALKWAY LIGHTS-B	LITES	756	B	--		#10	
4	WALKWAY LIGHTS-A	LITES	840	B	20	2	#10	#12
5	WALKWAY LIGHTS-B	LITES	756	A	--		#10	#12
6	PLAY AREA LIGHTS	LITES	1200	A	20	2	#10	#12
7	SHELTER LIGHT	MISC	168	B	20	1	#10	#12
8	PLAY AREA LIGHTS	LITES	1200	B	--		#10	
9	LTG CONTACTORS	MISC	500	A	20	1	#10	#12
10	SPACE			A				
11	SPACE			B				
12	SPACE			B				
13	SPACE			A				
14	SPACE			A				
15	SPACE			B				
16	SPACE			B				
17	SPACE			A				
18	SPACE			A				
19	SPACE			B				
20	SPACE			B				
21	SPACE			A				
22	SPACE			A				
23	SPACE			B				
24	SPACE			B				

TOTAL VOLTAMPS 7760
AMPS/LEG 32 AMP
PANELBOARD

PERCENT CONDUIT FILL

*** RUTLAND PARK ***

*** #	INSULATION	CONDUCTOR	QTY	CONDUIT	FILL
1	THW	10	2		
	THW	12	1	1/2 INCH	29.1 % (Allowable 40%)
2	THW	10	4		
	THW	12	1	3/4 INCH	28.5 % (Allowable 40%)
3	THW	8	2		
	THW	10	7		
	THW	12	1	1 INCH	24.9 % (Allowable 40%)
4	THW	8	2		
	THW	10	4		
	THW	12	1	1 INCH	31.7 % (Allowable 40%)
5	THW	10	6		
	THW	12	1	1 INCH	24.9 % (Allowable 40%)
6	THW	10	7		
	THW	12	1	1 INCH	32.2 % (Allowable 40%)

VOLTAGE DROP CALCULATIONS

VOLTAGE DROP.....****
RUTLAND PARK WALKWAY LIGHTING ERROR FACTOR
02/21/89 WATTS---> 150.0000 1.000
240 VOLTS X 5% = 12.000 VOLTS
#10 COPPER -----> 0.0013 OHMS/FOOT
'A' SOUTH

OUTLET	DISTANCE (FT)	VD
10	0	0
9	0	0
8	0	0
7	0	0
6	0	0
5	0	0
4	400	3.0240
3	170	0.9639
2	200	0.7560
1	200	0.3780
		5.1219<-- VOLTAGE DROP
		2.1341<---% VOLTAGE DROP

VOLTAGE DROP.....****
RUTLAND PARK WALKWAY LIGHTIERROR FACTOR
02/21/89 WATTS---> 150.00
240VOLTS X 5% = 12.00 VOLTS
#10 COPPER -----> 0.0013 OHMS/FOOT
'B' SOUTH

OUTLET	DISTANCE (FT)	VD
10	0	0
9	0	0
8	0	0
7	0	0
6	620	7.0308
5	120	1.1340
4	70	0.5292
3	100	0.5670
2	200	0.7560
1	200	0.3780
TOT DIST	---------	10.3950 VOLTAGE DROP
	---------	4.3313% VOLTAGE DROP

VOLTAGE DROP.....****
RUTLAND PARK WALKWAY LIGHTING ERROR FACTOR
02/21/89 WATTS---> 150.0000 1.000
240 VOLTS X 5% = 12.000 VOLTS
#10 COPPER -----> 0.0013 OHMS/FOOT
'A' NORTH

OUTLET	DISTANCE (FT)	VD
10	0	0
9	0	0
8	0	0
7	0	0
6	360	4.0824
5	0	0
4	120	0.9072
3	200	1.1340
2	260	0.9828
1	220	0.4158
		7.5228<-- VOLTAGE DROP
		3.1343<---% VOLTAGE DROP

VOLTAGE DROP.....****
RUTLAND PARK WALKWAY LIGHTIERROR FACTOR
02/21/89 WATTS---> 150.00
240VOLTS X 5% = 12.00 VOLTS
#10 COPPER -----> 0.0013 OHMS/FOOT
'B' NORTH

OUTLET	DISTANCE (FT)	VD
10	0	0
9	0	0
8	0	0
7	0	0
6	0	0
5	0	0
4	570	3.2319
3	230	0.8694
2	200	0.3780
1		
TOT DIST	---------	4.4793 VOLTAGE DROP
	---------	1.8664% VOLTAGE DROP

*** RUTLAND PARK ***

	TYPE	CONDUCTOR	VOLTS	AMPS/LEG	LOOP DIST.
PLAYGRND	CU	10	240	8.34	440

THIS CIRCUIT HAS A VOLTAGE DROP OF 4.40352 VOLTS WHICH = 1.8348 %
3 % ALLOWED

	TYPE	CONDUCTOR	VOLTS	AMPS/LEG	LOOP DIST.
TENNIS	CU	6	240	12	1200

THIS CIRCUIT HAS A VOLTAGE DROP OF 7.056 VOLTS WHICH = 2.94 %
3 % ALLOWED

LANDSCAPE ARCHITECTURE AND PLANNING

ASLA

Heimberger Hirsch

Project;

RUTLAND PARK
CITY OF RIVERSIDE
RUTLAND AVE
RIVERSIDE CALIFORNIA

Revisions	By
Rev 1 2/22/89 Per Plan Check	aec

REGISTERED PROFESSIONAL ENGINEER
JOSEPH M. ROCK
NO. E 9333
AUG 31 1988
ELECTRICAL
STATE OF CALIFORNIA

AUG 18 1989

DREW ENGINEERING, INC.
CONSULTING ELECTRICAL ENGINEERS
(619) 242-3369

Date; MARCH 20, 1989
Design;
Job No; 88007

Description;
A.C. BREAKER ASSIGNMENT

Sheet 22 OF 22
DWG. # E-3
P-0418