DOOR, FRAME & HARDWARE SCHEDULE

~ALL DOORS OPERABLE~

DOOR NO.	ROOM NAME	QTY	SIZE	1 & 2 TYPE	3 HINGE	4 LOCK	5a CLOSER	5b PULL PLATE	5c RECESSED PULL	5d THRESH	5e SWEEP	NOTES
1	MEN	1	3' x 7'	GATE	CONT	4 a 2	NO	NO		NO	NO	6a
	WOMEN	1										
2	UTILITY ROOM	1	3' x 7'	HM	CONT	4 a 1	NO	BOTH SIDES		270A	315CN	
3	ELECTRICAL	1	3' x 7'	HM	CONT	4 a 1	NO	BOTH SIDES		270A	315CN	
4	MECH	2	2'-8" x 7'	CHAIN LINK GATES	PIN	BY OTHERS						
5	CONCESSION	1	3' x 7'	HM	CONT	4 a 2	NO		EXT ONLY	229A	315CN	6a. 6c
6	CONCESSION WINDOW SHUTTER	2	NOMINAL 4' x 3'	HM	CONT	BARREL BOLTS	NO		INT ONLY	NO	315CN	6a
7	CONCESSION WINDOW	2	47½" x 35¾"	ALUMINUM 275 SINGLE PANEL (R/L & L/R) MANUAL OPEN / SELF CLOSING								6b

NOTES:

1. DOOR TYPES:
   a) H.M.: GALVANIZED HOLLOW METAL, 14 ga. DOOR w/ 14 ga. FRAME.
   b) GATE: CUSTOM MADE STAINLESS STEEL "SEE THRU" DOOR IN 14 ga. FRAME WITH S.S. BARS.
2. ALL H.M. DOOR FRAMES:
   a) WELDED WITH MASONRY ANCHORS.
   b) 4¾" WIDE OVERALL.
   c) 4" MASONRY HEADERS.
3. HINGE SPECS:
   a) CONT: PEMKO KCFM-83" STD DUTY CONTINUOUS GEAR HINGE.
4. LOCKS:
   a) BEST DEADBOLTS 83I 7 - STK 626 CS
      1) K - KEY ONE SIDE, THUMB TURN LOCKS AND UNLOCKS.
      2) M - KEY BOTH SIDES.
5. HARDWARE SPECS:
   a) CLOSERS: LCN 4041 REG-AL (ADD CUSH ARM FOR OUTSWING DOORS).
   b) PULL PLATE: TRIMCO 1017.
   c) RECESSED PULL: CUSTOM MADE S.S.
   d) THRESH: PEMKO #229A (FOR TILE FLOORS) & PEMKO #270A (FOR NON-TILE FLOORS).
   e) SWEEP: PEMKO 315CN.
6. OTHER:
   a) MAKE PROVISION TO LOCK OPEN.
   b) READY ACCESS WINDOW MODEL 275. 47½"x 35¾" WITH 216 sq. in. SERVICE OPENING (RESTRICTION PANEL)
   c) AIR CURTAIN (SUPPLIED BY TPRC). FANTECH AC300.

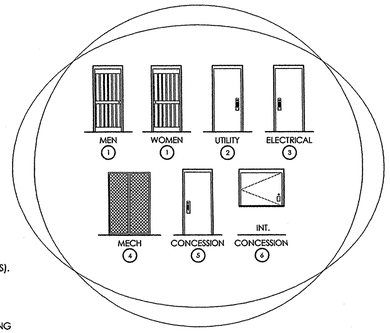

STRUCTURAL DESIGN

~SEE SHEETS A-2 & A-3 FOR INTERIOR AND EXTERIOR FINISHES~

COMPONENT	GENERIC DESCRIPTION	SPECIFIC MATERIAL LIST	NOTES
FOUNDATION / FLOOR DECK:			
CONCRETE SLAB			#1
PERIMETER FRAMEWORK	STRUCTURAL STEEL ANGLE	L6"x 6"x 3/16"	
REINFORCEMENT	REBAR	#4 @ 16"oc E.W. TOP & BOTTOM	
CONCRETE	99.4% WATER AND URINE RESISTANT	8" MAT DESIGN 4000 PSI (DESIGN BASIS IS 2500 psi) WITH INTEGRAL ADDITIVES FOR CORROSION	
WALLS:			
FRAMING (EXT):			
TO 7'-4"	CMU BLOCK	4" SPLIT-FACE CONCRETE BLOCK (TAN)	PG A-2
CAP BEAM	STEEL	TS6"x 4"x 1/8" (46 ksi)	
ABOVE 7'-4" OR CAP BEAM	2 1/2" 18ga. GALV STEEL @ 16" oc	250S162-43 STUDS, 250T200-43 TRACK	
FRAMING (INT):			
TO 7'-4"	CMU BLOCK	4" PRECISION CONCRETE BLOCK (GRAY)	
CAP BEAM	STEEL	TS6"x 4"x 1/8" (46 ksi)	
ABOVE 7'-4" OR CAP BEAM	2 1/2" 18ga. GALV STEEL @ 16" oc	250S162-43 STUDS, 250T200-43 TRACK	
SHEATHING (ABOVE CAP BEAM)			
EXTERIOR	7/16" OSB	7/16" APA RATED SHEATHING	#2
ROOF:			
MIDSPAN BEAM	STEEL	TS4"x 4"x 1/8" (46 ksi)	
RAFTERS	6" 18ga. GALV. STEEL @ 24"oc	600S200-43 RAFTERS, 600T200-43 TRACK	
SHEATHING (TOP OF RAFTER)	5/8" T&G OSB	19/32 APA RATED (40/20)	
INSULATION	R19 FIBERGLASS		
SHEATHING (BOTTOM OF RAFTER)	FRC (STUCCO / SMOOTH) OVER 5/8" T&G OSB	19/32 APA RATED (40/20)	
FASCIA	STEEL	14ga. GALV. STEEL (WITH 1" RETURN AT EAVE)	

NOTES:
1. COAT WITH ADDITIVE FOR URINE AND MOISTURE RESISTANCE.
2. PAINT WALL SHEATHING FOR MOISTURE PROTECTION (BOTH SIDES).
3. PAINT WALL SHEATHING FOR MOISTURE PROTECTION (ONE SIDE).

COUNTY OF RIVERSIDE
COMMUNITY HEALTH AGENCY
DEPARTMENT OF ENVIRONMENTAL HEALTH
The proposed construction/equipment installation is approved.
See attached correction sheet.
Approved 3-6-07 By FP#126
This approval does not authorize the violation of any law, ordinance, or other regulation.

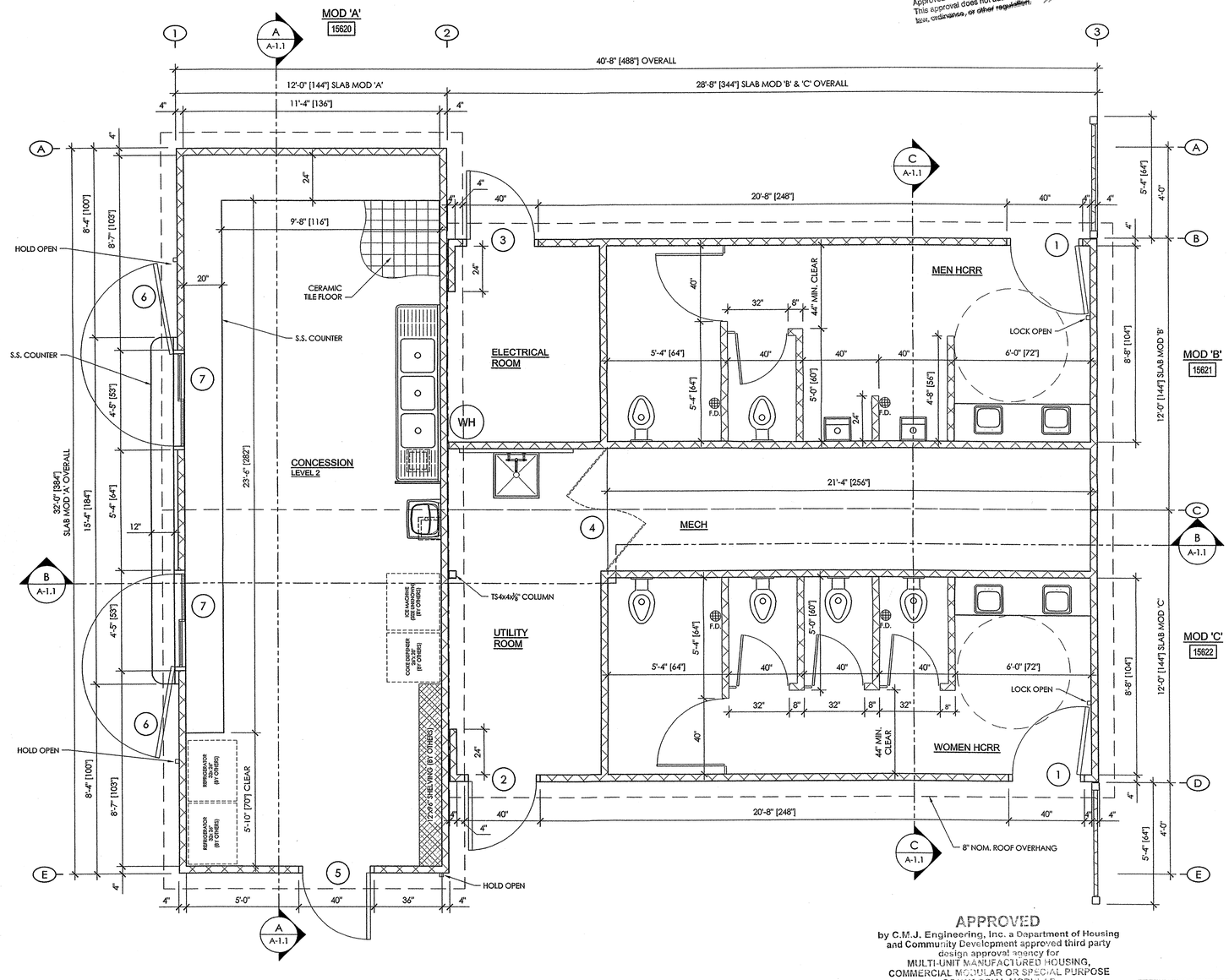

APPROVED
by C.M.J. Engineering, Inc. a Department of Housing and Community Development approved third party design approval agency for
MULTI-UNIT MANUFACTURED HOUSING,
COMMERCIAL MODULAR OR SPECIAL PURPOSE COMMERCIAL MODULAR
These plans have reviewed according to the requirements found in the California Code of Regulations Title 25, Chapter 3, Subchapter 2. The mfg/applicant is solely responsible for compliance with all applicable laws and regulations. Plan reviews by C.M.J. Engineering, Inc. are not a comprehensive analysis of the design and are not provided with any expressed or implied warranties. MAR 12 2007
APPROVED _____
Plan Approval No. CMJ- FP126
EXPIRES JUN 30 2008

2-9-07
REGISTERED PROFESSIONAL ENGINEER ROCK M. SHETLER 59228 CIVIL STATE OF CALIFORNIA
EXPIRES: 6/30/2007

BUILDING LAYOUT NOTES:
1. SLAB SIZE IS SLIGHTLY LARGER THAN BUILDING SIZE.
2. BUILDING SIZE IS DETERMINED BY INTERIOR DIMENSIONS OF THE RESTROOMS. DIMENSIONS ARE FACE OF BLOCK TO FACE OF BLOCK OR FACE OF OSB.
3. START LAYOUT BY MEASURING 4" IN FROM EDGE OF SLAB (AFTER VERIFYING SLAB IS CORRECT). THIS WILL BE THE INSIDE FACE OF THE EXTERIOR BLOCK WALLS.

FLOOR PLAN

3/8" = 1'-0"

DATE	REVISION	BY

Blazer INDUSTRIES, INC. P.O. BOX 489 ■ AUMSVILLE, OR 97325-0489

COPYRIGHT 2007, BLAZER INDUSTRIES, INC. THIS MATERIAL IS THE EXCLUSIVE PROPERTY OF BLAZER INDUSTRIES, INC. AND SHALL NOT BE REPRODUCED, USED, OR DISCLOSED TO OTHERS EXCEPT AS AUTHORIZED BY THE WRITTEN PERMISSION OF BLAZER INDUSTRIES.

RESTROOM DESIGNER: THE PUBLIC RESTROOM CO.
639 Isbell Road, Suite 440, Reno, NV 89509
1-888-889-2060
www.restroomdesign.com

PROJECT ARCHITECT:

PROJECT OWNER: CITY OF RIVERSIDE RIVERSIDE, CALIFORNIA

PROJECT NAME & LOCATION: REID PARK RIVERSIDE, CALIFORNIA

SHEET TITLE: FLOOR PLAN/SECTION

Approved for Const:
File Copy:
Drawn By: TJI
Start Date: 1-15-07
Job No: 15620-22

A-1.0

R:\ADT 2006 Drawings\Restroom Buildings\15620-22 Reid Park\Reid Park_rev0.dwg, A-1.0 Fr Plan, 2/9/2007 1:47:26 PM

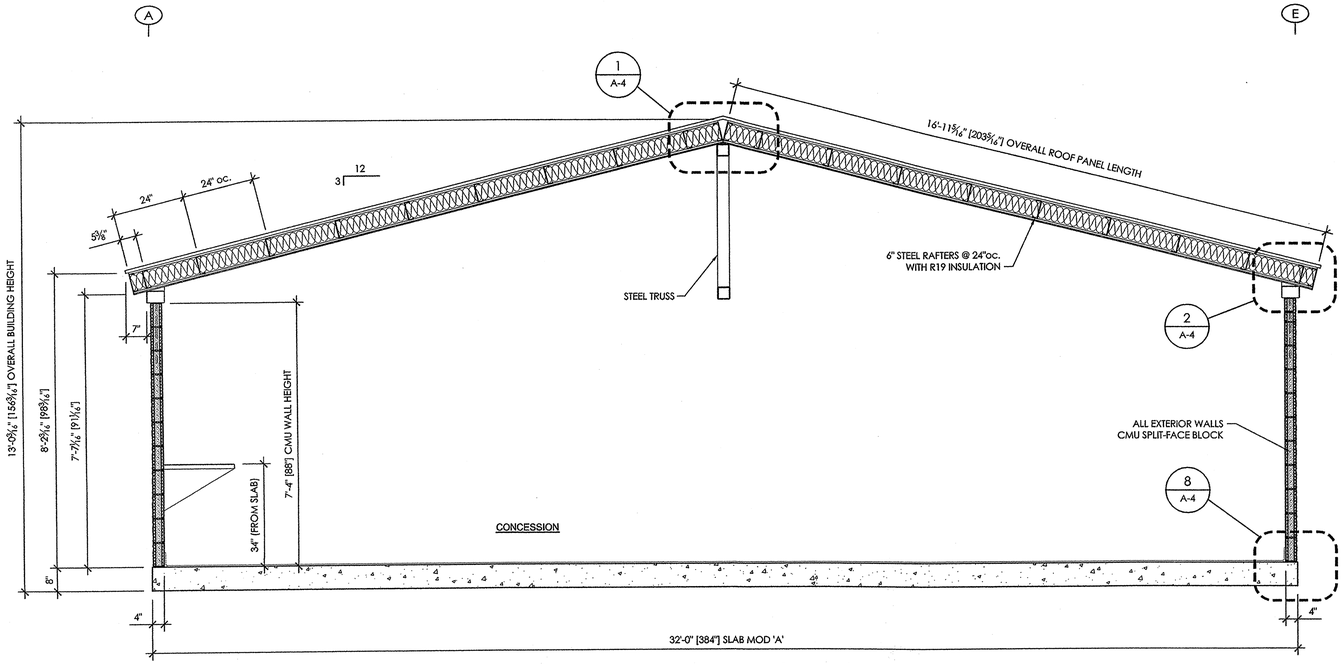

SECTION - A A

1/2" = 1'-0"

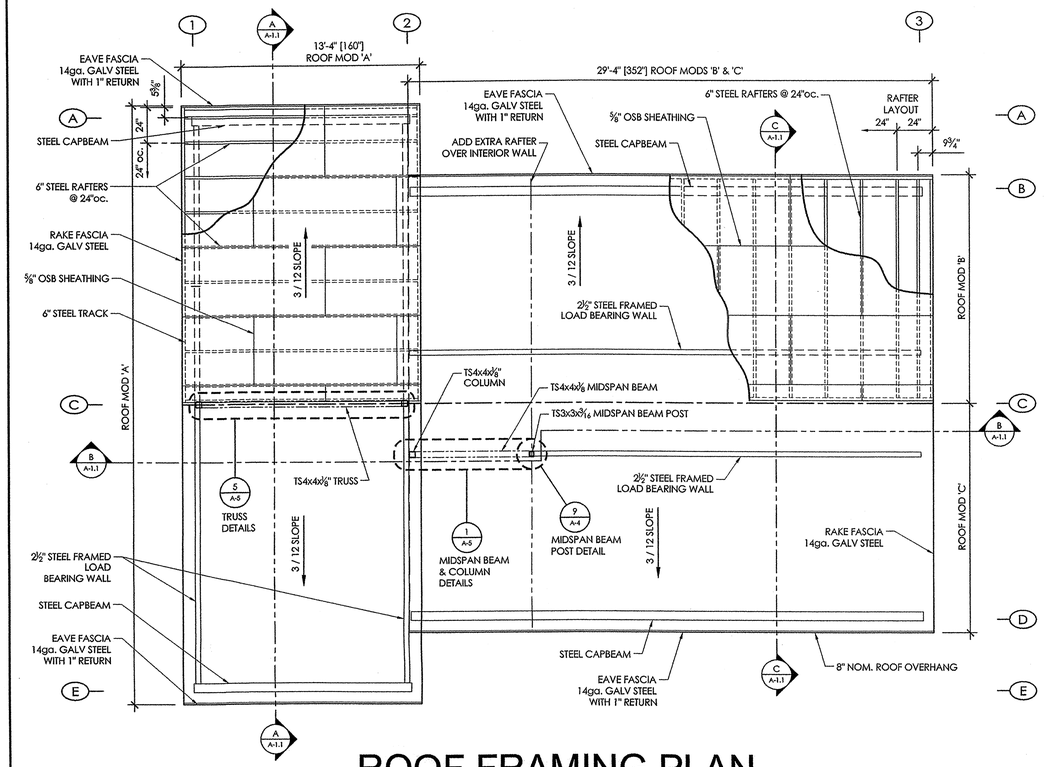

ROOF FRAMING PLAN

1/4" = 1'-0"

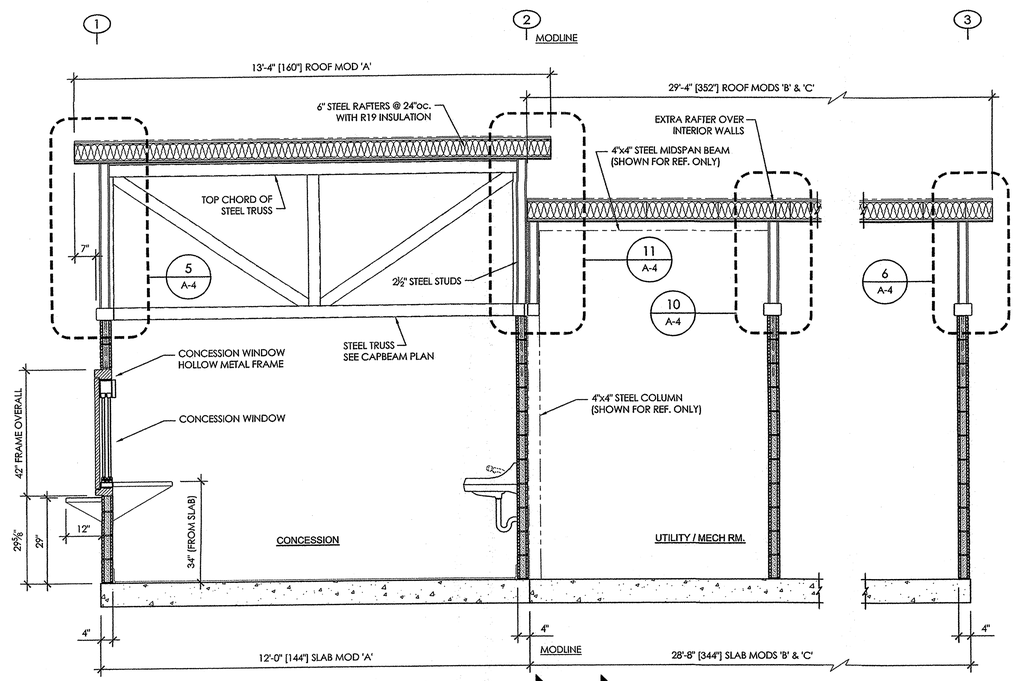

SECTION - B B

1/2" = 1'-0"

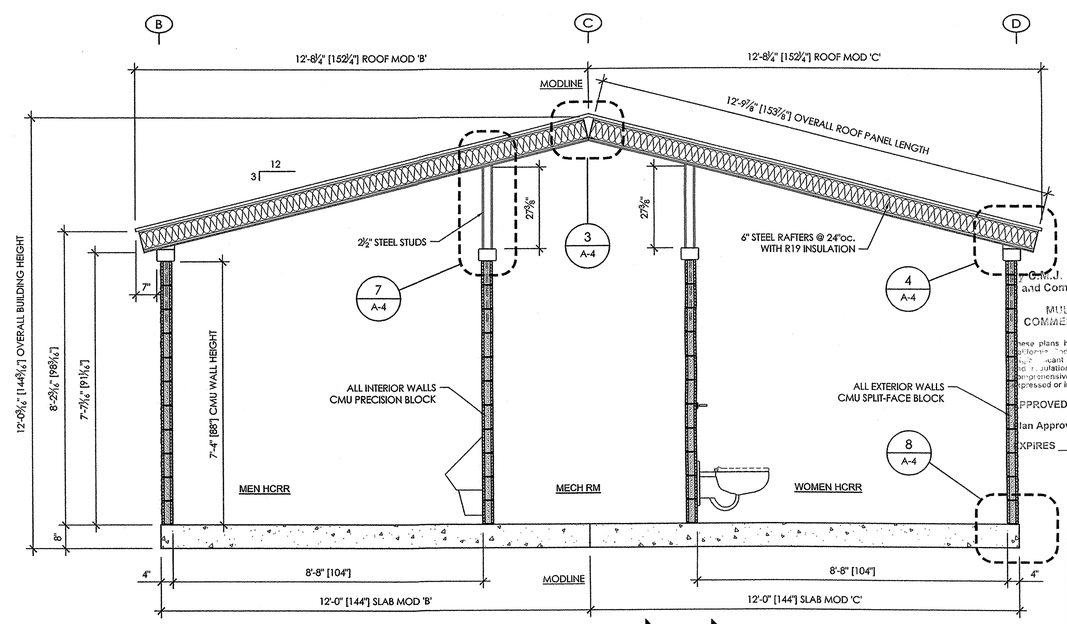

SECTION - C C

1/2" = 1'-0"

APPROVED
C.M.J. Engineering, Inc. a Department of Housing and Community Development approved third party design approval agency for
MULTI-UNIT MANUFACTURED HOUSING,
COMMERCIAL MODULAR BUILDINGS AND PURPOSE COMMERCIAL MODULAR
These plans have reviewed according to the requirements found in the California Title 25 Regulations, Chapter 3, Subchapter 2. The owner/agent is solely responsible for compliance with all applicable laws and regulations. Plan reviews by C.M.J. Engineering, Inc. are not comprehensive analysis of the design and are not provided with any expressed or implied warranties.
MAR 1 2 2007
APPROVED _____
Plan Approval No. CMJ- F8121
EXPIRES JUN 3 0 2008

2-9-07
REGISTERED PROFESSIONAL ENGINEER
ROCK M. SHETLER
59228
CIVIL
STATE OF CALIFORNIA
EXPIRES: 6/30/2007

DATE	REVISION	BY

Blazer INDUSTRIES, INC.
P.O. BOX 489 ■ AUMSVILLE, OR 97325-0489

COPYRIGHT 2007, BLAZER INDUSTRIES, INC. THIS MATERIAL IS THE EXCLUSIVE PROPERTY OF BLAZER INDUSTRIES, INC. AND SHALL NOT BE REPRODUCED, USED, OR DISCLOSED TO OTHERS EXCEPT AS AUTHORIZED BY THE WRITTEN PERMISSION OF BLAZER INDUSTRIES.

RESTROOM DESIGNER:
THE PUBLIC RESTROOM CO.
639 Isbell Road, Suite 440, Reno, NV 89509
1-888-888-2060
www.restroomdesign.com

PROJECT ARCHITECT:

PROJECT OWNER:
CITY OF RIVERSIDE
RIVERSIDE, CALIFORNIA

PROJECT NAME & LOCATION:
REID PARK
RIVERSIDE, CALIFORNIA

SHEET TITLE:
FLOOR PLAN/SECTION

Approved for Const:
File Copy:
Drawn By: TJI
Start Date: 1-15-07
Job No: 15820-22

A-1.1

R:\ADT 2006 Drawings\Restroom Buildings\15820-22 Reid Park\Reid Park_rev0.dwg, A-1.1 Sections, 2/9/2007 1:47:31 PM

EXTERIOR FINISH SCHEDULE

	DESCRIPTION	FINISH	BRAND/COLOR	NOTES
WALLS				
TO 7'-4"	CMU BLOCK	SEALER ONLY	CLEAR	2 COATS SEALER
CAP BEAM	STEEL	PAINT	PITTSBURGH - MATCH TAYLOR SADDLE TAN	1 COAT PRIMER, 2 COATS FINISH
ABOVE CAP BEAM				
GABLE SIDING	JAMES HARDIE (OR EQUAL) - FRC STUCCO PATTERN	PAINT	PITTSBURGH - MATCH TAYLOR SADDLE TAN	1 COAT PRIMER, 2 COATS FINISH
VENT POSTS	STEEL	PAINT	PITTSBURGH - MATCH TAYLOR SADDLE TAN	1 COAT PRIMER, 2 COATS FINISH
GABLE VENTS	STAINLESS STEEL WIRE MESH	POLISHED	NATURAL	
ROOF				
ROOFING	26 ga. STANDING SEAM METAL	TAYLOR METAL PRODUCTS	SADDLE TAN	
SOFFITS	JAMES HARDIE (OR EQUAL) - FRC STUCCO PATTERN	PAINT	PITTSBURGH - MATCH TAYLOR SADDLE TAN	1 COAT PRIMER, 2 COATS FINISH
FASCIA	14ga. FORMED GALV. STEEL	PAINT	PITTSBURGH - MATCH TAYLOR SADDLE TAN	1 COAT PRIMER, 2 COATS FINISH
DOORS				
DOORS AND FRAMES	GALVANIZED HOLLOW METAL	PAINT	PITTSBURGH - MATCH TAYLOR SADDLE TAN	1 COAT PRIMER, 2 COATS FINISH
GATES	STAINLESS STEEL	POLISHED	NATURAL	
SIGHT SCREENS	STEEL	POWDER COAT	MATCH TAYLOR SADDLE TAN	1 COAT PRIMER, 2 COATS FINISH

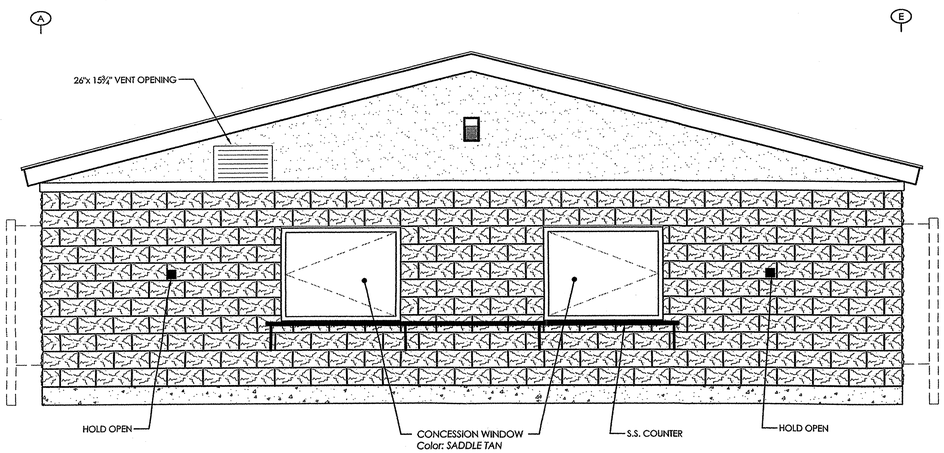

WALL 1

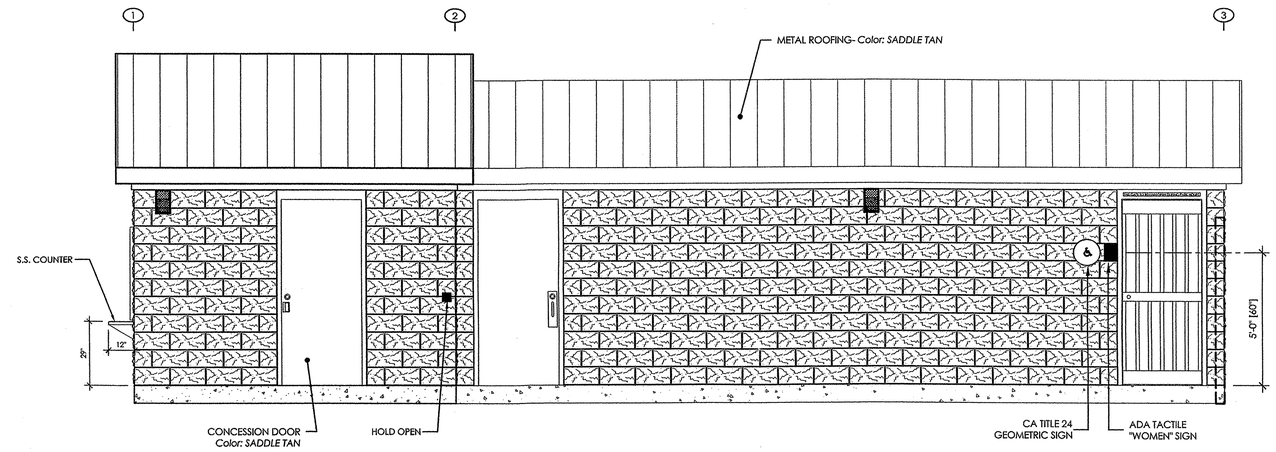

WALL E & D

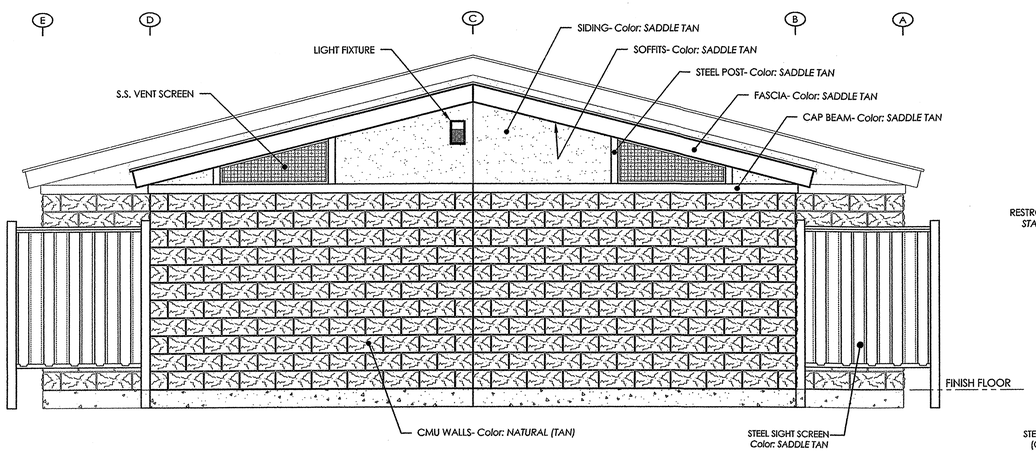

WALL 3

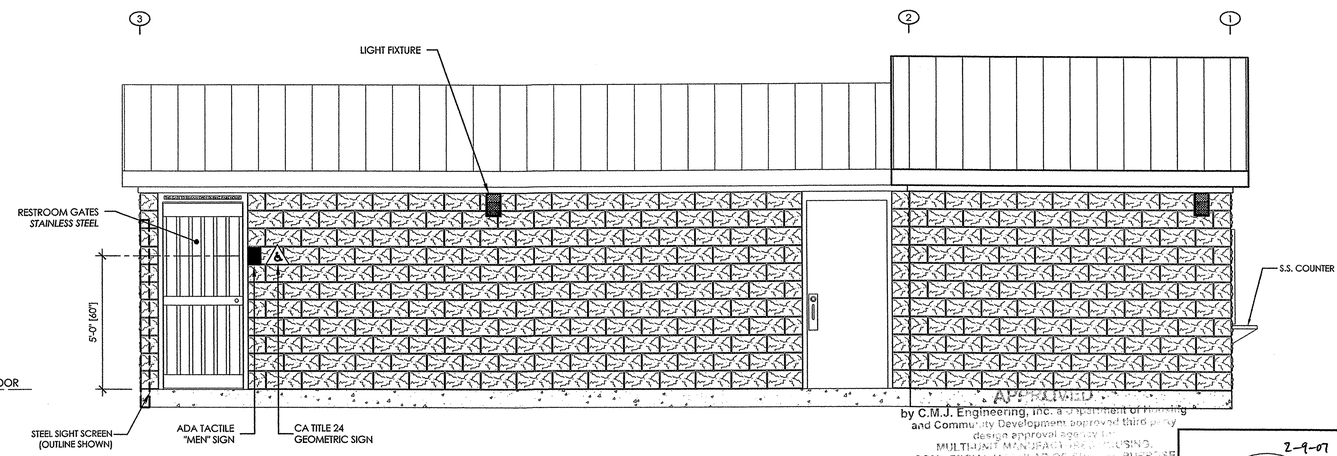

WALL A & B

EXTERIOR ELEVATIONS

3/8" = 1'-0"

APPROVED
by C.M.J. Engineering, Inc. a Department of Housing and Community Development approved third party design approval agency for
MULTI-UNIT MANUFACTURED HOUSING,
COMMERCIAL MODULAR OR SPECIAL PURPOSE
COMMERCIAL MODULAR
These plans have reviewed for compliance to the requirements found in the California Code of Regulations, Title 25, Chapter 1, Subchapter 2. The engineer of record is solely responsible for compliance with all applicable laws and regulations. Plan reviews by C.M.J. Engineering, Inc. are not a comprehensive analysis of the design and are not provided with any expressed or implied warranties.

APPROVED MAR 1 2 2007
Plan Approval No. CMJ- F8126
EXPIRES JUN 3 0 2008

2-9-07
REGISTERED PROFESSIONAL ENGINEER
ROCK M. SHETLER
59228
CIVIL
STATE OF CALIFORNIA
EXPIRES: 6/30/2007

DATE	REVISION	BY

Blazer INDUSTRIES, INC.
P.O. BOX 489 ■ AUMSVILLE, OR 97325-0489

COPYRIGHT 2007, BLAZER INDUSTRIES, INC. THIS MATERIAL IS THE EXCLUSIVE PROPERTY OF BLAZER INDUSTRIES, INC. AND SHALL NOT BE REPRODUCED, USED, OR DISCLOSED TO OTHERS EXCEPT AS AUTHORIZED BY THE WRITTEN PERMISSION OF BLAZER INDUSTRIES.

RESTROOM DESIGNER:
THE PUBLIC RESTROOM CO.
639 Isbell Road, Suite 440, Reno, NV 89509
1-888-888-2060
www.restroomdesign.com

PROJECT ARCHITECT:

PROJECT OWNER:
CITY OF RIVERSIDE
RIVERSIDE, CALIFORNIA

PROJECT NAME & LOCATION:
REID PARK
RIVERSIDE, CALIFORNIA

SHEET TITLE:
EXTERIOR ELEVATIONS

Approved for Const:
File Copy:
Drawn By: TJI
Start Date: 1-15-07
Job No: 15620-22

A-2

R:\ADT 2006 Drawings\Restroom Buildings\15620-22 Reid Park\Reid Park_rev0.dwg, A-2Ext, 2/9/2007 11:04:08 AM

INTERIOR FINISH SCHEDULE

	DESCRIPTION	FINISH	BRAND / COLOR	NOTES
FLOOR:				
RESTROOM	CONCRETE	LIGHT BROOM	NATURAL	ADDITIVE FOR 99% URINE/MOISTURE RESISTANCE
MECHANICAL / UTILITY	CONCRETE	LIGHT BROOM	NATURAL	ADDITIVE FOR 99% URINE/MOISTURE RESISTANCE
ELECTRICAL	CONCRETE	LIGHT BROOM	NATURAL	ADDITIVE FOR 99% URINE/MOISTURE RESISTANCE
CONCESSION	TILE	6 x 6 QUARRY TEXTURES	DALTILE DIABLO RED #OT01	
COVE BASE	TILE	5 x 6 QUARRY TEXTURES Q3565	DALTILE DIABLO RED #OT01	
GROUT	EPOXY	KERAPOXY	MAPEI - GRAY #09	
WALL:				
RESTROOM TO 7'-4"	CMU BLOCK	PAINT	PITTSBURGH/PURE WHITE #90-374 PITT-TECH	1 COAT BLOCK FILLER, 2 COATS GLOSS
CAP BEAM	STEEL	PAINT	PITTSBURGH/PURE WHITE #90-374 PITT-TECH	1 COAT PRIMER, 2 COATS GLOSS
ABOVE CAP BEAM	JAMES HARDIE (OR EQUAL) FRC STUCCO PATTERN	PAINT	PITTSBURGH/PURE WHITE #90-374 PITT-TECH	1 COAT PRIMER, 2 COATS GLOSS
MECH / UTILITY / ELECTRICAL TO 7'-4"	CMU BLOCK	NONE	NATURAL	
CAP BEAM	STEEL	PAINT	PITTSBURGH/PURE WHITE #90-374 PITT-TECH	1 COAT PRIMER, 2 COATS GLOSS
ABOVE CAP BEAM	OSB	PAINT	PITTSBURGH/PURE WHITE #90-374 PITT-TECH	1 COAT PRIMER, 2 COATS GLOSS
CONCESSION TO 7'-4"	CMU BLOCK	PAINT	PITTSBURGH/PURE WHITE #90-374 PITT-TECH	1 COAT BLOCK FILLER, 2 COATS GLOSS
CAP BEAM	STEEL	PAINT	PITTSBURGH/PURE WHITE #90-374 PITT-TECH	1 COAT PRIMER, 2 COATS GLOSS
ABOVE CAP BEAM	JAMES HARDIE (OR EQUAL) FRC SMOOTH	PAINT	PITTSBURGH/PURE WHITE #90-374 PITT-TECH	1 COAT PRIMER, 2 COATS GLOSS
TRIM	1 x CEMENT BOARD	PAINT	PITTSBURGH/PURE WHITE #90-374 PITT-TECH	1 COAT PRIMER, 2 COATS GLOSS
CEILING:				
RESTOOMS / MECH / UTILITY / ELECT	JAMES HARDIE (OR EQUAL) FRC STUCCO PATTERN	PAINT	PITTSBURGH/PURE WHITE #90-374 PITT-TECH	1 COAT PRIMER, 2 COATS GLOSS
CONCESSION	JAMES HARDIE (OR EQUAL) FRC SMOOTH PATTERN	PAINT	AQUAPON 98-1 PORCELAIN WHITE	1 COAT PRIMER, 2 COATS GLOSS
ALL ROOMS	BEAMS	PAINT	PITTSBURGH/PURE WHITE #90-374 PITT-TECH	1 COAT PRIMER, 2 COATS GLOSS

ACCESSORIES

PROVIDE BLOCKING FOR ALL FIXTURES AND ACCESSORIES AND MOUNT WITH VANDAL RESISTANT SS SCREWS.

DESCRIPTION	QTY	SIZE/STYLE	MANUFACTURER/ITEM #	FINISH/COLOR	NOTES
GRAB BARS	2	42"	BOBRICK B6806-42	S.S.	33" A.F.F. TO CENTER
GRAB BARS	2	48"	BOBRICK B6806-48	S.S.	33" A.F.F. TO CENTER
SIGNS: ADA TACTILE ROOM ID	2	RECTANGULAR 6" x 8"	INTELLICAM	ALUMINUM BLUE	60" TO CENTER
ISA^{3}GEOMETRIC-MENS	1	12" TRIANGLE	INTELLICAM	ALUMINUM BLUE	60" TO CENTER
ISA^{3}GEOMETRIC-WOMENS	1	12" CIRCLE	INTELLICAM	ALUMINUM BLUE	60" TO CENTER
"THIS GATE TO BE LOCKED OPEN..."	2				
TP HOLDERS	6	VANDAL RESISTANT 3-ROLL	NINTH INNING	S.S.	30" A.F.F. TO TOP
TOILET PARTITIONS & DOORS	6	4" CMU PRECISION BLOCK w/ BOBRICK 'FOREST GREEN' PHENOLIC DOORS		PAINT	1 COAT BLOCK FILLER, 2 COATS GLOSS
URINAL SCREENS	1	4" CMU PRECISION BLOCK		PAINT	1 COAT BLOCK FILLER, 2 COATS GLOSS
OPTIONS:					
HAND DRYER	4	REMOTE POWER ELECTRIC	FASTAIRE HD03 (S)	ALUMINUM	39" TO CONTROLS
MIRROR	4	18" x 30"	BOBRICK B-1556	POLY	40" TO BOTTOM
PAPER TOWEL DISPENSER	1	SURFACE MOUNTED	BOBRICK B-262	S.S.	40" TO BOTTOM
SANITARY NAPKIN DISPOSAL	4	SURFACE MOUNTED	BOBRICK B-270	S.S.	40" TO BOTTOM
SOAP DISPENSER	1	SURFACE MOUNTED	BOBRICK B-2111	S.S.	39" TO CONTROLS
SOAP DISPENSER	2	REMOTE RESERVOIR	ASI #378 RESERVOIR	S.S.	
THRU WALL VALVE	4	VALVES	ASI #353 THRU WALL VALVES	S.S.	
UTILITY HOOK	6	SURFACE MOUNTED	BOBRICK B-670	S.S.	54" AFF.
OTHER SPECIALTY ITEMS					
AIR CURTAIN	1		FANTECH AC3600		SUPPLIED BY TPRC, INSTALLED BY BLAZER
COUNTERTOPS - IN RESTROOMS	2	20" x 72"	NINTH INNING	S.S.	
COUNTERTOPS - IN CONCESSION	1	L-SHAPED 20" x 282" AND 24" x 136"	NINTH INNING	S.S.	
COUNTERTOPS - OUTSIDE CONC. WINDOWS	1	12" x 184"	NINTH INNING	S.S.	
PANEL BETWEEN LAV & TRIPLE SINK	1	12" x 24"	BOBRICK	BOBRICK PHENOLIC "FOREST GREEN"	
SHELF	1	12"x 48"	RUBBERMAID	WHITE	
TELCO BOARD	1	24" x 48"	BLAZER	PAINTED PLYWOOD WITH EASED EDGES	

NOTES:
1. INTERIOR ELEVATIONS REFLECT ACTUAL DIMENSIONS THAT WILL BE USED. SEE AC SHEET FOR CODE CRITERIA.
2. VERTICAL DIMENSIONS ARE FROM TOP OF FINISHED FLOOR UNLESS NOTED OTHERWISE.
3. ISA: INTERNATIONAL SYMBOL OF ACCESSIBILITY, REQUIRED SIGNAGE FOR ACCESSIBLE RESTROOMS.

APPROVED
by C.M.J. Engineering, Inc. a Department of Housing and Community Development approved third party design approval agency for
MULTI-UNIT MANUFACTURED HOUSING,
COMMERCIAL MODULAR OR SPECIAL PURPOSE
COMMERCIAL MODULAR
These plans have reviewed according to the requirements found in the California Code of Regulations, Title 25, Chapter 2, Subchapter 2. The ... shall is solely responsible for compliance with all applicable laws and regulations. Plan reviews by C.M.J. Engineering, Inc. are not a comprehensive analysis of the design and are not provided with any expressed or implied warranties.
APPROVED MAR 1 2 2007
Plan Approval No. CMJ- FP126
EXPIRES JUN 3 0 2008

DATE	REVISION	BY

Blazer INDUSTRIES, INC.
P.O. BOX 489 ■ AUMSVILLE, OR 97325-0489

COPYRIGHT 2007, BLAZER INDUSTRIES, INC. THIS MATERIAL IS THE EXCLUSIVE PROPERTY OF BLAZER INDUSTRIES, INC. AND SHALL NOT BE REPRODUCED, USED, OR DISCLOSED TO OTHERS EXCEPT AS AUTHORIZED BY THE WRITTEN PERMISSION OF BLAZER INDUSTRIES.

RESTROOM DESIGNER:
THE PUBLIC RESTROOM CO.
639 Isbell Road, Suite 440, Reno, NV 89509
1-888-888-2060
www.restroomdesign.com

PROJECT ARCHITECT:

PROJECT OWNER:
CITY OF RIVERSIDE
RIVERSIDE, CALIFORNIA

PROJECT NAME & LOCATION:
REID PARK
RIVERSIDE, CALIFORNIA

SHEET TITLE:
INTERIOR FINISH SCHEDULES

Approved for Const:
File Copy:
Drawn By: TJI
Start Date: 1-15-07
Job No: 15620-22
A-3.0

R:\ADT 2006 Drawings\Restroom Buildings\15620-22 Reid Park\Reid Park_rev0.dwg, A-3.0 Int Sch, 2/9/2007 11:04:10 AM

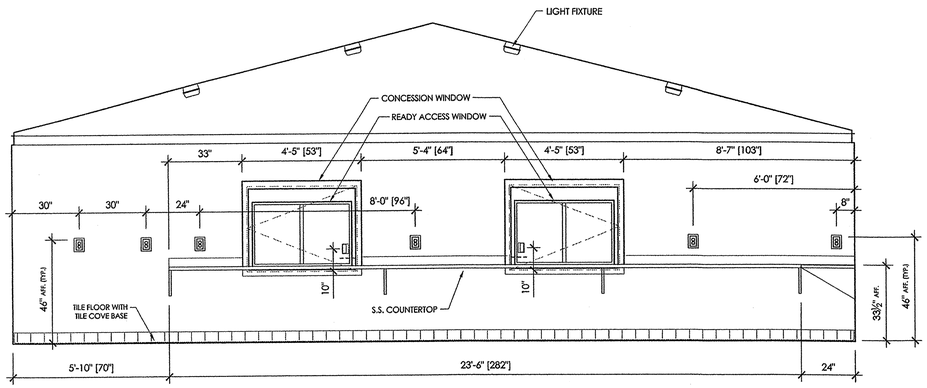

A CONCESSION ELEVATION

3/8" = 1'-0"

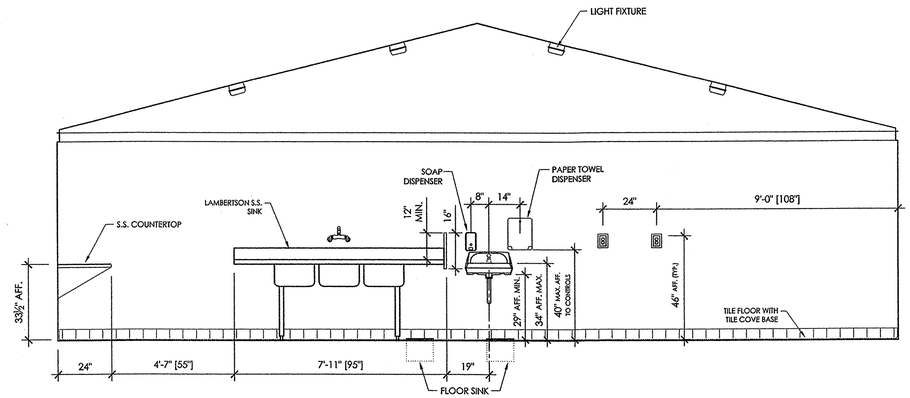

B CONCESSION ELEVATION

3/8" = 1'-0"

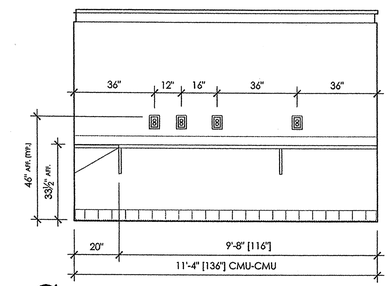

C CONCESSION ELEVATION

3/8" = 1'-0"

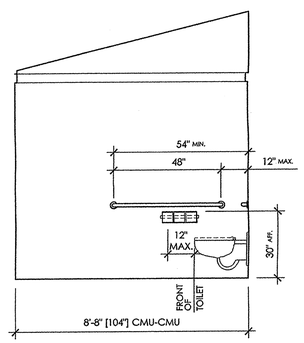

D RESTROOM ELEVATION

3/8" = 1'-0"

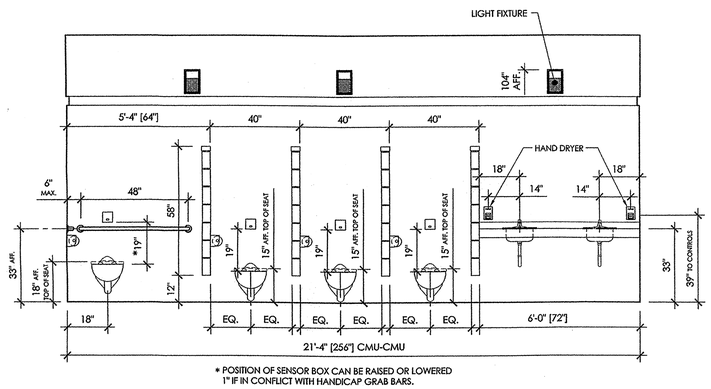

* POSITION OF SENSOR BOX CAN BE RAISED OR LOWERED 1" IF IN CONFLICT WITH HANDICAP GRAB BARS.

E RESTROOM ELEVATION

3/8" = 1'-0"

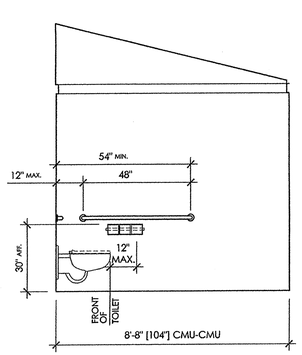

F RESTROOM ELEVATION

3/8" = 1'-0"

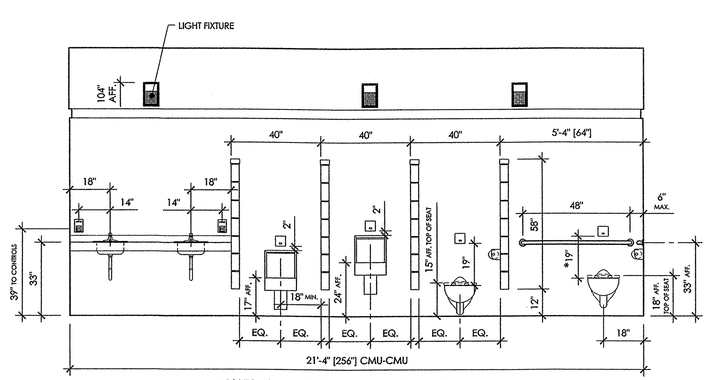

* POSITION OF SENSOR BOX CAN BE RAISED OR LOWERED 1" IF IN CONFLICT WITH HANDICAP GRAB BARS.

G RESTROOM ELEVATION

3/8" = 1'-0"

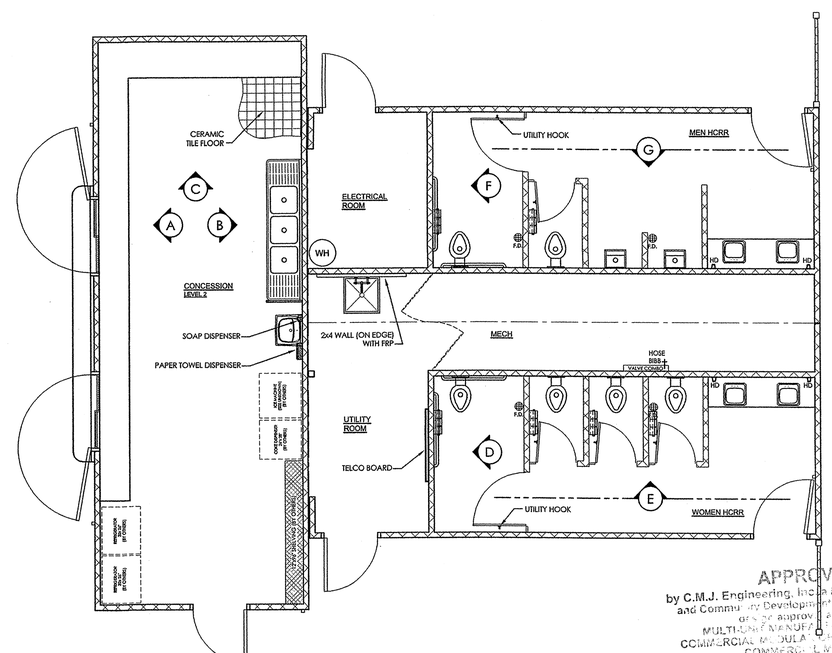

INTERIOR LAYOUT

1/4" = 1'-0"

APPROVED
by C.M.J. Engineering, Inc. a Department of Housing and Community Development approved third party agency for
MULTI-UNIT MANUFACTURED HOUSING,
COMMERCIAL MODULAR, SPECIAL PURPOSE
COMMERCIAL MODULAR
These plans have received approval to the requirements found in the California Code of Regulations Title 25, Chapter 3, Subchapter ... filing ... clients to satisfy responsible for compliance with all applicable ... and regulations. Plan reviews by C.M.J. Engineering, Inc. are not a comprehensive analysis of the design and are not provided with any expressed or implied warranties.
MAR 1 2 2007
APPROVED
Plan Approval No. CMJ- FP126
EXPIRES JUN 3 0 2008

DATE	REVISION	BY

Blazer INDUSTRIES, INC.
P.O. BOX 489 ■ AUMSVILLE, OR 97325-0489

COPYRIGHT 2007, BLAZER INDUSTRIES, INC. THIS MATERIAL IS THE EXCLUSIVE PROPERTY OF BLAZER INDUSTRIES, INC. AND SHALL NOT BE REPRODUCED, USED, OR DISCLOSED TO OTHERS EXCEPT AS AUTHORIZED BY THE WRITTEN PERMISSION OF BLAZER INDUSTRIES.

RESTROOM DESIGNER:
THE PUBLIC RESTROOM CO.
639 Isbell Road, Suite 440, Reno, NV 89509
1-888-888-2060
www.restroomdesign.com

PROJECT ARCHITECT:

PROJECT OWNER:
CITY OF RIVERSIDE
RIVERSIDE, CALIFORNIA

PROJECT NAME & LOCATION:
REID PARK
RIVERSIDE, CALIFORNIA

SHEET TITLE:
INTERIOR ELEVATIONS

Approved for Const:	
File Copy:	
Drawn By:	TJI
Start Date:	1-15-07
Job No:	15620-22

A-3.1

R:\ADT 2006 Drawings\Restroom Buildings\15620-22 Reid Park\Reid Park_rev0.dwg, A-3.1 Int Views, 2/9/2007 11:04:14 AM

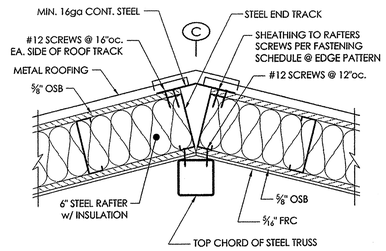

1 RIDGE DETAIL - MOD 'A'

1 1/2" = 12"

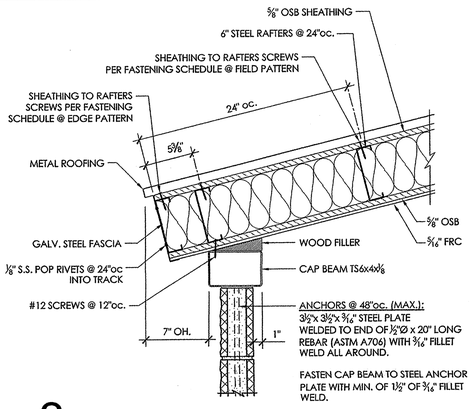

2 EAVE DETAIL - MOD 'A'

1 1/2" = 12"

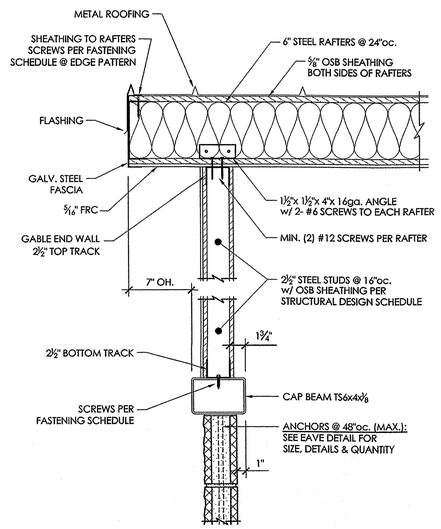

5 GABLE END - MOD 'A'

1 1/2" = 12"

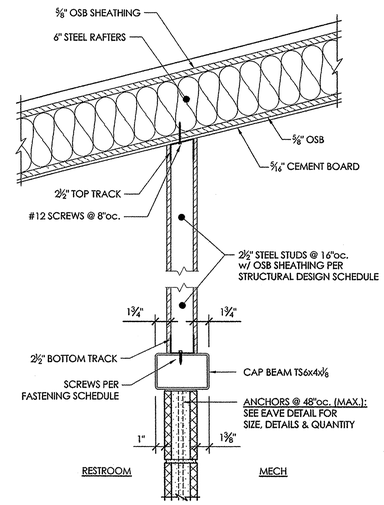

7 INTERIOR WALL DETAIL

1 1/2" = 12"

FASTENING SCHEDULE

STEEL FRAMED WALLS	
STEEL STUD -TO- TOP & BOTTOM TRACK	(2) #6 WAFERHEAD SCREWS (1 EACH SIDE)
SHEATHING -TO- INTERIOR FRAMING	AEROSMITH 0.100" DIA. PINS or #8 SCREWS @ 6"oc EDGE, 12"oc FIELD
GABLE END WALLS (BOTH SIDES)	#8 MIN. SCREWS @ 6"oc EDGE, 12"oc FIELD
BOTTOM TRACK -TO- CAP BEAM	#12 SCREWS @ 8"oc
ROOF	
STEEL RAFTERS -TO- TOP & BOTTOM TRACK	(2) #6 WAFERHEAD SCREWS (1 EACH SIDE)
SHEATHING -TO- STEEL RAFTER	FASTEN 15/32" RATED SHEATHING (40/20) TO STEEL RAFTERS WITH #8 SCREWS @ 6" EDGE, 12" FIELD.

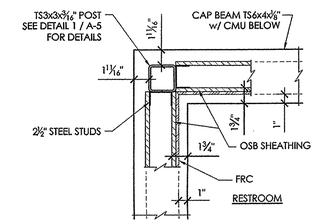

9 INTERIOR POST DETAIL

1 1/2" = 12"

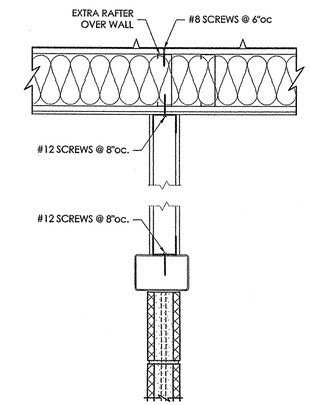

10 INTERIOR WALL DETAIL

1 1/2" = 12"

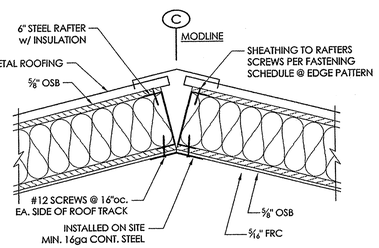

3 RIDGE DETAIL - MODS 'B' & 'C'

1 1/2" = 12"

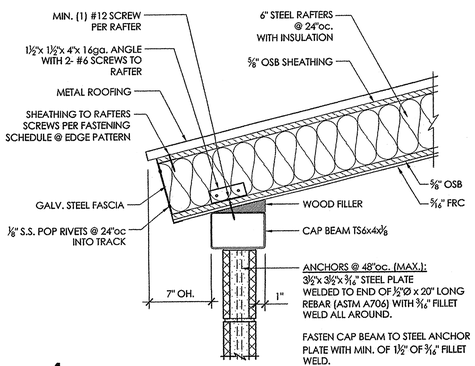

4 EAVE DETAIL - MODS 'B' & 'C'

1 1/2" = 12"

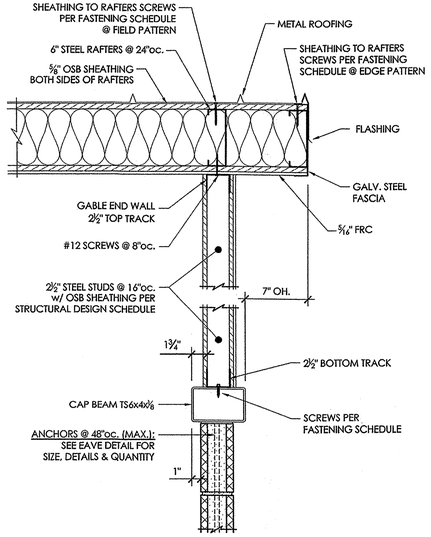

6 GABLE END - MODS 'B' & 'C'

1 1/2" = 12"

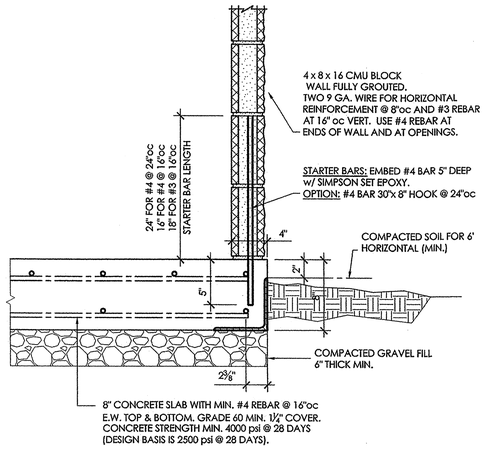

8 FLOOR SLAB DETAIL

1 1/2" = 12"

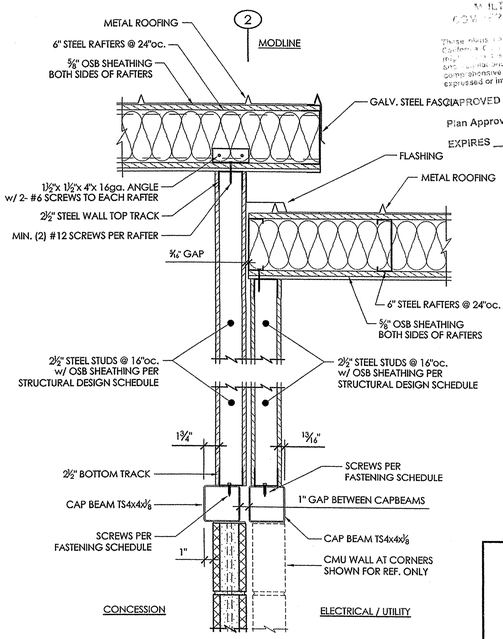

11 INTERIOR WALL DETAIL

1 1/2" = 12"

APPROVED
by C.M.J. Engineering, Inc. a Department of Hous and Community Development approved third part agency for
MAY 1 9 2007
Plan Approval No. CMJ-
EXPIRES JUN 3 0 2008

REGISTERED PROFESSIONAL ENGINEER ROCK M. SHETLER 59228 CIVIL STATE OF CALIFORNIA
2-9-07
EXPIRES: 6/30/2007

DATE	REVISION	BY

Blazer INDUSTRIES, INC. P.O. BOX 489 ■ AUMSVILLE, OR 97325-0489

COPYRIGHT 2007, BLAZER INDUSTRIES, INC. THIS MATERIAL IS THE EXCLUSIVE PROPERTY OF BLAZER INDUSTRIES, INC. AND SHALL NOT BE REPRODUCED, USED, OR DISCLOSED TO OTHERS EXCEPT AS AUTHORIZED BY THE WRITTEN PERMISSION OF BLAZER INDUSTRIES.

RESTROOM DESIGNER: **THE PUBLIC RESTROOM CO.** 639 Isbell Road, Suite 440, Reno, NV 89509 1-888-888-2060 www.restroomdesign.com

PROJECT ARCHITECT:

PROJECT OWNER: **CITY OF RIVERSIDE RIVERSIDE, CALIFORNIA**

PROJECT NAME & LOCATION: **REID PARK RIVERSIDE, CALIFORNIA**

SHEET TITLE: **DETAILS**

Approved for Const:	
File Copy:	
Drawn By:	TJI
Start Date:	1-15-07
Job No:	15620-22

A-4

R:\ADT 2006 Drawings\Restroom Buildings\15620-22 Reid Park\Reid Park_rev0.dwg, A-4Det, 2/9/2007 11:04:17 AM

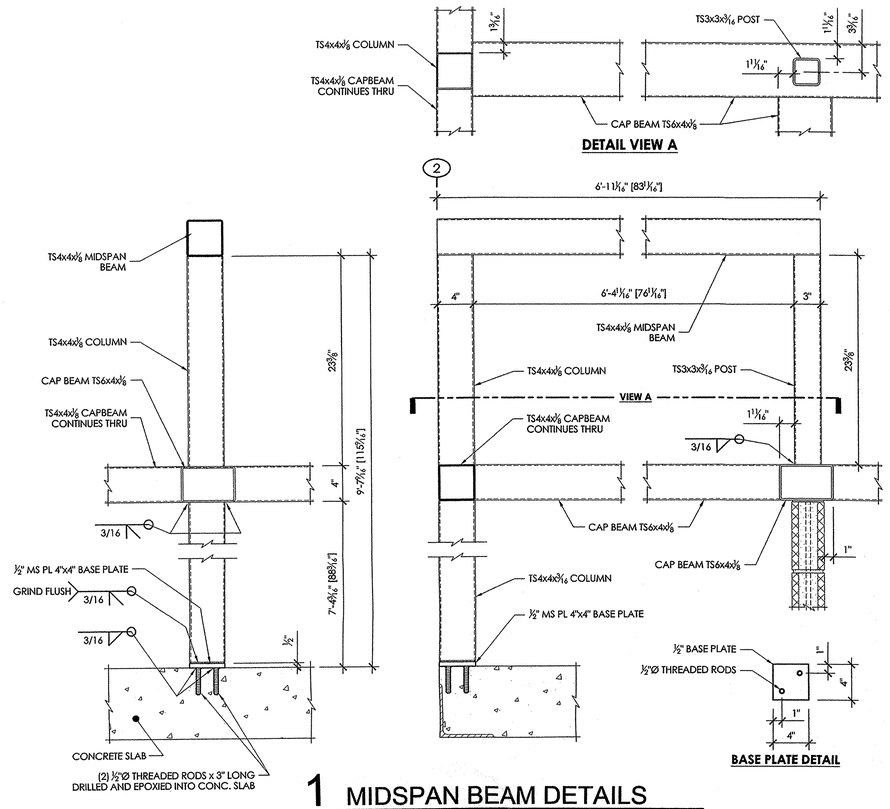

1 MIDSPAN BEAM DETAILS

1 1/2" = 12"

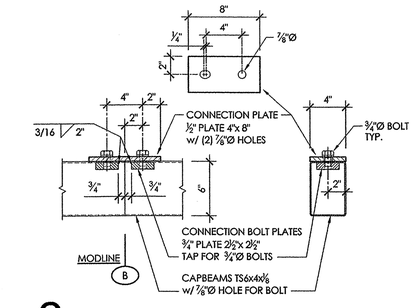

2 CAP BEAM CONNECTION

1 1/2" = 12"

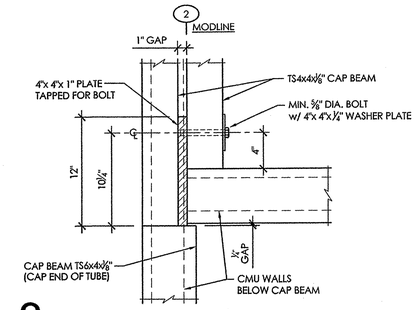

3 CAP BEAM CONNECTION

1 1/2" = 12"

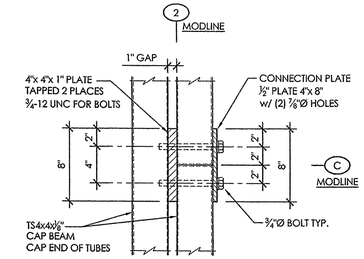

4 CAP BEAM CONNECTION

1 1/2" = 12"

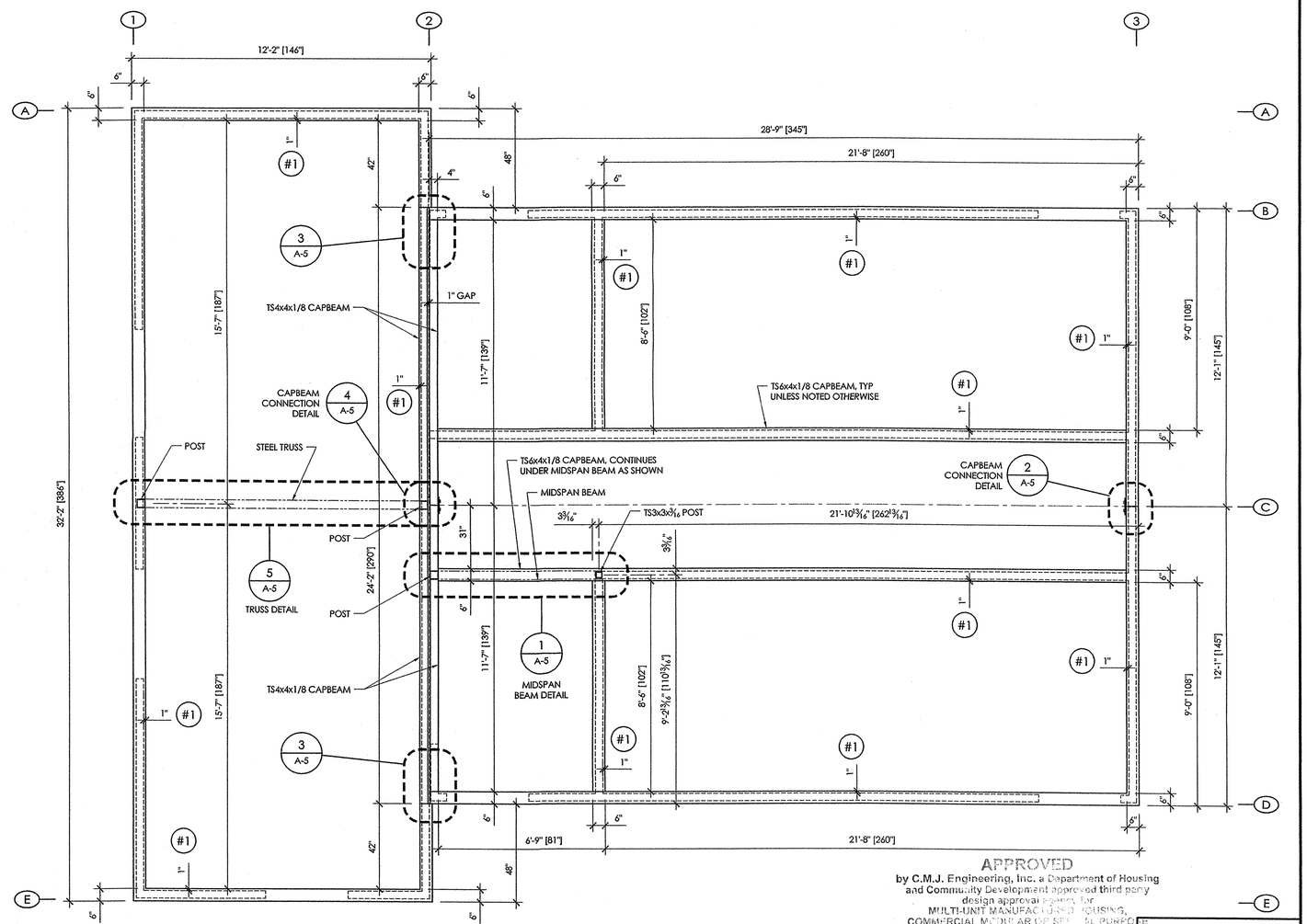

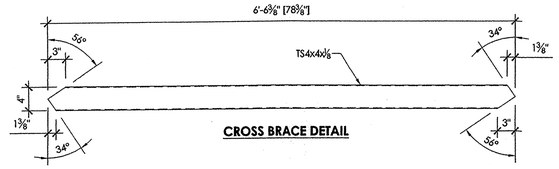

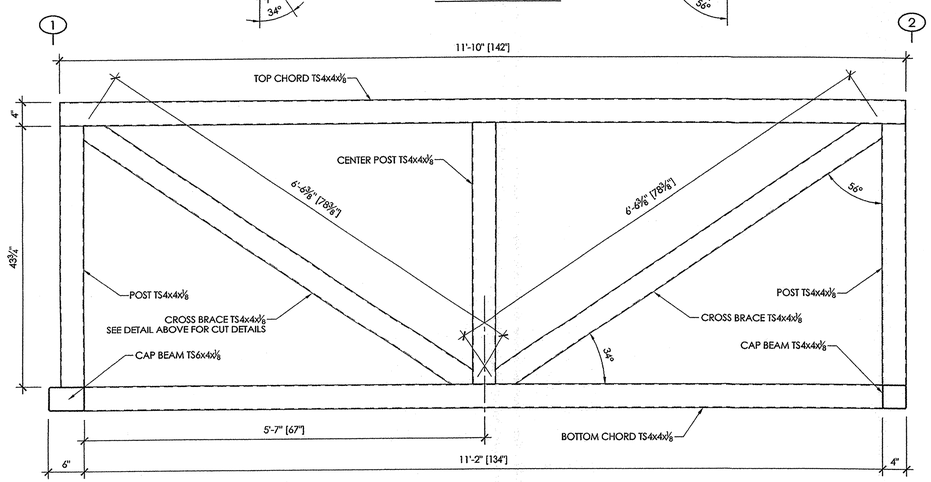

5 TRUSS DETAIL - MOD 'A'

1" = 12"

NOTES:

(#1) THIS DIMENSION IS FOR REFERENCE ONLY AND IS FROM THE INSIDE OF THE CAP BEAM TO THE INSIDE OF THE CMU BLOCK WALL.

(#2) ALL WELDS MIN. 3/16" FILLET, UNLESS NOTED OTHERWISE.

CAP BEAM PLAN

3/8" = 1'-0"

APPROVED
by C.M.J. Engineering, Inc. a Department of Housing and Community Development approved third party design approval agency for
MULTI-UNIT MANUFACTURED HOUSING, COMMERCIAL MODULAR OR SPECIAL PURPOSE COMMERCIAL BUILDINGS

These plans have received approval to be in compliance with the requirements found in the California Code of Regulations, Title 25, Chapter 1, Subchapter 1. The design owner is solely responsible for compliance with all applicable laws and regulations. Plan reviews by C.M.J. Engineering, Inc. are not a comprehensive analysis of the design and are not provided with any expressed or implied warranties.

APPROVED MAR 1 2 2007

Plan Approval No. CMJ- FP126

EXPIRES JUN 3 0 2008

REGISTERED PROFESSIONAL ENGINEER ROCK M. SHETLER 59228 CIVIL STATE OF CALIFORNIA 2-9-07 EXPIRES: 6/30/2007

DATE	REVISION	BY

Blazer INDUSTRIES, INC. P.O. BOX 489 ■ AUMSVILLE, OR 97325-0489

COPYRIGHT 2007, BLAZER INDUSTRIES, INC. THIS MATERIAL IS THE EXCLUSIVE PROPERTY OF BLAZER INDUSTRIES, INC. AND SHALL NOT BE REPRODUCED, USED, OR DISCLOSED TO OTHERS EXCEPT AS AUTHORIZED BY THE WRITTEN PERMISSION OF BLAZER INDUSTRIES.

RESTROOM DESIGNER: **THE PUBLIC RESTROOM CO.** 639 Isbell Road, Suite 440, Reno, NV 89509 1-888-888-2060 www.restroomdesign.com

PROJECT ARCHITECT:

PROJECT OWNER: **CITY OF RIVERSIDE RIVERSIDE, CALIFORNIA**

PROJECT NAME & LOCATION: **REID PARK RIVERSIDE, CALIFORNIA**

SHEET TITLE: **CAP BEAM DETAILS**

Approved for Const:
File Copy:
Drawn By: TJI
Start Date: 1-15-07
Job No: 15620-22

A-5

R:\ADT 2006 Drawings\Restroom Buildings\15620-22 Reid Park\Reid Park_rev0.dwg, A-5 Capbeam, 2/9/2007 11:04:22 AM

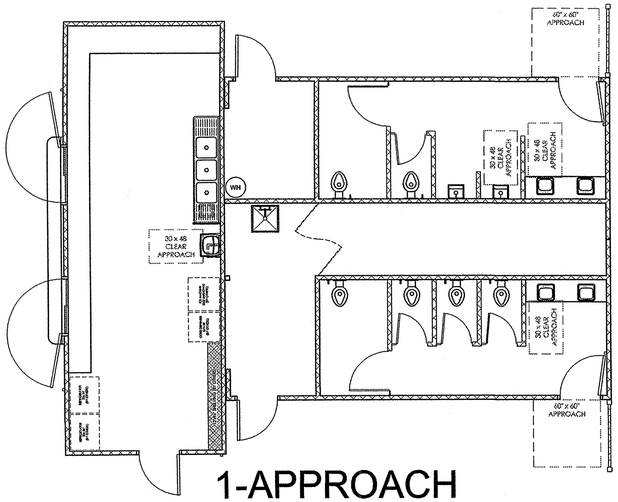

1-APPROACH

NOT TO SCALE

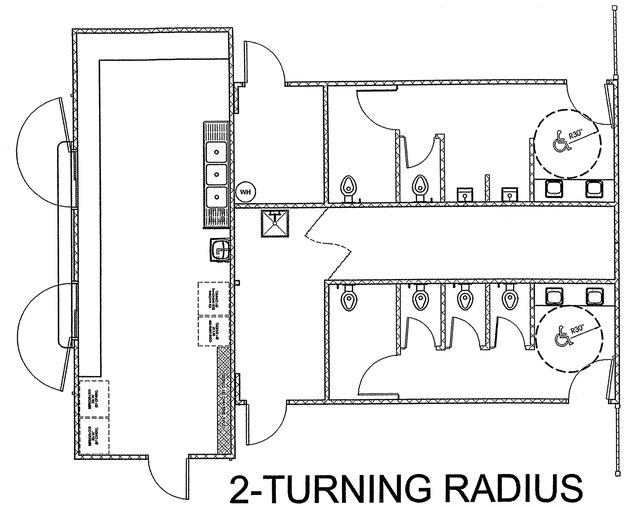

2-TURNING RADIUS

NOT TO SCALE

CALIFORNIA ACCESSIBILITY STANDARDS

(SHOWING MINIMUMS & MAXIMUMS)

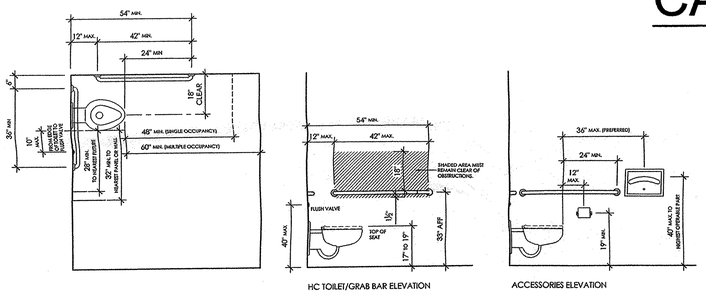

HC TOILET/GRAB BAR ELEVATION

ACCESSORIES ELEVATION

	CODE SUMMARY HEIGHT AFF/LOC	PUBLIC RESTROOM COMPANY STANDARDS
GRAB BARS	33"	PER CODE
TOILET/SEAT	19" MAX. / 17" MIN.	18" TO TOP OF SEAT
TOILET FLUSH VALVE	40" MAX., 10" TO WIDE SIDE	CENTERLINES TO BE 28" AFF AND 10" FROM EDGE OF WC
TP DISPENSER	CENTERLINES TO BE 19" MIN. AFF AND 12" MAX. FROM FRONT OF WC.	12" IN FRONT OF TOILET TO CENTERLINE OF FRONT ROLL AND 30" TO TOP.

NOTE: SPACE BETWEEN GRAB BAR AND WALL TO BE 1 1/2" CLEAR.
GRAB BAR DIAMETER TO BE 1 1/4" to 1 1/2".
GRAB BAR MUST BE ABLE TO SUPPORT 250 lb POINT LOAD AND NOT ROTATE WITHIN THE FITTINGS.

3-TOILET DESIGN CRITERIA: CAL. TITLE 24, DSA 2003

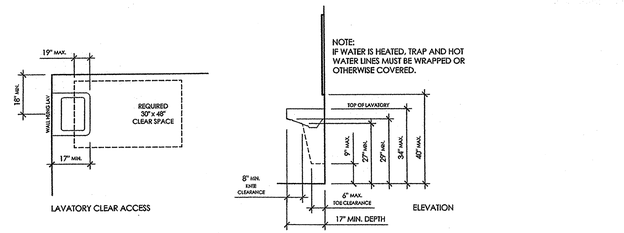

LAVATORY CLEAR ACCESS

ELEVATION

	CODE SUMMARY HEIGHT AFF/LOC	PUBLIC RESTROOM COMPANY STANDARDS
RIM HEIGHT (TOP OF LAV)	34" MAX	33" PREFERRED BUT MUST HAVE MIN. 29" KNEE SPACE
HEIGHT OF KNEE SPACE	29" MIN. AT FRONT APRON 27" MIN. AT 8" IN FROM FRONT	PER CODE
FRONT LAV TO TRAP	8" MIN	PER CODE
TOE SPACE UNDER TRAP	9" MIN	PER CODE
CONTROLS	DECK MT AT 34" MAX	33" PREFERRED
CLEAR SPACE	30" x 48"	PER CODE

4-LAVATORY DESIGN CRITERIA: CAL. TITLE 24, DSA 2003

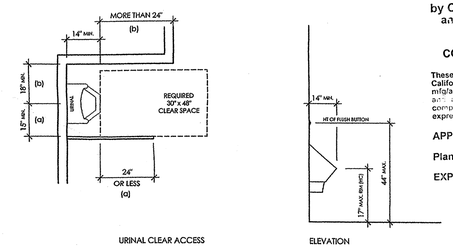

URINAL CLEAR ACCESS

ELEVATION

	CODE SUMMARY	PUBLIC RESTROOM COMPANY STANDARDS
URINAL RIM	17" MAX / 14" MIN AFF	16" AFF
CONTROLS	44" MAX AFF	10" NOM. ABOVE TOP OF URINAL
URINAL SCREENS (a)	15" MIN. CLEARANCE FROM CENTERLINE OF URINAL TO WALL OR PARTITION PROJECTING OUT 24" OR LESS FROM THE FRONT EDGE OF THE 30" x 48" CLEAR SPACE.	PER CODE
(b)	18" MIN. CLEARANCE FROM CENTERLINE OF URINAL TO WALL OR PARTITION PROJECTING OUT MORE THAN 24" FROM THE FRONT EDGE OF THE 30" x 48" CLEAR SPACE.	

5-URINAL DESIGN CRITERIA: CAL. TITLE 24, DSA 2003

APPROVED
by C.M.J. Engineering, Inc. a Department of Housing and Community Development approved third party design approval agency for
MULTI-UNIT MANUFACTURED HOUSING,
COMMERCIAL MODULAR OR SPECIAL PURPOSE
COMMERCIAL MODULAR
These plans have reviewed according to the requirements found in the California Code of Regulations Title 25, Chapter 3, Subchapter 2. The manufacturer/applicant is solely responsible for compliance with all applicable laws and regulations. Plan reviews by C.M.J. Engineering, Inc. are not a comprehensive analysis of the design and are not provided with any expressed or implied warranties.

APPROVED MAR 1 2 2007
Plan Approval No. CMJ- PP126
EXPIRES JUN 3 0 2008

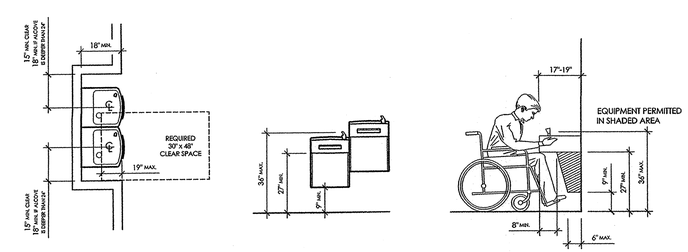

	CODE SUMMARY HEIGHT AFF/LOC
TOP OF BUBBLER OUTLET	36" MAX
KNEE CLEARANCE	27" MIN
TOE CLEARANCE	9" MIN
APPROACH	30" x 48"

NOTE: D.F. ACTIVATOR TO BE WITHIN 6" OF FRONT EDGE OF D.F.

6-DRINKING FOUNTAIN: CAL. TITLE 24, DSA 2003

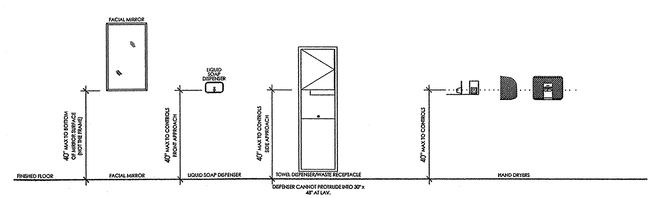

7-ACCESSORIES MOUNTING HEIGHT: CAL. TITLE 24, DSA 2003

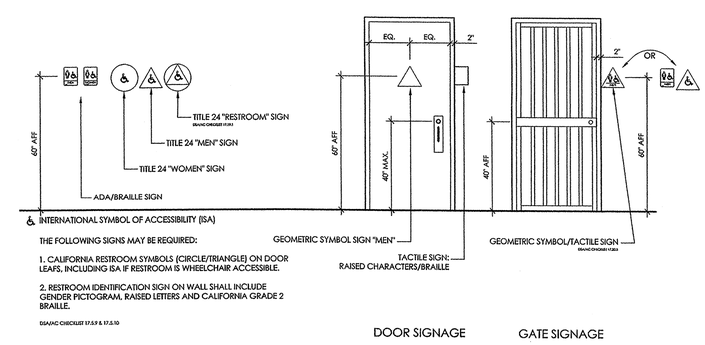

8-RESTROOM SIGNS AT DOORS AND GATES: CAL. TITLE 24, DSA 2003

DATE	REVISION	BY

Blazer INDUSTRIES, INC.
P.O. BOX 489 ■ AUMSVILLE, OR 97325-0489

COPYRIGHT 2007, BLAZER INDUSTRIES, INC. THIS MATERIAL IS THE EXCLUSIVE PROPERTY OF BLAZER INDUSTRIES, INC. AND SHALL NOT BE REPRODUCED, USED, OR DISCLOSED TO OTHERS EXCEPT AS AUTHORIZED BY THE WRITTEN PERMISSION OF BLAZER INDUSTRIES.

RESTROOM DESIGNER:
THE PUBLIC RESTROOM CO.
639 Isbell Road, Suite 440, Reno, NV 89509
1-888-888-2060
www.restroomdesign.com

PROJECT ARCHITECT:

PROJECT OWNER:
CITY OF RIVERSIDE
RIVERSIDE, CALIFORNIA

PROJECT NAME & LOCATION:
REID PARK
RIVERSIDE, CALIFORNIA

SHEET TITLE:
ACCESSIBILITY

Approved for Const:
File Copy:
Drawn By: TJI
Start Date: 1-15-07
Job No: 15620-22

AC

R:\ADT 2006 Drawings\Restroom Buildings\15620-22 Reid Park\Reid Park_rev0.dwg, AC, 2/9/2007 11:03:57 AM

ELECTRICAL FIXTURE/EQUIPMENT SCHEDULE & SYMBOLS

SYMBOL	QTY	RATING	CALC. LOAD	DESCRIPTION	MODEL	HEIGHT TO TOP	COMMENTS
PANEL	1	200 AMP MAIN BREAKER		120/240 SINGLE PHASE WITH BOLT-ON BREAKERS EMT IN EXPOSED LOCATIONS, MC CABLE IN WALLS	SQUARE D NQOD142M200	72"	
HAND DRYER	4	840 W	840 V.A. EACH	REMOTE POWER ELECTRIC	FASTAIRE HD03	39" TO CONTROLS	
LIGHT-CONCESSION	4	62 W	62 V.A.	4' - 2 LAMP - DIFFUSED FLUORESCENT - WET LOCATION	LITHONIA DMW232-120	ON CEILING	
LIGHT-ELECTRICAL / STORAGE	3	62 W	62 V.A.	4' - 2 LAMP - DIFFUSED FLUORESCENT	LITHONIA LB232-120		
LIGHT-EXTERIOR 70	6	252 W	252 V.A.	HPS FIXTURE	LITHONIA #TWL 70S	120"	
LIGHT-MECHANICAL 100	2	100 W	100 V.A.	INCANDESCENT FIXTURE	KILLARK VFBG-110		
LIGHT-RESTROOMS 50	6	216 W	216 V.A.	HPS FIXTURE	LITHONIA #TWL 50S	102"	
PHOTOCELL	1	1800 V.A. RATED			INTERMATIC K4121M	ON ROOF	
RECEPTACLE DC GFCI	7		1500 V.A., DEDICATED CIRCUIT	GROUND FAULT RECEPTACLE	LEVITON 8899-I	48"	
RECEPTACLE DC	9		1500 V.A., DEDICATED CIRCUIT	RECEPTACLE	LEVITON CR20-I	48"	
SWITCH	6	1440 V.A. MAX LIMIT PER SWITCH		SINGLE POLE SWITCH	LEVITON 1221-I	48"	
TIMECLOCK TC	1	5 V.A.			INTERMATIC T101		
UTILITY BOX E	1				CHRISTY		
WIRE FOR WATER HEATER WH	1	11000 W	11000 V.A.	50 GALLON	50 GALLON BRADFORD WHITE		
WIRE FOR AND INSTALL AIR CURTAIN	1	144 W	144 V.A.		FANTECH AC3600		SUPPLIED BY TPRC
240 VOLT DEDICATED CIRCUIT - FUTURE USE	1	1440 W	1440 V.A.				6.0 AMPS @ 240 VOLT

ONE-LINE-DIAGRAM
200 AMP PANEL
MAIN BREAKER
120 / 240 1Ø
UFER GROUND REQUIRED

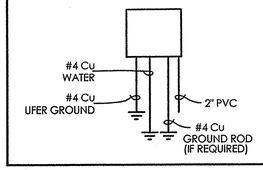

NOTES:

1. SOLID COPPER ONLY.
2. ALL CONDUCTORS ARE COPPER; TYPE THHN.
3. RATING OF STANDARD PANEL IS 22,000 A.I.C.
4. WIRING METHOD IN METALLIC CONDUIT.
5. INSTALL UFER GROUND IN SLAB, TERMINATING IN MECH.

PANEL SCHEDULE

NOTE: ALL CONDUCTORS COPPER. AMP PANEL SINGLE PHASE

CKT NO.	DESCRIPTION	TRIP AMPS	WIRE SIZE	VOLT AMPS	A	B	VOLT AMPS	WIRE SIZE	TRIP AMPS	DESCRIPTION	CKT NO.
1	240 VOLT DED. CIR.	20	12	720			5500	6	60	WATER HEATER	2
3	" " " "	/	/	720			5500	/	/	" "	4
5	DED. 20 AMP RECEP.	20	12	1500			840	12	20	HAND DRYERS	6
7	DED. 20 AMP RECEP.	20	12	1500			840	12	20	HAND DRYERS	8
9	DED. 20 AMP RECEP.	20	12	1500			840	12	20	HAND DRYERS	10
11	DED. 20 AMP RECEP.	20	12	1500			840	12	20	HAND DRYERS	12
13	DED. 20 AMP RECEP.	20	12	1500			386	12	20	MECH/ELEC/UTIL LTS.	14
15	DED. 20 AMP RECEP.	20	12	1500			392	12	20	CONCESS LTS. + CUR.	16
17	DED. 20 AMP RECEP.	20	12	1500			1296	12	20	RESTROOM LTS.	18
19	DED. 20 AMP RECEP.	20	12	1500			1512	12	20	EXTERIOR LTS.	20
21	DED. 20 AMP RECEP.	20	12	1500							22
23	DED. 20 AMP GFCI	20	12	1500							24
25	DED. 20 AMP GFCI	20	12	1500							26
27	DED. 20 AMP GFCI	20	12	1500							28
29	DED. 20 AMP GFCI	20	12	1500							30
31	DED. 20 AMP GFCI	20	12	1500							32
33	DED. 20 AMP GFCI	20	12	1500							34
35	DED. 20 AMP GFCI	20	12	1500							36
37											38
39											40
41											42

ELECTRICAL PLAN REVIEW LOAD CALCULATIONS

VOLTAGE: 120/240 PHASE: 1Ø

	CONNECTED LOAD					CALC. LOAD
LIGHTING						
EXTERIOR	1512	V.A.	X 125	%	=	1890 V.A.
INTERIOR	1930	V.A.	X 125	%	=	2413 V.A.
EXIT		V.A.	X 125	%	=	V.A.
EMERGENCY		V.A.	X 125	%	=	V.A.
		V.A.	X 125	%	=	V.A.
EXHAUST FANS		V.A.	X 125	%	=	V.A.
RECEPTACLES						
THRU 10,000		V.A.	X 100	%	=	V.A.
OVER 10,000		V.A.	X 50	%	=	V.A.
		V.A.	X 100	%	=	V.A.
		V.A.	X 25	%	=	V.A.
	3360	V.A.	X 100	%	=	3360 V.A.
	13500	V.A.	X 100	%	=	13500 V.A.
	10500	V.A.	X 100	%	=	10500 V.A.
	11000	V.A.	X 100	%	=	11000 V.A.
	1440	V.A.	X	%	=	1440 V.A.
	144	V.A.	X	%	=	144 V.A.
		V.A.	X	%	=	V.A.
TOTAL KVA	43.4		TOTAL KVA			44.3
CONNECTED LOAD AMPS	180.8		CALCULATED LOAD AMPS			184.4

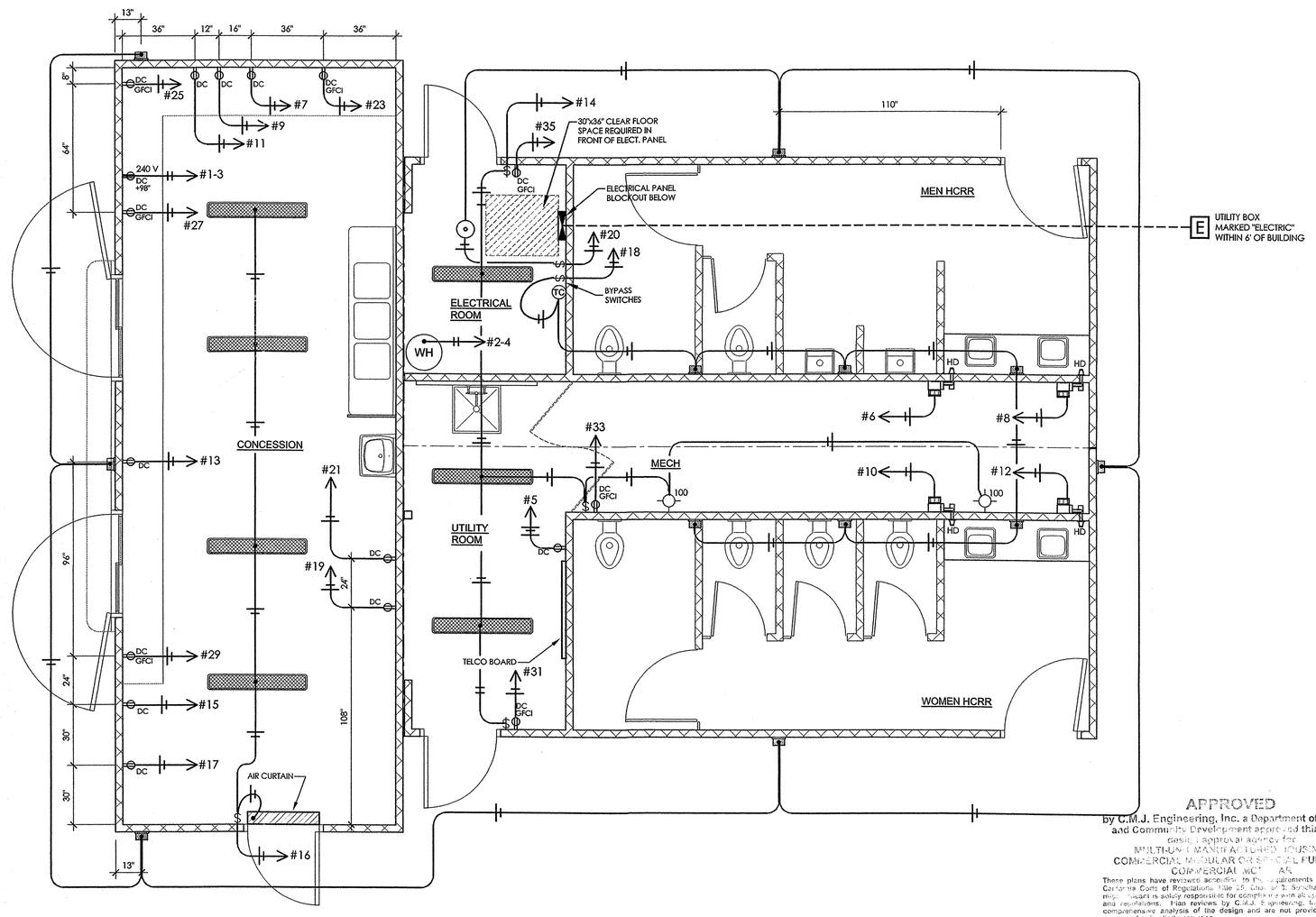

ELECTRICAL PLAN

3/8" = 1'-0" L.L.J.

APPROVED
by C.M.J. Engineering, Inc. a Department of Housing and Community Development approved third party basic approval agency for
MULTI-UNIT MANUFACTURED HOUSING,
COMMERCIAL MODULAR OR SPECIAL PURPOSE
COMMERCIAL MOTEL AS
These plans have reviewed accepted to the requirements found in the California Code of Regulations Title 25, Chapter 1, Subchapter 2. The owner/builder is solely responsible for complying with all applicable laws and regulations. Plan reviews by C.M.J. Engineering, Inc. are not a comprehensive analysis of the design and are not provided with any expressed or implied warranties.

APPROVED MAR 1 2 2007
Plan Approval No. CMJ- PR126
EXPIRES JUN 3 0 2008

DATE	REVISION	BY

Blazer INDUSTRIES, INC. P.O. BOX 489 ■ AUMSVILLE, OR 97325-0489

COPYRIGHT 2007, BLAZER INDUSTRIES, INC. THIS MATERIAL IS THE EXCLUSIVE PROPERTY OF BLAZER INDUSTRIES, INC. AND SHALL NOT BE REPRODUCED, USED, OR DISCLOSED TO OTHERS EXCEPT AS AUTHORIZED BY THE WRITTEN PERMISSION OF BLAZER INDUSTRIES.

RESTROOM DESIGNER:
THE PUBLIC RESTROOM CO.
639 Isbell Road, Suite 440, Reno, NV 89509
1-888-888-2060
www.restroomdesign.com

PROJECT ARCHITECT:

PROJECT OWNER:
CITY OF RIVERSIDE
RIVERSIDE, CALIFORNIA

PROJECT NAME & LOCATION:
REID PARK
RIVERSIDE, CALIFORNIA

SHEET TITLE:
ELECTRICAL PLAN

Approved for Const:
File Copy:
Drawn By: TJI
Start Date: 1-15-07
Job No: 15620-22

E-1

R:\ADT 2006 Drawings\Restroom Buildings\15620-22 Reid Park\Reid Park_rev0.dwg, E-1, 2/9/2007 11:04:26 AM