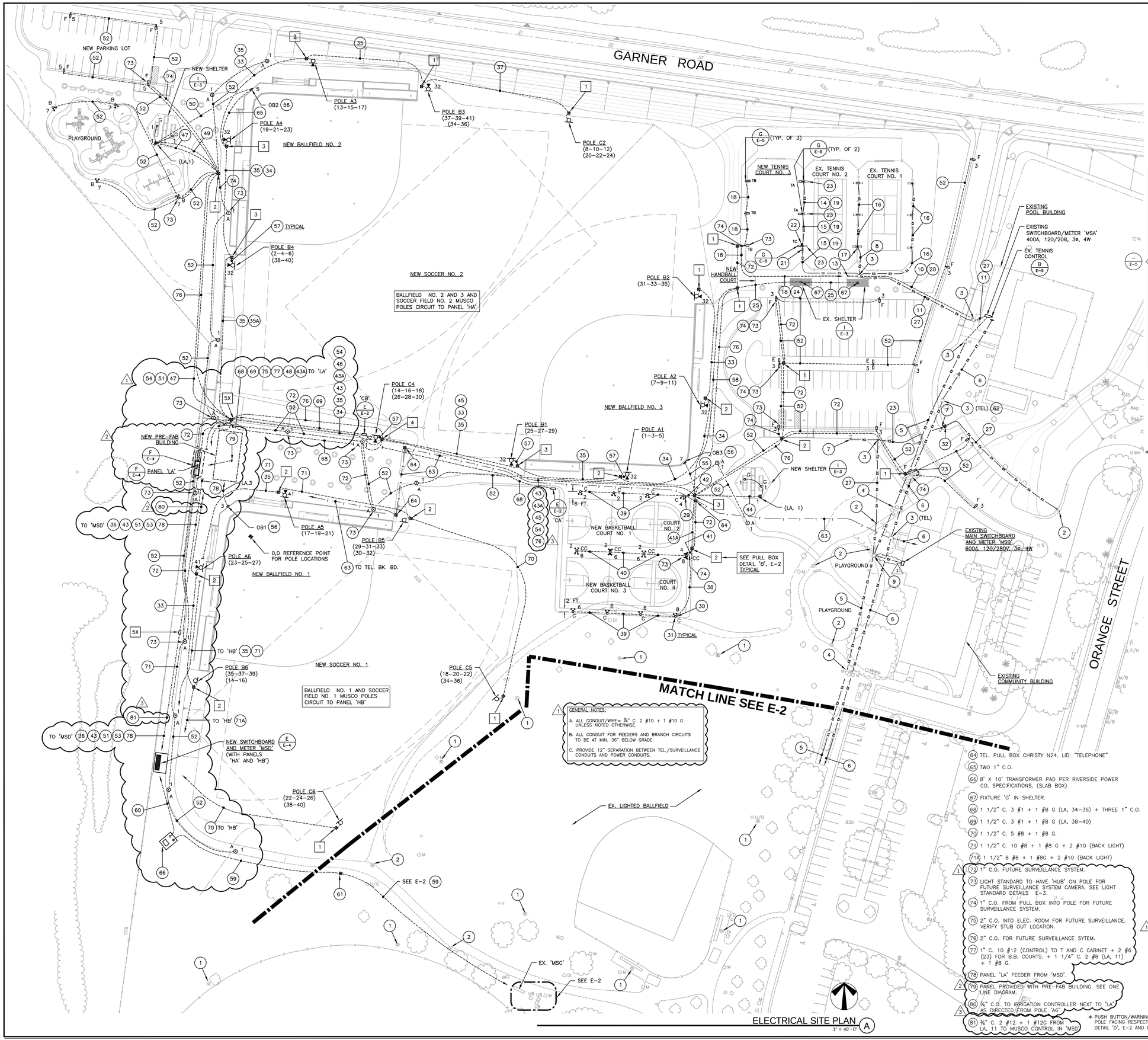

GENERAL NOTES:

A. ALL CONDUIT/WIRE= ¾" C. 2 #10 + 1 #10 G UNLESS NOTED OTHERWISE.

B. ALL CONDUIT FOR FEEDERS AND BRANCH CIRCUITS TO BE AT MIN. 36" BELOW GRADE.

C. PROVIDE 12" SEPARATION BETWEEN TEL./SURVEILLANCE CONDUITS AND POWER CONDUITS.

ELECTRICAL SITE PLAN (A)
1" = 40'-0"

PLAN NOTES:

1. EXISTING BALLFIELD LIGHT STANDARD TO REMAIN. SEE E-2.
2. EXISTING WALKWAY LIGHT STANDARD TO REMAIN.
3. EX. PULL BOX.
4. EX. PULL BOXES.
5. EX. 4" C. POWER CO. CONDUIT/WIRE (PRIMARY)
6. EX. 2" C. (TEL.) CONDUIT WIRE. COORDINATE WITH CITY FOR CITY TO PROVIDE TEL. WIRE.
7. REMOVE EX. LIGHT STANDARD AND FOUNDATION. DISCONNECT EX. CIRCUIT. CAP OFF CONDUIT.
8. EX. 1 1/2" C. 6 #8, 2 #10 SECURITY, 6 #12 CONTROL + 1 #8G (EX. TENNIS COURTS CIRCUITS)
9. EX. POWER CO. TRANSFORMER PAD.
10. EX. 1 1/2" C.O.
11. EX. 2" C. 9 #8, 2 #10, 9 #12 + 1 #8G.
12. EX. 1 1/2" C. 6 #8, 2 #10, (SECURITY LIGHT), 6 #12 CONTROL + 1 #8G.
13. EX. 1" C.O. STUB OUT.
14. EX. 1" C. 2 #8 + 1 #8G.
15. EX. 1 1/2" C. 3 #8 + 1 #8G, + PULL WIRE.
16. EX. CONDUIT/WIRE TO REMAIN.
17. EX. SECURITY LIGHT.
18. NEW 1" C. 2 #8 + 1 #10G (208V)
19. RE-USE EXISTING CONDUIT, PULL THRU 5 #8 + G.
20. NEW 2 #8 + G (TENNIS LIGHTING) + 5 #12 (CONTROL TO T AND C CABINET) AND CONNECT PER SHT. E-5 TO NEW 40A/2P C.B. AT 'MS' AND CONTROL WIRE TO T AND C SYSTEM.
21. NEW SECURITY LIGHT PER DETAIL 'H', E-5.
22. PUSH BUTTON LIGHT CONTROL-TENNIS COURT NO.3 PER DETAIL 'A', E-3.
23. EXISTING POLE AND LIGHT FIXTURE TO BE REMOVED AND REPLACED WITH NEW MATCHING EXISTING.
24. PICK UP EXISTING STUB OUT PER NOTE 13.
25. 3/4" C. 2 #10 + 1 #10 G (LA, 23)
26. REMOVE EX. LIGHT STANDARD. SAME AS NOTE 7. INTERCEPT EX. CONDUIT/WIRE TO KEEP EXISTING CIRCUIT IN SERVICE.
27. EX. CIRCUIT TO REMAIN IN SERVICE.
28. EX. PULL BOX TO REMAIN.
29. PUSH BUTTON/WARNING LIGHT-COURT NO. 1AND 2.
30. PUSH BUTTON/WARNING LIGHT-COURT NO. 3 AND 4.
31. AIM FIXTURES AS RECOMENDED BY FIXTURE MF'G.
32. INTERCEPT EXISTING CIRCUIT WITH PULL BOX (N9)
33. 1 1/2" C. 3 #8 + 1 #8G + 1 1/2" C.O. + 2 #10 (BACKLIGHT)
34. 1 1/2" C. 6 #8 + 1 #8G + 2 #8 (BACKLIGHT) + 1 1/2" C.O.
35. 1 1/2" C. 11 #8 + 1 #8G + 2 #10 (BACKLIGHT) + 1 1/2" C.O.
35A. 1 1/2" C. 11 #8 + 1 #8 G.
36. 2" C. 11 #6 (8-10-12, 20-22-24, 37-39-41), 34-36 + 1 #8G.
    2" C. 11 #6 (13-15-17, 19-21-23, 2-4-6), 38-40 + 1 #8G
    2" C. 9 #6 (31-33-35, 1-3-5, 25-27-29) + 1 #8G.
    2" C. 6 #6 (14-16-18, 26-28-30) + 2 #10 (32) ALL ABOVE TO PANEL 'HA'.
37. 1 ½" C. 3 #8 + 1 #8 G.
38. 1 1/4" C. 2 #6 (HB,4), 2 #10 (HB,8) + 1 #8G 1" C. 5 #12 (CONTROL)
39. 1" C. 2 #6 + 1 #8G.
40. 1 1/4" C. 4 #6 (HB,2-6) + 1 #8G.
41. 1 1/2" C. 6 #6 (HB,2-4-6-8) + 1 #8G 1 1/2" C. 5 #12 (CONTROL)
41A. 1 1/2" C. 6 #6 (HB,2-4-6-8) + 1 #8G 1" C. 10 #12 (CONTROL)
42. 1 1/4" C. 4 #6 (HB,2-4) + 1 #8G. 1" C. 5 #12 (CONTROL)
43. 1 1/2" C. 6 #6 (HB,2-4-6-8) + 1 #8G.
43A. 1 1/2" C. 15 #12 (CONTROL) TO T AND C CABINET IN ELEC. ROOM FOR B.B. COURTS.
44. ¾" C. 2 #10 + G (LA, 1)
45. 1 1/2" C. 2 #10 (HB,1), 2 #8 + 1 #8G (HB,3), 4 #10 G. (LA,1-7) + 2 #6 (LA, 23) + 1 #8 G (120V)
46. 1" C. 4 #10 (LA,1-7) + 2 #6 (LA, 23) + 1 #8 G.
47. 1" C. 4 #8 + G (LA,1-5)
48. 1 1/2" C. 5 #10 (LA,1-5-7) + 1 #10G.
49. 3/4" C. 2 #10 + G (HB,9)
50. 3/4" C. 2 #10 + G (LA,5)
51. 1 1/2" C. 6 #6 + G (HB,1-5-7-9)
52. 3/4" C. 2 #8 + G.
53. 3-2" C.O. (SPARE) TO 'MSD' (NEAR PANEL 'HB')
54. TWO 1 1/2" C.O. (SPARE)
55. 1" C. 2 #10 (LA,7) + TWO 3/4" C.O.
56. SEE DETAIL 'C', E-2.
57. 1 1/2" C. 3 #6 + G (TO BALLAST) + 2 #10 (32) TO BACK LIGHT.
58. 3/4" C. 2 #8 + 1 #10 G (LA, 23)
59. 2-4" C.O. + 1-2" C.O.
60. 3-5" C.O. TO 'MSD' FROM UTILITY TRANSFORMER
61. PULL BOX PER UTILITY CO. REQUIREMENTS.
62. NEW TEL. CONDUITS PER NOTE 63 TO ENTER EX. TEL. PULL BOX. VERIFY EXACT LOCATION.
63. TWO 2" C.O. (TEL.)
64. TEL. PULL BOX CHRISTY N24, LID: "TELEPHONE"
65. TWO 1" C.O.
66. 8' X 10' TRANSFORMER PAD PER RIVERSIDE POWER CO. SPECIFICATIONS. (SLAB BOX)
67. FIXTURE 'G' IN SHELTER.
68. 1 1/2" C. 3 #1 + 1 #8 G (LA, 34-36) + THREE 1" C.O.
69. 1 1/2" C. 3 #1 + 1 #8 G (LA, 38-40)
70. 1 1/2" C. 5 #8 + 1 #8 G.
71. 1 1/2" C. 10 #8 + 1 #8 G + 2 #10 (BACK LIGHT)
71A. 1 1/2" B #8 + 1 #8G + 2 #10 (BACK LIGHT)
72. 1" C.O. FUTURE SURVEILLANCE SYSTEM.
73. LIGHT STANDARD TO HAVE 'HUB' ON POLE FOR FUTURE SURVEILLANCE SYSTEM CAMERA. SEE LIGHT STANDARD DETAILS E-3.
74. 1" C.O. FROM PULL BOX INTO POLE FOR FUTURE SURVEILLANCE SYSTEM.
75. 2" C.O. INTO ELEC. ROOM FOR FUTURE SURVEILLANCE. VERIFY STUB OUT LOCATION.
76. 2" C.O. FOR FUTURE SURVEILLANCE SYTEM.
77. 1" C. 10 #12 (CONTROL) TO T AND C CABINET + 2 #6 (23) FOR B.B. COURTS. + 1 1/4" C. 2 #8 (LA, 11) + 1 #8 G.
78. PANEL 'LA' FEEDER FROM 'MSD'.
79. PANEL PROVIDED WITH PRE-FAB BUILDING. SEE ONE LINE DIAGRAM.
80. ¾" C.O. TO IRRIGATION CONTROLLER NEXT TO 'LA' AS DIRECTED FROM POLE 'A6'.
81. ¾" C. 2 #12 + 1 #12G FROM LA, 11 TO MUSCO CONTROL IN 'MSD'

* PUSH BUTTON/WARNING LIGHT TO BE ON POLE FACING RESPECTIVE COURT. SEE DETAIL 'D', E-2 AND DETAIL 'D', E-3

REEDCORP ENGINEERING
CONSULTING ELECTRICAL ENGINEERS
2061 Business Center Drive, Suite 110
Irvine, CA 92612
(949) 752-1278 FAX: (949) 752-1287
E-MAIL : ee@reedcorp.net
04-216-1944

RHA LANDSCAPE ARCHITECTS PLANNERS INC
3612 MISSION INN AVE
RIVERSIDE, CALIFORNIA 92501
LIC. #1512
PH. (909) 781-1930
FAX (909) 686-8091

© R.H.A. Landscape Architects - Planners, Inc. expressly reserves its common law copyright and other property rights in these plans, designed by any third party without the express written consent of R.H.A. Landscape Architects - Planners, Inc. These plans are not to be used, reused, or disclosed to any third party without the express written consent of R.H.A. Landscape Architects - Planners, Inc.

CLIENT:
THE CITY OF RIVERSIDE
PARK AND RECREATION DEPT.
3900 Main Street
Riverside, California 92522

PROJECT:
Reid Park Expansion
Community Park
Orange St. and Garner Rd.

REVISIONS	DATE	BY
1 MISC.	1/26/06	RR
2 MISC.	7/18/06	RR
3 MISC.	1/15/07	RR

REGISTERED PROFESSIONAL ENGINEER
THOMAS E. HANTMAN
No. 7531
Exp: 9/30/08
ELECTRICAL
STATE OF CALIFORNIA

SHEET TITLE
ELECTRICAL SITE PLAN

DESIGNED	MR
DRAWN	MR
CHECKED	RR
DATE	01-17-06
SCALE	1"=40'-0"
JOB NO.	

SHEET
E-1
OF 6 SHEETS

Z:\SDSKPROJ\1944\Reid Park\Sheets\E-1 Electrical Site Plan.dwg, E-1 Site Plan, 9/10/2007 12:20:29 PM, marioh, DWF6 ePlot.pc3, Reedcorp Engineering, Inc.

Drawing File: Z:\SDSKPROJ\1944\Reid Park\Sheets\E-1 Electrical Site Plan Sep 10, 2007 - 12:20pm

(One Inch on Original Sheet)

ELECTRICAL SYMBOLS LIST

SYMBOL	DESCRIPTION
(lighting pole symbol) A2	NEW BALLFIED LIGHTING POLE (▶ = BACK AREA LIGHT)
(light standard symbol)	PARKING LOT OR TENNIS COURT LIGHT STANDARD
⦿	WALKWAY LIGHT STANDARD
(lotlight symbol)	BASKET BALL COURT OR TOT LOTLIGHT STANDARD
①	INDICATES PLAN NOTE NUMBER "1", SEE PLAN
A, 1-3 (homerun arrow)	HOMERUN TO PANEL "A", CIRCUITS #1 AND #3
- - - - - - - - -	CONDUIT/WIRE UNDER SLAB OR BELOW GRADE, 3/4" MINIMUM
————	CONDUIT/WIRE CONCEALED ABOVE CEILING OR IN WALLS
—EX— EX —	EXISTING CONDUIT/WIRE UNDER SLAB OR BELOW GRADE
(stub out symbol)	CONDUIT STUB OUT, 3/4" MINIMUM - SEE PLANS FOR NOTES
(J) (flex symbol)	FLEXIBLE CONNECTION
—///—	HASH MARKS INDICATE THREE #12 WIRES IN CONDUIT, EXCEPT NO HASH MARKS DESIGNATE 2 #12 WIRES. 1/2"C. MINIMUM OR AS NOTED
—////—	HASH MARKS INDICATE FOUR #12 WIRES IN CONDUIT. 1/2"C. MINIMUM OR AS NOTED
—/////—	HASH MARKS INDICATE FIVE #12 WIRES IN CONDUIT. 3/4"C. MINIMUM OR AS NOTED
—//////—	HASH MARKS INDICATE SIX #12 WIRES IN CONDUIT. 3/4"C. MINIMUM OR AS NOTED
S	SINGLE POLE SWITCH AT +44" U.O.N.
S3	THREE-WAY SWITCH AT +44" U.O.N.
Sa	"a" INDICATES OUTLET CONTROLLED AT +44" U.O.N. (PROVIDE SEPARATE SWITCH FOR EACH DESIGNATION)
[1]	PULL BOX TYPE PER DETAILS
⊠	PULL BOX FLUSH IN GRADE. CHRISTY N9 OR AS NOTED ON PLANS

CLG.	WALL	FLR.	DESCRIPTION
○	⊢○		INCANDESCENT FIXTURE OUTLET - VERIFY MOUNTING WITH FIXTURE SCHEDULE
(symbol)	(symbol)		SURFACE FLUORESCENT FIXTURE OUTLET - VERIFY MOUNTING WITH FIXTURE SCHEDULE
(symbol)			LAY-IN FLUORESCENT FIXTURE - VERIFY MOUNTING WITH FIXTURE SCHEDULE
⊢○⊣			INDUSTRIAL FLUORESCENT STRIP FIXTURE
□			RECESSED MOUNTED DOWNLIGHT FIXTURE
⊢○—⊢—⊣			CONTINUOUS FLUORESCENT FIXTURE
	◀P	▼	TELEPHONE OUTLET AT +15" WALL MOUNTED, U.O.N.; P = PAYPHONE AT +44" STUB 3/4" C.O. TO ABOVE ACCESSIBLE CEILING FOR ALL OUTLETS
(symbol)	(symbol)	(symbol)	120V DOUBLE DUPLEX 20A RECEPTACLE AT +15" (WALL MOUNTED) U.O.N.
Ⓙ	Ⓙ	Ⓙ	JUNCTION BOX AT +15" (WALL MOUNTED) U.O.N
	(symbol)		SPECIAL PURPOSE RECEPTACLE AT +15" U.O.N. VERIFY AMPERAGE AND VOLTAGE
	(symbol) GFI		GROUND FAULT INTERRUPTING RECEPTACLE AT +15 U.O.N.
	W.P.		WEATHER PROOF
	PROVIDE		FURNISH/INSTALL/CONNECT
	E.C.		ELECTRICAL CONTRACTOR
	GFI		GROUND FAULT INTERRUPT RECEPTACLE
	N.I.C.		NOT IN CONTRACT
	C.O.		CONDUIT ONLY (WITH STEEL PULL WIRE)
	EX		EXISTING
	G		GROUND
	U.O.N.		UNLESS NOTED OTHERWISE
	N/L		NIGHT LIGHT CIRCUIT
	EM		EMERGENCY LIGHT

ALL WIRE 3/4" C. 2 #10 + 1 #10G UNLESS NOTED OTHERWISE FOR ALL EXTERIOR WORK

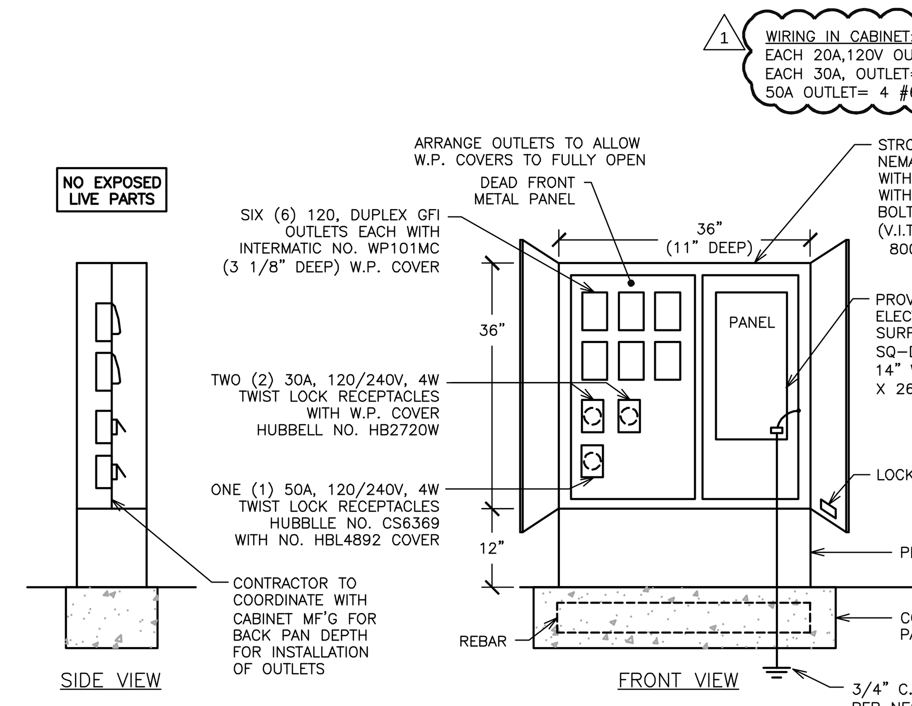

OUTLET CABINETS 'CA', 'CB' (E)
N.T.S.

FIXTURE SCHEDULE

TYPE	DESCRIPTION
A	SEE DETAIL 'B', E-3
B	SEE DETAIL 'C', E-3
C	SEE DETAIL 'D', E-3
CC	SEE DETAIL 'D', E-3
D	(NOT USED)
E	SEE DETAIL 'F', E-3
F	SEE DETAIL 'H', E-3
G	SEE DETAIL 'I', E-3
TA,TB, TC	SEE DETAIL 'C', E-5
H	SEE DETAIL 'C', E-4
K,L,M	SEE SHEET E-6
MUSCO POLES	SEE DETAIL 'D', E-4

PANEL: 'CA' ('CB')

DATE: 12/13/05 TIME: 12:34:44 JOB: 1944
PANEL VOLTAGE: 240/120 1Φ 3 W BUS: 100A MAINS: 100A/2P AIC RATING: 10,000
CIRCUIT CODE: blank or N : NON-CONTINUOUS; L : LONG-CONTINUOUS; R : DEMANDABLE RECEPTACLES; K : KITCHEN
MOUNTING:
NO. OF EQUIPMENT: 0

CKT NO	CODE	TRIP	POLE	DESCRIPTION	(NOTE)	M	R	L	ΦA	ΦB	A B	ΦA	ΦB	L	R	M	(NOTE) DESCRIPTION	TRIP	POLE	CODE	CKT NO
1		20	1	OUTLET					500			2000					30A OUTLET	30			2
3		20	1	OUTLET						500			2000				–		2		4
5		20	1	OUTLET					500			2000					30A OUTLET	30			6
7		20	1	OUTLET						500			2000				–		2		8
9		20	1	OUTLET					500			3500					50A OUTLET	50			10
11		20	1	OUTLET						500			3500	1			–		2		12
13		20	1	OUTLET					500								SPARE				14
15				SPACE													SPARE				16
17				SPACE													SPARE				18
19				SPACE													SPARE				20

PANEL NOTES: PHASE TOTALS ΦA: 9500 ΦB: 9500

TOTAL CONNECTED VA	19000
CONNECTED VA (CODE N)	
CONNECTED VA (CODE L)	
CONNECTED VA (CODE R)	
CONNECTED VA (CODE K)	
PANEL CONNECTED KVA	
PANEL DEMAND KVA	
PANEL DEMAND AMPS	
HIGH Φ AMPS W/LCL	79

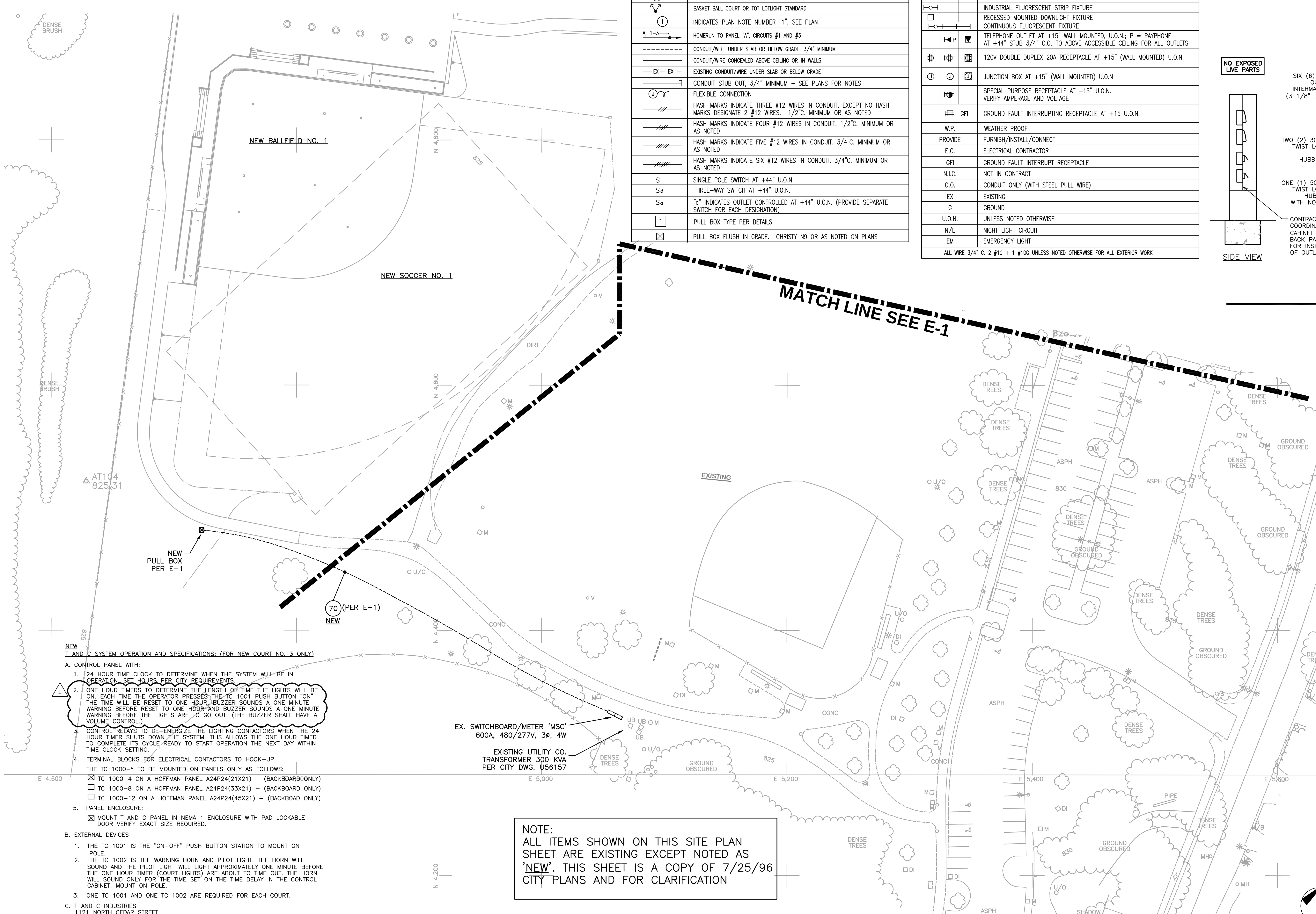

NEW
T AND C SYSTEM OPERATION AND SPECIFICATIONS: (FOR NEW COURT NO. 3 ONLY)

A. CONTROL PANEL WITH:
1. 24 HOUR TIME CLOCK TO DETERMINE WHEN THE SYSTEM WILL BE IN OPERATION. SET HOURS PER CITY REQUIREMENTS.
2. (1) ONE HOUR TIMERS TO DETERMINE THE LENGTH OF TIME THE LIGHTS WILL BE ON. EACH TIME THE OPERATOR PRESSES THE TC 1001 PUSH BUTTON "ON" THE TIME WILL BE RESET TO ONE HOUR. BUZZER SOUNDS A ONE MINUTE WARNING BEFORE RESET TO ONE HOUR AND BUZZER SOUNDS A ONE MINUTE WARNING BEFORE THE LIGHTS ARE TO GO OUT. (THE BUZZER SHALL HAVE A VOLUME CONTROL.)
3. CONTROL RELAYS TO DE-ENERGIZE THE LIGHTING CONTACTORS WHEN THE 24 HOUR TIMER SHUTS DOWN THE SYSTEM. THIS ALLOWS THE ONE HOUR TIMER TO COMPLETE ITS CYCLE READY TO START OPERATION THE NEXT DAY WITHIN TIME CLOCK SETTING.
4. TERMINAL BLOCKS FOR ELECTRICAL CONTACTORS TO HOOK-UP.
THE TC 1000-* TO BE MOUNTED ON PANELS ONLY AS FOLLOWS:
- ☒ TC 1000-4 ON A HOFFMAN PANEL A24P24(21X21) - (BACKBOARD ONLY)
- ☐ TC 1000-8 ON A HOFFMAN PANEL A24P24(33X21) - (BACKBOARD ONLY)
- ☐ TC 1000-12 ON A HOFFMAN PANEL A24P24(45X21) - (BACKBOAD ONLY)
5. PANEL ENCLOSURE:
- ☒ MOUNT T AND C PANEL IN NEMA 1 ENCLOSURE WITH PAD LOCKABLE DOOR VERIFY EXACT SIZE REQUIRED.

B. EXTERNAL DEVICES
1. THE TC 1001 IS THE "ON-OFF" PUSH BUTTON STATION TO MOUNT ON POLE.
2. THE TC 1002 IS THE WARNING HORN AND PILOT LIGHT. THE HORN WILL SOUND AND THE PILOT LIGHT WILL LIGHT APPROXIMATELY ONE MINUTE BEFORE THE ONE HOUR TIMER (COURT LIGHTS) ARE ABOUT TO TIME OUT. THE HORN WILL SOUND ONLY FOR THE TIME SET ON THE TIME DELAY IN THE CONTROL CABINET. MOUNT ON POLE.
3. ONE TC 1001 AND ONE TC 1002 ARE REQUIRED FOR EACH COURT.

C. T AND C INDUSTRIES
1121 NORTH CEDAR STREET
GLENDALE, CA 91207
818/240-3600
FAX: 818/547-9359

NOTE:
ALL ITEMS SHOWN ON THIS SITE PLAN SHEET ARE EXISTING EXCEPT NOTED AS 'NEW'. THIS SHEET IS A COPY OF 7/25/96 CITY PLANS AND FOR CLARIFICATION

EXISTING ELECTRICAL SITE PLAN (A)
1" = 40' - 0"

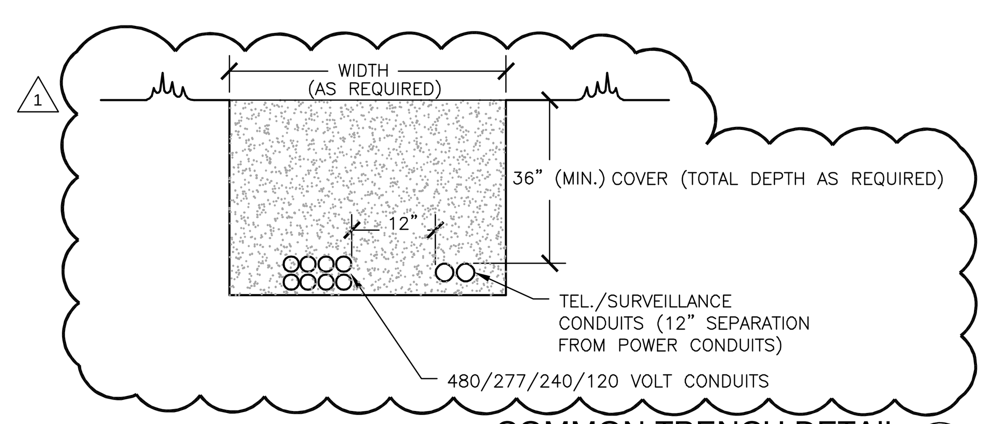

COMMON TRENCH DETAIL (E)
N.T.S.

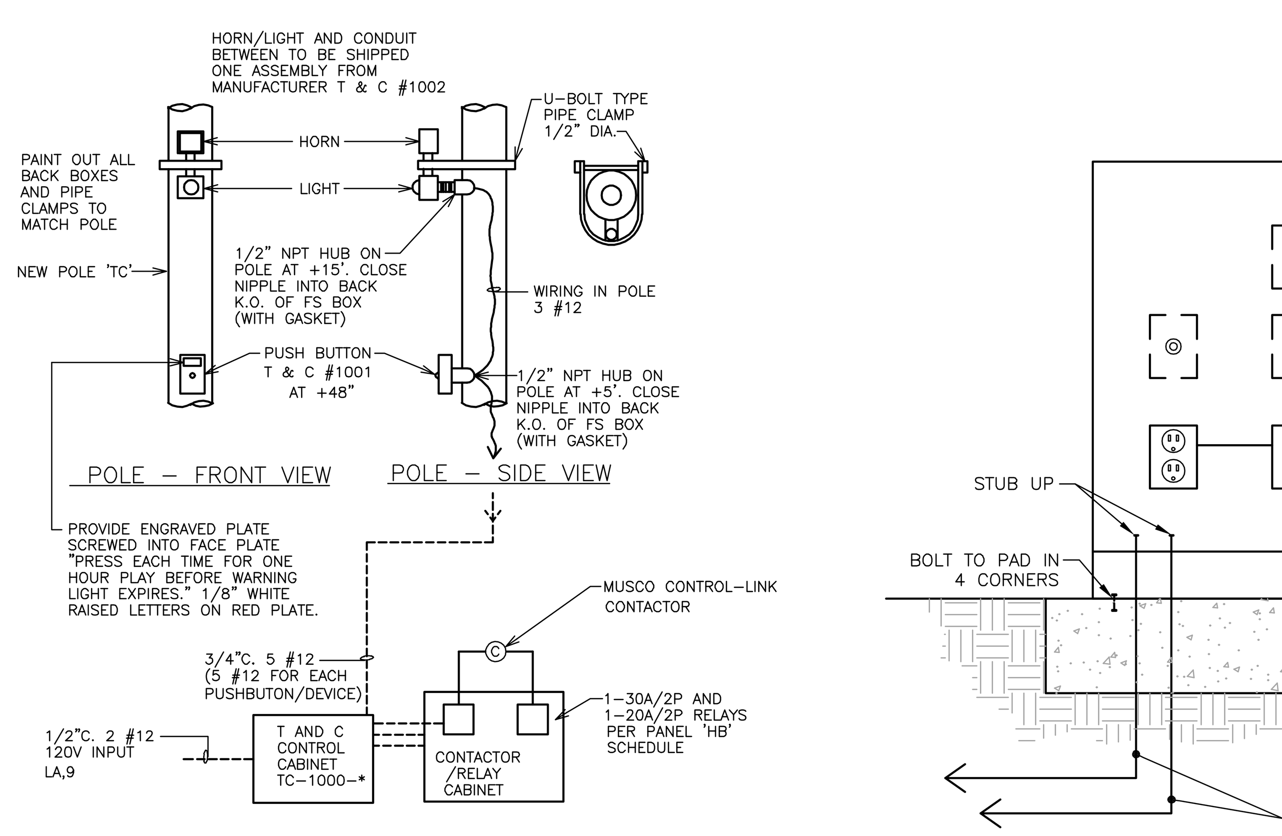

NEW 'T AND C' CONTROL BASKET BALL COURTS (D)
N.T.S.

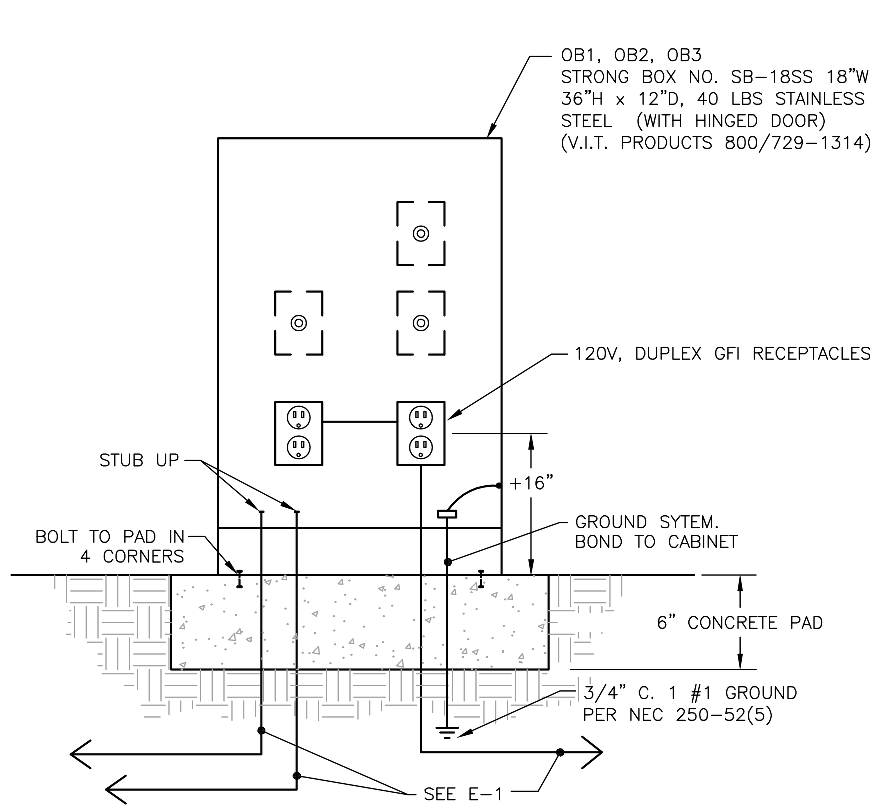

OB, OB2, OB3 CABINETS (C)
N.T.S.

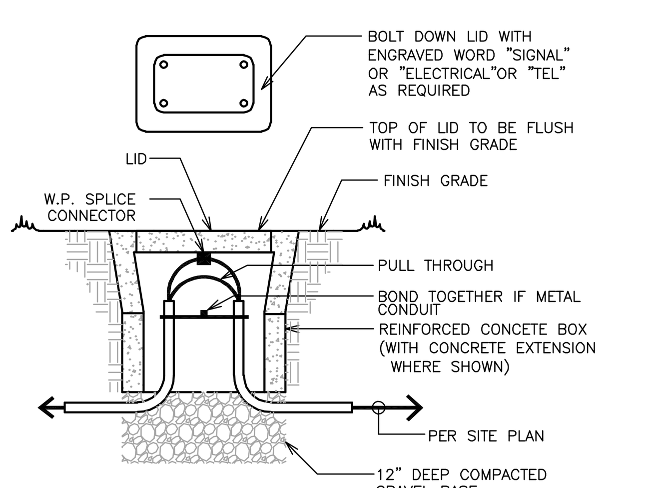

* NOTE: WHERE VAULT BOX IS ADJACENT TO CONCRETE WALK SET FLUSH NEXT TO WALKWAY

PULL BOX SCHEDULE

- [1] (1) = CHRISTY NO. N9 (10" X 15" X 12" DEEP) WITH FL9T FIBRELYTE LID.
- [1X] (1X) = SAME AS (1) EXCEPT WITH 12" DEEP EXTENSION.
- [2] (2) = CHRISTY NO. N16 (12" X 22" X 12" DEEP) WITH FL16T FIBRELYTE LID.
- [2X] (2X) = SAME AS (2) EXCEPT WITH 12" DEEP EXTENSION.
- [3] (3) = CHRISTY NO. N30 (13" X 24" X 12" DEEP) WITH FL30T FIBRELYTE LID.
- [3X] (3X) = SAME AS (3) EXCEPT WITH 12" DEEP EXTENSION.
- [4] (4) = CHRISTY NO. N36 (17" X 30" X 12" DEEP) WITH FL36T FIBRELYTE LID.
- [4X] (4X) = SAME AS (4) EXCEPT WITH 12" DEEP EXTENSION.
- [5] (5) = CHRISTY NO. N40 (24" X 30" X 14" DEEP) WITH N40T CONCRETE LID.
- [5X] (5X) = SAME AS (5) EXCEPT WITH 10" DEEP EXTENSION.
- [6] (6) = CHRISTY NO. N44 (20" X 44" X 12" DEEP) WITH N44 CONCRETE LID.
- [6X] (6X) = SAME AS (6) EXCEPT WITH 8" DEEP EXTENSION.
- [7] (7) = CHRISTY NO. N48 (30" X 48" X 14" DEEP) WITH N48T2 CONCRETE LID.
- [7X] (7X) = SAME AS (7) EXCEPT WITH 10" DEEP EXTENSION.
- [8] (8) = CHRISTY NO. N52 (30" X 60" X 14" DEEP) WITH N52-623 WITH TWO SECTION STEEL LID.
- [8X] (8X) = SAME AS (8) EXCEPT WITH 10" DEEP EXTENSION.
- (TL) = TRAFFIC LID (STEEL) WHERE SHOWN. ALL LIDS TO BE BOLT DOWN. LIDS TO BE "FIBERLYTE" FOR PULL BOXES NO. 1, 2, 3 AND 4. CONCRETE LIDS FOR PULL BOXES NO. 5, 6, 7. STEEL LID FOR PULL BOX NO. 8. ALL LIDS TO BE ENGRAVED "ELECTRICAL" FOR POWER (OR "SIGNAL"FOR OTHERS).

ALL BOXES TO SET ON 12" COMPACTED GRAVEL BASE WIDTH X LENGTH OF BOX.

SPLICES:
COPPER CONDUCTOR SPLICES AND TAPS OF #8 AWG AND SMALLER SHALL BE MADE WITH WATERPROOF WIRE NUT CONNECTORS. KING SAFETY PRODUCTS #621, #622 OR #623. WHICH ARE THREE SIZES (OR EQUAL) THESE WIRE NUTS ARE U.L. LISTED FOR "WET" LOCATIONS AND CONTAIN A SEALANT PASTE.

COPPER CONDUCTOR SPLICES OF #6 AWG AND LARGER SHALL BE MADE WITH SPLIT-BOLT CONNECTORS SUCH AS BURNDY "SERVIT" (OR EQUAL) WITH DOUBLE WRAPPED "SCOTCH" #33+ ALL WEATHER VINYL PLASTIC ELECTRICAL TAPE OR WITH "E-Z SEAL" #2200 VINYL INSULATING PADS, BY 3M, OR WITH SIERRA/TOMIC #4000 VINYL SEAL PADS.

PULL BOX DETAIL (B)
N.T.S.

POWER AND TELEPHONE UTILITY GENERAL NOTES

A. UTILITY POINTS OF SERVICE AND WORK/MATERIAL SHOWN ARE BASED ON PRELIMINARY INFORMATION ONLY BY THE UTILITY COMPANIES AND ARE FOR BID PURPOSES ONLY.

B. LOCATIONS OF UTILITIES SHOWN ARE APPROXIMATE AND CONTRACTOR SHALL EXERCISE EXTREME CAUTION IN EXCAVATING AND TRENCHING ON THIS SITE TO AVOID EXISTING DUCTS, PIPING OR CONDUITS, ETC., AND TO PREVENT HAZARD TO PERSONNEL AND/OR DAMAGE TO EXISTING UNDERGROUND UTILITIES OR STRUCTURES WHETHER OR NOT SHOWN AND INSTALLED BY ANY OTHER CONTRACTS. THE ENGINEER IS NOT RESPONSIBLE FOR THE LOCATION UNDERGROUND UTILITIES OR STRUCTURES WHETHER OR NOT SHOWN OR DETAILED AND INSTALLED BY ANY OTHER CONTRACTS. THE CONTRACTOR SHALL IMMEDIATELY NOTIFY THE ENGINEER SHOULD SUCH UNIDENTIFIED CONDITIONS BE DISCOVERED. THESE DRAWINGS AND SPECIFICATIONS DO NOT INCLUDE THE NECESSARY ELEMENTS FOR CONSTRUCTION SAFETY.

C. CONTRACTOR SHALL COORDINATE WITH UTILITY COMPANY FOR FINAL AND EXACT WORK/MATERIAL REQUIREMENTS AND CONSTRUCT TO UTILITY COMPANY ENGINEERING PLANS AND SPECIFICATIONS ONLY. CONTRACTOR SHALL FURNISH AND INSTALL ALL CONDUIT, PULL WIRES, CABLES, PULLBOXES, CONCRETE ENCASEMENT OF CONDUIT (IF REQUIRED), TRANSFORMER PAD, BARRIERS, POLE RISERS, TRENCHING, BACKFILL, PAY ALL UTILITY COMPANY FEES AND INCLUDE ALL REQUIREMENTS IN SCOPE OF WORK.

D. CONTRACTOR SHALL SUBMIT SHOP DRAWINGS OF METER PANEL TO UTILITY CO. FOR UTILITY CO. APPROVAL PRIOR TO ORDERING AND INSTALLATION OF METER PANEL.

E. CALL "UNDERGROUND ALERT" BEFORE YOU DIG:
SOUTHERN CALIFORNIA: 1-800-227-2600

F. UTILITY CO. CONTACTS:
MR. VAHID BAZEL
CITY OF RIVERSIDE-PUBLIC UTILITIES

3900 MAIN STREET
RIVERSIDE, CA 92521
951/826-5830

REEDCORP ENGINEERING
CONSULTING ELECTRICAL ENGINEERS
2061 Business Center Drive, Suite 110
Irvine, CA 92612
(949) 752-1278 FAX: (949) 752-1287
E-MAIL : ee@reedcorp.net
04-216-1944

RHA LANDSCAPE ARCHITECTS PLANNERS, INC.
3612 MISSION INN AVE
RIVERSIDE, CALIFORNIA 92501
LIC. #1512
PH. (909) 781-1930
FAX (909) 686-8091

© R H A Landscape Architects -Planners, Inc. expressly reserves its common law copyright and other property rights in these plans. These plans are not to be reproduced, changed or copied in any form or manner whatsoever nor are they to be assigned to any third party without first obtaining the express written permission.

CLIENT:
THE CITY OF RIVERSIDE
PARK AND RECREATION DEPT.
3900 Main Street
Riverside, California 92522

PROJECT:
Reid Park Expansion
Community Park
Orange St. and Garner Rd.

REVISIONS	DATE	BY
1 MISC.	1/26/06	RR

REGISTERED PROFESSIONAL ENGINEER THOMAS E. HARTMAN No. 7531 Exp: 9/30/08 ELECTRICAL STATE OF CALIFORNIA

SHEET TITLE
ELECTRICAL SITE PLAN

DESIGNED	MR
DRAWN	MR
CHECKED	RR
DATE	01-17-06
SCALE	1"=40'-0"
JOB NO.	

SHEET E-2 OF 6 SHEETS

[One Inch on Original Sheet] Drawing File: Z:\SDSKPROJ\1944\Reid Park\Sheets\ E-2 Electrical Site Plan Sep 10, 2007 - 12:21pm
Z:\SDSKPROJ\1944\Reid Park\Sheets\E-2 Electrical Site Plan.dwg, E-2 Site Plan, 9/10/2007 12:21:47 PM, marioh, DWF6 ePlot.pc3, Reedcorp Engineering, Inc., Reedcorp Engineering, Inc.

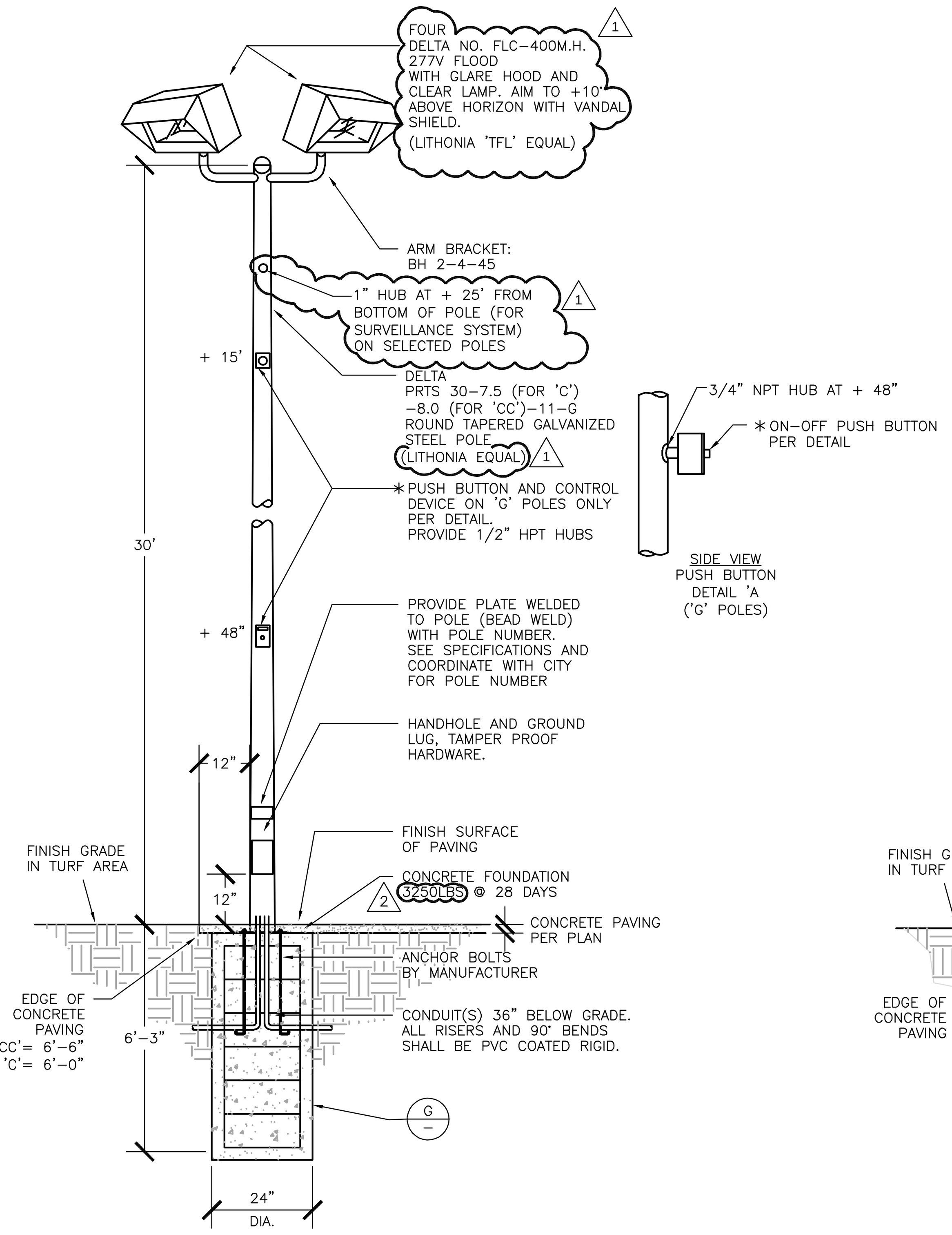

(BASKET BALL) FIXTURE 'C' AND 'CC' (D)

N.T.S.

∗ LIGHT STANDARD 'F'= TWO FIXTURES
∗ LIGHT STANDARD 'G'= TWO FIXTURES WITH ON/OFF CONTROLS

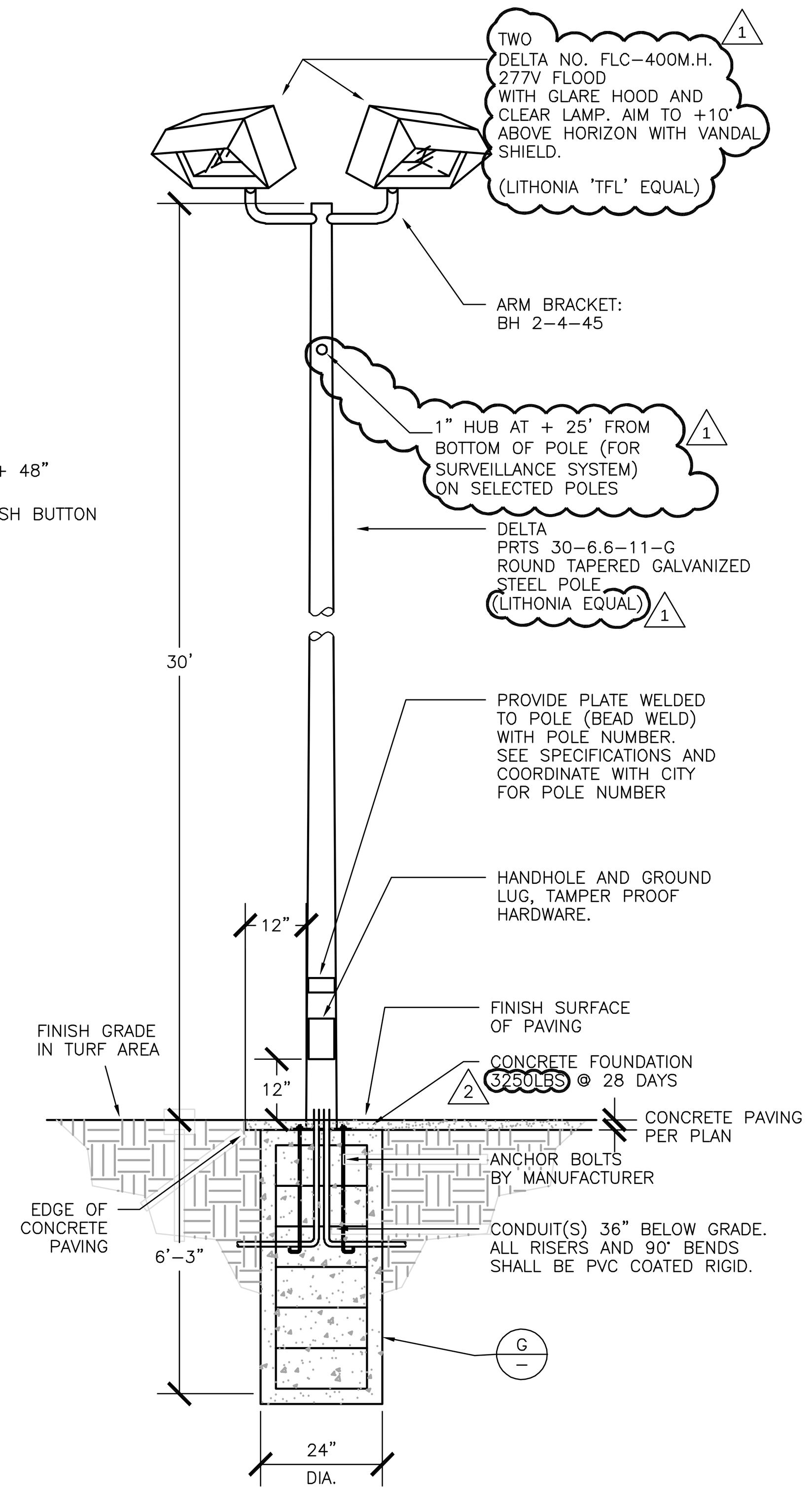

(TOT LOT) FIXTURE 'B' (C)

N.T.S.

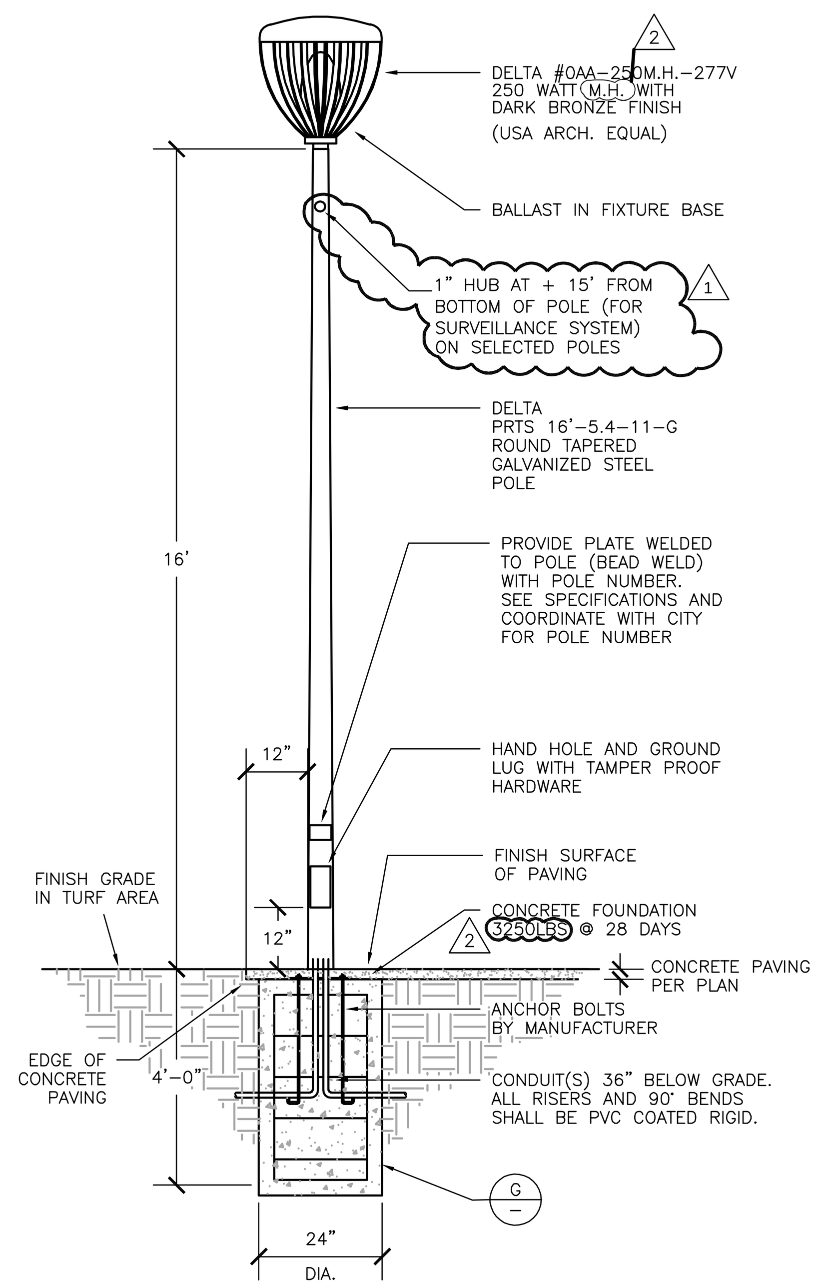

(WALKWAY) FIXTURE 'A' (B)

N.T.S.

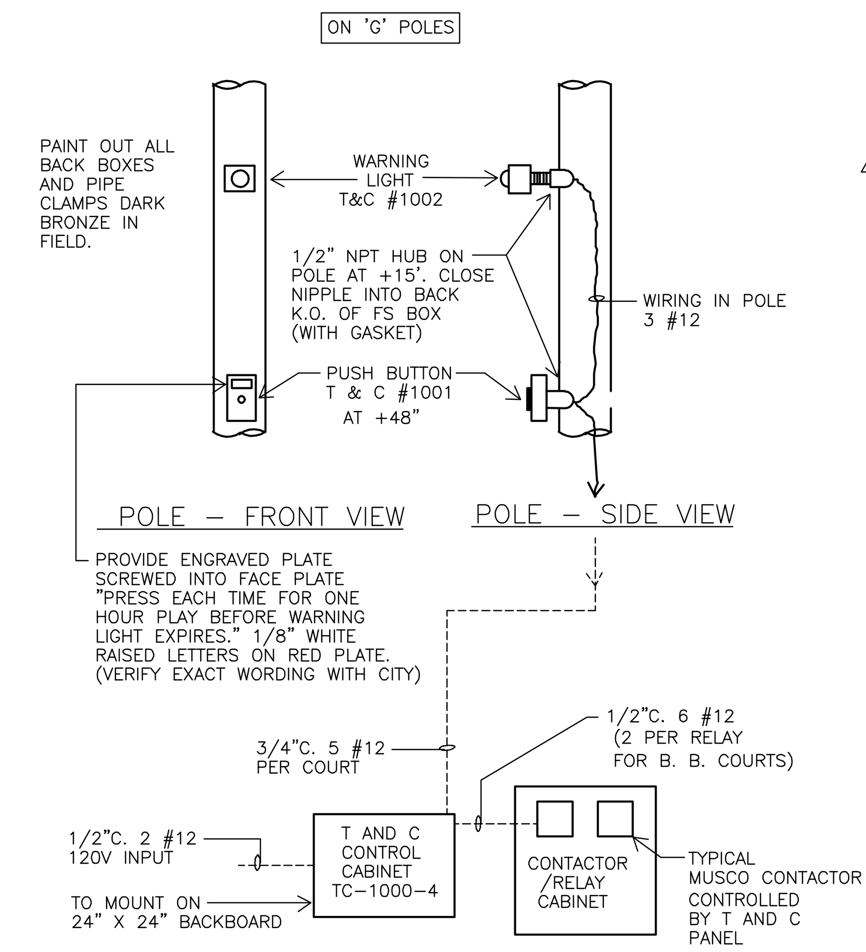

T AND C SYSTEM OPERATION AND SPECIFICATIONS:

A. CONTROL PANEL WITH:

1. 24 HOUR TIME CLOCK TO DETERMINE WHEN THE SYSTEM WILL BE IN OPERATION. SET HOURS PER CITY REQUIREMENTS.
2. ONE HOUR TIMERS TO DETERMINE THE LENGTH OF TIME THE LIGHTS WILL BE ON. EACH TIME THE OPERATOR PRESSES THE TC 1001 PUSH BUTTON "ON" THE TIME WILL BE RESET TO ONE HOUR. BUZZER SOUNDS A ONE MINUTE WARNING BE RESET TO ONE HOUR. BUZZER SOUNDS A ONE MINUTE WARNING BEFORE THE LIGHTS ARE TO GO OUT. (THE BUZZER SHALL HAVE A VOLUME CONTROL.)
3. CONTROL RELAYS TO DE–ENERGIZE THE LIGHTING CONTACTORS WHEN THE 24 HOUR TIMER SHUTS DOWN THE SYSTEM. THIS ALLOWS THE ONE HOUR TIMER TO COMLETE ITS CYCLE READY TO START OPERATION THE NEXT DAY WITHIN TIME CLOCK SETTING.
4. TERMINAL BLOCKS FOR ELECTRICAL CONTACTORS TO HOOK–UP.

THE TC 1000–* TO BE MOUNTED ON PANELS ONLY AS FOLLOWS:

☒ TC 1000–4 ON A HOFFMAN PANEL A24P24(21X21) – (BACKBOARD ONLY)

5. PANEL ENCLOSURE:

☒ MOUNT T AND C PANEL IN NEMA 1 ENCLOSURE WITH PAD LOCKABLE DOOR VERIFY EXACT SIZE REQUIRED.

☐ MOUNT T AND C PANEL INSIDE SWITCHGEAR AS SHOWN.

B. EXTERNAL DEVICES

1. THE TC 1001 IS THE "ON–OFF" PUSH BUTTON STATION TO MOUNT ON POLE.
2. THE TC 1002 IS THE WARNING HORN AND PILOT LIGHT. THE HORN WILL SOUND AND THE PILOT LIGHT WILL LIGHT APPROXIMATELY ONE MINUTE BEFORE THE ONE HOUR TIMER (COURT LIGHTS) ARE ABOUT TO TIME OUT. THE HORN WILL SOUND ONLY FOR THE TIME SET ON THE TIME DELAY IN THE CONTROL CABINET. MOUNT ON POLE.
3. ONE TC 1001 AND ONE TC 1002 ARE REQUIRED FOR EACH COURT.

C. T AND C INDUSTRIES
1121 NORTH CEDAR STREET
GLENDALE, CA 91207
818/240–3600
FAX: 818/547–9359

T AND C CONTROL DATA (BASKETBALL COURTS) (A)

N.T.S.

PROVIDE 3/4" NPT HUB AT + 15 FT. ON THE FOLLOWING POLES PER NOTE (73) ON SHT. E–1
A= 6 POLES
B= 1 POLE
E= 1 POLE
F= 4 POLES
TB= 1 POLE
CC= 1 POLE

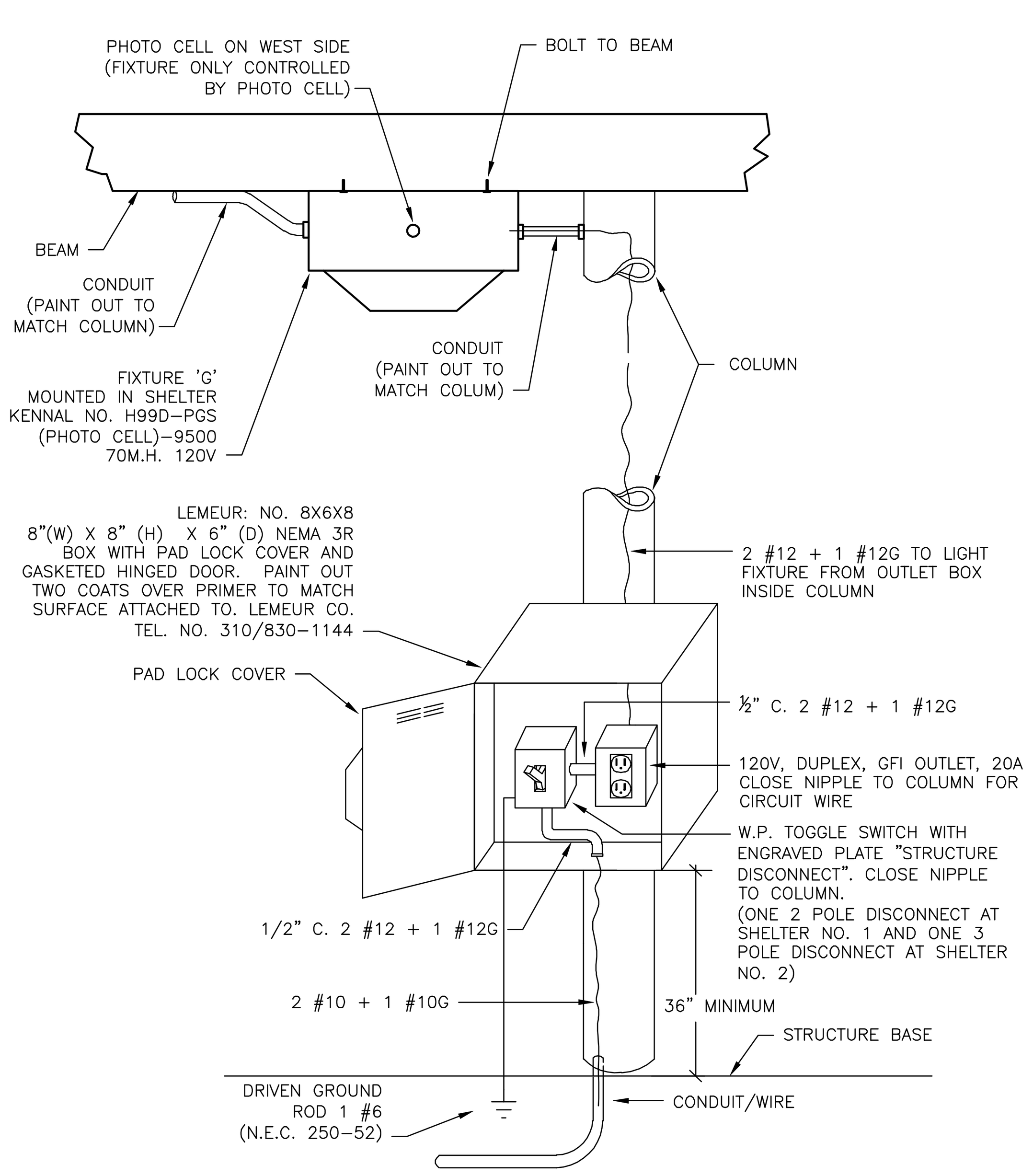

OUTLET BOX AND FIXTURE 'G' DETAIL (I)

N.T.S.

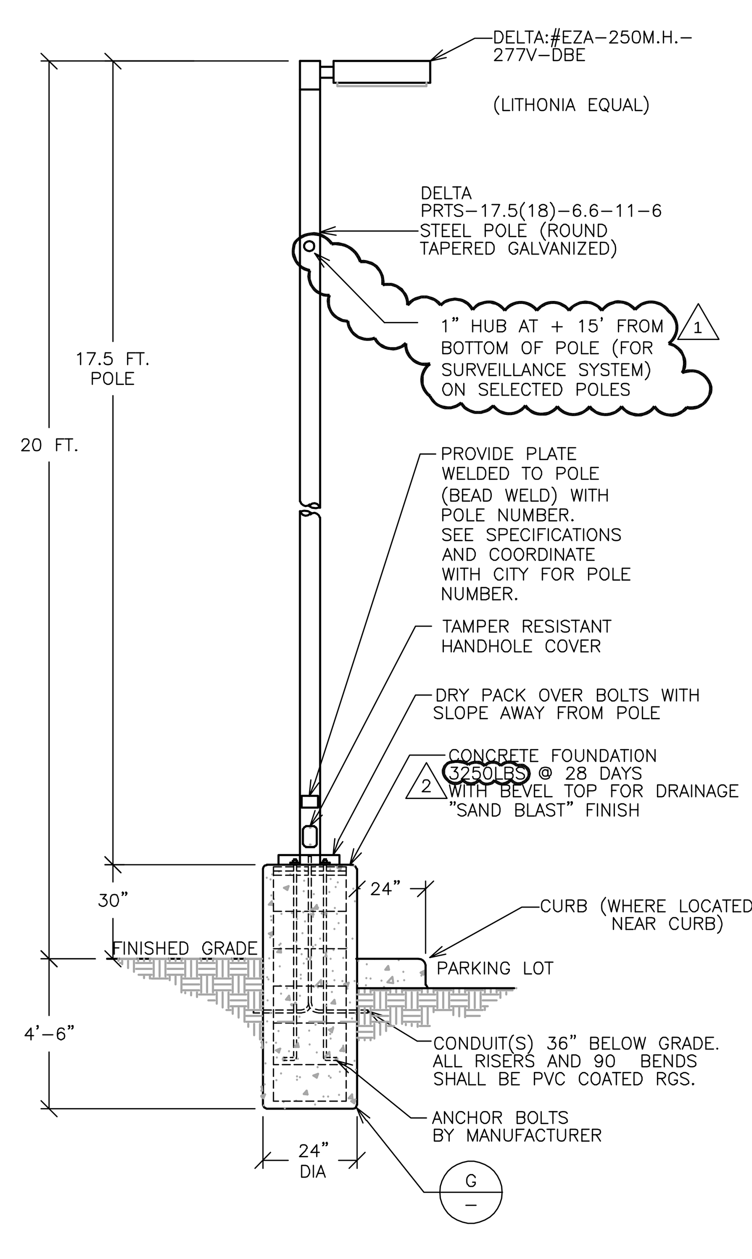

(PARKING LOT) FIXTURE 'F' (H)

N.T.S.

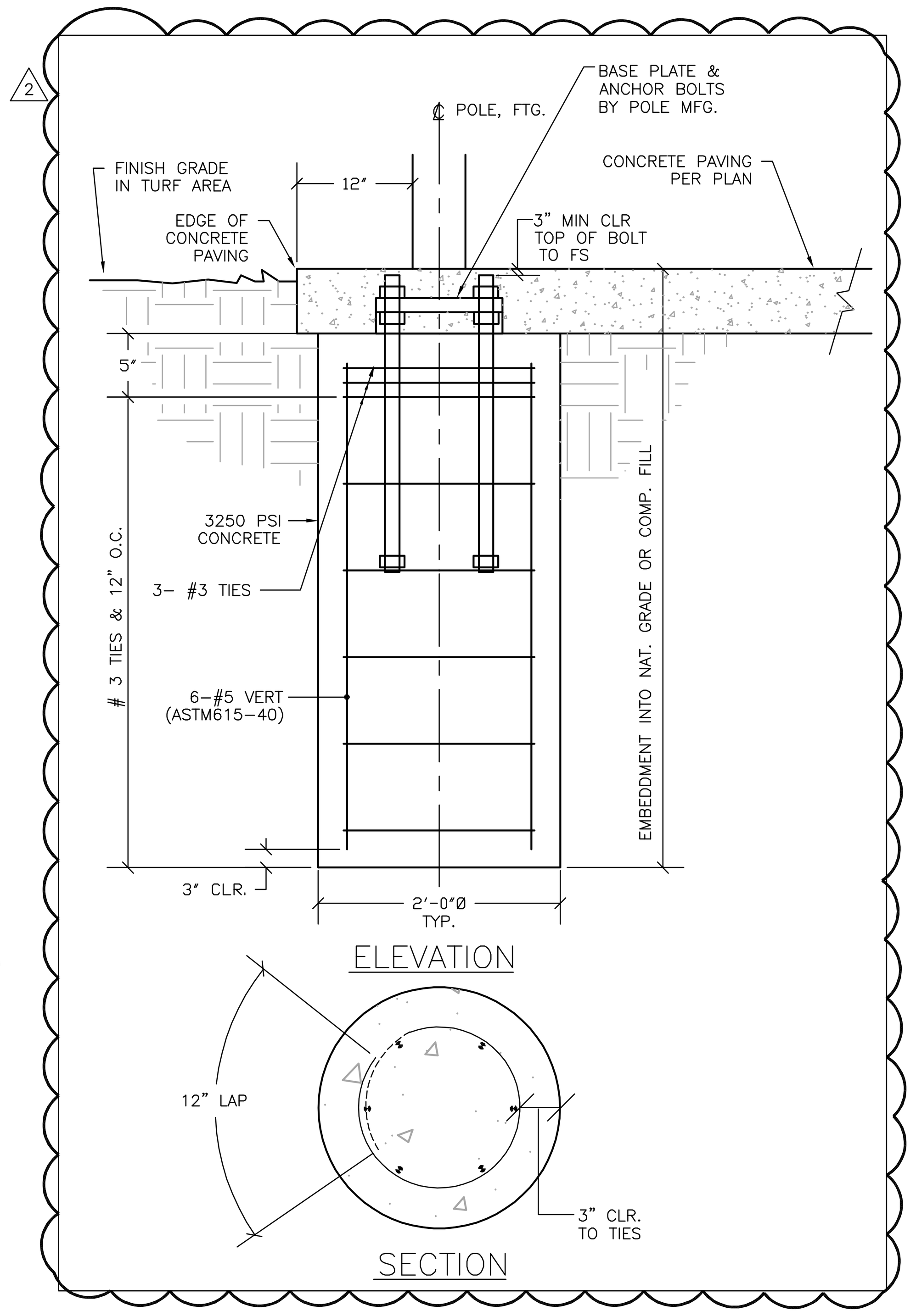

TYPICAL POLE FOOTING DETAIL (G)

N.T.S.

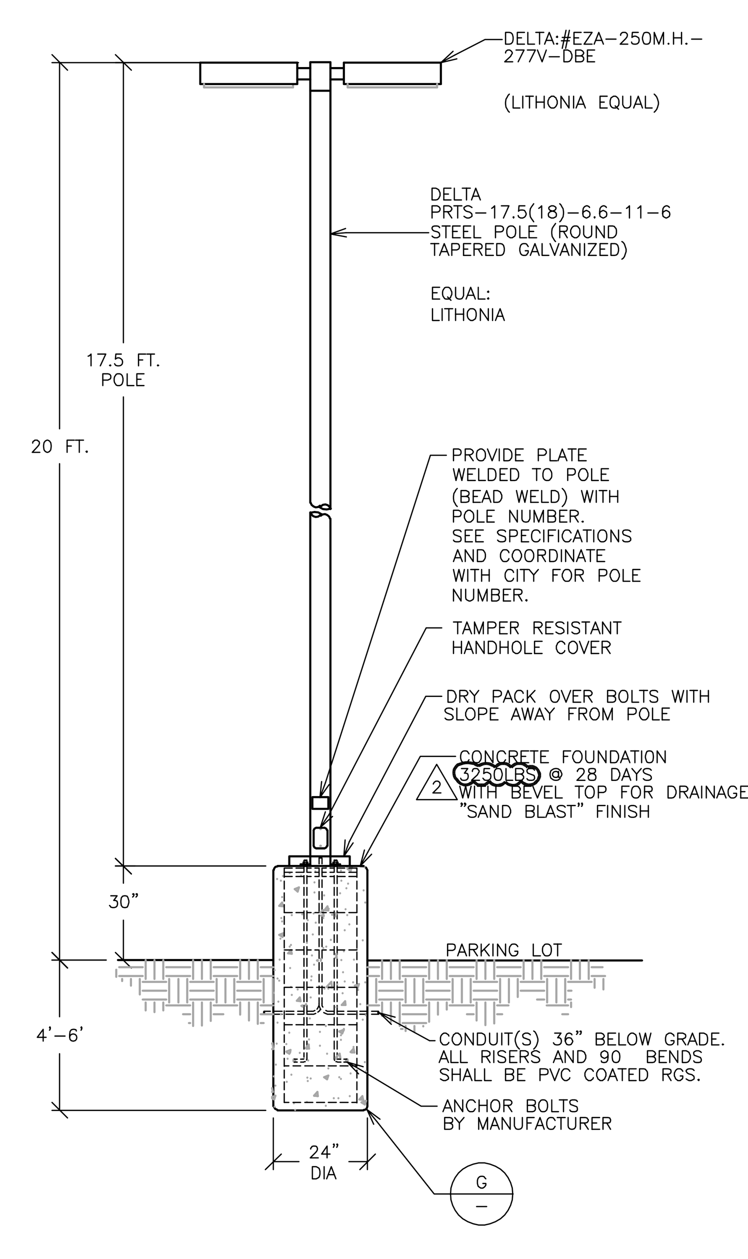

(PARKING LOT) FIXTURE 'E' (F)

N.T.S.

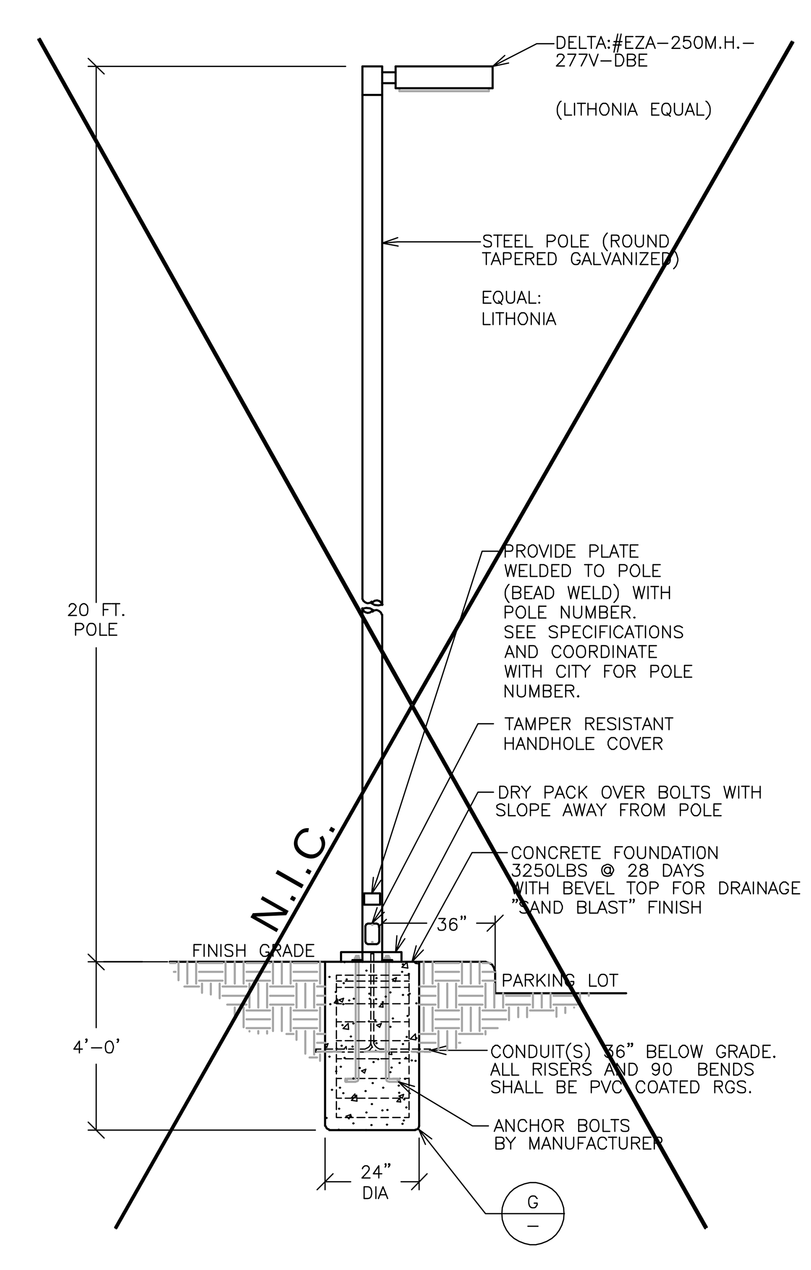

(PARKING LOT) FIXTURE 'D' (E)

(N.I.C.) N.T.S.

REEDCORP ENGINEERING
CONSULTING ELECTRICAL ENGINEERS
2061 Business Center Drive, Suite 110
Irvine, CA 92612
(949) 752–1278 FAX: (949) 752–1287
E–MAIL : ee@reedcorp.net
04–216–1944

RHA LANDSCAPE ARCHITECTS PLANNERS, INC.
3612 MISSION INN AVE
RIVERSIDE, CALIFORNIA
92501
LIC. #1512
PH. (909) 781–1930
FAX (909) 686–8091

© R H A Landscape Architects –Planners, Inc. expressly reserves its common law copyright and other property rights in these plans. These plans are not to be reproduced, changed or copied in any form or manner whatsoever nor are they to be assigned to any third party without first obtaining the express written permission.

CLIENT:
THE CITY OF RIVERSIDE
PARK AND RECREATION DEPT.
3900 Main Street
Riverside, California 92522

PROJECT:
Reid Park
Expansion
Community Park
Orange St. and Garner Rd.

REVISIONS	DATE	BY
1 MISC.	1/26/06	RR
2 MISC.	7/18/06	RR

REGISTERED PROFESSIONAL ENGINEER
THOMAS E. HARTMAN
No. 7531
Exp: 9/30/08
ELECTRICAL
STATE OF CALIFORNIA

SHEET TITLE
ELECTRICAL DETAILS

DESIGNED	MR
DRAWN	MR
CHECKED	RR
DATE	01-17-06
SCALE	AS NOTED
JOB NO.	

SHEET
E–3
OF 6 SHEETS

[One Inch on Original Sheet] Drawing File: Z:\SDSKPROJ\1944\Reid Park\Sheets\ E-3 Electrical Details Sep 10, 2007 - 12:27pm

Z:\SDSKPROJ\1944\Reid Park\Sheets\E-3 Electrical Details.dwg, E-3 Electrical Details, 9/10/2007 12:27:33 PM, marioh, DWF6 ePlot.pc3, Reedcorp Engineering, Inc., Reedcorp Engineering, Inc.

Z:\SDSKPROJ\1944\Reid Park\Sheets\E-4 Musco Electrical Details.dwg, E-4 Electrical Details, 9/10/2007 12:28:16 PM, marioh, DWF6 ePlot.pc3, Reedcorp Engineering, Inc., Reedcorp Engineering, Inc.

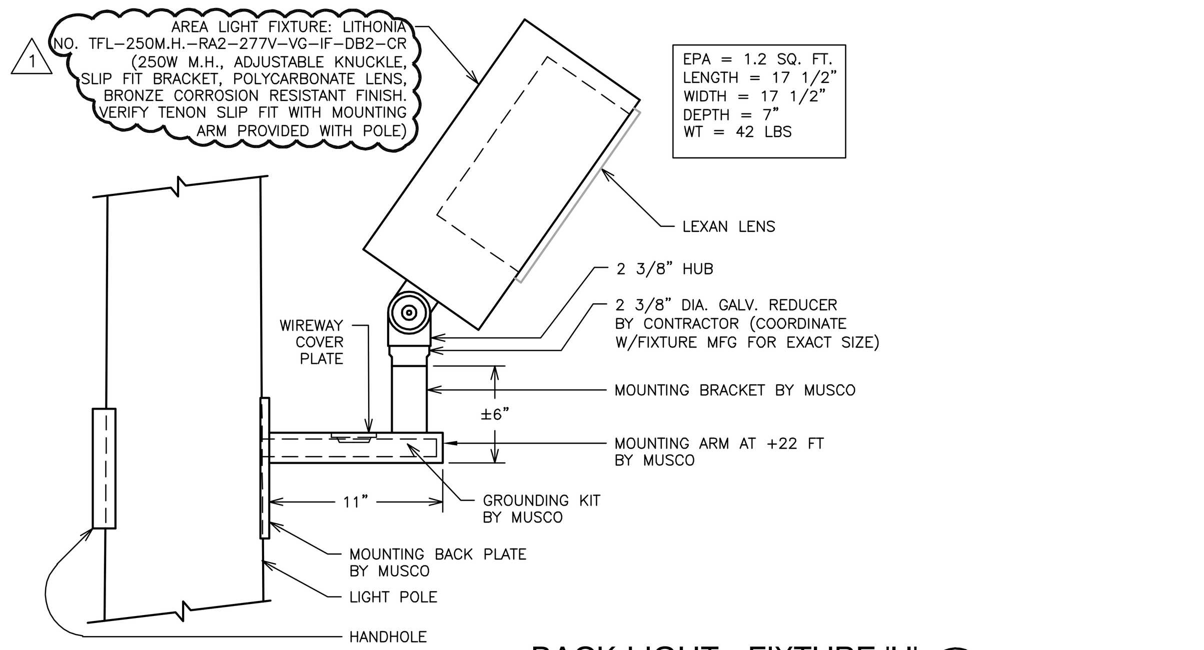

BACK LIGHT - FIXTURE 'H' (C)
N.T.S.

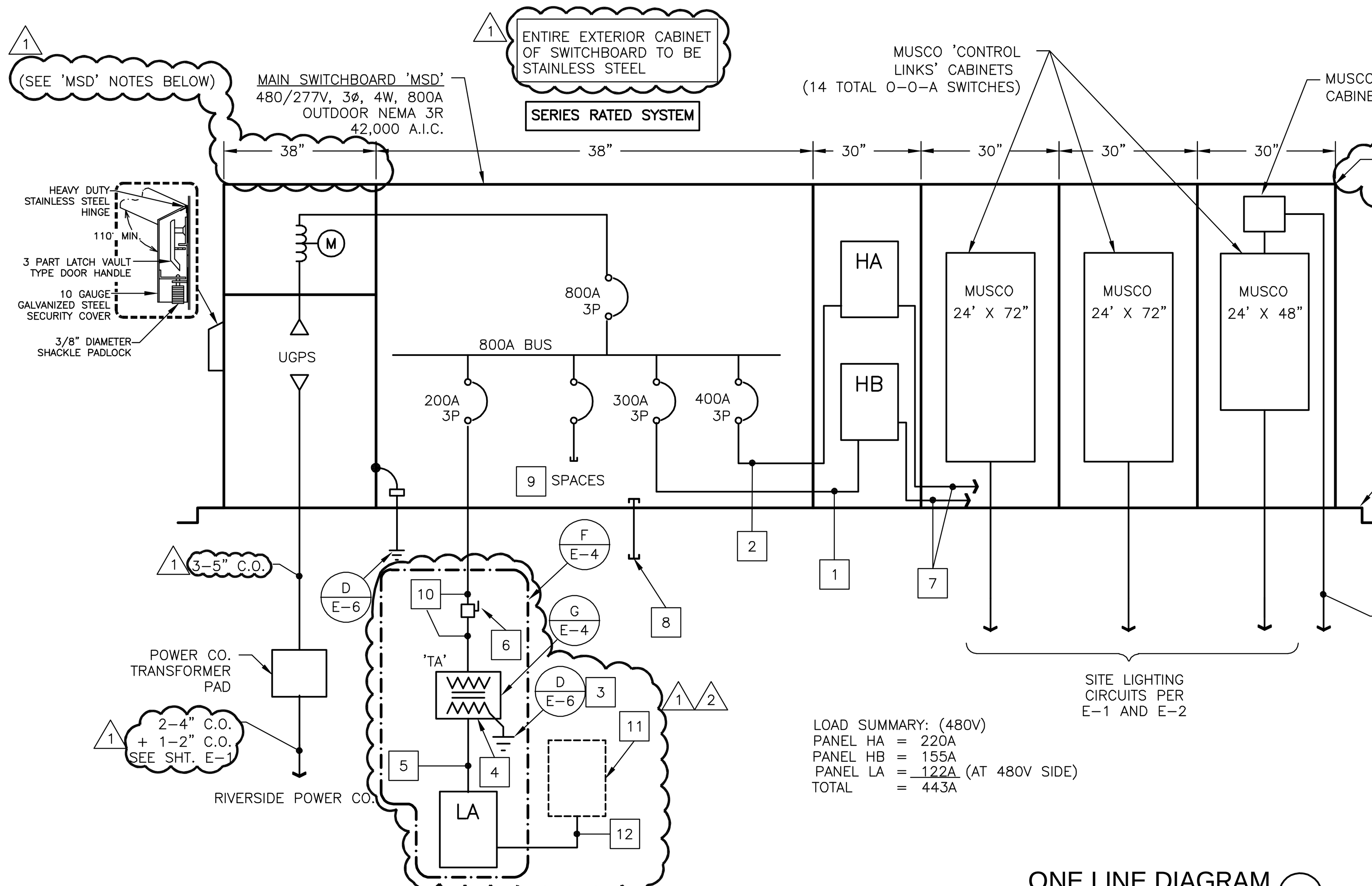

LOAD SUMMARY: (480V)
PANEL HA = 220A
PANEL HB = 155A
PANEL LA = 122A (AT 480V SIDE)
TOTAL = 443A

ONE LINE DIAGRAM (E)
N.T.S.

ONE LINE DIAGRAM NOTES:

1. 3" C. 4 #350 MCM + 1 #4G.
2. 4" C. 4 #500 MCM + 1 #3G.
3. 1 #1 TO SERVICE GROUND.
4. 75 KVA, 480-120/240V. 1ø, 3W DRY TYPE TRANSFORMER BOLTED TO FLOOR. (37" HIGH X 30" WIDE X 24" DEEP; 610 LBS.) NEMA 3R.
5. 3 1/2 " C. 4 #500MCM + 1 #3G.
6. 480V, 3ø, 200A/3P NON-FUSED DISCONNECT MOUNTED TO TRANSFORMER 'TA'.
7. LIGHTING CIRCUITS TO 'HA/HB' FROM MUSCO CONTACTORS. CONDUITS/WIRES TO MATCH E-1 LIGHTING CIRCUITS.
8. STUB OUTS PER E-5, DETAIL 'B'.
9. MINIMUM TWO 100A/3P SPACES.
10. 2 1/2" C. 3⁄6 + 1 #4G
11. 100A/2P 120/240V, 3ø, 3W PANEL PROVIDED WITH PRE-FAB BUILDING.
12. 1 ½" C. 3 #1 + 1 #8 GROUND (LA, 39, 41)

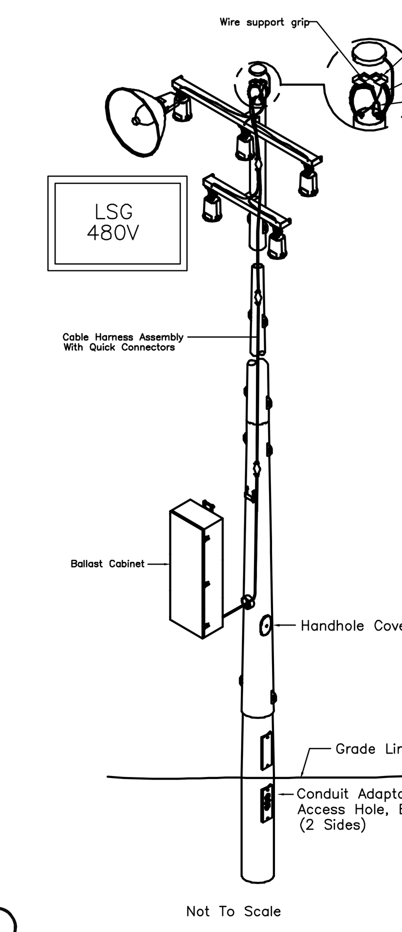

BALLAST CABINET – CIRCUIT BREAKER SCHEDULE						
VOLTAGE	SYSTEM PHASE	METAL HALIDE 1500W # OF FIXTURES	METAL HALIDE 1000W # OF FIXTURES	MAX. AMP RATING	LUG SIZE	WIRE SIZE
480	THREE PHASE	1–6	1–9	35	(1) #14–1/0	#3
480		7–12	10–18	60	(1) #14–1/0	#3
480		13–20	19–20	109	(1) #14–1/0	#3
480		21–35	31–52	175	(1) #6–350 MCM	#2/0
277		1–3	1–5	35	(1) #14–1/0	#3
277		4–7	6–10	60	(1) #14–1/0	#3
277		8–12	11–18	109	(1) #14–1/0	#3
277		13–20	19–31	175	(1) #6–350 MCM	#2/0
240	OR	1–3	1–4	35	(1) #14–1/0	#3
240		4–8	5–9	60	(1) #14–1/0	#3
240		7–10	10–15	100	(1) #14–1/0	#3
240		11–18	16–29	175	(1) #1–500 MCM OR (2) #1–250 MCM	#3
208	SINGLE	1–2	1–4	35	(1) #14–1/0	#3
208		3–5	5–8	60	(1) #14–1/0	#3
208		6–8	9–13	100	(1) #14–1/0	#3
208		9–15	14–23	175	(1) #1–500 MCM OR (2) #1–250 MCM	#3

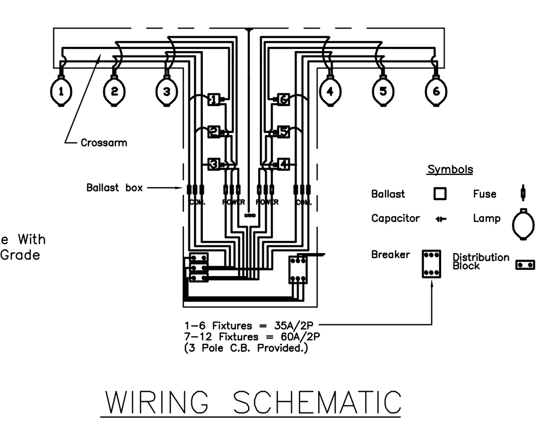

POLE WIRING SYSTEM

WIRING SCHEMATIC
(Ballast Cabinet)

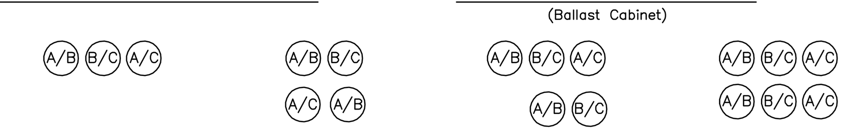

THREE FIXTURES	FOUR FIXTURES	FIVE FIXTURES	SIX FIXTURES
PHASE A = 2 FIX.	PHASE A = 3 FIX.	PHASE A = 3 FIX.	PHASE A = 4 FIX.
PHASE B = 2 FIX.	PHASE B = 3 FIX.	PHASE B = 4 FIX.	PHASE B = 4 FIX.
PHASE C = 2 FIX.	PHASE C = 2 FIX.	PHASE C = 3 FIX.	PHASE C = 4 FIX.

TYPICAL WIRING OF FIXTURES WITH 3ø DISTRIBUTION

BALLFIELD POLE DETAIL (B)
N.T.S.

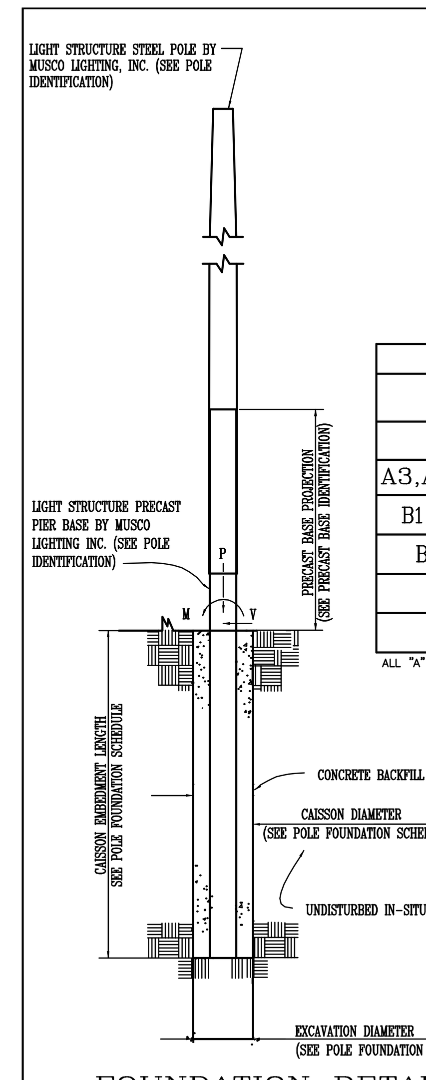

FOUNDATION DETAIL

POLE FOUNDATION SCHEDULE					
TYPE	FORCES (MAXIMUM) MOMENT (M) KIP-FT	SHEAR (V) KIPS	VERTICAL (P) KIPS	CAISSON DIAMETER INCH	EMBEDMENT FEET
LS60–A	28.13	0.805	1.150	30"	10'–0"
LS70–AA	36.38	0.887	1.357	30"	10'–0"
LS70–A	44.42	1.061	1.663	30"	12'–0"
LS80–A	96.90	1.433	2.506	30"	14'–0"
LS90–A	108.23	1.909	3.563	36"	16'–0"

POLE IDENTIFICATION				
LOCATION MARK	POLE TYPE	PRECAST BASETYPE	FIXTURE CONFIGURATION (FIXTURES PER CROSSARM)	FIXTURE EPA
A1, A2	LS60–A	2B	4	9.6
A3,A4,A5,A6	LS70–AA	2B	4	9.6
B1,B2,C5,C6	LS70–A	3B	6(3+3)	13.8
B3,B5,B6	LS80–A	4B	7(4+3)	16.1
B4	LS80–A	4B	8(4+4)	17.6
C2,C4	LS90–A	5B	12(6+6)	25.2

ALL "A" POLES AND "B1" THROUGH "B4" POLES HAVE A SECURITY LIGHT MOUNTED AT + 22' AGL.

THIS DRAWING IS A COPY OF THE SIGNED STRUCTURAL ENGINEERS CALCULATIONS

PRECAST BASE TYPE	WEIGHT LBS	OVERALL LENGTH FEET	HEIGHT ABOVE GRADE	EMBEDMENT IN CAISSON FEET	OUTSIDE DIAMETER INCHES
2B	1.840	17'–3"	7'–3"	10'–0"	12.00"
3B	2.670	20'–0"	8'–0"	12'–0"	13.38"
4B	3.710	22'–0"	8'–0"	14'–0"	15.75"
5B	5.180	23'–11"	7'–11"	16'–0"	18.25"

GENERAL NOTES

GENERAL

ALL CONSTRUCTION AND WORKMANSHIP SHALL CONFORM TO THE UNIFORM BUILDING CODE, 2001 EDITION.

WIND :70 MPH (EXPOSURE C)

REFERENCE POLE LOCATION DRAWING FOR ACTUAL POLE PLACEMENT AND SITE LOCATION.

THE CONTRACTOR IS SOLELY RESPONSIBLE FOR ALL CONSTRUCTION PROCEDURES AND SAFETY CONDITIONS AT THE JOB SITE.

SOIL DESIGN PARAMETERS

ALLOWABLE END BEARING SOIL PRESSURE: 1,000 PSF OR 167 PSF SKIN FRICTION
ALLOWABLE LATERAL PASSIVE SOIL BEARING PRESSURE: 267 PSF/FT (AT LEVEL CONDITIONS)

REFERENCE CHAPTER 18, SECTION 1806.8.2.1 AND TABLE 18–1–A OF THE 2001 EDITION OF THE CALIFORNIA BUILDING CODE.

DESIGN SOIL PARAMETERS ARE AS NOTED. ACTUAL ALLOWABLE SOIL PARAMETERS MUST BE VERIFIED BY A GEOTECHNICAL ENGINEER.

ENCOUNTERING SOIL FORMATIONS THAT WILL REQUIRE SPECIAL DESIGN CONSIDERATIONS OR EXCAVATION PROCEDURES MAY EXIST. POLE FOUNDATIONS MAY NEED TO BE REANALYZED ACCORDING TO THE SOIL CONDITIONS THAT EXISTS.

IF ANY DISCREPANCIES OR INCONSISTENCIES ARISE NOTIFY THE ENGINEER OF SUCH DISCREPANCIES. FOUNDATIONS WILL THEN BE REVISED ACCORDINGLY.

ALL PIERS AND CONCRETE BACKFILL MUST BEAR ON AND AGAINST FIRM, UNDISTURBED SOIL.

ALL EXCAVATIONS MUST BE FREE OF LOOSE SOIL AND DEBRIS PRIOR TO FOUNDATION INSTALLATION AND PLACEMENT OF CONCRETE BACKFILL. CASING MAY BE REQUIRED IF CASING OCCURS.

ALL EXCAVATIONS MUST BE FREE OF WATER OR CONCRETE SHALL BE PLACED WITH A TREMIE PIPE IN ACCORDANCE WITH ACI STANDARD 304. CONCRETE PLACE BY THE TREMIE METHOD SHALL HAVE MINIMUM ULTIMATE STRENGTH OF 1,000 PSI GRATER THAN REQUIRED UNDER "CONCRETE BACKFILL" BELOW.

CONCRETE BACKFILL

CONCRETE BACKFILL SHALL HAVE A MINIMUM ULTIMATE COMPRESSIVE STRENGTH AT 28 DAYS OF 3,000 PSI. SPECIAL INSPECTION OF CONCRETE IS NOT REQUIRED. (3,000 PSI CONCRETE IS SPECIFIED FOR EARLY POLE ERECTION, NOT FOR STRUCTURAL DESIGN PURPOSES)

CONCRETE BACKFILL SHALL ATTAIN A MINIMUM STRENGTH OF 2000 PSI PRIOR TO STEEL POLE ERECTION.

USE TYPE II PORTLAND CEMENT OR AS RECOMMENDED BY THE GEOTECHNICAL ENGINEER.

MIX IN CONFORMANCE WITH ASTM C–94.

AGGREGATES PER ASTM C–33. (1" MAX. AGG. SIZE)

PLACE CONCRETE IMMEDIATELY AFTER COMPLETION OF EXCAVATION AND INSPECTION BY THE GEOTECHNICAL ENGINEER, NO EXCAVATIONS SHALL BE LEFT UNPROTECTED OR OPEN OVERNIGHT.

CONCRETE SHALL BE PLACED IN ONE CONTINUOUS OPERATION (NO CONSTRUCTION JOINT) WITH SPECIAL EQUIPMENT WITH A MAXIMUM FREEFALL OF 5 FT AND TO PREVENT CONCRETE FROM STRIKING THE SIDES OF THE EXCAVATION. VIBRATE TOP 5 FT.

MISCELLANEOUS

FIXTURES MUST BE LOCATED TO MAINTAIN 10'–0" MINIMUM HORIZONTAL CLEARANCE FROM ANY OBSTRUCTION.

POLES, FIXTURES, PRECAST BASES, ELECTRICAL ITEMS, PLATFORMS, SPECIFICATIONS, AND INSTALLATION PER MUSCO LIGHTING, INC.

FIXTURE: EPA = 2.4 MAX. SQ FT; WEIGHT=40 LBS (PER MUSCO LIGHTING, INC.)

DATE: 12/09/05 — SHEET C1 OF 1

R.L. FOLEY & ASSOCIATES, INC.
STRUCTURAL ENGINEERS
25652 ASHBY WAY
LAKE FOREST, CALIFORNIA 92630

MUSCO LIGHTING, INC.
2107 STEWART ROAD
MUSCOTINE, IOWA 52761

POLE SUPPORT FOUNDATION
REID PARK SOFTBALL/SOCCER FIELD LIGHTING
RIVERSIDE, CA

BALLFIELD POLE FOOTING STRUCTURAL DETAIL (A)
N.T.S.

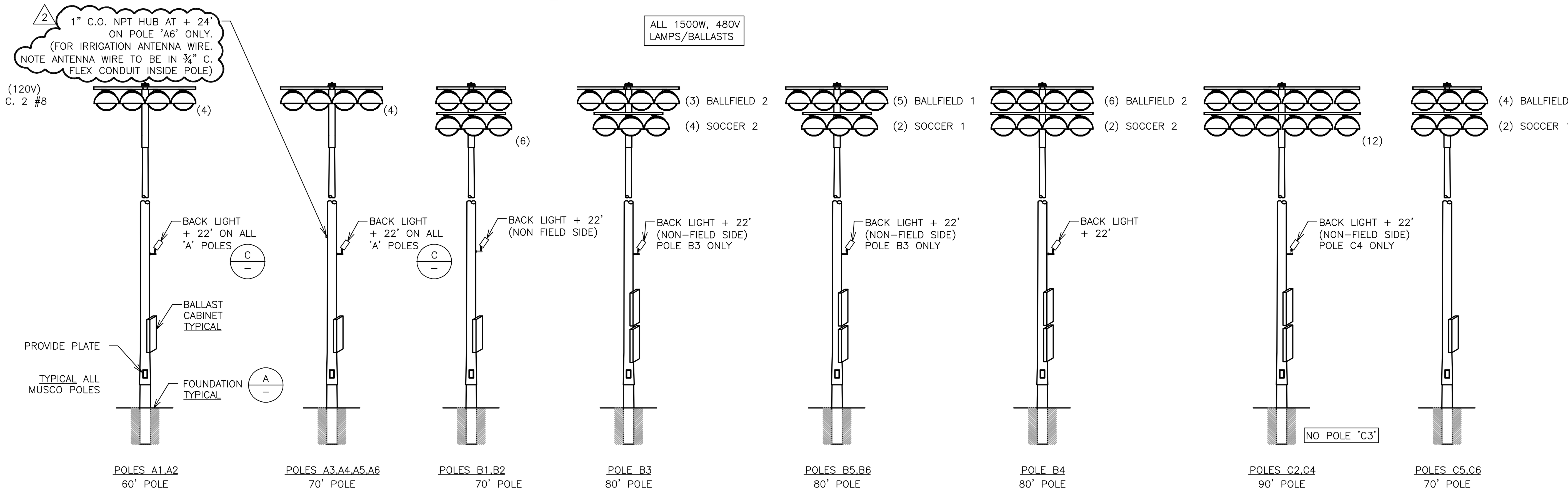

BALLFIELD POLE CONFIGURATION (D)
N.T.S.

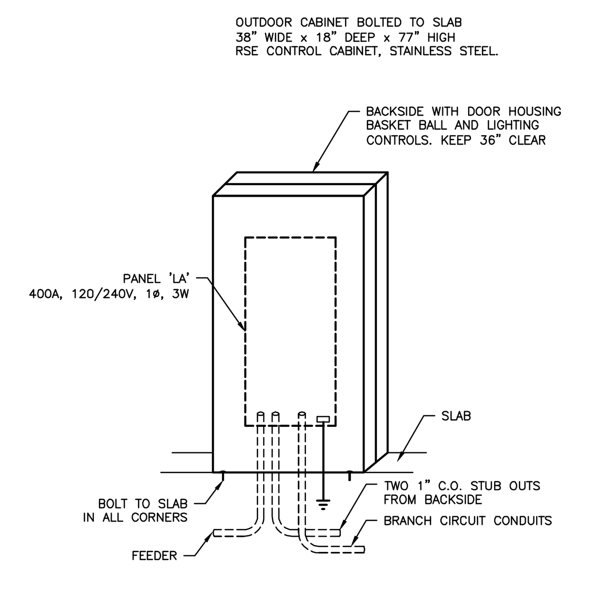

CABINET 'LA' (H)
N.T.S.

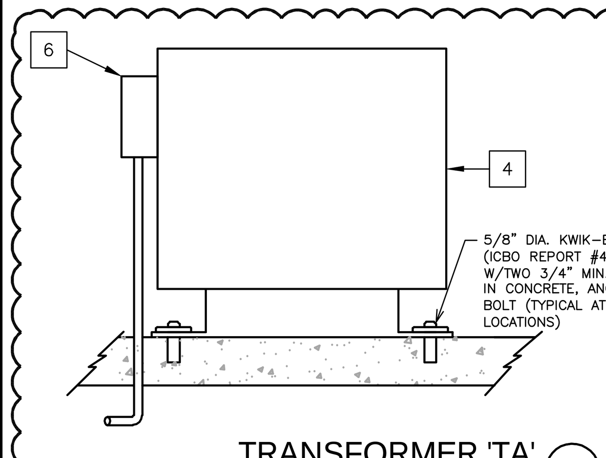

TRANSFORMER 'TA' (G)
N.T.S.

MOUNTED IN 'MSD'

PANEL: 'HB' — PANEL VOLTAGE: 480/277 3ϕ 4 W; BUS: 400A; MAINS: MLO; AIC RATING: 14,000; DATE: 07/18/06 TIME: 10:31:55; JOB: 1944
CIRCUIT CODE: blank or N : NON–CONTINUOUS; L : LONG–CONTINUOUS; R : DEMANDABLE RECEPTACLES; K : KITCHEN NO. OF EQUIPMENT: 0

CKT NO	CODE	TRIP	POLE	DESCRIPTION	(NOTE)	M	R	L	ΦA	ΦB	ΦC	ΦA	ΦB	ΦC	L	R	M	(NOTE)	DESCRIPTION	TRIP	POLE	CODE	CKT NO
1	L	30	1	WALKWAY	(A)			15	4500			5520			12			(B)	BASKETBALL CT 1	40		L	2
3	L	30	1	PARKING EAST	(A)			14		4340			1840		4				BASKETBALL CT 2		2	L	4
5	L	20	1	PARKING WEST	(A)			4			1240			5520	12			(B)	BASKETBALL CT 3	40		L	6
7	L	20	1	PLAYGROUND	(A)			3	2700			1840			4				BASKETBALL CT 4		2	L	8
9	L	20	1	SHELTERS (2)	(A)			4		400									SPARE	20	1		10
11		20	1	SPARE															SPARE	20	1		12
13		20	1	SPARE								1650						(A)	B6 SOCCER 2	20		L	14
15		20	1	SPARE									1650						–		2	L	16
17	L	20		A5 3	(A)			2			2475			2475	3			(A)	C5 4	20		L	18
19	L			–				2	1650			2475			3				–			L	20
21	L		3	–				2		1650			1650		2				–		3	L	22
23	L	20		A6 3	(A)			2			1050			2475	3			(A)	C6 4	20		L	24
25	L			–				2	1650			2475			3				–			L	26
27	L		3	–				2		1650			1650		2				–		3	L	28
29	L	20		B5 5	(A)			3			2475			1650				(A)	B5 SOCCER 2	20		L	30
31	L			–				4	3300			1650							–		2	L	32
33	L		3	–				3		2475			1650					(A)	C5 SOCCER 2	20		L	34
35	L	20		B6 5	(A)			3			2475			1650					–		2	L	36
37	L			–				4	3300			1650						(A)	C6 SOCCER 2	20		L	38
39	L		3	–				3		2475			1650						–		2	L	40
41	L	20	1	BACKLIGHT	(A)			2			500												42

PHASE TOTALS: ΦA: 34360 ΦB: 23080 ΦC: 23985

TOTAL CONNECTED VA	81425
CONNECTED VA (CODE N)	0
CONNECTED VA (CODE L)	81425
CONNECTED VA (CODE R)	0
CONNECTED VA (CODE K)	0
PANEL CONNECTED KVA	81.4
PANEL DEMAND KVA	101.8
PANEL DEMAND AMPS	122.4
HIGH ϕ AMPS W/LCL	155.1

PANEL NOTES:
(A) CIRCUIT CONTROLLED THRU MUSCO CONTROL–LINKS CONTACTOR.
(B) BASKET BALL CONTROLLED BY ONE MUSCO CONTROL–LINKS CONTACTOR AND BY T AND C LOCAL ON–OFF SYSTEM PER DETAIL 'D', E–2
(C) HB, 41 AND HA, 32 (BACK LIGHTS) TO CONNECT TO ONE MUSCO CONTACTOR ZONE.

MOUNTED IN 'MSD'

PANEL: 'HA' — PANEL VOLTAGE: 480/277 3ϕ 4 W; BUS: 400A; MAINS: MLO; AIC RATING: 14,000; DATE: 12/05/05 TIME: 12:48:45; JOB: 1944
CIRCUIT CODE: blank or N : NON–CONTINUOUS; L : LONG–CONTINUOUS; R : DEMANDABLE RECEPTACLES; K : KITCHEN NO. OF EQUIPMENT: 0

CKT NO	CODE	TRIP	POLE	DESCRIPTION	(NOTE)	M	R	L	ΦA	ΦB	ΦC	ΦA	ΦB	ΦC	L	R	M	(NOTE)	DESCRIPTION	TRIP	POLE	CODE	CKT NO
1	L	20		A1 3	(A)			2	1650			3300			4			(A)	B4 6	30		L	2
3	L			–				2		1650			3300		4				–			L	4
5	L		3	–				2			1650			3300	4				–		3	L	6
7	L	20		A2 3	(A)			2	1650			6600			8			(A)	C2 12	40		L	8
9	L			–				2		1650			6600		8				–			L	10
11	L		3	–				2			1650			6600	8				–		3	L	12
13	L	20		A3 3	(A)			2	1650			4950			4			(A)	C4 9	30		L	14
15	L			–				2		1650			4950		4				–			L	16
17	L		3	–				2			1650			4950	4				–		3	L	18
19	L	20		A4 3	(A)			2	1650			4125			5			(A)	C2 8	30		L	20
21	L			–				2		1650			4950		6				–			L	22
23	L		3	–				2			1650			4125	5				–		3	L	24
25	L	30		B1 6	(A)			4	3300			6600			8			(A)	C4 12	40		L	26
27	L			–				4		3300			6600		8				–			L	28
29	L		3	–				4			3300			6600	8				–		3	L	30
31	L	30		B2 6	(A)			4	3300			2700			9			(A)	BACKLIGHT	20	1	L	32
33	L			–				4		3300			3300					(A)	B3 SOCCER 4	20		L	34
35	L		3	–				4			3300			3300					–		2	L	36
37	L	30		B3 6	(A)			5	4125			1650						(A)	B4 SOCCER 2	20		L	38
39	L			–				5		4125			1650						–		2	L	40
41	L		3	–				4			3300												42

PHASE TOTALS: ΦA: 47250 ΦB: 48675 ΦC: 45375

TOTAL CONNECTED VA	141300
CONNECTED VA (CODE N)	0
CONNECTED VA (CODE L)	141300
CONNECTED VA (CODE R)	0
CONNECTED VA (CODE K)	0
PANEL CONNECTED KVA	141.3
PANEL DEMAND KVA	176.6
PANEL DEMAND AMPS	212.5
HIGH ϕ AMPS W/LCL	219.7

PANEL NOTES:
(A) CIRCUIT CONTROLLED THRU MUSCO CONTROL–LINKS CONTACTOR.

PANEL: 'LA' — PANEL VOLTAGE: 240/120 1ϕ 3 W; BUS: 400A; MAINS: 400A/2P; MOUNTING: SURFACE; DATE: 01/25/06 TIME: 08:31:43; JOB: 1944
CIRCUIT CODE: blank or N : NON–CONTINUOUS; L : LONG–CONTINUOUS; R : DEMANDABLE RECEPTACLES; K : KITCHEN NO. OF EQUIPMENT: 0

CKT NO	CODE	TRIP	POLE	DESCRIPTION	(NOTE)	M	R	L	ΦA	ΦB	ΦA	ΦB	L	R	M	(NOTE)	DESCRIPTION	TRIP	POLE	CODE	CKT NO
1		20	1	SHELTERS (2)			2	4	700											L	2
3		20	1	OB1			2			500											4
5		20	1	OB2			2		500												6
7		20	1	OB3			2			500											8
9		20	1	CONTROL – BB CT'S	1				500												10
11		20	1	CONTROL – MUSCO	1					1500											12
13		20	1	SPARE	1				1500												14
15		20	1	SPARE	1					1500											16
17		20	1	SPARE	1				1500												18
19		20	1	SPARE	1					1500											20
21		20	1	IRRIG.		2			100												22
23		20	1	SHELTER			2			140											24
25		20	1	SPARE																	26
27		20	1	SPARE								180			2		IRRIG. CONT.	20	1		28
29		20	1	SPARE							180				1		TEL.	20	1		30
31		20	1	SPARE																	32
33											9500						CABINET 'CA'	100			34
35												9500					–		2		36
37											9500						CABINET 'CB'	100			38
39		100		RESTROOM						4500		9500					–		2		40
41			2	–					4500												42

PHASE TOTALS: ΦA: 33800 ΦB: 33020

TOTAL CONNECTED VA	66820
CONNECTED VA (CODE N)	64200
CONNECTED VA (CODE L)	2620
CONNECTED VA (CODE R)	0
CONNECTED VA (CODE K)	0
PANEL CONNECTED KVA	66.8
PANEL DEMAND KVA	67.5
PANEL DEMAND AMPS	281.1
HIGH ϕ AMPS W/LCL	285.9

PANEL NOTES:

SPECIAL NOTES

A. ALL PANEL SCHEDULES TO MATCH EXACT FIELD INSTALLATION (AS–BUILT) CONDITIONS AND PLANS. PROVIDE "CORRECT" PANEL SCHEDULE INSIDE PANEL WITH CORRECT CIRCUITS, ELECTRICAL LOADS AND FEEDER SIZE AND WIRE TYPE TO PANEL. (ie: FEEDER= NO. 3/0 COPPER, THHN).

B. ALL PLUG–IN OUTLET DEVICES WITH GROUND OUTLET SHALL HAVE GROUND CONNECTION AT TOP OF DEVICE + 15" TO CENTER TO TOP OUTLET.

C. CONTRACTOR SHALL NOT INSTALL MORE WIRES IN A CONDUIT THAN SHOWN ON PLANS. NUMBER OF WIRES IN A CONDUIT ARE BASED ON DERATING VALUES IN NATIONAL ELECTRICAL CODE. IF CONTRACTOR ELIMINATES VARIOUS CONDUITS SHOWN ON PLANS AND INSTALLS ADDITIONAL WIRES IN A CONDUIT, WITHOUT PRIOR APPROVAL, THE WIRING WILL BE CORRECTED AT CONTRACTOR COST.

D. ALL OVERCURRENT PROTECTION DEVICES (CIRCUIT BREAKERS, SWITCHES) SHALL BE U.L. LISTED FOR 75° C. TERMINATIONS. ALL WIRE RATING AMPACITIES BASED ON 75° C. (THHN/THWN) COPPER. NO ALUMINUM WIRE ALLOWED.

E. ALL BRANCH CIRCUIT JUNCTION BOXES TO COMPLY WITH THE 1999 NEC 370–16 FOR SIZE RELATED TO NUMBER OF WIRES INSIDE THE JUNCTION BOX.

F. CONTRACTOR SHALL SEND SWITCHBOARD SHOP DRAWING TO POWER CO. REPRESENTATIVE FOR APPROVAL BY POWER CO. AND CONFIRMATION THAT SWITCH GEAR COMPLIES WITH POWER CO. REGULATIONS.

G. ALL CIRCUIT BREAKER TO BE 'BOLT ON' TYPE.

H. CONTRACTOR SHALL OBTAIN FROM ELECTRICAL ENGINEER ELECTRICAL FILE (AUTO–CAD) OF ELECTRICAL PLANS AND PROVIDE 'AS–BUILT' ELECTRICAL FILES TO OWNER AND ENGINEER INDICATING ALL AS–BUILT REVISIONS FILES WITH ALL CHANGES/ADDITIONS CLEARLY SHOWN. PLANS TO BE NOTED IN LOWER RIGHT CORNER OF EACH SHEET: "AS–BUILT PLANS" (WITH DATE AND CONTRACTORS NAME, ADDRESS, PHONE NO. AND SIGNED). NO EXCEPTIONS.

MAIN SWITCHBOARD 'MSD' NOTES:

A. SERIES RATED SYSTEM:

1. THE ENTIRE MAIN SWITCHBOARD AND ELECTRICAL PANEL SYSTEM SHALL BE UL LISTED FOR SERIES RATING OF 50,000A RMS SYMM WHEN USED WITH DOWN STREAM SERIES RATED CIRCUIT BREAKERS AND, OR DEVICES.

2. SERIES CONNECTED SYSTEM HAS BEEN SPECIFIED FOR THE TYPE OF FUSE–CIRCUIT BREAKER AND CIRCUIT BREAKER–CIRCUIT BREAKER COMBINATION. THE ELECTRICAL CONTRACTOR SHALL SUBMIT TO ELECTRICAL ENGINEER A COPY OF DOCUMENTATION FROM SWITCH GEAR MANUFACTURER, THAT CONTRACTOR PROPOSES TO USE, AND DEMONSTRATE/DOCUMENT, THE COMPLIANCE OF THEIR SUBMITTED COMBINATION. THE EQUIPMENT ENCLOSURE SHALL BE LEGIBLY MARKED ON THE FIELD TO INDICATE THE EQUIPMENT HAS BEEN APPLIED WITH A SERIES COMBINATION RATING. THE MARKING SHALL BE READILY VISIBLE AND STATE "CAUTION–SERIES RATED SYSTEM" PER N.E.C. ARTICLE 110–22. 42,000A. AVAILABLE IDENTIFIED REPLACEMENT COMPONENT REQUIRED. IF PROPOSED OCP DEVICE TYPE IS DIFFERENT THAN SPECIFIED ON PLANS, CONTRACTOR SHALL RESUBMIT SUBSTITUTED OCP DEVICE CATALOG NUMBER TO BUILDING DEPARTMENT AS A CHANGE TO CONSTRUCTION DRAWINGS.

3. PROVIDE RED ENGRAVED PLATE WITH WHITE LETTERS: "SWITCHBOARD IS SERIES RATED. REPLACEMENT DEVICES SHALL BE OF SAME MANUFACTURER, TYPE DESIGNATION AND AN EQUAL OR GREATER INTERRUPTING CAPACITY."

B. COPPER BUSSING SHALL BE 1000A/SQ. INCH FOR 100% RATING. ALUMINUM BUSSING SHALL BE 750A/SQ. INCH FOR 100% RATING.

C. ALL SECTIONS OF SWITCHBOARD (HORIZONTAL AND VERTICAL) TO BE FULLY BUSSED FOR FUTURE ADDITIONS.

D. ENTIRE EXTERIOR CABINET SWITCHBOARD TO BE STAINLESS STEEL.

E. SWITCHBOARD IS FREE STANDING OUTDOOR UNIT. BOLT TO CONCRETE SLAB WITH 1/2" ø PHILLIPS RED HEAD WEDGE ANCHORS 4" EMBEDMENT. CAT. NO. WS–1252 (4) BOLTS PER UNIT (2 AT EACH END). SEE DETAIL 'E', SHT. E–6.

F. CONTRACTOR SHALL SEND SWITCHBOARD SHOP DRAWING TO RIVERSIDE POWER CO. REPRESENTATIVE FOR APPROVAL BY POWER CO. AND CONFIRMATION THAT SWITCH GEAR COMPLIES WITH POWER CO. REGULATIONS.

G. ALL DIMENSIONS OF SWITCH GEAR ARE BASED ON RSE–SIERRA (714/529–3471). CONTRACTOR IS RESPONSIBLE FOR ANY SUBSTITUTION OF EQUIPMENT WITH GREATER DIMENSIONS THAN MANUFACTURED BY RSE–SIERRA AND FOR ALLOWED SPACE AND CODE CLEARANCES.

H. THE LANDING LUGS IN THE UNDERGROUND PULL SECTION, SIZED PER MAIN SWITCH, ON SERVICE SECTION CONNECTED LOAD. DISCONNECT LINKS FROM LANDING LUGS THE UNDERGROUND PULL SECTION TO EACH SERVICE SECTION BUS PER UTILITY COMPANY SERVICE GUIDE (U.C.S.G.).

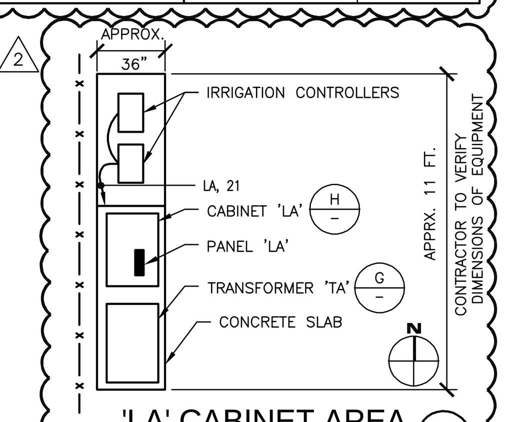

'LA' CABINET AREA (F)
N.T.S.

REEDCORP ENGINEERING
CONSULTING ELECTRICAL ENGINEERS
2061 Business Center Drive, Suite 110
Irvine, CA 92612
(949) 752–1278 FAX: (949) 752–1287
E–MAIL : ee@reedcorp.net
04–216–1944

RHA LANDSCAPE ARCHITECTS PLANNERS, INC.
3612 MISSION INN AVE
RIVERSIDE, CALIFORNIA 92501
LIC. #1512
PH. (909) 781–1930
FAX (909) 686–8091

© R H A Landscape Architects –Planners, Inc. expressly reserves its common law copyright and other property rights in these plans. These plans are not to be reproduced, changed or copied in any form or manner whatsoever nor are they to be assigned to any third party without first obtaining the express written permission.

CLIENT: THE CITY OF RIVERSIDE
PARK AND RECREATION DEPT.
3900 Main Street
Riverside, California 92522

PROJECT: Reid Park Expansion
Community Park
Orange St. and Garner Rd.

REVISIONS	DATE	BY
1 MISC.	1/26/06	RR
2 MISC.	7/18/06	RR
3 MISC.	1/15/07	RR

REGISTERED PROFESSIONAL ENGINEER THOMAS E. HARTMAN No. 7531 Exp: 9/30/08 ELECTRICAL STATE OF CALIFORNIA

[One Inch on Original Sheet] Drawing File: Z:\SDSKPROJ\1944\Reid Park\Sheets\ E-4 Musco Electrical Details Sep 10, 2007 - 12:28pm

SHEET TITLE: MUSCO DETAILS AND ELECTRICAL DETAILS

DESIGNED	MR
DRAWN	MR
CHECKED	RR
DATE	01-17-06
SCALE	AS NOTED
JOB NO.	

SHEET E–4 OF 6 SHEETS

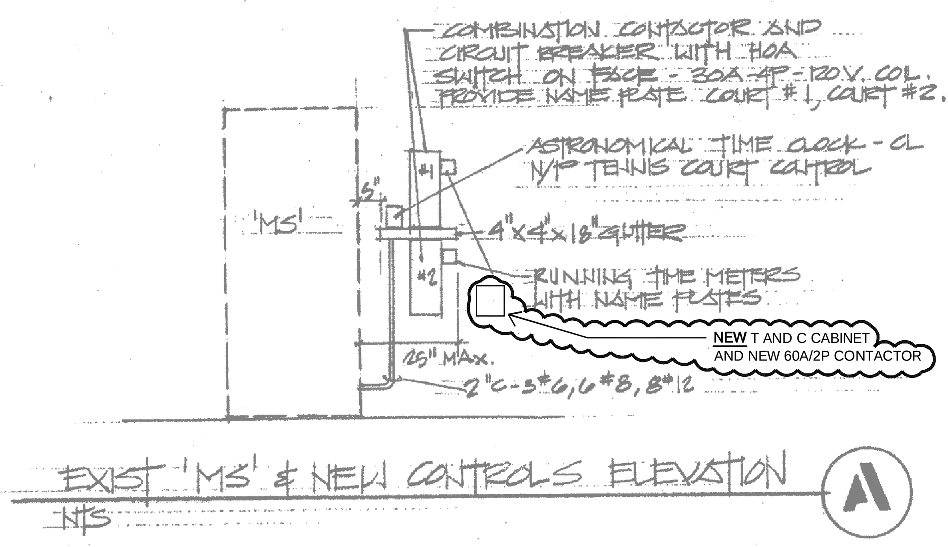

EXIST 'MS' & NEW CONTROLS ELEVATION (A)
NTS

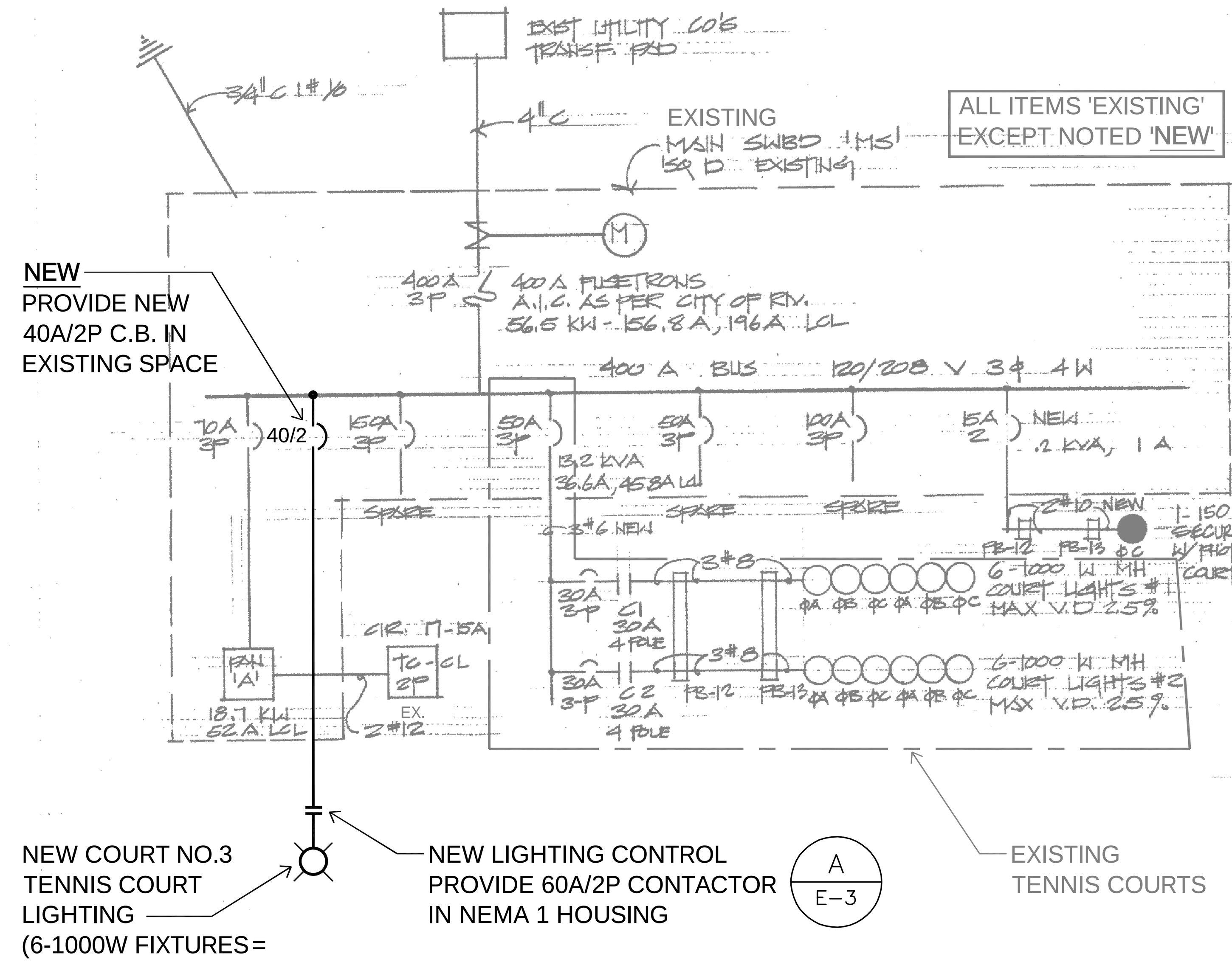

EXISTING ONE LINE DIAGRAM - "MS" (B)
N.T.S.

SYMBOL LIST (EXISTING)

- UNDERGROUND PVC RIGID CONDUIT 30" BELOW GRADE W/ YELLOW PLASTIC TAPE 12" ABOVE CONDUIT.
- PB — UNDERGROUND PULL BOX (C/E)
- EXISTING 120/208 V MAIN SWITCH BOARD
- EXISTING CONTROLS FOR TENNIS COURTS
- TC1 — 25' ROUND GALV. STEEL POLE WITH 1-1000 W TENNIS COURT METAL HALIDE FIXTURE (208V) (D/E-5)
- TC2 (1) — 25' ROUND GALV. STEEL POLE WITH 2-1000 W TENNIS COURT METAL HALIDE FIXTURES (208V) (E/E-5)
- WATER PROOF PUSHBUTTON ON TENNIS COURT POLE (ONE PUSHBUTTON FOR EACH COURT)
- (2) — 1-150 W HIGH PRESSURE SODIUM FIXTURE (208V.) W/ PHOTO CONTROL ON SEPARATE CIR. FOR SECURITY LIGHT
- RGS — RIGID GALVANIZED STEEL CONDUIT.

NOTES (EXISTING SYSTEM)

1. EXISTING 2" CONDUIT STUB OUT AND EXTENDED INTO NEW PULL BOX. 9#8, 2#10, 9#12 & #8 GND. (EXISTING)
2. EXISTING 1 1/2" C., 6#8, 2#10 SECURITY, 6#12 CONTROL & #8 GND. (16)
3. EXISTING 1"C., 3#8, AND #8 GND. UNDERGROUND.
4. EXISTING 3/4"C., 2#8, #8 GND. UNDERGROUND.
5. EXISTING 1"C., 4#8, #8 GND UNDERGROUND. (16)
6. EXISTING 1 1/4 C, 6#8, #8 GND UNDERGROUND. (16)
7. DETERMINE LOCATION OF SPRINKLER HEADS AND PLACE PULL BOX TO MISS SPRINKLERS AND PIPE.
8. JACK OR BORE CONDUIT UNDER WALK.
9. WELD 1/4" GALV STEEL PLATE 10"x4" TO POLE TC3 FOR WATER PROOF PUSH BUTTONS. INSTALL PUSH BUTTONS ONE EACH SIDE OF POLE. INSTALL 3/4" BUSHED COUPLING ON EACH SIDE OF POLE IN CENTER OF PLATE - SECURE PUSH BUTTON WITH 4 BOLTS, TAP PLATE FOR BOLTS USE STAINLESS STEEL BOLTS. PUSHBUTTONS SHALL BE IN CAST BOX WITH TAMPER PROOF BOLTS SECURING CAST COVER TO CAST BOX.
10. EXISTING 1 1/2"C.O. WITH PULL LINE UNDERGROUND.
11. 1"C.O. STUB OUT 5' BEYOND WALKWAY AND CAP FOR FUTURE COURT #3.
12. EXISTING 1 1/2"C. 3#8, #8 GND & PULL LINE UNDERGROUND.
13. EXISTING 1"C 2#8, #8 GND & PULL LINE UNDERGROUND
14. TACKWELD AFTER FINAL TORQUE ON NUTS.
15. TACK WELD SHUT AFTER FINAL INSPECTION BY P&R

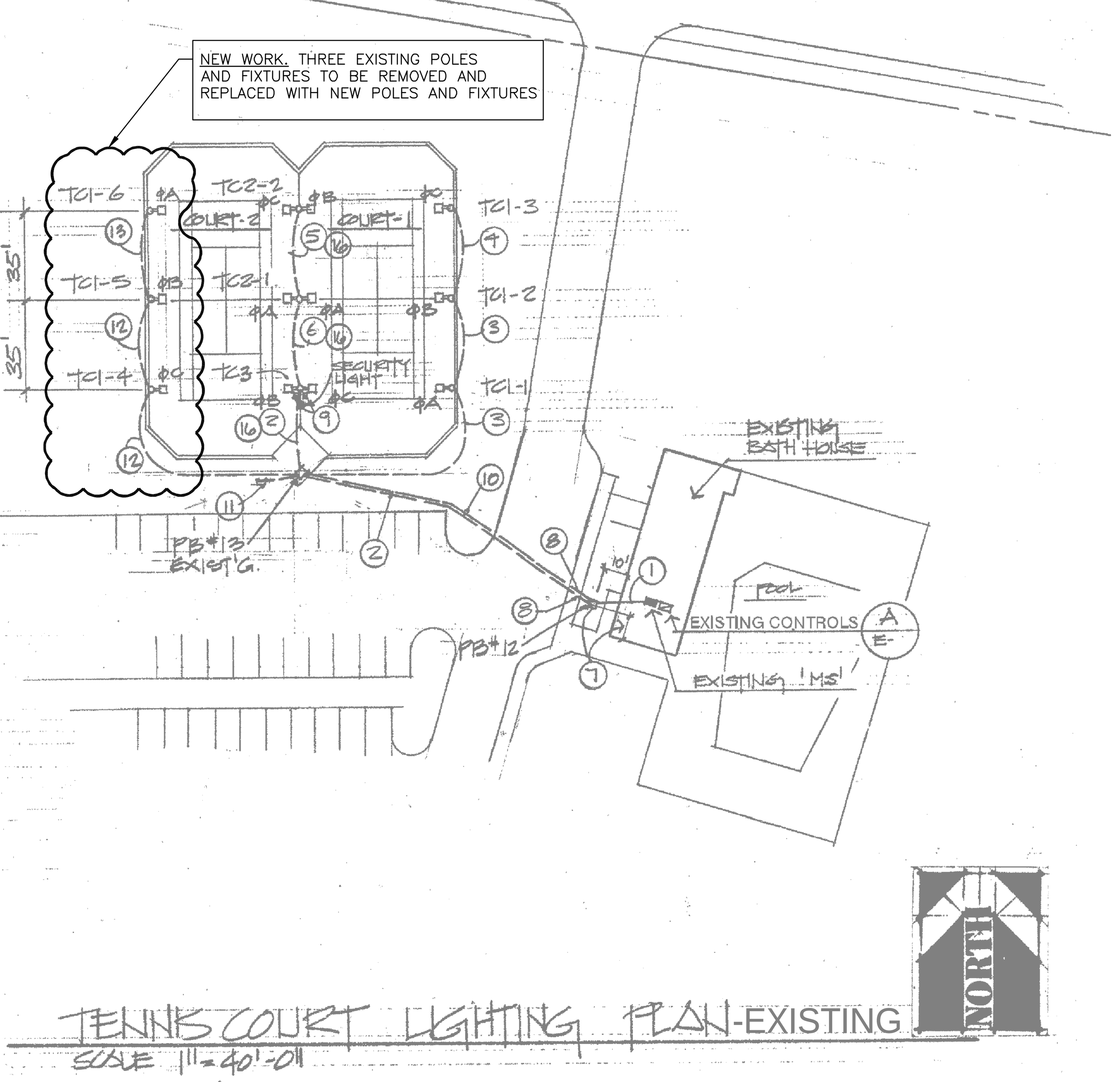

TENNIS COURT LIGHTING PLAN-EXISTING
SCALE 1"=40'-0"

REFERENCE NOTES: (EXISTING)

1. TENNIS COURT FIXTURES ARE 1000 WATT METAL HALIDE, 208 VOLT HPF BALLAST, SPAULDING CAT. NO. CET-1000-M-208-DB
2. SECURITY FIXTURE IS TENNIS COURT FIXTURE EXCEPT 150 WATT H.P.S. WITH BUILT-IN PHOTO CONTROL, SPAULDING CAT. NO. CET-150-HPS-208-DB-PC

NEW
T AND C SYSTEM OPERATION AND SPECIFICATIONS: (FOR NEW COURT NO. 3 ONLY)

A. CONTROL PANEL WITH:

1. 24 HOUR TIME CLOCK TO DETERMINE WHEN THE SYSTEM WILL BE IN OPERATION. SET HOURS PER CITY REQUIREMENTS.
2. (1) ONE HOUR TIMERS TO DETERMINE THE LENGTH OF TIME THE LIGHTS WILL BE ON. EACH TIME THE OPERATOR PRESSES THE TC 1001 PUSH BUTTON "ON" THE TIME WILL BE RESET TO ONE HOUR. BUZZER SOUNDS A ONE MINUTE WARNING BE RESET TO ONE HOUR. BUZZER SOUNDS A ONE MINUTE WARNING BEFORE THE LIGHTS ARE TO GO OUT. (THE BUZZER SHALL HAVE A VOLUME CONTROL.)
3. CONTROL RELAYS TO DE-ENERGIZE THE LIGHTING CONTACTORS WHEN THE 24 HOUR TIMER SHUTS DOWN THE SYSTEM. THIS ALLOWS THE ONE HOUR TIMER TO COMPLETE ITS CYCLE READY TO START OPERATION THE NEXT DAY WITHIN TIME CLOCK SETTING.
4. TERMINAL BLOCKS FOR ELECTRICAL CONTACTORS TO HOOK-UP.
   THE TC 1000-* TO BE MOUNTED ON PANELS ONLY AS FOLLOWS:
   - ☒ TC 1000-4 ON A HOFFMAN PANEL A24P24(21X21) - (BACKBOARD ONLY)
   - ☐ TC 1000-8 ON A HOFFMAN PANEL A24P24(33X21) - (BACKBOARD ONLY)
   - ☐ TC 1000-12 ON A HOFFMAN PANEL A24P24(45X21) - (BACKBOAD ONLY)
5. PANEL ENCLOSURE:
   - ☒ MOUNT T AND C PANEL IN NEMA 1 ENCLOSURE WITH PAD LOCKABLE DOOR VERIFY EXACT SIZE REQUIRED.

B. EXTERNAL DEVICES

1. THE TC 1001 IS THE "ON-OFF" PUSH BUTTON STATION TO MOUNT ON POLE.
2. THE TC 1002 IS THE WARNING HORN AND PILOT LIGHT. THE HORN WILL SOUND AND THE PILOT LIGHT WILL LIGHT APPROXIMATELY ONE MINUTE BEFORE THE ONE HOUR TIMER (COURT LIGHTS) ARE ABOUT TO TIME OUT. THE HORN WILL SOUND ONLY FOR THE TIME SET ON THE TIME DELAY IN THE CONTROL CABINET. MOUNT ON POLE.
3. ONE TC 1001 AND ONE TC 1002 ARE REQUIRED FOR EACH COURT.

C. T AND C INDUSTRIES
1121 NORTH CEDAR STREET
GLENDALE, CA 91207
818/240-3600
FAX: 818/547-9359

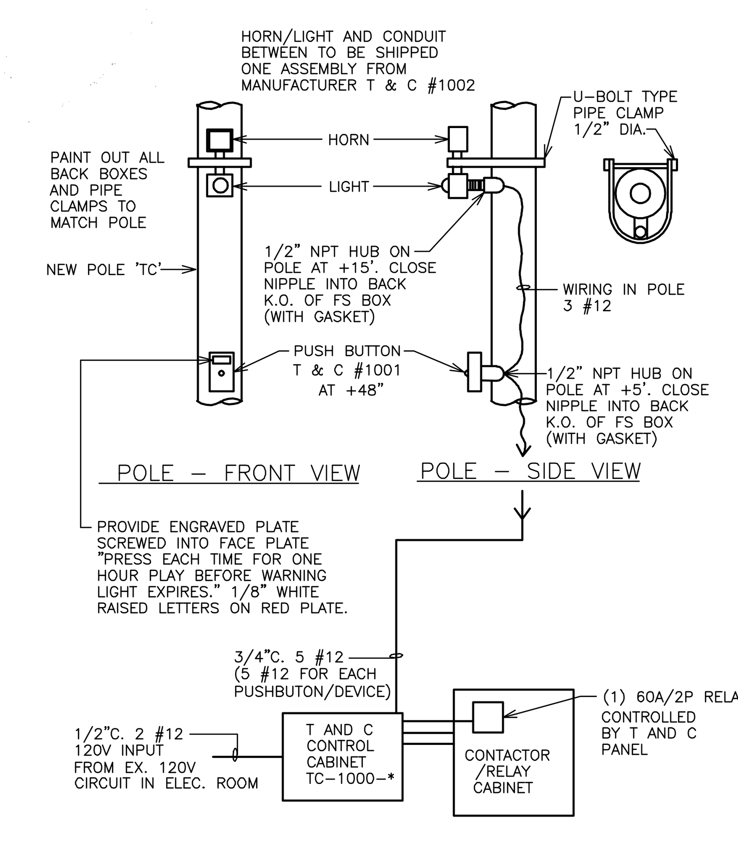

'NEW' T AND C CONTROL (NEW TENNIS COURT NO. 3) (C)
N.T.S.

NOTE: NEW TENNIS COURT NO. 3 TO BE ON A SEPARATE LIGHTING CONTROL THAN EXISTING COURTS 1 AND 2

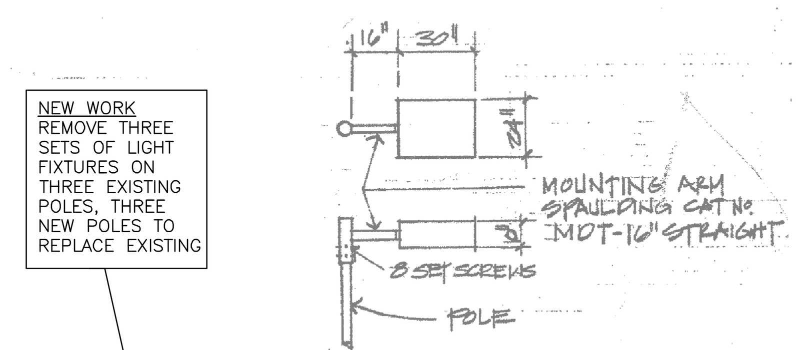

POLE TOP, POLES TC 1 (D)
NTS NEW (TO MATCH TC1 POLES)

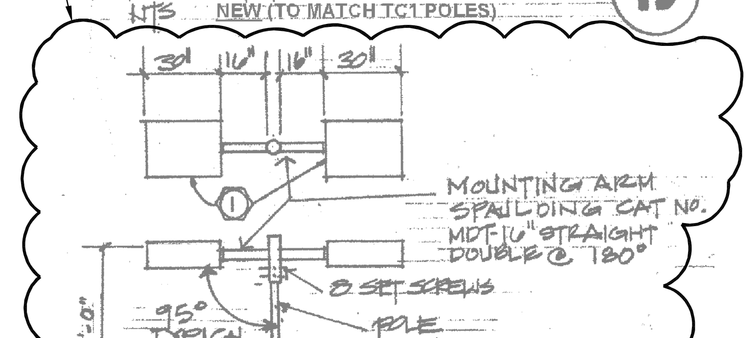

POLE TOP, POLES TC 2 (E)
NTS NEW TO MATCH EXISTING

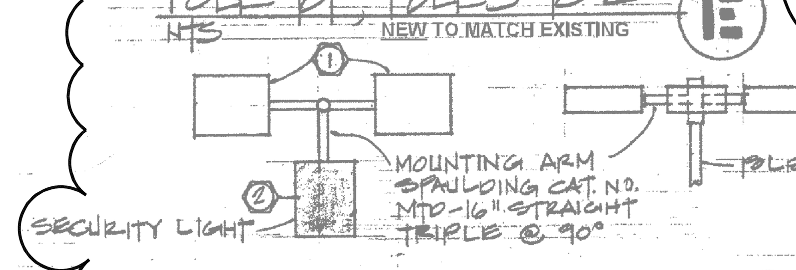

POLE TOP, POLE TC 3 (F)
NEW (TO MATCH TC3 POLE)

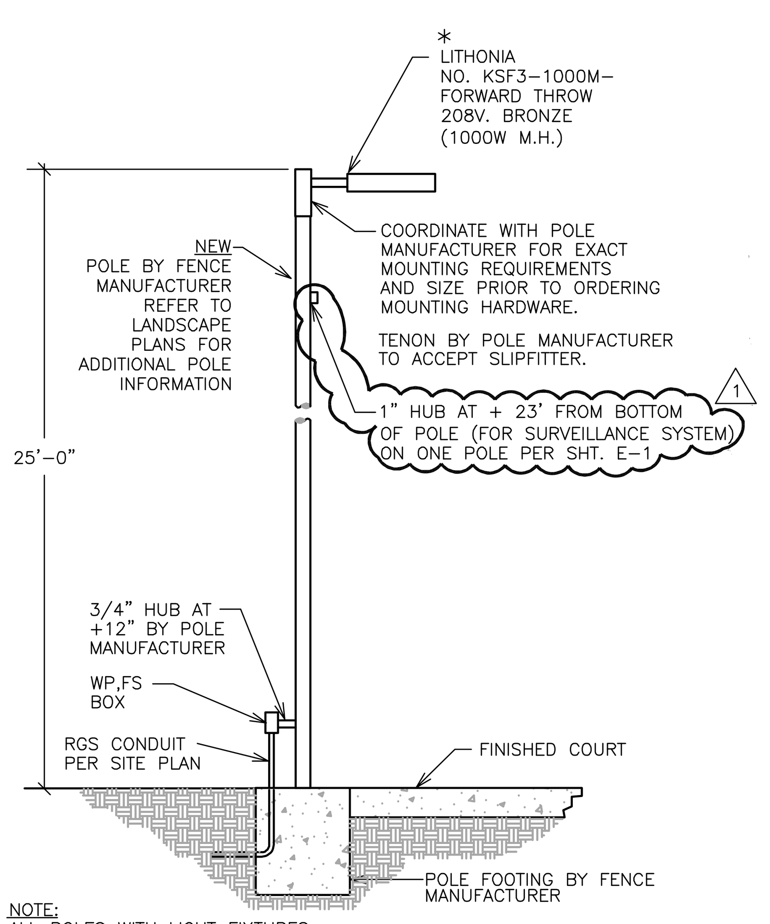

NOTE:
ALL POLES WITH LIGHT FIXTURES SHALL HAVE GROUND LUGS ACCESSIBLE.

LIGHT STANDARD 'TB'

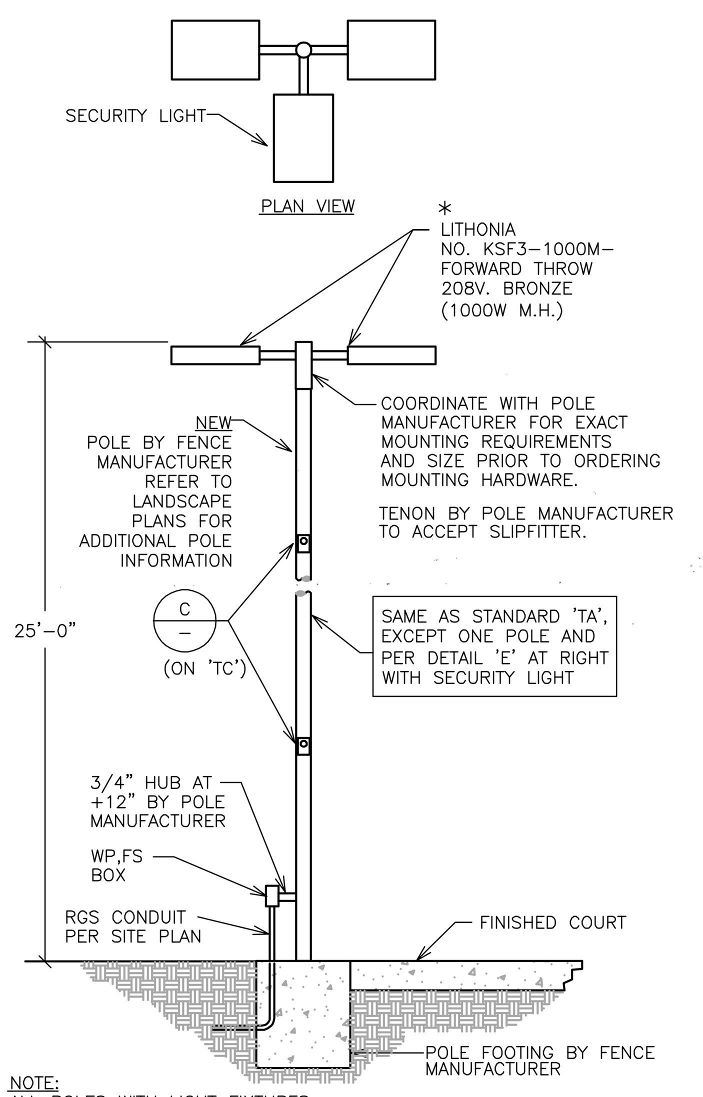

NOTE:
ALL POLES WITH LIGHT FIXTURES SHALL HAVE GROUND LUGS ACCESSIBLE.

LIGHT STANDARD 'TC'

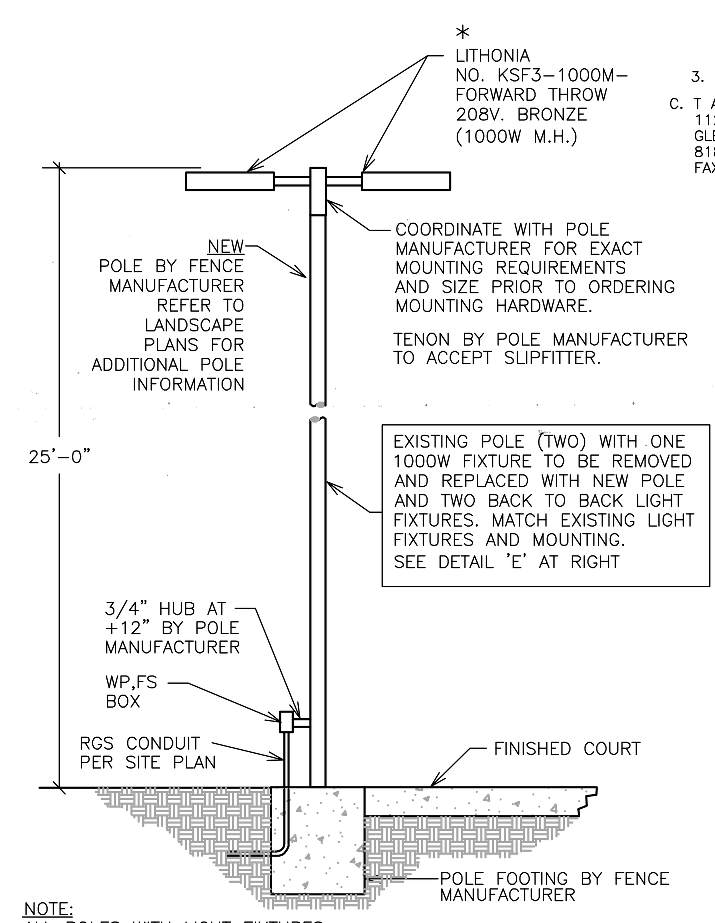

NOTE:
ALL POLES WITH LIGHT FIXTURES SHALL HAVE GROUND LUGS ACCESSIBLE.

LIGHT STANDARD 'TA'

NEW TENNIS COURT POLES/FIXTURES 'TA', 'TB', AND 'TC' (G)
N.T.S.

* LITHONIA IS EQUAL EXCEPT ALL NEW FIXTURES AND MOUNTING TO MATCH EXISTING

NOTE:
ALL ITEMS SHOWN ON THIS SITE PLAN SHEET ARE EXISTING EXCEPT NOTED AS 'NEW'. THIS SHEET IS A COPY OF 12/26/95 CITY PLANS AND FOR CLARIFICATION

REEDCORP ENGINEERING
CONSULTING ELECTRICAL ENGINEERS
2061 Business Center Drive, Suite 110
Irvine, CA 92612
(949) 752-1278 FAX: (949) 752-1287
E-MAIL : ee@reedcorp.net
04-216-1944

RHA LANDSCAPE ARCHITECTS PLANNERS, INC.
3612 MISSION INN AVE
RIVERSIDE, CALIFORNIA 92501
LIC. #1512
PH. (909) 781-1930
FAX (909) 686-8091

© R H A Landscape Architects -Planners, Inc. expressly reserves its common law copyright and other property rights in these plans. These plans are not to be reproduced, changed or copied in any form or manner whatsoever nor are they to be assigned to any third party without first obtaining the express written permission.

CLIENT:
THE CITY OF RIVERSIDE
PARK AND RECREATION DEPT.
3900 Main Street
Riverside, California 92522

PROJECT:
Reid Park Expansion
Community Park
Orange St. and Garner Rd.

REVISIONS	DATE	BY
1 MISC.	1/26/06	RR

Registered Professional Engineer Thomas E. Hartman No. 7531 Exp: 9/30/08 Electrical State of California

[One Inch on Original Sheet] Drawing File: Z:\SDSKPROJ\1944\Reid Park\Sheets\ E-5 Ex. Tennis Court Lighting Sep 10, 2007 - 12:28pm

SHEET TITLE
TENNIS COURT ELECTRICAL PLAN

DESIGNED	MR
DRAWN	MR
CHECKED	RR
DATE	01-17-06
SCALE	AS NOTED
JOB NO.	

SHEET E-5 OF 6 SHEETS

Z:\SDSKPROJ\1944\Reid Park\Sheets\E-5 Ex. Tennis Court Lighting.dwg, E-5 Building, 9/10/2007 12:28:53 PM, marioh, DWF6 ePlot.pc3, Reedcorp Engineering, Inc., Reedcorp Engineering, Inc.

BALLFIELD LIGHTING GENERAL NOTES– EXISTING SITE

A. SECURE EXISTING PLANS FROM CITY (ELECTRICAL, AND THE UTILITIES, IRRIGATION, ETC.) AVOID EXISTING UNDERGROUND ELECTRICAL AND SPRINKLER SYSTEMS WHERE POSSIBLE. REPAIR ALL EXISTING SYSTEMS DAMAGED BY CONSTRUCTION TO CITY'S REQUIREMENT.

B. STAKE OUT EXACT LOCATION OF POLES AND CONDUIT ROUTING WITH CITY PRIOR TO ANY WORK. ANY LOCATION NOT WITHIN 24" OF LOCATION SHOWN ON PLAN SHALL BE NOTIFIED TO ENGINEER AND LIGHTING MANUFACTURER IMMEDIATELY AND PRIOR TO CONSTRUCTION. CITY TO ACCEPT LOCATIONS OF POLES AFTER CITY SITE REVIEW OF POLE LOCATIONS.

C. CONTRACTOR SHALL CAREFULLY REMOVE, STORE, AND REPLACE EXISTING SOD AFTER INSTALLATION IS COMPLETE. ANY EXISTING IRRIGATION PIPING OR OTHER UTILITIES WHICH ARE DAMAGED OR REQUIRE RELOCATION DURING CONSTRUCTION SHALL BE REPLACED TO THE SATISFACTION OF THE CITY.

D. TRENCHING NOTES:
1) TRENCH AROUND PLAYING FIELDS AND NOT ACROSS INTO OUTFIELD PLAYING AREAS EXCEPT AS INDICATED OR UNAVOIDABLE.
2) CONTRACTOR SHALL VERIFY WITH CITY EXACT TYPE AND WEIGHT OF CONCRETE TRUCKS TO BE USED ON ALL TURF AREAS. DO NOT USE TRUCKS WITH WEIGHT NOT APPROVED BY THE CITY.
3) RUTS WHICH ARE MADE WITH CONCRETE TRUCKS NEED TO BE TOP DRESSED WITH SANDY LOAM SOIL MIXED WITH A MULCH AND SEEDED WITH PERENNIAL RYE GRASS (OR AS REQUIRED BY CITY).
4) WHERE TRENCHING SOIL HAS SETTLED, IT WILL REQUIRE TOP SOIL TO BE ADDED, OVER SEEDING, AND TOP DRESSED WITH MULCH.

E. CONTRACTOR TO VISIT EXISTING SITE AND VERIFY ALL EXISTING CONDITIONS.

F. CONTRACTOR TO OBTAIN ALL PERMITS AND INSPECTIONS AS REQUIRED AT NO ADDITIONAL COST TO CITY.

G. VERIFY ALL POLE AND OUTLET LOCATIONS WITH THE CITY BEFORE COMMENCING WORK. POLE AND OUTLET LOCATIONS AND CONDUIT RUNS ARE SHOWN DIAGRAMMATICALLY AND MAY NEED TO BE CHANGED TO SUIT FIELD CONDITIONS. (VERIFY WITH CITY.) SEE NOTE "B" ABOVE.

H. ALL MATERIAL SHALL BE DELIVERED TO THE SITE NEW, IN THEIR ORIGINAL UNBROKEN PACKAGES BEARING APPROVAL BY U.L., NEMA, NBFU, OR ANY OTHER APPROPRIATE AGENCY.

I. PROVIDE TYPE WRITTEN DIRECTORY (LAMINATED AND SEALED) INSIDE EACH PANEL DOOR.

J. ALL WORK SHALL BE CONSTRUCTED IN STRICT ACCORDANCE WITH THE NATIONAL ELECTRICAL CODE (1999 EDITION), AND ALL APPLICABLE STATE, COUNTY, AND LOCAL CODES APPLYING TO THE PROPOSED CONSTRUCTION. IN THE EVENT OF A CONFLICT BETWEEN THE ABOVE AND THESE PLANS AND SPECIFICATIONS, THE RESTRICTIVE SHALL GOVERN.

K. CONTRACTOR SHALL MAINTAIN ONE SET OF "AS–BUILT" PLANS MARKED IN RED SHOWING EVERY CHANGE, ADDITION, DELETION OR MODIFICATION INCLUDING EXACT ROUTING OF CONDUITS. THIS "AS–BUILT" SET SHALL BE RETURNED TO THE CITY BEFORE FINAL ACCEPTANCE OF WORK.

L. CONTRACTOR SHALL PROVIDE A COMPLETE AND FUNCTIONING ELECTRICAL SYSTEM MEETING THE LETTER AND THE INTENT OF THESE PLANS AND SPECIFICATIONS.

M. POLES STORED ON SITE SHALL BE HANDLED (INCLUDING DELIVERY AND SETTING) WITH APPROVED STRAPS TO AVOID DAMAGE TO GALVANIZING. ACCEPT POLES FROM MANUFACTURER'S DELIVERY IN THE PRESENCE OF CITY VERIFYING ANY DAMAGE. POLES STORED SHALL NOT SET ON GRADE. SET POLES ON WOOD BASES AND TURNED 180 DEGREES EVERY 48 HOURS MINIMUM. TOUCH UP PAINTING (GALVANIZING) SHALL BE PER POLE MANUFACTURER'S REQUIREMENTS.

N. SEE ELECTRICAL SPECIFICATIONS FOR ADDITIONAL REQUIREMENTS.

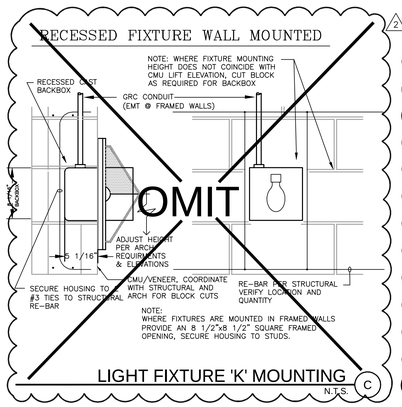

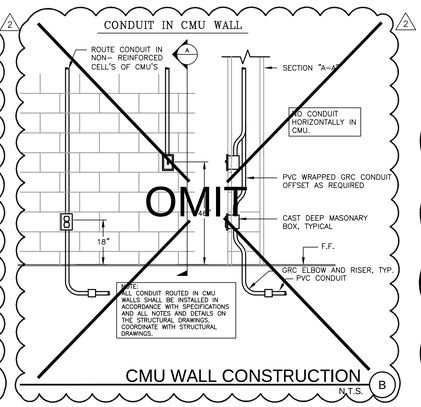

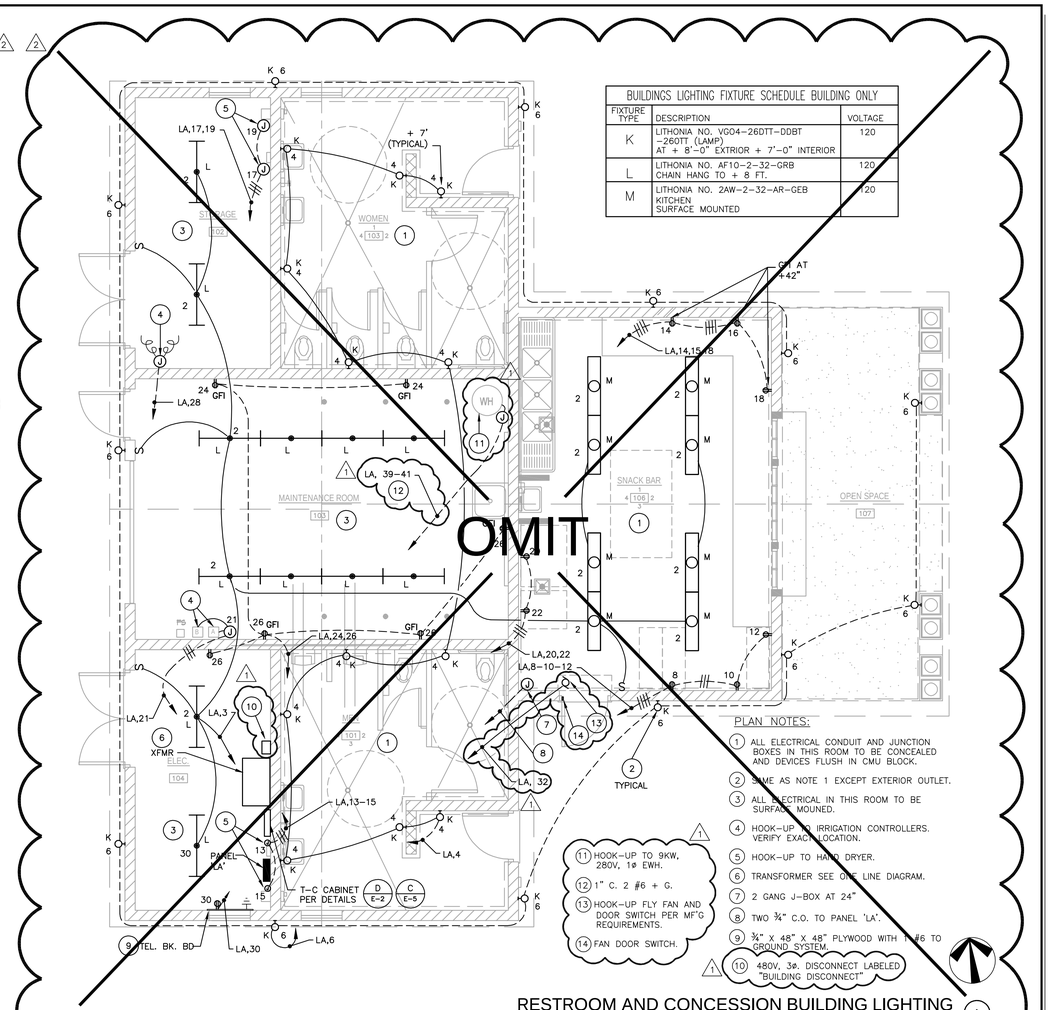

BUILDINGS LIGHTING FIXTURE SCHEDULE BUILDING ONLY		
FIXTURE TYPE	DESCRIPTION	VOLTAGE
K	LITHONIA NO. VGO4–26DTT–DDBT –260TT (LAMP) AT + 8'–0" EXTRIOR + 7'–0" INTERIOR	120
L	LITHONIA NO. AF10–2–32–GRB CHAIN HANG TO + 8 FT.	120
M	LITHONIA NO. 2AW–2–32–AR–GEB KITCHEN SURFACE MOUNTED	120

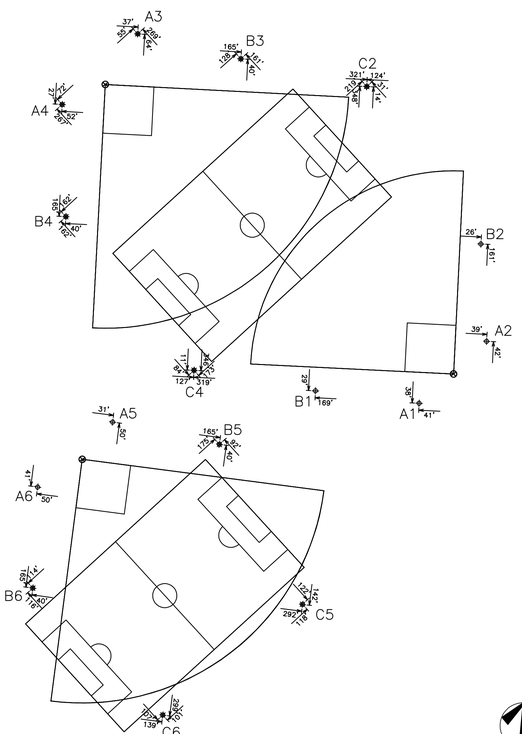

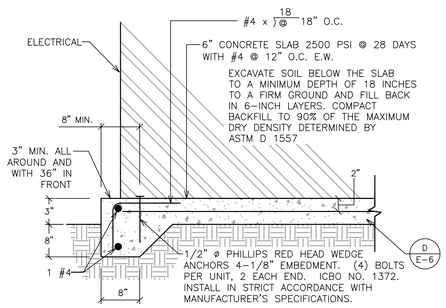

ZONE SCHEDULE				
ZONE	REC RELAY #	ZONE DESCRIPTION	CIRCUIT DESCRIPTION POLE ID	CIRCUIT DESCRIPTION CONT ID
Zone 1	1	Baseball 1	A5	C1
			A6	C2
Zone 2	2	Baseball Field 2	A3	C3
			A4	C4
			B3	C5
			B4	C6
Zone 3	3	Baseball Field 3	A1	C7
			A2	C8
			B1	C9
			B2	C10
Zone 4	4	Soccer 1	B5	C11
			B6	C12
			C5	C13
			C6	C14
Zone 5	5	Soccer 2	C2	C15
			C4	C16
Zone 6	6	Parking Lot East	X1	C17
Zone 7	7	Parking Lot West	X2	C18
Zone 8	8	Playground	X3	C19
Zone 9	1	Building Interior	X4	C20
Zone 10	2	Walkway Lights	X5	C21
Zone 11	3	Building Exterior Lights	X6	C22
Zone 12	4	Backlight	X7	C23

CIRCUIT SUMMARY BY POLE ID						
POLE	CIRCUIT NAME	# OF FIXT	FULL LOAD AMPS	CONTACTOR SIZE (AMPS)	CONTACTOR ID	ZONE
A1	Baseball Field 3	3	7.4	30	C7	3
A2	Baseball Field 3	3	7.4	30	C8	3
A3	Baseball Field 2	3	7.4	30	C3	2
A4	Baseball Field 2	3	7.4	30	C4	2
A5	Baseball 1	3	7.4	30	C1	1
A6	Baseball 1	3	7.4	30	C2	1
B1	Baseball Field 3	6	14.8	30	C9	3
B2	Baseball Field 3	6	14.8	30	C10	3
B3	Baseball Field 2	7	16.5	30	C5	2
B4	Baseball Field 2	8	22.2	30	C6	2
B5	Soccer 1	7	16.5	30	C11	4
B6	Soccer 1	7	16.5	30	C12	4
C2	Soccer 2	12	29.6	30	C15	5
C4	Soccer 2	12	29.6	30	C16	5
C5	Soccer 1	6	14.8	30	C13	4
C6	Soccer 1	6	14.8	30	C14	4
X1	Parking Lot East	8	8.8	30	C17	6
X2	Parking Lot West	8	8.8	30	C18	7
X3	Playground	8	8.8	30	C19	8
X4	Building Interior	8	8.8	30	C20	9
X5	Walkway Lights	8	8.8	30	C21	10
X6	Building Exterior Lights	8	8.8	30	C22	11
X7	Backlight	8	8.8	30	C23	12

MUSCO TO PROVIDE HOUR METER ON FACE OF CONTACTOR CABINETS FOR ALL BALLFIELD LIGHTING ONLY

musco

Project Number	106951
Project Name	Reid Park SB/SO
Prepared by:	
Sales Rep	Mike Higgins — Date: 07/18/2005
Scan	106951r6
Service Location	1 of 1

EQUIPMENT LISTING

	DESCRIPTION	APPROXIMATE SIZE
1.	COMMUNICATION ENCLOSURE	16 X 16
2.	CONTROL AND MONITORING CABINET	24 X 72
3.	CONTROL AND MONITORING CABINET	24 X 72
4.	CONTROL AND MONITORING CABINET	24 X 48

	QTY	SIZE
TOTAL CONTACTORS:	25	30 AMP
TOTAL Off/On/Auto SWITCHES:	14	

SWITCHING SCHEDULE

Field Type	Zones	Customer Field Name
BASEBALL	1,4	BASEBALL-Field 1
BASEBALL	2,5	BASEBALL- Field 2
BASEBALL	3,5	BASEBALL- Field 3
MANUAL	10	Walkway Lights
MANUAL	11	Building Exterior Lights
MANUAL	12	Backlight
MANUAL	6	Parking Lot East
MANUAL	7	Parking Lot West
MANUAL	8	Playground
MANUAL	9	Building Interior
Soccer-1	4	Soccer-Field 1
Soccer-2	2,5	Soccer- Field 2

MUSCO LIGHTING CONTROL SYSTEM 'CONTROL LINKS'
N.T.S.
E

DETAIL NOTES:
1. 1 #3/0 CU. 1" RGS EMBEDDED IN CONCRETE FOUNDATION WITH MINIMUM 2" ALL AROUND PER ARTICLE 250.50 (c). SEE UFER GROUND DETAIL.
2. THE REBAR MAY ONLY EXTEND OUT OF SLAB IN A DRY LOCATION. THE REBAR MUST EXTEND OUT OF SLAB AT LEAST SIX INCHES AND NO MORE THAN 18 INCHES AND THE POINT OF CONNECTION OF THE GROUNDING ELECTRODE CONDUCTOR IS ENCASED IN CONCRETE. EXCEPTION: WHERE THE CONNECTION OF THE GROUNDING ELECTRODE CONDUCTOR IS ENCASED IN CONCRETE.
3. CONNECTION TO ELECTRODE. CONNECT GROUNDING CONDUCTOR TO GROUNDING ELECTRODE WITH LISTED GROUND CLAMP. SEE E.E.C. 250–70.
4. 1 #6 CU. –3/4" RGS TO MAIN TELEPHONE BACKBOARD.
5. MAKE CONNECTION TO COLD WATER PIPING WITH–IN THE FIRST FIVE FEET OF THE WATER PIPE ENTRANCE TO THE BUILDING.

GENERAL NOTES:
GROUNDING ELECTRODE CONDUCTOR MUST TERMINATE AT NEAREST STRUCTURAL STEEL OR WATER PIPE (NEC 250–50 (a)

20 FT. (6.1 M) OR MORE OF 1/2" DIAMETER REINFORCING STEEL, OR #4 BARE COPPER WIRE (OR LARGER). WHERE SPLICES ARE NECESSARY TO OBTAIN THE REQUIRED 20 FEET OF REBAR, THEY MUST BE MADE SO THAT THE TWO BARS OVERLAP BY NO LESS THAN 15 INCHES AND ARE SECURED BY AT LEAST TWO STEEL TIE WIRES. REINFORCING RODS THAT ARE COATED WITH A NONCONDUCTIVE MATERIAL ARE NOT ACCEPTABLE AS AN ELECTRODE.

THE TOTAL RESISTANCE MEASURED BETWEEN THE MAIN SERVICE GROUND BUS AND THE EARTH SHALL NOT EXCEED 25 OHMS UNDER DRY GROUND CONDITIONS. SEE ELECTRICAL SPECIFICATIONS FOR "GROUND TESTS".

UFER GROUND
IN ACCORDANCE WITH THE 1999 N.E.C AND 2001 CALIFORNIA ELECTRIC CODE (C.E.C.)

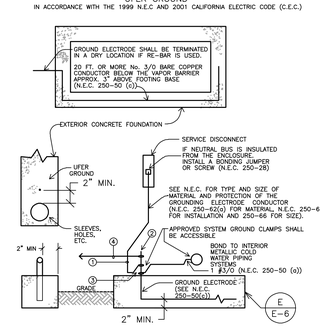

REEDCORP ENGINEERING
CONSULTING ELECTRICAL ENGINEERS
2061 Business Center Drive, Suite 110
Irvine, CA 92612
(949) 752–1278 FAX: (949) 752–1287
E–MAIL : ee@reedcorp.net
04–216–1944

RHA LANDSCAPE ARCHITECTS PLANNERS INC
3612 MISSION INN AVE
RIVERSIDE, CALIFORNIA 92501
LIC. #1512
PH. (909) 781–1930
FAX (909) 686–8091

© R.H.A. Landscape Architects–Planners, Inc. expressly reserves its common law copyright and other property rights to these plans, designs and specifications. These documents are not to be reproduced, changed or copied in any form or manner whatsoever, nor are they to be assigned to any third party, without first obtaining the express written permission and consent of R.H.A. Landscape Architects–Planners, Inc.

CLIENT:
THE CITY OF RIVERSIDE
PARK AND RECREATION DEPT.
3900 Main Street
Riverside, California 92522

PROJECT:
Reid Park Expansion
Community Park
Orange St. and Garner Rd.

REVISIONS	DATE	BY
1 MISC.	1/26/06	RR
2 MISC.	7/18/06	RR

REGISTERED PROFESSIONAL ENGINEER THOMAS E. HARTMAN No. 7531 Exp: 9/30/08 ELECTRICAL STATE OF CALIFORNIA

SHEET TITLE
RESTROOM/CONCESSION BUILDING AND DETAILS

DESIGNED	MR
DRAWN	MR
CHECKED	RR
DATE	01-17-06
SCALE	AS NOTED
JOB NO.	

SHEET
E–6
OF 6 SHEETS

Z:\SDSKPROJ\1944\Reid Park\Sheets\E-6 Building Electrical.dwg, E-5 Building, 9/10/2007 12:30:29 PM, mariah, DWF6 ePlot.pc3, Reedcorp Engineering, Inc., Reedcorp Engineering, Inc.

(One Inch on Original Sheet) Drawing File: Z:\SDSKPROJ\1944\Reid Park\Sheets\E-6 Building Electrical Sep 10, 2007 - 12:30pm