REID PARK

Riverside, CA

DID NOT AWARD

CODE ANALYSIS

1997 Uniform Building Code
2000 Uniform Mechanical Code
2000 Uniform Plumbing Code
1999 National Electrical Code
2001 California Building Code
2001 California Mechanical Code
2001 California Plumbing Code
2001 California Electrical Code

Occupancy Group	B
Type of Construction	V-N, non-sprinklered
Basic Allowable Area	8,000 S.F.
Allowable Area Increases	-
Acutal Building Area	
Kitchen	401 s.f.
Women	258 s.f.
Men	248 s.f.
Storage	147 s.f.
Maintenence Room	413 s.f.
Electric Rm	153 s.f.
TOTAL	1620 s.f.

CODE ANALYSIS

Architect:
Kroh/Broeske Architects
6180 Brockton Ave. Suite 202
Riverside, Ca. 92506
Attn: Jim Broeske, Alida Torres
909.788.5940, 909.788.1365 fax

Structural Engineer:
Johnson & Nielsen Associates
647 N. Main Street, Suite 4-B
Riverside, CA 92501
Raju Bhakti
(909) 686-5122, (909) 686-6752 fax

Structural Engineer:
Namdar Structural Engineering, Inc.
1223 University Ave. Suite 210
Riverside, Ca. 92507
Attn: Nader Namdar
909.682.9025, 909.682.5199 fax

Mechanical & Plumbing Engineer:
Advanced Environmental Engineering
12762 Overbrook Dr.
Santa Ana, CA 92705
Attn: Wing Fung
(714) 538-2286, (714) 538-2286 fax

Electrical Engineer:
Reedcorp Engineering
2061 Business Center Drive, Suite 110
Irvine, CA 92612
Attn: Ron Reed
(949) 752-1278, (949) 752-1287 fax

PROJECT DIRECTORY

BUILDING 1
Concession Stand Building

GENERAL
A0 Title Sheet
A1-1.1 Site Plan

ARCHITECTURAL
A1-2.1 Floor Plan
A1-2.2 Reflected Ceiling Plans
A1-2.3 Roof Plan
A1-3.1 Exterior Elevations
A1-3.2 Exterior Elevations
A1-4.1 Building Sections
A1-4.2 Building Sections
A1-5.1 Interior Elevations
A1-6.1 Schedules
A1-7.1 Details
A1-7.2 Details

STRUCTURAL
S-1 Foundation Plan
S-2 Roof Framing Plan
S-3 Elevations & Sections
S0-1 General Notes & Typ. Details
S0-2 General Notes & Typ. Details - Wood

MECHANICAL
M-1 HVAC Floor Plan & Equipmnet Schedule
M-2 Certificates of Compliance

PLUMBING
P0.1 Plumbing Notes & Fixture Schedule
P2.1 Plumbing Floor Plans & Details
P2.2 Plumbing Floor Plans & Details

ELECTRICAL
E-1 -

DID NOT AWARD

SHEET INDEX

VICINITY MAP

KROH|BROESKE ARCHITECTS
6180 BROCKTON AVE, SUITE 202
RIVERSIDE, CA. 92506-2228
TEL 951-788-5940
FAX 951-788-1365
E-MAIL: KBA@KROHBROESKE.COM

© These plans are not to be reproduced, changed or copied in any form or manner whatsoever, nor are they to be in A Landscape Architects, Pictures, Inc. expressly reserved. Its contents are copyright and other property rights to these plans, designed to be used only without the express written permission.

CLIENT:
CITY OF RIVERSIDE
PARK AND RECREATION DEPARTMENT
3900 MAIN STREET
RIVERSIDE, CA 92501

PROJECT:
REID PARK EXPANSION
801 NORTH ORANGE ST.
RIVERSIDE,CA

REVISIONS	DATE	BY
1	07.12.05	B.M.

LICENSED ARCHITECT
STEVEN MICHAEL KROH
No. C012790
Ren. 7.31.2005
STATE OF CALIFORNIA

SHEET TITLE

DESIGNED
DRAWN A. Torres, B. Mantel, M. Mikhail
CHECKED B. GRIDLEY
DATE 7.22.04
SCALE
JOB NO. 03032

SHEET A0
OF SHEETS

CONSTRUCTION SET

BID SET 02-06-06

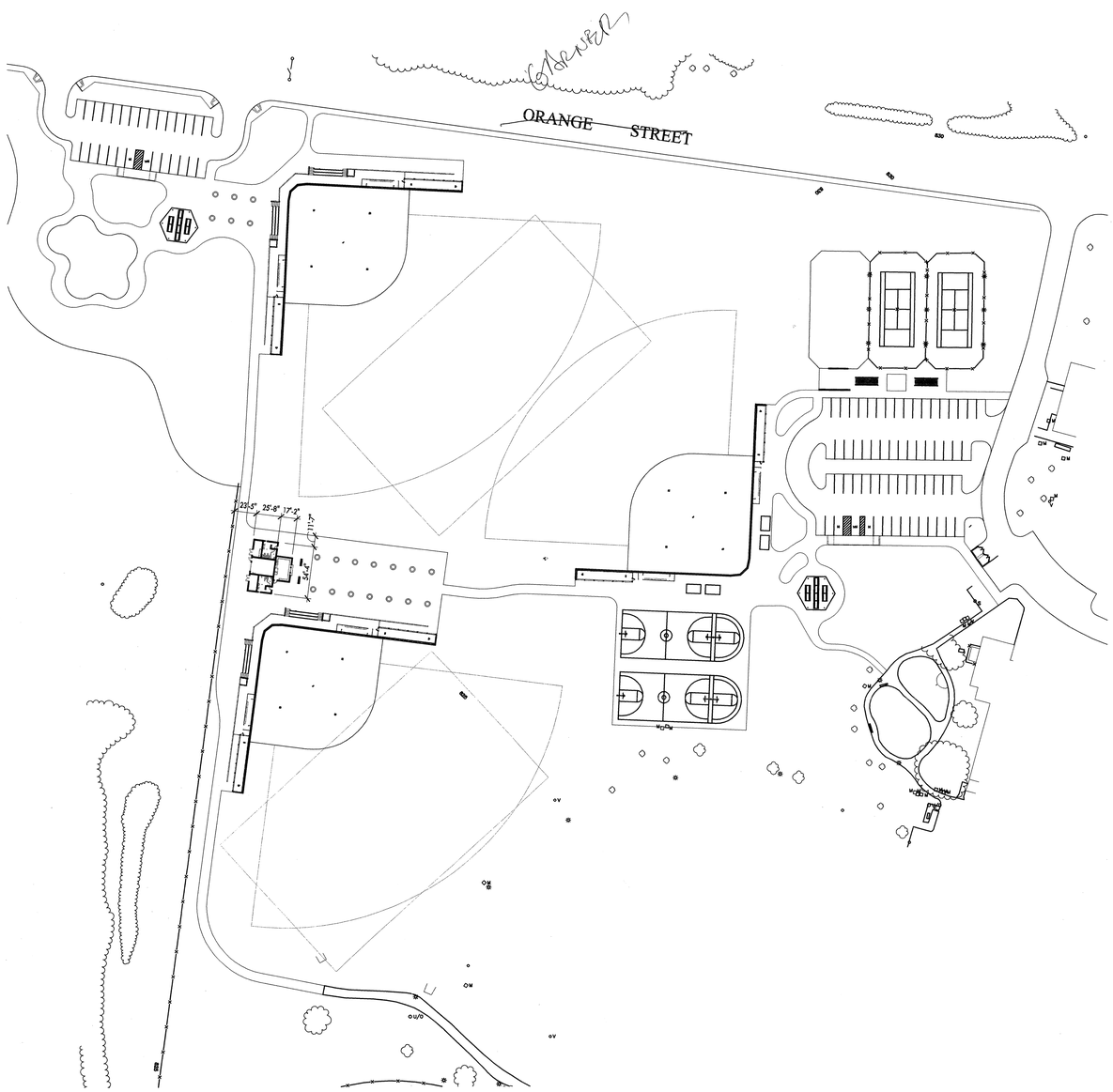

Site Plan
1"=60'-0"

Did Not Award

KROHI|BROESKE ARCHITECTS
8180 BROCKTON AVE, SUITE 202
RIVERSIDE, CA. 92506-2228
TEL 951-788-5940
FAX 951-788-1365
E-MAIL: KBA@KROHIBROESKE.COM

CLIENT:
CITY OF RIVERSIDE
PARK AND RECREATION DEPARTMENT
3900 MAIN STREET
RIVERSIDE, CA 92501

PROJECT:
REID PARK EXPANSION
801 NORTH ORANGE ST.
RIVERSIDE,CA

REVISIONS	DATE	BY
1	07.12.05	B.M.

LICENSED ARCHITECT
BRIAN MICHAEL MOSH
No. C012790
Exp. 7.31.2005
STATE OF CALIFORNIA

NOT FOR CONSTRUCTION

SHEET TITLE

DESIGNED
DRAWN A. Torres, B. Mantel, M. Mikhail
CHECKED B. GRIDLEY
DATE 7.22.04
SCALE
JOB NO. 03032

SHEET
A1-1.1

RECEIVED
APR 13 2006
PARK & RECREATION
PLANNING & DESIGN

BID SET 02-06-06

CODE	1999 NATIONAL ELECTRICAL CODE 2001 CALIFORNIA BUILDING CODE 2001 CALIFORNIA MECHANICAL CODE 2001 CALIFORNIA PLUMBING CODE 1998 CALIFORNIA FIRE CODE 1998 CALIFORNIA ENERGY CODE
OCCUPANCY GROUP	B
CONSTRUCTION TYPE	V-NONE RATED
BASIC ALLOWABLE AREA	8,000 SQ. FT./ PER FLOOR
YARD INCREASE (0) 0%	N/A
SPRINKLER AREA INCREASE	N/A
TOTAL ALLOWABLE AREA	8,000 SQ. FT./ PER FLOOR
MAX. HEIGHT/ NO. OF STORIES	1
TOTAL BUILDING AREA	1,707 S.F. (CONCESSION BLDG)

NOTE: RESTROOM BUILDING = 555 S.F.

BUILDING CODE ANALYSIS

1. CONTRACTOR TO VERIFY APPROVED WATER PRESSURE AND PROVIDE WATER PRESSURE REDUCING VALVE ON FIRE SPRINKLER RISER.
2. EMERGENCY LIGHTING WILL BE REQUIRED PRIOR TO OCCUPANCY.
3. NOT USED
4. PROVIDE ADDRESS IDENTIFICATION FOR ALL BUILDINGS. ADDRESS SHALL BE VISIBLE FROM NORMAL FIRE DEPARTMENT VEHICLE APPROACH. NUMBERS AND/ OR LETTERS SHALL HAVE A CONTRASTING BACKGROUND.
5. IDENTIFICATION AND POSTING OF REQUIRED FIRE LANES SHALL BE PROVIDED AS DIRECTED BY THE ASSIGNED FIRE INSPECTOR.
6. ALL REQUIRED HYDRANTS SHALL BE IN SERVICE AND FIRE FLOW AVAILABLE PRIOR TO PERMIT RELEASE BY THE FIRE DEPARTMENT. VIOLATION OF THIS REQUIREMENT MAY RESULT IN CITATION THAT REQUIRES A COURT APPEARANCE TO BE ISSUED.
7. CONTRACTOR TO SUBMIT PLANS AND SUPPORTING CALCULATIONS FOR ALL PRIVATE HYDRANTS SYSTEMS, AND OBTAIN APPROVALS BY THE FIRE DEPARTMENT PRIOR TO INSTALLATION.
8. ON- SITE PRIVATE HYDRANTS SHALL BE LOCATED NO CLOSER THAN FORTY (40) FEET TO ANY STRUCTURE. HYDRANTS SHALL BE PAINTED AND CODED AS DIRECTED BY FIELD INSPECTORS OF THE FIRE DEPT. LOCATIONS OF HYDRANTS SHALL BE IDENTIFIED BY BLUE REFLECTIVE MARKERS INSTALLED IN THE ROADWAY ADJACENT TO EACH HYDRANT LOCATION. REGULATIONS REGARDING THE PARKING OF VEHICLES IN PROXIMITY TO FIRE HYDRANTS SHALL BE THE RESPONSIBILITY OF THE OWNER AND/OR OCCUPANT.
9. NATIONAL FIRE PROTECTION ASSOCIATION, STANDARD 25, CHAPTER 4 REQUIRES ALL PRIVATE HYDRANTS SYSTEMS TO BE SERVICED ANNUALLY TO ENSURE PROPER FUNCTIONING. SERVICE SHALL INCLUDE LUBRICATING HYDRANTS ANNUALLY TO KEEP ALL STEMS, CAPS, PLUGS, AND THREADS IN PROPER OPERATING CONDITION. HYDRANTS SHALL BE KEPT FREE OF MATERIALS AND PROTECTED AGAINST MECHANICAL DAMAGE SO THAT FREE ACCESS IS ENSURED. THE SERVICE, AND ANY NECESSARY REPAIRS, ARE THE RESPONSIBILITY OF THE PROPERTY OWNER. PLEASE CALL THE CITY OF RIVERSIDE FIRE DEPARTMENT AT (909) 826-5321 IF YOU HAVE ANY QUESTIONS.
10. ILLUMINATED EXIT SIGNS WITH BATTERY BACK-UP, OR SELF-LUMINOUS TYPE SHALL BE PROVIDED AT REQUIRED EXITS AND ADDITIONAL LOCATIONS AS REQUIRED BY THE CALIFORNIA BUILDING CODE TO CLEARLY INDICATE PATH OF EXIT TRAVEL. LOCATION OF SIGNS SHALL BE SUBJECT TO FIELD APPROVAL BY THE FIRE DEPARTMENT
11. PROVIDE PORTABLE FIRE EXTINGUISHERS AS DIRECTED DURING INSPECTION BY THE FIRE DEPARTMENT. EXTINGUISHERS SHALL HAVE A MINIMUM RATING OF 2A10BC AND BE ACCESSIBLE EVERY 75 FEET OF TRAVEL.
12. NO OCCUPANCY OR STORAGE OF ANY KIND SHALL BE ALLOWED WITHIN THIS BUILDING UNLESS APPROVAL IS GRANTED FOR SUCH BY THE FIRE INSPECTOR AND BUILDING INSPECTOR.
13. USERS OR HANDLERS OF HAZARDOUS MATERIALS IN EXCESS OF LEGAL LIMITS MUST SUBMIT A COMPLETED BUSINESS EMERGENCY PLAN TO THE FIRE DEPT. WITHIN THIRTY (30) DAYS OF BECOMING A USER OR HANDLER AT THIS PROPOSED SITE. THE PLAN SHALL BE ACCOMPANIED BY THE APPROPRIATE FEES AS ESTABLISHED PURSUANT TO RIVERSIDE MUNICIPAL CODE, SECTION 9.48.030. THEREAFTER, SAID PERSON OR BUSINESS SHALL COMPLY EVERY JANUARY.
14. AN INSPECTION BY THE FIRE DEPARTMENT IS REQUIRED PRIOR TO OCCUPANCY. CONTACT INSPECTOR FIRST TO SCHEDULE YOUR INSPECTION. NOTE: FAILURE TO CALL FOR YOUR INSPECTION IS A VIOLATION OF THE CALIFORNIA FIRE CODE AND MAY RESULT IN CRIMINAL PROSECUTION.
15. ACCESS ROADWAYS SHALL BE ALL WEATHER SURFACES, PAVED, PROVIDED WITH ENGINEERED TURF BLOCK, OR ALTERNATE DESIGN. SUCH ROADWAYS SHALL BE MAINTAINED AT ALL TIMES. SEE CIVIL DRAWINGS.

FIRE DEPARTMENT NOTES

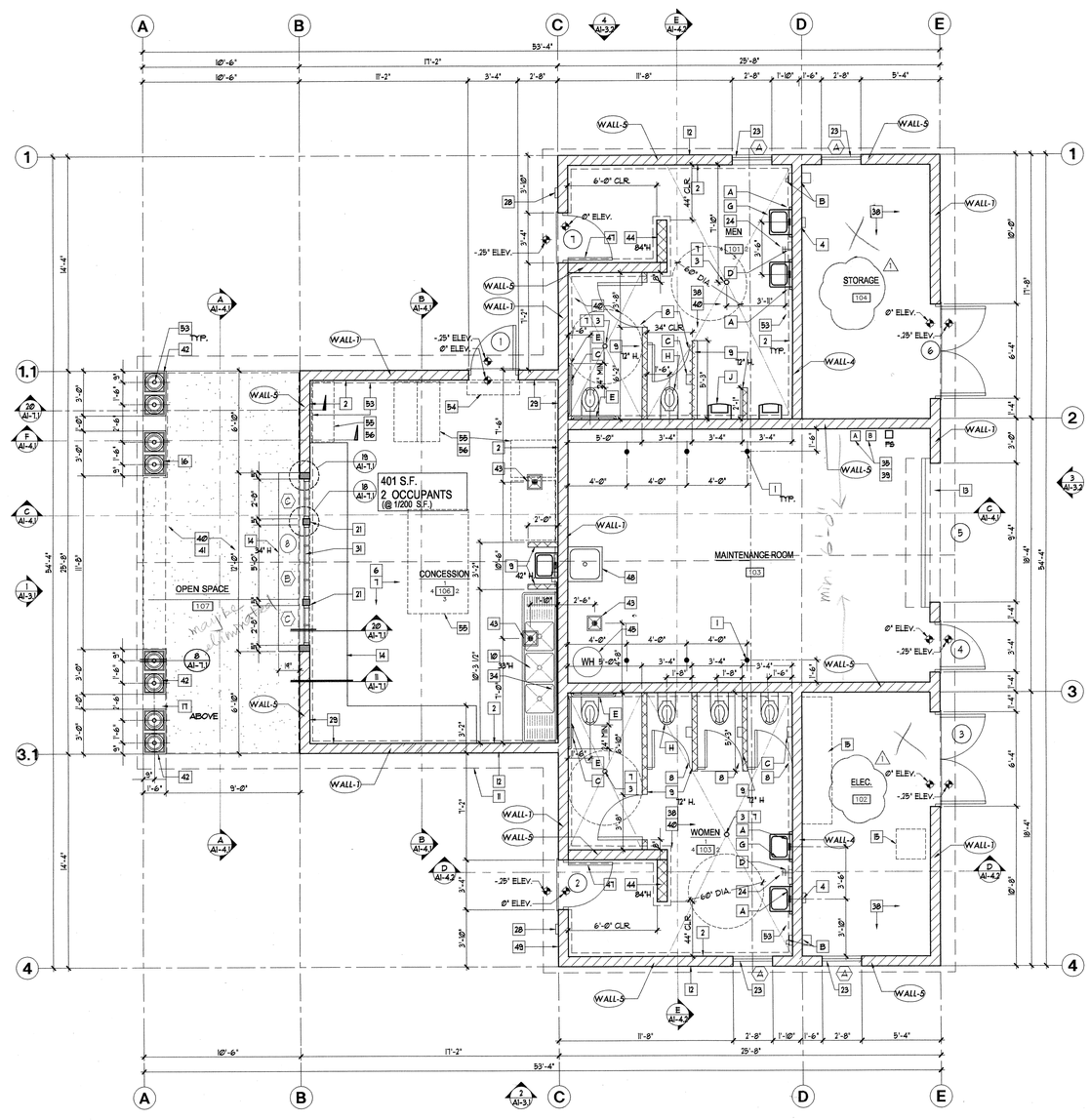

Floor Plan
1/4"=1'-0"

KEY NOTES

1. Bollards, 6" dia. concrete filled steel
2. All walls to have block filler and epoxy paint system, color per finish schedule
3. Floor drain. See plumbing drawings
4. Chronomite instant hot water heater, model S-461L-See Electrical drawings
5. Thermal insulation per specifications
6. Epoxy-sealed concrete floor with 6" ceramic tile cove base
7. 2% slope toward floor sinks.
8. Toilet partition door to latch to masonry partition or wall, 1/8" clr. space between door & wall latch.
9. Toilet partition - 4" masonry block, 6'-0" +/- height
10. 3 compartment sink
11. Line of roof overhang above
12. 8" CMU walls (typ.) with exterior plaster finish @ exterior face of wall only.
13. Metal roll up door. Heavyduty commercial grade.
14. Stainless steel counter top w/ 6" splash and roll edge
15. Electrical equipment. See electrical plans.
16. Decorative composite columns. Use model TC-7 and base number CB-02-12 by Moonlight Molds (310) 538-9142
17. Exterior plaster soffit
18. Exposed wood framing. Light sand blast and semi transparent stain finish
19. Structural beam. See structural drawings
20. Wall mounted light fixture, See Electrical
21. ⅝" Gyp. Brd. over wood framing.
22. 4" Wide G.I. soffit vent. See detail 14 / A1-7.1
23. Metal Louvers, see dtl. 16/A1-7.1
24. Hose bib. See plumbing plans
25. 2x framing w/ plywood, mechanical platform. See structural and mechanical plans.
26. Light fixture. See Electrical plans.
27. Standing Seam Metal Roofing
28. H.C. accessible sign on wall and door. A1-6.1
29. Sanitary ceramic tile cove base
30. 2x6 wood trim plant-on. typ.
31. Vinyl (or steel) framed windows.
32. Integral 8" metal backsplash
33. 2x framing @ 16" o.c. w/ plywood sheathing where occurs, see structural plans.
34. Stainless steel wall panel.
35. Irrigation controllers.
36. W.I. enclosure. 6'-0" high w/ 3'-6" wide gate. 2" sq. frame w/ 10" dia.x18" deep footing @ each post, and 1" sq. pickets @ 4" o.c. max. spacing.
37. Mechanical equipment. See mechanical plans.
38. Sealed concrete slab (thickness per Structural) with 6" ceramic tile coved base.
39. Install conduits per notes 1 & 2 on sheet IP-2
40. 2% max. floor slope at accessible path
41. Hold grade max 1" below finish floor, no slope to exeed 2%
42. Concrete foundation/ base for decorative column.
43. Floor Sink, Jr Smith #2699, see Plumbing sheets
44. C.M.U. wall, 7'-0"+/- height
45. Hot water heater
46. Trim at roof edge, see detail 4/A1-7.1
47. Decorative metal gate - see detail 19/A1-7.1
48. Utility floor sink
49. 8" Metal address numbers by Selton, style Futura
50. Copper Craft gabled dormer 2AX12, 8IN12, or equal.
51. 1/4" metal control joint
52. Depress slab to receive 6" ceramic tile cove base. Tile to be flush w/ epoxy-sealed conc. floor.
53. 3" DIA. steel pipe column, per Structural
54. Fly Fan above door - connect switch to door.
55. Portable furniture N.I.C.
56. Provide electrical outlets for portable furniture
57. 22"x30" Attic Access Panel

Wall Type Legend

- 8" MASONRY CEMENT BLOCK
- 7'-0" HIGH 8" MASONRY PARTITION WALL
- 6'-0" HIGH, 4" MASONRY TOILET PARTITION WALL
- WOOD FRAMED WALL

Wall Height Legend

- WALL-1 MAS. WALL - +9'-4" A.F.F.
- WALL-2 MAS. WALL - +11'-2" A.F.F.
- WALL-3 MAS. WALL - +13'-9" A.F.F.
- WALL-4 MAS. WALL - +15'-8" A.F.F.
- WALL-5 MAS. WALL - SLOPE AT 8:12 TO MATCH ROOF SLOPE

Restroom Accessory Schedule

A	MIRROR; POLISHED STAINLESS STEEL REFLECTIVE PANEL	
B	HAND BLOW-DRYER: FASTAIRE MODEL HD-03	
C	TOILET TISSUE DISP.	ASLIN IND. MODEL #: TPD0250WB-SS
D	SOAP DISP. (RECESSED)	B-4063
E	1 1/4"Ø GRAB BARS	B-5837
F	NOT USED	
G	LAVATORY; AMERICAN STANDARD LUCERNE WALL HUNG, MODEL 0355.012 (WHITE) CHICAGO FAUCET MODEL: 802A335	
H	TOILET, AMERICAN STANDARD AFWALL EL1.6, MODEL 2258.128 WOTJ P,SPMOTE 95 COMFORT CURVE SEAT (WHITE), REGAL FLUSHMETER MODEL: 114-1.6	
J	URINAL, AMERICAN STANDARD LYNBROOK 1.0, MODEL: 6605.027, REGAL FLUSHOMETER 190-1	

BID SET 02-06-06

KROHIBROESKE ARCHITECTS
8180 BROCKTON AVE. SUITE 202
RIVERSIDE, CA. 92506-2226
TEL 951-788-5940
FAX 951-788-1365
E-MAIL: KBA@KROHIBROESKI.COM

© These drawings are and to be reproduced, changed or copied in any form or manner whatsoever nor are they to be used for any purpose other than those authorized by KROHIBROESKE ARCHITECTS, Inc. expressly to be reproduced and distributed for bidding and construction purposes.

CLIENT:
CITY OF RIVERSIDE
PARK AND RECREATION DEPARTMENT

PROJECT:
REID PARK EXPANSION
801 NORTH ORANGE ST.
RIVERSIDE, CA

REVISIONS	DATE	BY
1	07.12.05	B.M.

LICENSED ARCHITECT
STEVEN MICHAEL BROESKE
No. C012790
Ren. 7.31.2005
STATE OF CALIFORNIA

SHEET TITLE

DESIGNED	
DRAWN	A. Torres, B. Mansel, M. Mikhail
CHECKED	B. GRIDLEY
DATE	7.22.04
SCALE	
JOB NO.	03032

SHEET
A1 - 2.1

RECEIVED
APR 18 2006
PARK & RECREATION PLANNING & DESIGN

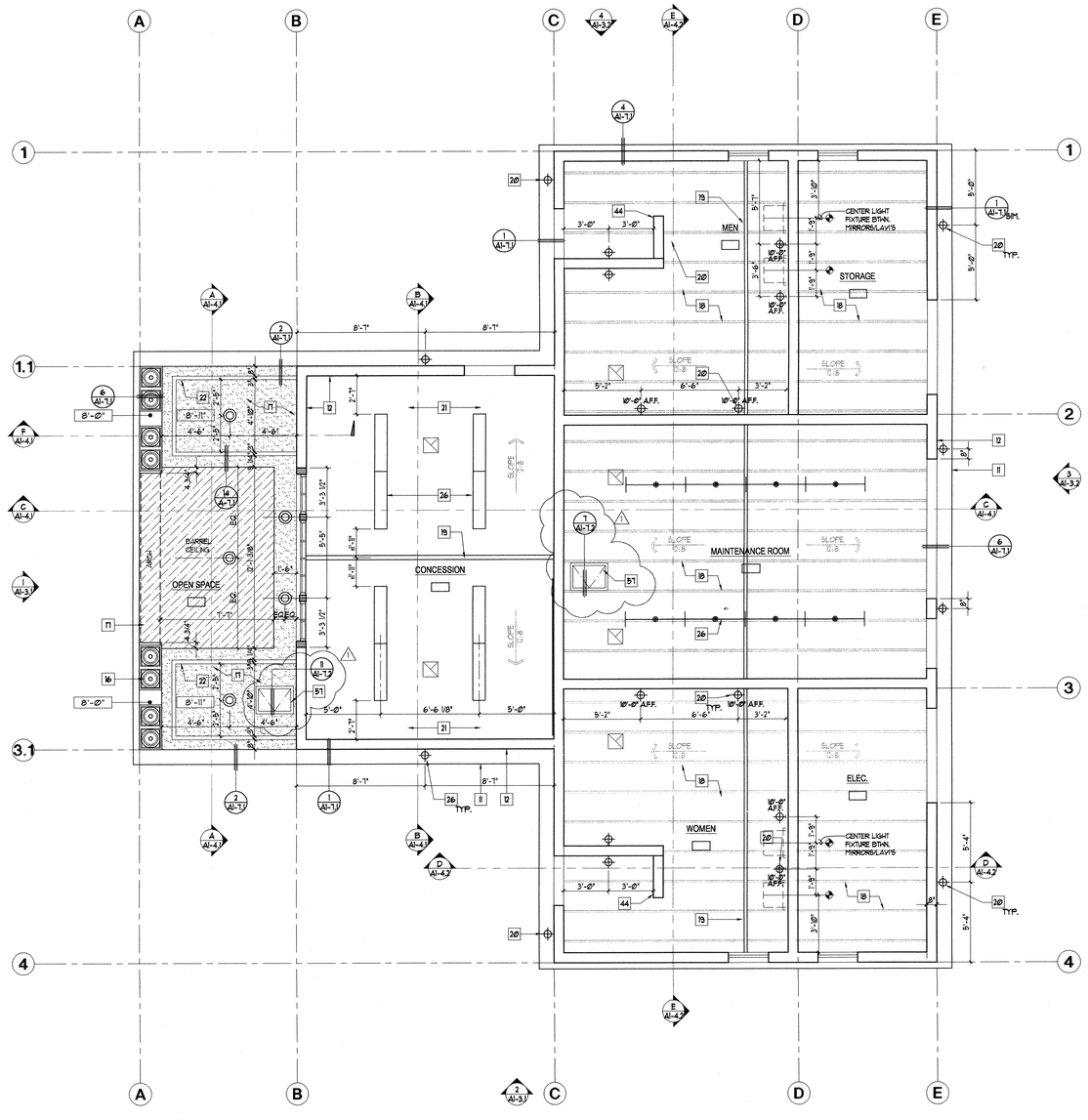

Reflected Ceiling Plan
1/4"=1'-0"

KEY NOTES

1. Bollards, 6" dia. concrete filled steel
2. All walls to have block filler and epoxy paint system, color per finish schedule
3. Floor drain. See plumbing drawings
4. Chronomite instant hot water heater, model S-461L-See Electrical drawings
5. Thermal insulation per specifications
6. Epoxy-sealed concrete floor with 6" ceramic tile cove base
7. 2% slope toward floor sinks.
8. Toilet partition door to latch to masonry partition or wall, 1/8" clr. space between door & wall latch.
9. Toilet partition - 4" masonry block, 6'-0" +/- height
10. 3 compartment sink
11. Line of roof overhang above
12. 8" CMU walls (typ.) with exterior plaster finish @ exterior face of wall only.
13. Metal roll up door. Heavyduty commercial grade.
14. Stainless steel counter top w/ 6" splash and roll edge
15. Electrical equipment. See electrical plans.
16. Decorative composite columns. Use model TC-7 and base number CB-02-12 by Moonlight Molds (310) 538-6142
17. Exterior plaster soffit
18. Exposed wood framing. Light sand blast and semi transparent stain finish
19. Structural beam. See structural drawings
20. Wall mounted light fixture, See Electrical
21. 1/2" Gyp. Brd. over wood framing.
22. 4" Wide G.I. soffit vent. See detail 14 / A1-7.1
23. Metal Louvers, see dtl. 16/A1-7.1
24. Hose bib. See plumbing plans
25. 2x framing w/ plywood, mechanical platform. See structural and mechanical plans.
26. Light fixture. See Electrical plans.
27. Standing Seam Metal Roofing
28. H.C. accessible sign on wall and door. A1-6.1
29. Sanitary ceramic tile cove base
30. 2x6 wood trim plant-on. typ.
31. Vinyl (or steel) framed windows.
32. Integral 8" metal backsplash
33. 2x framing @ 16" o.c. w/ plywood sheathing where occurs, see structural plans.
34. Stainless steel wall panel.
35. Irrigation controllers.
36. W.I. enclosure. 6'-0" high w/ 3'-6" wide gate. 2" sq. frame w/ 10" dia.x18" deep footing @ each post, and 1" sq. pickets @ 4" o.c. max. spacing.
37. Mechanical equipment. See mechanical plans.
38. Sealed concrete slab (thickness per Structural) with 6" ceramic tile coved base.
39. Install conduits per notes 1 & 2 on sheet IP-2
40. 2% max. floor slope at accessible path
41. Hold grade max 1" below finish floor, no slope to exeed 2%
42. Concrete foundation/ base for decorative column.
43. Floor Sink, Jr Smith #2699, see Plumbing sheets
44. C.M.U. wall, 7'-0"+/- height
45. Hot water heater
46. Trim at roof edge, see detail 4/A1-7.1
47. Decorative metal gate - see detail 10/A1-7.1
48. Utility floor sink
49. 8" Metal address numbers by Seton, style Futura
50. Copper Craft gabled dormer 24X12, 8IN12; or equal.
51. 1/4" metal control joint
52. Depress slab to receive 6" ceramic tile cove base. Tile to be flush w/ epoxy-sealed conc. floor.
53. 3" DIA. steel pipe column, per Structural
54. Fly Fan above door - connect switch to door.
55. Portable furniture N.I.C.
56. Provide electrical outlets for portable furniture
57. 22"x30" Attic Access Panel

Did Not Award

Reflected Ceiling Legend

- Wall Mounted Light Fixture
- Recessed Can Light Fixture
- Suspended tract light fixtures
- Florescent light fixtures

Note:
1. Refer to Electrical drawings for additional light fixture information

KROHI BROESKE ARCHITECTS
6180 BROCKTON AVE, SUITE 202
RIVERSIDE, CA. 92506-2228
TEL 951-788-5940
FAX 951-788-1365
E-MAIL: KBA@KROHIBROESKE.COM

© These plans are not to be reproduced, changed or copied in any form or manner whatsoever nor are they to be in all A Landscape Architects —Planners, Inc. expressly reserved. Its reserves the copyright and other property rights in these plans, assigned to any third party without first obtaining the express written permission.

CLIENT:
CITY OF RIVERSIDE
PARK AND RECREATION DEPARTMENT
3900 MAIN STREET
RIVERSIDE, CA 92501

PROJECT:
REID PARK EXPANSION
801 NORTH ORANGE ST.
RIVERSIDE,CA

REVISIONS	DATE	BY
1	07.12.05	B.M.

LICENSED ARCHITECT
STEVEN MICHAEL KROHI
No. C012790
Ren. 7.31.2005
STATE OF CALIFORNIA

SHEET TITLE

DESIGNED	
DRAWN	A. Torres, B. Mantel, M. Mikhail
CHECKED	B. GRIDLEY
DATE	7.22.04
SCALE	
JOB NO.	03032

SHEET
A1 - 2.2
OF SHEETS

RECEIVED
APR 18 2006
PARK & RECREATION PLANNING & DESIGN

BID SET 02-06-06

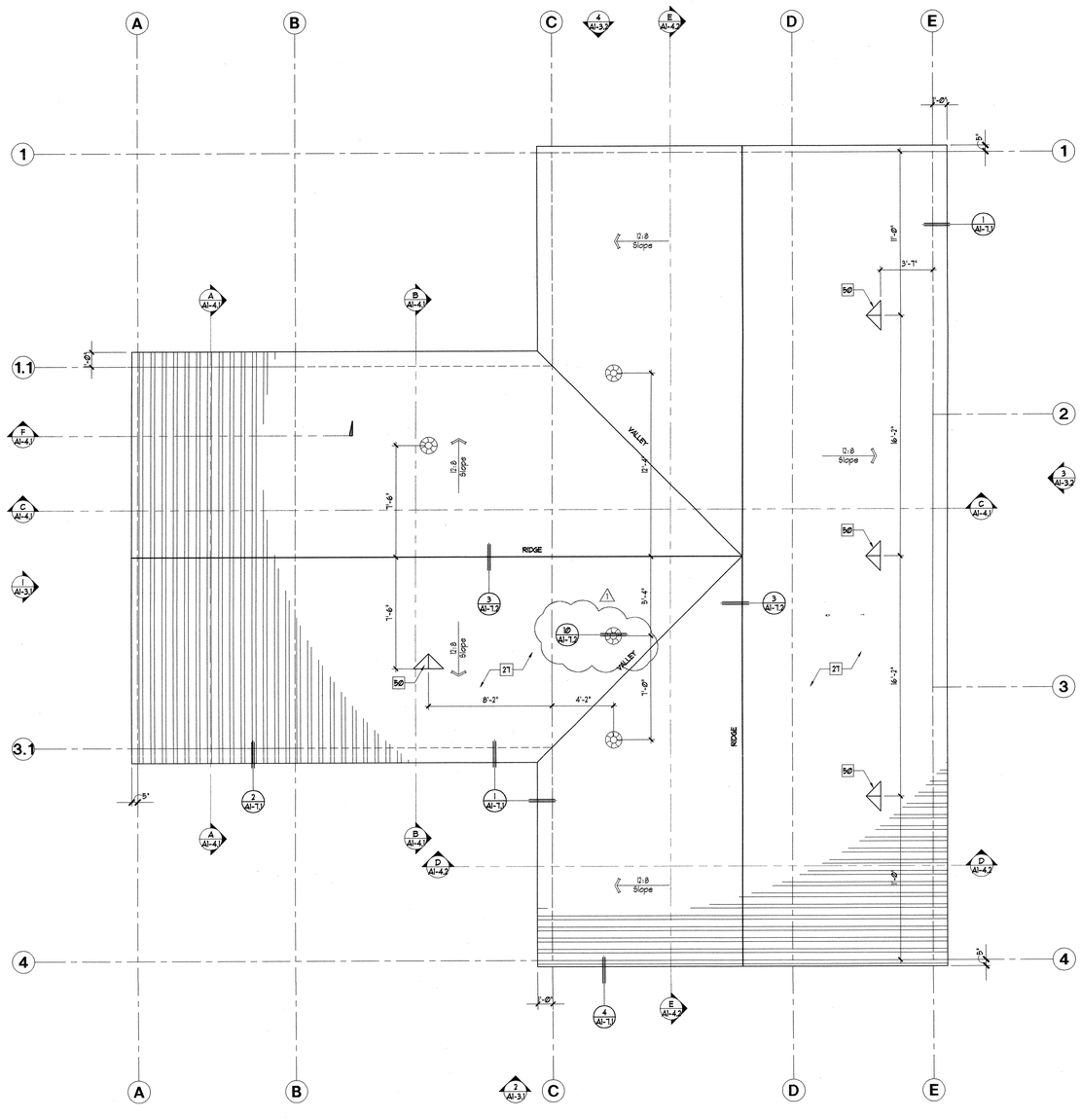

Roof Plan
1/4"=1'-0"

KEY NOTES

1. Bollards, 6" dia. concrete filled steel
2. All walls to have block filler and epoxy paint system, color per finish schedule
3. Floor drain. See plumbing drawings
4. Chronomite instant hot water heater, model S-461L-See Electrical drawings
5. Thermal insulation per specifications
6. Epoxy-sealed concrete floor with 6" ceramic tile cove base
7. 2% slope toward floor sinks.
8. Toilet partition door to latch to masonry partition or wall, 1/8" ch. space between door & wall latch.
9. Toilet partition - 4" masonry block, 6'-0" +/- height
10. 3 compartment sink.
11. Line of roof overhang above
12. 8" CMU walls (typ.) with exterior plaster finish @ exterior face of wall only.
13. Metal roll up door. Heavyduty commercial grade.
14. Stainless steel counter top w/ 6" splash and roll edge
15. Electrical equipment. See electrical plans.
16. Decorative composite columns. Use model TC-7 and base number CB-02-12 by Moonlight Molds (310) 538-9142
17. Exterior plaster soffit
18. Exposed wood framing. Light sand blast and semi transparent stain finish
19. Structural beam. See structural drawings
20. Wall mounted light fixture, See Electrical
21. 5/8" Gyp. Brd. over wood framing.
22. 4" Wide G.I. soffit vent. See detail 14 / A1-7.1
23. Metal Louvers, see dtl. 16/A1-7.1
24. Hose bib. See plumbing plans
25. 2x framing w/ plywood, mechanical platform. See structural and mechanical plans.
26. Light fixture. See Electrical plans.
27. Standing Seam Metal Roofing
28. H.C. accessible sign on wall and door. A1-6.1
29. Sanitary ceramic tile cove base
30. 2x6 wood trim plant-on. typ.
31. Vinyl (or steel) framed windows.
32. Integral 6" metal backsplash
33. 2x framing @ 16" o.c. w/ plywood sheathing where occurs, see structural plans.
34. Stainless steel wall panel.
35. Irrigation controllers.
36. W.I. enclosure. 6'-0" high w/ 3'-6" wide gate. 2" sq. frame w/ 10" dia.x18" deep footing @ each post, and 1" sq. pickets @ 4" o.c. max. spacing.
37. Mechanical equipment. See mechanical plans.
38. Sealed concrete slab (thickness per Structural) with 6" ceramic tile coved base.
39. Install conduits per notes 1 & 2 on sheet IP-2
40. 2% max. floor slope at accessible path
41. Hold grade max 1" below finish floor, no slope to exeed 2%
42. Concrete foundatiion/ base for decorative column.
43. Floor Sink, Jr Smith #2699, see Plumbing sheets
44. C.M.U. wall, 7'-0"+/- height
45. Hot water heater
46. Trim at roof edge, see detail 4/A1-7.1
47. Decorative metal gate - see detail 10/A1-7.1
48. Utility floor sink
49. 8" Metal address numbers by Selon, style Futura
50. Copper Craft gabled dormer 24X12, 8IN12; or equal.
51. 1/4" metal control joint
52. Depress slab to receive 6" ceramic tile cove base. Tile to be flush w/ epoxy-sealed conc. floor.
53. 3" DIA. steel pipe column, per Structural
54. Fly Fan above door - connect switch to door.
55. Portable furniture N.I.C.
56. Provide electrical outlets for portable furniture
57. 22"x30" Attic Access Panel

Did Not Hand

KROHI BROESKE ARCHITECTS
8180 BROCKTON AVE. SUITE 202
RIVERSIDE, CA. 92506-2228
TEL 951-788-5940
FAX 951-788-1365
E-MAIL: KBA@KROHIBROESKE.COM

© These drawings are not to be reproduced, changed or copied in any form or manner whatsoever, nor are they to be assigned to any third party, without first obtaining the written permission and consent of Krohi Broeske Architects, Inc.

CLIENT:
CITY OF RIVERSIDE
PARK AND RECREATION DEPARTMENT
3900 MAIN STREET
RIVERSIDE, CA 92501

PROJECT:
REID PARK EXPANSION
801 NORTH ORANGE ST.
RIVERSIDE,CA

REVISIONS	DATE	BY
1	07.12.05	B.M.

LICENSED ARCHITECT
STEVEN MICHAEL KROHI
No. C012790
Ren. 7.31.2005
STATE OF CALIFORNIA

SHEET TITLE

DESIGNED	
DRAWN	A. Torres, B. Mantel, M. Mikhail
CHECKED	B. GRIDLEY
DATE	7.22.04
SCALE	
JOB NO.	03032

SHEET
A1 - 2.3
OF 6 SHEETS

PARK & RECREATION
PLANNING & DESIGN

BID SET 02-06-06

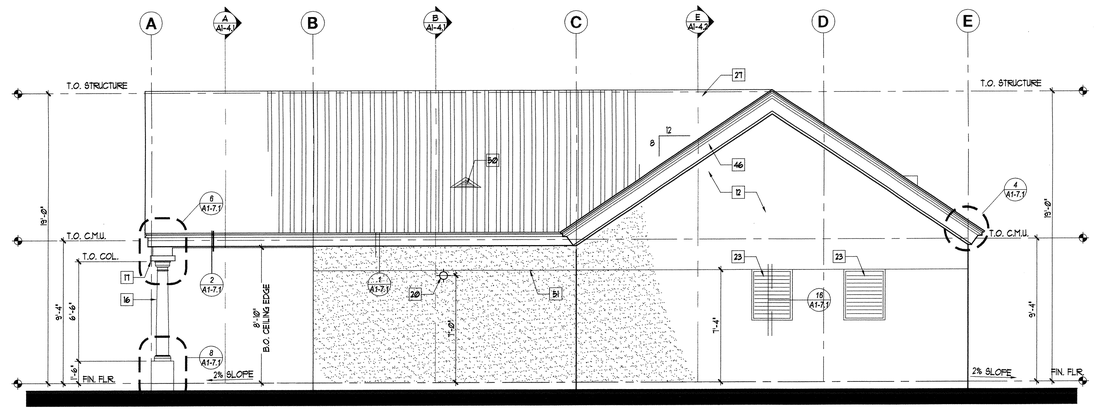

West Elevation 2
1/4"=1'-0"

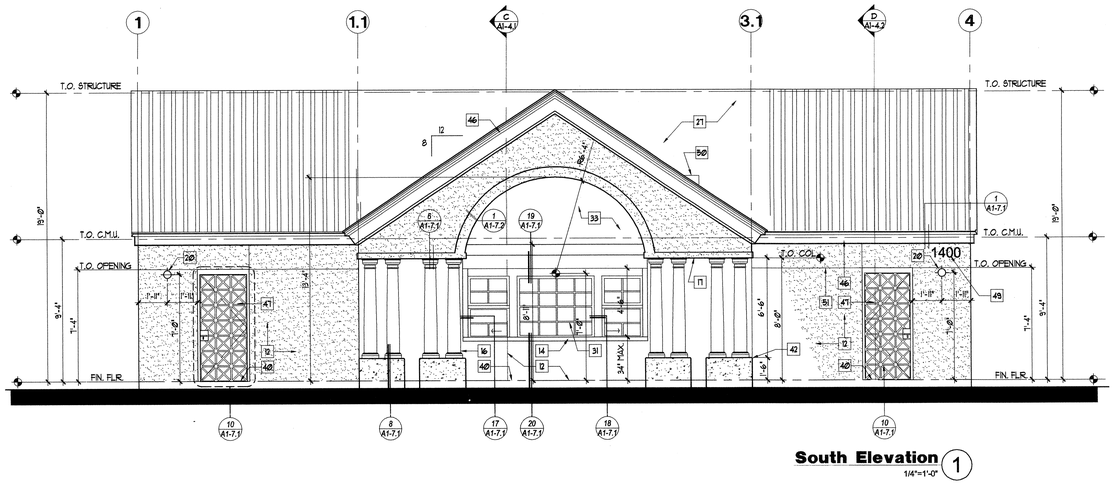

South Elevation 1
1/4"=1'-0"

KEY NOTES

1. Bollards, 6" dia. concrete filled steel
2. All walls to have block filler and epoxy paint system, color per finish schedule
3. Floor drain. See plumbing drawings
4. Chronomite instant hot water heater, model S-461L-See Electrical drawings
5. Thermal insulation per specifications
6. Epoxy-sealed concrete floor with 6" ceramic tile cove base
7. 2% slope toward floor sinks.
8. Toilet partition door to latch to masonry partition or wall, 1/8" clr. space between door & wall latch.
9. Toilet partition - 4" masonry block, 6'-0" +/- height
10. 3 compartment sink
11. Line of roof overhang above
12. 8" CMU walls (typ.) with exterior plaster finish @ exterior face of wall only.
13. Metal roll up door. Heavyduty commercial grade.
14. Stainless steel counter top w/ 6" splash and roll edge
15. Electrical equipment. See electrical plans.
16. Decorative composite columns. Use model TC-7 and base number CB-02-12 by Moonlight Molds (310) 538-9142
17. Exterior plaster soffit
18. Exposed wood framing. Light sand blast and semi transparent stain finish
19. Structural beam. See structural drawings
20. Wall mounted light fixture, See Electrical
21. ⅝" Gyp. Brd. over wood framing.
22. 4" Wide G.I. soffit vent. See detail 14 / A1-7.1
23. Metal Louvers, see dt. 16/A1-7.1
24. Hose bib. See plumbing plans
25. 2x framing w/ plywood, mechanical platform. See structural and mechanical plans.
26. Light fixture. See Electrical plans.
27. Standing Seam Metal Roofing
28. H.C. accessible sign on wall and door. A1-6.1
29. Sanitary ceramic tile cove base
30. 2x6 wood trim plant-on. typ.
31. Vinyl (or steel) framed windows.
32. Integral 6" metal backsplash
33. 2x framing @ 16" o.c. w/ plywood sheathing where occurs, see structural plans.
34. Stainless steel wall panel.
35. Irrigation controllers.
36. W.I. enclosure. 6'-0" high w/ 3'-6" wide gate. 2" sq. frame w/ 10" dia.x18" deep footing @ each post, and 1" sq. pickets @ 4" o.c. max. spacing.
37. Mechanical equipment. See mechanical plans.
38. Sealed concrete slab (thickness per Structural) with 6" ceramic tile coved base.
39. Install conduits per notes 1 & 2 on sheet IP-2
40. 2% max. floor slope at accessible path
41. Hold grade max 1" below finish floor, no slope to exeed 2%
42. Concrete foundation/ base for decorative column.
43. Floor Sink, Jr Smith #2699, see Plumbing sheets
44. C.M.U. wall, 7'-0"+/- height
45. Hot water heater
46. Trim at roof edge, see detail 4/A1-7.1
47. Decorative metal gate - see detail 10/A1-7.1
48. Utility floor sink
49. 8" Metal address numbers by Seton, style Futura
50. Copper Craft gabled dormer 24X12, 8IN12; or equal.
51. 1/4" metal control joint
52. Depress slab to receive 6" ceramic tile cove base. Tile to be flush w/ epoxy-sealed conc. floor.
53. 3" DIA. steel pipe column, per Structural
54. Fly Fan above door - connect switch to door.
55. Portable furniture N.I.C.
56. Provide electrical outlets for portable furniture
57. 22"x30" Attic Access Panel

Did Not Award

KROHI BROESKE ARCHITECTS
6180 BROCKTON AVE. SUITE 202
RIVERSIDE, CA 92506-2228
TEL 951-788-5940
FAX 951-788-1365
E-MAIL KRAH@KROHIBROESKE.COM

© These plans are not to be reproduced, changed or copied in any form or manner whatsoever nor are they to be ... Architects, Inc., copyright reserved. No reproduction, copyright and other property rights to these plans, designed to any third party without the authorization of the express written permission.

CLIENT:
CITY OF RIVERSIDE
PARK AND RECREATION DEPARTMENT
3900 MAIN STREET
RIVERSIDE, CA 92501

PROJECT:
REID PARK EXPANSION
801 NORTH ORANGE ST.
RIVERSIDE,CA

REVISIONS	DATE	BY
1	07.12.05	B.M.

LICENSED ARCHITECT
STEVEN MICHAEL KROH
No. C012790
Ren. 7.31.2005
STATE OF CALIFORNIA

SHEET TITLE

DESIGNED	
DRAWN	A. Torres, B. Mantel, M. Mikhail
CHECKED	B. GRIDLEY
DATE	7.22.04
SCALE	1/4" = 1'-0"
JOB NO.	03032

SHEET
A1 - 3.1

RECEIVED
APR 18 2006
PARK & RECREATION PLANNING & DESIGN

BID SET 02-06-06

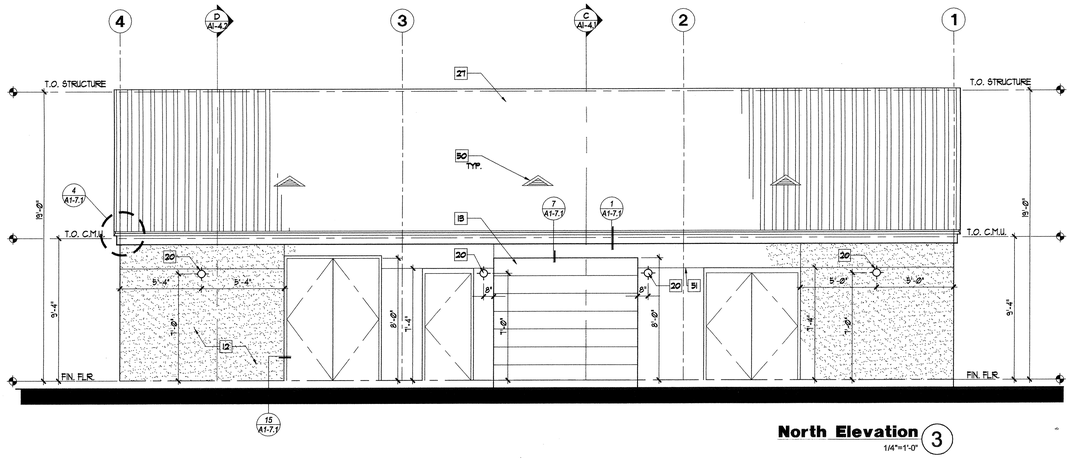

North Elevation 3
1/4"=1'-0"

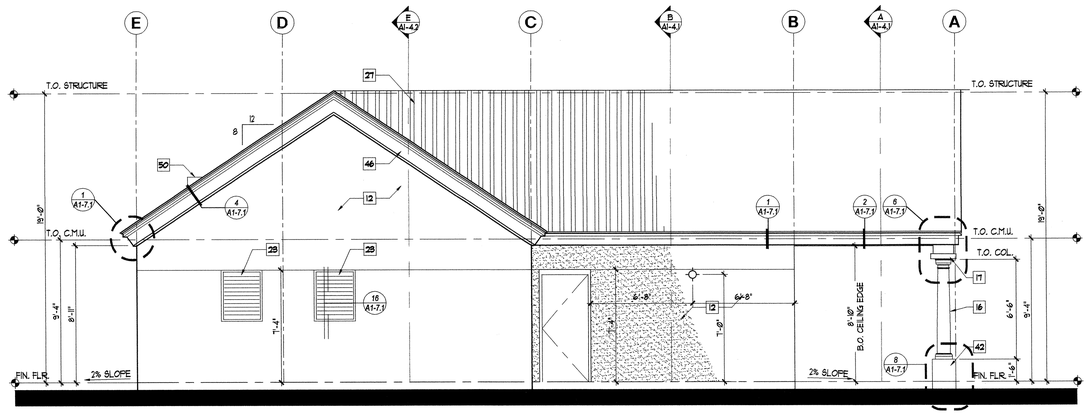

East Elevation 4
1/4"=1'-0"

KEY NOTES

1. Bollards, 6" dia. concrete filled steel
2. All walls to have block filler and epoxy paint system, color per finish schedule
3. Floor drain. See plumbing drawings
4. Chronomite instant hot water heater, model S-161L-See Electrical drawings
5. Thermal insulation per specifications
6. Epoxy-sealed concrete floor with 6" ceramic tile cove base
7. 2% slope toward floor sinks.
8. Toilet partition door to latch to masonry partition or wall, 1/8" clr. space between door & wall latch.
9. Toilet partition - 4" masonry block, 6'-0" +/- height
10. 3 compartment sink
11. Line of roof overhang above
12. 8" CMU walls (typ.) with exterior plaster finish @ exterior face of wall only.
13. Metal roll up door. Heavyduty commercial grade.
14. Stainless steel counter top w/ 6" splash and roll edge
15. Electrical equipment. See electrical plans.
16. Decorative composite columns. Use model TC-7 and base number CB-02-12 by Moonlight Molds (310) 538-9142
17. Exterior plaster soffit
18. Exposed wood framing. Light sand blast and semi transparent stain finish
19. Structural beam. See structural drawings
20. Wall mounted light fixture, See Electrical
21. $\frac{5}{8}$" Gyp. Brd. over wood framing.
22. 4" Wide G.I. soffit vent. See detail 14 / A1-7.1
23. Metal Louvers, see dtl. 16/A1-7.1
24. Hose bib. See plumbing plans
25. 2x framing w/ plywood, mechanical platform. See structural and mechanical plans.
26. Light fixture. See Electrical plans.
27. Standing Seam Metal Roofing
28. H.C. accessible sign on wall and door. A1-6.1
29. Sanitary ceramic tile cove base
30. 2x6 wood trim plant-on. typ.
31. Vinyl (or steel) framed windows.
32. Integral 8" metal backsplash
33. 2x framing @ 16" o.c. w/ plywood sheathing where occurs, see structural plans.
34. Stainless steel wall panel.
35. Irrigation controllers.
36. W.I. enclosure. 6'-0" high w/ 3'-6" wide gate. 2" sq. frame w/ 10" dia.x18" deep footing @ each post, and 1" sq. pickets @ 4" o.c. max. spacing.
37. Mechanical equipment. See mechanical plans.
38. Sealed concrete slab (thickness per Structural) with 6" ceramic tile coved base.
39. Install conduits per notes 1 & 2 on sheet IP-2
40. 2% max. floor slope at accessible path
41. Hold grade max 1" below finish floor, no slope to exceed 2%
42. Concrete foundation/ base for decorative column.
43. Floor Sink, Jr Smith #2699, see Plumbing sheets
44. C.M.U. wall, 7'-0"+/- height
45. Hot water heater
46. Trim at roof edge, see detail 4/A1-7.1
47. Decorative metal gate - see detail 10/A1-7.1
48. Utility floor sink
49. 8" Metal address numbers by Selon, style Futura
50. Copper Craft gabled dormer 24X12, 8IN12; or equal.
51. 1/4" metal control joint
52. Depress slab to receive 6" ceramic tile cove base. Tile to be flush w/ epoxy-sealed conc. floor.
53. 3" DIA. steel pipe column, per Structural
54. Fly Fan above door - connect switch to door.
55. Portable furniture N.I.C.
56. Provide electrical outlets for portable furniture
57. 22"x30" Attic Access Panel

did not Award

KROHI|BROESKE ARCHITECTS
8180 BROCKTON AVE. SUITE 202
RIVERSIDE, CA. 92506-2228
TEL 951-788-5940
FAX 951-788-1365
E-MAIL KBA@KROHIBROESKE.COM

© These plans are not to be reproduced, changed or copied in any form or manner whatsoever, nor are they to be assigned to any third party, without first obtaining the written permission and consent of KROHI|BROESKE Architects, Inc. (KBA)

CLIENT:
CITY OF RIVERSIDE
PARK AND RECREATION DEPARTMENT
3900 MAIN STREET
RIVERSIDE, CA 92501

PROJECT:
REID PARK EXPANSION
801 NORTH ORANGE ST.
RIVERSIDE,CA

REVISIONS	DATE	BY
1	07.12.05	B.M.

LICENSED ARCHITECT STEVEN MICHAEL KROHI No. C012790 Ren. 7.31.2005 STATE OF CALIFORNIA

SHEET TITLE

DESIGNED	
DRAWN	A. Torres, B. Mandel, M. Mikell
CHECKED	B. GRIDLEY
DATE	7.22.04
SCALE	1/4" = 1'-0"
JOB NO.	03032

SHEET
A1-3.2
OF SHEETS

RECEIVED JAN 13 2005 PARK & RECREATION PLANNING & DESIGN

BID SET 02-06-06

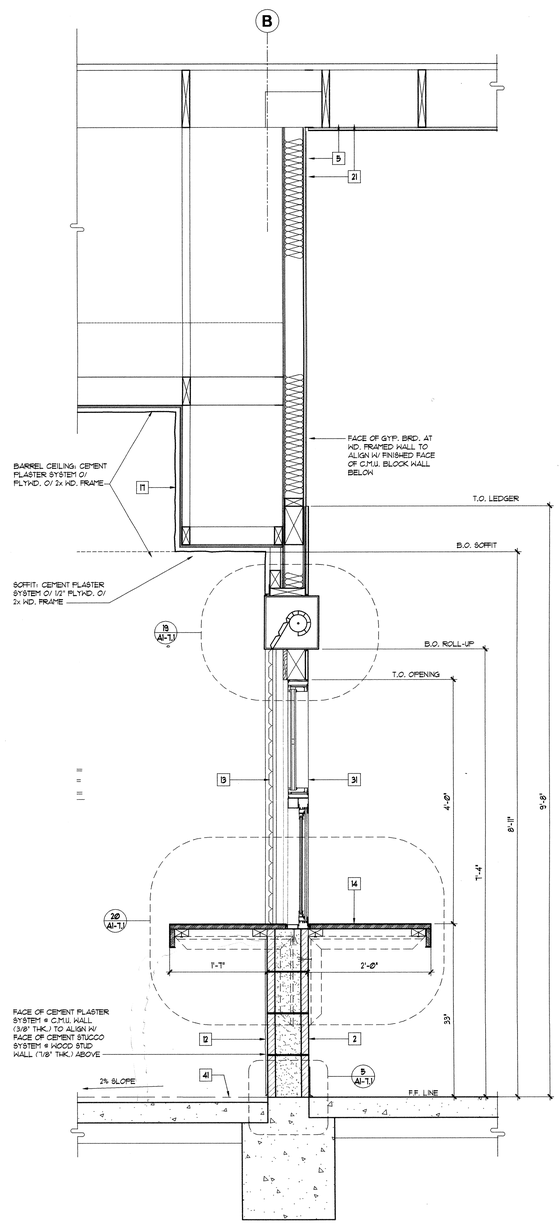

Wall Section 1
1"=1'-0"

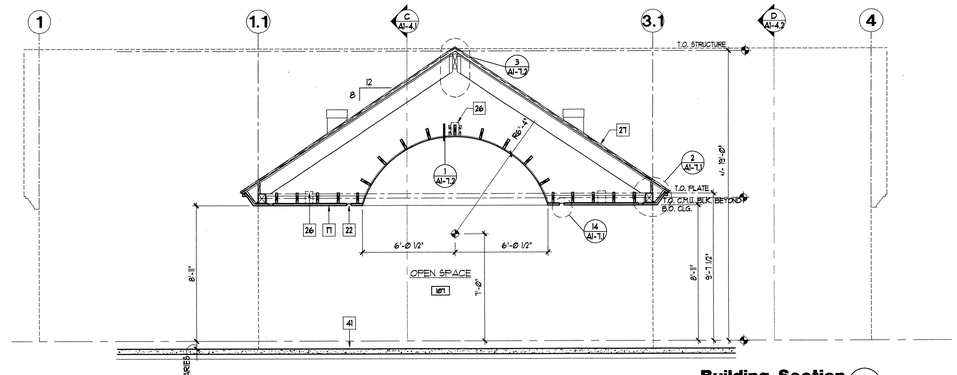

Building Section A
1/4"=1'-0"

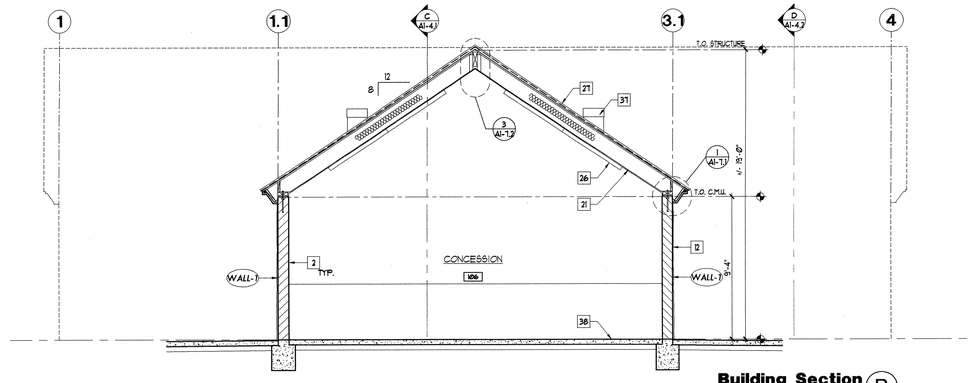

Building Section B
1/4"=1'-0"

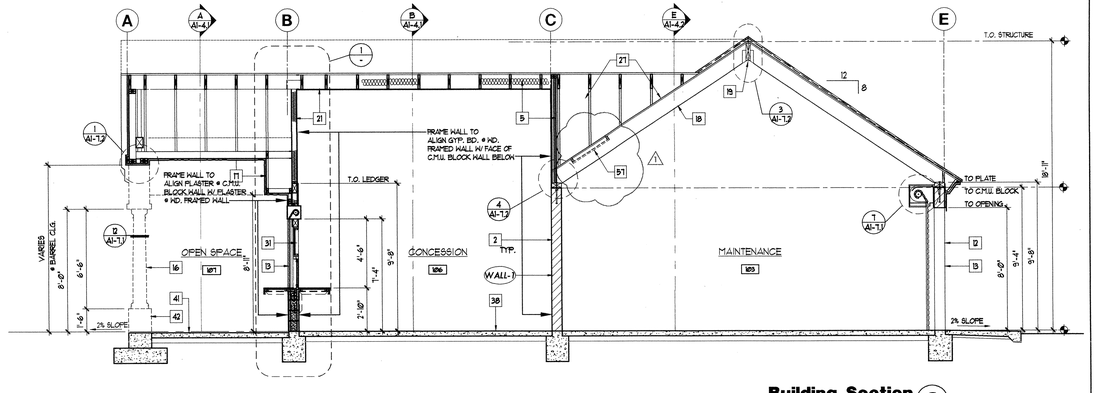

Building Section C
1/4"=1'-0"

KEY NOTES

1. Bollards, 6" dia. concrete filled steel
2. All walls to have block filler and epoxy paint system, color per finish schedule
3. Floor drain. See plumbing drawings
4. Chronomite instant hot water heater, model S-461L-See Electrical drawings
5. Thermal insulation per specifications
6. Epoxy-sealed concrete floor with 6" ceramic tile cove base
7. 2% slope toward floor sinks.
8. Toilet partition door to latch to masonry partition or wall, 1/8" clr. space between door & wall latch.
9. Toilet partition - 4" masonry block, 6'-0" +/- height
10. 3 compartment sink
11. Line of roof overhang above
12. 8" CMU walls (typ.) with exterior plaster finish @ exterior face of wall only.
13. Metal roll up door. Heavyduty commercial grade.
14. Stainless steel counter top w/ 6" splash and roll edge
15. Electrical equipment. See electrical plans.
16. Decorative composite columns. Use model TC-7 and base number CB-02-12 by Moonlight Molds (310) 538-9142
17. Exterior plaster soffit
18. Exposed wood framing. Light sand blast and semi transparent stain finish
19. Structural beam. See structural drawings
20. Wall mounted light fixture. See Electrical
21. $\frac{5}{8}$" Gyp. Brd. over wood framing.
22. 4" Wide G.I. soffit vent. See detail 14 / A1-7.1
23. Metal Louvers, see dtl. 16/A1-7.1
24. Hose bib. See plumbing plans
25. 2x framing w/ plywood, mechanical platform. See structural and mechanical plans.
26. Light fixture. See Electrical plans.
27. Standing Seam Metal Roofing
28. H.C. accessible sign on wall and door. A1-6.1
29. Sanitary ceramic tile cove base
30. 2x6 wood trim plant-on. typ.
31. Vinyl (or steel) framed windows.
32. Integral 8" metal backsplash
33. 2x framing @ 16" o.c. w/ plywood sheathing where occurs, see structural plans.
34. Stainless steel wall panel.
35. Irrigation controllers.
36. W.I. enclosure. 6'-0" high w/ 3'-6" wide gate. 2" sq. frame w/ 10" dia.x18" deep footing @ each post, and 1" sq. pickets @ 4" o.c. max. spacing.
37. Mechanical equipment. See mechanical plans.
38. Sealed concrete slab (thickness per Structural) with 6" ceramic tile coved base.
39. Install conduits per notes 1 & 2 on sheet IP-2
40. 2% max. floor slope at accessible path
41. Hold grade max 1" below finish floor, no slope to exeed 2%
42. Concrete foundation/ base for decorative column.
43. Floor Sink, Jr Smith #2699, see Plumbing sheets
44. C.M.U. wall, 7'-0"+/- height
45. Hot water heater
46. Trim at roof edge, see detail 4/A1-7.1
47. Decorative metal gate - see detail 10/A1-7.1
48. Utility floor sink
49. 8" Metal address numbers by Seton, style Futura
50. Copper Craft gabled dormer 24X12, 8IN12; or equal.
51. 1/4" metal control joint
52. Depress slab to receive 6" ceramic tile cove base. Tile to be flush w/ epoxy-sealed conc. floor.
53. 3" DIA. steel pipe column, per Structural
54. Fly Fan above door - connect switch to door.
55. Portable furniture N.I.C.
56. Provide backflow prevent for portable furniture
57. 22"x30" Attic Access Panel

LEGEND

WALL-1	MAS. WALL - +9'-4" A.F.F.
WALL-2	MAS. WALL - +11'-2' A.F.F.
WALL-3	MAS. WALL - +13'-9" A.F.F.
WALL-4	MAS. WALL - +15'-8" A.F.F.
WALL-5	MAS. WALL - SLOPE AT 8:12 TO MATCH ROOF SLOPE

did not award

BID SET 02-06-06

KROHI BROESKE ARCHITECTS
6180 BROCKTON AVE, SUITE 202
RIVERSIDE, CA. 92506-2228
TEL 951-788-5940
FAX 951-788-1385
E-MAIL: KBA@KROHIBROESKE.COM

© These plans are not to be reproduced, changed or copied in any form or manner whatsoever, nor are they to be assigned to any third party, without first obtaining the written permission and consent of Krohi Broeske Architects, A Professional Corporation.

CLIENT:
CITY OF RIVERSIDE
PARK AND RECREATION DEPARTMENT
3900 MAIN STREET
RIVERSIDE, CA 92501

PROJECT:
REID PARK EXPANSION
801 NORTH ORANGE ST.
RIVERSIDE, CA

REVISIONS	DATE	BY
1	07.12.05	B.M.

LICENSED ARCHITECT BARRY MICHAEL GRIDLEY No. C012790 Ren. 7.31.2005 STATE OF CALIFORNIA

CONSTRUCTION

SHEET TITLE

DESIGNED	
DRAWN	A. Torres, B. Martel, M. Mihail
CHECKED	B. GRIDLEY
DATE	7.22.04
SCALE	
JOB NO.	03032

SHEET
A1 - 4.1
SHEETS

RECEIVED APR 18 2006 PARK & RECREATION PLANNING & DESIGN

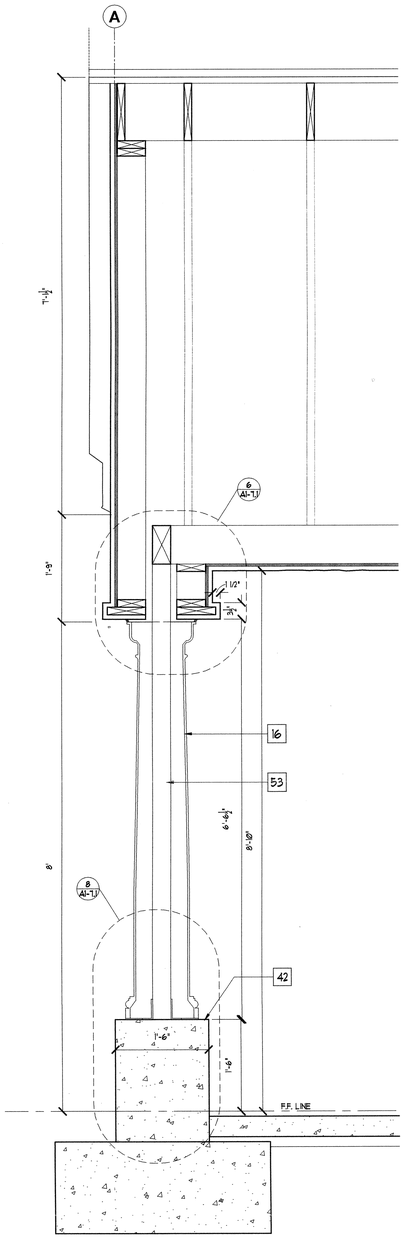

Wall Section 2
1"=1'-0"

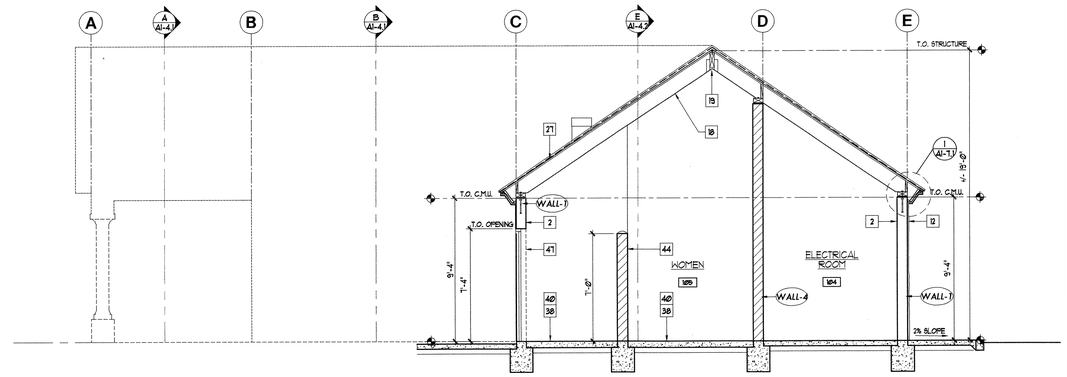

Building Section D
1/4"=1'-0"

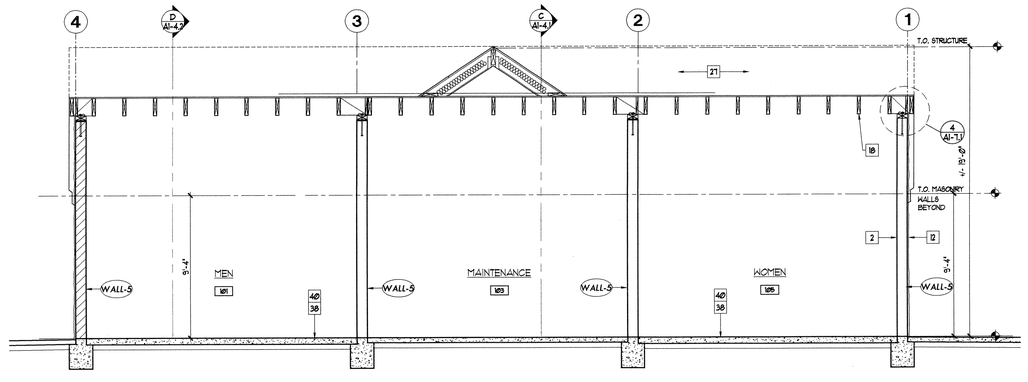

Building Section E
1/4"=1'-0"

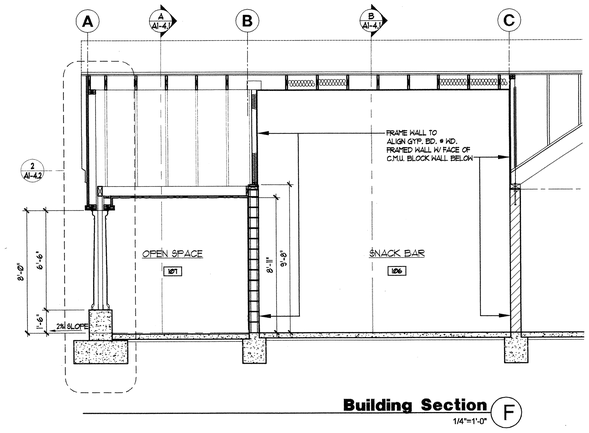

Building Section F
1/4"=1'-0"

KEY NOTES

1. Bollards, 6" dia. concrete filled steel
2. All walls to have block filler and epoxy paint system, color per finish schedule
3. Floor drain. See plumbing drawings
4. Chromcrile instant hot water heater, model S-461L-See Electrical drawings
5. Thermal insulation per specifications
6. Epoxy-sealed concrete floor with 6" ceramic tile cove base
7. 2% slope toward floor sinks.
8. Toilet partition door to latch to masonry partition or wall, 1/8" clr. space between door & wall latch.
9. Toilet partition - 4' masonry block, 6'-0" +/- height
10. 3 compartment sink
11. Line of roof overhang above
12. 8" CMU walls (typ.) with exterior plaster finish @ exterior face of wall only.
13. Metal roll up door. Heavyduty commercial grade.
14. Stainless steel counter top w/ 6" splash and roll edge
15. Electrical equipment. See electrical plans.
16. Decorative composite columns. Use model TC-7 and base number CB-02-12 by Moonlight Molds (310) 538-9142
17. Exterior plaster soffit
18. Exposed wood framing. Light sand blast and semi transparent stain finish
19. Structural beam. See structural drawings
20. Wall mounted light fixture, See Electrical
21. $\frac{5}{8}$" Gyp. Brd. over wood framing.
22. 4" Wide G.I. soffit vent. See detail 14 / A1-7.1
23. Metal Louvers, see dtl. 16/A1-7.1
24. Hose bib. See plumbing plans
25. 2x framing w/ plywood, mechanical platform. See structural and mechanical plans.
26. Light fixture. See Electrical plans.
27. Standing Seam Metal Roofing
28. H.C. accessible sign on wall and door. A1-6.1
29. Sanitary ceramic tile cove base
30. 2x6 wood trim plant-on. typ.
31. Vinyl (or steel) framed windows.
32. Integral 8" metal backsplash
33. 2x framing @ 16" o.c. w/ plywood sheathing where occurs, see structural plans.
34. Stainless steel wall panel.
35. Irrigation controllers.
36. W.I. enclosure. 6'-0" high w/ 3'-6" wide gate. 2" sq. frame w/ 10" dia.x18" deep footing @ each post, and 1" sq. pickets @ 4" o.c. max. spacing.
37. Mechanical equipment. See mechanical plans.
38. Sealed concrete slab (thickness per Structural) with 6" ceramic tile coved base.
39. Install conduits per notes 1 & 2 on sheet IP-2
40. 2% max. floor slope at accessible path
41. Hold grade max 1" below finish floor, no slope to exeed 2%
42. Concrete foundation/ base for decorative column.
43. Floor Sink, Jr Smith #2699, see Plumbing sheets
44. C.M.U. wall, 7'-0"+/- height
45. Hot water heater
46. Trim at roof edge, see detail 4/A1-7.1
47. Decorative metal gate - see detail 10/A1-7.1
48. Utility floor sink
49. 8" Metal address numbers by Selon, style Futura
50. Copper Craft gabled dormer 24X12, 8IN12; or equal.
51. 1/4" metal control joint
52. Depress slab to receive 6" ceramic tile cove base. Tile to be flush w/ epoxy-sealed conc. floor.
53. 3" DIA. steel pipe column, per Structural
54. Fly Fan above door - connect switch to door.
55. Portable furniture N.I.C.
56. Provide electrical outlets for portable furniture
57. 22"x30" Attic Access Panel

LEGEND

WALL-1	MAS. WALL - +9'-4" A.F.F.
WALL-2	MAS. WALL - +11'-2" A.F.F.
WALL-3	MAS. WALL - +13'-9" A.F.F.
WALL-4	MAS. WALL - +15'-8" A.F.F.
WALL-5	MAS. WALL - SLOPE ATTIC TO MATCH ROOF SLOPE

did not award

KROH | BROESKE ARCHITECTS
6195 BROCKTON AVE. SUITE 202
RIVERSIDE, CA. 92506-2228
TEL 951-788-5940
FAX 951-788-1365
E-MAIL: KBA@KROHBROESKE.COM

© These plans are not to be copied and copyright protection is to be kept per copyright laws. Title to the plans remains the property of the Kroh & Broeske Architects, Inc. and may be used only for the specified project and only as long as the owner pays the agreed fees. Without written permission, no other use is permitted.

CLIENT:
CITY OF RIVERSIDE
PARK AND RECREATION DEPARTMENT
3900 MAIN STREET
RIVERSIDE, CA 92501

PROJECT:
REID PARK EXPANSION
801 NORTH ORANGE ST.
RIVERSIDE,CA

REVISIONS	DATE	BY
1	07.12.05	B.M.

LICENSED ARCHITECT STEVEN MICHAEL KROH No. 0012790 Ren. 7.31.2005 STATE OF CALIFORNIA

SHEET TITLE

DESIGNED	
DRAWN	A. Torres, B. Marsel, M. Mikhail
CHECKED	B. GRIDLEY
DATE	7.22.04
SCALE	1/4" = 1'-0"
JOB NO.	03032

SHEET A1 - 4.2 SHEETS

RECEIVED APR 0 2 2006 PARK & RECREATION PLANNING & DESIGN

BID SET 02-06-06

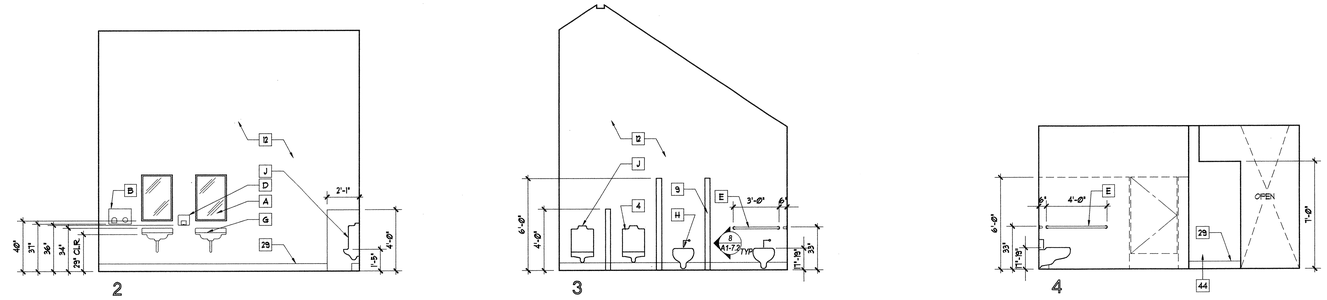

MEN - ROOM 101

1/4"=1'-0"

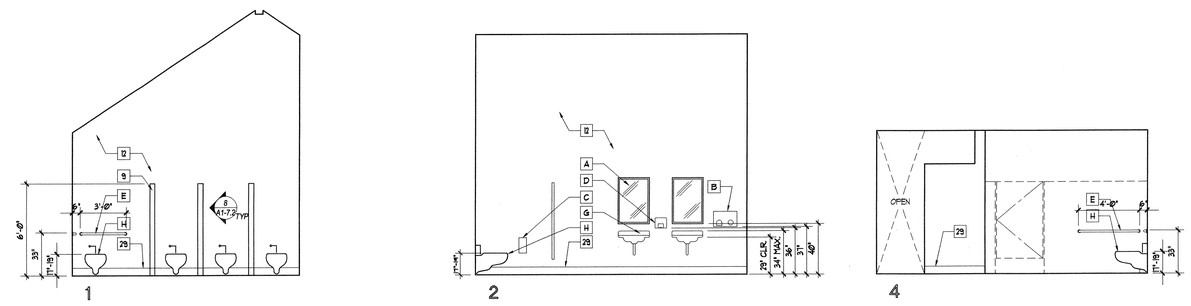

WOMEN - ROOM 105

1/4"=1'-0"

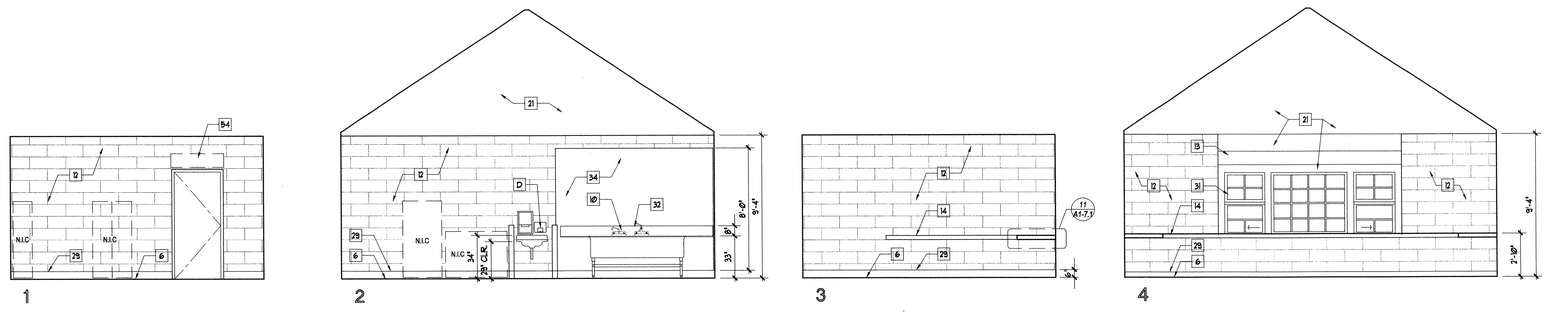

SNACK BAR - ROOM 106

1/4"=1'-0"

KEY NOTES

1. Bollards, 6" dia. concrete filled steel
2. All walls to have block filler and epoxy paint system, color per finish schedule
3. Floor drain. See plumbing drawings
4. Chronomite instant hot water heater, model S-461L-See Electrical drawings
5. Thermal insulation per specifications
6. Epoxy-sealed concrete floor with 6" ceramic tile cove base
7. 2% slope toward floor sinks.
8. Toilet partition door to latch to masonry partition or wall, 1/8" clr. space between door & wall latch.
9. Toilet partition - 4" masonry block, 6'-0" +/- height
10. 3 compartment sink
11. Line of roof overhang above
12. 8" CMU walls (typ.) with exterior plaster finish @ exterior face of wall only.
13. Metal roll up door. Heavyduty commercial grade.
14. Stainless steel counter top w/ 6" splash and roll edge
15. Electrical equipment. See electrical plans.
16. Decorative composite columns. Use model TC-7 and base number CB-02-12 by Moonlight Molds (310) 538-9142
17. Exterior plaster soffit
18. Exposed wood framing. Light sand blast and semi transparent stain finish
19. Structural beam. See structural drawings
20. Wall mounted light fixture, See Electrical
21. 2" Gyp. Brd. over wood framing.
22. 4" Wide G.I. soffit vent. See detail 14 / A1-7.1
23. Metal Louvers, see dtl. 16/A1-7.1
24. Hose bib. See plumbing plans
25. 2x framing w/ plywood, mechanical platform. See structural and mechanical plans.
26. Light fixture. See Electrical plans.
27. Standing Seam Metal Roofing
28. H.C. accessible sign on wall and door. A1-6.1
29. Sanitary ceramic tile cove base
30. 2x6 wood trim plant-on. typ.
31. Vinyl (or steel) framed windows.
32. Integral 8" metal backsplash
33. 2x framing @ 16" o.c. w/ plywood sheathing where occurs, see structural plans.
34. Stainless steel wall panel.
35. Irrigation controllers.
36. W.I. enclosure. 6'-0" high w/ 3'-6" wide gate. 2" sq. frame w/ 10" dia.x18" deep footing @ each post, and 1" sq. pickets @ 4" o.c. max. spacing.
37. Mechanical equipment. See mechanical plans.
38. Sealed concrete slab (thickness per Structural) with 6" ceramic tile coved base.
39. Install conduits per notes 1 & 2 on sheet IP-2
40. 2% max. floor slope at accessible path
41. Hold grade max 1" below finish floor, no slope to exeed 2%
42. Concrete foundation/ base for decorative column.
43. Floor Sink, Jr Smith #2699, see Plumbing sheets
44. C.M.U. wall, 7'-0"+/- height
45. Hot water heater
46. Trim at roof edge, see detail 4/A1-7.1
47. Decorative metal gate - see detail 10/A1-7.1
48. Utility floor sink
49. 8" Metal address numbers by Seton, style Futura
50. Copper Craft gabled dormer 24X12, 8IN12; or equal
51. 1/4" metal control joint
52. Depress slab to receive 6" ceramic tile cove base. Tile to be flush w/ epoxy-sealed conc. floor.
53. 3" DIA. steel pipe column, per Structural
54. Fly Fan above door - connect switch to door.
55. Portable furniture N.I.C.
56. Provide electrical outlets for portable furniture
57. 22"x30" Attic Access Panel

Restroom Accessory Schedule

A	MIRROR; POLISHED STAINLESS STEEL REFLECTIVE PANEL	
B	HAND BLOW-DRYER: FASTAIRE MODEL HD-03	
C	TOILET TISSUE DISP.	ASLIN IND. MODEL #: TPD0250WB-SS
D	SOAP DISP. (RECESSED)	B-4063
E	1 1/4"Ø GRAB BARS	B-5837
F	NOT USED	
G	LAVATORY; AMERICAN STANDARD LUCERNE WALL HUNG, MODEL 0355.012 (WHITE) CHICAGO FAUCET MODEL: 802A335	
H	TOILET, AMERICAN STANDARD AFWALL EL1.6, MODEL 2258.125 WOTJ P,SPMOTE 95 COMFORT CURVE SEAT (WHITE), REGAL FLUSHMETER MODEL: 114-1.6	
J	URINAL, AMERICAN STANDARD LYNBROOK 1.0, MODEL: 6605.027, REGAL FLUSHOMETER 190-1	

KROHI BROESKE ARCHITECTS
8180 BROCKTON AVE, SUITE 202
RIVERSIDE, CA. 92506-2228
TEL 951-788-5940
FAX 951-788-1365
E-MAIL: KBA@KROHIBROESKE.COM

© These drawings and data are to be reproduced, changed or copied in any form or manner whatsoever nor are they to be assigned to any third party without first obtaining the express written permission and consent of Krohi Broeske Architects, Inc. Krohi Broeske Architects, Inc. reserves the common law copyright and other property rights in these plans, specifications, ideas, designs and arrangements.

CLIENT:
CITY OF RIVERSIDE
PARK AND RECREATION DEPARTMENT
3900 MAIN STREET
RIVERSIDE, CA 92501

PROJECT:
REID PARK EXPANSION
801 NORTH ORANGE ST.
RIVERSIDE,CA

Did not Award

REVISIONS	DATE	BY
1	07.12.05	B.M.

LICENSED ARCHITECT — STANLEY MICHAEL BROSKE — No. C012790 Ren. 7.31.2005 — STATE OF CALIFORNIA

SHEET TITLE

DESIGNED	
DRAWN	A. Torres, B. Mancel, M. Mikhail
CHECKED	B. GRIDLEY
DATE	7.22.04
SCALE	
JOB NO.	03032

SHEET A1 - 5.1 OF SHEETS

RECEIVED APR 17 2006 PARK & RECREATION PLANNING & DESIGN

NOT FOR CONSTRUCTION

BID SET 02-06-06

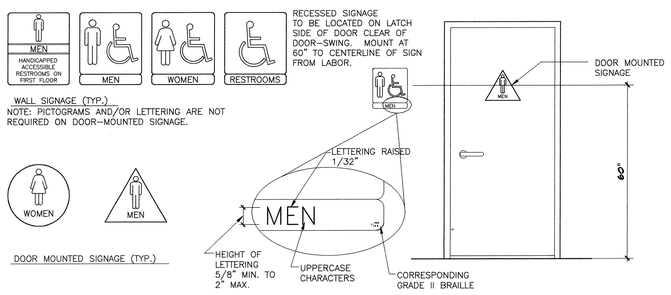

RESTROOM DOOR SYMBOLS SCALE 1/2" = 1'-0"

HARDWARE LIST

HW SET: 01
BLDG. 1, Doors # 1,4

Each SINGLE DOOR To Have:				NON-RTD	
3	EA	BALL BRG HINGE	BB1279 4.5X4.5NRP	630	HAG
1	EA	ENTRANCE LOCK	D53RHO	626	SCH
1	EA	CLOSER	4041	689	LCN
1	EA	FLOOR STOP	1211	630	TRI
1	EA	DOOR BOTTOM	315CN36	AL	PEM
1	EA	THRESHOLD	271A-36" MSA	AL	PEM
1	EA	SMOKE SEAL	S88	BLK	PEM
1	EA	CYLINDER	23-0030	626	SCH
1	EA	DEADBOLT	B660P	626	SCH

HW SET: 02
BLDG. 1, Doors # 3,6

Each SINGLE DOOR To Have:				NON-RTD	
6	EA	BALL BRG HINGE	BB1279 4.5X4.5NRP	630	HAG
1	EA	ENTRANCE LOCK	D53RHO	626	SCH
1	EA	THRESHOLD	271A-36" MSA	AL	PEM
2	EA	SMOKE SEAL	S88	BLK	PEM
2	EA	FLUSH BOLTS	FB458	US26D	IVES
1	EA	CYLINDER	23-0030	626	SCH
1	EA	DEADBOLT	B660P	626	SCH
1	EA	FLOOR STOP	1211	630	TRI

HW SET: 02
BLDG. 1, Doors # 2,7

Each SINGLE DOOR To Have:				NON-RTD	
4	EA	HINGE	42 FBP 100	STL	MAR
1	EA	DEADBOLT	B660P	626	SCH

ROOM FINISH SCHEDULE

No.	ROOM	FLR.	BASE	WALLS 1	WALLS 2	WALLS 3	WALLS 4	WAINSCOT 1	WAINSCOT 2	WAINSCOT 3	WAINSCOT 4	CLG.	HGT.	REMARKS
	RESTROOM & CONCESSION BUILDING													
101	MEN	A/1	B/-	A/2/3	A/2/3	A/2/3	A/2/3					B/2	VARIES	
102	STORAGE	A/1	-/-	A/1	A/1	A/1	A/1					B/-	VARIES	
103	MAINTENANCE ROOM	A/1	A/1	A/1	A/1	A/1	A/1					B/-	VARIES	
104	ELECTRICAL	A/1	-/-	A/-	A/-	A/-	A/-					B/-	VARIES	
105	WOMEN	A/1	B/-	A/3	A/3	A/3	A/3					B/2	VARIES	
106	CONCESSION	A/1	B/-	A/2/3	A/2/3	A/2/3	A/2/3					A/1	VARIES	
107	OPEN SPACE	A/-	-/-	-/-	D/1	-/-	-/-					A/1	VARIES	

ROOM FINISH MATERIALS

FLOOR No.	FLOOR MATERIAL	BASE No.	BASE MATERIAL	WALL No.	WALL MATERIAL	WAINSCOT No.	WAINSCOT MATERIAL	CEILING No.	CEILING MATERIAL
A	CONC.	A	4" RUBBER COVE	A	C.M.U.	A	FIBER REINF. PANEL	A	5/8" GYP. BD.
B	CERAMIC TILE	B	CERAMIC TILE	B	5/8" GYP. BD.	B	CERAMIC TILE	B	EXPOSED FRAMING
C	VCT	C		C	CERAMIC TILE	C		C	EXTERIOR CEMENT PLASTER SYSTEM
D		D		D	EXTERIOR CEMENT PLASTER SYSTEM	D		D	
E		E		E		E		E	

MATERIAL FINISH

FLOOR No.	FLOOR FINISH	BASE No.	BASE FINISH	WALL No.	WALL FINISH	WAINSCOT No.	WAINSCOT FINISH	CEILING No.	CEILING FINISH
1	SMOOTH/SEALED	1	FACTORY	1	PAINT ENAMAL GLOSS	1	FACTORY FINISH	1	PAINT ENAMAL GLOSS
2	FACTORY FINISH	2	PAINT ENAMAL GLOSS	2	FILLER	2		2	SEMI-TRANSP. STAIN
3		3		3	EPOXY PAINT	3		3	
4		4		4	FACTORY FINISH	4		4	
5		5		5		5		5	

DOOR LEGEND

MTL.	- 16 GA. METAL
ALUM.	- ALUMINUM
WOOD S.G.	- STAIN GRADE
	- PREFINISHED (ALTERNATE)
F.F.	- FACTORY FINISH
S.G.	- SEMI-GLOSS
S.	- STAIN
H.M.	- HOLLOW METAL
ALUM.	- ALUMINUM
F.V.	- FIELD VARIFY

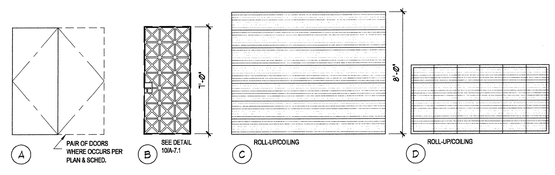

DOOR TYPES

DOOR HARDWARE NOTES

1. HARDWARE FINISHES AS SELECTED BY OWNER AND USER.
2. KEYING AS DIRECTED BY OWNER AND USER.
3. PROVIDE OTHER HARDWARE NOT LISTED BUT IS REQUIRED FOR A FULLY COMPLETE OPERABLE HARDWARE INSTALLATION.

DOOR HARDWARE GROUPS

1. HINGES, CLOSER, COORDNATOR, PANIC HARDWARE, SEALS & STOP.
2. HINGES, LEVER LOCKSET, SEALS & STOP.
3. HINGES, LEVER LOCKSET & STOP.
4. HINGES, MANUAL FLUSH BOLTS, LEVER LOCKSET & SEALS.

NO.	TYPE	SIZE W	SIZE H	DOOR THICK.	DOOR MATERIAL	DOOR FIN.	DOOR GLASS	FRAME MAT.	FRAME FIN.	DETAILS HEAD	DETAILS STRIKE	DETAILS HINGE	DETAILS SILL	HDWR.	* = TEMPERED AS REQUIRED BY CODE REMARKS
1	A	3'-0"	7'-0"	1 3/4"	H.M.	S.G.	-	H.M.	S.G.	2 AI-7.1	15 AI-7.1	15 AI-7.1	- -	1	
2	B	3'-0"	7'-0"	1 3/4"	MTL.	S.G.	-	MTL.	F.F.	6 AI-7.1	10 AI-7.1		- -	3	SEE DETAIL 10/AI--7.1
3	A (PR.)	3'-0"	8'-0"	1 3/4"	H.M.	S.G.	-	H.M.	S.G.	15 AI-7.1	- -	15 AI-7.1	- -	2	
4	A	3'-0"	7'-0"	1 3/4"	H.M.	S.G.	-	H.M.	S.G.	2 AI-7.1	15 AI-7.1	15 AI-7.1	- -	1	
5	C	9'-4"	8'-0"	-	ALUM.	S.G.	-	MTL.	F.F	7 AI-7.1	- -	- -	- -	-	ROLL-DOWN DOOR, HARDWARE BY MANUF.
6	A (PR.)	3'-0"	7'-0"	1 3/4"	STL.	S.G.	-	H.M.	S.G.	2 AI-7.1	- -	15 AI-7.1	- -	2	
7	B	3'-0"	7'-0"	1 3/4"	MTL.	S.G.	-	MTL.	F.F	6 AI-7.1	10 AI-7.1		- -	3	SEE DETAIL 10/AI--7.1
8	D	12'-0" F.V.	4'-6" F.V.	-	ALUM.	F.F.	-	MTL.	F.F	15 AI-7.1	- -	- -	20 AI-7.1	-	ROLL-DOWN DOOR, HARDWARE BY MANUF., (7/AI-7.1-20/AI-7.1

Exit doors shall be openable from the inside without use of a key or any special knowledge or effort. Title 24, Section 1004.3
Width and height of required exit doorways to comply with Title 24, Section 1003.2.
Fire resistive assemblies for protection of openings to comply with Title 24, Sections 302 and 713.

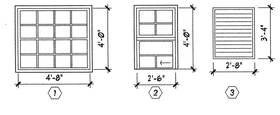

WINDOW TYPES

WINDOW SCHEDULE

NO.	TYPE	SIZE WIDTH	SIZE HEIGHT	GLASS THICK.	GLASS FIN.	GLASS TEMP.	FRAME MAT.	FRAME FIN.	HEAD	JAMB	MULL.	* = TEMPERED AS REQUIRED BY CODE REMARKS
A	3	2'-8"	3'-4"			*	STL.	S.G.				LOUVER, SEE DETAIL 16/AI-7.1
B	1	4'-8"	4'-0"	1/4"	CLR.	*	STL.	S.G.	17 AI-7.1	18 AI-7.1		~~SELF-CLOSING PASS-THRU WINDOW~~
C	2	2'-6"	4'-0"	1/4"	CLR.	*	STL.	S.G.	17 AI-7.1	18 & 19 AI-7.1		SELF-CLOSING PASS-THRU WINDOW

RECEIVED APR 18 2006 PARK & RECREATION DEVELOPMENT DESIGN

BID SET 02-06-06

KROHI|BROESKE ARCHITECTS
6160 BRICKTON AVE. SUITE 202
RIVERSIDE, CA. 92506-2226
TEL 951-788-5940
FAX 951-788-1365
E-MAIL KSA@KROHIBROESKE.COM

© These plans are not to be reproduced, changed or copied in any form or manner whatsoever, nor are they to be assigned to any third party, without first obtaining the written permission and consent of Krohi|Broeske Architects, Inc.

CLIENT:
CITY OF RIVERSIDE
PARK AND RECREATION DEPARTMENT
3900 MAIN STREET
RIVERSIDE, CA 92501

PROJECT:
REID PARK EXPANSION
801 NORTH ORANGE ST.
RIVERSIDE,CA

Not Approved

REVISIONS	DATE	BY
1	07.12.05	B.M.

REGISTERED ARCHITECT RAYMOND MICHAEL BROESKE No. C012790 Exp. 7.31.2005 STATE OF CALIFORNIA

SHEET TITLE

DESIGNED	
DRAWN	A. Torres, B. Mandel, M. Mikhail
CHECKED	B. GRIDLEY
DATE	7.22.04
SCALE	
JOB NO.	03032

SHEET A 1- 6.1
OF SHEETS

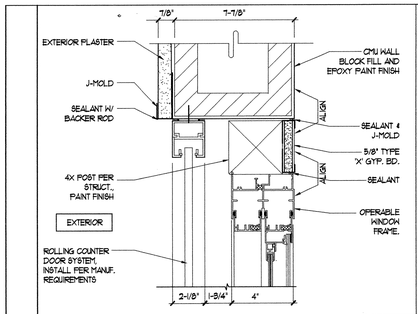

ROLL-UP DOOR JAMB — SCALE 3"=1'-0" — 17

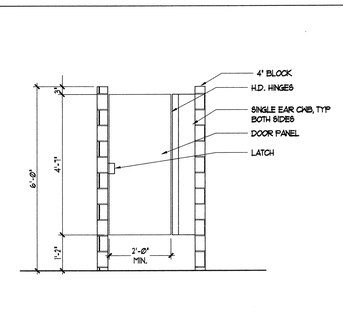

TYP. STALL DOOR — SCALE 1/2" = 1'-0" — 13

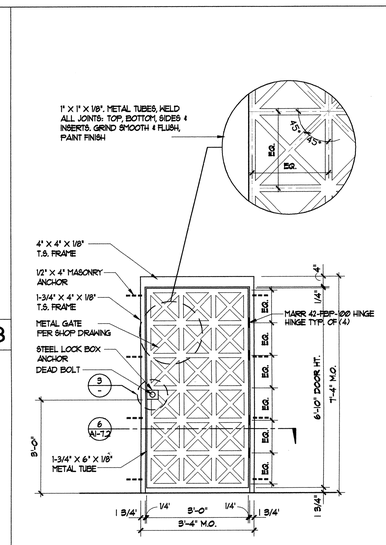

NOTES:
1. DEAD BOLT: MIN. 1" THROW KEY OPERATION BOTH SIDES. PROVIDE ALL CUTOUTS, ETC.
2. FIELD VERIFY ACTUAL GATE SIZE.
3. (2) PAIR OF HEAVY DUTY BUTT HINGES PER GATE. WELD TO GATE & FRAME.
4. PRIME & PAINT GATES & FRAME.

GATE — SCALE 1/2" = 1'-0" — 10

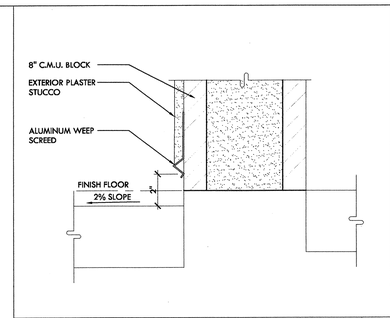

SCREED — SCALE 3"=1'-0" — 5

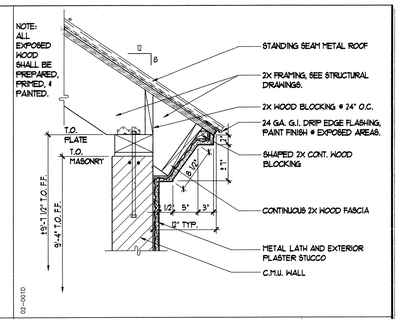

CORNICE @ EAVE — SCALE 1" = 1'-0" — 1

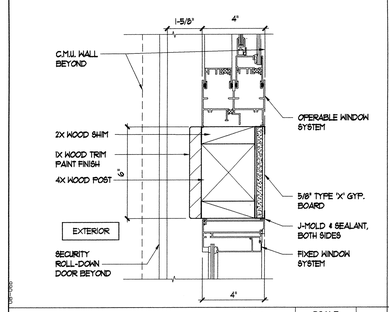

WINDOW JAMB @ POST — SCALE 3"=1'-0" — 18

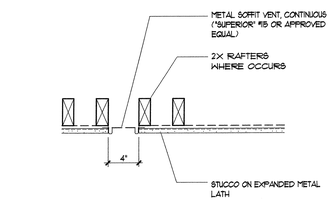

PLASTER VENT SCREED — SCALE 1 1/2" = 1'-0" — 14

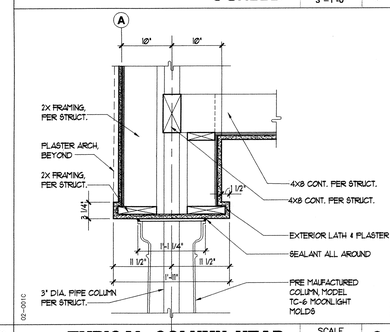

TYPICAL COLUMN HEAD — SCALE 1" = 1'-0" — 6

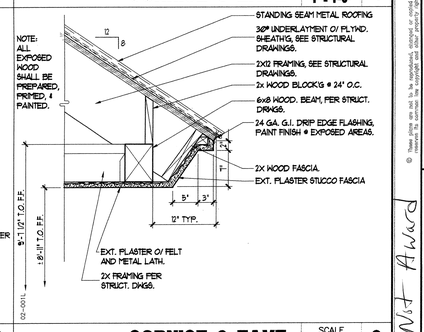

CORNICE @ EAVE — SCALE 1" = 1'-0" — 2

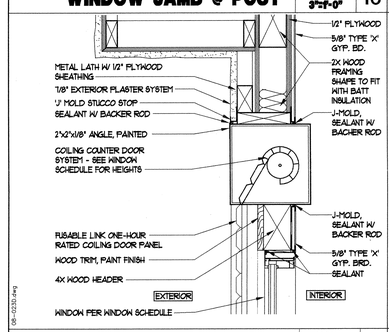

COILING DOOR @ COUNTER — SCALE 1 1/2" = 1'-0" — 19

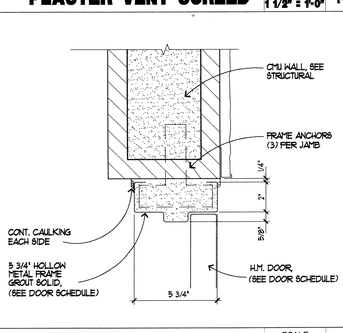

EXTERIOR H.M. JAMB — SCALE 3" = 1'-0" — 15

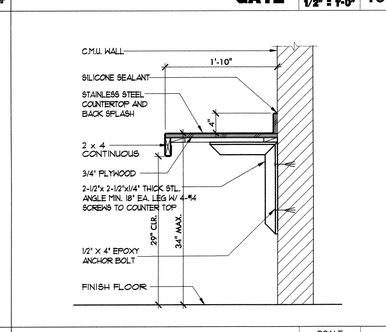

COUNTERTOP — SCALE 1" = 1'-0" — 11

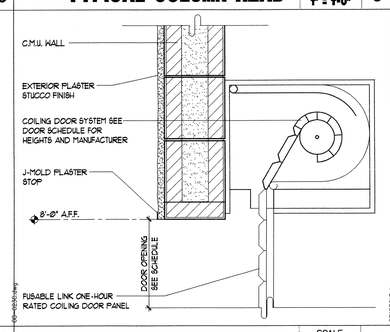

COILING DOOR HEAD — SCALE 1 1/2" = 1'-0" — 7

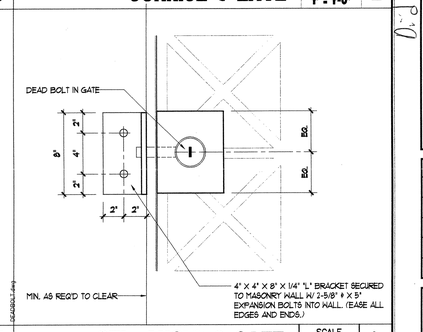

STL. ANGLE @ GATE — SCALE 2" = 1'-0" — 3

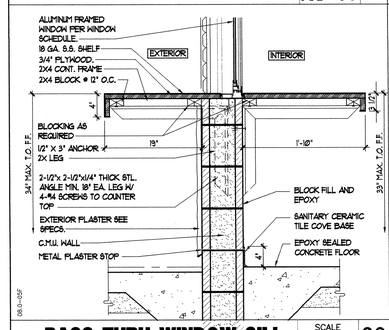

PASS-THRU WINDOW-SILL — SCALE 1" = 1'-0" — 20

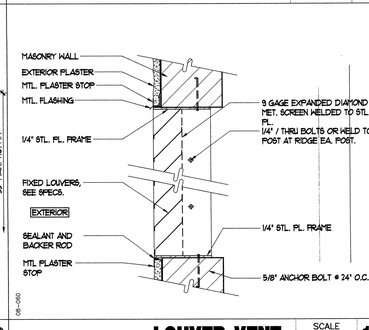

LOUVER VENT — SCALE 1 1/2" = 1'-0" — 16

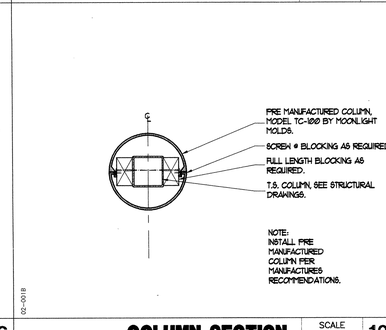

COLUMN SECTION — SCALE 1" = 1'-0" — 12

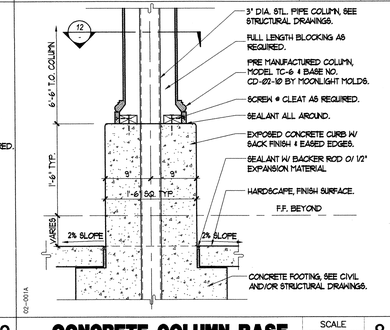

CONCRETE COLUMN BASE — SCALE 1" = 1'-0" — 8

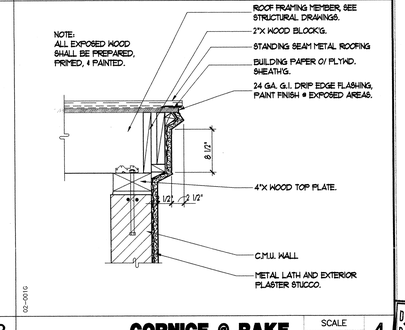

CORNICE @ RAKE — SCALE 1" = 1'-0" — 4

BID SET 02-06-06

KROHI BROESKE ARCHITECTS
4180 BROCKTON AVE. SUITE 202
RIVERSIDE, CA. 92506-2228
TEL 951-788-5940
FAX 951-788-1365
EMAIL: KSA@KROHIBROESKE.COM

© These plans are not to be reproduced, copied or used in any form or manner whatsoever, nor are they to be loaned, assigned to, or shown to a competitive architectural firm, in whole or in part, without the express written consent of Krohi Broeske Architects. These drawings are the property of Krohi Broeske Architects and shall remain the sole property thereof.

CLIENT:
CITY OF RIVERSIDE
PARK AND RECREATION DEPARTMENT
3900 MAIN STREET
RIVERSIDE, CA 92501

Not Awarded

PROJECT:
REID PARK EXPANSION
801 NORTH ORANGE ST.
RIVERSIDE, CA

REVISIONS	DATE	BY
1	07.12.05	B.M.

LICENSED ARCHITECT — KROHI BROESKE, MICHAEL — No. C012790 Ren. 7.31.2005 — STATE OF CALIFORNIA

SHEET TITLE

DESIGNED	
DRAWN	A. Torres, B. Mantel, M. Mikhail
CHECKED	B. GRIDLEY
DATE	7.22.04
SCALE	
JOB NO.	03032

SHEET
OF SHEETS

PARK & RECREATION PLANNING & DESIGN

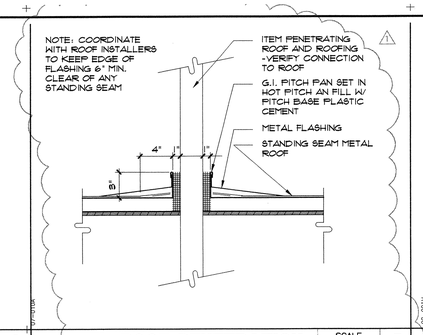

ROOF PENETRATION SCALE 1 1/2" = 1'-0" 5

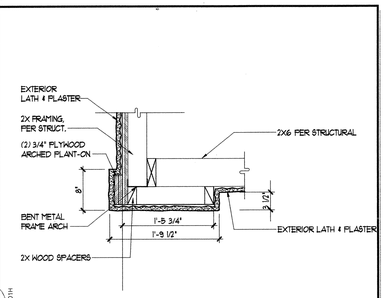

SOFFIT @ ARCH SCALE 1" = 1'-0" 1

17 13 9

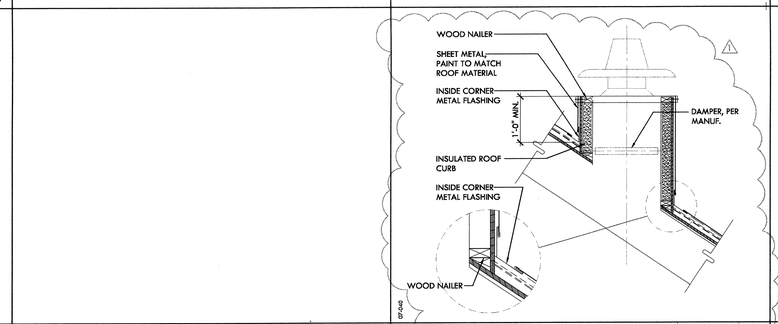

ROOF VENT CURB SCALE 3/4"=1'-0" 10

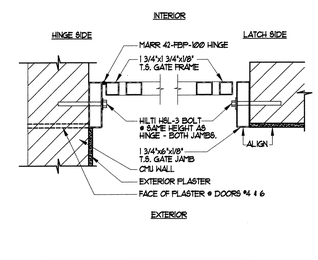

GATE SECTION SCALE 1 1/2"=1'-0" 6

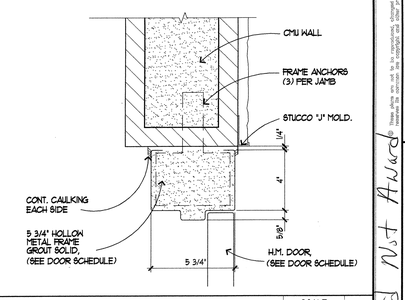

EXTERIOR H.M. JAMB SCALE 3" = 1'-0" 2

18 14

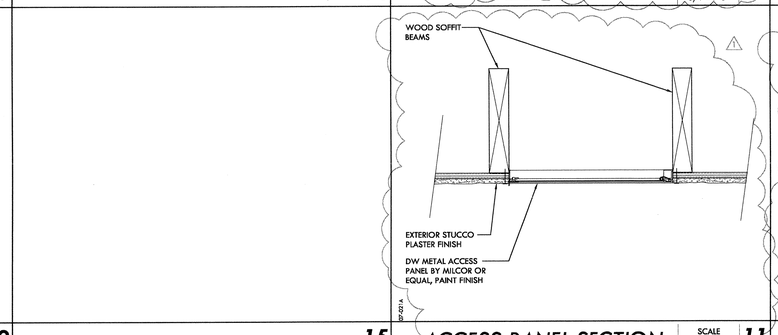

ACCESS PANEL SECTION SCALE 1 1/2"=1'-0" 11

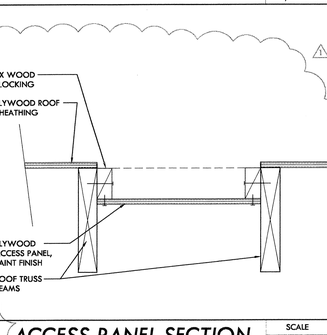

ACCESS PANEL SECTION SCALE 1 1/2"=1'-0" 7

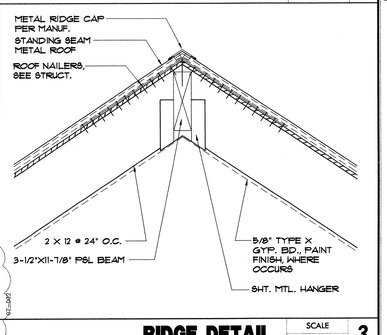

RIDGE DETAIL SCALE 1" = 1'-0" 3

19 15

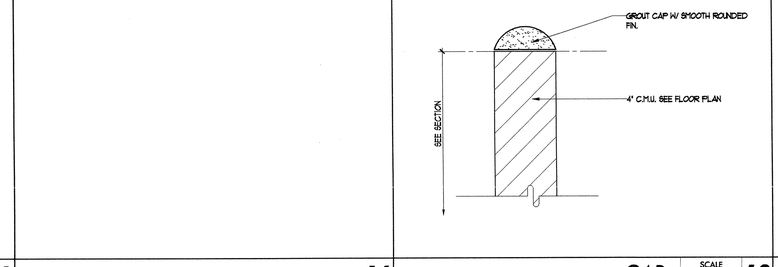

CAP SCALE 3"=1'-0" 12

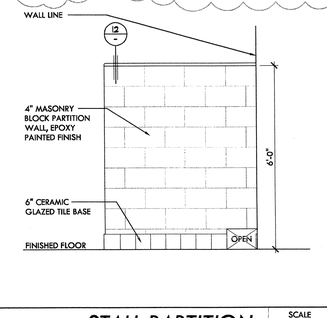

STALL PARTITION SCALE 1/2"=1'-0" 8

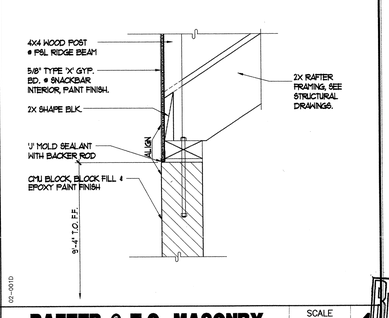

RAFTER @ T.O. MASONRY SCALE 1" = 1'-0" 4

20 16

BID SET 02-06-06

KROHI BROESKE ARCHITECTS
9180 BROCKTON AVE, SUITE 202
RIVERSIDE, CA. 92503-2228
TEL 951-788-5940
FAX 951-788-1365
E-MAIL: KBA@KROHI-BROESKE.COM

These drawings are not to be copyrighted, changed or copied in any form or manner whatsoever nor are they to be loaned, assigned to any other firm or person without the written permission of Krohi Broeske Architects, Inc. owners.

CLIENT:
CITY OF RIVERSIDE
PARK AND RECREATION DEPARTMENT
3900 MAIN STREET
RIVERSIDE, CA 92501

PROJECT:
REID PARK EXPANSION
801 NORTH ORANGE ST.
RIVERSIDE,CA

REVISIONS	DATE	BY
1	07.12.05	B.M.

LICENSED ARCHITECT STEVEN MICHAEL BROESKE No. C012790 Ren. 7.31.2005 STATE OF CALIFORNIA

SHEET TITLE

DESIGNED	
DRAWN	A. Torres, B. Mantel, M. Mikhail
CHECKED	B. GRIDLEY
DATE	7.22.04
SCALE	
JOB NO.	03032

SHEET 4 OF 12 SHEETS

RECEIVED APR 18 2006 PARK & RECREATION PLANNING & DESIGN

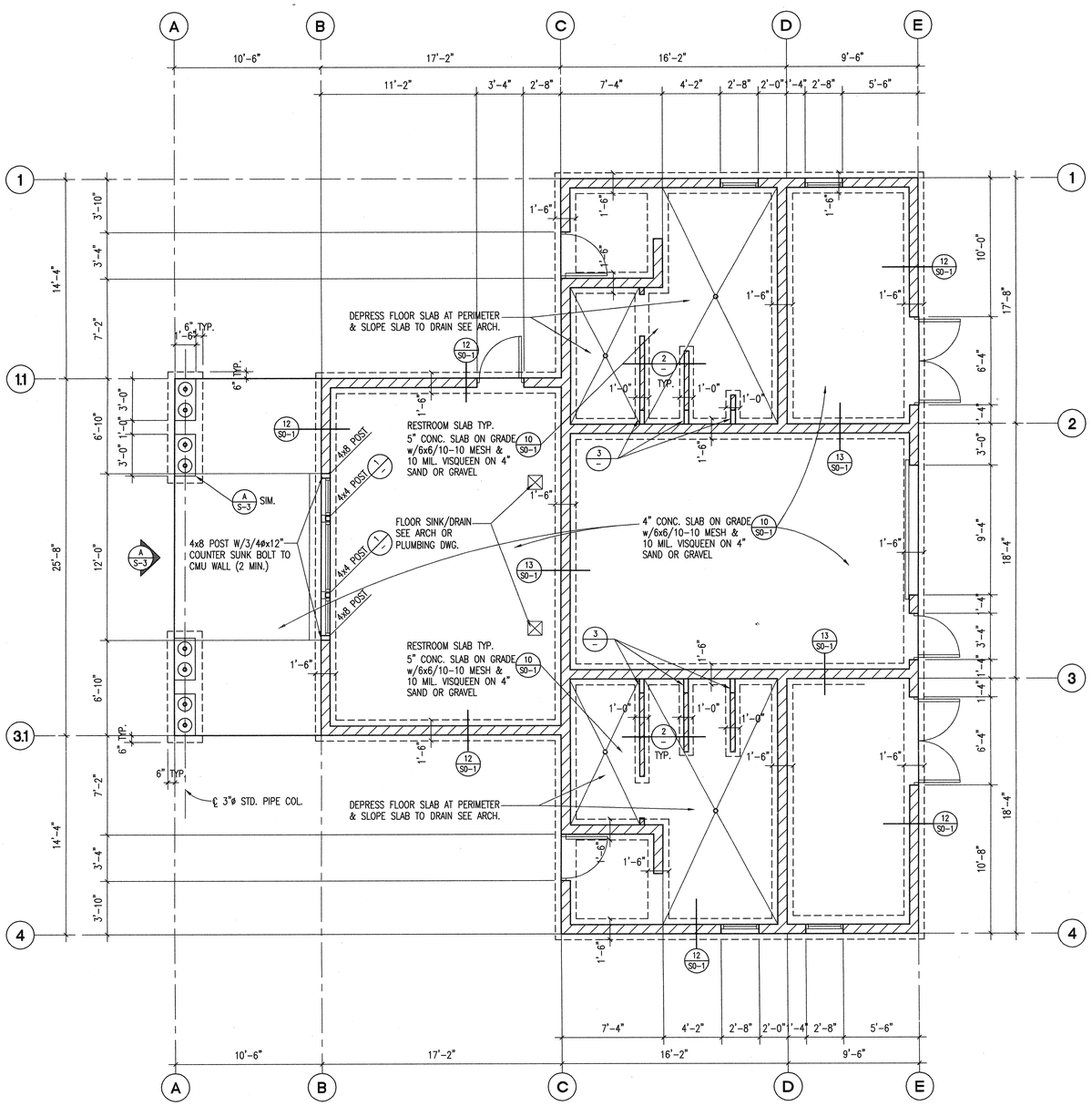

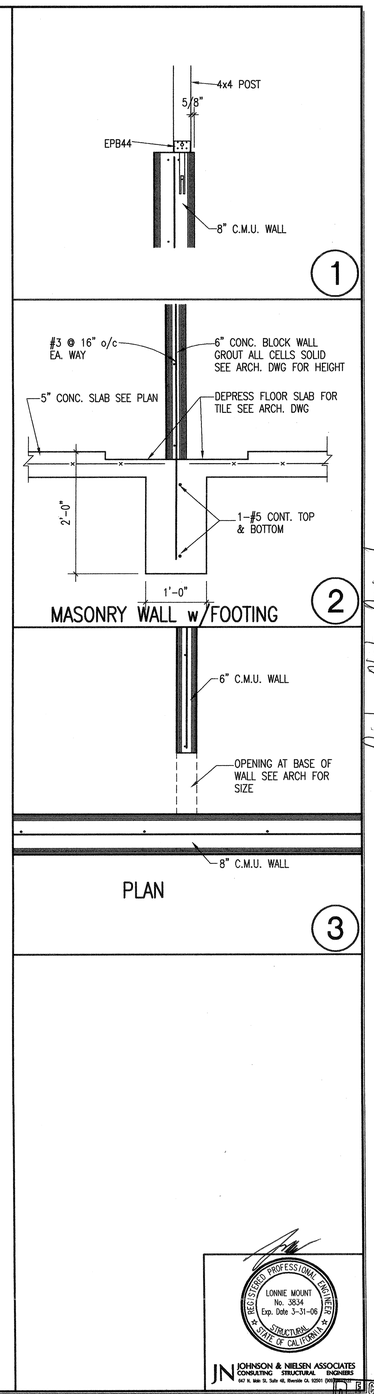

KROH/BROESKE ARCHITECTS
8180 BROCKTON AVE, SUITE 202
RIVERSIDE, CA. 92506-2228
TEL 909-788-5940
FAX 909-788-1365
E-MAIL: KBA@KROHBROESKE.COM

© These plans are not to be reproduced, changed or copied in any form or manner whatsoever nor are they to be assigned to any third party without first obtaining the written permission and consent of Kroh/Broeske Architects, Inc., expressly for the project for which they were prepared and delivered.

CLIENT:
CITY OF RIVERSIDE
PARK AND RECREATION DEPARTMENT
3900 MAIN STREET
RIVERSIDE, CA 92501

Did Not Award

PROJECT:
REID PARK EXPANSION
RIVERSIDE,CA

REVISIONS	DATE	BY
1 PLAN CHECK CORRECTION	7/12/05	C.E.L.

SHEET TITLE
FOUNDATION PLAN

DESIGNED	
DRAWN	
CHECKED	
DATE	7-22-04
SCALE	1/4"=1'-0"
JOB NO.	03032

SHEET
S-1
OF SHEETS

REGISTERED PROFESSIONAL ENGINEER
LONNIE MOUNT
No. 3834
Exp. Date 3-31-06
STRUCTURAL
STATE OF CALIFORNIA

JN JOHNSON & NIELSEN ASSOCIATES
CONSULTING STRUCTURAL ENGINEERS
3637 N. Main St. Suite 40, Riverside Ca. 92501 (909)

RECEIVED
APR 18 2006
PARK & RECREATION PLANNING & DESIGN

BID SET 02-06-06

28-229

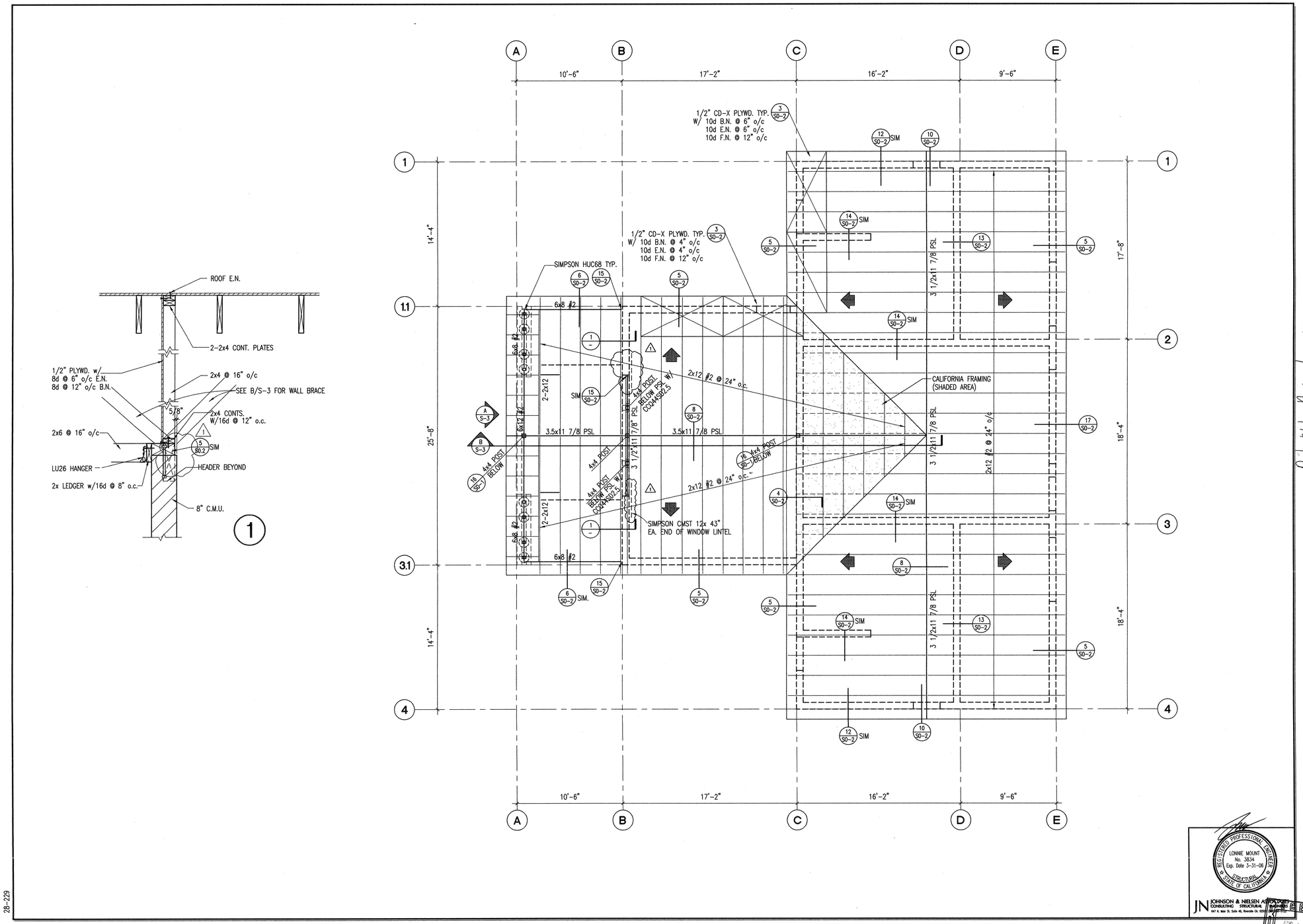

KROH/BROESKE ARCHITECTS
6160 BROCKTON AVE. SUITE 202
RIVERSIDE, CA. 92506-2228
TEL 909-788-5940
FAX 909-788-1365
E-MAIL: KBA@KROHBROESKE.COM

© These plans are not to be reproduced, changed or copied in any form or manner whatsoever nor are they to be in A.I.A. Landscape architects—Planners, Inc. expressly reserved to common law copyright and other property rights in these plans, assigned to any third party without first obtaining the express written permission.

CLIENT:
CITY OF RIVERSIDE
PARK AND RECREATION DEPARTMENT
3900 MAIN STREET
RIVERSIDE, CA 92501

PROJECT:
REID PARK EXPANSION
RIVERSIDE,CA

Did not Award

REVISIONS	DATE	BY
1 PLAN CHECK CORRECTION	7/12/05	C.E.L.

SHEET TITLE
ROOF FRAMING PLAN

DESIGNED	
DRAWN	
CHECKED	
DATE	7-22-04
SCALE	1/4"=1'-0"
JOB NO.	03032

SHEET S-2 OF SHEETS

JOHNSON & NIELSEN ASSOCIATES
CONSULTING STRUCTURAL ENGINEERS
LONNIE MOUNT No. 3834 Exp. Date 3-31-06 STRUCTURAL STATE OF CALIFORNIA

RECEIVED APR 18 2006 PARK & RECREATION PLANNING & DESIGN

28-229

BID SET 02-06-06

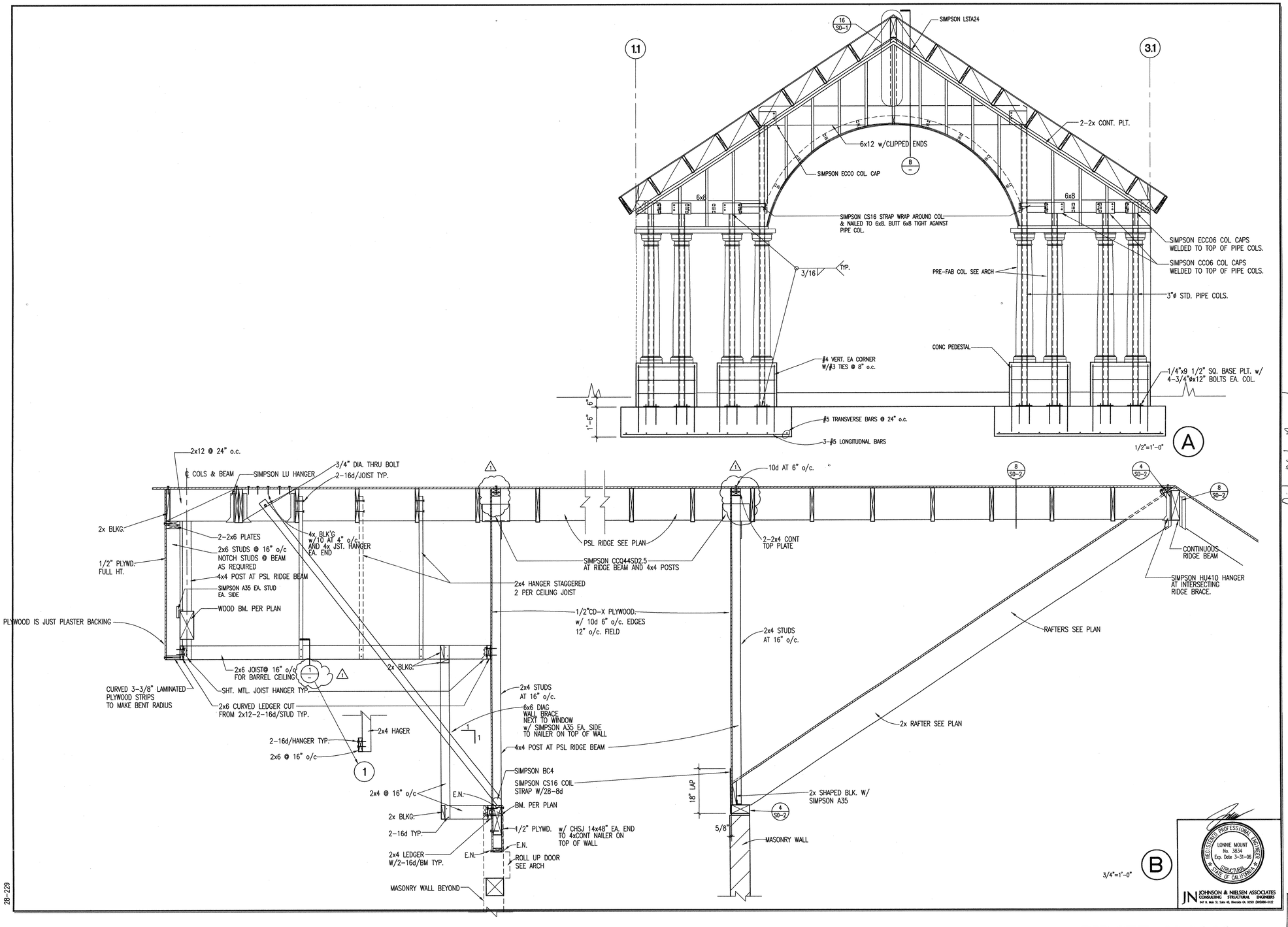

28-229

KROH/BROESKE ARCHITECTS
6160 BROCKTON AVE, SUITE 202
RIVERSIDE, CA. 92506-2228
TEL 909-788-5940
FAX 909-788-1365
E-MAIL: KBA@KROHBROESKE.COM

CLIENT:
CITY OF RIVERSIDE
PARK AND RECREATION DEPARTMENT
3900 MAIN STREET
RIVERSIDE, CA 92501

PROJECT:
REID PARK EXPANSION
RIVERSIDE,CA

Did Not Award

REVISIONS	DATE	BY
1 PLAN CHECK CORRECTION	7/12/05	C.E.L.

SHEET TITLE
ELEVATIONS + SECTIONS

DESIGNED	
DRAWN	
CHECKED	
DATE	7-22-04
SCALE	AS NOTED
JOB NO.	03032

SHEET
S-3

REGISTERED PROFESSIONAL ENGINEER
LONNIE MOUNT
No. 3834
Exp. Date 3-31-06
STRUCTURAL
STATE OF CALIFORNIA

JN JOHNSON & NIELSEN ASSOCIATES
CONSULTING STRUCTURAL ENGINEERS

RECEIVED
APR 18 2006
PARK & RECREATION PLANNING & DESIGN

BID SET 02-06-06

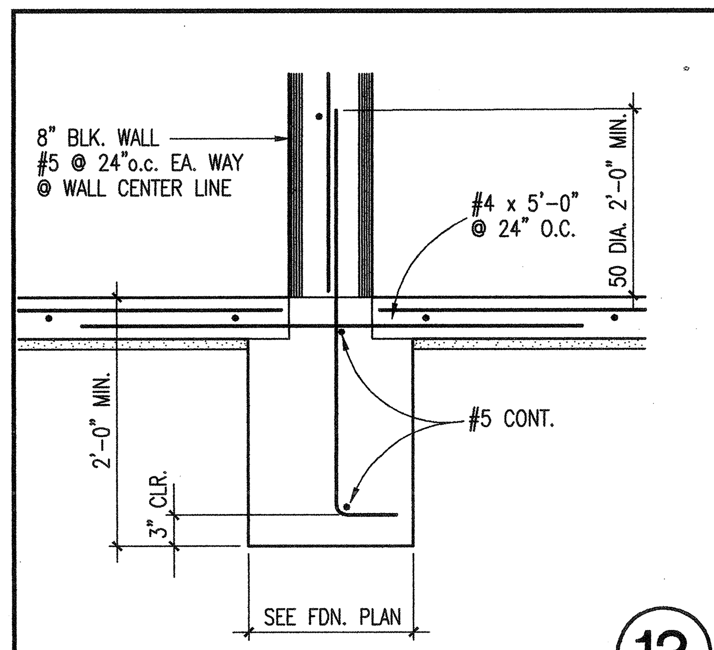

TYPICAL BLOCK WALL DETAIL 1"=1'-0" (13)

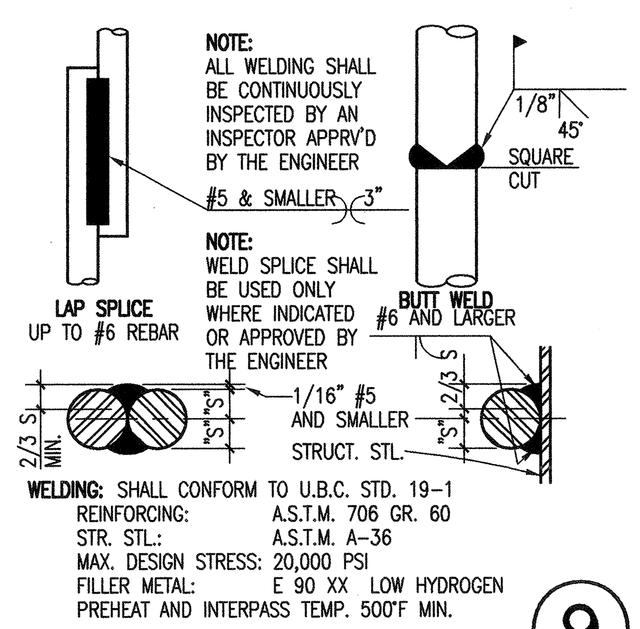

TYP. WELDED REINF. SPLICE N.T.S. (9)

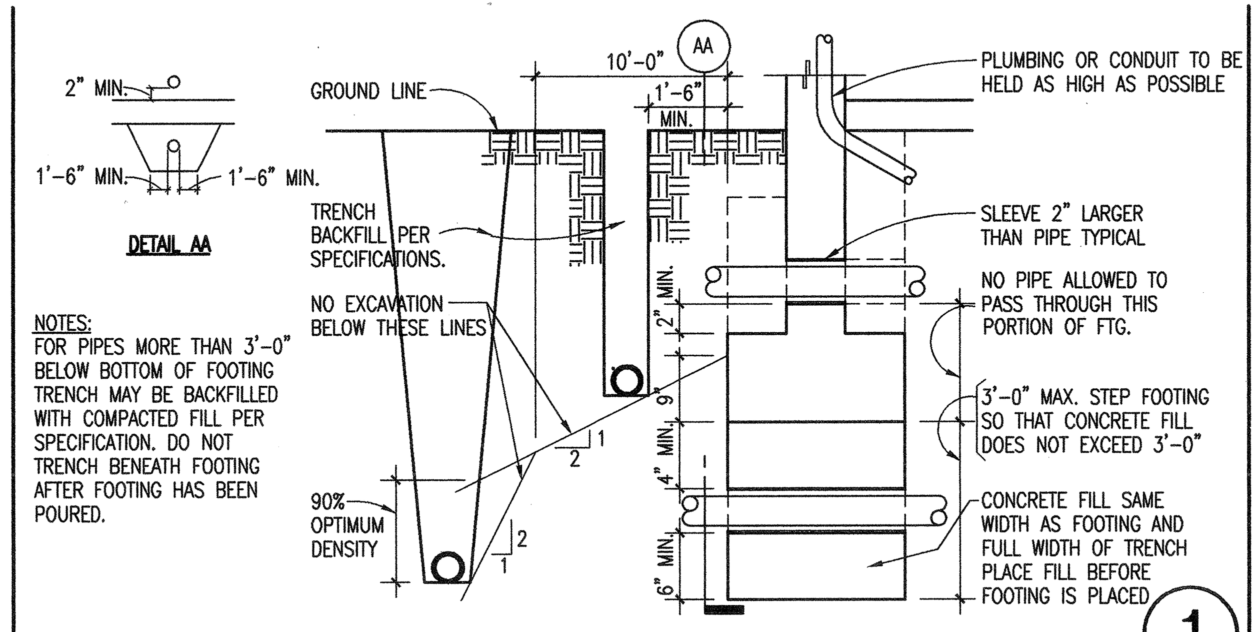

TYPICAL PIPE AND TRENCH DETAIL N.T.S. (1)

(14)

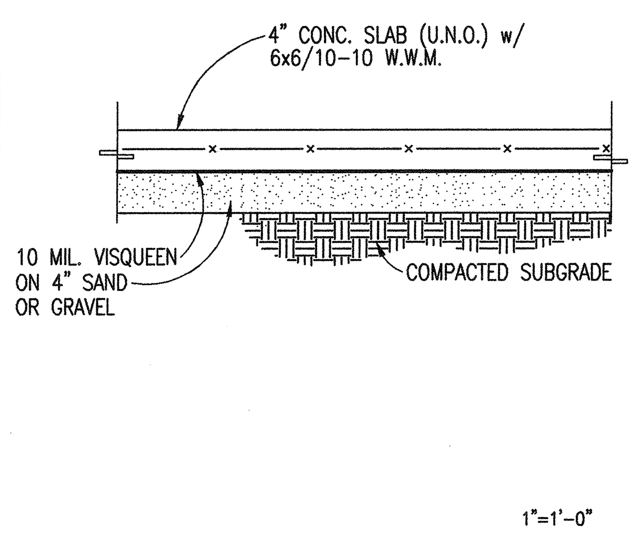

TYPICAL SLAB ON GRADE (10)

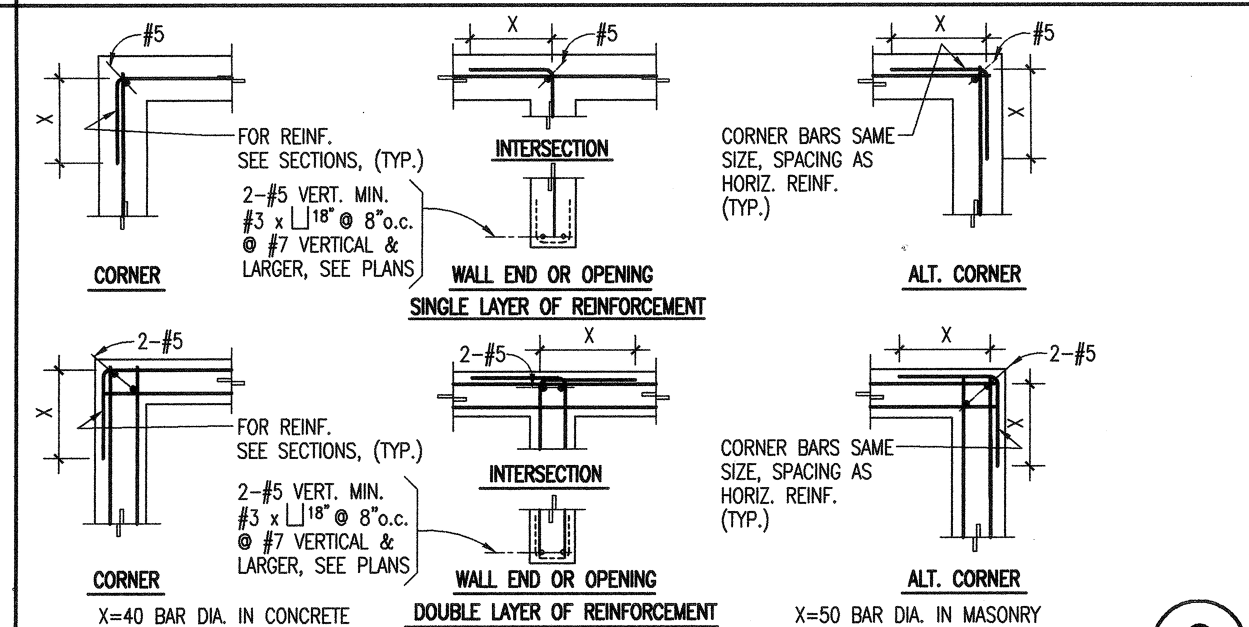

TYPICAL REINFORCING DETAIL (WALLS, BEAMS, FDN's ETC.) N.T.S. (2)

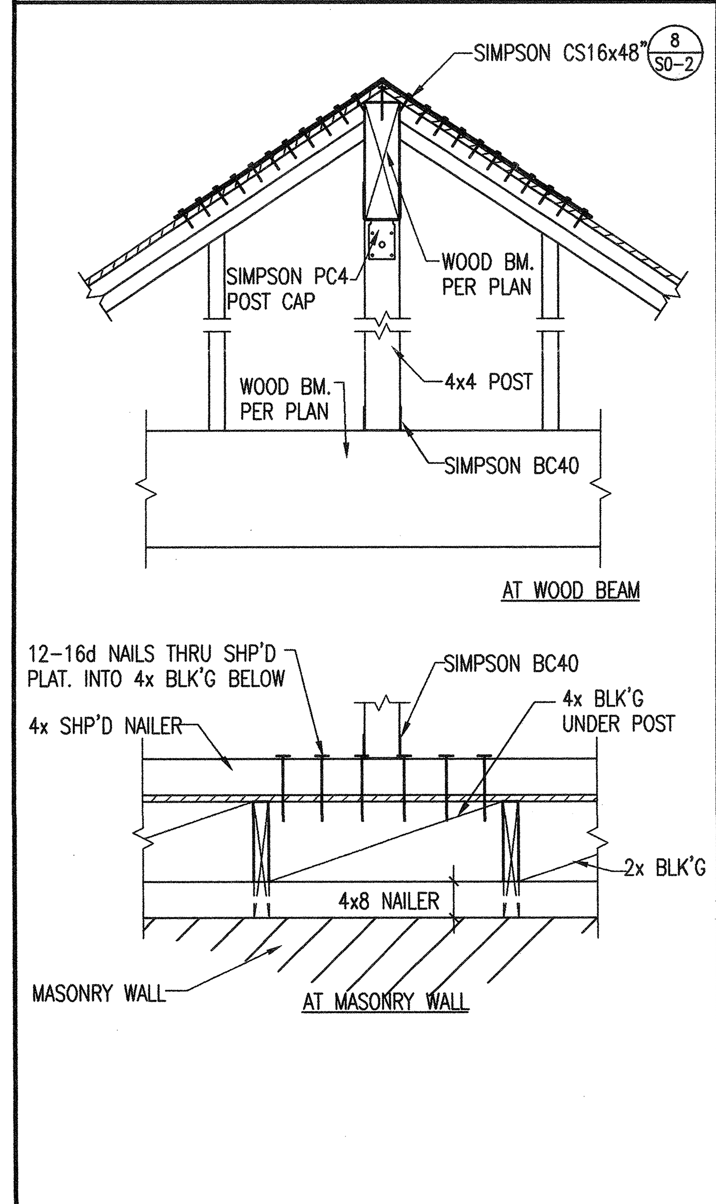

WALL FRAMING AT HIP BEAM 1"=1'-0" (16)

28-229

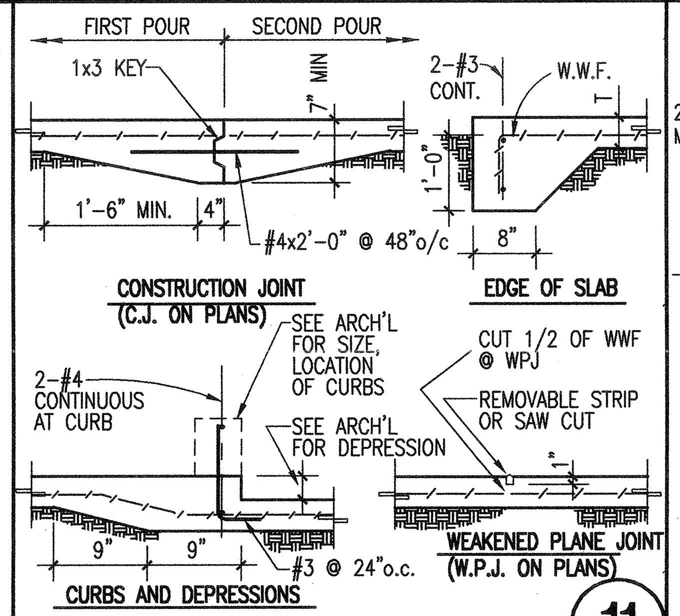

TYPICAL SLAB ON GRADE DETAILS N.T.S. (11)

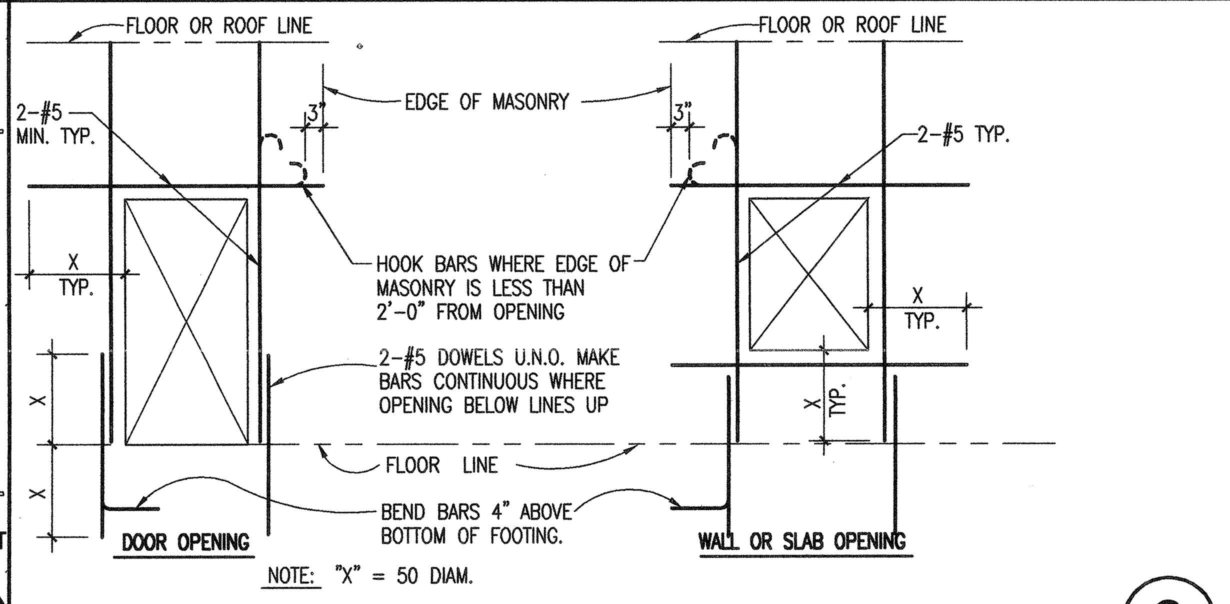

TYP. MASONRY OPENING REINFORCEMENT DETAIL N.T.S. (3)

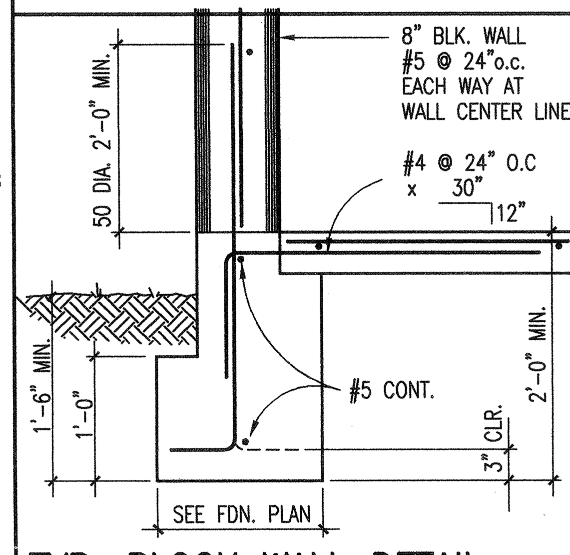

TYP. BLOCK WALL DETAIL 1"=1'-0" (12)

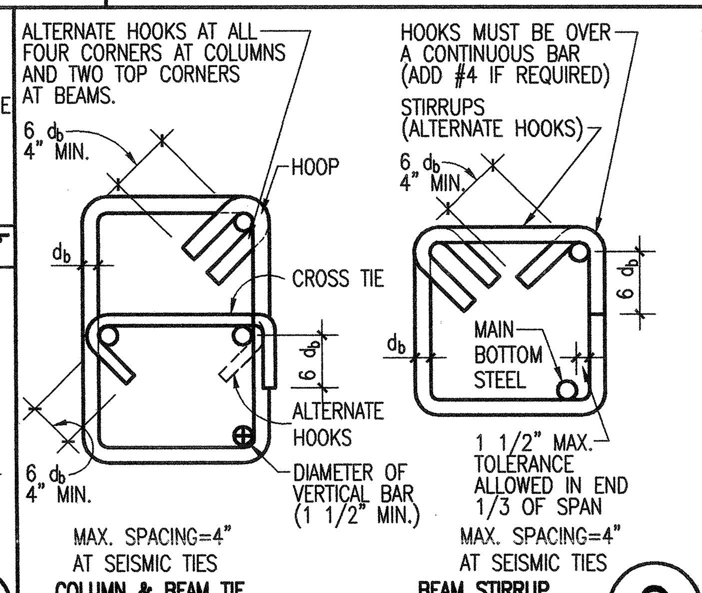

TYP. BM. STIRRUPS/COL. TIE DET. N.T.S. (8)

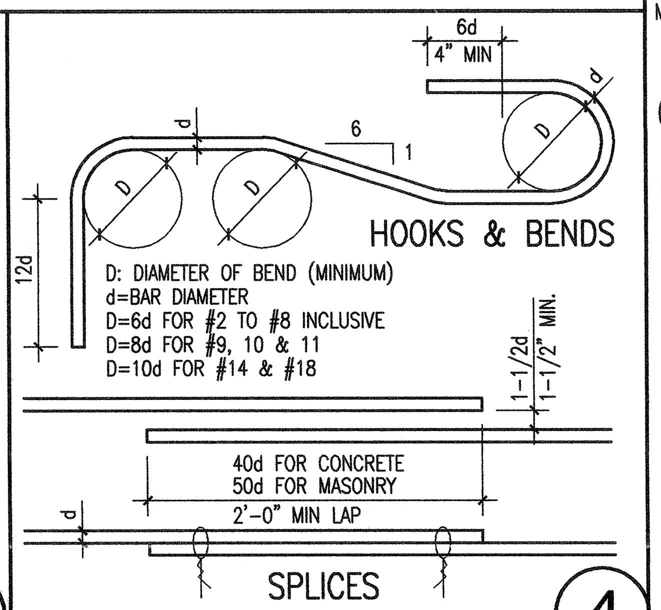

TYP. REINF. BAR DETAILS N.T.S. (4)

STRUCTURAL STEEL:

1. STEEL SHALL CONFORM TO THE FOLLOWING REQUIREMENTS OF:
   STRUCTURAL SHAPES, PLATES-----A.S.T.M. A-36
   PIPE COLUMNS---------------A.S.T.M. A-53 GRADE "B"
   STEEL TUBE-----------------A.S.T.M. A-500 GRADE "B"
   STEEL DECK-----------------A.S.T.M. A-446 GRADE "A"
   BOLTS----------------------A.S.T.M. A-307
   HIGH STRENGTH BOLTS---------A.S.T.M. A-325 (TYPE N)
   (BEARING TYPE CONN. WITH THREADS INCLUDED IN THE SHEAR PLANE.)
2. ALL FABRICATION AND ERECTION SHALL CONFORM TO THE LATEST EDITION OF A.I.S.C.
3. NO STRUCTURAL STEEL SHALL BE FABRICATED OR ERECTED UNTIL SHOP DRAWINGS HAVE BEEN REVIEWED BY THE STRUCTURAL ENGINEER.
4. WELDING SHALL BE PERFORMED BY A CERTIFIED WELDER (S).
5. ALL SHOP WELDING SHALL BE DONE IN THE SHOP OF AN APPROVED FABRICATOR.
6. NO FIELD CUTTING OR BURNING OF STRUCTURAL STEEL WILL BE PERMITTED WITHOUT WRITTEN APPROVAL OF THE STRUCTURAL ENGINEER.
7. BOLTS WITH "UPSET" OR "ROLLED" THREADS ARE NOT ALLOWED. BOLT DIAMETERS INDICATED ARE SHANK DIAMETERS
8. SEE SPEC'S FOR PRIMER PAINTING OF STRUCTURAL STEEL NO PRIMER SHOULD BE PAINTED ON STEEL SURFACES TO BE BURIED IN CONCRETE OR TO RECIEVE METAL DECKING WITH ATTACHMENTS

LEGEND

ø	DIAMETER	MATL.	MATERIAL
℄	CENTER LINE	MAX.	MAXIMUM
PL.	PLATE (STEEL)	M.B.	MACHINE BOLT
A.B.	ANCHOR BOLT	MECH.	MECHANICAL
BLK.	BLOCK	MIN.	MINIMUM
BLKG.	BLOCKING	(N)	NEW
BM.	BEAM	N.G.	NATURAL GRADE
B.N.	BOUNDARY NAILING	N.T.S.	NOT TO SCALE
BOTT.	BOTTOM	O.C.	O/C ON CENTER
C.B.	CARRIAGE BOLT	OPNG.	OPENING
CLR.	CLEAR	PERP.	PERPENDICULAR
C.J.	COLD JOINT (CONST. JOINT)	P.J.	POUR JOINT
C.J.P.	COMPLETE JOINT PENETRATION	P.J.P.	PARTIAL JOINT PENETRATION
		PLT.	PLATE (WOOD)
COL.	COLUMN	PLYWD.	PLYWOOD
CONC.	CONCRETE	P.T.	PRESSURE TREATED
CONN.	CONNECTION	REINF.	REINFORCING
CONST.	CONSTRUCTION	REM.	REMAINDER
CONT.	CONTINUOUS	REQD.	REQUIRED
C.P.E.	CONT. PANEL EDGES	RF.	ROOF.
DBL.	DOUBLE	S.A.	STUD ANCHOR
DIA.	DIAMETER	SCHED.	SCHEDULE
DO.	DITTO	SHPD.	SHAPED
DWG.	DRAWING	SHT.	SHEET
EA.	EACH	SHTG.	SHEATHING
ELEV.	ELEVATION	SIM.	SIMILAR
(E)	EXISTING	S.M.	SHEET METAL
E.J.	EXPANSION JOINT	SQ.	SQUARE
E.N.	EDGE NAILING	STAGG.	STAGGER
EQ.	EQUAL	STD.	STANDARD
EXT.	EXTERIOR	STIFF.	STIFFNER
F.G.	FINISH GRADE	STL.	STEEL
FLR.	FLOOR	THK.	THICK
F.N.	FIELD NAILING	T.O.C.	TOP OF CONCRETE
F.O.C.	FACE OF CONCRETE	T.O.M.	TOP OF MASONRY
F.O.M.	FACE OF MASONRY	T.O.P.	TOP OF PLYWOOD
F.O.S.	FACE OF STUD	T.O.S.	TOP OF STEEL
FRMG.	FRAMING	T.O.W.	TOP OF WALL
FDN.	FOUNDATION	T.P.	TOP OF PARAPET
FTG.	FOOTING	T.S.	TUBE STEEL
GALV.	GALVANIZED	TYP.	TYPICAL
GA.	GAUGE	U.N.O.	UNLESS NOTED OTHERWISE
G.L.B.	GLUE LAMINATED BEAM		
GYP. BD.	GYPSUM BOARD	VERT.	VERTICAL
HORIZ.	HORIZONTAL	W/	WITH
H.S.B.	HIGH STRENGTH BOLT	WD.	WOOD
HT.	HEIGHT	W.P.J.	WEAKENED PLANE JOINT
JST.	JOIST		
LT.WT.	LIGHTWEIGHT	W.W.F.	WELDED WIRE FABRIC
MAS.	MASONRY		

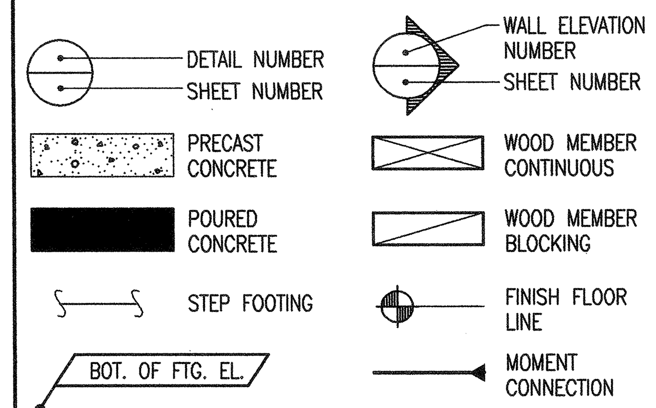

GENERAL NOTES

GENERAL:

1. FRAMING CONDITIONS NOT SPECIFICALLY SHOWN SHALL BE FRAMED SIMILAR TO DETAILS SHOWN FOR THE RESPECTIVE MATERIALS.
2. ALL CONSTRUCTION SHALL CONFORM TO THE 1997 UNIFORM BUILDING CODE AND ALL APPLICABLE LOCAL ORDINANCES
3. CONTRACTOR SHALL VERIFY ALL DIMENSIONS BEFORE STARTING WORK THE ARCHITECT SHALL BE NOTIFIED OF ANY DISCREPANCIES.
4. NOTWITHSTANDING ANY REFERENCE IN THE CONSTRUCTION DOCUMENTS TO ANY RULE OR REGULATION, THE STRUCTURAL ENGINEER IS NOT ASSUMING ANY DUTY TO PROVIDE SUPERVISION OF CONSTRUCTION METHODS OR PROCESSES.

INSPECTION:

1. CONTINUOUS INSPECTION BY A REGISTERED DEPUTY BUILDING INSPECTOR EMPLOYED BY THE TESTING LABORATORY SHALL BE PROVIDED FOR ALL CONCRETE OVER 2500 PSI (EXCEPT SLAB ON GRADE.)
2. ALL WELDS SHALL BE INSPECTED. PROVIDE CONT. INSPECTION FOR FULL PENETRATION WELDS AND WELDING OF REINFORCING. THE INSPECTOR SHALL BE AN APPROVED LAB INSPECTOR. FULL PENETRATION WELDS SHALL BE SUBJECTED TO ULTRASONIC INSPECTION.
3. THE SOILS ENGINEER SHALL INSPECT THE PREPARING AND PLACING OF ALL FILL BELOW BUILDINGS AND PAVING.

FOUNDATIONS:

1. ALL FILL SHALL BE COMPACTED TO A MINIMUM OF 90% IN ACCORDANCE WITH THE PROCEDURE OUTLINED IN THE SPECIFICATIONS
2. MAXIMUM SOIL PRESSURE: 1000 PSF
3. TYPE OF SOIL: SILTY SAND
4. FOOTINGS SHALL BE CARRIED A MINIMUM OF 18" BELOW FINISH GRADE.
5. ALL EXCAVATIONS SHALL BE INSPECTED AND APPROVED BY THE SOILS ENGINEER PRIOR TO FORMING AND PLACING REINFORCING STEEL.
6. ALL FOOTINGS & SLABS SHALL BEAR ON A COMPACTED FILL MATERIAL SEE SOIL REPORT & SPECIFICATIONS.

REINFORCING:

1. TYPICAL REINFORCING----A.S.T.M. A-615--------GRADE 60
   STIRRUPS, TIES, SLABS ON GRADE AND
   NON-STRUCT ITEMS-----A.S.T.M. A-615--------GRADE 40
   REINFORCING TO BE WELDED SHALL BE A.S.T.M. A-706 GR. 60
2. REINFORCING FABRIC------------------ A.S.T.M. A-185
3. LAP ALL BARS A MINIMUM OF 40-BAR DIAMETERS IN CONCRETE AND 50 BAR DIAMETERS IN MASONRY. (2'-0" MINIMUM) U.N.O.
4. SPLICES OF ALL HORIZONTAL REINFORCING SHALL BE STAGGERED.
5. COLUMN AND WALL DOWELS SHALL BE SAME SIZE AND SPACING AS COLUMN OR WALL REINFORCING.
6. MINIMUM CONCRETE COVERAGE:
   THE FOLLOWING MINIMUM COVERAGE SHALL BE MAINTAINED UNLESS NOTED OTHERWISE:
   SLABS ON GRADE--------------------CENTER OF SLAB
   CAST AGAINST & EXPOSED TO EARTH-----------------3"
   FORMED, EXPOSED TO EARTH AND WEATHER;
   #6 AND LARGER-----------2"
   #5 AND SMALLER------1 1/2"
   NOT EXPOSED TO EARTH OR WEATHER:
   SLABS, WALLS, JOISTS---#14 & #18----------1 1/2"
   #11 AND SMALLER-------3/4"
7. WELDING OF REINFORCING STEEL-----------U.B.C. STD. 19.1 LOW HYDROGEN

CONCRETE:

1. THE 28-DAY STRENGTH AND TYPE OF CONCRETE SHALL BE AS FOLLOWS:
   SLABS ON GRADE------------2500 P.S.I.----150 P.C.F.
   FOOTINGS------------------2500 P.S.I.----150 P.C.F.
2. AGGREGATES: NATURAL SAND AND ROCK------A.S.T.M. C-33
   LIGHTWEIGHT ------A.S.T.M. C-330
3. CEMENT: PORTLAND CEMENT, TYPE I OR II,
   LOW ALKALI-----------A.S.T.M. C-150
4. NO PIPE OR DUCTS SHALL BE PLACED IN CONCRETE UNLESS SPECIFICALLY DETAILED.
5. REINF., DOWELS, ANCHOR BOLTS, INSERTS, ETC., SHALL BE SECURELY TIED IN PLACE PRIOR TO POURING OF CONCRETE OR GROUT.

MASONRY:

1. ALL MASONRY WORK SHALL CONFORM TO THE U.B.C.
2. NO PIPES OR DUCTS SHALL BE PLACED IN MASONRY WALLS UNLESS SPECIFICALLY NOTED OR DETAILED.
3. ALL REINFORCING SHALL BE LAP SPLICED 50 BAR DIA. MINIMUM.
4. ALL REINFORCING SHALL HAVE A MINIMUM 1/2" GROUT COVERAGE.
5. MORTAR: TYPE "S" CONFORMING TO TABLE 21-A, U.B.C. - 1500 P.S.I.
6. GROUT: 1-CEMENT, 3-SAND, 2-GRAVEL - 2000 P.S.I.
7. CONCRETE BLOCK: U.B.C. STD. 21-4 GRADE "N"
8. ALL MASONRY SHALL BE REINFORCED AND SOLID GROUTED MASONRY.
9. CORE TESTS COMPRESSION 1500 P.S.I. SHEAR 100 P.S.I.
10. BRICK: U.B.C. STD. 24-1 MW.
11. BOLTS WITH "UPSET OR "ROLLED" THREADS ARE NOT ALLOWED. BOLT DIAMETERS INDICATED ARE SHANK DIAMETERS

REGISTERED PROFESSIONAL ENGINEER
LONNIE MOUNT
No. 3834
Exp. Date 3-31-06
STRUCTURAL
STATE OF CALIFORNIA

JN JOHNSON & NIELSEN ASSOCIATES
CONSULTING STRUCTURAL ENGINEERS
647 N. Main St. Suite 4B, Riverside CA. 92501

RECEIVED
APR 18 2006
PARK & RECREATION PLANNING & DESIGN

Did Not Award

KROH/BROESKE ARCHITECTS
6180 BROCKTON AVE. SUITE 202
RIVERSIDE, CA. 92506-2228
TEL 909-788-5940
FAX 909-788-1365
E-MAIL: KBA@KROHBROESKE.COM

© These plans are not to be reproduced, changed or copied in any form or manner whatsoever nor are they to be assigned to any third party without first obtaining the express written permission. R H A Landscape Architects -Planners, Inc. expressly reserves its common law copyright and other property rights in these plans.

CLIENT:
CITY OF RIVERSIDE
PARK AND RECREATON DEPARTMENT
3900 MAIN STREET
RIVERSIDE, CA 92501

PROJECT:
REID PARK EXPANSION
RIVERSIDE,CA

REVISIONS	DATE	BY
1 PLAN CHECK CORRECTION	7/12/05	C.E.L

CONSTRUCTION

SHEET TITLE
GENERAL NOTES & TYP. DETAILS

DESIGNED	
DRAWN	
CHECKED	
DATE	7-22-04
SCALE	
JOB NO.	03032

SHEET
S0-1
OF SHEETS

BID SET 02-06-06

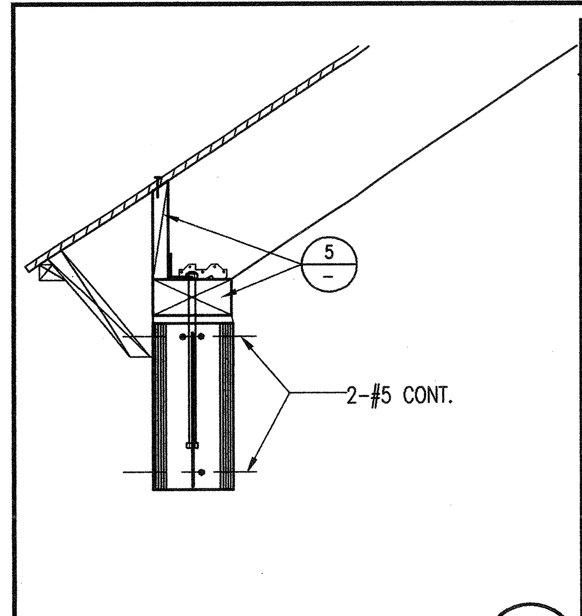

(17)

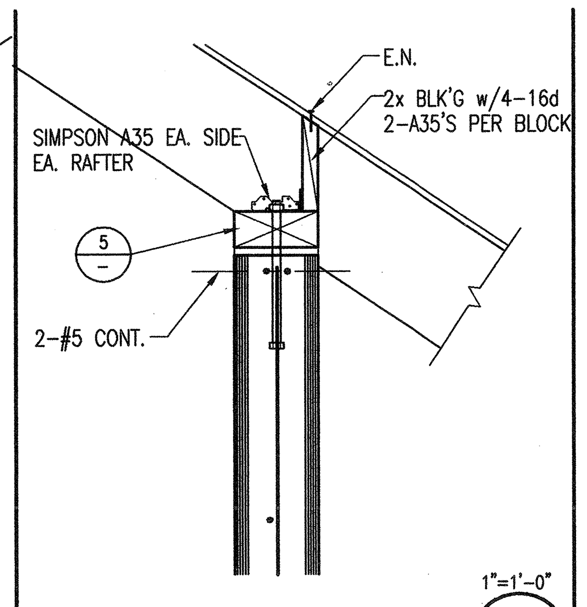

1"=1'-0"

NAILER TO MASONRY WALL CONNECTION AT ROOF (13)

(9)

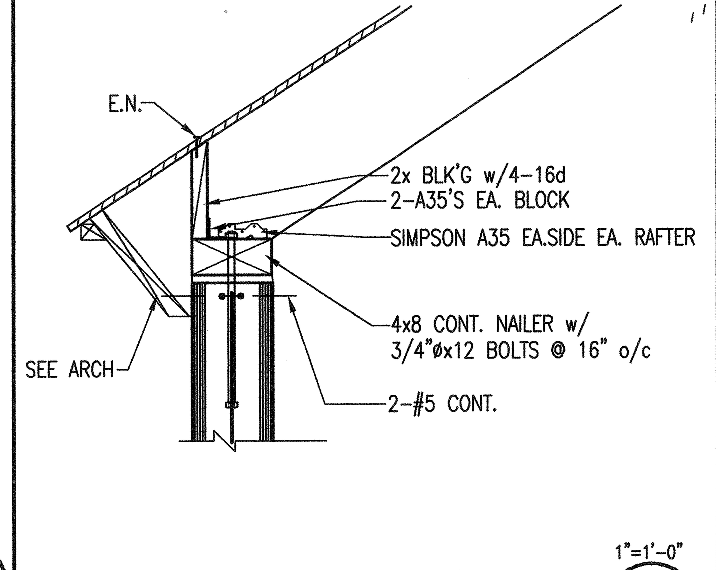

1"=1'-0"

NAILER TO MASONRY WALL CONN. AT ROOF (5)

LINTEL SCHEDULE	
MAX. OPENING WIDTH	LINTEL SIZE
4'-0"	STUD WIDTH x 4" DEPTH
6'-0"	STUD WIDTH x 6" DEPTH
8'-0"	STUD WIDTH x 8" DEPTH
10'-0"	STUD WIDTH x 10" DEPTH
12'-0"	STUD WIDTH x 12" DEPTH

LINTELS IN SCHEDULE TO BE USED FOR ALL OPENINGS UNLESS OTHERWISE SHOWN ON DRAWINGS.

CEILING JOIST SCHEDULE				
SIZE	SPACING	MAX. SPAN PLASTER	MAX. SPAN GYP. BD.	SIMPSON HANGER
2x4	16"o.c.	8'-0"	10'-0"	LU24
2x6	16"o.c.	12'-4"	15'-0"	LU26
2x8	16"o.c.	16'-6"	20'-0"	LU28

NTS

LINTEL & CEILING JOIST SCHEDULE (1)

LUMBER:

1. ALL STRUCTURAL SAWN LUMBER SHALL BE DOUGLAS FIR-LARCH OF THE FOLLOWING GRADES, UNLESS NOTED OTHERWISE:
   2X2, 2X3, 2x4, 3X3 & 3X4 --------- NO 2, Fb = 1300 PSI
   2X6, 3X6, & 4X6 ---------------- NO 1, Fb = 1300 PSI
   2X8, 3X8, & 4X8 ---------------- NO 1, Fb = 1200 PSI
   2X10, 3X10, & 4X10 ------------- NO 1, Fb = 1100 PSI
   2X12, 3X12, & 4X12 ------------- NO 1, Fb = 1000 PSI
   2X14, 3X14, & 4X14 ------------- NO 1, Fb = 900 PSI
   ALL SIZES OF 6X ------ SELECT STRUCT. Fb = 1500 PSI
   2X & 3X DECKING ------SELECT DEX Fb = 1750 PSI
   SILL PLATES-HEM FIR (WOLMANIZED)-COMMERCIAL, Fb = 1150 PSI
2. ALL STRUCTURAL LUMBER SHALL BE GRADED IN ACCORDANCE WITH GRADING AND DRESSING RULES #17 OF THE WEST COAST INSPECTION BUREAU.
3. ALL WOOD BEARING ON CONCRETE OR MASONRY SHALL BE PRESSURE TREATED HEM-FIR, ALL FIELD CUTS SHALL BE FIELD TREATED BY AWPA METHOD H-84
4. STRUCTURAL MEMBERS SHALL NOT BE CUT FOR PIPES, ETC., UNLESS SPECIFICALLY DETAILED OR NOTED.
5. 2" SOLID BLOCKING SHALL BE PLACED BETWEEN JOISTS OR RAFTERS AT ALL SUPPORTS.
6. CROSS BRIDGING SHALL BE PROVIDED 8'-0" o.c. MAXIMUM FOR ALL ROOF JOISTS OR RAFTERS MORE THAN 8" IN DEPTH. & ALL FLOOR JOISTS MORE THAN 4" IN DEPTH USE 2X3 OR AN APPROVED TYPE OF METAL BRIDGING.
7. PLYWOOD USED ON ROOF & SHEAR WALLS SHALL BE GRADE MARKED STRUCTURAL PS-1-95.
8. NOTCH ALL JOISTS AND RAFTERS, AS REQUIRED, FOR FULL BEARING ON JOIST HANGERS & PLATES, MINIMIZE WOOD REMOVAL AND OVER CUTTING.
9. BOLTS, ASTM A-307, WITH STANDARD CUT WASHERS BETWEEN WOOD, NUTS & BOLT HEADS (USE MALLEABLE IRON WASHERS WHERE BOLTS ARE IN TENSION.)
10. BOLTS WITH "UPSET" OR "ROLLED" THREADS ARE NOT ALLOWED. BOLT DIAMETERS INDICATED ARE SHANK DIAMETERS.
11. HOLES FOR BOLTS SHALL BE BORED 1/32" TO 1/16" LARGER THAN THE NOMINAL BOLT DIAMETER.
12. RETIGHTEN ALL BOLTS JUST PRIOR TO BEING INCLOSED.
13. MACHINE APPLIED NAILING:
    USE OF MACHINE APPLIED NAILING IS SUBJECT TO SATISFACTORY JOB SITE DEMOSTRATION FOR EACH PROJECT AND THE APPROVAL BY THE PROJECT ARCHITECT OR STRUCTURAL ENGINEER AND THE OFFICE OF THE STATE ARCHITECT. THE APPROVAL IS SUBJECT TO CONTINUED SATISFACTORY PERFORMANCE. MACHINE NAILING WILL NOT BE APPROVED IN 5/16" PLYWOOD. IF NAILHEADS PENETRATE THE OUTER PLY MORE THAN WOULD BE NORMAL FOR A HAND HAMMER OR IF MINIMUM ALLOWABLE EDGE DISTANCES ARE NOT MAINTAINED THE PERFORMANCE WILL BE DEEMED UNSATISFACTORY.

NAILING SCHEDULE:
(ALL NAILS SHALL BE COMMON, GALVANIZED WHERE EXPOSED)

1. JOISTS OR RAFTERS TO SIDE OF STUDS 8" JOISTS OR LESS------------------------------3-16d
   FOR EACH ADDITIONAL OF 4" OF DEPTH-----------1-16d
2. BRIDGING TO JOIST, TOENAIL EACH END----------- 2-8d
   A. BLOCKING BETWEEN JOISTS OR RAFTERS - TO JOISTS OR RAFTERS - TOENAILS EACH SIDE, EACH END-------------------------- 2-10d
   B. BLOCKING BETWEEN STUDS, EACH END-------------2-10d TOENAILS OR 2-16d
3. 1"x6" SUBFLOOR OR LESS TO EACH JOIST, FACE NAIL--2-8d
4. WIDER THAN 1"x6" SUBFLOOR TO EACH JOIST, FACE NAIL--------------------------------3-8d
5. 2" SUBFLOOR TO JOIST OR GIRDER, BLIND AND FACE NAIL--------------------------------2-16d
6. SOLE PLATE TO JOIST OR BLOCKING, FACE NAIL---------------------------16d @ 16"o.c.
7. TOP PLATE TO STUD, END NAIL----------------- 2-16d
8. STUD TO SOLE PLATE--------------- 4-8, TOENAIL OR 2-16d, END NAIL
9. DOUBLE STUDS, FACE NAIL-------------- 16d @ 24"o.c.
10. DOUBLED TOP PLATES, FACE NAIL-----------16d @ 16"o.c.
11. TOP PLATES, LAPS AND INTERSECTIONS, FACE NAIL---- 2-16d
12. CONTINUOUS HEADER, TWO PIECES---------- 16d @ 16"o.c. ALONG EACH EDGE
13. CEILING JOISTS TO PLATE, TOENAIL-------------- 3-8d
14. CONTINUOUS HEADER TO STUD, TOENAIL----------- 4-8d
15. CEILING JOISTS, LAPS OVER PARTITIONS, FACE NAIL----3-16d
16. CEILING JOISTS TO PARALLEL RAFTERS, FACE NAIL---- 3-16d
17. JOIST OR RAFTERS AT ALL BEARINGS - TOENAILS, EACH SIDE--------------------------------- 2-10d
18. 1" BRACE TO EACH STUD AND PLATE, FACE NAIL----- 2-8d
19. 1"x8" SHEATHING OR LESS TO EACH BEARING, FACE NAIL--------------------------------2-8d
20. WIDER THAN 1"x8" SHEATHING TO EACH BEARING, FACE NAIL--------------------------------3-8d
21. BUILT UP CORNER STUDS---------------16d @ 24"o.c.

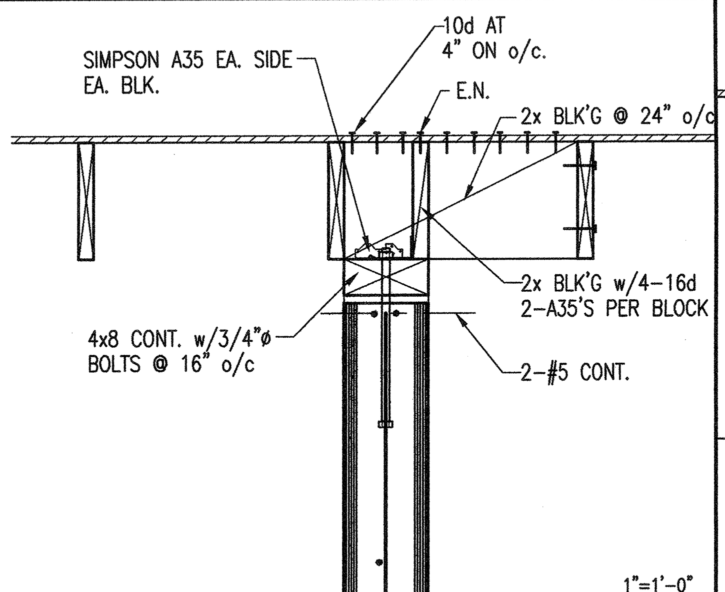

1"=1'-0"

NAILER TO MASONRY WALL CONNECTION AT ROOF (14)

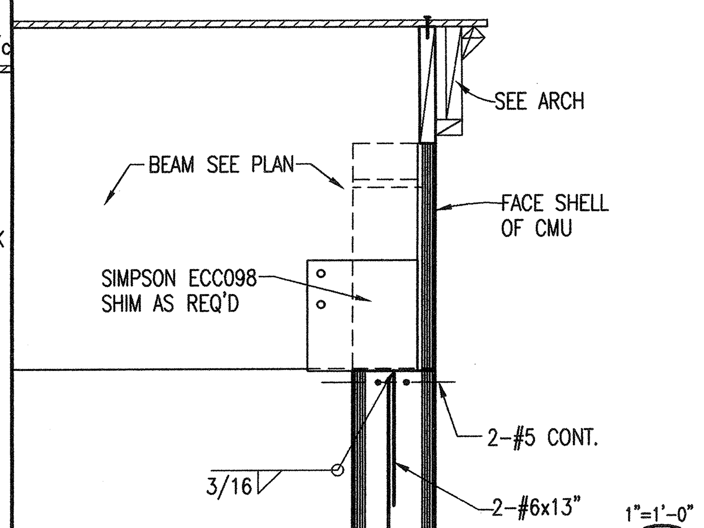

1"=1'-0"

GLU-LAM BM. TO MASONRY CONN. (10)

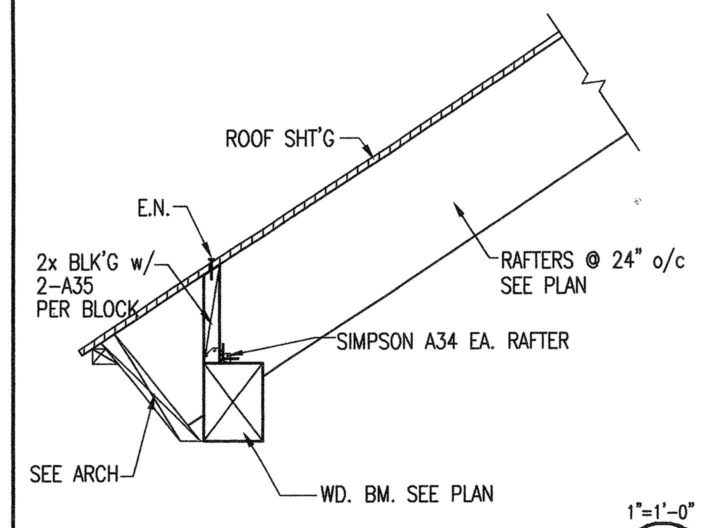

1"=1'-0"

WOOD BEAM AT ROOF CONN. (6)

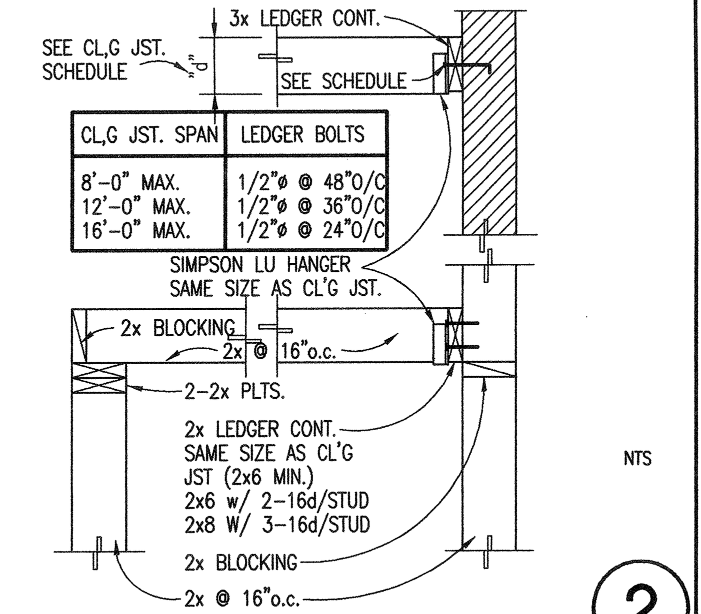

CL,G JST. SPAN	LEDGER BOLTS
8'-0" MAX.	1/2"ø @ 48"O/C
12'-0" MAX.	1/2"ø @ 36"O/C
16'-0" MAX.	1/2"ø @ 24"O/C

NTS

TYP. CEILING JOIST DETAIL (2)

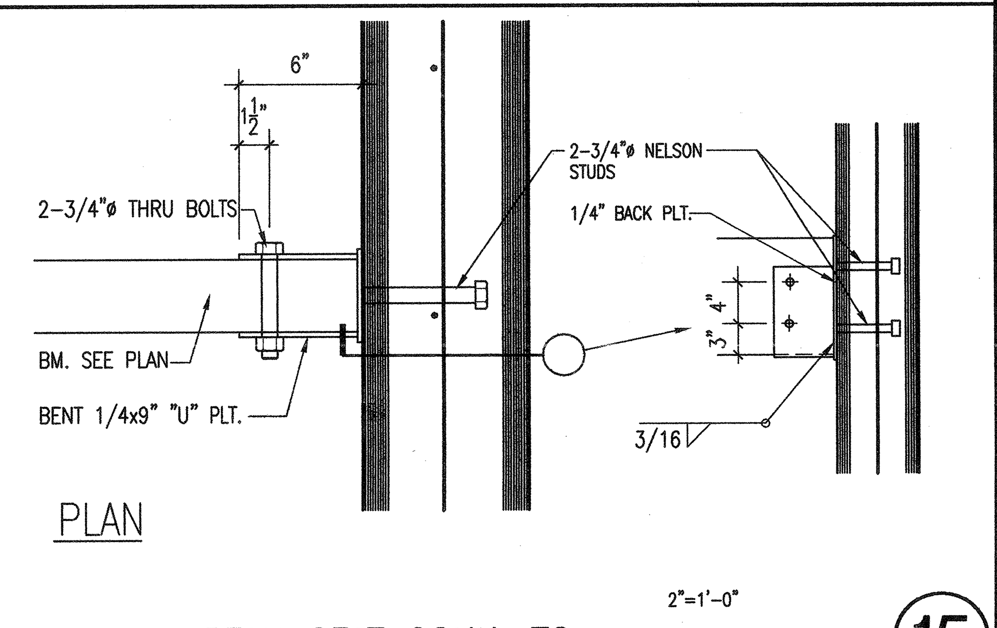

PLAN

2"=1'-0"

BEAM SEAT CONN. TO MASONRY WALL (15)

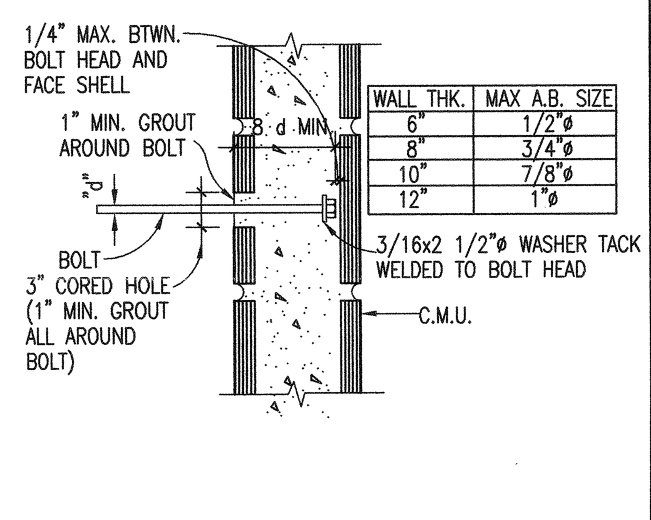

WALL THK.	MAX A.B. SIZE
6"	1/2"ø
8"	3/4"ø
10"	7/8"ø
12"	1"ø

TYP. ANCHOR BOLT DET. NTS (11)

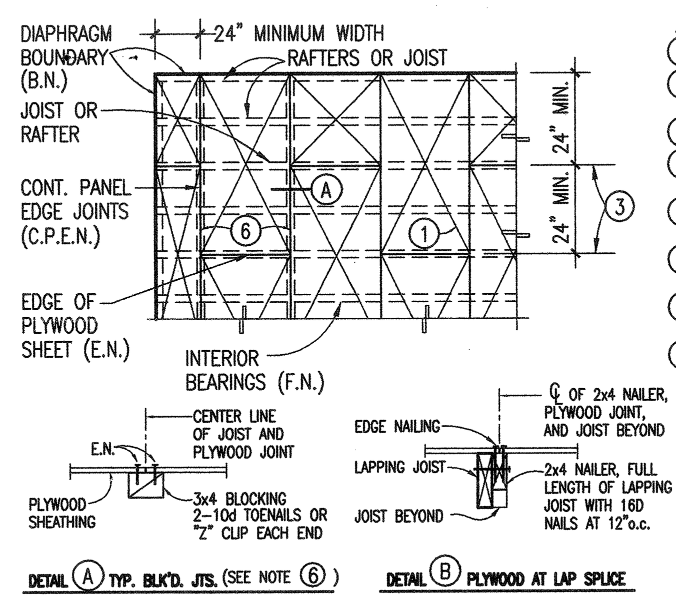

NOTES:

(1) PLYWOOD PS-1-95 STRUCTURAL I U.N.O.
(2) RUN LONG DIMENSION OF PLYWOOD SHEETS ACROSS (PERPENDICULAR TO) JOISTS OR RAFTERS.
(3) STAGGER PLYWOOD END JOINTS 24" MIN.
(4) FRAMING TO BE ON A 4'-0" MODULE TO COINCIDE WITH THE PLYWOOD PATTERN.
(5) FRAMING SHALL BE 3x OR WIDER & NAILS STAGGERED WHERE NAILS ARE SPACED 2", 2-1/2" OR 3" O.C.
(6) BLOCK EDGE JOINTS ONLY WHERE CALLED FOR ON FLOOR OR ROOF PLANS. SEE DETAIL (A) BELOW.
(7) FOR PLYWOOD THICKNESS, GRADE, NAILING AND AND BLOCKING SEE FLOOR OR ROOF FRAMING PLANS.
(8) MINIMUM NAILING: U.N.O. SEE ROOF PLANS
B.N.--10d @ 6" O.C. AT DIAPHRAGM BOUNDARY, CONT. PLATE LINES, CHORDS, TIES AND AS NOTED.
C.P.E.N.--USE B.N. WHERE CONT. PLYWD EDGES ARE BLOCKED.
E.N.--10d @ 6" O.C. AT ALL BEARING ENDS AND EDGES OF EACH PLYWOOD SHEET.
F.N.--10d @ 12" O.C. (ROOF) 10d @ 10" O.C. (FLOOR) AT ALL INTERIOR BEARINGS OF PLYWOOD SHEETS.
(9) NAILS SHALL HAVE A MIN. 3/8" EDGE DISTANCE.

1"=1'-0"

TYPICAL PLYWOOD ROOF SHEATHING (3)

(16)

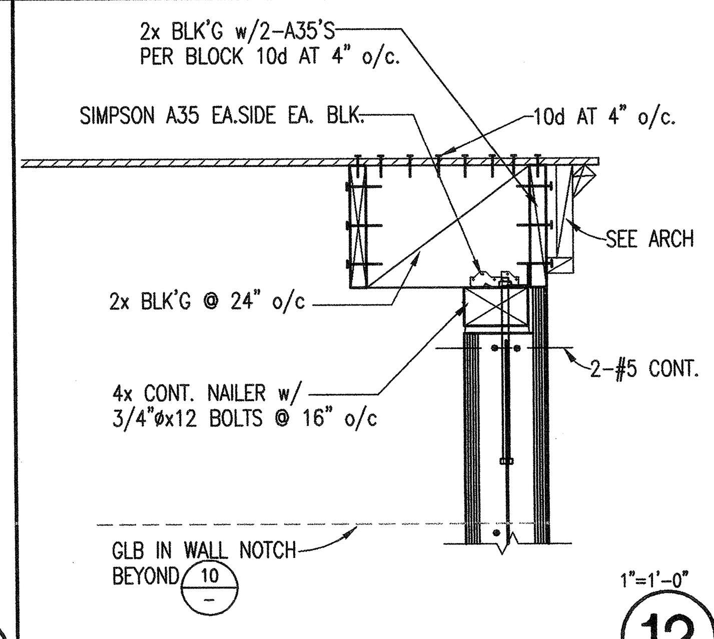

1"=1'-0"

(12)

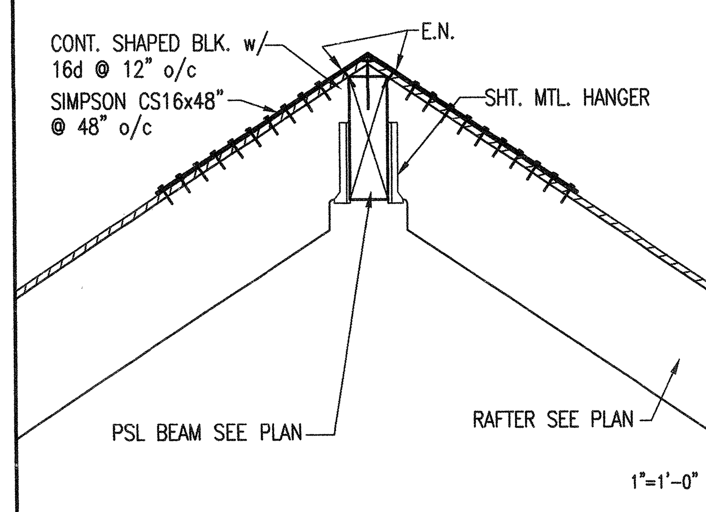

1"=1'-0"

GLB CONNECTION AT HIP ROOF (8)

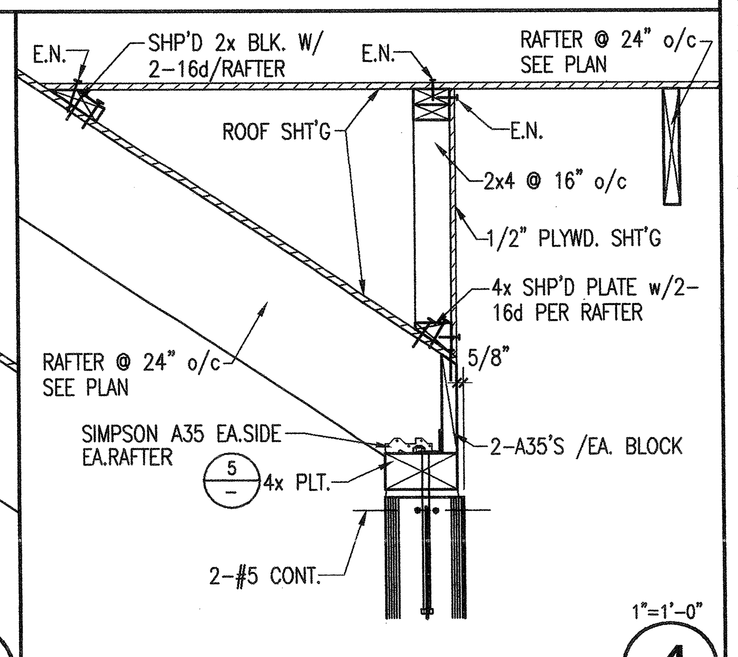

1"=1'-0"

STUD WALL AT CALIF. FRAMING (4)

REGISTERED PROFESSIONAL ENGINEER
LONNIE MOUNT
No. 3834
Exp. Date 3-31-06
STRUCTURAL
STATE OF CALIFORNIA

JN JOHNSON & NIELSEN ASSOCIATES
CONSULTING STRUCTURAL ENGINEERS
647 N. Main St. Suite 4B, Riverside CA.

KROH/BROESKE ARCHITECTS
6180 BROCKTON AVE. SUITE 202
RIVERSIDE, CA. 92506-2228
TEL 909-788-5940
FAX 909-788-1365
E-MAIL: KBA@KROHBROESKE.COM

© These plans are not to be reproduced, changed or copied in any form or manner whatsoever nor are they to be R H A Landscape Architects -Planners, Inc. expressly reserves its common law copyright and other property rights in these plans. assigned to any third party without first obtaining the express written permission.

CLIENT:
CITY OF RIVERSIDE
PARK AND RECREATION DEPARTMENT
3900 MAIN STREET
RIVERSIDE, CA 92501

Did Not Award

PROJECT:
REID PARK EXPANSION
RIVERSIDE,CA

REVISIONS	DATE	BY
1 PLAN CHECK CORRECTION	7/12/05	C.E.L

NOT FOR CONSTRUCTION

SHEET TITLE
GENERAL NOTES & TYP. DETAILS - WOOD

DESIGNED	
DRAWN	
CHECKED	
DATE	7-22-04
SCALE	
JOB NO.	03032

SHEET
S0-2
SHEETS

28-229

RECEIVED
APR 18 2006
PARK & RECREATION PLANNING & DESIGN

BID SET 02-06-06

EXHAUST / RELIEF FAN SCHEDULE

SYMBOL	MANUF.	MODEL	SUPPLY AIR CFM	SUPPLY AIR ESP	FAN RPM	ELECTRICAL HP	ELECTRICAL V	ELECTRICAL PH	ELECTRICAL HZ	OPER. WT. LBS	REMARKS
EF 1 / EF 2	LOREN COOK	100C2B	600	0.125	1175	1/6	115	1	60	120C2B	W/ PRE-FAB ROOF CURB & BACKDRAFT DAMPER
EF 3 / EF 4	LOREN COOK	120C2B	887	0.125	930	1/6	115	1	60	120C2B	W/ PRE-FAB ROOF CURB & BACKDRAFT DAMPER

EF-1 AND EF-2 CONTROLLED BY MOTION SENSOR. MOTION SENSOR AND WIRING BY ELECTRICAL.

EF-3 AND EF-4 CONTROLLED BY ON-OFF SWITCH. ON-OFF SWITCH BY ELECTRICAL.

RV 1 / RV 2 — ROOF VENTILATION, LOREN COOK MODEL PR, SIZE 12, THROAT AREA 0.852 SQ FT W/ PRE-FAB ROOF CURB AND BIRD SCREEN. WT. 60 LBS MAX.

AC 2 / AC 3 — AIR CURTAIN, MARS MODEL 72C., (2) 1/2 HP MOTOR, 115V, 1PH, UNIT WT 120 LBS.

AIR CURTAIN SHALL BE CONTROLLED BY MICRO SWITCH FOR AUTOMATIC ON-OFF OPERATION.
UNIT WILL START AUTOMATICALLY WHEN DOOR IS OPENED AND STOP WHEN DOOR IS CLOSED.

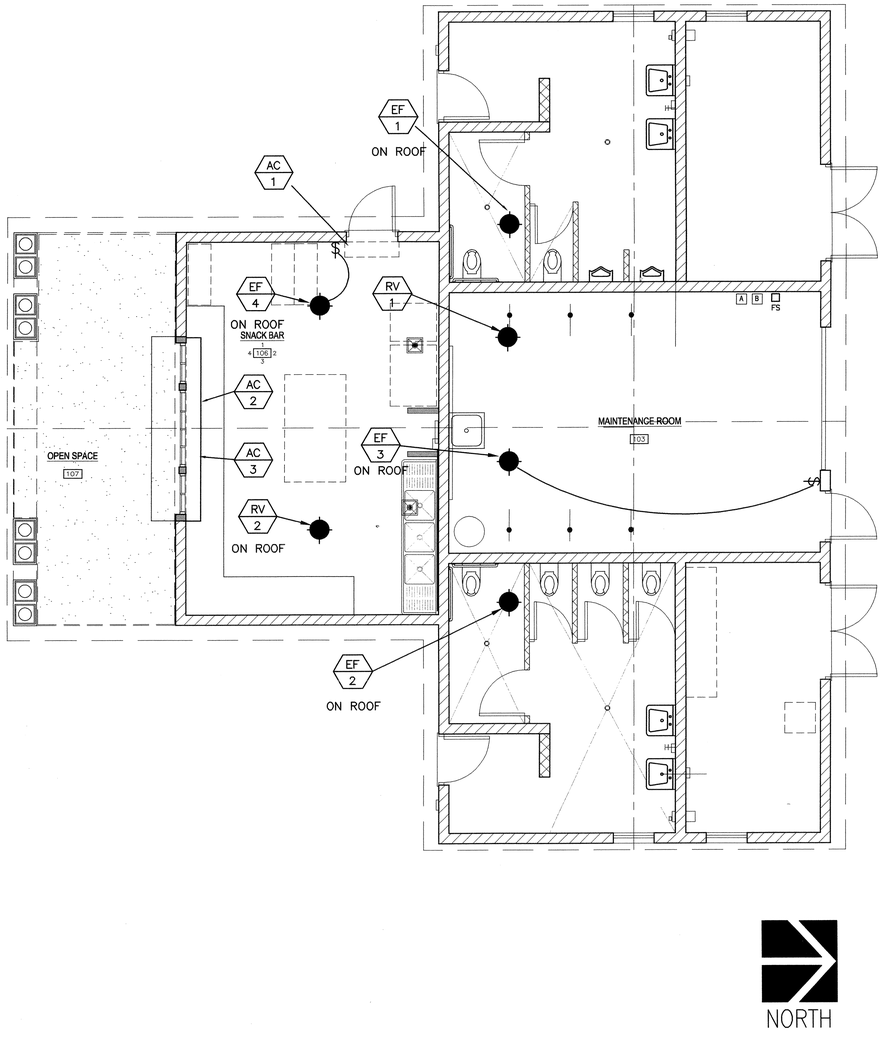

KROHI BROESKE ARCHITECTS
8180 BROCKTON AVE. SUITE 202
RIVERSIDE, CA. 92506-2226
TEL 951-788-5940
FAX 951-788-1365
E-MAIL: KBA@KROHIBROESKE.COM

© These plans are not to be reproduced, changed or copied in any form or manner whatsoever nor are they to be used for any purpose other than the purpose for which they are intended, without the written permission of the Architect. Any reproduction or copying of these plans without the written permission of the Architect is prohibited and violates the copyright and other property rights of these plans, except as may be used for any purpose other than the purpose for which they are intended.

CLIENT:
CITY OF RIVERSIDE
PARK AND RECREATION DEPARTMENT
3900 MAIN STREET
RIVERSIDE, CA 92501

PROJECT:
REID PARK EXPANSION
801 NORTH ORANGE ST.
RIVERSIDE,CA

Did Not Award

REVISIONS	DATE	BY
1	07.12.05	B.M.

LICENSED ARCHITECT
STEVEN MICHAEL KROHI
No. C012790
Ren. 7.31.2005
STATE OF CALIFORNIA

SHEET TITLE

DESIGNED
DRAWN A. Torres, B. Mantel, M. Mikhail
CHECKED B. GRIDLEY
DATE 7.22.04
SCALE
JOB NO. 03032

SHEET M2.1 OF SHEETS

PARK & RECREATION PLANNING & DESIGN

BID SET 02-06-06

CERTIFICATE OF COMPLIANCE (Part 1 of 2) MECH-1

PROJECT NAME Restroom and Concession Building			DATE 11-14-2003
PROJECT ADDRESS Reid Park, Riverside			Building Permit #
PRINCIPAL DESIGNER – MECHANICAL A. E. ENGINEERING		TELEPHONE 714-538-2286	
DOCUMENTATION AUTHOR Wing Fung		TELEPHONE 714-538-2286	Check by/Date Enforcement Agency use

GENERAL INFORMATION

DATE OF PLAN	BUILDING CONDITIONED FLOOR AREA 1680 s.f.		CLIMATE ZONE 10
BUILDING TYPE	☒ NONRESIDENTIAL	☐ HIGH RISE RESIDENTIAL	☐ HOTEL//MOTEL GUEST ROOM
PHASE OF CONSTRUCTION	☒ NEW CONSTRUCTION	☐ ADDITION ☐ ALTERATION	☒ UNCONDITIONED (file affidavit)
METHOD OF MECHANICAL COMPLIANCE	☐ PRESCRIPTIVE	☐ PERFORMANCE	
PROOF OF ENVELOPE COMPLIANCE	☐ PREVIOUS ENVELOPE PERMIT	☐ ENVELOPE COMPLIANCE ATTACHED	

NO A/C EQUIPMENT

STATEMENT OF COMPLIANCE

This certificate of Compliance lists the building features and performance specifications need to comply with Title 24, Parts 1 and 6 of the California Code of Regulations. This certificate applies only to building mechanical requirements.

The documentation preparer hereby certifiess that the documentation is accurate and complete.

DOCUMENTATION AUTHOR	SIGNATURE	DATE	
Wing Fung		11-14-2003	

The Principal Mechanical Designer hereby certifies that the proposed building design represented in this set of construction documents is consistent with the other compliance forms and worksheets, with the specifications, and with any other calculations submitted with this permit application. The proposed building has been designed to meet the mechanical requirements contained in the applicable parts of sections 110 through 115, 120 through 124, 140 through 142, 144 and 145.

Plase check one:

☐ I hereby affirm that I am eligible under the provisions of Division 3 of the Business and Professions Code to sign this document as the person responsible for its preparation; and that I am licensed in the State of California as a civil engineer or mechanical engineer, or I am a licensed architect.

☐ I affirm that I am eligible under the exemption to Division 3 of the Business and Professions Code by Section 5537.2 or 6737.3 to sign this document as the person responsible for its preparation, and that I am a licensed contractor performing this work.

☐ I affirm that I am eligible under the exemption to Division 3 of the Business and Professions Code to sign this document because it pertains to a structure or type of work described pursuant to Business and Professions Code Sections 5537, 5538 and 6737.1

(These sections of the Business and Professions Code are printed in full in the Nonresidential Manual.)

PRINCIPAL MECHANICAL DESIGNER – NAME	SIGNATURE	DATE	LIC. #
Wing Fung		11-14-2003	M-16715

ENVELOPE MANDATORY MEASURES

Indicate location on plans of Note Block for Mandatory Measures N/A

INSTRUCTIONS TO APPLICANT

For detailed instructions on the use of this and all Energy Efficiency Standards compliance forms, please refer to the Nonresidential Manual published by the California Energy Commission.
MECH-1: Required on plans for all submittals. Part 2 may be incorporated in schedules on plans.
MECH-2: Required for all submittals, but may be incorporated in schedules on plans.
MECH-3: Required for all submittals unless required ventilation rates and airflows are shown on plans. See 4.3.4.
MECH-4: Required for all prescriptive submittals.
MECH-5: Optional, Performance use only for mechanical distribution summary.

Nonresidential Compliance Form January 2001

CERTIFICATE OF COMPLIANCE (Part 1 of 2) ENV-1

PROJECT NAME Restroom and Concession Building			DATE 11-14-2003
PROJECT ADDRESS Reid Park, Riverside			Building Permit #
PRINCIPAL DESIGNER – ENVELOPE Kroh/Broeske Architects		TELEPHONE 909-788-5940	
DOCUMENTATION AUTHOR A E Engineering		TELEPHONE 949-651-9393	Check by/Date Enforcement Agency use

GENERAL INFORMATION

DATE OF PLANS	BUILDING CONDITIONED FLOOR AREA 1680 s.f.		CLIMATE ZONE 10
BUILDING TYPE	☒ NONRESIDENTIAL	☐ HIGH RISE RESIDENTIAL	☐ HOTEL//MOTEL GUEST ROOM
PHASE OF CONSTRUCTION	☒ NEW CONSTRUCTION	☐ ADDITION ☐ ALTERATION	☒ UNCONDITIONED (file affidavit)
METHOD OF ENVELOPE COMPLIANCE	☐ COMPONENT	☐ OVERALL ENVELOPE	☐ PERFORMANCE

STATEMENT OF COMPLIANCE

This Certificate of compliance lists the building features and performance specifications need to comply with Title 24, Part 1 and 6 of the California Code of Regulations. This certificate applies only to building envelope requirements.

The documentation preparer hereby certifiess that the documentation is accurate and complete.

DOCUMENTATION AUTHOR	SIGNATURE	DATE
WING FUNG		11-14-2003

The Principal Envelope Designer hereby certifies that the proposed building design represented in this set of construction documents is consistent with the other compliance forms and worksheets, with the specifications, and with any other calculations submitted with this permit application. The proposed building has been designed to meet the envelope requirements contained in sections 110, 116 through 118, and 140, 142, 143 or 149 of Title 24, Part 6.

Plase check one:

☐ I hereby affirm that I am eligible under the provisions of Division 3 of the Business and Professions Code to sign this document as the person responsible for its preparation; and that I am licensed in the State of California as a civil engineer or mechanical engineer, or I am a licensed architect.

☐ I affirm that I am eligible under the provisions of Division 3 of the Business and Professions Code by Section 5537.2 or 6737.3 to sign this document as the person responsible for its preparation, and that I am a licensed contractor performing this work.

☐ I affirm that I am eligible under Division 3 of the Business and Professions Code to sign this document because it pertains to a structure or type of work described as exempt pursuant to Business and Professions Code Sections 5537, 5538 and 6737.1

(These sections of the Business and Professions Code are printed in full in the Nonresidential Manual.)

PRINCIPAL ENVELOPE DESIGNER – NAME	SIGNATURE	DATE	LIC. #

ENVELOPE MANDATORY MEASURES

Indicate location on plans of Note Block for Mandatory Measures

INSTRUCTIONS TO APPLICANT

For detailed instructions on the use of this and all Energy Efficiency Standards compliance forms, please refer to the Nonresidential Manual published by the California Energy Commission.
ENV-1: Required on plans for all submittals. Part 2 may be incorporated in schedules on plans.
ENV-2: Used for all submittals; choose appropriate form depending on method of envelope compliance.
ENV-3: Optional. Use if default U-values are not used. Choose appropriate form for assembly U-value to be calculated.

Nonresidential Compliance Form January 2001

CERTIFICATE OF COMPLIANCE (Part 2 of 2) MECH-1

PROJECT NAME Restroom and Concession Building

SYSTEM FEATURES

SYSTEM NAME	MECHANICAL SYSTEMS N/A			NOTE TO FIELD Bldg. Dept. Use
TIME CONTROL	N/A			
SETBACK CONTROL	N/A			
ISOLATION ZONES	N/A			
HEAT PUMP THERMOSTAT?	N/A			
ELECTRIC HEAT?	N/A			
FAN CONTROL	N/A			
VAV MINIMUM POSITION CONTROL?	N/A			
SIMULTANEOUS HEAT/COOL?	N/A			
HEAT AND COOL SUPPLY RESET?	N/A			
HEAT REJECT CONTROL	N/A			
VENTILATION	N/A			
OUTDOOR DAMPER CONTROL?	N/A			
ECONOMIZER TYPE	N/A			
DESIGN O.A. CFM (MECH-3, COLUMN H)	N/A			
HEATING EQUIP. TYPE	N/A			
HIGH EFFICIENCY? / IF YES EBTER EFF. #	N/A			
MAKE AND MODEL NUMBER	N/A			
COOLING EQUIP. TYPE	N/A			
HIGH EFFICIENCY? / IF YES EBTER EFF. #	N/A			
MAKE AND MODEL NUMBER	N/A			
PIPE INSULATION REQUIRED?	N/A			
PIPE/DUCT INSULATIONPROTECTED	N/A			
HEATING DUCT LOCATION / R-VALUE	ABOVE CLG / N/A			
COOLING DUCT LOCATION / R-VALUE	ABOVE CLG / N/A			
VERIFIED SEALED DUCTS IN CEILING/ROOF SPACE / % FAN FLOW	N/A			

CODE TABLE: Enter code from table below into conlumns above.

		TIME CONTROL	SETBACK CTRL.	ISOLATION ZONES	FAN CONTROL
HEAT PUMP THERMOSTAT?	Y: Yes N: No	S: Prog. Switch O: Occupancy Sensor M: Manual Timer	H: Heating C: Cooling B: Both	Enter number of isolation Zones.	I: Inlet Vanes P: Variable Pitch V: VFD O: Other C: Curve
ELECTRIC HEAT?					
VAV MINIMUM POSITION CONTROL?					
SIMULTANEOUS HEAT/COOL?					
		VENTILATION	OUTDOOR DAMPER	ECONOMIZER	DESIGN O.A. CFM
HEAT AND COOL SUPPLY RESET?		B: Air Balance C: Outside Air Cert. M: Out. Air Measure D: Demand Control N: Natural	A: Auto G: Gravity	A: Air W: Water N: Not Required	Enter Design Outdoor Air CFM. Note: This shall be no less than Column H on MECH-3.
HIGH EFFICIENCY?					
DUCT TAPE ALLOWED?					
PIPE INSULATION REQUIRED?					

Nonresidential Compliance Form January 2001

CERTIFICATE OF COMPLIANCE (Part 2 of 2) ENV-1

PROJECT NAME Restroom and Concession Building

OPAQUE SURFACES

Surface Type	Construction Type (e.g., Block Wood, Metal)	Area	U-factor	Azimuth	Tilt	Solar Gains Y/N	Form 3 Reference	Location/Comments (e.g., Suspended Ceiling, Demising, etc.)	NOTE TO FIELD For Building Dept. Use Only
N/A						☐ ☐			
						☐ ☐			
						☐ ☐			
						☐ ☐			
						☐ ☐			
						☐ ☐			
						☐ ☐			
						☐ ☐			
						☐ ☐			

FENESTRATION SURFACES

Surface Type	Area	U-factor	Azimuth	SHGC	Glazing Type	Form 3 Reference	Location/Comments	NOTE TO FIELD – For Bldg. Dept. Use Only
N/A								

EXTERIOR SHADING

Fenestration #	Exterior Shade Type	SHGC	Window		Overhang				Left Fin			Right Fin		
			Height	Width	Length	Height	L.Ext.	R.Ext.	Dist.	Length	Height	Dist.	Length	Height

NOTES TO FIELD – For Building Department Use Only

Nonresidential Compliance Form January 2001

KROH | BROESKE ARCHITECTS
6180 BROCKTON AVE. SUITE 202
RIVERSIDE, CA. 92506-2228
TEL 951-788-5940
FAX 951-788-1365
E-MAIL: KBA@KROHBROESKE.COM

© These plans are not to be reproduced, changed or copied in any form or manner whatsoever nor are they to be assigned to any third party without first obtaining the express written permission. R H A Landscape Architects -Planners, Inc. expressly reserves its common law copyright and other property rights in these plans.

CLIENT: CITY OF RIVERSIDE
PARK AND RECREATION DEPARTMENT
3900 MAIN STREET
RIVERSIDE, CA 92501

Did Not Award

PROJECT: REID PARK EXPANSION
801 NORTH ORANGE ST.
RIVERSIDE,CA

REVISIONS	DATE	BY
1	07.12.05	B.M.

LICENSED ARCHITECT STEVEN MICHAEL KROH No. C012790 Ren. 7.31.2005 STATE OF CALIFORNIA

SHEET TITLE

DESIGNED	
DRAWN	A. Torres, B. Mantel, M. Mikhail
CHECKED	B. GRIDLEY
DATE	7.22.04
SCALE	
JOB NO.	03032

SHEET M5.1 OF SHEETS

RECEIVED APR 18 2006 PARK & RECREATION PLANNING & DESIGN

BID SET 02-06-06

PLUMBING FIXTURE SCHEDULE

SYMBOL	DESCRIPTION	CW	HW	W	V	TRAP	REMARKS
WC 1	WATER CLOSET HANDICAPPED	1"	–	3"	2"	INT.	AMERICAN STANDARD MODEL 2258.125, AFWALL EL 1.6, ELONGATED BOWL, WALL MOUNTED OFF FLOOR, VITREOUS CHINA, 1.6 GPF, BACK SPUD W/ CONCEALED SLOAN ROYAL FLUSH VALVE 144–1.6 AND OLSONITE 95 COMFORT CURVE SEAT AND FIXTURE CARRIER.
WC 2	WATER CLOSET	1"	–	3"	2"	INT.	AMERICAN STANDARD MODEL 2258.125, AFWALL EL 1.6, ELONGATED BOWL, WALL MOUNTED OFF FLOOR, VITREOUS CHINA, 1.6 GPF, BACK SPUD W/ CONCEALED SLOAN ROYAL FLUSH VALVE 144–1.6 AND OLSONITE 95 COMFORT CURVE SEAT AND FIXTURE CARRIER.
L 1	LAVATORY	1/2"	1/2"	2"	1–1/2"	2"	AMERICAN STANDARD LUCERNE WALL HUNG MODEL 0355.012, WHITE, W/ CHICAGO FAUCET MODEL 857–669 SELF–CLOSING METERING FAUCET
U 1	URINAL	3/4"	–	2"	2"	2"	AMERICAN STANDARD LYNBROOK 1.0, MODEL 6605.027, VITREOUS CHINA, 1.0 GPF, BACK STUD W/ SLOAN ROYAL FLUSH VALVE 190–1
FD 1	FLOOR DRAIN	1/4"	–	2"	1–1/2"	2"	ZURN #Z–415–B–P–VP, CAST IRON DRAIN W/ ROUND POLISHED BRONZE TOP, VANDAL–PROOF SCREWS, TRAP PRIMER CONNECTION AND P–TRAP J R SMITH 2699
S 1	3–COMPARTMENT SINK DRAIN TO F.S.	1/2"	1/2"	2"	–	–	LAMBERTSON INDUSTRIES, S.S. THREE–TUB, TWO DRAINBOARDS SIX HOLES, AS SPECIFIED BY OWNER. (2) FAUCETS, ELKAY MODEL LK–232–S, HIGH ARC, TWO HANDLES.
WHA 1	WATER HAMMER ARRESTER						SIOUX CHIEF #652–A
HB 1	HOSE BIBB	3/4"					ACORN #8120 WITN VACUUM AND WALL BOX
MV 1	MIXING VALVE	1/2"	1/2"				LEONARD THERMOSTATIC MIXING VALVE MODEL TM–15–E–RF, ANGLE CHECKSTOPS, WALL SUPPORT, TEMP REGULATOR KNOB, DIAL THERMOMETER.
FS 1	FLOOR SINK	1/4"	–	2"	1–1/2"	2"	JR SMITH 3110–14 WITH TRAP PRIMER JR SMITH 2699
WH 2	WATER HEATER						RHEEM ELECTRIC WATER HEATER, MODEL 81V30D, 30 GAL TANK, 4.5KW/4.5KW UPPER & LOWER ELEMENTS, NON–SIMLTANEOUS WIRING, 208V, 1 PH, CEC & UL LISTED
MS 1	MOP SINK	1/2"	1/2"	3"	2'	3"	FIAT MODEL TSB–100, 24X24X12, PRE–CAST TERRAZZO, W/ FAUCET FIAT MODEL 830–AA, AND VACUUM BREAKER

PLUMBING MATERIAL SCHEDULE

SERVICE	MATERIAL	COPPER, TYPE 'K'	COPPER, TYPE 'L'	SCHED. 40 BLACK STEEL	SCHED. 40 GALV. STEEL	C.I. SOIL PIPE & FITTINGS, S.W.	VITRIFIED CLAY	SCHED. 40 P.V.C.	ABS PLASTIC	REMARK
WATER	INSIDE		●							
	OUTSIDE	●								
SANITARY SEWER	INSIDE					●				
	OUTSIDE					●	●			
SANITARY VENT	INSIDE					●				
	OUTSIDE					●				
GAS	INSIDE									
	OUTSIDE									
STORM DRAINAGE	INSIDE									
	OUTSIDE									
CONDENSATE DRAIN	INSIDE							●		
	OUTSIDE							●		

PLUMBING FIXTURE UNIT COUNT

SYMBOL	FIXTURE	COLD WATER			SEWER		
		NO. OF FIXTURE	FIXTURE UNIT/ FIXTURE	TOTAL FIXTURE UNITS	NO. OF FIXTURE	FIXTURE UNIT/ FIXTURE	TOTAL FIXTURE UNITS
WC	WATER CLOSET	6	5.0	30	6	4.0	24
L	LAVATORY	4	1.0	4	4	1.0	4
U	URINAL	2	4.0	8	2	4.0	8
HB	HOSE BIBB	2	2.5 1.0	3.5	–	–	–
S	SINK(DRAIN TO FS)	1	3.0	3.0	1	3.0	3
FS	FLOOR SINK				2	1.0	2
MS	MOP SINK	1	2.0	2.0	1	3.0	3
	TOTAL, FU			50.5			43

DOMESTIC WATER PRESSURE CALCULATION

PRESSURE AVAILABLE, MINIMUM: 100 PSI REDUCED TO = 55 PSI

PRESSURE REQUIRED AT MOST REMOTE FIXTURE: = 25 PSI

PRESSURE LOSS DUE TO :

WATER METER = – PSI

HEIGHT OF FIXTURE = 15 FT X 0.43 PSI/FT = 6.5 PSI

OTHER LOSSES PRV = 10 PSI

TOTAL PRESSURE LOSSES = 41.5 PSI

PRESSURE AVAILABLE FOR PIPING FRICTION: = 55 – 41.5 = 13.5 PSI

EQUIVALENT LENGTH OF PIPING = 70 X 1.25 = 87.5 FT

ALLOWABLE FRICTION LOSS:

$$\frac{13.5\ \text{PSI} \times 100}{87.5\ \text{FT}} = 15.4\ \text{PSI/100 FT}$$

SIZING OF HOT AND COLD WATER PIPING
(FLUSH VALVE SYSTEM)

PIPE SIZE	GPM AT 15.4 PSI/100'	FIXTURE UNIT FLUSH VALVE	FIXTURE UNIT FLUSH TANK
1/2"	4	–	4
3/4"	12	–	16
1"	20 (max 8 pfs)	–	30
1-1/4"	30 (max 8 pfs)	13	54
1-1/2"	43 (max 8 pfs)	33	99
2"	74 (max 8 pfs)	124	245
2-1/2"			

PLUMBING LEGEND

SYMBOL	ABBRE.	DESCRIPTION
	S OR W	SOIL OR WASTE ABOVE FLOOR
	S OR W	SOIL OR WASTE BELOW FLOOR
SD	SD	STORM DRAIN ABOVE FLOOR
SD	SD	STORM DRAIN BELOW FLOOR
OF	OF	OVERFLOW DRAIN ABOVE FLOOR
OF	OF	OVERFLOW DRAIN BELOW FLOOR
	V	VENT
	CW	COLD WATER
	HW	HOT WATER
	HWR	HOT WATER RETURN
G	G	GAS
	FCO/COTG	FLOOR CLEANOUT/CLEANOUT TO GRADE
	COYB	CLEANOUT IN YARD BOX
	WCO	WALL CLEANOUT
	SOV	SHUT OFF VALVE
	BC	BALANCING COCK
	GC	GAS COCK
	P/T RV	PRESSURE/TEMPERATURE RELIEF VALVE
	U	UNION
	HB	HOSS BIBB
	WHA	WATER HAMMER ARRESTOR
CD	CO	CONDENSATE DRAIN

ABBRE.	DESCRIPTION	ABBRE.	DESCRIPTION
ABV	ABOVE	I.E.	INVERT ELEVATION
A/C	AIR CONDITIONING	INV.	INVERT
A.P.	ACCESS PANEL	LAT'L	LATERAL
BEL.	BELOW	M.H.	MANHOLE
BR.	BRANCH	N.I.C.	NOT IN CONTACT
CLG.	CEILING	O.F.D.	OVERFLOW DRAIN
CFH	CUBIC FEET PER HOUR	P.O.C.	POINT OF CONNECTION
&	–DITTO–	PRESS.	PRESSURE
CONN.	CONNECT(ION)	P.R.V.	PRESSUR REDUCE VALVE
CONT.	CONTINUE(ATION)	REQ'D	REQUIRED
DET.	DETAIL	RECOV	RECOVERY
DN.	DOWN	R.I. & C.	ROUGH–IN & CONNECT
D.S.	DOWNSPOUT	SHT	SHEET
EA.	EACH	TEMP.	TEMPERATURE
EXIST.	EXISTING	TERM.	TERMINATE
FIN.	FINISH(ED)	TYP.	TYPICAL
FLR.	FLOOR	VTR.	VENT THRU. ROOF
GR.	GRADE / GROUND	W/	WITH
GHP	GALLONS PER HOUR	@	AT
GPM	GALLONS PER MINUTE		
HDR.	HEADER		
HTR.	HEATER		

PLUMBING NOTES

1. VERIFICATION: BEFORE COMMENCEMENT OF WORK. THIS CONTRACTOR SHALL VERIFY THE EXACT LOCATIONS, ELEVATIONS, AND CHARACTERISTICS OF ALL UTILITIES AND PIPING INCLUDING ALL EXISTING PLUMBING SYSTEMS AND SHALL IMMEDIATELY NOTIFY THE ARCHITECT OF ANY DISCREPANCIES.
2. COORDINATION OF REQUIREMENTS: BEFORE FABRICATION OR INSTALLATION, THIS CONTRACTOR SHALL VERIFY EXACT LOCATIONS OF ALL MECHANICAL EQUIPMENT AND OTHER EQUIPMENT PROVIDED UNDER ANOTHER SECTION OF SPEC. OR BY THE OWNER. THE EXACT ROUGH–IN LOCATIONS AND REQUIREMENTS SHALL BE COORDINATED IN FIELD.
3. FIXTURE LOCATIONS AND MOUNTING HEIGHTS: EXACT LOCATIONS AND MOUNTING HEIGHTS OF PLUMBING FIXTURES SHALL BE OBTAINED FROM THE ARCHITECTURAL DRAWINGS.
4. HANDICAP REQUIREMENTS: SEE ARCHITECTRUAL DRAWINGS FOR HANDICAP FIXTURE LOCATIONS AND MOUNTING HEIGHTS. INSULATE ALL EXPOSED HOT WATER AND DRAIN PIPING BELOW HANDICAP LAVATORIES AND SINKS WITH McGUIRE "PROWRAP", TRUEBRO "LAV GUARD", OR APPROVED EQUAL.
5. UTILITY CONNECTIONS: THIS CONTRACTOR SHALL MAKE ALL ARRANGEMENTS WITH UTILITIES COMPANIES FOR SERVICES AND CONNECTIONS; AND SHALL MAKE APPLICATIONS FOR SERVICE IN THE NAME OF THE OWNER.
6. VALVES IN YARD: ALL EXTERIOR GAS COCKS AND WATER SHUT–OFF VALVES SHALL BE INSTALLED IN YARD BOXES WITH THE COVERS CONSPICUOUSLY MARKED "GAS SHUT–OFF" AND "WATER SHUT–OFF", RESPECTIVELY.
7. INTERFERENCE WITH EQUIPMENT: ALL PLUMBING WORK SHALL BE INSTALLED SO AS TO AVOID INTERFERENCE WITH ELECTRICAL AND MECHANICAL EQUIPMENT AND STRUCTURAL MEMBERS.
8. CUTTING: ALL CUTTING OF EXISTING PAVING, WALKS AND/OR FLOORS SHALL BE MACHINE SAW CUTTING. HOLES FOR PIPES IN CONCRETE WALLS OR FLOORS SHALL BE DONE USING CORE DRILLING EQUIPMENT.
9. PATCHING AND REPAIRS: THIS CONTRACTOR SHALL BE RESPONSIBLE FOR PATCHING AND REPAIRING ALL AREAS WHICH ARE EXCAVATED AND/OR DAMAGED BY HIS WORKS. IN ADDITION, THIS CONTRACTOR SHALL RESTORE THOSE AREAS TO THEIR ORIGINAL CONDITION INCLUDING THE PLANTED AREAS.
10. INCOMPATIBLE MATERIALS: CONNECTION BETWEEN INCOMPATIBLE MATERIALS ABOVE GRADE AND INSIDE BUILDING SHALL BE MADE WITH TWO DIELECTRIC UNIONS SEPARATED BY A 12 INCHES SECTION OF RED BRASS PIPE.
11. ELEVATION OF HORIZONTAL PIPING: ALL HORIZONTAL PIPING INCLUDING THOSE CONNECTED TO EQUIPMENT SHALL BE RUN AT THE HIGHEST POSSIBLE ELEVATION AND NOT LESS THAN 7' ABOVE FLOOR. PIPING ROUGH–IN SHALL BE STUBBED IN WALL WHENEVER POSSIBLE.
12. VENTS: VENT THROUGH ROOF SHALL BE INSTALLED MIN. 10'–0" FROM, OR 3'–0" ABOVE ANY FRESH AIR INTAKES OF BUILDING OR A.C.UNITS.
13. INSULATION OF HOT WATER PIPING: ALL HOT WATER PIPING SHALL BE INSULATED WITH RIGID INSULATION WITH K FACTOR=0.23. INSULATION SHALL 1' THICK FOR PIPE SIZES UP TO 2", AND 1–1/2' THICK FOR 2–1/2" AND LARGER.
14. PROVIDE AND INSTALL WALL CLEANOUTS ON THE UPPER TERMINAL OF ALL VENT BELOW FLOORS.
15. COORDINATION WITH MECHANICAL DRAWINGS: THESE DRAWINGS SHALL BE READ IN CONJUNCTION WITH AND BE CONSIDERED TO BE PART OF THE MECHANICAL DRAWINGS. PROVIDE AND SATISFY ALL PLUMBING REQUIREMENTS AS REQUIRED BY THE MECHANICAL EQUIPMENT.
16. PIPING INTO FLOOR SINKS: ALL PIPING DISCHARGING INTO FLOOR SINKS SHALL HAVE A MIN. 1" AIR GAP.
17. ALL VALVES AND UNIONS SHALL HAVE THE SAME SIZE AS THE LINE SIZE UNLESS OTHERWISE INDICATED ON THE DRAWINGS. UNIONS SHALL BE INSTALLED AFTER SCREW–TYPE VALVE AND PRIOR TO EQUIPEMNT CONNECTIONS.
18. CONNECTION FOR POTABLE WATER PIPING: SWEAT COPPER TYPE WITH 95/5 OR 96/4 TIN–ANTIMONY OR SILVABRITE 100 SOLDER. USE LEAD FREE SOLDER ONLY.
19. PLUMBING FIXTURE TRIM AND EXPOSED SUPPLIES AND WASTES SHALL BE BRASS WITH POLISHED CHROME PLATED FINSH. INDIVIDUAL ANGLE STOP VALVE SHALL BE PROVIDED FOR ALL HOT WATER AND COLD WATER SUPPLIES AND SHALL BE MOUNTED UNDER OR BEHIND THE FIXTURE. EXPOSED SUPPLIES AND WASTE TO WALL SHALL BE PROVIDED WITH POLISHED PLATED BRASS ESCUTCHEONS.
20. PROJECT WORK REQUIREMENT: IT IS THE INTENTION OF THE PLANS AND SPECTFICATIONS TO COVER ALL THINGS REQUIRED TO MAKE A COMPLETE AND OPERATIONAL SYSTEM. THIS CONTRACTOR IS TO FURNISH ALL LABOR, MATERIALS, TRANSPORTATIION, EQUIPMENT, MISCELLANEOUS SERVICES, ETC. TO ACCOMPLISH THIS RESULT. ANYTHING THAT MAY BE REASONABLY CONSIDERED AS A NECESSARY PART OF THE INSTALLATION IS TO BE INCLUDED, WHETHER SPECIFICALLY SHOWN OR MENTIONED. THE ENGINEER WILL GIVE ALL INTERPRETATIONS NECESSARY FOR THE CONTRACTOR TO PROPERLY ESTIMATE THE JOB.
21. PERFORM LEAK TEST FOR WASTE AND VENT SYSTEM BY FILL WASTE AND VENT PIPES WITH WATER TO 15 FEET ABOVE HIGHEST HORIZONTAL LINE TO BE TESTED. THE SYSTEM SHALL SHOW NO LEAKS FOR 4 HOURS. TEST THE RAINWATER DRAINAGE SYSTEM IN THE SAME MANNER.
22. PERFORM LEAK TEST FOR DOMESTIC HOT AND COLD WATER SYSTEM AT 150 PSIG HYDROSTATIC PRESSURE FOR 4 HOURS AND SHOW NO LEAKS.
23. STERILIZE POTABLE WATER SYSTEM WITH SOLUTION CONTAINING 200 PPM OF CHLORINE AND MAINTAINING A PH OF 7.5 MINIMUM. ALLOW STERLIZATION SOLUTION TO REMAIN FOR 24 HOURS AND OPEN AND CLOSE VALVES AND FAUCETS SEVERAL TIMES. AFTER STERLIZATION, FLUSH SOLUTION FROM THE SYSTEM WITH CLEAN WATER UNTIL RESIDUAL CHLORINE IS LESS THAN 0.2 PPM.

KROHIBROESKE ARCHITECTS
6180 BROCKTON AVE. SUITE 202
RIVERSIDE, CA. 92506-2228
TEL 951-788-5940
FAX 951-788-1365
E-MAIL: KBA@KROHBROESKE.COM

© These plans are not to be reproduced, changed or copied in any form or manner whatsoever nor are they to be R H A Landscape Architects –Planners, Inc. expressly reserve its common law copyright and other property rights in these plans, assigned to any third party without first obtaining the express written permission.

CLIENT: CITY OF RIVERSIDE
PARK AND RECREATION DEPARTMENT
3900 MAIN STREET
RIVERSIDE, CA 92501

Did Not Award

PROJECT: REID PARK EXPANSION
801 NORTH ORANGE ST.
RIVERSIDE,CA

REVISIONS	DATE	BY
1	07.12.05	B.M.

CONSTRUCTION SET

LICENSED ARCHITECT STEVEN MICHAEL KROH No. C012790 Ren. 7.31.2005 STATE OF CALIFORNIA

SHEET TITLE

DESIGNED
DRAWN A. Torres, B. Mantel, M. Mikhail
CHECKED B. GRIDLEY
DATE 7.22.04
SCALE
JOB NO. 03032

SHEET P0.1 OF SHEETS

RECEIVED APR 18 2006 PARK & RECREATION PLANNING & DESIGN

BID SET 02-06-06

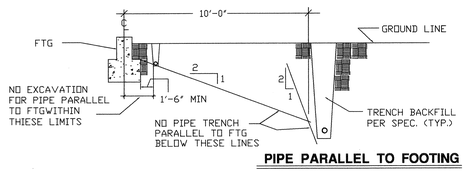

PIPE PARALLEL TO FOOTING

PIPE THROUGH FOOTING (1)

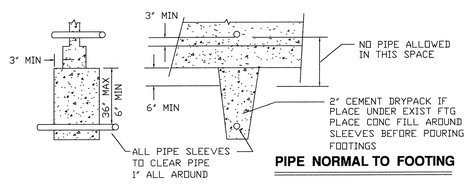

PIPE NORMAL TO FOOTING

PIPE THROUGH FOOTING (2)

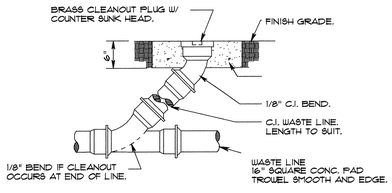

CLEANOUT TO GRADE (3)

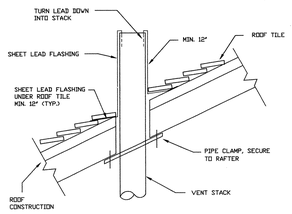

VENT THRU ROOF (4)

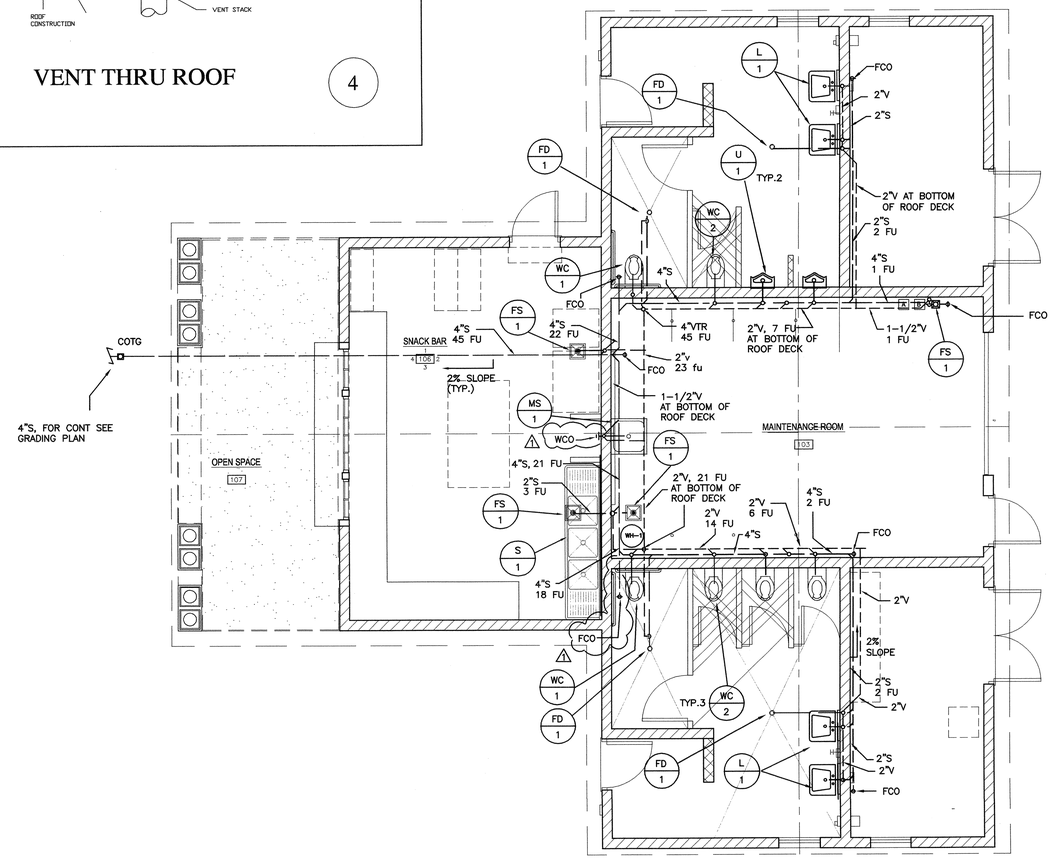

NORTH

KROHIBROESKE ARCHITECTS
8180 BROCKTON AVE. SUITE 202
RIVERSIDE, CA. 92506-2228
TEL 951-788-5940
FAX 951-788-1365
E-MAIL: KRA@KROHIBROESKE.COM

© These plans are not to be reproduced, changed or copied in any form or manner whatsoever, nor are they to be used for any purpose not specifically agreed to in writing by the architect. Copyright © 2005 Krohi Broeske Architects, Inc. (KRA)

CLIENT:
CITY OF RIVERSIDE
PARK AND RECREATION DEPARTMENT
3900 MAIN STREET
RIVERSIDE, CA 92501

PROJECT:
REID PARK EXPANSION
801 NORTH ORANGE ST.
RIVERSIDE,CA

Do Not Bid

REVISIONS	DATE	BY
1	07.12.05	B.M.

LICENSED ARCHITECT STEPHEN MICHAEL GRIDLEY No. C012700 Ren. 7.31.2005 STATE OF CALIFORNIA

SHEET TITLE

DESIGNED	
DRAWN	A. Torres, B. Manzel, M. Mikhail
CHECKED	B. GRIDLEY
DATE	7.22.04
SCALE	
JOB NO.	03032

SHEET P2.1 OF SHEETS

RECEIVED FEB 15 2006 DRAINS & HEALTHY SETTING DEVELOPMENT & DIVISION

BID SET 02-06-06

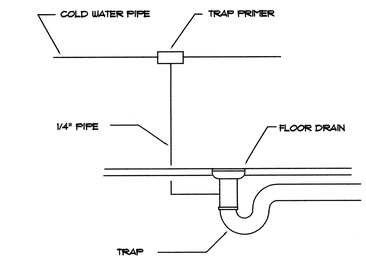

TRAP PRIMER FOR FLOOR DRAIN (1)

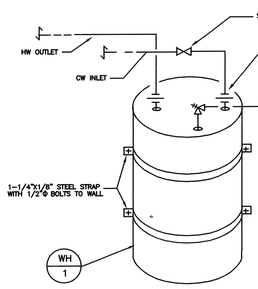

WATER HEATER (2)

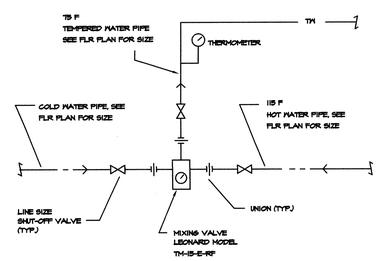

MIXING VALVE INSTALLATION DETAIL (3)

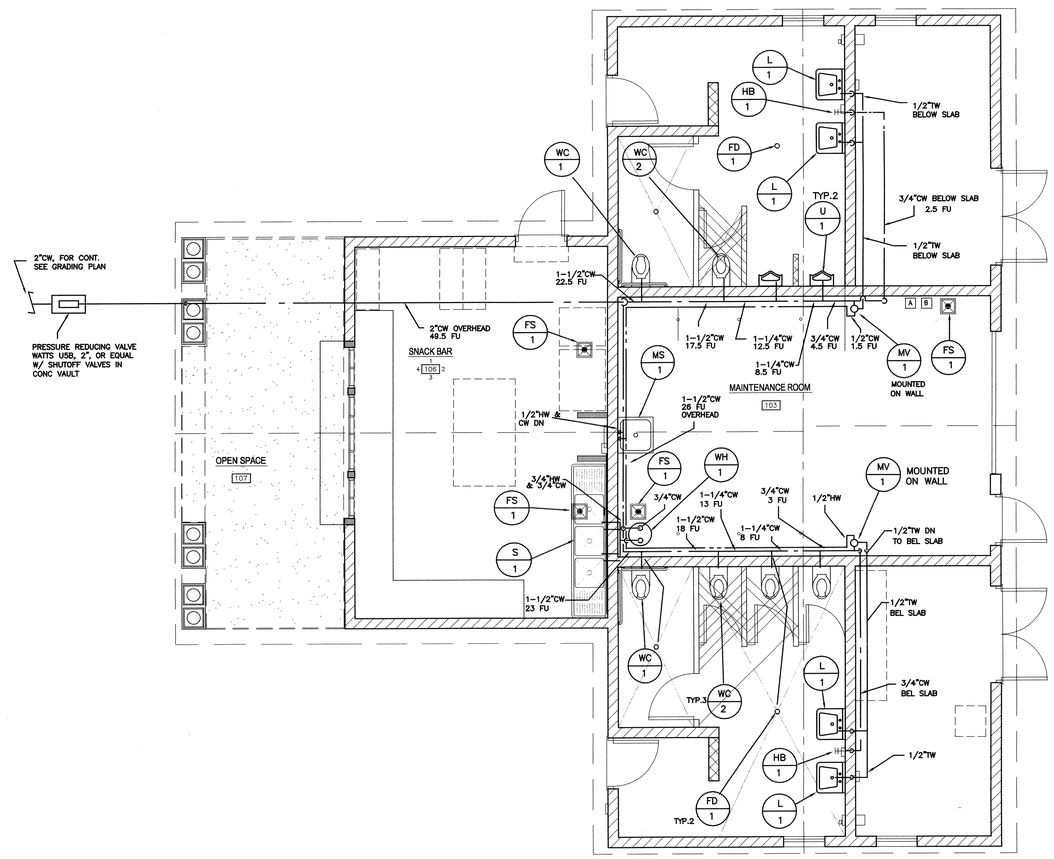

NORTH

BID SET 02-06-06

KROHI BROESKE ARCHITECTS
8180 BROCKTON AVE. SUITE 202
RIVERSIDE, CA. 92506-2226
TEL 951-788-5940
FAX 951-788-1365
E-MAIL: KBA@KROHIBROESKE.COM

© These plans are not to be reproduced, copied or used in any form or manner whatsoever nor are they to be loaned to a third party without the written consent of Krohi Broeske Architects, Inc. (KBA). Ownership of these plans remains with KBA and must be returned upon request.

CLIENT:
CITY OF RIVERSIDE
PARK AND RECREATION DEPARTMENT
3900 MAIN STREET
RIVERSIDE, CA 92501

PROJECT:
REID PARK EXPANSION
801 NORTH ORANGE ST.
RIVERSIDE, CA

Did Not Install

REVISIONS	DATE	BY
1	07.12.05	B.M.

LICENSED ARCHITECT BRIAN MICHAEL MONK No. C012790 Exp. 7.31.2005 STATE OF CALIFORNIA

SHEET TITLE

DESIGNED	
DRAWN	A. Torres, B. Monk, M. Mikhail
CHECKED	B. GRIDLEY
DATE	7.22.04
SCALE	
JOB NO.	03032

SHEET P2.2 OF SHEETS

PARK & RECREATION PLANNING & DESIGN