REID PARK EXPANSION

RIVERSIDE, CA

PARK AND RECREATION DEPT.
3900 MAIN STREET
RIVERSIDE, CA 92522

CONTACT: ANDREW EMERY (951) 826-2021

CONSULTANTS

ARCHITECT:

KROH/BROESKE ARCHITECTS
6180 BROCKTON AVE., SUTIE 202
RIVERSIDE, CA 92506
TEL: (951) 788-5940
FAX: (951) 788-1365
CONTACT: BRENDA MANTEL

ELECTRICAL ENGINEER:

REEDCORP ENGINEERING
2061 BUSINESS CENTER DR., SUITE 110
IRVINE, CA 92612
TEL: (949) 752-1278
FAX: (949) 752-1287
CONTACT: RON REED

CIVIL ENGINEER:

ARMSTRONG & BROOKS
1530 CONSUMER CIRCLE
CORONA, CA 92880
TEL: (951) 372-8400
FAX: (951) 372-8430
CONTACT: BILL BROOKS

LEGEND

GENERAL NOTES

VICINITY MAP

N.T.S.

REVISIONS

NO.	REVISION FOR	BY	DATE	APPROVED BY
3				

APPROVALS

PRINCIPAL PARK PLANNER

RECREATION SUPERINTENDENT

PARK SUPERINTENDENT

PARK AND RECREATION DIRECTOR

KEY MAP

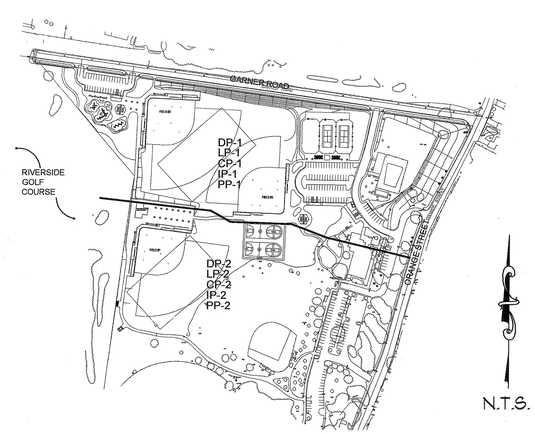

N.T.S.

SHEET INDEX

TS	1 OF 1	TITLE SHEET

CIVIL ENGINEERING

GP-1	1 OF 6	TITLE SHEET & GENERAL NOTES
GP-2	2 OF 6	SECTIONS & DETAILS
GP-3	3 OF 6	PRECISE GRADING PLAN
GP-4	4 OF 6	PRECISE GRADING PLAN
GP-5	5 OF 6	PRECISE GRADING PLAN
GP-6	6 OF 6	PRECISE GRADING PLAN
ST-1	1 OF 3	STREET IMPROVEMENT PLAN - GARNER ROAD
ST-2	2 OF 3	STREET IMPROVEMENT PLAN - GARNER ROAD
ST-3	3 OF 3	STREET IMPROVEMENT PLAN - GARNER ROAD
S-1967	4 SHEETS	SEWER IMPROVEMENT PLANS

LANDSCAPE ARCHITECTURAL

DP-1	1 OF 19	DEMOLITION PLAN
DP-2	2 OF 19	DEMOLITION PLAN
LP-1	3 OF 19	LAYOUT PLAN
LP-2	4 OF 19	LAYOUT PLAN
CP-1	5 OF 19	CONSTRUCTION PLAN
CP-2	6 OF 19	CONSTRUCTION PLAN
CD-1	7 OF 19	BALLFIELD CONSTRUCTION PLAN
CD-2	8 OF 19	BALLFIELD CONSTRUCTION PLAN
CD-3	9 OF 19	PLAY GROUND CONSTRUCTION PLAN
CD-4	10 OF 19	SHELTER CONSTRUCTION & DETAILS
CD-5	11 OF 19	CONSTRUCTION DETAILS
CD-6	12 OF 19	CONSTRUCTION DETAILS
CD-7	13 OF 19	CONSTRUCTION DETAILS
IP-1	14 OF 19	IRRIGATION PLAN-BASE BID
IP-2	15 OF 19	IRRIGATION PLAN-ADD ALTS
ID-1	16 OF 19	IRRIGATION DETAILS
PP-1	17 OF 19	PLANTING PLAN
PP-2	18 OF 19	PLANTING PLAN
PD-1	19 OF 19	PLANTING DETAILS

ELECTRICAL

E-1	1 OF 6	ELECTRICAL SITE PLAN
E-2	2 OF 6	ELECTRICAL SITE PLAN
E-3	3 OF 6	ELECTRICAL DETAILS
E-4	4 OF 6	MUSCO DETAILS & ELECTRICAL DETAILS
E-5	5 OF 6	TENNIS COURT ELECTRICAL PLAN
E-6	6 OF 6	FUTURE RESTROOM / CONCESSION BUILDING ELECTRICAL & DETAILS
P.U. DWG.- (3 SHEETS)		UNDERGROUND ELECTRICAL SERVICE DESIGN FOR REID PARK & GARNER ROAD

3

DELETED ARCHITECTURAL PLANS FOR THE SITE BUILT RESTROOM/CONCESSION.

RHA LANDSCAPE ARCHITECTS PLANNERS, INC.
3612 MISSION INN AVE
RIVERSIDE, CALIFORNIA 92501
LIC. #1512
PH. (951) 781-1930
FAX (951) 686-8091

© R.H.A. Landscape Architects–Planners, Inc. expressly reserves its common law copyright and other property rights in these plans. These plans are not to be reproduced, changed or copied in any form or manner whatsoever, nor are they to be assigned to any third party without first obtaining the express written permission.

CLIENT:
THE CITY OF RIVERSIDE
PARK AND RECREATION DEPT.
3900 Main Street
Riverside, California 92522

PROJECT:
Reid Park Expansion
Orange St. and Garner Rd.

REVISIONS	DATE	BY
3 CONFORMED SET	9/5/06	MH

LICENSED LANDSCAPE ARCHITECT
SOPHIA A. GROVER No. 2787
Signature
11/09/07
Renewal Date
Date
STATE OF CALIFORNIA

SHEET TITLE
TITLE SHEET

DESIGNED	MH/DG
DRAWN	MH/DG
CHECKED	DG
DATE	08-30-06
SCALE	PER PLAN
JOB NO.	03111

SHEET
TS
1 OF 1 SHEETS

[One Inch on Original Sheet] Drawing File: N:\Projects\03p\03111 Reid Park Expansion\AutoCAD\R1 - design\CD\FINal Construction Set 08-30-06\ 03111 CV Sep 11, 2006 - 10:52am

PRECISE GRADING PLAN—REID PARK PHASE 1

GRADING/EROSION CONTROL GENERAL NOTES

1. ALL GRADING SHALL CONFORM TO THE RIVERSIDE MUNICIPAL CODE, TITLE 17 AND APPENDIX CHAPTER 33, VOL. 1 OF THE CURRENT CITY-ADOPTED EDITION OF THE UNIFORM BUILDING CODE.
2. ALL PROVISIONS OF THE PRELIMINARY SOILS REPORT PREPARED BY CONVERSE CONSULTANTS DATED DECEMBER 16, 2003 SHALL BE COMPLIED WITH DURING GRADING OPERATIONS. CITY BUSINESS TAX CERTIF. NO. 1080, EXP. 8/31/05.
3. THIS PLAN IS FOR GRADING PURPOSES ONLY AND IS NOT TO BE USED FOR THE PURPOSE OF CONSTRUCTING ON-SITE OR OFF-SITE IMPROVEMENTS. ISSUANCE OF A PERMIT BASED ON THIS PLAN DOES NOT CONSTITUTE APPROVAL OF DRIVEWAY LOCATIONS OR SIZES, PARKING LOT STRUCTURAL SECTIONS OR LAYOUT, ADA-RELATED REQUIREMENTS, BUILDING LOCATIONS OR FOUNDATIONS, WALLS, CURBING, OFF-SITE DRAINAGE FACILITIES OR OTHER ITEMS NOT RELATED DIRECTLY TO TH BASIC GRADING OPERATION. ON-SITE IMPROVEMENTS SHALL BE CONSTRUCTED FROM APPROVED BUILDING PERMIT PLANS. OFF-SITE IMPROVEMENTS SHALL BE CONSTRUCTED FROM PLANS APPROVED FOR THIS PURPOSE BY THE PUBLIC WORKS DEPARTMENT.
4. CERTIFICATION FROM THE REGISTERED (CIVIL ENGINEER/ARCHITECT/LANDSCAPE ARCHITECT) STATING THAT THE GRADING HAS BEEN COMPLETED PER THE APPROVED PLAN, AND A COMPACTION REPORT FROM THE SOIL ENGINEER FOR FILL AREAS ARE REQUIRD PRIOR TO BUILDING PERMITS BEING ISSUED.
5. CONTRACTOR IS RESPONSIBLE FOR EROSION, DUST AND TEMPORARY DRAINAGE CONTROL DURING GRADING OPERATIONS AND ALL PHASES OF CONSTRUCTION.
a. ALL MANUFACTURED SLOPES IN EXCESS OF 5 FEET IN VERTICAL HEIGHT ARE TO BE PROTECTED FROM EROSION DURING ROUGH GRADING OPERATIONS AND, THEREAFTER, UNTIL INSTALLATION OF FINAL GROUNDCOVER. (SEE LANDSCAPE PLAN FOR FINAL GROUNDCOVER).
b. ALL SLOPE PROTECTION SWALES TO BE CONSTRUCTED AT THE SAME TIME AS BANKS ARE GRADED.
c. THE DEVELOPER AND HIS CONTRACTOR ARE RESPONSIBLE FOR IMPLEMENTATION AND MAINTENANCE OF THE EROSION CONTROL MEASURE SHOWN ON THIS PLAN AND SWPPP AND ALSO TO PROVIDE ANY ADDITIONAL EROSION CONTROL MEASURE (E.G., HYDROSEEDING, MULCHING OF STRAW, SAND-BAGGING, DIVERSION DITCHES, RETENTION BASINS, ETC.) DICTATED BY FIELD CONDITIONS TO PREVENT EROSION AND/OR THE INTRODUCTION OF DIRT, MUD OR DEBRIS INTO EXISTING PUBLIC STREETS AND/OR ONTO ADJACENT PROPERTIES DURING ANY PHASE OF CONSTRUCTION OPERATIONS. SPECIAL ATTENTION SHALL BE GIVEN TO ADDITIONAL EROSION CONTROL MEASURES NOTED ABOVE DURING THE PERIOD OCTOBER 15 TO APRIL 15.
d. AFTER A RAINSTORM, ALL SILT AND DEBRIS SHALL BE REMOVED FROM CHECK BERMS AND CHECK DAMS. SILT AND DEBRIS SHALL BE REMOVED FROM CITY OF RIVERSIDE STREETS. THIS REQUIREMENT SHALL REMAIN IN EFFECT UNTIL CITY ACCEPTANCE OF THE SUBDIVISION THAT DRAINS ONTO CITY STREETS.
6. ANY ON-SITE RETAINING WALLS SHOWN ON THIS PLAN THAT ARE UNDER 3 FEET IN HEIGHT AND SUPPORT A SURCHARGE OR THAT ARE OVER 3 FEET IN HEIGHT REQUIRE SEPARATE REVIEW, APPROVAL AND A BUILDING PERMIT FROM THE BUILDING DIVISION, PLANNING DEPARTMENT. ANY NECESSARY RETAINING WALLS ON THE PERIMETER OF THIS SITE SHALL BE IN PLACE AND APPROVED BY THE BUILDING INSPECTOR PRIOR TO ISSUANCE OF THE GRADING PERMIT. APPROVED SEQUENCED GRADING WITH 1 1/2:1 MAXIMUM SLOPES TO WITHIN 2 FEET OF THE ADJACENT PROPERTY LINE MAY BE ACCEPTABLE TO ALLOW FOR ISSUANCE OF A GRADING PERMIT PRIOR TO COMPLETION OF ANY NECESSARY PERIMETER RETAINING WALLS. (IF NO RETAINING WALLS ARE SHOWN ON THE PLAN, DO NOT PUT THIS NOTE ON PLAN.)
7. ANY IMPROVEMENTS CONSTRUCTED IN THE PUBLIC RIGHT-OF-WAY WILL REQUIRE A SEPARATE CONSTRUCTION PERMIT AND INSPECTION FROM THE PUBLIC WORKS DEPARTMENT.
8. ANY WALLS, FENCES, STRUCTURES AND/OR APPURTENANCES ADJACENT TO THIS PROJECT ARE TO BE PROTECTED IN PLACE. IF GRADING OPERATIONS DAMAGE OR ADVERSELY AFFECT SAID ITEMS IN ANY WAY, THE CONTRACTOR AND/OR DEVELOPER IS RESPONSIBLE FOR WORKING OUT AND ACCEPTABLE SOLUTION TO THE SATISFACTION OF THE AFFECTED PROPERTY OWNER(S).
9. THE CONTRACTOR/DEVELOPER IS RESPONSIBLE FOR ENSURING THAT RETAINING WALLS DO NOT INTERFERE WITH PROVISION OF UTILITIES.
10. IT IS THE GRADING CONTRACTOR'S RESPONSIBILITY TO ENSURE THAT ADEQUATE COMPACTION HAS BEEN ATTAINED ON THE ENTIRE GRADING SITE, INCLUDING FILL AREAS OUTSIDE THE BUILDING PADS AND ON ALL FILL SLOPES.
11. IT IS THE SOIL ENGINEER'S RESPONSIBILITY TO OBSERVE AND PERFORM COMPACTION TESTS DURING THE GRADING TO EVALUATE THE PREPERATION OF THE NATURAL GROUND SURFACE TO RECEIVE THE FILL AND THE COMPACTION ATTAINED IN THE FILL, INCLUDING FILL AREAS OUTSIDE THE BUILDING PADS AND ON ALL FILL SLOPES.
12. EARTHWORK QUANTITIES ARE SHOWN FOR GRADING PERMIT PURPOSES ONLY, AND THE CITY OF RIVERSIDE IS NOT RESPONSIBLE FOR THEIR ACCURACY.
13. FOR GRADING OF AREAS OF 1 ACRES OR MORE, A STORM WATER POLLUTION PREVENTION PLAN (SWPPP) SHALL BE KEPT ON-SITE AND MADE AVAILABLE UPON REQUEST OF A REPRESENTATIVE OF THE REGIONAL WATER QUALITY CONTROL BOARD (RWQCB) – SANTA ANA REGION AND/OR THE CITY OF RIVERSIDE.
14. GRADING OPERATIONS SHALL BE LIMITED TO BETWEEN THE HOURS OF 7 A.M. AND 7 P.M. ON WEEKDAYS AND BETWEEN 8 A.M. AND 5 P.M. ON SATURDAYS. NO GRADING WILL BE PERMITTED ON SUNDAYS OR FEDERAL HOLIDAYS. (RIVERSIDE MUNICIPAL CODE, 7.35.010, ORDINANCE NO. 6273)

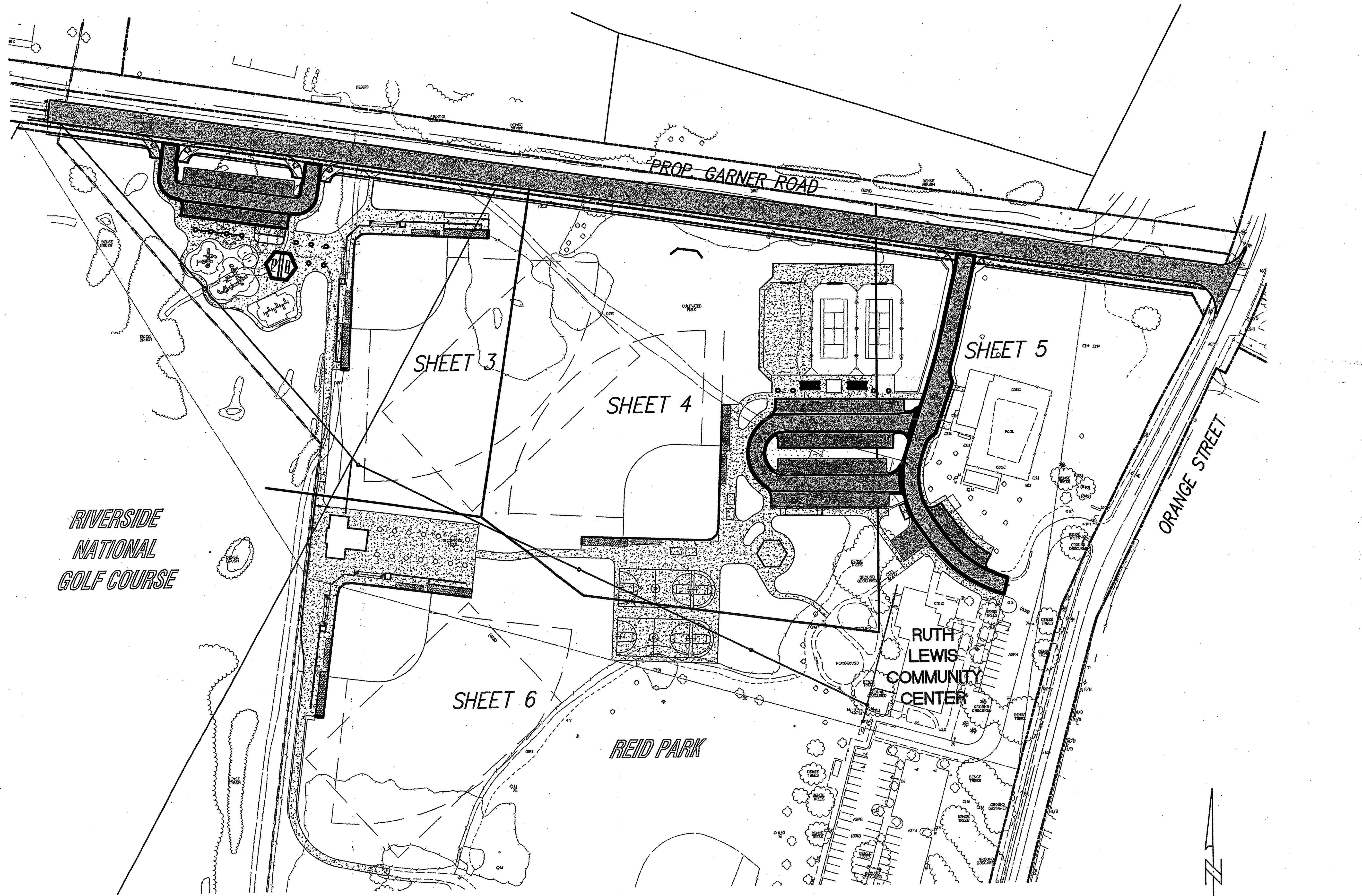

INDEX MAP

SCALE 1" = 80'

NOTICE TO CONTRACTORS

THE EXISTENCE AND LOCATION OF ANY UNDERGROUND UTILITY PIPES, CONDUITS, OR STRUCTURES SHOWN ON THESE PLANS WERE OBTAINED BY A SEARCH OF AVAILABLE RECORDS. TO THE BEST OF OUR KNOWLEDGE, THERE ARE NO EXISTING UTILITIES EXCEPT THOSE SHOWN ON THESE PLANS. THE CONTRACTOR IS REQUIRED TO TAKE PRECAUTIONARY MEASURES TO PROTECT THE UTILITY LINES SHOWN ON THESE DRAWINGS. THE CONTRACTOR FURTHER ASSUMES ALL LIABILITY AND RESPONSIBILITY FOR THE UTILITY PIPES, CONDUITS OR STRUCTURES, SHOWN OR NOT SHOWN ON THESE PLANS

CONTRACTOR AGREES THAT HE SHALL ASSUME SOLE AND COMPLETE RESPONSIBILITY FOR JOBSITE CONDITIONS DURING THE COURSE OF CONSTRUCTION ON THIS PROJECT, INCLUDING SAFETY OF ALL PERSONS OR PROPERTY; THAT THIS REQUIREMENT SHALL APPLY CONTINUOUSLY AND NOT BE LIMITED TO NORMAL WORKING HOURS; THAT THE CONTRACTOR SHALL DEFEND, INDEMNIFY, AND HOLD THE CITY, THE OWNER, AND THE ENGINEER HARMLESS FROM ANY AND ALL LIABILITY, REAL OR ALLEGED, IN CONNECTION WITH THE PERFORMANCE OF WORK ON THIS PROJECT.

THE CONTRACTOR SHALL CALL IN A LOCATION REQUEST TO UNDERGROUND SERVICE ALERT (USA) PH. 1-800-422-4133, TWO (2) WORKING DAYS PRIOR TO DIGGING. NO CONSTRUCTION PERMIT ISSUED BY THE PUBLIC WORKS DEPARTMENT SHALL BE VALID INVOLVING UNDERGROUND FACILITIES UNLESS THE APPLICANT HAS AN INQUIRY IDENTIFICATION NUMBER ISSUED BY U.S.A.

CARE SHOULD BE TAKEN TO PREVENT GRADED DITCHES AND SWALES FROM UNDERMINING STREET IMPROVEMENTS. UPON INSPECTION OF THE SITES, THE CITY ENGINEER MAY REQUIRE TEMPORARY GUNITE SWALES, ENTERING OR LEAVING IMPROVEMENTS.

EARTHWORK RAW QUANTITIES

NOTE: THE CONSTRUCTION QUANTITIES SHOWN ON THESE PLANS ARE FOR CITY FEE PURPOSES ONLY.
IT IS THE CONTRACTOR'S RESPONSIBILITY TO PERFORM INDIVIDUAL TAKEOFFS FOR BIDDING PURPOSES.

(PRELIMINARY QUANTITIES DO NOT INCLUDE SHRINKAGE FACTOR AND OVEREXCAVATION OVER THE SITE)

RAW CUT	20,150 YDS
RAW FILL	17,750 YDS
NET EXPORT	2,400 YDS

ALL MATERIAL EXPORTED FROM THIS SITE SHALL BE DISPOSED OF IN A MANNER IN COMPLIANCE WITH ALL RULES AND REGULATIONS OF APPROPRIATE JURISDICTIONAL AGENCIES

ENGINEER

ARMSTRONG & BROOKS CONSULTING ENGINEERS
1530 CONSUMER CIRCLE UNIT B
CORONA, CA 92880
PH. (951) 372-8400 FAX (951) 372-8430
CITY OF RIVERSIDE BUS. TAX # 105482 EXPIRES 9/28/2006

OWNER

CITY OF RIVERSIDE PARKS & RECREATION DEPARTMENT
3900 MAIN STREET
RIVERSIDE, CA 92522
PH. (909) 826-2021

SHEET INDEX

1-TITLE SHEET & GENERAL NOTES
2-MISC. SECTIONS & DETAILS
3-PRECISE GRADING PLAN
4-PRECISE GRADING PLAN
5-PRECISE GRADING PLAN
6-PRECISE GRADING PLAN

SITE AREA

30.0 ACRES

DISTURBED AREA

13.5 ACRES

WDID NO.

#83333M000135

BENCHMARK

COUNTY SURVEYOR'S BRASS MONUMENT WELL AT THE CENTERLINE INTERSECTION OF NORTH MAIN STREET AND PLACENTIA LANE, COUNTY BENCHMARK K7-B2, ADJUSTED 1971, ELEV. 833.594

SITE ADDRESS

701 ORANGE STREET

SOILS ENGINEER

CONVERSE CONSULTANTS
10391 CORPORATE DRIVE
REDLANDS, CA 92374
PH. (909) 796-0544 FAX (909) 796-7675

LEGEND

(1001.01)	EXISTING ELEVATION
	EXISTING SIDEWALK
	STREET LIGHT
	FIRE HYDRANT
	WATER METER
	WATER LINE WITH VALVE
	SEWER LINE WITH MANHOLE
	CATCH BASIN
	PULL BOX
	STREET LIGHT SERVICE
	BLOW-OFF VALVE OR COMB. B.O. & A.V.
	CURB & GUTTER
	HANDICAPPED RAMP

STOCKPILE PERMIT

PERMIT NO. PW04-0199
THE STOCKPILED SOILS WILL BE INCORPORATED INTO THE REID PARK SITE

CONSTRUCTION SET 7-20-06 (Replace the 4/8/06 set) except Add tree well drains and pipes on GP-6 per Construction set issued on 4/8/06

KRat - Ø
Permit - 528.00

REGISTERED PROFESSIONAL ENGINEER WILLIAM D. BROOKS No. C53114 Exp. 6/30/07 CIVIL STATE OF CALIFORNIA

RECEIVED
MAY 12 2006
DEPT. OF PUBLIC WORKS

PLANNING DEPARTMENT
APPROVED BY 5/11/06 DATE

WDID # 833M000135 | PW05-0147

RHA LANDSCAPE ARCHITECTS PLANNERS INC.
3612 MISSION INN AVE
RIVERSIDE, CALIFORNIA 92501
LIC. #1512
PH. (951) 781-1930
FAX (951) 686-8091

© R H A Landscape Architects –Planners, Inc. expressly reserves its common law copyright and other property rights in these plans. These plans are not to be reproduced, changed or copied in any form or manner whatsoever nor are they to be assigned to any third party without first obtaining the express written permission.

CLIENT:
THE CITY OF RIVERSIDE
PARK AND RECREATION DEPT.
3900 Main Street
Riverside, California 92522

PROJECT:
Reid Park Expansion
Community Park
Orange St. and Garner Rd.

REVISIONS	DATE	BY

LICENSED LANDSCAPE ARCHITECT RANDOLPH HLUBIK NO. 1512 Signature 7/31/08 Renewal Date Date STATE OF CALIFORNIA

SHEET TITLE
TITLE SHEET

DESIGNED	WDB
DRAWN	SJN
CHECKED	DGA
DATE	1-11-05
SCALE	AS NOTED
JOB NO.	103-418

SHEET GP-1 OF 1 SHEETS 6

[One Inch on Original Sheet] Drawing File: G:\DATA\103418\Caddwgs\PGP\final plans\ PGP_01 May 10, 2006 - 4:08pm

MAY 11 2006

ORIGINAL

CONSTRUCTION NOTES & QUANTITIES

* PAVEMENT SECTIONS ARE PRELIMINARY; FINAL SECTIONS TO BE DETERMINED AFTER GRADING BY SOILS ENGINEER

CONSTRUCTION NOTES–HARDSCAPE	QUANTITIES
(1A) CONSTRUCT 3.5" AC OVER 7.5" AB PER APPROVED SOILS REPORT* (DRIVE)	
(1B) CONSTRUCT 3" AC OVER 4" AB PER APPROVED SOILS REPORT* (PARK)	
(2A) CONSTRUCT 6" TYPE I C&G PER CITY OF RIVERSIDE STD. DWG. NO. 200	
(2B) CONSTRUCT 6" TYPE II CURB PER CITY OF RIVERSIDE STD. DWG. NO. 200	
(3) CONSTRUCT PPC SIDEWALK PER CONSTRUCTION PLANS	
(3A) CONSTRUCT 6" PCC PAVING (FOR BASKETBALL/TENNIS COURTS)	
(4) CONSTRUCT COMMERCIAL DWY PER CITY OF RIVERSIDE STD DWG. NO. 302	
(5) CONSTRUCT COMMERCIAL TRASH ENCLOSURE PER ARCHITECTURAL PLANS	
(6) CONSTRUCT CROSS GUTTER PER CITY OF RIVERSIDE STD. DWG. NO. 220	
(7) CONSTRUCT RETAINING WALL PER DETAIL ON SHEET 2	
(8) CONSTRUCT RETAINING WALL PER LANDSCAPE ARCHITECT DETAIL FOR BALL FIELD DUG-OUTS	
(9) CONSTRUCT "U" SHAPED CHANNEL PER DETAIL ON SHEET 2	
(10) SAWCUT AND JOIN EXISTING AC PAVEMENT	
CONSTRUCTION NOTES – DRAINAGE	
(20) CONSTRUCT 4" ADS N-12 PIPE OR APR'D EQUAL	
(20A) CONSTRUCT 8" ADS N-12 PIPE OR APR'D EQUAL	
(20B) CONSTRUCT 10" ADS N-12 PIPE OR APR'D EQUAL	
(20C) CONSTRUCT 12" ADS N-12 PIPE OR APR'D EQUAL	
(20D) CONSTRUCT 18" ADS N-12 PIPE OR APPROVED EQUAL	
(21) CONCRETE COLLAR PER CITY OF RIVERSIDE STD. 424	
(22) CONSTRUCT CURB DRAIN PER APWA STD. DWG. 150-2, WITH 4" PVC PIPE	
(23) INSTALL STORM DRAIN CLEANOUT PER DETAIL ON SHEET 2	
(24) CONSTRUCT 2424 SERIES PRECAST CATCH BASIN W/TRAFFIC BOLT DOWN GRATE & CAST-IN-PLACE BASE PER DETAIL ON SHEET 2	
(24A) CONSTRUCT 1212 SERIES PRECAST CATCH BASIN W/TRAFFIC BOLT DOWN GRATE & CAST-IN-PLACE BASE PER DETAIL ON SHEET 2	
(25) INSTALL FLO-GARD PLUS CB FILTER INSERT OR APPROVED EQUAL MODEL FGP-24F (FOR 2424 CB)	
(26) CONSTRUCT 8" NYLOPLAST DRAIN BASIN W/ STANDARD LIGHT DUTY GRATE OR APR'D EQUAL	

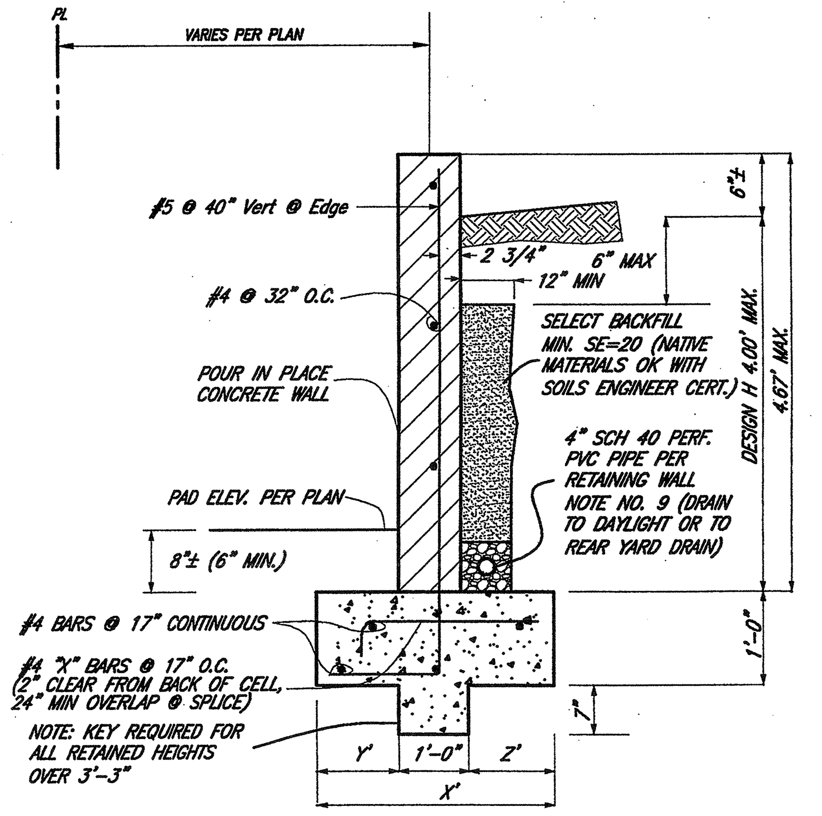

(7) DECORATIVE RETAINING WALL DETAIL

NOT TO SCALE

TABLE FOR CONSTRUCTION NOTE NO. 7 ONLY

RETAINED HEIGHT	FOOTING DESIGN X'	FOOTING DESIGN Y'	FOOTING DESIGN Z'	KEY REQ'D	DEVELOPMENT LENGTHS STEM	DEVELOPMENT LENGTHS FOOTING	"D" – REBAR DEPTH
H≤TO 3.3'	2'-4"	4"	2'-0"	NO	25"	6"	5.25"
3.3'<H<4.67'	3'-1"	4"	1'-9"	YES	25"	8.34"	5.25"

SAME STEEL REQUIREMENTS BOTH WALLS

RETAINING WALL NOTES:

1. SOIL BEARING VALUE USED IN DESIGN IS 2,500 PSF. BOTTOM OF FOOTING SHALL BE AT LEAST 20" BELOW LOWEST ADJACENT SOIL ON 90% COMPACTED FILL.
2. CONCRETE IN FOOTING TO TEST 2000 LBS. PER SQ. IN. @ 28 DAYS
3. CONCRETE BLOCK: 8" OR 12" C.M.U. (1-SIDED SPLIT FACE) GRADE "N", MEDIUM WEIGHT UNITS CONFORMING TO ASTM C-90. AS SHOWN.
4. REINFORCING STEEL SHALL BE ASTM A615, GRADE 60
5. GROUT: 1 PART CEMENT, 3 PARTS SAND, 2 PARTS PEA GRAVEL MORTAR: 2 PART CEMENT, 1 PART LIME PUTTY, 9 PARTS SAND
6. 3" CLEARANCE REQUIRED BETWEEN REBAR AND EARTH
7. ALL HORIZONTAL AND VERTICAL STEEL SHALL BE CONTINUOUS OR HAVE A MINIMUM 24" LAP SPLICE.
8. GROUT ALL CELLS
9. RETAINING PORTION TO BE WATERPROOFED, INSTALL SCH. 40 P.V.C. W/ PERFORATIONS DOWN @ S=1% W/ 1.5 C.F. OF 1/2" PEA GRAVEL WRAPPED W/ FILTER FABRIC (MIRAFI 140N OR EQUIVALENT). BACKFILL ABOVE WALL SUBDRAIN SHALL BE SELECT BACKFILL WITH A MIN S.E. OF 20. (NATIVE MATERIALS MEETING REQUIREMENT ARE O.K. WITH SOILS ENGINEER CERTIFICATION)
10. ALL FOOTINGS ARE TO BE PLACED AGAINST UNDISTURBED EARTH.

RETAINING WALL NOTES CONT.

11. WALLS SHALL NOT OBSTRUCT OR CONCENTRATE LOT DRAINAGE.
12. MAXIMUM STRESSES: FS=20,000 PSI, f'm=1,500 psi
    PASSIVE PRESSURE = 250 PSF
    COEFFICIENT FRICTION=0.35
13. ALL BLOCK WALLS SHALL BE SPLIT FACE, SLUMPSTONE, OR OTHER DECORATIVE MATERIAL APPROVED BY PALLING DEPARTMENT.
14. PLEASE REFER TO THE SOILS REPORT FOR MINIMUM EMBEDMENT LENGTH AND SOIL BEARING VALUES.

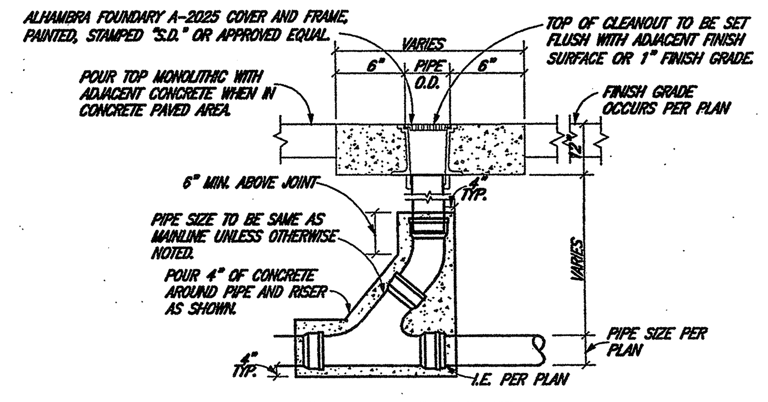

STORM DRAIN CLEANOUT (23)

N.T.S.
REQUIRED AT ALL ANGLE POINTS

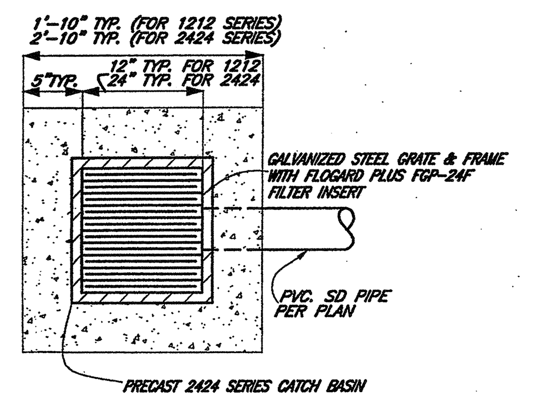

PLAN VIEW

NTS

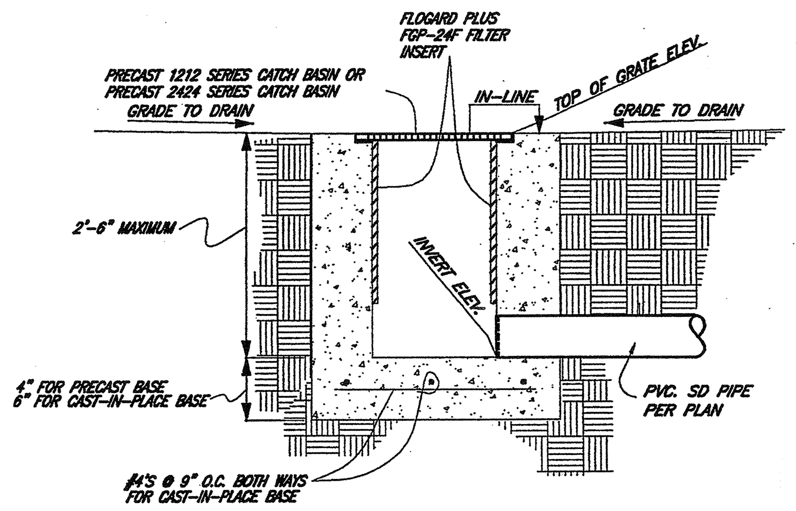

SECTION FOR CATCH BASIN DEPTH 2'-6" AND LESS (24)(24A)

NTS

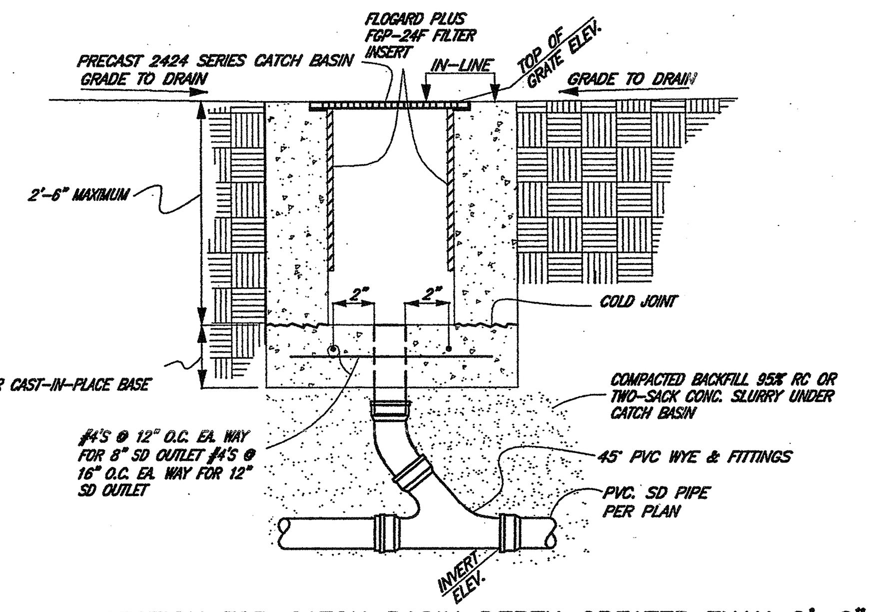

SECTION FOR CATCH BASIN DEPTH GREATER THAN 2'-6" (24)(24A)

SCALE: NOT TO SCALE

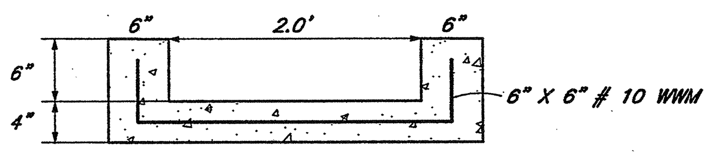

"U" SHAPED CHANNEL DETAIL (9)

N.T.S.

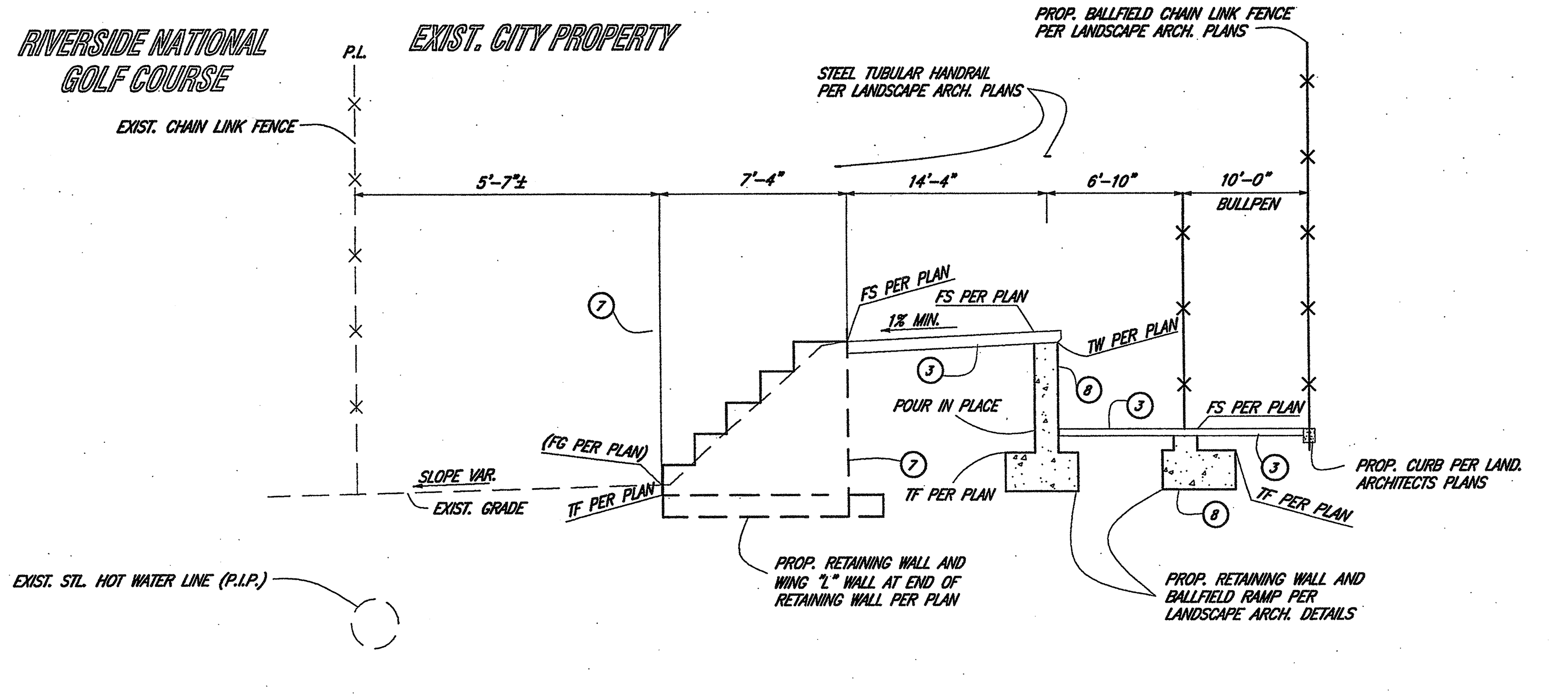

SECTION A–A

N.T.S.

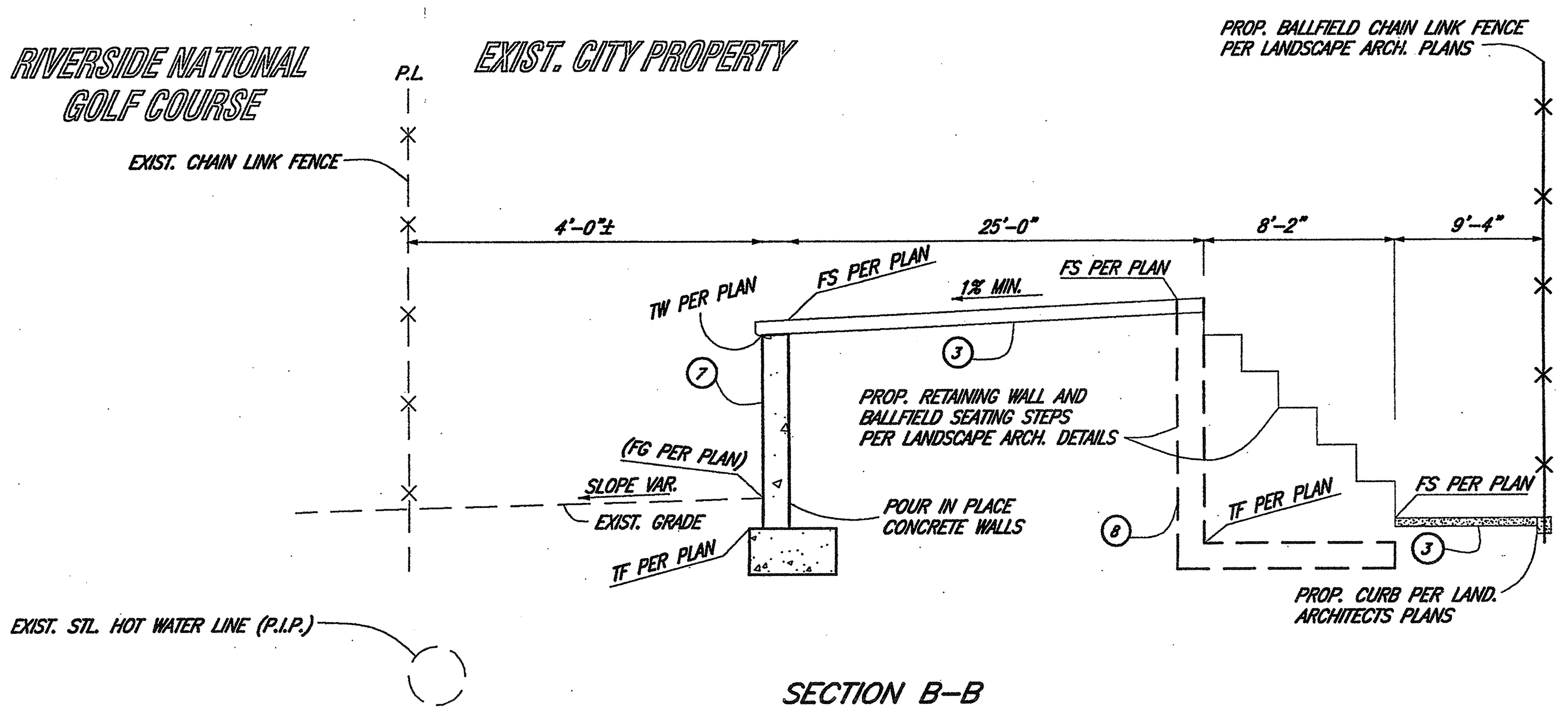

SECTION B–B

N.T.S.

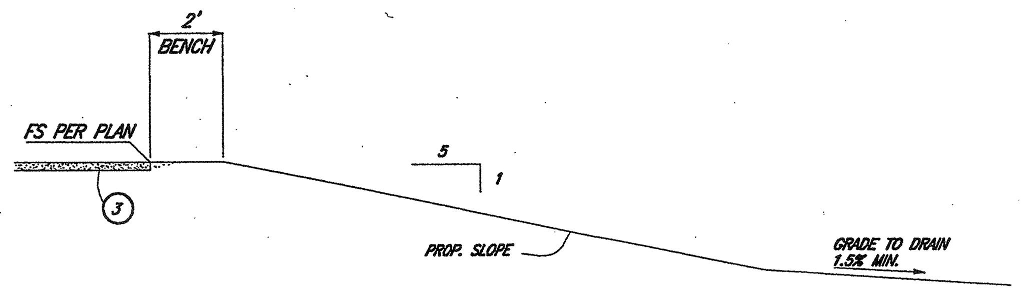

SECTION C–C

N.T.S.

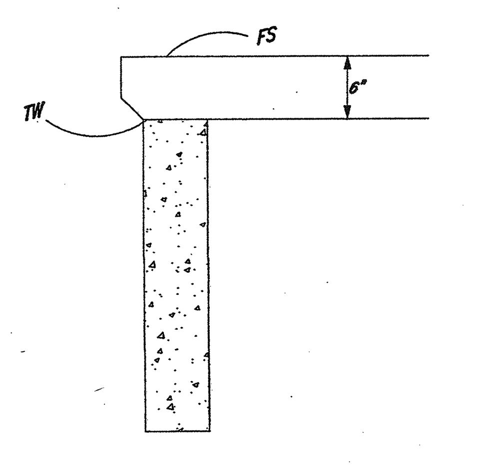

PAVING TO WALL CONNECTION DETAIL

CONSTRUCTION SET 7-20-06 (Replace the 4/18/06 set) except Add tree well drains & pipes on GP-6 per 4/18/06 set.

REGISTERED PROFESSIONAL ENGINEER WILLIAM D. BROOKS No. 53114 Exp. 6-30-07 CIVIL STATE OF CALIFORNIA

RECEIVED MAY 12 2006 DEPT. OF PUBLIC WORKS

PLANNING DEPARTMENT	
APPROVED BY	DATE 5/11/06

WDID # 833M000135	PW05-0147

RHA LANDSCAPE ARCHITECTS PLANNERS INC.
3612 MISSION INN AVE
RIVERSIDE, CALIFORNIA 92501
LIC. #1512
PH. (951) 781-1930
FAX (951) 686-8091

© R H A Landscape Architects –Planners, Inc. expressly reserves its common law copyright and other property rights in these plans. These plans are not to be reproduced, changed or copied in any form or manner whatsoever nor are they to be assigned to any third party without first obtaining the express written permission.

CLIENT: THE CITY OF RIVERSIDE
PARK AND RECREATION DEPT.
3900 Main Street
Riverside, California 92522

PROJECT: Reid Park Expansion
Community Park
Orange St. and Garner Rd.

REVISIONS	DATE	BY

LICENSED LANDSCAPE ARCHITECT RANDOLPH HLUBIK NO. 1512 Signature 7/31/05 Renewal Date Date STATE OF CALIFORNIA

SHEET TITLE: MISC. SECTIONS & DETAILS

DESIGNED	WDB
DRAWN	SJN
CHECKED	DGA
DATE	1-11-05
SCALE	AS NOTED
JOB NO.	103-418

SHEET GP-2 OF 2 SHEETS 6

[One Inch on Original Sheet] Drawing File: G:\DATA\103\418\Caddwgs\PGP\final plans\ PGP_02 May 10, 2006 - 4:05pm

MAY 11 2006

ORIGINAL

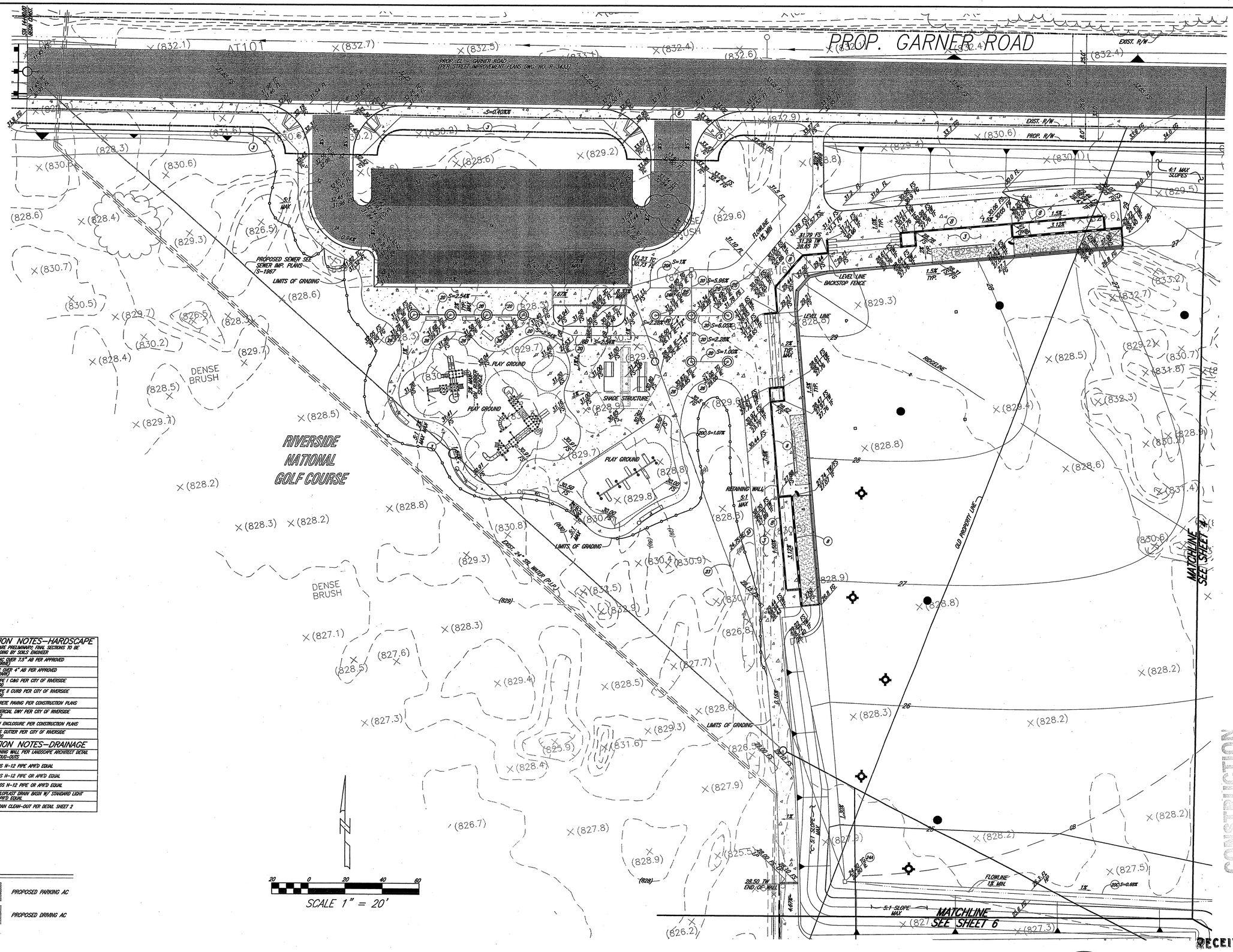

CONSTRUCTION NOTES—HARDSCAPE

* PAVEMENT SECTIONS ARE PRELIMINARY. FINAL SECTIONS TO BE DETERMINED AFTER GRADING BY SOILS ENGINEER

(1A)	CONSTRUCT 3.5" AC OVER 7.5" AB PER APPROVED SOILS REPORT* (DRIVE)
(1B)	CONSTRUCT 3" AC OVER 4" AB PER APPROVED SOILS REPORT* (PARK)
(2A)	CONSTRUCT 6" TYPE I C&G PER CITY OF RIVERSIDE STD. DWG. NO. 200
(2B)	CONSTRUCT 6" TYPE II CURB PER CITY OF RIVERSIDE STD. DWG. NO. 200
(3)	CONSTRUCT CONCRETE PAVING PER CONSTRUCTION PLANS
(4)	CONSTRUCT COMMERCIAL DWY PER CITY OF RIVERSIDE STD DWG. NO. 302
(5)	CONSTRUCT TRASH ENCLOSURE PER CONSTRUCTION PLANS
(6)	CONSTRUCT CROSS GUTTER PER CITY OF RIVERSIDE STD. DWG. NO. 220

CONSTRUCTION NOTES—DRAINAGE

(8)	CONSTRUCT RETAINING WALL PER LANDSCAPE ARCHITECT DETAIL FOR BALL FIELD DUG-OUTS
(20)	CONSTRUCT 4" ADS N-12 PIPE APP'D EQUAL
(20)	CONSTRUCT 6" ADS N-12 PIPE OR APP'D EQUAL
(20)	CONSTRUCT 12" ADS N-12 PIPE OR APP'D EQUAL
(29)	CONSTRUCT 9" NYLOPLAST DRAIN BASIN W/ STANDARD LIGHT DUTY GRATE OR APP'D EQUAL
(30)	INSTALL STORM DRAIN CLEAN-OUT PER DETAIL SHEET 2

LEGEND

PROPOSED PARKING AC

PROPOSED DRIVING AC

RECEIVED
MAY 12 2006
DEPT. OF PUBLIC WORKS

REGISTERED PROFESSIONAL ENGINEER WILLIAM D. BROOKS No. 53114 Exp. 6/30/07 CIVIL STATE OF CALIFORNIA

WDID # 833W000135 | PW05-0147

PLANNING DEPARTMENT
APPROVED BY 5/11/06 DATE

MAY 11 2006

ORIGINAL

RHA LANDSCAPE ARCHITECTS PLANNERS, INC.
3612 MISSION INN AVE
RIVERSIDE, CALIFORNIA 92501
LIC. #1512
PH. (951) 781-1930
FAX (951) 686-8091

© R.H.A. Landscape Architects - Planners, Inc. expressly reserves its common law copyright and other property rights to these plans, esspecial to any field copy, without first obtaining the express written permission. These plans are not to be reproduced, changed or copied in any form or manner whatsoever, nor are they to be

CLIENT:
THE CITY OF RIVERSIDE
PARK AND RECREATION DEPT.
3900 Main Street
Riverside, California 92522

PROJECT:
Reid Park Expansion
Community Park
Orange St. and Garner Rd.

REVISIONS	DATE	BY

LICENSED LANDSCAPE ARCHITECT
CHRISTOPHER HUBBITT No. 2507
Signature
7/31/06
Renewal Date
Date
STATE OF CALIFORNIA

SHEET TITLE
PRECISE GRADING PLAN

DESIGNED	WDB
DRAWN	SJN
CHECKED	DGA
DATE	1-11-05
SCALE	AS NOTED
JOB NO.	103-418

SHEET
GP-3
OF 3 SHEETS 6

(One Inch on Original Sheet) Drawing File: G:\DATA\103\418\Cad\dwg\PGP\final plans\ PGP_03 May 10, 2006 - 4:33pm

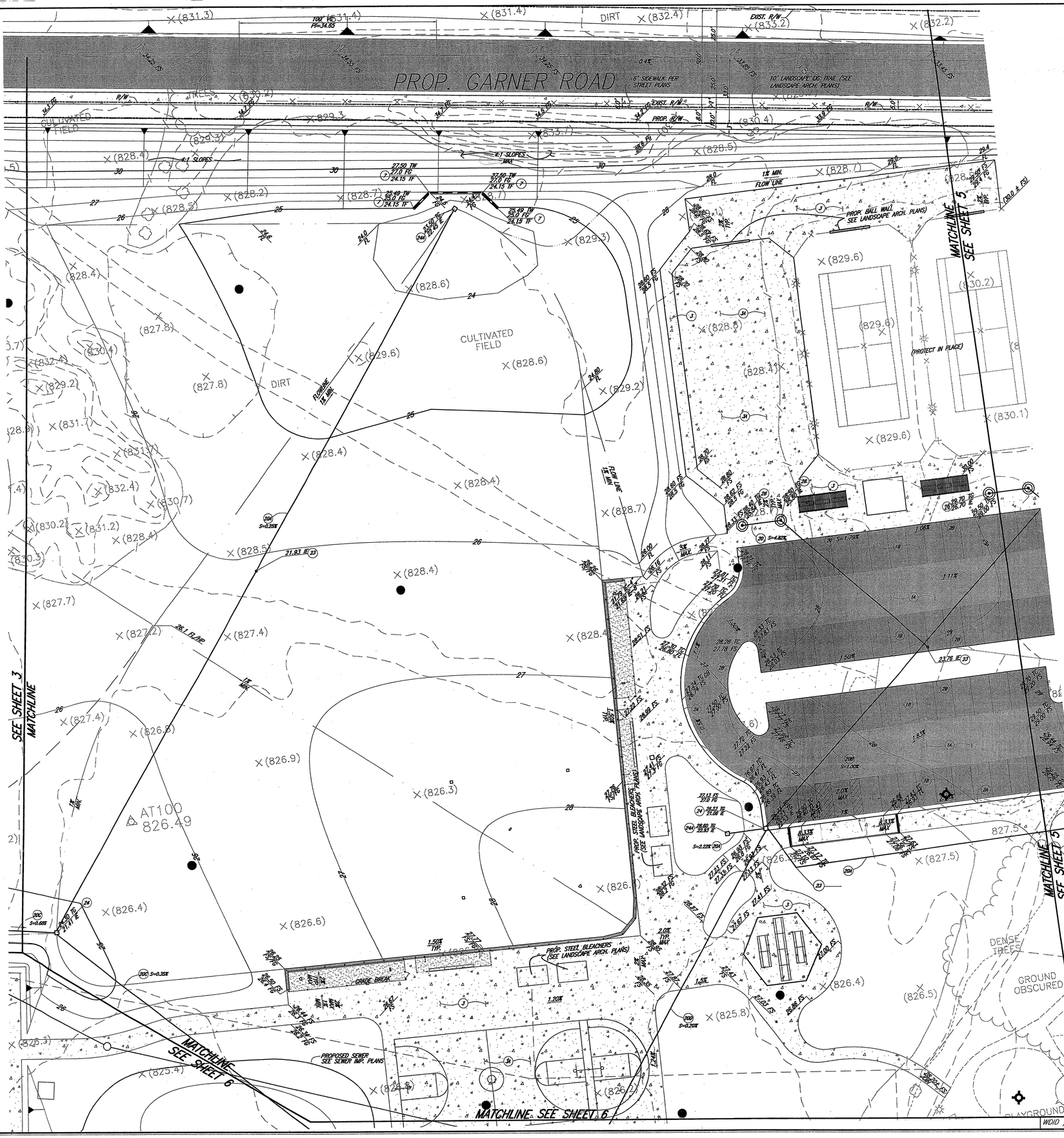

CONSTRUCTION NOTES—HARDSCAPE

* PAVEMENT SECTIONS ARE PRELIMINARY; FINAL SECTIONS TO BE DETERMINED AFTER GRADING BY SOILS ENGINEER

14	CONSTRUCT 3.5" AC OVER 7.5" AB PER APPROVED SOILS REPORT* (DRIVE)
18	CONSTRUCT 3" AC OVER 4" AB PER APPROVED SOILS REPORT* (PARK)
24	CONSTRUCT 6" TYPE I C&G PER CITY OF RIVERSIDE STD. DWG. NO. 200
28	CONSTRUCT 6" TYPE II CURB PER CITY OF RIVERSIDE STD. DWG. NO. 200
3	CONSTRUCT PPC SIDEWALK PER CONSTRUCTION PLANS
30	CONSTRUCT 6" PCC PAVING (FOR BASKETBALL/TENNIS COURTS)
4	CONSTRUCT COMMERCIAL DWY PER CITY OF RIVERSIDE STD DWG. NO. 403
5	CONSTRUCT COMMERCIAL TRASH ENCLOSURE PER ARCHITECTURAL PLANS
6	CONSTRUCT CROSS GUTTER PER CITY OF RIVERSIDE STD. DWG. NO. 220

CONSTRUCTION NOTES – DRAINAGE

7	CONSTRUCT RETAINING WALL PER DETAIL ON SHEET 2
20	CONSTRUCT 4" ADS N-12 PIPE APR'D EQUAL
20A	CONSTRUCT 8" ADS N-12 PIPE OR APR'D EQUAL
20B	CONSTRUCT 10" ADS N-12 PIPE OR APR'D EQUAL
20C	CONSTRUCT 12" ADS N-12 PIPE OR APR'D EQUAL
20D	CONSTRUCT 18" ADS N-12 PIPE OR APPROVED EQUAL
21	CONCRETE COLLAR PER CITY OF RIVERSIDE STD. 424
22	CONSTRUCT CURB DRAIN PER APWA STD. DWG. 150-2, 1 4" PVC PIPE
23	INSTALL STORM DRAIN CLEANOUT PER DETAIL ON SHEET 2
24	CONSTRUCT 3424 SERIES PRECAST CATCH BASIN W/TRAFFIC BOLT DOWN GRATE & CASTI-IN-PLACE BASE PER DETAIL ON SHEET 2
24A	CONSTRUCT 1312 SERIES PRECAST CATCH BASIN W/TRAFFIC BOLT DOWN GRATE & CASTI-IN-PLACE BASE PER DETAIL ON SHEET 2
29	INSTALL FLO-GARD PLUS CB FILTER INSERT OR APPROVED EQUAL MODEL FGP-24 (FOR 2424 CB)
26	CONSTRUCT 8" HILOPLAST DRAIN BASIN W/ STANDARD LIGHT DUTY GRATE OR APR'D EQUAL

LEGEND

PROPOSED PARKING AC

PROPOSED DRIVING AC

SCALE 1" = 20'

CONSTRUCTION SET 7-20-06 (Replace the 4/8/06 set)

RECEIVED MAY 12 2006 DEPT. OF PUBLIC WORKS

PLANNING DEPARTMENT APPROVED BY 5/11/06 DATE

WDID # 833M000135 | PW05-0147

R H A LANDSCAPE ARCHITECTS PLANNERS INC.
3612 MISSION INN AVE
RIVERSIDE, CALIFORNIA 92501
LIC. #1512
PH. (951) 781-1930
FAX (951) 686-8091

© R H A Landscape Architects - Planners, Inc. expressly reserves its common law copyright and other property rights in these plans, assigned to any third party without first obtaining its express written permission. These plans are not to be reproduced, changed or copied in any form or manner, whatsoever nor are they to be assigned to any third party.

CLIENT:
THE CITY OF RIVERSIDE
PARK AND RECREATION DEPT.
3900 Main Street
Riverside, California 92522

PROJECT:
Reid Park Expansion
Community Park
Orange St. and Garner Rd.

REVISIONS	DATE	BY

LICENSED LANDSCAPE ARCHITECT — RICHARD HUNTER ZEMKE — Signature, Typed Rendered Date — Date — STATE OF CALIFORNIA

REGISTERED PROFESSIONAL ENGINEER — WILLIAM D. BROOKS — No. 53114 — Exp. 6-30-07 — CIVIL — STATE OF CALIFORNIA

SHEET TITLE
PRECISE GRADING PLAN

DESIGNED	WDB
DRAWN	SJN
CHECKED	DGA
DATE	1-11-05
SCALE	AS NOTED
JOB NO.	103-418

SHEET GP-4 OF 4 SHEETS 6

[One Inch on Original Sheet] Drawing File: G:\DATA\103418\Backbone\PGP\Reid (latest) PGP.dwg May 10, 2006 - 4:53pm

MAY 11 2006

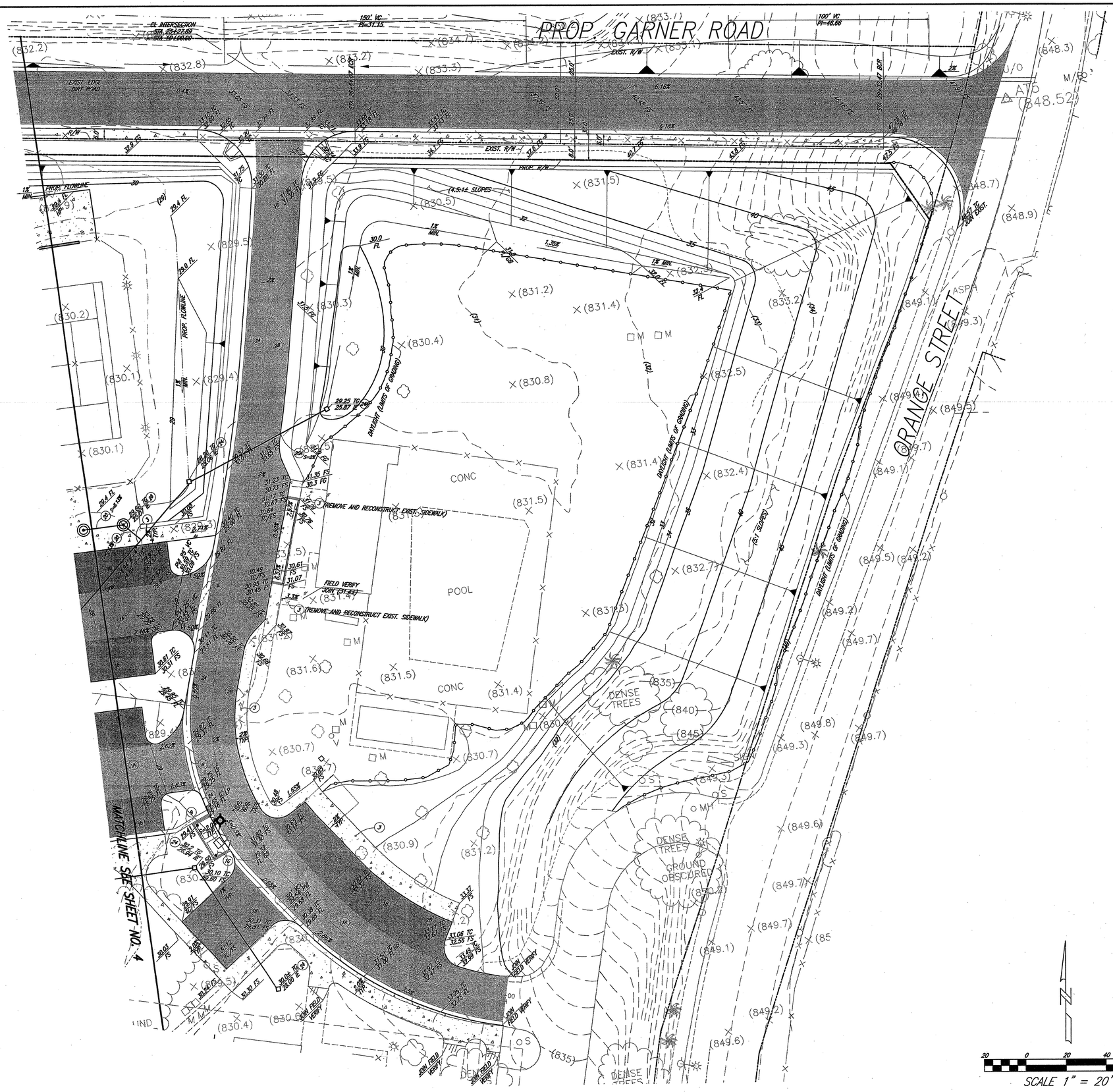

CONSTRUCTION NOTES–HARDSCAPE

* PAVEMENT SECTIONS ARE PRELIMINARY, FINAL SECTIONS TO BE DETERMINED AFTER GRADING BY SOILS ENGINEER

14	CONSTRUCT 3.5" AC OVER 7.5" AB PER APPROVED SOILS REPORT* (DRIVE)
12	CONSTRUCT 3" AC OVER 4" AB PER APPROVED SOILS REPORT* (PARKING)
10	CONSTRUCT 6" PCC OVER 5" AB PER APPROVED SOILS REPORT* (TRUCK LOADING)
3A	CONSTRUCT 6" TYPE I C&G PER CITY OF RIVERSIDE STD. DWG. NO. 200
3B	CONSTRUCT 6" TYPE II CURB PER CITY OF RIVERSIDE STD. DWG. NO. 200
3	CONSTRUCT 4" PPC PAVEMENT PER CONSTRUCTION PLANS
4	CONSTRUCT COMMERCIAL DWY PER CITY OF RIVERSIDE STD. DWG. NO. 322
5	CONSTRUCT TRASH ENCLOSURE PER CONSTRUCTION PLANS
6	CONSTRUCT CROSS GUTTER PER CITY OF RIVERSIDE STD. DWG. NO. 220
9	CONSTRUCT "U" SHAPED CHANNEL PER DETAIL ON SHEET 2
10	SAWCUT AND JOIN EXISTING AC PAVEMENT

CONSTRUCTION NOTES – DRAINAGE

20	CONSTRUCT 4" ADS N-12 PIPE APW'D EQUAL
20A	CONSTRUCT 8" ADS N-12 PIPE OR APW'D EQUAL
20B	CONSTRUCT 10" ADS N-12 PIPE OR APW'D EQUAL
23	INSTALL STORM DRAIN CLEANOUT PER DETAIL ON SHEET 2
24A	CONSTRUCT 1212 SERIES PRECAST CATCH BASIN W/ TRAFFIC BOLT DOWN GRATE & CAST-IN-PLACE BASE PER DETAIL ON SHEET 2
24B	CONSTRUCT 8' INTERCEPTOR DRAIN BASIN W/ STANDARD LIGHT DUTY GRATE OR APW'D EQUAL

LEGEND

PROPOSED DRIVING AC

PROPOSED PARKING AC

SCALE 1" = 20'

RECEIVED
MAY 12 2006
DEPT. OF PUBLIC WORKS

PLANNING DEPARTMENT
APPROVED 5/11/06 DATE

WDID # 833XXXX | PW05-0147

RHA LANDSCAPE ARCHITECTS PLANNERS, INC.
3612 MISSION INN AVE
RIVERSIDE, CALIFORNIA
92501
LIC. #1512
PH. (951) 781-1930
FAX (951) 686-8091

© R.H.A. Landscape Architects –Planners, Inc. expressly reserves its common law copyright and other property rights in these plans, assigned to any third party without first obtaining the express written permission. These plans are not to be reproduced, changed or copied in any form or manner, whatsoever nor are they to be assigned to any third party without first obtaining the express written permission of R.H.A. Landscape Architects-Planners, Inc.

CLIENT:
THE CITY OF RIVERSIDE
PARK AND RECREATION DEPT.
3900 Main Street
Riverside, California 92522

PROJECT:
Reid Park Expansion
Community Park
Orange St. and Garner Rd.

REVISIONS	DATE	BY

LICENSED LANDSCAPE ARCHITECT
WILLIAM DAVID BOYD No. 2497
Signature
3/26/06
Renewal Date
Date
STATE OF CALIFORNIA

SHEET TITLE
PRECISE GRADING PLAN

DESIGNED	WDB
DRAWN	SJN
CHECKED	DGA
DATE	1-11-05
SCALE	AS NOTED
JOB NO.	103-418

SHEET GP-5 OF 5 SHEETS 6

[One Inch on Original Sheet] Drawing File: G:\RAT\A103\418\Cadbase\PGP\final plans PGP_05 May 10, 2006 - 4:43pm

MAY 11 2006

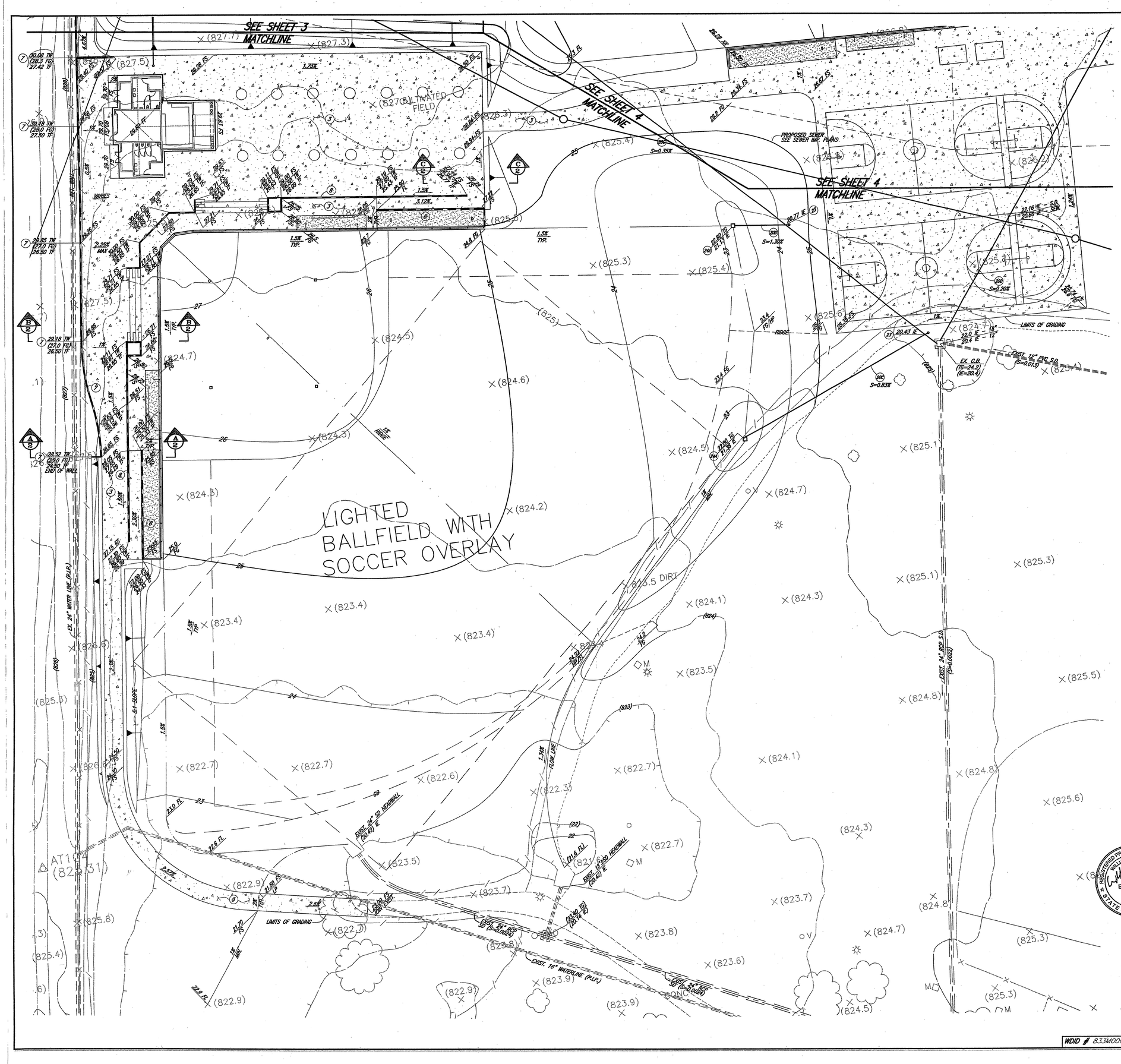

CONSTRUCTION NOTES–HARDSCAPE

* PAVEMENT SECTIONS ARE PRELIMINARY; FINAL SECTIONS TO BE DETERMINED AFTER GRADING BY SOILS ENGINEER

1A	CONSTRUCT 3.5" AC OVER 7.5" AB PER APPROVED SOILS REPORT (DRIVE)
1B	CONSTRUCT 3" AC OVER 4" AB PER APPROVED SOILS REPORT (PARK)
2A	CONSTRUCT 6" TYPE 1 CBG PER CITY OF RIVERSIDE STD. DWG. NO. 200
2B	CONSTRUCT 6" TYPE II CURB PER CITY OF RIVERSIDE STD. DWG. NO. 200
3	CONSTRUCT PPC SIDEWALK PER CONSTRUCTION PLANS
4	CONSTRUCT COMMERCIAL DWY PER CITY OF RIVERSIDE STD. DWG. NO. 302
5	CONSTRUCT TRASH ENCLOSURE PER CONSTRUCTION PLANS
6	CONSTRUCT CROSS GUTTER PER CITY OF RIVERSIDE STD. DWG. NO. 230
7	CONSTRUCT RETAINING WALL PER DETAIL ON SHEET 2
8	CONSTRUCT RETAINING WALL PER CONSTRUCTION PLANS

CONSTRUCTION NOTES – DRAINAGE

20A	CONSTRUCT 8" ADS N-12 PIPE OR APWD EQUAL
20B	CONSTRUCT 10" ADS N-12 PIPE OR APWD EQUAL
20C	CONSTRUCT 12" ADS N-12 PIPE OR APWD EQUAL
20D	CONSTRUCT 18" ADS N-12 PIPE OR APPROVED EQUAL
21	CONCRETE COLLAR PER CITY OF RIVERSIDE STD. 424
22	CONSTRUCT CURB DRAIN PER APWA STD. DWG. 150-2, 1 4" PVC PIPE
23	INSTALL STORM DRAIN CLEANOUT PER DETAIL ON SHEET 2
24	CONSTRUCT 2424 SERIES PRECAST CATCH BASIN W/TRAFFIC BOLT DOWN GRATE & CAST-IN-PLACE BASE PER DETAIL ON SHEET 2
24A	CONSTRUCT 1212 SERIES PRECAST CATCH BASIN W/TRAFFIC BOLT DOWN GRATE & CAST-IN-PLACE BASE PER DETAIL ON SHEET 2
25	INSTALL FLO-GARD PLUS CB FILTER INSERT OR APPROVED EQUAL MODEL FGP-24F (FOR 2424 CB)

LEGEND

PROPOSED DRIVING AC

PROPOSED PARKING AC

SCALE 1" = 20'

20 0 20 40 60

REGISTERED PROFESSIONAL ENGINEER WILLIAM D. BROWN No. 65314 Exp. 6-30-07 CIVIL STATE OF CALIFORNIA

CONSTRUCTION SET 7-20-06 (Replace the 4/4/06 set) except add tree well drains & P.Pipes on GP-6 per this set issued on 4/6/06.

RECEIVED
MAY 12 2006
DEPT. OF PUBLIC WORKS

PLANNING DEPARTMENT
APPROVED BY DATE 5/11/06

WDID # 833M000135 | PW05-0144

RHA LANDSCAPE ARCHITECTS PLANNERS INC.
3612 MISSION INN AVE
RIVERSIDE, CALIFORNIA 92501
LIC. #1512
PH. (951) 781-1930
FAX (951) 686-8091

© R.H.A. Landscape Architects - Planners, Inc. expressly reserves its common law copyright and other property rights in these plans, assigned to any third party without the express written permission of R.H.A. Landscape Architects - Planners, Inc. These plans are not to be reproduced, copied or used in any form or manner.

CLIENT:
THE CITY OF RIVERSIDE
PARK AND RECREATION DEPT.
3900 Main Street
Riverside, California 92522

PROJECT:
Reid Park Expansion
Community Park
Orange St. and Garner Rd.

REVISIONS	DATE	BY

LICENSED LANDSCAPE ARCHITECT DAVID H. HUBITZ No. 2497 Signature 7/31/06 Renewal Date Date STATE OF CALIFORNIA

SHEET TITLE
PRECISE GRADING PLAN

DESIGNED	WDB
DRAWN	SJN
CHECKED	DGA
DATE	1-11-05
SCALE	AS NOTED
JOB NO.	103-418

SHEET GP-6 OF 6 SHEETS 6

[One Inch on Original Sheet] Drawing File: G:\DATA\103\418\Cadfiles\PGP\Reid.dwg PGP_08 May 10, 2006 - 4:46pm

MAY 11 2006

STREET IMPROVEMENT PLAN
GARNER ROAD – "REID PARK"

GENERAL NOTES:

1. NO PERSON SHALL PERFORM ANY CONSTRUCTION ACTIVITY OR INSTALL ANY OBJECTS WITHIN THE PUBLIC RIGHTS-OF-WAY OR EASEMENTS OF THE CITY OF RIVERSIDE WITHOUT A VALID CONSTRUCTION PERMIT OR, A STREET OPENING PERMIT OR AN ENCROACHMENT PERMIT ISSUED BY THE CITY'S PUBLIC WORKS DEPARTMENT.
2. IT SHALL BE THE RESPONSIBILITY OF THE CONTRACTOR TO CLEAR THE RIGHT OF WAY IN ACCORDANCE WITH THE PROVISIONS OF LAW AS IT AFFECTS EACH UTILITY INCLUDING IRRIGATION LINES AND APPURTENANCES AND AT NO COST TO THE CITY.
3. CONSTRUCTION SHALL BE IN ACCORDANCE WITH THE CITY OF RIVERSIDE DEPARTMENT OF PUBLIC WORKS, STANDARD DRAWINGS, ITS SUPPLEMENTAL NOTES AND THE STANDARD SPECIFICATIONS FOR PUBLIC WORKS CONSTRUCTION, CURRENT EDITION.
4. THE PRIVATE ENGINEER SIGNING THESE PLANS IS RESPONSIBLE FOR ASSURING THE ACCURACY AND ACCEPTABILITY OF THE WORK HEREON. IN THE EVENT OF DISCREPANCIES ARISING DURING CONSTRUCTION, THE PRIVATE ENGINEER SHALL BE RESPONSIBLE FOR DETERMINING AN ACCEPTABLE SOLUTION AND REVISING THE PLANS FOR APPROVAL BY THE CITY.
5. QUANTITIES SHOWN ARE FOR INFORMATION ONLY AND THE CITY OF RIVERSIDE IS NOT RESPONSIBLE FOR THEIR ACCURACY.
6. THE DEVELOPER SHALL BE RESPONSIBLE FOR PRESERVING OR RE-ESTABLISHING AND REFERENCING SURVEY MONUMENTS DESTROYED, DISTURBED OR BURIED AS A RESULT OF CONSTRUCTION SHOWN HEREON.
7. SEE "STREET LIGHTING PLANS" FOR QUANTITY AND LOCATION OF REQUIRED STREET LIGHTS.
8. ALL FLAGGED ELEVATIONS SHALL BE STAKED IN THE FIELD BY THE PRIVATE ENGINEER.
9. WHERE NEW PAVEMENT IS TO JOIN THE EXISTING PAVEMENT, THE EDGE OF THE EXISTING PAVEMENT SHALL BE TRIMMED IN A SMOOTH AND STRAIGHT LINE. CONSTRUCT MATCH-UP PAVING AS SHOWN ON THE PLANS AND OVERLAY PAVING AS DIRECTED IN THE FIELD TO PRODUCE A SMOOTH SECTION.
10. CONSTRUCT DRIVEWAY APPROACHES PER STANDARD DRAWING 302. EXACT SIZE AND LOCATION TO BE STAKED BY THE PRIVATE ENGINEER PRIOR TO CONSTRUCTION OF THE CURB AND GUTTER.
11. STREET OPENING PERMIT FOR CONSTRUCTION AND /OR MODIFICATION OF TRAFFIC SIGNAL FACILITIES IS REQUIRED.
12. ALL TRAFFIC SIGNS SHALL BE INSTALLED PRIOR TO OPENING THE STREETS TO TRAFFIC.
13. ~~SEE TRAFFIC SIGNAL PLAN X-261 FOR TRAFFIC SIGNAL FACILITIES AND STRIPING.~~
14. ANY TRAFFIC CONTROL STRIPING OBLITERED AND/OR BADLY WORN DURING CONSTRUCTION SHALL BE RESTORED BY THE CONTRACTOR WITHIN FIVE DAYS AFTER NOTIFICATION FROM THE CITY INSPECTORS.
15. STREET IMPROVEMENT WORK THAT WILL CAUSE DAMAGE TO THE DETECTOR LOOP(S) SHALL NOT BE PERFORMED UNTIL TRAFFIC SIGNAL MAINTENANCE PERSONNEL HAVE BEEN NOTIFIED AND THE NECESSARY TIMING ADJUSTMENTS ARE MADE TO MAINTAIN SIGNAL OPERATION.
16. FINAL STRIPING FOR TRAFFIC CONTROL AND/OR PAVEMENT MARKING TO BE THE RESPONSIBILITY OF THE DEVELOPER.
17. THE CONTRACTOR SHALL CALL IN A LOCATION REQUEST TO UNDERGROUND SERVICE ALERT (USA), PHONE #1-800-227-2600, TWO WORKING DAYS BEFORE DIGGING. NO CONSTRUCTION PERMIT WILL BE ISSUED BY THE PUBLIC WORKS DEPARTMENT INVOLVING EXACAVATION FOR UNDERGROUND FACILITIES UNLESS THE APPLICANT HAS BEEN PROVIDED AN INQUIRY IDENTIFICATION NUMBER BY U.S.A.
18. IN PAVEMENT OVERLAY AREAS, ANY DISTRESSED EXISTING PAVEMENT SHALL BE REMOVED AND REPLACED AS DIRECTED BY THE INSPECTOR PRIOR TO OVERLAYING WITH A.C. PAVING.
19. THE CONTRACTOR SHALL COORDINATE TRENCHING FOR CABLE TELEVISION WITH OTHER TRENCHING WITHIN THE PROJECT.
20. THE CENTERLINE OF GARNER ROAD IS BASED ON RECORD DATA. NO LOCAL FIELD MONUMENTATION WAS LOCATED DURING DESIGN FIELD SURVEY. THE CONTRACTOR PROVIDE FOR A FIELD BOUNDARY SURVEY AND RECORD OF SURVEY AND/OR CORNER RECORD TO SET CENTERLINE MONUMENTATION FOR GARNER ROAD FOR THIS PROJECT.

NOTICE TO CONTRACTORS:

THE EXISTENCE AND LOCATION OF ANY UNDERGROUND UTILITY PIPES, CONDUITS, OR STRUCTURES SHOWN ON THESE PLANS WERE OBTAINED BY A SEARCH OF AVAILABLE RECORDS. TO THE BEST OF OUR KNOWLEDGE, THERE ARE NO EXISTING UTILITIES EXCEPT THOSE SHOWN ON THESE PLANS. THE CONTRACTOR IS REQUIRED TO TAKE PRECAUTIONARY MEASURES TO PROTECT THE UTILITY LINES SHOWN ON THESE DRAWINGS. THE CONTRACTOR FURTHER ASSUMES ALL LIABILITY AND RESPONSIBILITY FOR THE UTILITY PIPES, CONDUITS OR STRUCTURES, SHOWN OR NOT SHOWN ON THESE PLANS.

CONTRACTOR AGREES THAT HE SHALL ASSUME SOLE AND COMPLETE RESPONSIBILITY FOR JOBSITE CONDUITS DURING THE COURSE OF CONSTRUCTION ON THIS PROJECT, INCLUDING SAFETY OF ALL PERSONS OR PROPERTY; THAT THIS REQUIREMENT SHALL APPLY CONTINUOUSLY AND NOT BE LIMITED TO NORMAL WORKING HOURS; THAT THE CONTRACTOR SHALL DEFEND, INDEMNIFY, AND HOLD THE CITY, THE OWNER, AND THE ENGINEER HARMLESS FROM ANY AND ALL LIABILITY, REAL OR ALLEGED, IN CONNECTION WITH THE PERFORMANCE OF WORK ON THIS PROJECT.

THE CONTRATOR SHALL CALL IN A LOCATION REQUEST TO UNDERGROUND SERVICE ALERT (USA) PH. 1-800-227-2600, TWO (2) WORKING DAYS PRIOR TO DIGGING. NO CONSTRUCTION PERMIT ISSUED BY THE PUBLIC WORKS DEPARTMENT SHALL BE VALID INVOLVING UNDERGROUND FACILITIES UNLESS THE APPLICANT HAS AN INQUIRY INDENTIFICATION NUMBER ISSUED BY U.S.A.

CARE SHOULD BE TAKEN TO PREVENT GRADED DITCHES AND SWALES FROM UNDERMINING STREET IMPROVEMENTS. UPON INSPECTION OF THE SITES, THE CITY ENGINEER MAY REQUIRE TEMPORARY GUNITE SWALES, ENTERING OR LEAVING IMPROVEMENTS.

STREET LIGHTS & NOTES:

"OWNER SHALL INSTALL REQUIRED STREET LIGHTS, UNDERGROUND CONDUITS, AND STRUCTURES ON GARNER RD. AS PER CITY OF RIVERSIDE PUBLIC UTILITIES UNDERGROUND SERVICE PLAN. CONTACT VAHID BAZEL WITH P.U. AT (951) 826-5830 TO COORDINATE THE STREET LIGHTS AND UNDERGROUND SERVICE DESIGN."

RIVERSIDE PUBLIC UTILITIES
WATER DIVISION PUW06-0086

MW 7/17/06
APPROVED DATE

OWNER/DEVELOPER

CITY OF RIVERSIDE PARKS & RECREATION DEPARTMENT
3900 MAIN STREET
RIVERSIDE, CA 92522
PH. (909) 826-2021

ENGINEER

ARMSTRONG & BROOKS CONSULTING ENGINEERS
1530 CONSUMER CIRCLE UNIT B
CORONA, CA 92880
PH. (951) 372-8400 FAX (951) 372-8430
CITY OF RIVERSIDE BUS. TAX # 105482 EXPIRES 9/28/2005

ASSESSORS PARCEL NO.

246-060-010

PROPERTY ACREAGE

45.06 AC.

LEGAL DESCRIPTION

PORTION OF LOT O AND LOT R AS SHOWN BY MAP IN BOOK 10 PAGE 004, RECORDS OF RIVERSIDE COUNTY, CALIFORNIA.

SERVICE PROVIDERS

WATER: WESTERN MUNICIPAL WATER DISTRICT
SEWER: CITY OF RIVERSIDE
GAS: SOUTHERN CALIFORNIA GAS CO.
ELECTRICITY: SOUTHERN CALIFORNIA EDISON
TELEPHONE: SBC

ARCHITECT

RHA LANDSCAPE ARCHITECTS & PLANNERS
3612 MISSION INN AVE.
RIVERSIDE, CA 92501
TEL. 951-781-1930
FAX. 951-686-8091

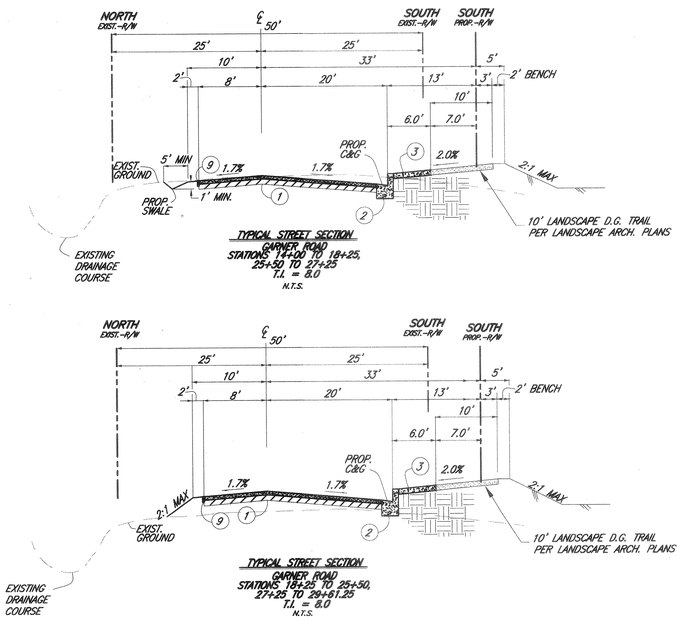

TYPICAL STREET SECTION
GARNER ROAD
STATIONS 11+00 TO 18+25,
25+50 TO 27+25
T.I. = 8.0
N.T.S.

TYPICAL STREET SECTION
GARNER ROAD
STATIONS 18+25 TO 25+50,
27+25 TO 29+81.25
T.I. = 8.0
N.T.S.

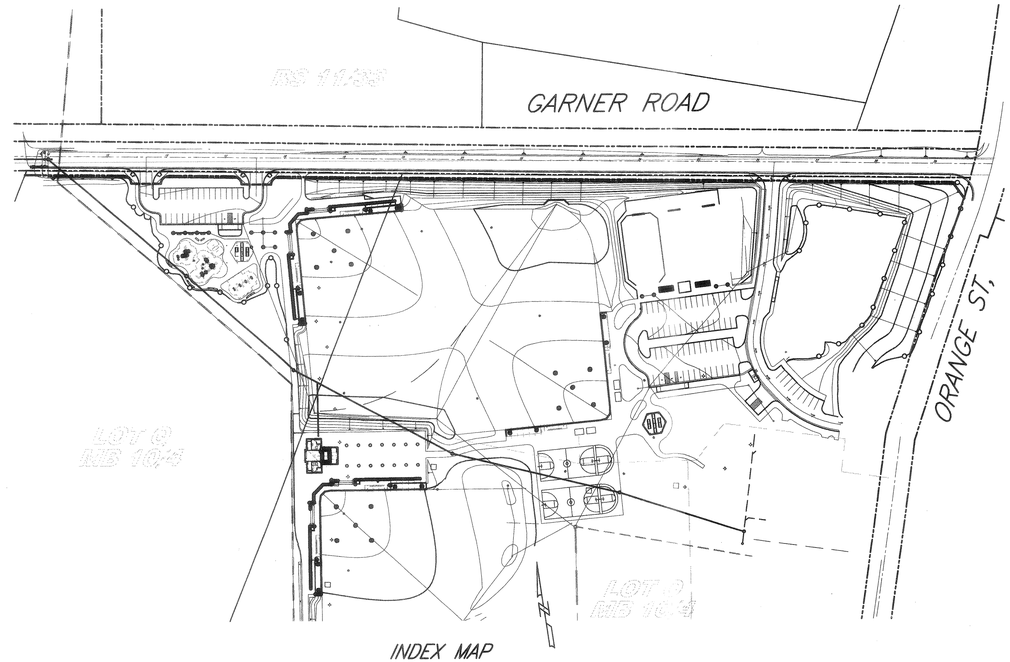

INDEX MAP

SCALE 1" = 120'

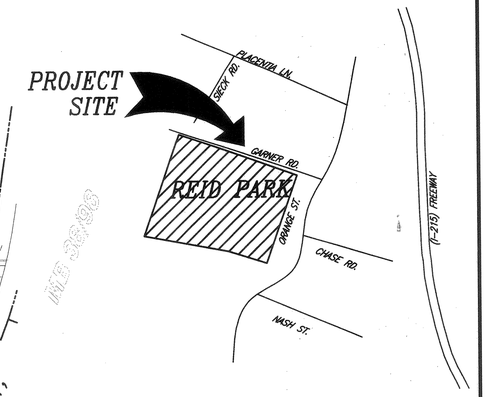

VICINITY MAP
NTS
THOMAS GUIDE MAP
SB/RIVERSIDE COUNTY V. 1999
PG. 646, GRID A-7

SHEET INDEX

1 – TITLE SHEET & GENERAL NOTES
2 – STREET IMPROVEMENT PLAN & PROFILE
3 – STREET IMPROVEMENT PLAN & PROFILE

SOILS ENGINEER CERTIFICATION

CONTRACTOR TO PROVIDE SOILS ENGINEER CERTIFICATION OF ROAD SUBGRADE FOR TI = 8.0, SUBGRADE R-VALUES AND VERIFY PAVEMENT SECTION PER CONSTRUCTION CONTRACT DOCUMENTS. SUBMIT WET SIGNED LETTER TO THE CITY ENGINEER FOR APPROVAL PRIOR TO BASE PAVING.

LEGEND

(590.0)	EXISTING ELEVATION
590.0	PROPOSED FINISH SURFACE ELEVATION
PAD=590.0	PROPOSED PAD ELEVATION
F.F.=590.00	PROPOSED FINISH FLOOR ELEVATION
(SD)	EXISTING STORM DRAIN
(S)	EXISTING SEWER
(W)	EXISTING WATER
(G)	EXISTING GAS
S	PROPOSED SEWER
TC	TOP OF CURB
FL	FLOW LINE
FG	FINISH GRADE
EP	EDGE OF PAVEMENT
R/W	RIGHT-OF-WAY
P/L	PROPERTY LINE
G&O	GRIND AND OVERLAY
CML&C	CEMENT MORTAR LINED & COATED
WMWD	WESTERN MUNICIPAL WATER DISTRICT
P.I.P.	PROTECT IN PLACE
	PROPOSED ST. LT.
	EXISTING ST. LT.
	PROPOSED SIGN
	EXISTING SIGN

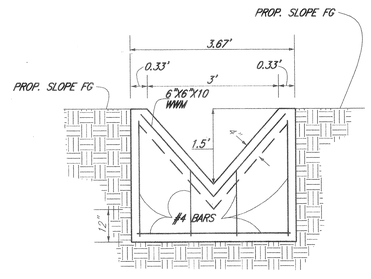

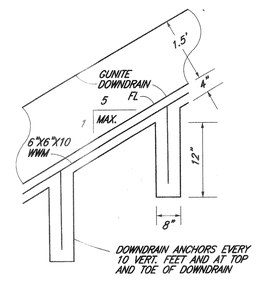

DETAIL NO. 1
DOWNDRAIN ANCHOR DETAIL (23)
NOT TO SCALE

CONSTRUCTION NOTES		QTY	UNIT
1	CONSTRUCT 4" OVER 8" MIN. CL II AB	83,301	SF
2	CONSTRUCT 6" TYPE I C&G PER CITY OF RIVERSIDE STD. DWG. NO. 200	2,910	LF
3	CONSTRUCT SIDEWALK PER CITY OF RIVERSIDE STANDARD DRAWING NO. 325	8,760	SF
4	CONSTRUCT WHEELCHAIR RAMP PER CITY OF RIVERSIDE STD DWG. NO. 304	4	EA
5	INSTALL BARRICADE PER CITY OF RIVERSIDE STD DWG. NO. 180	56	LF
6	CONSTRUCT CROSS-GUTTER PER CITY OF RIVERSIDE STD DWG. NO. 220	3	EA
7	CONSTRUCT CONCRETE DOWNDRAIN PER DETAIL "1" THIS SHEET	12	LF
8	INSTALL RIP-RAP VELOCITY REDUCER PER DETAIL "2" ON SHEET 2	25	SF
9	CONSTRUCT 2"X4" REDWOOD HEADER	1600	LF
10	RELOCATE EXIST. 1½" WATER METER ~~(INSTALL NEW METER)~~ BEHIND PROPERTY SIDEWALK BY CITY FORCES.	1	EA
11	REMOVE AND RELOCATE EXIST. 8" FIRE SERVICE VAULT AND PIPING, RE-CONNECT TAIL PIPE BY CITY FORCES.	1	EA

REGISTERED PROFESSIONAL ENGINEER
WILLIAM D. BROOKS
No. 53114
Exp. 6-30-07
CIVIL
STATE OF CALIFORNIA

CONSTRUCTION

PW06-0233

Underground Service Alert
CALL BEFORE YOU DIG
Call: TOLL FREE
1-800
227-2600
TWO WORKING DAYS BEFORE YOU DIG

PRIVATE ENGINEERING NOTE

CONSTRUCTION CONTRACTOR AGREES THAT IN ACCORDANCE WITH GENERALLY ACCEPTED CONSTRUCTION PRACTICES, CONSTRUCTION CONTRACTOR WILL BE REQUIRED TO ASSUME SOLE AND COMPLETE RESPONSIBILITY FOR JOB SITE CONDITIONS DURING THE COURSE OF CONSTRUCTION OF THE PROJECT, INCLUDING THE SAFETY OF ALL PERSONS AND PROPERTY; THAT THIS REQUIREMENT SHALL BE MADE TO APPLY CONTINUOUSLY AND NOT BE LIMITED TO NORMAL WORKING HOURS, AND CONSTRUCTION CONTRACTOR FURTHER AGREES TO DEFEND, INDEMNIFY AND HOLD DESIGN PROFESSIONAL HARMLESS FROM ANY AND ALL LIABILITY, REAL OR ALLEGED, IN CONNECTION WITH THE PERFORMANCE OF WORK ON THIS PROJECT, EXCEPTING LIABILITY ARISING FROM THE SOLE NEGLIGENCE OF DESIGN PROFESSIONAL.

Plans Prepared Under Supervision Of
ARMSTRONG & BROOKS CONSULTING ENGINEERS
1530 CONSUMER CIRCLE, UNIT "B"
CORONA, CALIFORNIA 92880
VOICE: (951) 372-8400; FAX: (951) 372-8430

WILLIAM D. BROOKS — Date 5-16-06
R.C.E. No. C53114 — Expires 6/30/07

BENCHMARK: K7-B2
COUNTY SURVEYOR'S BRASS MONUMENT WELL AT THE CENTERLINE INTERSECTION OF NORTH MAIN STREET AND PLACENTIA LANE, ADJUSTED 1971,
ELEV. 833.594

MARK	REVISIONS	APPR.	DATE

DESIGNED BY A.R.T. DRAWN BY J.P. CHECKED BY D.G.A.

CITY OF RIVERSIDE, CALIFORNIA
PUBLIC WORKS DEPARTMENT

APPROVED BY	BY	DATE
PRINCIPAL ENGINEER	CH	6/21/06
~~PARK DEPARTMENT~~		
TRAFFIC DIVISION		6/21/06
~~STREET SERVICES~~		

APPROVED BY
CITY ENGINEER
DATE 7/17/06

CITY OF RIVERSIDE
REID PARK IMPROVEMENTS
GARNER ROAD
STREET IMPROVEMENT PLANS
TITLE SHEET

HORIZ. SCALE: AS SHOWN VERT. SCALE:

ACCOUNT NO.
R-3933
SHEET 1 OF 3

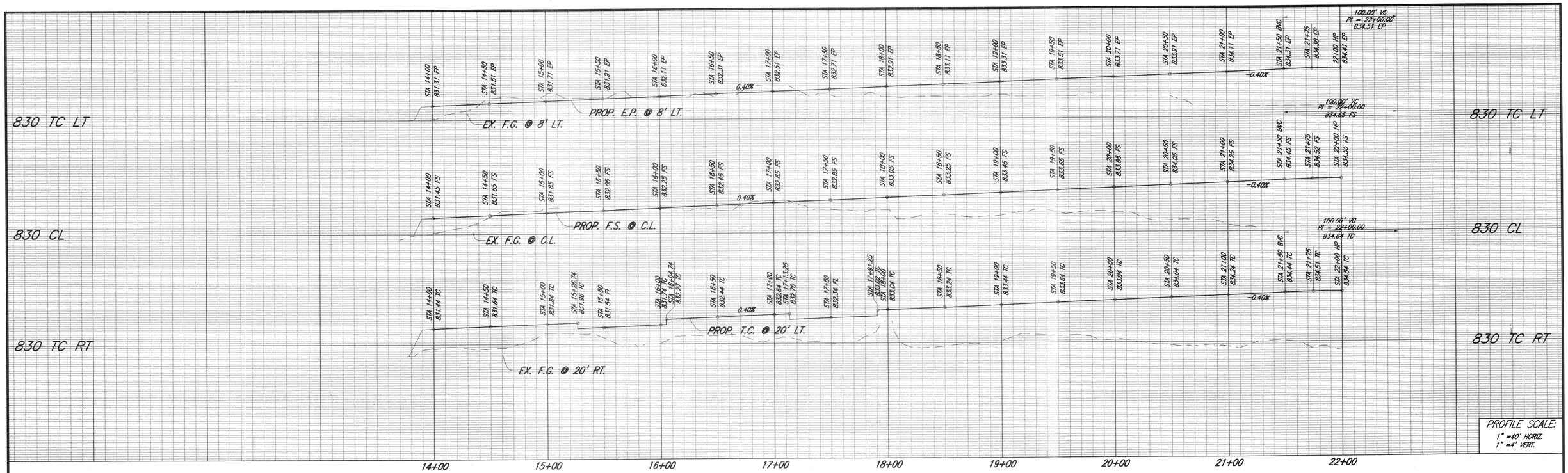

PROFILE SCALE:
1" =40' HORIZ.
1" =4' VERT.

CONSTRUCTION NOTES

1	CONSTRUCT 4.0" OVER 8.0" MIN. CL II AB
2	CONSTRUCT 6" TYPE I C&G PER CITY OF RIVERSIDE STD. DWG. NO. 200
3	CONSTRUCT SIDEWALK PER CITY OF RIVERSIDE STANDARD DRAWING NO. 325
4	CONSTRUCT WHEELCHAIR RAMP PER CITY OF RIVERSIDE STD DWG. NO. 304
5	INSTALL BARRICADE PER CITY OF RIVERSIDE STD DWG. NO. 180
6	CONSTRUCT CROSS-GUTTER PER CITY OF RIVERSIDE STD DWG. NO. 220
7	CONSTRUCT CONCRETE DOWNDRAIN PER DETAIL "1" ON SHEET 1
8	INSTALL RIP-RAP VELOCITY REDUCER PER DETAIL "2" THIS SHEET
9	CONSTRUCT 2"x4" REDWOOD HEADER.

CURVE DATA

NUMBER	DELTA ANGLE	RADIUS	LENGTH	TANGENT
C1	90°00'00"	27.00'	42.41'	27.00'

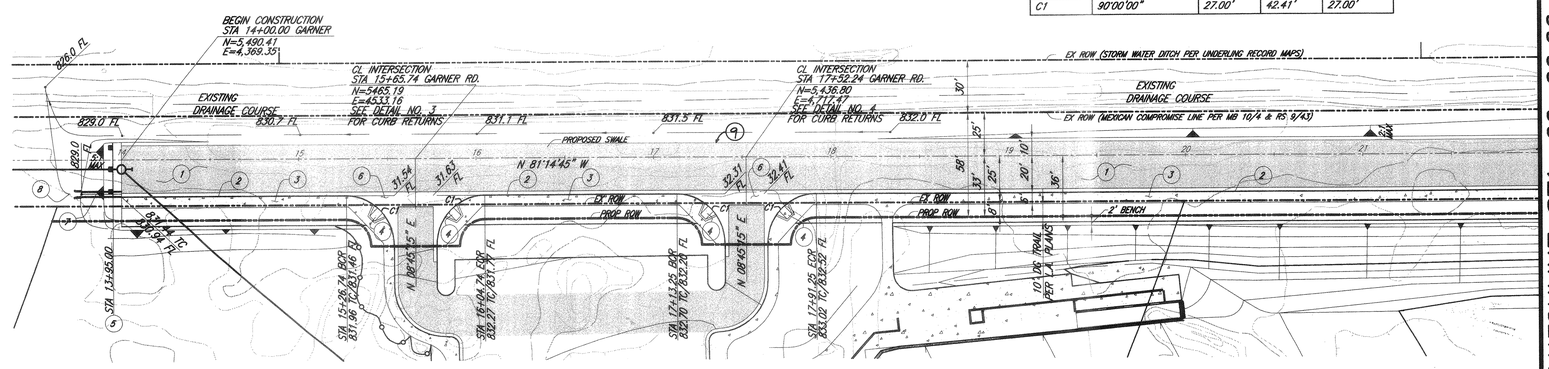

MATCHLINE STA. 22+00.00
SEE SHEET NO. 3

SCALE 1" = 40'

PAVING LEGEND

NEW AC PAVING

PCC DWY

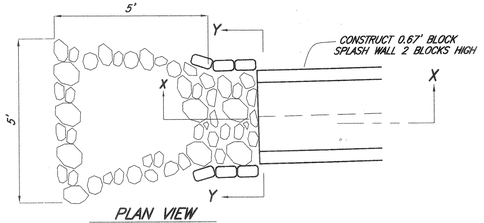

PLAN VIEW

NOT TO SCALE

DETAIL NO. 2
DOWNDRAIN TO RIP-RAP TRANSITION (8)

NOT TO SCALE

GARNER ROAD

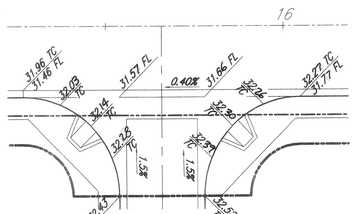

DETAIL NO. 3
DRIVEWAY CURB RETURNS

SCALE: 1"=20'

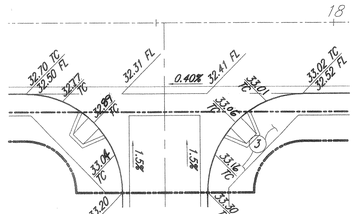

DETAIL NO. 4
DRIVEWAY CURB RETURNS

SCALE: 1"=20'

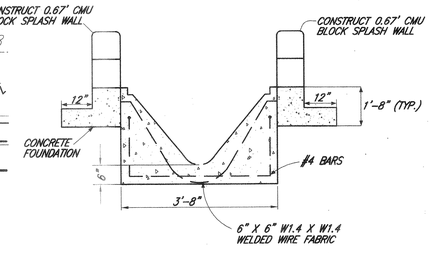

SECTION "Y-Y"

NOT TO SCALE

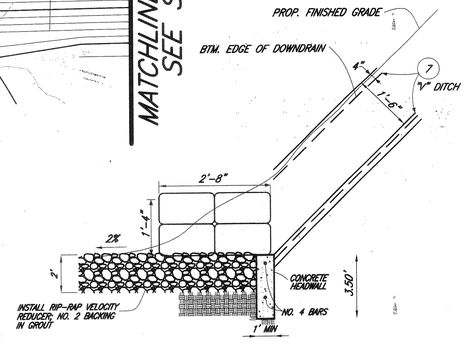

SECTION "X-X"

NOT TO SCALE

PW06-0233

Underground Service Alert
CALL BEFORE YOU DIG
Call: TOLL FREE
1-800
227-2600
TWO WORKING DAYS BEFORE YOU DIG

PRIVATE ENGINEERING NOTE

CONSTRUCTION CONTRACTOR AGREES THAT IN ACCORDANCE WITH GENERALLY ACCEPTED CONSTRUCTION PRACTICES, CONSTRUCTION CONTRACTOR WILL BE REQUIRED TO ASSUME SOLE AND COMPLETE RESPONSIBILITY FOR JOB SITE CONDITIONS DURING THE COURSE OF CONSTRUCTION OF THE PROJECT, INCLUDING THE SAFETY OF ALL PERSONS AND PROPERTY; THAT THIS REQUIREMENT SHALL BE MADE TO APPLY CONTINUOUSLY AND NOT BE LIMITED TO NORMAL WORKING HOURS, AND CONSTRUCTION CONTRACTOR FURTHER AGREES TO DEFEND, INDEMNIFY AND HOLD DESIGN PROFESSIONAL HARMLESS FROM ANY AND ALL LIABILITY, REAL OR ALLEGED, IN CONNECTION WITH THE PERFORMANCE OF WORK ON THIS PROJECT, EXCEPTING LIABILITY ARISING FROM THE SOLE NEGLIGENCE OF DESIGN PROFESSIONAL.

Plans Prepared Under Supervision Of
ARMSTRONG & BROOKS CONSULTING ENGINEERS
1530 CONSUMER CIRCLE, UNIT "B"
CORONA, CALIFORNIA 92880
VOICE: (951) 372-8400; FAX: (951) 372-8430

WILLIAM D. BROOKS
R.C.E. No. C53114
Date 5-16-06
Expires 6/30/07

BENCHMARK: K7-B2
COUNTY SURVEYOR'S BRASS MONUMENT WELL AT THE CENTERLINE INTERSECTION OF NORTH MAIN STREET AND PLACENTIA LANE, ADJUSTED 1971,

ELEV. 833.594

MARK	REVISIONS	APPR	DATE

DESIGNED BY A.R.T. DRAWN BY J.P. CHECKED BY D.G.A.

CITY OF RIVERSIDE, CALIFORNIA
PUBLIC WORKS DEPARTMENT

APPROVED BY	BY	DATE
PRINCIPAL ENGINEER	DH	6/6/06
~~PARK DEPARTMENT~~		
TRAFFIC DIVISION		6/6/06
~~STREET SERVICES~~		

APPROVED BY
CITY ENGINEER
DATE 7/17/06

CITY OF RIVERSIDE

REID PARK IMPROVEMENTS
GARNER ROAD
STREET IMPROVEMENT PLANS
STA. 14+00 TO STA 22+00

HORIZ. SCALE: AS SHOWN VERT. SCALE: AS SHOWN

ACCOUNT NO. R-3933

SHEET 2 OF 3

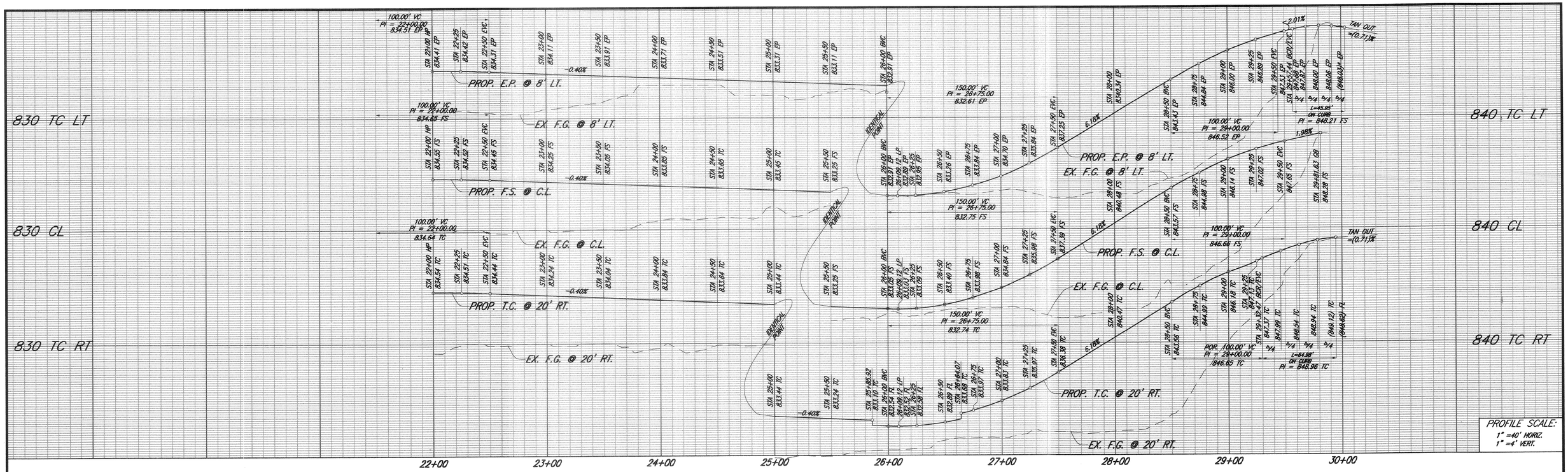

PROFILE SCALE:
1" =40' HORIZ.
1" =4' VERT.

CONSTRUCTION NOTES

1	CONSTRUCT 4.0" OVER 8.0" MIN. CL II AB
2	CONSTRUCT 6" TYPE I C&G PER CITY OF RIVERSIDE STD. DWG. NO. 200
3	CONSTRUCT SIDEWALK PER CITY OF RIVERSIDE STANDARD DRAWING NO. 325
6	CONSTRUCT CROSS-GUTTER PER CITY OF RIVERSIDE STD DWG. NO. 220
9	CONSTRUCT 2"x4" REDWOOD HEADER
10	RELOCATE EXIST. 1-½" WATER METER (INSTALL NEW 2" W.S.) PER PUBLIC UTILITIES-WATER DEPARTMENT DIRECTION
11	REMOVE AND RELOCATE EXIST. 8" FIRE SERVICE VAULT AND PIPING, PER PUBLIC UTILITIES-WATER DEPARTMENT DIRECTION

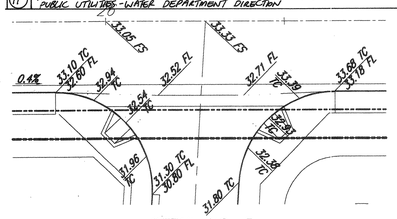

DETAIL NO. 5
DRIVEWAY CURB RETURNS

SCALE: 1"=20'

SEE SHEET NO. 2
MATCHLINE STA. 22+00.00

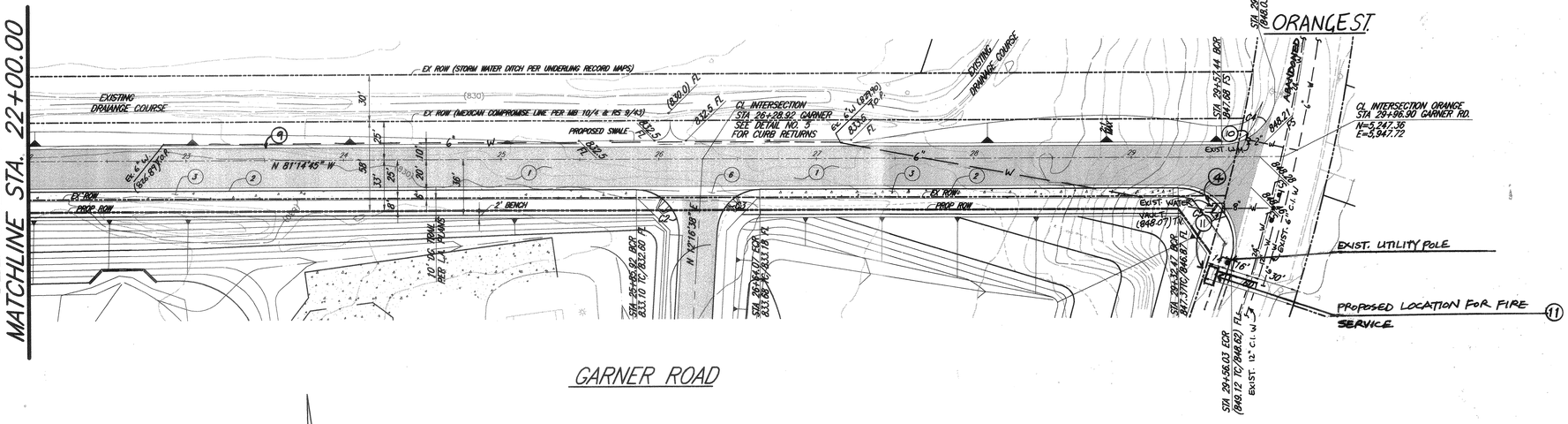

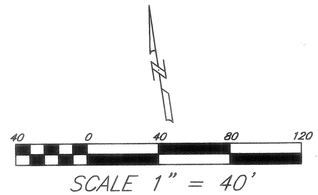

SCALE 1" = 40'

PAVING LEGEND

- NEW AC PAVING
- PCC DWY

CURVE DATA

NUMBER	DELTA ANGLE	RADIUS	LENGTH	TANGENT
C2	94°17'00"	27.00'	44.43'	29.10'
C3	85°42'37"	27.00'	40.39'	25.05'
C4	75°13'16"	35.00'	45.95'	26.96'
C5	106°22'25"	35.00'	64.98'	46.76'

* DENOTES FIELD VERIFY PRIOR TO CONSTRUCTION AND NOTIFY ENGINEER IN THE EVENT OF ELEV. DISCREPANCY BY MORE THAN 0.01-FEET
T.O.P. - TOP OF PIPE
T.V. - TOP OF WATER VAULT

PW06-0233

Underground Service Alert
CALL BEFORE YOU DIG
Call: TOLL FREE 1-800 227-2600
TWO WORKING DAYS BEFORE YOU DIG

PRIVATE ENGINEERING NOTE

CONSTRUCTION CONTRACTOR AGREES THAT IN ACCORDANCE WITH GENERALLY ACCEPTED CONSTRUCTION PRACTICES, CONSTRUCTION CONTRACTOR WILL BE REQUIRED TO ASSUME SOLE AND COMPLETE RESPONSIBILITY FOR JOB SITE CONDITIONS DURING THE COURSE OF CONSTRUCTION OF THE PROJECT, INCLUDING THE SAFETY OF ALL PERSONS AND PROPERTY THAT THIS REQUIREMENT SHALL BE MADE TO APPLY CONTINUOUSLY AND NOT BE LIMITED TO NORMAL WORKING HOURS, AND CONSTRUCTION CONTRACTOR FURTHER AGREES TO DEFEND, INDEMNIFY AND HOLD DESIGN PROFESSIONAL HARMLESS FROM ANY AND ALL LIABILITY, REAL OR ALLEGED, IN CONNECTION WITH THE PERFORMANCE OF WORK ON THIS PROJECT, EXCEPTING LIABILITY ARISING FROM THE SOLE NEGLIGENCE OF DESIGN PROFESSIONAL.

Plans Prepared Under Supervision Of
ARMSTRONG & BROOKS CONSULTING ENGINEERS
1630 CONSUMER CIRCLE, UNIT "B"
CORONA, CALIFORNIA 92880
VOICE: (951) 372-8400; FAX: (951) 372-8430
WILLIAM D. BROOKS
R.C.E. No. C53114
Date 5-16-06
Expires 6/30/07

BENCHMARK: K7-B2
COUNTY SURVEYOR'S BRASS MONUMENT WELL AT THE CENTERLINE INTERSECTION OF NORTH MAIN STREET AND PLACENTIA LANE, ADJUSTED 1971,
ELEV. 833.594

MARK	REVISIONS	APPR.	DATE

DESIGNED BY A.R.T. DRAWN BY J.P. CHECKED BY D.G.A.

CITY OF RIVERSIDE, CALIFORNIA
PUBLIC WORKS DEPARTMENT

APPROVED BY	BY	DATE
PRINCIPAL ENGINEER	AH	6/5/06
~~PARK DEPARTMENT~~		
TRAFFIC DIVISION	SL	6/1/06
~~STREET SERVICES~~		

APPROVED BY
CITY ENGINEER
DATE 7/12/06

CITY OF RIVERSIDE

REID PARK IMPROVEMENTS
GARNER ROAD
STREET IMPROVEMENT PLANS
STA. 22+00 TO STA. 29+96.90

HORIZ. SCALE: AS SHOWN VERT. SCALE: AS SHOWN

ACCOUNT NO. R-3933

SHEET 3 OF 3

SEWER IMPROVEMENT PLAN

REID PARK

GENERAL NOTES:

1. NO PERSON SHALL PERFORM ANY CONSTRUCTION ACTIVITY OR INSTALL ANY OBJECTS WITHIN THE PUBLIC RIGHTS-OF-WAY OR EASEMENTS OF THE CITY OF RIVERSIDE WITHOUT A VALID CONSTRUCTION PERMIT OR, A STREET OPENING PERMIT OR AN ENCROACHMENT PERMIT ISSUED BY THE CITY'S PUBLIC WORKS DEPARTMENT.
2. IT SHALL BE THE RESPONSIBILITY OF THE CONTRACTOR TO CLEAR THE RIGHT OF WAY IN ACCORDANCE WITH THE PROVISIONS OF LAW AS IT AFFECTS EACH UTILITY INCLUDING IRRIGATION LINES AND APPURTENANCES AND AT NO COST TO THE CITY.
3. CONSTRUCTION SHALL BE IN ACCORDANCE WITH THE CITY OF RIVERSIDE DEPARTMENT OF PUBLIC WORKS, STANDARD DRAWINGS, ITS SUPPLEMENTAL NOTES AND THE STANDARD SPECIFICATIONS FOR PUBLIC WORKS CONSTRUCTION, CURRENT EDITION.
4. THE PRIVATE ENGINEER SIGNING THESE PLANS IS RESPONSIBLE FOR ASSURING THE ACCURACY AND ACCEPTABILITY OF THE WORK HEREON. IN THE EVENT OF DISCREPANCIES ARISING DURING CONSTRUCTION, THE PRIVATE ENGINEER SHALL BE RESPONSIBLE FOR DETERMINING AN ACCEPTABLE SOLUTION AND REVISING THE PLANS FOR APPROVAL BY THE CITY.
5. QUANTITIES SHOWN ARE FOR INFORMATION ONLY AND THE CITY OF RIVERSIDE IS NOT RESPONSIBLE FOR THEIR ACCURACY.
6. THE CONTRACTOR SHALL BE RESPONSIBLE FOR PRESERVING OR RE-ESTABLISHING AND REFERENCING SURVEY MONUMENTS DESTROYED, DISTURBED OR BURIED AS A RESULT OF CONSTRUCTION SHOWN HEREON.
7. ALL FLAGGED ELEVATIONS SHALL BE STAKED IN THE FIELD BY THE CONTRACTOR'S SURVEYOR.
8. WHERE NEW PAVEMENT IS TO JOIN THE EXISTING PAVEMENT, THE EDGE OF THE EXISTING PAVEMENT SHALL BE TRIMMED IN A SMOOTH AND STRAIGHT LINE. CONSTRUCT MATCH-UP PAVING AS SHOWN ON THE PLANS AND OVERLAY PAVING AS DIRECTED IN THE FIELD TO PRODUCE A SMOOTH SECTION.
9. STREET IMPROVEMENT WORK THAT WILL CAUSE DAMAGE TO THE DETECTOR LOOP(S) SHALL NOT BE PERFORMED UNTIL TRAFFIC SIGNAL MAINTENANCE PERSONNEL HAVE BEEN NOTIFIED AND THE NECESSARY TIMING ADJUSTMENTS ARE MADE TO MAINTAIN SIGNAL OPERATION.
10. FINAL STRIPING FOR TRAFFIC CONTROL AND/OR PAVEMENT MARKING REPLACEMENT TO BE THE RESPONSIBILITY OF THE CONTRACTOR.
11. THE CONTRACTOR SHALL CALL IN A LOCATION REQUEST TO UNDERGROUND SERVICE ALERT (USA), PHONE #1-800-227-2600, TWO WORKING DAYS BEFORE DIGGING. NO CONSTRUCTION PERMIT WILL BE ISSUED BY THE PUBLIC WORKS DEPARTMENT INVOLVING EXCAVATION FOR UNDERGROUND FACILITIES UNLESS THE APPLICANT HAS BEEN PROVIDED AN INQUIRY IDENTIFICATION NUMBER BY U.S.A.
12. IN PAVEMENT OVERLAY AREAS, ANY DISTRESSED EXISTING PAVEMENT SHALL BE REMOVED AND REPLACED AS DIRECTED BY THE INSPECTOR PRIOR TO OVERLAYING WITH A.C. PAVING.
13. THE CONTRACTOR IS TO VERIFY EXISTING SEWER LOCATION AND ELEVATION PRIOR TO START OF CONSTRUCTION. POTHOLE EXISTING FACILITIES PRIOR TO TRENCH EXCAVATION AND NOTIFY THE ENGINEER IMMEDIATELY IN THE EVENT OF A CONSTRUCTION CONFLICT OR UNDISCLOSED UTILITY.
14. LOCATION OF LATERALS TO BE DETERMINED IN THE FIELD AT THE DIRECTION OF THE OWNER. AVOID CONFLICT WITH PROPOSED AND/OR EXISTING FACILITIES.
15. A PLUG SHALL BE INSTALLED AND WILL REMAIN IN PLACE WHERE THE NEW SEWER CONNECTS WITH THE EXISTING SEWER UNTIL THE NEW SEWER IS ACCEPTED BY THE CITY.
16. THE SEWER CONTRACTOR SHALL ADJUST MANHOLES TO FINAL GRADE AFTER PAVING IS COMPLETED.
17. MANHOLES IN OPEN FIELDS SHALL BE SET TWO (2') FEET ABOVE GRADE UNLESS NOTED OTHERWISE.
18. ALL MANHOLES DEEPER THAN 12' TO THE SHELF SHALL BE EQUIPPED WITH A "SAFE-T CLIMB" AS MFG. BY NORTH CONSUMER SAFETY PRODUCT, OR APPROVED EQUAL.
19. ALL PIPE BEDDING WILL BE PER CITY OF RIVERSIDE STANDARD NO 452, CASE PER PLAN.
20. ALL SANITARY SEWER PIPELINE TESTING SHALL BE PER THE "GREENBOOK" – SSPWC SECTION 306-1.4.4 "AIR PRESSURE TEST".

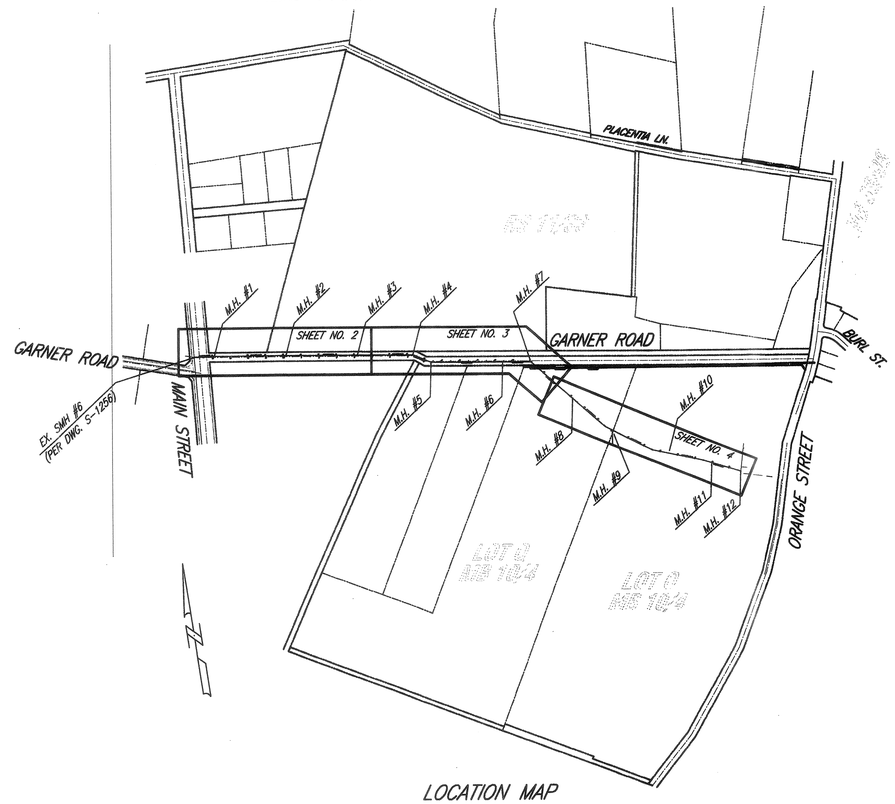

LOCATION MAP

Scale 1" = 400'

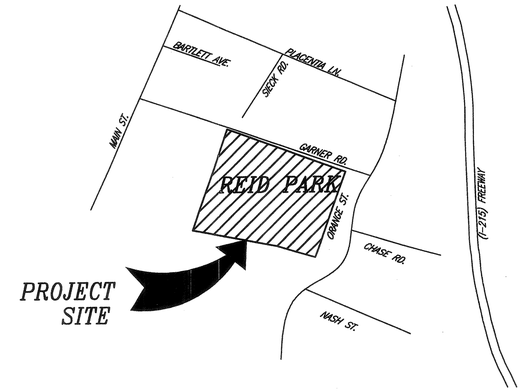

VICINITY MAP

NTS

THOMAS GUIDE MAP
RIVERSIDE COUNTY V. 2004
PG. 716, GRID H-4

LEGEND

(590.0)	EXISTING ELEVATION
590.0	PROPOSED FINISH SURFACE ELEVATION
PAD=590.0	PROPOSED PAD ELEVATION
F.F.=590.00	PROPOSED FINISH FLOOR ELEVATION
(SD)	EXISTING STORM DRAIN
(S)	EXISTING SEWER
(W)	EXISTING WATER
(G)	EXISTING GAS
S	PROPOSED SEWER
TC	TOP OF CURB
FL	FLOW LINE
FG	FINISH GRADE
EP	EDGE OF PAVEMENT
R/W	RIGHT-OF-WAY
P/L	PROPERTY LINE
G&O	GRIND AND OVERLAY
CML&C	CEMENT MORTAR LINED & COATED
WMWD	WESTERN MUNICIPAL WATER DISTRICT
P.I.P.	PROTECT IN PLACE
	PROPOSED ST. LT.
	EXISTING ST. LT.
	PROPOSED SIGN
	EXISTING SIGN

NOTICE TO CONTRACTORS:

THE EXISTENCE AND LOCATION OF ANY UNDERGROUND UTILITY PIPES, CONDUITS, OR STRUCTURES SHOWN ON THESE PLANS WERE OBTAINED BY A SEARCH OF AVAILABLE RECORDS. TO THE BEST OF OUR KNOWLEDGE, THERE ARE NO EXISTING UTILITIES EXCEPT THOSE SHOWN ON THESE PLANS. THE CONTRACTOR IS REQUIRED TO TAKE PRECAUTIONARY MEASURES TO PROTECT THE UTILITY LINES SHOWN ON THESE DRAWINGS. THE CONTRACTOR FURTHER ASSUMES ALL LIABILITY AND RESPONSIBILITY FOR THE UTILITY PIPES, CONDUITS OR STRUCTURES, SHOWN OR NOT SHOWN ON THESE PLANS.

CONTRACTOR AGREES THAT HE SHALL ASSUME SOLE AND COMPLETE RESPONSIBILITY FOR JOBSITE CONDUITS DURING THE COURSE OF CONSTRUCTION ON THIS PROJECT, INCLUDING SAFETY OF ALL PERSONS OR PROPERTY; THAT THIS REQUIREMENT SHALL APPLY CONTINUOUSLY AND NOT BE LIMITED TO NORMAL WORKING HOURS; THAT THE CONTRACTOR SHALL DEFEND, INDEMNIFY, AND HOLD THE CITY, THE OWNER, AND THE ENGINEER HARMLESS FROM ANY AND ALL LIABILITY, REAL OR ALLEGED, IN CONNECTION WITH THE PERFORMANCE OF WORK ON THIS PROJECT.

THE CONTRACTOR SHALL CALL IN A LOCATION REQUEST TO UNDERGROUND SERVICE ALERT (USA) PH. 1-800-227-2600, TWO (2) WORKING DAYS PRIOR TO DIGGING. NO CONSTRUCTION PERMIT ISSUED BY THE PUBLIC WORKS DEPARTMENT SHALL BE VALID INVOLVING UNDERGROUND FACILITIES UNLESS THE APPLICANT HAS AN INQUIRY IDENTIFICATION NUMBER ISSUED BY U.S.A.

CARE SHOULD BE TAKEN TO PREVENT GRADED DITCHES AND SWALES FROM UNDERMINING STREET IMPROVEMENTS. UPON INSPECTION OF THE SITES, THE CITY ENGINEER MAY REQUIRE TEMPORARY GUNITE SWALES, ENTERING OR LEAVING IMPROVEMENTS.

ENGINEER

ARMSTRONG & BROOKS CONSULTING ENGINEERS
1530 CONSUMER CIRCLE UNIT B
CORONA, CA 92880
PH. (951) 372-8400 FAX (951) 372-8430
CITY OF RIVERSIDE BUS. TAX # 105482 EXPIRES 9/28/2006

OWNER

CITY OF RIVERSIDE PARKS & RECREATION DEPARTMENT
3900 MAIN STREET
RIVERSIDE, CA 92522
ATTN: ANDY EMERY
PH. (951) 826-2021

WDID NO.

#83333M000135

SITE ADDRESS

701 ORANGE STREET

SOILS ENGINEER

CONVERSE CONSULTANTS
10391 CORPORATE DRIVE
REDLANDS, CA 92374
PH. (909) 796-0544 FAX (909) 796-7675

SHEET INDEX

1 TITLE SHEET, GENERAL NOTES & ABBREVIATIONS
2 GARNER ROAD SEWER PLAN AND PROFILE STA. 20+00 TO 31+00
3 GARNER ROAD SEWER PLAN AND PROFILE STA. 31+00 TO 41+00
4 REID PARK ON-SITE SEWER PLAN AND PROFILE STA. 41+00 TO 52+70.68

CONSTRUCTION NOTES		QTY	UNIT
30	REMOVE EXISTING 18" VCP STUB-OUT	8	LF
31	CONSTRUCT 12" VCP SEWER IN BEDDING PER C.O.R. STD. DWG. NO. 452 IN CASE 1 BEDDING	1,870	LF
32	CONSTRUCT 8" SDR 35 PVC SEWER IN BEDDING PER C.O.R. STD. DWG. NO. 452 IN CASE 1 BEDDING	1,349	LF
33	CONSTRUCT 5' DIAMETER MANHOLE PER C.O.R. STD. DWG. NO. 500	9	EA
34	CONSTRUCT 4' DIAMETER MANHOLE PER C.O.R. STD. DWG. NO. 500	3	EA
35	REPAIR TRENCH PER C.O.R. STD. DWG. NO. 453	550	SF
36	JOIN EXISTING SEWER MANHOLE PER DEATIL ON SHEET NO. 2	1	EA
37	JOIN EXISTING 4" SEWER	1	EA
38	CONSTRUCT 4" PVC SDR 35 SEWER LATERAL PER C.O.R. STD. DWG. NO. 562 IN CASE 1 BEDDING	73	LF
39	CONSTRUCT SEWER CLEANOUT PER C.O.R. STD. DWG. NO. 580	1	EA
39A	PROVIDE 4' STUB AND PLUG	1	EA

REGISTERED PROFESSIONAL ENGINEER WILLIAM D. BROOKS No. 53114 Exp. 6-30-07 CIVIL STATE OF CALIFORNIA

RECEIVED MAY 2006 PARK & RECREATION PLANNING & DESIGN

CONSTRUCTION SET

PW06-023A

PUBLIC UTILITIES-ELECTRIC DIVISION		PUBLIC UTILITIES-WATER DIVISION	
APPOVED BY	DATE	MW APPROVED BY	5/22/06 DATE

Underground Service Alert
CALL BEFORE YOU DIG
Call: TOLL FREE 1-800 227-2600
TWO WORKING DAYS BEFORE YOU DIG

PRIVATE ENGINEERING NOTE

CONSTRUCTION CONTRACTOR AGREES THAT IN ACCORDANCE WITH GENERALLY ACCEPTED CONSTRUCTION PRACTICES, CONSTRUCTION CONTRACTOR WILL BE REQUIRED TO ASSUME SOLE AND COMPLETE RESPONSIBILITY FOR JOB SITE CONDITIONS DURING THE COURSE OF CONSTRUCTION OF THE PROJECT, INCLUDING THE SAFETY OF ALL PERSONS AND PROPERTY; THAT THIS REQUIREMENT SHALL BE MADE TO APPLY CONTINUOUSLY AND NOT BE LIMITED TO NORMAL WORKING HOURS, AND CONSTRUCTION CONTRACTOR FURTHER AGREES TO DEFEND, INDEMNIFY AND HOLD DESIGN PROFESSIONAL HARMLESS FROM ANY AND ALL LIABILITY, REAL OR ALLEGED, IN CONNECTION WITH THE PERFORMANCE OF WORK ON THIS PROJECT, EXCEPTING LIABILITY ARISING FROM THE SOLE NEGLIGENCE OF DESIGN PROFESSIONAL.

Plans Prepared Under Supervision Of
ARMSTRONG & BROOKS CONSULTING ENGINEERS
1630 CONSUMER CIRCLE, UNIT "B"
CORONA, CALIFORNIA 92880
VOICE: (951) 372-8400; FAX: (951) 372-8430
WILLIAM D. BROOKS — Date 5.16.06
R.C.E. No. C53114 — Expires 6/30/07

BENCHMARK: K7-B2
COUNTY SURVEYOR'S BRASS MONUMENT WELL AT THE CENTERLINE INTERSECTION OF NORTH MAIN STREET AND PLACENTIA LANE, ADJUSTED 1971,
ELEV. 833.594

MARK	REVISIONS	APPR	DATE

DESIGNED BY CRV DRAWN BY CRV CHECKED BY WDB

CITY OF RIVERSIDE, CALIFORNIA
PUBLIC WORKS DEPARTMENT

APPROVED BY	BY	DATE
PRINCIPAL ENGINEER		
PARK DEPARTMENT		
~~TRAFFIC DIVISION~~		
~~STREET SERVICES~~		

APPROVED BY CITY ENGINEER
DATE 5/26/06

CITY OF RIVERSIDE

REID PARK
SEWER IMPROVEMENT PLANS
TITLE SHEET

ACCOUNT NO. S-1967

SHEET 1 OF 4

HORIZ. SCALE: AS SHOWN VERT. SCALE: N/A

R-12

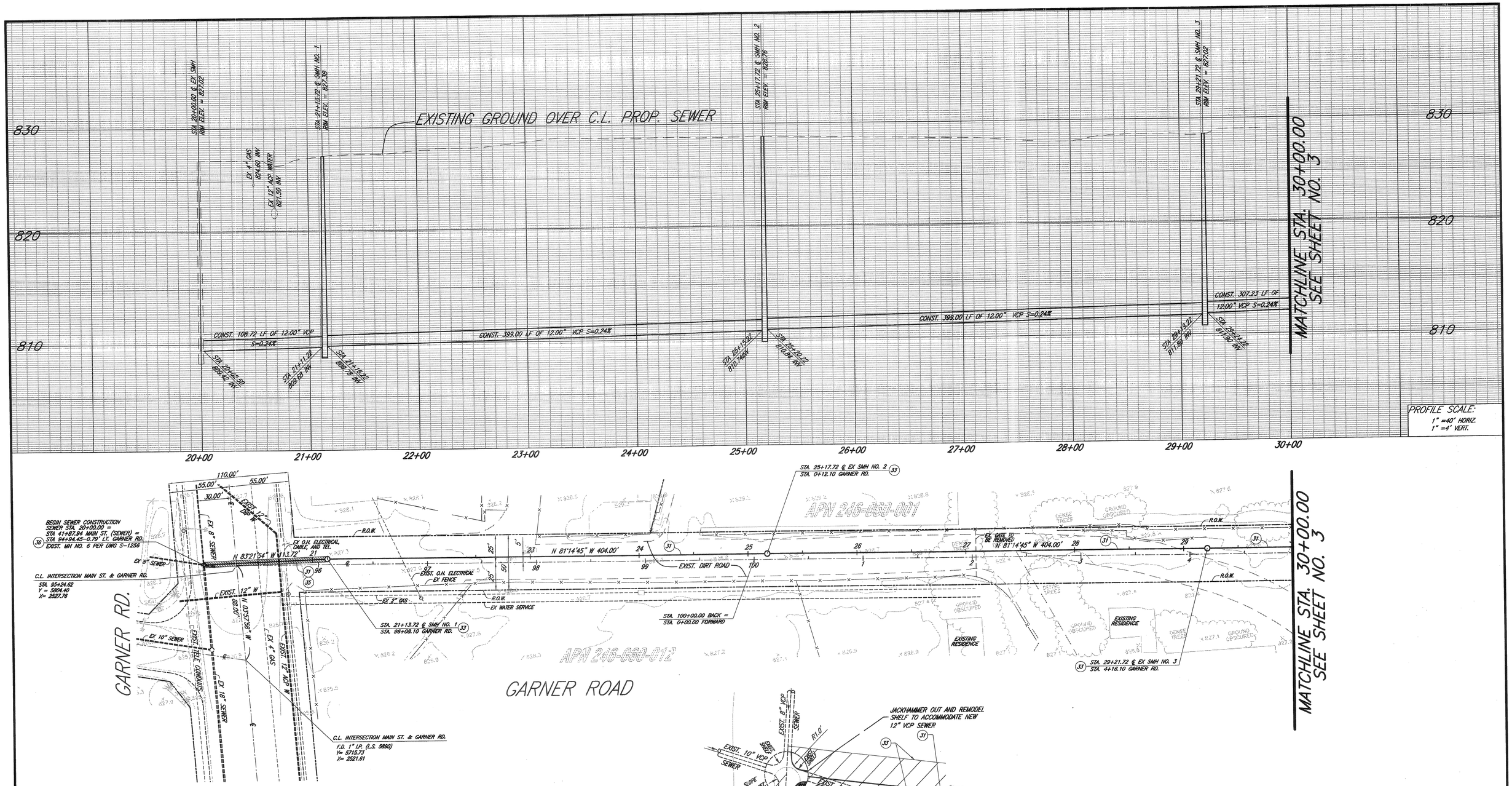

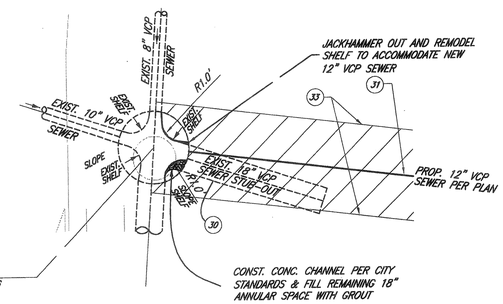

DETAIL NO. 1 (EX. SMH NO. 4)

SCALE: 1'=4'

CONSTRUCTION NOTES	
30	REMOVE EXISTING 18" VCP STUB-OUT
31	CONSTRUCT 12" VCP SEWER IN BEDDING PER C.O.R. STD. DWG. NO. 452 CASE I BEDDING
33	CONSTRUCT 5' DIAMETER MANHOLE PER C.O.R. STD. DWG. NO. 500
35	REPAIR TRENCH PER C.O.R. STD. DWG. NO. 453
36	JOIN EXISTING SEWER MANHOLE PER DETAIL NO. 1 ON SHEET NO. 2

40 0 40 80 120

SCALE 1" = 40'

PUBLIC UTILITIES–ELECTRIC DIVISION	PUBLIC UTILITIES–WATER DIVISION
APPROVED BY ____ DATE ____	APPROVED BY MW MUnd DATE 5/22/06

PW06-0234

Underground Service Alert

CALL BEFORE YOU DIG

Call: TOLL FREE 1-800 227-2600

TWO WORKING DAYS BEFORE YOU DIG

PRIVATE ENGINEERING NOTE

CONSTRUCTION CONTRACTOR AGREES THAT IN ACCORDANCE WITH GENERALLY ACCEPTED CONSTRUCTION PRACTICES, CONSTRUCTION CONTRACTOR WILL BE REQUIRED TO ASSUME SOLE AND COMPLETE RESPONSIBILITY FOR JOB SITE CONDITIONS DURING THE COURSE OF CONSTRUCTION OF THE PROJECT, INCLUDING THE SAFETY OF ALL PERSONS AND PROPERTY THAT THIS REQUIREMENT SHALL BE MADE TO APPLY CONTINUOUSLY AND NOT BE LIMITED TO NORMAL WORKING HOURS, AND CONSTRUCTION CONTRACTOR FURTHER AGREES TO DEFEND, INDEMNIFY AND HOLD DESIGN PROFESSIONAL HARMLESS FROM ANY AND ALL LIABILITY, REAL OR ALLEGED, IN CONNECTION WITH THE PERFORMANCE OF WORK ON THIS PROJECT, EXCEPTING LIABILITY ARISING FROM THE SOLE NEGLIGENCE OF DESIGN PROFESSIONAL.

Plans Prepared Under Supervision Of
ARMSTRONG & BROOKS CONSULTING ENGINEERS
1530 CONSUMER CIRCLE, UNIT "B"
CORONA, CALIFORNIA 92880
VOICE: (951) 372-8400; FAX: (951) 372-8430

WILLIAM D. BROOKS — Date 5-16-06

R.C.E. No. C53114 — Expires 6/30/07

BENCHMARK: K7–B2
COUNTY SURVEYOR'S BRASS MONUMENT WELL AT THE CENTERLINE INTERSECTION OF NORTH MAIN STREET AND PLACENTIA LANE, ADJUSTED 1971,

ELEV. 833.594

MARK	REVISIONS	APPR.	DATE

DESIGNED BY CRV DRAWN BY CRV CHECKED BY WDB

CITY OF RIVERSIDE, CALIFORNIA
PUBLIC WORKS DEPARTMENT

APPROVED BY	BY	DATE	APPROVED BY
PRINCIPAL ENGINEER			
PARK DEPARTMENT		5-24-06	CITY ENGINEER
~~TRAFFIC DIVISION~~			
~~STREET SERVICES~~			

DATE 5/24/06

CITY OF RIVERSIDE

REID PARK
SEWER IMPROVEMENT PLANS
GARNER ROAD
STA 20+00 – STA 30+00

HORIZ. SCALE: AS SHOWN VERT. SCALE: AS SHOWN

ACCOUNT NO. S-1967

SHEET 2 OF 4

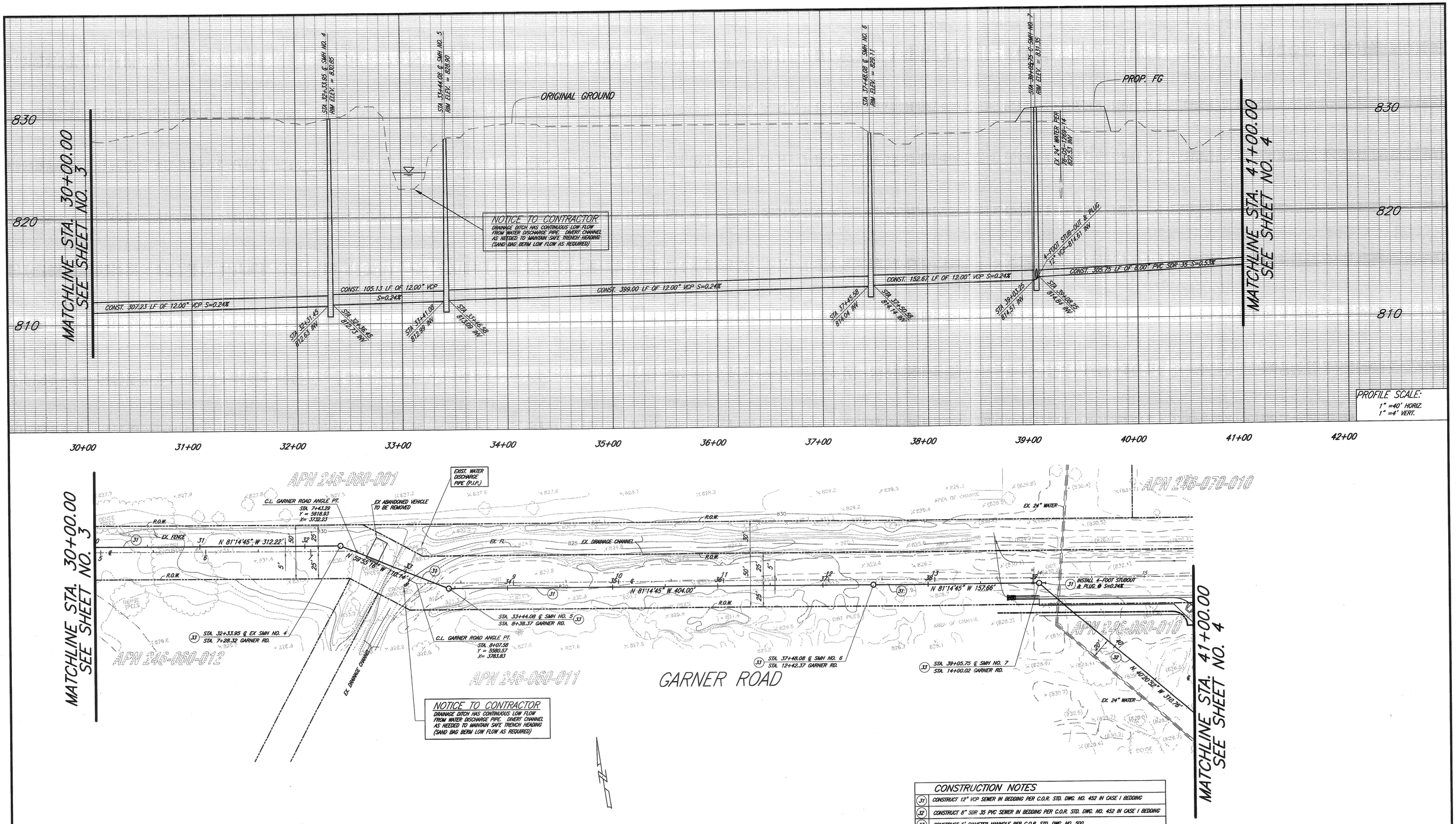

CONSTRUCTION NOTES

31	CONSTRUCT 12" VCP SEWER IN BEDDING PER C.O.R. STD. DWG. NO. 452 IN CASE I BEDDING
32	CONSTRUCT 8" SDR 35 PVC SEWER IN BEDDING PER C.O.R. STD. DWG. NO. 452 IN CASE I BEDDING
33	CONSTRUCT 5' DIAMETER MANHOLE PER C.O.R. STD. DWG. NO. 500
394	PROVIDE 4' STUB AND PLUG

PUBLIC UTILITIES—ELECTRIC DIVISION	PUBLIC UTILITIES—WATER DIVISION
APPOVED BY ____ DATE ____	APPOVED BY MW MWd DATE 5/22/06

Underground Service Alert
CALL BEFORE YOU DIG
Call: TOLL FREE 1-800 227-2600
TWO WORKING DAYS BEFORE YOU DIG

PRIVATE ENGINEERING NOTE

CONSTRUCTION CONTRACTOR AGREES THAT IN ACCORDANCE WITH GENERALLY ACCEPTED CONSTRUCTION PRACTICES, CONSTRUCTION CONTRACTOR WILL BE REQUIRED TO ASSUME SOLE AND COMPLETE RESPONSIBILITY FOR JOB SITE CONDITIONS DURING THE COURSE OF CONSTRUCTION OF THE PROJECT, INCLUDING THE SAFETY OF ALL PERSONS AND PROPERTY THAT THIS REQUIREMENT SHALL BE MADE TO APPLY CONTINUOUSLY AND NOT BE LIMITED TO NORMAL WORKING HOURS, AND CONSTRUCTION CONTRACTOR FURTHER AGREES TO DEFEND, INDEMNIFY AND HOLD DESIGN PROFESSIONAL HARMLESS FROM ANY AND ALL LIABILITY, REAL OR ALLEGED, IN CONNECTION WITH THE PERFORMANCE OF WORK ON THIS PROJECT, EXCEPTING LIABILITY ARISING FROM THE SOLE NEGLIGENCE OF DESIGN PROFESSIONAL.

Plans Prepared Under Supervision Of
ARMSTRONG & BROOKS CONSULTING ENGINEERS
1630 CONSUMER CIRCLE, UNIT "B"
CORONA, CALIFORNIA 92880
VOICE: (951) 372-8400; FAX: (951) 372-8430

WILLIAM D. BROOKS — Date 5-16-06
R.C.E. No. C53114 — Expires 6/30/07

BENCHMARK: K7-B2
COUNTY SURVEYOR'S BRASS MONUMENT WELL AT THE CENTERLINE INTERSECTION OF NORTH MAIN STREET AND PLACENTIA LANE, ADJUSTED 1971,
ELEV. 833.594

MARK	REVISIONS	APPR.	DATE

DESIGNED BY CRV DRAWN BY CRV CHECKED BY WDB

CITY OF RIVERSIDE, CALIFORNIA
PUBLIC WORKS DEPARTMENT

APPROVED BY	BY	DATE
PRINCIPAL ENGINEER		
PARK DEPARTMENT		5-24-06
~~TRAFFIC DIVISION~~		
~~STREET SERVICES~~		

APPROVED BY — CITY ENGINEER
DATE 5/26/06

CITY OF RIVERSIDE
REID PARK
SEWER IMPROVEMENT PLANS
GARNER ROAD
STA 30+00 – STA 41+00

HORIZ. SCALE: AS SHOWN VERT. SCALE: AS SHOWN

PW06-023A
ACCOUNT NO. S-1967
SHEET 3 OF 4

R42

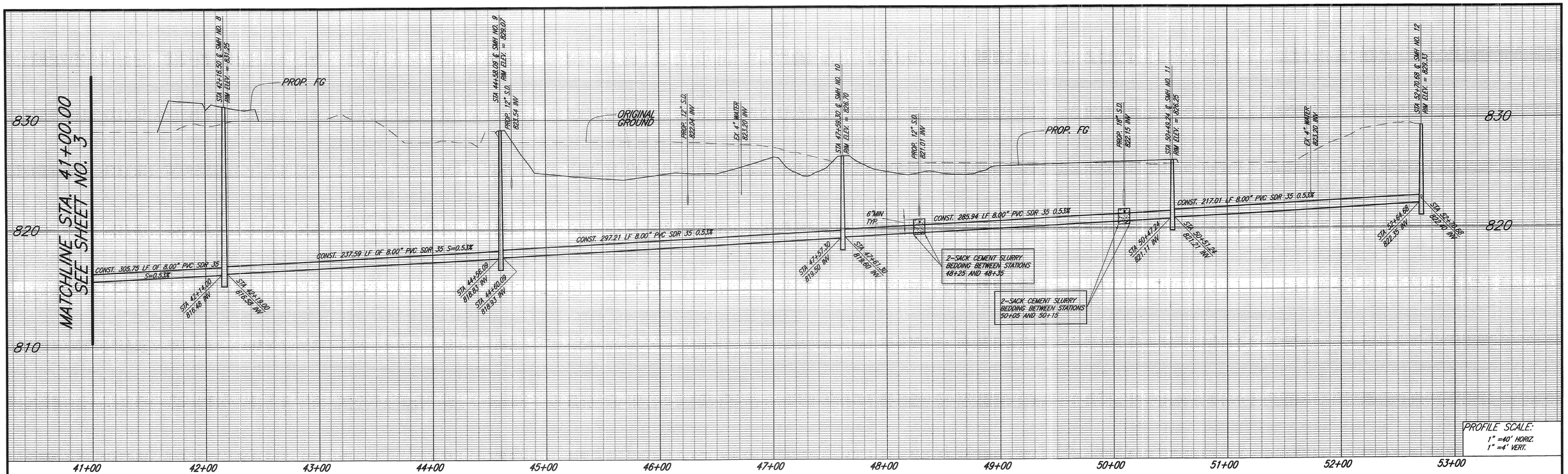

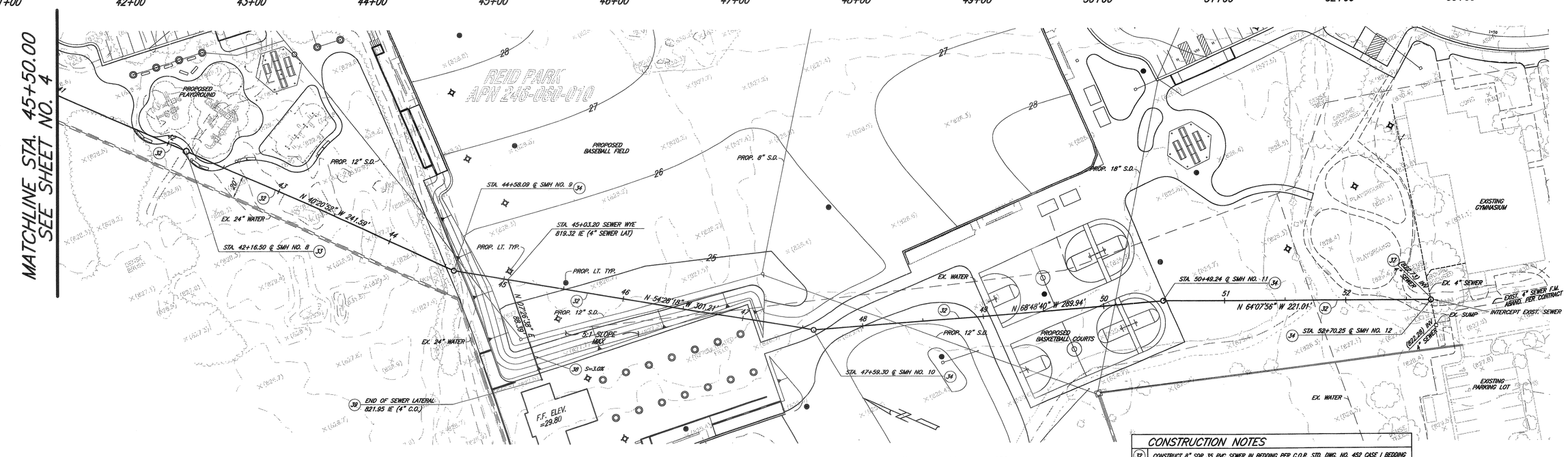

CONSTRUCTION NOTES	
32	CONSTRUCT 8" SDR 35 PVC SEWER IN BEDDING PER C.O.R. STD. DWG. NO. 452 CASE I BEDDING
34	CONSTRUCT 4' DIAMETER MANHOLE PER C.O.R. STD. DWG. NO. 500
37	JOIN EXISTING 4" SEWER
38	CONSTRUCT 4" PVC SDR 35 SEWER LATERAL PER C.O.R. STD. DWG. NO. 582 IN CASE I BEDDING
39	CONSTRUCT SEWER CLEANOUT PER C.O.R. STD. DWG. NO. 560

PWOG-0234

PUBLIC UTILITIES-ELECTRIC DIVISION		PUBLIC UTILITIES-WATER DIVISION	
APPOVED BY	DATE	APPOVED BY MW McCall	DATE 5/22/06

Underground Service Alert
CALL BEFORE YOU DIG
Call: TOLL FREE
1-800
227-2600
TWO WORKING DAYS BEFORE YOU DIG

PRIVATE ENGINEERING NOTE

CONSTRUCTION CONTRACTOR AGREES THAT IN ACCORDANCE WITH GENERALLY ACCEPTED CONSTRUCTION PRACTICES, CONSTRUCTION CONTRACTOR WILL BE REQUIRED TO ASSUME SOLE AND COMPLETE RESPONSIBILITY FOR JOB SITE CONDITIONS DURING THE COURSE OF CONSTRUCTION OF THE PROJECT, INCLUDING THE SAFETY OF ALL PERSONS AND PROPERTY THAT THIS REQUIREMENT SHALL BE MADE TO APPLY CONTINUOUSLY AND NOT BE LIMITED TO NORMAL WORKING HOURS, AND CONSTRUCTION CONTRACTOR FURTHER AGREES TO DEFEND, INDEMNIFY AND HOLD DESIGN PROFESSIONAL HARMLESS FROM ANY AND ALL LIABILITY, REAL OR ALLEGED, IN CONNECTION WITH THE PERFORMANCE OF WORK ON THIS PROJECT, EXCEPTING LIABILITY ARISING FROM THE SOLE NEGLIGENCE OF DESIGN PROFESSIONAL.

Plans Prepared Under Supervision Of
ARMSTRONG & BROOKS CONSULTING ENGINEERS
1630 CONSUMER CIRCLE, UNIT "B"
CORONA, CALIFORNIA 92880
VOICE: (951) 372-8400; FAX: (951) 372-8490
WILLIAM D. BROOKS — Date 5.16.06
R.C.E. No. C53114 — Expires 6/30/07

BENCHMARK: K7-B2
COUNTY SURVEYOR'S BRASS MONUMENT WELL AT THE CENTERLINE INTERSECTION OF NORTH MAIN STREET AND PLACENTIA LANE, ADJUSTED 1971,
ELEV. 833.594

MARK	REVISIONS	APPR.	DATE

DESIGNED BY CRV DRAWN BY CRV CHECKED BY WDB

CITY OF RIVERSIDE, CALIFORNIA
PUBLIC WORKS DEPARTMENT

APPROVED BY	BY	DATE
PRINCIPAL ENGINEER		
PARK DEPARTMENT		6/22/06
~~TRAFFIC DIVISION~~		
~~STREET SERVICES~~		

APPROVED BY — CITY ENGINEER
DATE 5/22/06

CITY OF RIVERSIDE
REID PARK
SEWER IMPROVEMENT PLANS
ON-SITE SEWER
STA 41+00 – STA 52+70.68

ACCOUNT NO. S-1967
SHEET 4 OF 4
HORIZ. SCALE: AS SHOWN VERT. SCALE: AS SHOWN

2/2

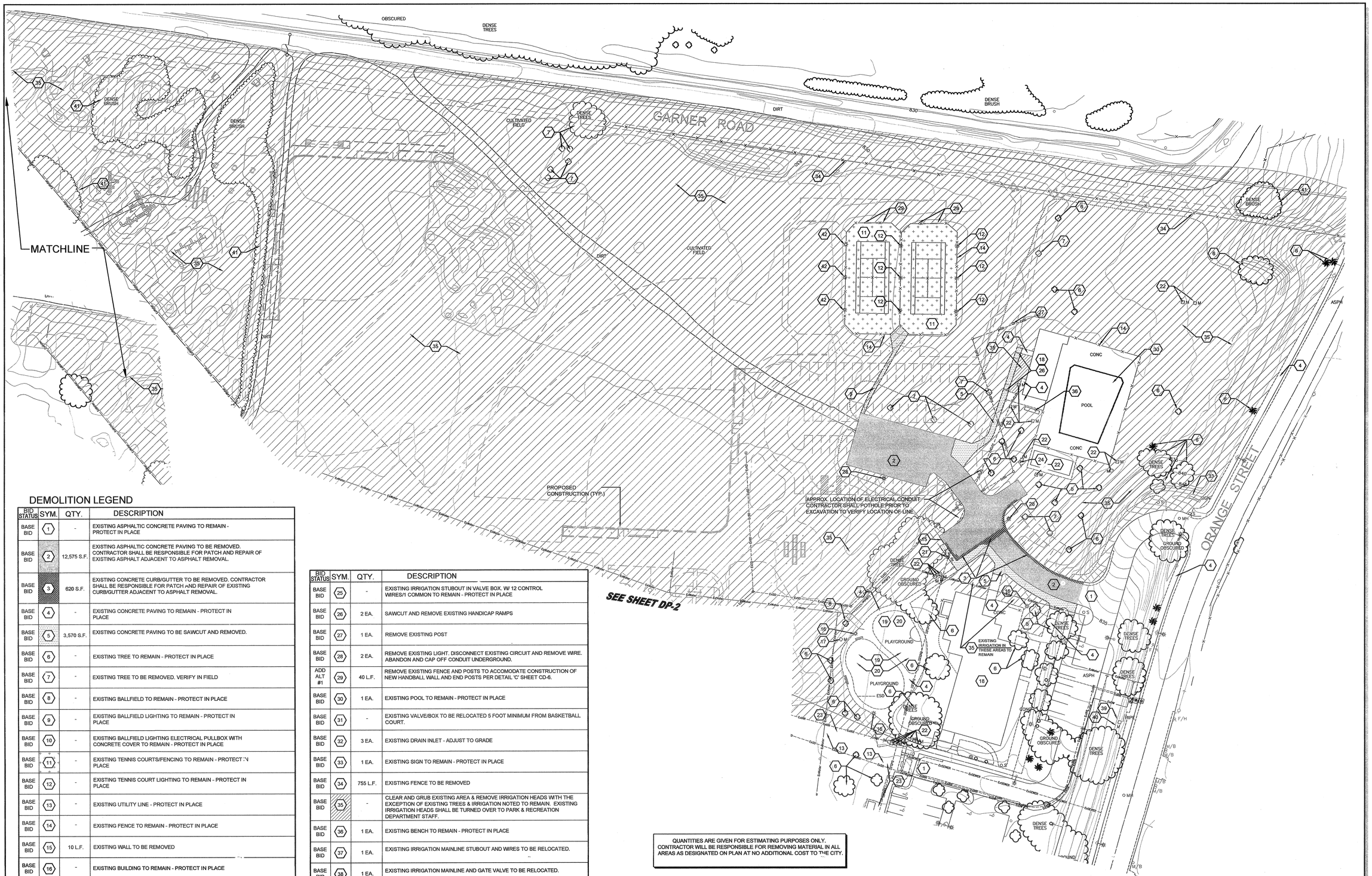

DEMOLITION LEGEND

BID STATUS	SYM.	QTY.	DESCRIPTION
BASE BID	1	-	EXISTING ASPHALTIC CONCRETE PAVING TO REMAIN - PROTECT IN PLACE
BASE BID	2	12,575 S.F.	EXISTING ASPHALTIC CONCRETE PAVING TO BE REMOVED. CONTRACTOR SHALL BE RESPONSIBLE FOR PATCH AND REPAIR OF EXISTING ASPHALT ADJACENT TO ASPHALT REMOVAL.
BASE BID	3	620 S.F.	EXISTING CONCRETE CURB/GUTTER TO BE REMOVED. CONTRACTOR SHALL BE RESPONSIBLE FOR PATCH AND REPAIR OF EXISTING CURB/GUTTER ADJACENT TO ASPHALT REMOVAL.
BASE BID	4	-	EXISTING CONCRETE PAVING TO REMAIN - PROTECT IN PLACE
BASE BID	5	3,570 S.F.	EXISTING CONCRETE PAVING TO BE SAWCUT AND REMOVED.
BASE BID	6	-	EXISTING TREE TO REMAIN - PROTECT IN PLACE
BASE BID	7	-	EXISTING TREE TO BE REMOVED. VERIFY IN FIELD
BASE BID	8	-	EXISTING BALLFIELD TO REMAIN - PROTECT IN PLACE
BASE BID	9	-	EXISTING BALLFIELD LIGHTING TO REMAIN - PROTECT IN PLACE
BASE BID	10	-	EXISTING BALLFIELD LIGHTING ELECTRICAL PULLBOX WITH CONCRETE COVER TO REMAIN - PROTECT IN PLACE
BASE BID	11	-	EXISTING TENNIS COURTS/FENCING TO REMAIN - PROTECT IN PLACE
BASE BID	12	-	EXISTING TENNIS COURT LIGHTING TO REMAIN - PROTECT IN PLACE
BASE BID	13	-	EXISTING UTILITY LINE - PROTECT IN PLACE
BASE BID	14	-	EXISTING FENCE TO REMAIN - PROTECT IN PLACE
BASE BID	15	10 L.F.	EXISTING WALL TO BE REMOVED
BASE BID	16	-	EXISTING BUILDING TO REMAIN - PROTECT IN PLACE
BASE BID	17	-	EXISTING LIGHTING ELECTRICAL PULLBOX WITH CONCRETE COVER TO REMAIN - PROTECT IN PLACE
BASE BID	18	-	EXISTING BUILDING TO REMAIN - PROTECT IN PLACE
BASE BID	19	-	EXISTING PLAY AREA AND EQUIPMENT TO REMAIN - PROTECT IN PLACE
BASE BID	20	5660 SF	REMOVE/REPLACE EXISTING RUBBER SURFACING
BASE BID	21	1 EA.	EXISTING HANDICAP STALL SIGN TO BE REMOVED.
BASE BID	22	-	EXISTING VALVE/BOX TO REMAIN - PROTECT IN PLACE
BASE BID	23	-	EXISTING IRRIGATION TO REMAIN - PROTECT IN PLACE
BASE BID	24	-	EXISTING IRRIGATION VALVE BOX TO REMAIN - PROTECT IN PLACE
BASE BID	25	-	EXISTING IRRIGATION STUBOUT IN VALVE BOX, W/ 12 CONTROL WIRES/1 COMMON TO REMAIN - PROTECT IN PLACE
BASE BID	26	2 EA.	SAWCUT AND REMOVE EXISTING HANDICAP RAMPS
BASE BID	27	1 EA.	REMOVE EXISTING POST
BASE BID	28	2 EA.	REMOVE EXISTING LIGHT. DISCONNECT EXISTING CIRCUIT AND REMOVE WIRE. ABANDON AND CAP OFF CONDUIT UNDERGROUND.
ADD ALT #1	29	40 L.F.	REMOVE EXISTING FENCE AND POSTS TO ACCOMODATE CONSTRUCTION OF NEW HANDBALL WALL AND END POSTS PER DETAIL 'C' SHEET CD-6.
BASE BID	30	1 EA.	EXISTING POOL TO REMAIN - PROTECT IN PLACE
BASE BID	31	-	EXISTING VALVE/BOX TO BE RELOCATED 5 FOOT MINIMUM FROM BASKETBALL COURT.
BASE BID	32	3 EA.	EXISTING DRAIN INLET - ADJUST TO GRADE
BASE BID	33	1 EA.	EXISTING SIGN TO REMAIN - PROTECT IN PLACE
BASE BID	34	755 L.F.	EXISTING FENCE TO BE REMOVED
BASE BID	35	-	CLEAR AND GRUB EXISTING AREA & REMOVE IRRIGATION HEADS WITH THE EXCEPTION OF EXISTING TREES & IRRIGATION NOTED TO REMAIN. EXISTING IRRIGATION HEADS SHALL BE TURNED OVER TO PARK & RECREATION DEPARTMENT STAFF.
BASE BID	36	1 EA.	EXISTING BENCH TO REMAIN - PROTECT IN PLACE
BASE BID	37	1 EA.	EXISTING IRRIGATION MAINLINE STUBOUT AND WIRES TO BE RELOCATED.
BASE BID	38	1 EA.	EXISTING IRRIGATION MAINLINE AND GATE VALVE TO BE RELOCATED.
BASE BID	39	1 EA.	EXISTING DOMESTIC POINT OF CONNECTION AND BACKFLOW PREVENTER TO REMAIN. PROTECT IN PLACE.
BASE BID	40	1 EA.	EXISTING IRRIGATION POINT OF CONNECTION AND BACKFLOW PREVENTER TO REMAIN. PROTECT IN PLACE.
BASE BID	41	-	EXISTING BRUSH TO BE REMOVED. VERIFY IN FIELD.
BASE BID	42	3 EA.	SAWCUT EXISTING COURT AND REMOVE LIGHT POLES FOR NEW REPLACEMENT DUAL FIXTURE POLES.

---ExElec— EXISTING ELECTRICAL
---ExIrr— EXISTING IRRIGATION
---ExSD— EXISTING STORM DRAIN
---ExSewer— EXISTING SEWER
---ExWater— EXISTING WATER

PROTECT IN PLACE UNLESS OTHERWISE NOTED ON PLAN.

QUANTITIES ARE GIVEN FOR ESTIMATING PURPOSES ONLY. CONTRACTOR WILL BE RESPONSIBLE FOR REMOVING MATERIAL IN ALL AREAS AS DESIGNATED ON PLAN AT NO ADDITIONAL COST TO THE CITY.

TEMPORARY CONSTRUCTION FENCING

CONTRACTOR SHALL INSTALL TEMPORARY CONSTRUCTION FENCE PER SPECIFICATIONS AROUND ALL AREAS OF CONSTRUCTION WORK. EXACT LOCATION SHALL BE COORDINATED WITH CITY AND LANDSCAPE ARCHITECT PRIOR TO INSTALLATION. INSTALLATION OF ENTRY/EXIT GATES SHALL BE INCLUDED.

DEMOLITION NOTES

1. CONTRACTOR SHALL VERIFY BURIAL DEPTH OF ALL EXISTING IRRIGATION LATERAL LINES, VALVES, MAINLINE, ETC. PRIOR TO START OF CONSTRUCTION. THE CITY HAS NO ACCURATE AS-BUILT INFORMATION. CONTRACTOR SHALL REPLACE, AT NO COST TO THE CITY, ALL IRRIGATION APPURTENANCES DAMAGED DURING CONSTRUCTION.
2. CONTRACTOR SHALL "POT HOLE" ALL EXISTING UTILITIES INCLUDING ELECTRICAL, SEWER, STORM DRAIN AND WATER.

RHA
LANDSCAPE ARCHITECTS PLANNERS, INC.
3612 MISSION INN AVE
RIVERSIDE, CALIFORNIA 92501
LIC. #1512
PH. (951) 781-1930
FAX (951) 686-8091

© R.H.A. Landscape Architects-Planners, Inc. expressly reserves its common law copyright and other property rights in these plans. These plans are not to be reproduced, changed or copied in any form or manner whatsoever, nor are they to be assigned to any third party without first obtaining the express written permission and consent of R.H.A. Landscape Architects-Planners, Inc.

CLIENT:
THE CITY OF RIVERSIDE
PARK AND RECREATION DEPT.
3900 Main Street
Riverside, California 92522

PROJECT:
Reid Park Expansion
Orange St. and Garner Rd.

REVISIONS	DATE	BY

LICENSED LANDSCAPE ARCHITECT
DOUGLAS GRAHAM NO. 2798
Signature
11/30/09
Date
STATE OF CALIFORNIA

SHEET TITLE
DEMOLITION PLAN

DESIGNED	MH
DRAWN	MH
CHECKED	DG
DATE	11-9-05
SCALE	PER PLAN
JOB NO.	03111

SHEET
DP-1
1 OF 19 SHEETS

[One Inch on Original Sheet] Drawing File: N:\Projects\03proj\03111 Reid Park Expansion\Auto\CADR\RA.dwg\CCP\Field Construction Set 08-30-06 03111 DP Sep 11, 2009 - 10:38am

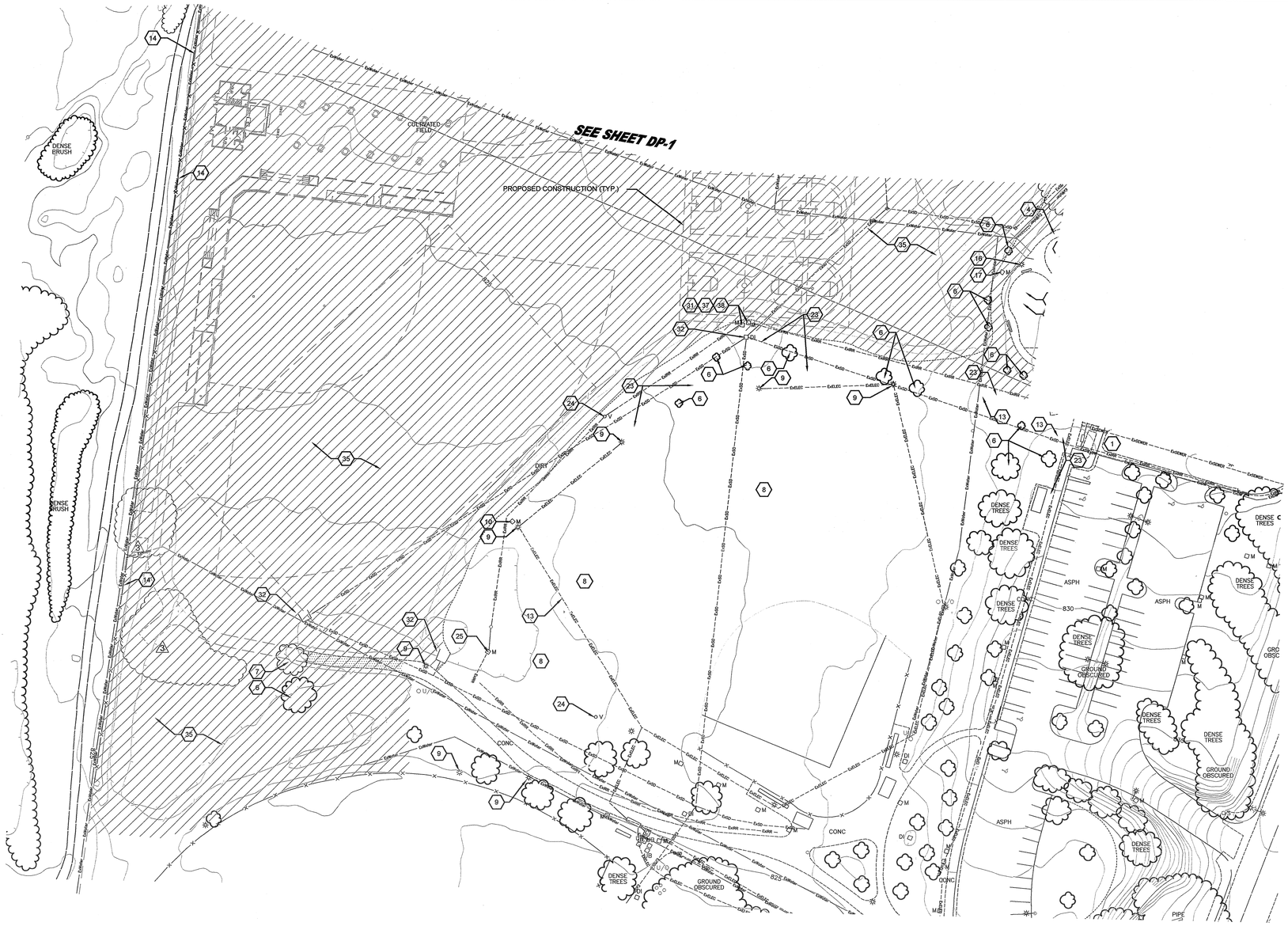

DEMOLITION LEGEND

BID STATUS	SYM.	QTY.	DESCRIPTION
BASE BID	1	-	EXISTING ASPHALTIC CONCRETE PAVING TO REMAIN - PROTECT IN PLACE
BASE BID	2	12,575 S.F.	EXISTING ASPHALTIC CONCRETE PAVING TO BE REMOVED. CONTRACTOR SHALL BE RESPONSIBLE FOR PATCH AND REPAIR OF EXISTING ASPHALT ADJACENT TO ASPHALT REMOVAL.
BASE BID	3	620 S.F.	EXISTING CONCRETE CURB/GUTTER TO BE REMOVED. CONTRACTOR SHALL BE RESPONSIBLE FOR PATCH AND REPAIR OF EXISTING CURB/GUTTER ADJACENT TO ASPHALT REMOVAL.
BASE BID	4	-	EXISTING CONCRETE PAVING TO REMAIN - PROTECT IN PLACE
BASE BID	5	3,570 S.F.	EXISTING CONCRETE PAVING TO BE SAWCUT AND REMOVED.
BASE BID	6	-	EXISTING TREE TO REMAIN - PROTECT IN PLACE
BASE BID	7	-	EXISTING TREE TO BE REMOVED. VERIFY IN FIELD
BASE BID	8	-	EXISTING BALLFIELD TO REMAIN - PROTECT IN PLACE
BASE BID	9	-	EXISTING BALLFIELD LIGHTING TO REMAIN - PROTECT IN PLACE
BASE BID	10	-	EXISTING BALLFIELD LIGHTING ELECTRICAL PULLBOX WITH CONCRETE COVER TO REMAIN - PROTECT IN PLACE
BASE BID	11	-	EXISTING TENNIS COURTS/FENCING TO REMAIN - PROTECT IN PLACE
BASE BID	12	-	EXISTING TENNIS COURT LIGHTING TO REMAIN - PROTECT IN PLACE
BASE BID	13	-	EXISTING UTILITY LINE - PROTECT IN PLACE
BASE BID	14	-	EXISTING FENCE TO REMAIN - PROTECT IN PLACE
BASE BID	15	10 L.F.	EXISTING WALL TO BE REMOVED
BASE BID	16	-	EXISTING BUILDING TO REMAIN - PROTECT IN PLACE
BASE BID	17	-	EXISTING LIGHTING ELECTRICAL PULLBOX WITH CONCRETE COVER TO REMAIN - PROTECT IN PLACE
BASE BID	18	-	EXISTING BUILDING TO REMAIN - PROTECT IN PLACE
BASE BID	19	-	EXISTING PLAY AREA AND EQUIPMENT TO REMAIN - PROTECT IN PLACE
BASE BID	20	5660 SF	REMOVE/REPLACE EXISTING RUBBER SURFACING
BASE BID	21	1 EA.	EXISTING HANDICAP STALL SIGN TO BE REMOVED.
BASE BID	22	-	EXISTING VALVE/BOX TO REMAIN - PROTECT IN PLACE
BASE BID	23	-	EXISTING IRRIGATION TO REMAIN - PROTECT IN PLACE
BASE BID	24	-	EXISTING IRRIGATION VALVE BOX TO REMAIN - PROTECT IN PLACE
BASE BID	25	-	EXISTING IRRIGATION STUBOUT IN VALVE BOX. W/ 12 CONTROL WIRES/1 COMMON TO REMAIN - PROTECT IN PLACE
BASE BID	26	2 EA.	SAWCUT AND REMOVE EXISTING HANDICAP RAMPS
BASE BID	27	1 EA.	REMOVE EXISTING POST
BASE BID	28	2 EA.	REMOVE EXISTING LIGHT. DISCONNECT EXISTING CIRCUIT AND REMOVE WIRE. ABANDON AND CAP OFF CONDUIT UNDERGROUND.
ADD ALT #1	29	40 L.F.	REMOVE EXISTING FENCE AND POSTS TO ACCOMODATE CONSTRUCTION OF NEW HANDBALL WALL AND END POSTS PER DETAIL 'C' SHEET CD-6.
BASE BID	30	1 EA.	EXISTING POOL TO REMAIN - PROTECT IN PLACE
BASE BID	31	-	EXISTING VALVE/BOX TO BE RELOCATED 5 FOOT MINIMUM FROM BASKETBALL COURT.
BASE BID	32	3 EA.	EXISTING DRAIN INLET - ADJUST TO GRADE
BASE BID	33	1 EA.	EXISTING SIGN TO REMAIN - PROTECT IN PLACE
BASE BID	34	755 L.F.	EXISTING FENCE TO BE REMOVED
BASE BID	35	-	CLEAR AND GRUB EXISTING AREA & REMOVE IRRIGATION HEADS WITH THE EXCEPTION OF EXISTING TREES & IRRIGATION NOTED TO REMAIN. EXISTING IRRIGATION HEADS SHALL BE TURNED OVER TO PARK & RECREATION DEPARTMENT STAFF.
BASE BID	36	1 EA.	EXISTING BENCH TO REMAIN - PROTECT IN PLACE
BASE BID	37	1 EA.	EXISTING IRRIGATION MAINLINE STUBOUT AND WIRES TO BE RELOCATED.
BASE BID	38	1 EA.	EXISTING IRRIGATION MAINLINE AND GATE VALVE TO BE RELOCATED.
BASE BID	39	1 EA.	EXISTING DOMESTIC POINT OF CONNECTION AND BACKFLOW PREVENTER TO REMAIN. PROTECT IN PLACE.
BASE BID	40	1 EA.	EXISTING IRRIGATION POINT OF CONNECTION AND BACKFLOW PREVENTER TO REMAIN. PROTECT IN PLACE.
BASE BID	41	-	EXISTING BRUSH TO BE REMOVED. VERIFY IN FIELD.
BASE BID	42	3 EA.	SAWCUT EXISTING COURT AND REMOVE LIGHT POLES FOR NEW REPLACEMENT DUAL FIXTURE POLES.

QUANTITIES ARE GIVEN FOR ESTIMATING PURPOSES ONLY. CONTRACTOR WILL BE RESPONSIBLE FOR REMOVING MATERIAL IN ALL AREAS AS DESIGNATED ON PLAN AT NO ADDITIONAL COST TO THE CITY.

TEMPORARY CONSTRUCTION FENCING

CONTRACTOR SHALL INSTALL TEMPORARY CONSTRUCTION FENCE PER SPECIFICATIONS AROUND ALL AREAS OF CONSTRUCTION WORK. EXACT LOCATION SHALL BE COORDINATED WITH CITY AND LANDSCAPE ARCHITECT PRIOR TO INSTALLATION. INSTALLATION OF ENTRY/EXIT GATES SHALL BE INCLUDED.

DEMOLITION NOTES

1. CONTRACTOR SHALL VERIFY BURIAL DEPTH OF ALL EXISTING IRRIGATION LATERAL LINES, VALVES, MAINLINE, ETC. PRIOR TO START OF CONSTRUCTION. THE CITY HAS NO ACCURATE AS-BUILT INFORMATION. CONTRACTOR SHALL REPLACE, AT NO COST TO THE CITY, ALL IRRIGATION APPURTENANCES DAMAGED DURING CONSTRUCTION.

2. CONTRACTOR SHALL "POT HOLE" ALL EXISTING UTILITIES INCLUDING ELECTRICAL, SEWER, STORM DRAIN AND WATER.

- - - - EXELEC - - - EXISTING ELECTRICAL
- - - - EXIRR - - - EXISTING IRRIGATION
- - - - EXSD - - - EXISTING STORM DRAIN
- - - - EXSEWER - - - EXISTING SEWER
—— EXWATER —— EXISTING WATER

PROTECT IN PLACE UNLESS OTHERWISE NOTED ON PLAN.

0' 40' 80' 120'

RHA LANDSCAPE ARCHITECTS PLANNERS, INC.
3612 MISSION INN AVE
RIVERSIDE, CALIFORNIA 92501
LIC. #1512
PH. (951) 781-1930
FAX (951) 686-8091

© R.H.A. Landscape Architects–Planners, Inc. expressly reserves its common law copyright and other property rights in these plans. These plans are not to be reproduced, changed or copied in any form or manner whatsoever, nor are they to be assigned to any third party without first obtaining the express written permission.

CLIENT:
THE CITY OF RIVERSIDE
PARK AND RECREATION DEPT.
3900 Main Street
Riverside, California 92522

PROJECT:
Reid Park Expansion
Orange St. and Garner Rd.

REVISIONS	DATE	BY
3 CONFORMED SET	9/5/06	MH

LICENSED LANDSCAPE ARCHITECT
DOUGLAS GROVE, REG. 2798
SIGNATURE 11/28/06
DATE
STATE OF CALIFORNIA

SHEET TITLE
DEMOLITION PLAN

DESIGNED	MH
DRAWN	MH
CHECKED	DG
DATE	11–9–05
SCALE	PER PLAN
JOB NO.	03111

SHEET
DP-2
2 OF 19 SHEETS

[One Inch on Original Sheet] Drawing File: N:\Projects\03jobs\03111 Reid Park Expansion\AutoCAD\RHA dwgs\CD\Field Construction Set.08-30-06.03111 DP Sep 11, 2006 - 10:28am

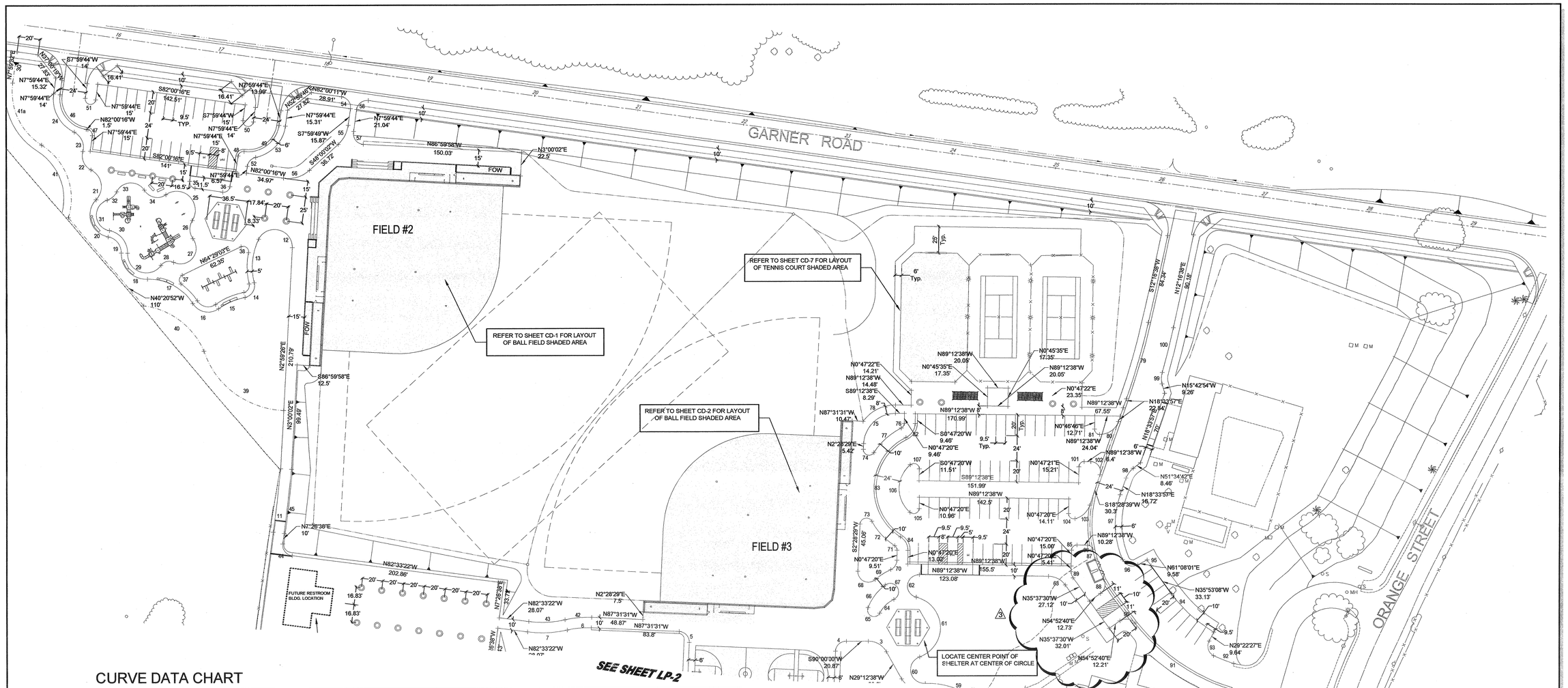

CURVE DATA CHART

#	RADIUS	CHORD BEARING	LENGTH
1	60.00'	N68°55'51"W	49.53'
2	20.00'	N59°36'19"W	21.22'
3	20.00'	N59°36'19"W	21.22'
4	10.00'	N47°28'29"E	15.71'
5	10.00'	N42°31'24"W	15.71'
6	90.00'	N84°56'58"E	23.64'
7	110.00'	N87°26'02"E	38.44'
8	80.00'	N35°41'37"W	120.46'
9	100.00'	N1°48'19"W	32.29'
10	100.00'	N1°48'19"W	32.29'
11	1547.18'	N6°18'53"E	61'
12	16.35'	N75°30'52"W	44.75'
13	60.46'	N5°59'19"E	42.37'
14	11.49'	N32°08'19"E	18.54'
15	66.69'	N66°37'58"E	27.31'
16	17.43'	N78°39'34"W	28.25'
17	50.00'	N62°15'47"W	52.43'
18	24.00'	N45°02'23"W	39.60'
19	15.00'	N38°33'24"W	21.35'
20	21.00'	N17°46'09"W	45.13'
21	18.00'	N9°32'22"W	33.51'
22	15.00'	N23°34'35"W	20.58'
23	15.67'	N24°01'30"W	21.74'
24	35.00'	N27°53'27"W	43.84'
25	18.00'	N46°01'43"W	49.65'
26	15.00'	N1°57'00"W	18.30'
27	15.00'	N39°50'12"E	40.18'
28	10.00'	N76°45'46"E	13.89'
29	18.00'	N70°24'31"W	45.64'
30	21.00'	N38°33'24"W	29.89'
31	15.00'	N3°49'49"W	39.54'
32	15.00'	N48°21'13"E	12.21'
33	15.00'	N86°34'38"E	32.23'
34	15.00'	N78°27'49"W	24.39'
35	6.00'	N37°00'16"W	9.42'
36	6.00'	N52°59'44"E	9.42'
37	5.00'	N7°49'45"E	9.92'
38	5.00'	N51°39'43"W	11.14'
39	84.00'	N52°58'29"W	99.80'
40	72.00'	N53°33'54"W	76.28'
41	60.00'	N19°47'08"W	78.91'
41a	60.00'	N25°29'43"W	66.46'
42	100.00'	N84°56'58"E	26.27'
43	100.00'	N87°26'02"E	34.94'
44	10.00'	N37°33'22"W	15.71'
45	1548.05'	N6°18'03"E	61.78'
46	29.00'	N37°00'16"W	45.55'
47	5.00'	N37°00'16"W	7.85'
48	5.00'	N52°59'44"E	7.85'
49	29.00'	N52°59'03"E	45.56'
50	5.00'	N82°00'16"W	15.71'
51	5.00'	N82°00'16"W	15.71'
52	10.00'	N43°15'35"E	12.31'
53	35.00'	N43°14'55"E	43.10'
54	10.00'	N37°00'11"W	15.71'
55	30.00'	N27°59'56"E	20.95'
56	30.00'	N72°59'53"E	26.18'
57	10.00'	N37°00'11"W	17.45'
58	10.00'	N52°59'49"E	15.71'
59	66.00'	N68°55'51"W	54.48'
60	13.00'	N11°39'05"W	36.72'
61	30.00'	N53°08'57"W	75.76'
62	10.85'	N7°41'27"E	31.48'
63	20.00'	N62°25'04"W	18.7'
64	30.00'	N45°44'53"E	19.14'
65	6.30'	N65°17'23"W	19.18'
66	50.00'	N34°43'30"E	27.54'
67	8.01'	N31°14'14"W	26.63'
68	10.00'	N64°16'01"W	23.30'
69	60.00'	N57°27'32"E	17.73'
70	10.00'	N33°21'28"E	11.37'
71	5.00'	N28°23'22"W	5.09'
72	64.58'	N43°12'24"W	32.37'
73	6.03'	N76°48'53"E	15.64'
74	5.52'	N72°37'24"W	14.47'
75	30.00'	N46°37'55"E	46.24'
76	5.00'	N32°09'55"W	5.48'
77	64.58'	N47°54'36"E	35.24'
78	38.00'	N63°35'31"E	36.08'
79	688'	N15°25'18"E	75.51'
80	18.00'	N54°40'39"E	22.69'
81	5.00'	N43°41'42"W	7.76'
82	15.00'	N32°09'55"E	16.43'
83	54.58'	N2°59'13"E	115.37'
84	15.00'	N28°23'22"W	15.28'
85	5.00'	N45°47'21"E	7.85'
86	5.00'	N50°50'07"W	6.7'
87	112.00'	N14°55'12"W	9.62'
88	10.00'	N16°04'45"E	13.54'
89	10.00'	N17°25'05"W	6.36'
90	10.00'	N81°00'50"W	15.40'
91	174.63'	N55°37'19"W	114.09'
92	148.00'	N68°50'09"W	20.9'
93	10.00'	N17°42'13"W	16.43'
94	128.00'	N48°15'21"W	55.27'
95	68.00'	N33°06'15"W	6.60'
96	10.00'	N70°49'22"W	16.77'
97	88.00'	N2°06'23"W	63.5'
98	20.00'	N35°04'40"E	11.53'
99	20.00'	N0°02'40"E	11.00'
100	712.00'	N14°02'27"E	43.83'
101	5.00'	N45°57'15"E	7.88'
102	9.50'	N35°22'00"W	17.86'
103	20.00'	N47°20'21"E	20.15'
104	5.00'	N51°30'18"W	9.13'
105	5.00'	N66°26'52"E	11.46'
106	30.58'	N0°D09'05"E	51.29'
107	5.00'	N65°30'27"W	11.57'

0' 40' 80' 120'

RHA LANDSCAPE ARCHITECTS PLANNERS, INC.
3612 MISSION INN AVE
RIVERSIDE, CALIFORNIA
92501
LIC. #1512
PH. (951) 781-1930
FAX (951) 686-8091

© R.H.A. Landscape Architects/Planners, Inc. expressly reserves its common law copyright and other property rights in these plans. These plans are not to be reproduced, changed or copied in any form or manner whatsoever, nor are they to be assigned to any third party without first obtaining the express written permission and consent of R.H.A. Landscape Architects/Planners, Inc.

CLIENT:
THE CITY OF RIVERSIDE
PARK AND RECREATION DEPT.
3900 Main Street
Riverside, California 92522

PROJECT:
Reid Park Expansion
Orange St. and Garner Rd.

REVISIONS	DATE	BY
1 HC STALL	07/27/06	MH
3 CONFORMED SET	9/5/06	MH

LICENSED LANDSCAPE ARCHITECT
SUNDAY GROVE
Signature
Registered Date
STATE OF CALIFORNIA

SHEET TITLE
LAYOUT PLAN

DESIGNED	MH
DRAWN	MH
CHECKED	DG
DATE	11-9-05
SCALE	PER PLAN
JOB NO.	03111

SHEET
LP-1
3 OF 19 SHEETS

[One Inch on Original Sheet] Drawing File: N:\Projects\03p\03111 Reid Park Expansion\AutoCAD\RHA \layg\CD\Field Construction Set 08-30-06 03111.LP Sep 11, 2006 - 10:25am

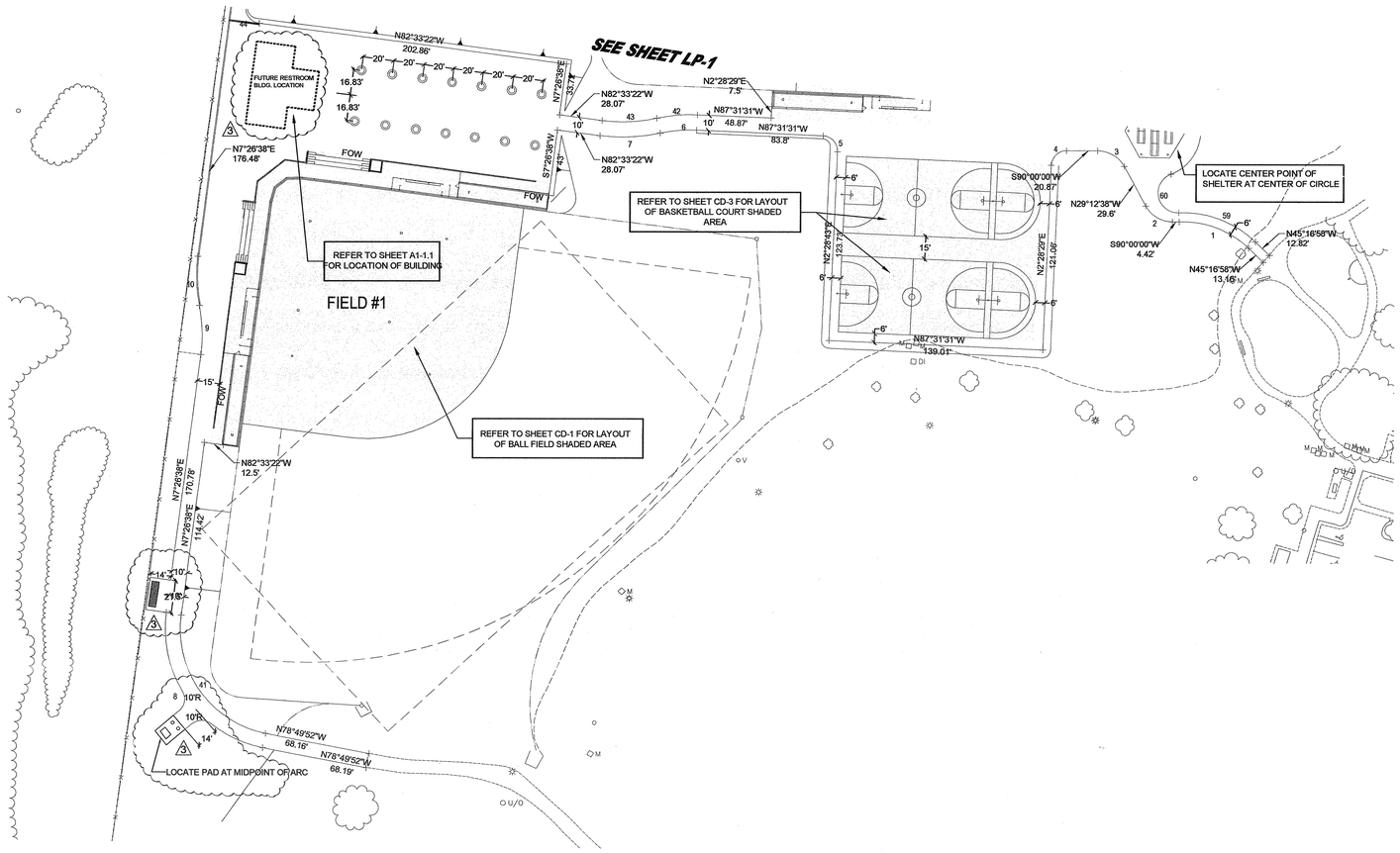

CURVE DATA CHART

#	RADIUS	CHORD BEARING	LENGTH
1	60.00'	N68°55'51"W	49.53'
2	20.00'	N59°36'19"W	21.22'
3	20.00'	N59°36'19"W	21.22'
4	10.00'	N47°28'29"E	15.71'
5	10.00'	N42°31'24"W	15.71'
6	90.00'	N84°56'58"E	23.64'
7	110.00'	N87°26'02"E	38.44'
8	80.00'	N35°41'37"W	120.46'
9	100.00'	N1°48'19"W	32.29'
10	100.00'	N1°48'19"W	32.29'
11	1547.18'	N6°18'53"E	61'
12	16.35'	N75°30'52"W	44.75'
13	60.46'	N5°59'19"E	42.37'
14	11.49'	N32°08'19"E	18.54'
15	66.69'	N66°37'58"E	27.31'
16	17.43'	N78°39'34"W	28.25'
17	50.00'	N62°15'47"W	52.43'
18	24.00'	N45°02'23"W	39.60'
19	15.00'	N38°33'24"W	21.35'
20	21.00'	N17°46'09"W	45.13'
21	18.00'	N9°32'22"W	33.51'
22	15.00'	N23°34'35"W	20.58'
23	15.67'	N24°01'30"W	21.74'
24	35.00'	N27°53'27"W	43.84'
25	18.00'	N46°01'43"W	49.65'
26	15.00'	N1°57'00"W	18.30'
27	15.00'	N39°50'12"E	40.18'
28	10.00'	N76°45'46"E	13.89'
29	18.00'	N70°24'31"W	45.64'
30	21.00'	N38°33'24"W	29.89'
31	15.00'	N3°49'49"W	39.54'
32	15.00'	N48°21'13"E	12.21'
33	15.00'	N86°34'38"E	32.23'
34	15.00'	N78°27'49"W	24.39'
35	6.00'	N37°00'16"W	9.42'
36	6.00'	N52°59'44"E	9.42'
37	5.00'	N7°49'45"E	9.92'
38	5.00'	N51°39'43"W	11.14'
39	84.00'	N52°58'29"W	99.80'
40	72.00'	N53°33'54"W	76.28'
41	60.00'	N19°47'08"W	78.91'
41a	60.00'	N25°29'43"W	66.46'
42	100.00'	N84°56'58"E	26.27'
43	100.00'	N87°26'02"E	34.94'
44	10.00'	N37°33'22"W	15.71'
45	1548.05'	N6°18'03"E	61.78'
46	29.00'	N37°00'16"W	45.55'
47	5.00'	N37°00'16"W	7.85'
48	5.00'	N52°59'44"E	7.85'

#	RADIUS	CHORD BEARING	LENGTH
49	29.00'	N52°59'03"E	45.56'
50	5.00'	N82°00'16"W	15.71'
51	5.00'	N82°00'16"W	15.71'
52	10.00'	N43°15'35"E	12.31'
53	35.00'	N43°14'55"E	43.10'
54	10.00'	N37°00'11"W	15.71'
55	30.00'	N27°59'56"E	20.95'
56	30.00'	N72°59'53"E	26.18'
57	10.00'	N37°00'11"W	17.45'
58	10.00'	N52°59'49"E	15.71'
59	66.00'	N68°55'51"W	54.48'
60	13.00'	N11°39'05"W	36.72'
61	30.00'	N3°03'57"W	75.75'
62	10.85'	N7°41'27"E	31.48'
63	20.00'	N62°25'04"W	18.7'
64	30.00'	N45°44'53"E	19.14'
65	6.30'	N65°17'23"W	19.18'
66	50.00'	N37°43'30"E	27.54'
67	8.01'	N31°14'14"W	26.63'
68	10.00'	N64°16'01"W	23.30'
69	60.00'	N57°27'32"E	17.73'
70	10.00'	N33°21'28"E	11.37'
71	5.00'	N28°23'22"W	5.09'
72	64.58'	N43°12'24"W	32.37'
73	6.03'	N76°48'53"E	15.64'
74	5.52'	N72°37'24"W	14.47'
75	30.00'	N46°37'55"E	46.24'
76	5.00'	N32°09'55"W	5.48'
77	64.58'	N47°54'36"E	35.24'
78	38.00'	N63°35'31"E	36.08'
79	688'	N15°25'18"E	75.51'
80	18.00'	N54°40'39"E	22.69'
81	5.00'	N43°41'42"W	7.76'
82	15.00'	N32°09'55"E	16.43'
83	54.58'	N2°59'13"E	115.37'
84	15.00'	N28°23'22"W	15.28'
85	5.00'	N45°47'21"E	7.85'
86	5.00'	N50°50'07"W	6.7'
87	112.00'	N14°55'13"W	9.62'
88	10.00'	N16°04'45"E	13.54'
89	10.00'	N17°25'05"W	6.36'
90	10.00'	N81°00'50"W	15.40'
91	174.63'	N55°37'19"W	114.09'
92	148.00'	N68°50'03"W	20.94'
93	10.00'	N17°42'13"W	16.43'
94	128.00'	N48°15'21"W	55.27'
95	68.00'	N33°06'15"W	6.60'
96	10.00'	N70°49'22"W	16.77'
97	88.00'	N2°06'23"W	63.5'

#	RADIUS	CHORD BEARING	LENGTH
98	20.00'	N35°04'40"E	11.53'
99	20.00'	N0°02'40"E	11.00'
100	712.00'	N14°02'27"E	43.83'
101	5.00'	N45°57'15"E	7.88'
102	9.50'	N35°22'00"W	17.86'
103	20.00'	N47°20'21"E	20.15'
104	5.00'	N51°30'18"W	9.13'
105	5.00'	N66°26'52"E	11.46'
106	30.58'	N0°D09'05"E	51.29'
107	5.00'	N65°30'27"W	11.57'

0' 40' 80' 120'

RHA LANDSCAPE ARCHITECTS PLANNERS, INC.
3612 MISSION INN AVE
RIVERSIDE, CALIFORNIA 92501
LIC. #1512
PH. (951) 781-1930
FAX (951) 686-8091

© R.H.A. Landscape Architects-Planners, Inc. expressly reserves its common law copyright and other property rights in these plans. These plans are not to be reproduced, changed or copied in any form or manner whatsoever, nor are they to be assigned to any third party, without first obtaining the express written permission.

CLIENT:
THE CITY OF RIVERSIDE
PARK AND RECREATION DEPT.
3900 Main Street
Riverside, California 92522

PROJECT:
Reid Park Expansion
Orange St. and Garner Rd.

REVISIONS	DATE	BY
3 CONFORMED SET	9/5/06	MH

LICENSED LANDSCAPE ARCHITECT
DOUGLAS GROVE No. 2499
Signature is valid without embossed seal
STATE OF CALIFORNIA

SHEET TITLE
LAYOUT PLAN

DESIGNED	MH
DRAWN	MH
CHECKED	DG
DATE	11-9-05
SCALE	PER PLAN
JOB NO.	03111

SHEET
LP-2
4 OF 19 SHEETS

[One Inch for Original Sheet] Drawing File: N:\Projects\03proj\03111 Reid Park Expansion\AutoCAD\RHA design\CD\Winfield Construction Set.08-30-06.03111 LP Sep 11, 2006 - 10:26am

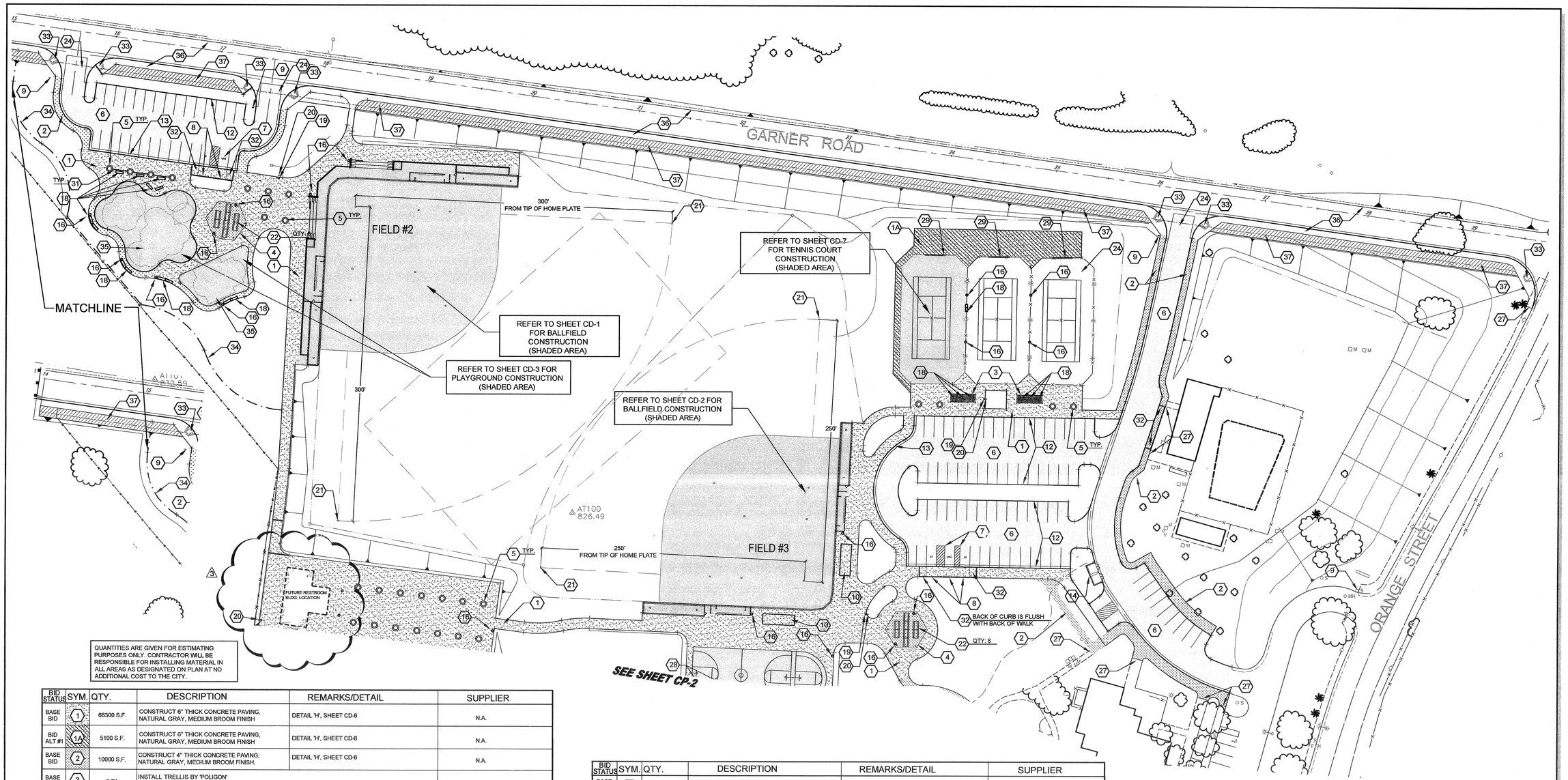

QUANTITIES ARE GIVEN FOR ESTIMATING PURPOSES ONLY. CONTRACTOR WILL BE RESPONSIBLE FOR INSTALLING MATERIAL IN ALL AREAS AS DESIGNATED ON PLAN AT NO ADDITIONAL COST TO THE CITY.

BID STATUS	SYM.	QTY.	DESCRIPTION	REMARKS/DETAIL	SUPPLIER
BASE BID	1	66300 S.F.	CONSTRUCT 6" THICK CONCRETE PAVING, NATURAL GRAY, MEDIUM BROOM FINISH	DETAIL 'H', SHEET CD-6	N.A.
BID ALT #1	1A	5100 S.F.	CONSTRUCT 6" THICK CONCRETE PAVING, NATURAL GRAY, MEDIUM BROOM FINISH	DETAIL 'H', SHEET CD-6	N.A.
BASE BID	2	10000 S.F.	CONSTRUCT 4" THICK CONCRETE PAVING, NATURAL GRAY, MEDIUM BROOM FINISH.	DETAIL 'H', SHEET CD-6	N.A.
BASE BID	3	2 EA	INSTALL TRELLIS BY 'POLIGON' STRUCTURE SHALL CONSIST OF (2) 8 FT. FLAT TRELLIS FRAME ASSEMBLIES AND (1) 8 FT. ARCH TRELLIS FRAME ASSEMBLY. THE ARCH TRELLIS SHALL BE IN THE MIDDLE. COLUMNS: "ROUND W/ ORNAMENTATION". ENTIRE STRUCTURE SHALL BE FACTORY POWDER COATED. COLOR: "EVERGREEN". CONTRACTOR SHALL TOUCH UP ALL SCRATCHES AFTER INSTALLATION WITH PAINT SUPPLIED BY MANUFACTURER.		MIRACLE PLAYGROUND SALES 800-264-7225 DETAIL 'B', SHEET CD-4
BASE BID	4	2 EA	INSTALL HEX 36 MODIFIED WITHOUT SOLID ROOF BY 'POLIGON'. ENTIRE STRUCTURE SHALL BE FACTORY POWDER COATED. COLOR: "EVERGREEN". CONTRACTOR SHALL TOUCH UP ALL SCRATCHES AFTER INSTALLATION WITH PAINT SUPPLIED BY MANUFACTURER.		MIRACLE PLAYGROUND SALES 800-264-7225 DETAIL 'A', SHEET CD-4
BASE BID	5	23 EA	INSTALL PRE-CAST CONCRETE PLANTERS BY 'QUICK CRETE' MODEL#QR-7218PR. COLOR: C1 NATURAL. TEXTURE T2, LIGHT SANDBLAST	ALL JOINTS SHALL BE CAULKED W/ SEALANT TO MATCH COLOR OF CONCRETE PLANTEF. REFER TO DETAIL 'EE', SHEET CD-5 AND GRADING PLANS FOR DRAINAGE.	QUICK CRETE PRODUCTS 951-737-6240
BASE BID	6	REFER TO GRADING PLANS	CONSTRUCT ASPHALT PAVING PER GRADING PLANS STRIPE PER PLANS AND SPECIFICATIONS	PER SPECIFICATIONS AND GRADING PLANS	N.A.
BASE BID	7	5 L.S.	PAINT DISABLED PARKING STALL STRIPING (2) VAN, (3) REGULAR	DETAIL 'A', SHEET CD-7	N.A.
BASE BID	8	5 EA	INSTALL DISABLED PARKING STALL SIGN	DETAIL 'E', SHEET CD-7	N.A.
BASE BID	9	4 EA	INSTALL DISABLED PARKING LOT SIGN	DETAIL 'B', SHEET CD-7	N.A.
BASE BID	10	2 EA	INSTALL BLEACHER PER SPECIFICATIONS	ANCHOR PER MNFR. RECOMMENDATIONS	PER SPECIFICATIONS
N.A.	11	N.A.	FUTURE RESTROOM-CONCESSION BUILDING	N.A.	N.A.
BASE BID	12	REFER TO GRADING PLANS	CONSTRUCT CONCRETE CURB	REFER TO GRADING PLANS	N.A.
BASE BID	13	REFER TO GRADING PLANS	CONSTRUCT CONCRETE CURB AND GUTTER	REFER TO GRADING PLANS	N.A.
BASE BID	14	1 EA	CONSTRUCT TRASH ENCLOSURE	DETAIL 'G', SHEET CD-6	N.A.
BASE BID	15	REFER TO GRADING PLANS	EXISTING STORM DRAIN INLET. RAISE TOP OF EXISTING CATCH BASIN TO MAINTAIN A 5:1 MAX. SLOPE FROM NEW PAVING TO TOP OF GRATE. REGRADE, ADJUST IRRIGATION, AND PLANT SOD TO MATCH EXISTING TURF.		N.A.
BASE BID	16	19 EA.	INSTALL WASTE CONTAINER BY 'QUICK CRETE' MODEL# QS-CAL2556SDW COLOR: C1, NATURAL, TEXTURE:T2, LIGHT SANDBLAST	ATTACH TO PAVING WITH ⅝"X 8" J-BOLT. SET J-BOLT IN CONCRETE PAVING DURING POUR & BOLT W.C. THROUGH DRAIN HOLE.	QUICKCRETE PRODUCTS 951-737-6240
BASE BID	17	REFER TO GRADING PLANS	EXISTING STORM DRAIN TO REMAIN PROTECT IN PLACE.	N.A.	N.A.
BASE BID	18	14 EA	INSTALL BENCH PER SPECIFICATIONS	INSTALL PER MNFR. RECOMMENDATIONS	PER SPECIFICATIONS

BID STATUS	SYM.	QTY.	DESCRIPTION	REMARKS/DETAIL	SUPPLIER
BASE BID	19	4 EA	INSTALL DRINKING FOUNTAIN BY 'MOST DEPENDABLE FOUNTAINS' MODEL #4405S DB WITH "PET FOUNTAIN"	DETAIL 'C', SHEET CD-7 COORDINATE LOCATION OF DRINKING FOUNTAIN DRAINAGE SYSTEM WITH PROJECT INSPECTOR	N.A.
BASE BID	20	4 EA	INSTALL DRINKING FOUNTAIN SUMP	DETAIL 'C', SHEET CD-7 COORDINATE LOCATION OF DRINKING FOUNTAIN DRAINAGE SYSTEM WITH PROJECT INSPECTOR	MDF 800-552-6331
BASE BID	21	6 EA	INSTALL FOUL POLE BY 'LA STEELCRAFT' MODEL #FLP-30	PER MFG. DETAILS AND RECOMMENDATIONS. INSTALL 12" WIDE CONCRETE MOW CURB AROUND ENTIRE POLE.	COAST RECREATION 949-553-8065
BASE BID	22	16 EA	INSTALL PICNIC TABLE BY 'QUICKCRETE' MODEL #Q-LBT PT"-C1-T2	DETAIL 'E', SHEET CD-6	QUICKCRETE PRODUCTS 951-737-6240
	23	NOT USED			
BASE BID	24	3 EA	CONSTRUCT DRIVE APPROACH	REFER TO GRADING PLANS	N.A.
BASE BID	25	2 EA	RESURFACE AND RESTRIPE EXISTING TENNIS COURTS PER SPECIFICATIONS	N.A.	N.A.
	26		NOT USED		
BASE BID	27	6 EA	JOIN NEW CONCRETE PAVING FLUSH WITH EXISTING CONCRETE PAVING.	DETAIL 'H', SHEET CD-6	N.A.
BASE BID	28	2 EA	CONSTRUCT BASKETBALL COURT	DETAIL 'A', SHEET CD-3	N.A.
ADD ALT #1	29	3 EA	CONSTRUCT HANDBALL WALL	DETAIL 'B', SHEET CD-6	N.A.
	30	NOT USED			
BASE BID	31	45 L.F.	CONSTRUCT TUBULAR STEEL FENCE	DETAIL 'F', SHEET CD-6	N.A.
BASE BID	32	4 EA	CONSTRUCT WHEELCHAIR RAMP	CITY OF RIVERSIDE STANDARD DRAWING NO. 304-TYPE II (MODIFIED)	N.A.
BASE BID	33	4 EA	CONSTRUCT WHEELCHAIR RAMP	CITY OF RIVERSIDE STANDARD DRAWING NO. 304-TYPE I (MODIFIED)	N.A.
BASE BID	34	475 LF	CONSTRUCT CONCRETE MOWCURB	DETAIL 'E', SHEET CD-3	N.A.
BASE BID	35	2 EA	CONSTRUCT PLAYGROUND	DETAIL 'D', SHEET CD-3	N.A.
BASE BID	36	LS	CONSTRUCT STREET IMPROVEMENTS PER STREET IMPROVEMENT PLANS	N.A.	N.A.
BASE BID	37	LS	CONSTRUCT D.G. TRAIL	DETAIL 'A', SHEET CP-2	N.A.

0' 40' 80' 120'

RHA LANDSCAPE ARCHITECTS PLANNERS, INC.
3612 MISSION INN AVE
RIVERSIDE, CALIFORNIA 92501
LIC. #1512
PH. (951) 781-1930
FAX (951) 686-8091

© R.H.A. Landscape Architects-Planners, Inc. expressly reserves its common law copyright and other property rights in these plans. These plans are not to be reproduced, changed or copied in any form or manner whatsoever, nor are they to be assigned to any third party without first obtaining the express written permission.

CLIENT:
THE CITY OF RIVERSIDE
PARK AND RECREATION DEPT.
3900 Main Street
Riverside, California 92522

PROJECT:
Reid Park Expansion
Orange St. and Garner Rd.

REVISIONS	DATE	BY
3 CONFORMED SET	9/5/06	MH

LICENSED LANDSCAPE ARCHITECT
DOUGLAS GROVE No. 2598
Signature 10/26/07
Renewal Date
Date
STATE OF CALIFORNIA

SHEET TITLE
CONSTRUCTION PLAN

DESIGNED	MH/DG
DRAWN	MH/DG
CHECKED	DG
DATE	11-9-05
SCALE	PER PLAN
JOB NO.	03111

SHEET
CP-1
5 OF 19 SHEETS

[One Inch on Original Sheet] Drawing File: N:\Projects\03pr\03111 Reid Park Expansion\AutoCAD\RHA dwg\CD's\Field Construction Set 08-30-06\03111 CP Sep 11, 2006 - 10:54am

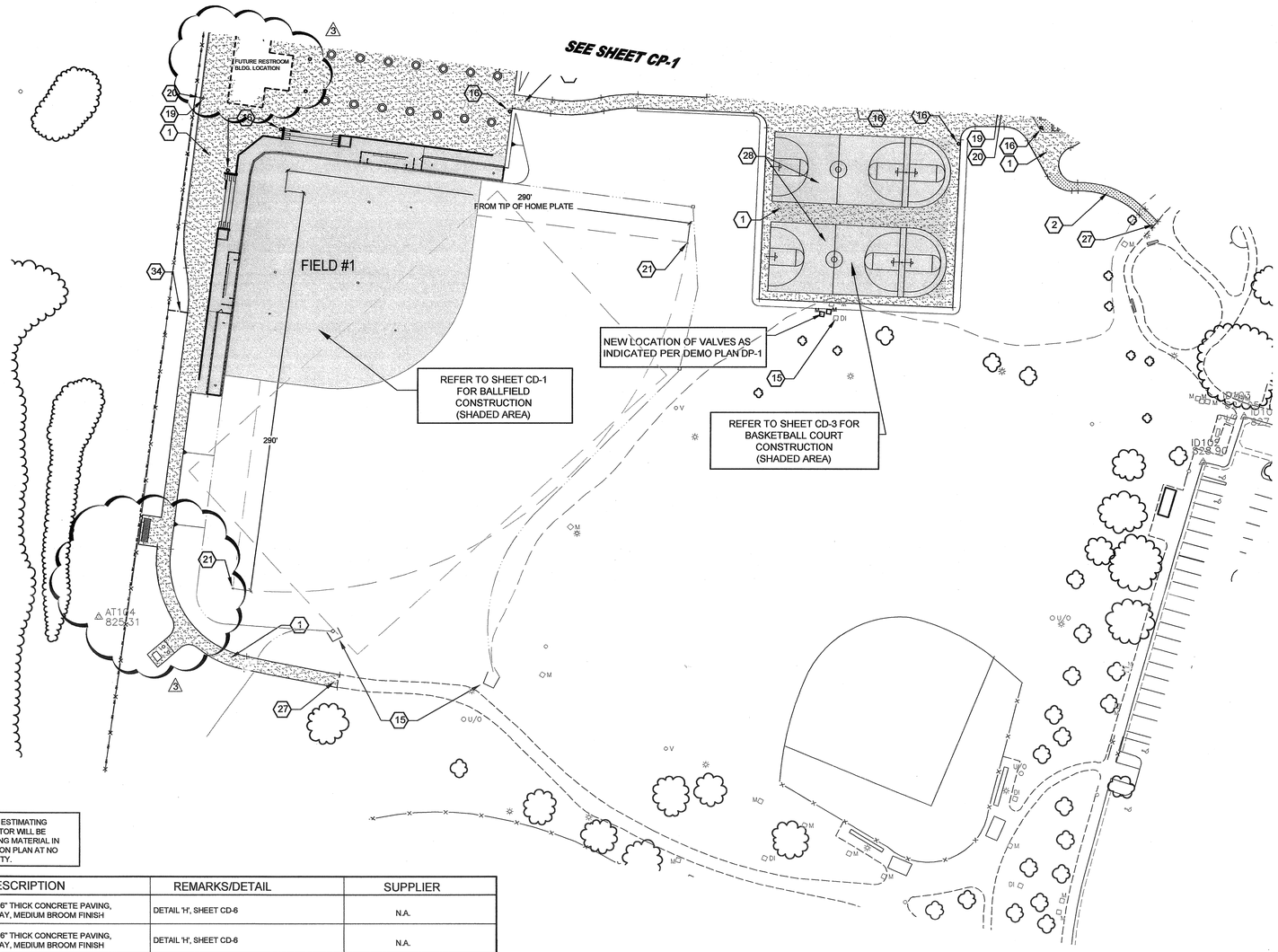

QUANTITIES ARE GIVEN FOR ESTIMATING PURPOSES ONLY. CONTRACTOR WILL BE RESPONSIBLE FOR INSTALLING MATERIAL IN ALL AREAS AS DESIGNATED ON PLAN AT NO ADDITIONAL COST TO THE CITY.

BID STATUS	SYM.	QTY.	DESCRIPTION	REMARKS/DETAIL	SUPPLIER
BASE BID	1	66300 S.F.	CONSTRUCT 6" THICK CONCRETE PAVING, NATURAL GRAY, MEDIUM BROOM FINISH	DETAIL 'H', SHEET CD-6	N.A.
BID ALT #1	1A	5100 S.F.	CONSTRUCT 6" THICK CONCRETE PAVING, NATURAL GRAY, MEDIUM BROOM FINISH	DETAIL 'H', SHEET CD-6	N.A.
BASE BID	2	10000 S.F.	CONSTRUCT 4" THICK CONCRETE PAVING, NATURAL GRAY, MEDIUM BROOM FINISH.	DETAIL 'H', SHEET CD-6	N.A.
BASE BID	3	2 EA	INSTALL TRELLIS BY 'POLIGON' STRUCTURE SHALL CONSIST OF (2) 8 FT. FLAT TRELLIS FRAME ASSEMBLIES AND (1) 8 FT. ARCH TRELLIS FRAME ASSEMBLY. THE ARCH TRELLIS SHALL BE IN THE MIDDLE. COLUMNS: "ROUND W/ ORNAMENTATION". ENTIRE STRUCTURE SHALL BE FACTORY POWDER COATED. COLOR: "EVERGREEN". CONTRACTOR SHALL TOUCH UP ALL SCRATCHES AFTER INSTALLATION WITH PAINT SUPPLIED BY MANUFACTURER.		MIRACLE PLAYGROUND SALES 800-264-7225 DETAIL 'B', SHEET CD-4
BASE BID	4	2 EA	INSTALL HEX 36 MODIFIED WITHOUT SOLID ROOF BY 'POLIGON'. ENTIRE STRUCTURE SHALL BE FACTORY POWDER COATED. COLOR: "EVERGREEN". CONTRACTOR SHALL TOUCH UP ALL SCRATCHES AFTER INSTALLATION WITH PAINT SUPPLIED BY MANUFACTURER.		MIRACLE PLAYGROUND SALES 800-264-7225 DETAIL 'A', SHEET CD-4
BASE BID	5	23 EA	INSTALL PRE-CAST CONCRETE PLANTERS BY 'QUICK CRETE' MODEL#QR-7218PR. COLOR: C1 NATURAL. TEXTURE T2, LIGHT SANDBLAST	ALL JOINTS SHALL BE CAULKED W/ SEALANT TO MATCH COLOR OF CONCRETE PLANTER. REFER TO DETAIL 'EE', SHEET CD-5 AND GRADING PLANS FOR DRAINAGE.	QUICK CRETE PRODUCTS 951-737-6240
BASE BID	6	REFER TO GRADING PLANS	CONSTRUCT ASPHALT PAVING PER GRADING PLANS STRIPE PER PLANS AND SPECIFICATIONS	PER SPECIFICATIONS AND GRADING PLANS	N.A.
BASE BID	7	5 L.S.	PAINT DISABLED PARKING STALL STRIPING (2) VAN, (3) REGULAR	DETAIL 'A', SHEET CD-7	N.A.
BASE BID	8	5 EA	INSTALL DISABLED PARKING STALL SIGN	DETAIL 'E', SHEET CD-7	N.A.
BASE BID	9	4 EA	INSTALL DISABLED PARKING LOT SIGN	DETAIL 'B', SHEET CD-7	N.A.
BASE BID	10	2 EA	INSTALL BLEACHER PER SPECIFICATIONS	ANCHOR PER MNFR. RECOMMENDATIONS	PER SPECIFICATIONS
N.A.	11	N.A.	FUTURE RESTROOM-CONCESSION BUILDING	N.A.	N.A.
BASE BID	12	REFER TO GRADING PLANS	CONSTRUCT CONCRETE CURB	REFER TO GRADING PLANS	N.A.
BASE BID	13	REFER TO GRADING PLANS	CONSTRUCT CONCRETE CURB AND GUTTER	REFER TO GRADING PLANS	N.A.
BASE BID	14	1 EA	CONSTRUCT TRASH ENCLOSURE	DETAIL 'G', SHEET CD-6	N.A.
BASE BID	15	REFER TO GRADING PLANS	EXISTING STORM DRAIN INLET. RAISE TOP OF EXISTING CATCH BASIN TO MAINTAIN A 5:1 MAX. SLOPE FROM NEW PAVING TO TOP OF GRATE. REGRADE, ADJUST IRRIGATION, AND PLANT SOD TO MATCH EXISTING TURF.		N.A.
BASE BID	16	19 EA.	INSTALL WASTE CONTAINER BY 'QUICK CRETE' MODEL# QS-CAL2550SDW COLOR: C1, NATURAL, TEXTURE:T2, LIGHT SANDBLAST	ATTACH TO PAVING WITH ⅝"X 8" 'J'-BOLT. SET 'J'-BOLT IN CONCRETE PAVING DURING POUR & BOLT W.C. THROUGH DRAIN HOLE.	QUICKCRETE PRODUCTS 951-737-6240
BASE BID	17	REFER TO GRADING PLANS	EXISTING STORM DRAIN TO REMAIN PROTECT IN PLACE.	N.A.	N.A.
BASE BID	18	14 EA	INSTALL BENCH PER SPECIFICATIONS	INSTALL PER MNFR. RECOMMENDATIONS	PER SPECIFICATIONS

BID STATUS	SYM.	QTY.	DESCRIPTION	REMARKS/DETAIL	SUPPLIER
BASE BID	19	4 EA	INSTALL DRINKING FOUNTAIN BY 'MOST DEPENDABLE FOUNTAINS' MODEL #440SS DB WITH "PET FOUNTAIN"	DETAIL 'C', SHEET CD-7 COORDINATE LOCATION OF DRINKING FOUNTAIN DRAINAGE SYSTEM WITH PROJECT INSPECTOR	N.A.
BASE BID	20	4 EA	INSTALL DRINKING FOUNTAIN SUMP	DETAIL 'C', SHEET CD-7 COORDINATE LOCATION OF DRINKING FOUNTAIN DRAINAGE SYSTEM WITH PROJECT INSPECTOR	MDF 800-552-6331
BASE BID	21	6 EA	INSTALL FOUL POLE BY 'LA STEELCRAFT' MODEL #FLP-30	PER MFG. DETAILS AND RECOMMENDATIONS. INSTALL 12" WIDE CONCRETE MOW CURB AROUND ENTIRE POLE.	COAST RECREATION 949-553-8065
BASE BID	22	16 EA	INSTALL PICNIC TABLE BY 'QUICKCRETE' MODEL #Q-LBT PT-C1-T2	DETAIL 'E', SHEET CD-6	QUICKCRETE PRODUCTS 951-737-6240
	23	NOT USED			
BASE BID	24	3 EA	CONSTRUCT DRIVE APPROACH	REFER TO GRADING PLANS	N.A.
BASE BID	25	2 EA	RESURFACE AND RESTRIPE EXISTING TENNIS COURTS PER SPECIFICATIONS	N.A.	N.A.
	26		NOT USED		
BASE BID	27	6 EA	JOIN NEW CONCRETE PAVING FLUSH WITH EXISTING CONCRETE PAVING.	DETAIL 'H', SHEET CD-6	N.A.
BASE BID	28	2 EA	CONSTRUCT BASKETBALL COURT	DETAIL 'A', SHEET CD-3	N.A.
ADD ALT #1	29	3 EA	CONSTRUCT HANDBALL WALL	DETAIL 'B', SHEET CD-6	N.A.
	30	NOT USED			
BASE BID	31	45 L.F.	CONSTRUCT TUBULAR STEEL FENCE	DETAIL 'F', SHEET CD-6	N.A.
BASE BID	32	4 EA	CONSTRUCT WHEELCHAIR RAMP	CITY OF RIVERSIDE STANDARD DRAWING NO. 304-TYPE II (MODIFIED)	N.A.
BASE BID	33	4 EA	CONSTRUCT WHEELCHAIR RAMP	CITY OF RIVERSIDE STANDARD DRAWING NO. 304-TYPE I (MODIFIED)	N.A.
BASE BID	34	475 LF	CONSTRUCT CONCRETE MOWCURB	DETAIL 'E', SHEET CD-3	N.A.
BASE BID	35	2 EA	CONSTRUCT PLAYGROUND	DETAIL 'D', SHEET CD-3	N.A.
BASE BID	36	LS	CONSTRUCT STREET IMPROVEMENTS PER STREET IMPROVEMENT PLANS	N.A.	N.A.
BASE BID	37	LS	CONSTRUCT D.G. TRAIL	DETAIL 'A', SHEET CP-2	N.A.

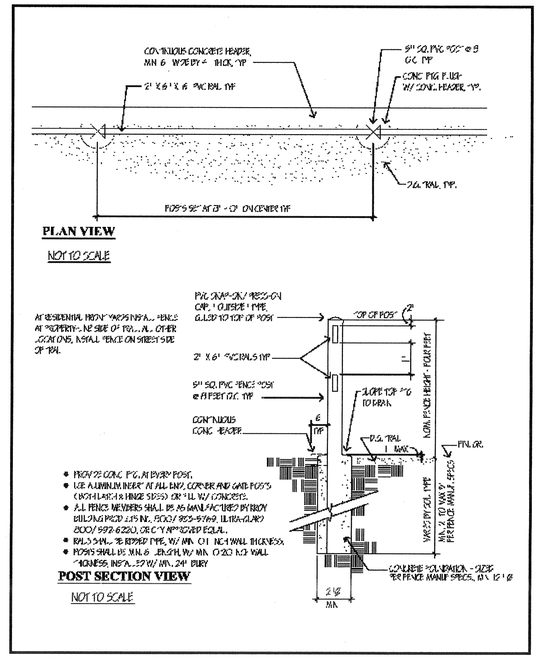

Approved	Date
B.I	01/02/96
Revised B.I	Date 08/29/02

Park and Recreation Department
CITY OF RIVERSIDE
PVC TRAIL FENCE

Detail No. 9

(B) TRAIL FENCE

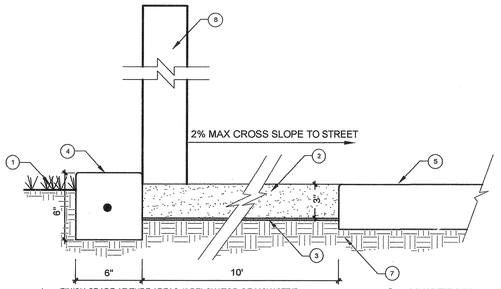

1. FINISH GRADE AT TURF AREAS 1" BELOW TOP OF MOW STRIP
2. CALIFORNIA GOLD DECOMPOSED GRANITE (SUBMIT SAMPLE FOR APPROVAL) STABILIZED W/ NONTOXIC PREMIUM ORGANIC SOIL ADDITIVE. AVAILABLE AT 'GAIL MATERIALS INC.' 1.800.442.7625 TO BE PLACED AFTER PLANT MATERIAL IS INSTALLED WHERE SHOWN ON PLANS.
3. TREVIRA SPUNDBOUND S1115 SOIL SEPARATOR FABRIC OR EQUAL
4. 2800 PSI CONCRETE MOWSTRIP NATURAL GREY SMOOTH TROWEL FINISH 1/4" RADIUS TO ALL EDGES. INSTALL 1/2" PREFORMED EXPANSION JOINTS @ 15' O.C. MAX, AND AT BEGINNING & END OF RADIUS.
5. CONCRETE SIDEWALK PER STREET IMPROVEMENT PLANS
6. #3 REBAR CONT. (CENTERED) LAP BARS 8" @ SPLICES & TIE
7. 90% COMPACTED SUBGRADE
8. TRAIL FENCE POST. REFER TO DETAIL B, THIS SHEET.

NOTES:
TRAIL SUBGRADE SHALL BE COMPACTED TO 90% RELATIVE COMPACTION FOR MINIMUM OF 12" BELOW D.G. SUBGRADE.

GRADE TRAIL HEAD FLUSH TO TOP OF PAVING AT STREET SIDE AND 1/2" MAX BELOW TOP OF PAVING AT MOWCURB SIDE.

WHERE TRAIL CROSSES DRIVEWAYS AND SIDEWALKS PROVIDE HEAVY BROOM FINISH CONCRETE.

(A) D.G. TRAIL

0' 40' 80' 120'

RHA LANDSCAPE ARCHITECTS PLANNERS, INC.
3612 MISSION INN AVE
RIVERSIDE, CALIFORNIA 92501
LIC. #1512
PH. (951) 781-1930
FAX (951) 686-8091

© R.H.A. Landscape Architects-Planners, Inc. expressly reserves its common law copyright and other property rights in these plans. These plans are not to be reproduced, changed or copied in any form or manner whatsoever, nor are they to be assigned to any third party without first obtaining the express written permission

CLIENT:
THE CITY OF RIVERSIDE
PARK AND RECREATION DEPT.
3900 Main Street
Riverside, California 92522

PROJECT:
Reid Park Expansion
Orange St. and Garner Rd.

REVISIONS	DATE	BY
3 CONFORMED SET	9/5/06	MH

LICENSED LANDSCAPE ARCHITECT
Registration No. 2376
Signature
Michael Hunter
Registered Date
11-11-05
date
STATE OF CALIFORNIA

SHEET TITLE
CONSTRUCTION PLAN

DESIGNED	MH/DG
DRAWN	MH/DG
CHECKED	DG
DATE	11-9-05
SCALE	PER PLAN
JOB NO.	03111

SHEET
CP-2
6 OF 19 SHEETS

[One Inch on Original Sheet] Drawing File: N:\Projects\03pr\03111 Reid Park Expansion\AutoCAD\RHA dwgs\CD's\Field Construction Set\08-30-06\03111 CP Sep 11, 2006 - 10:53am

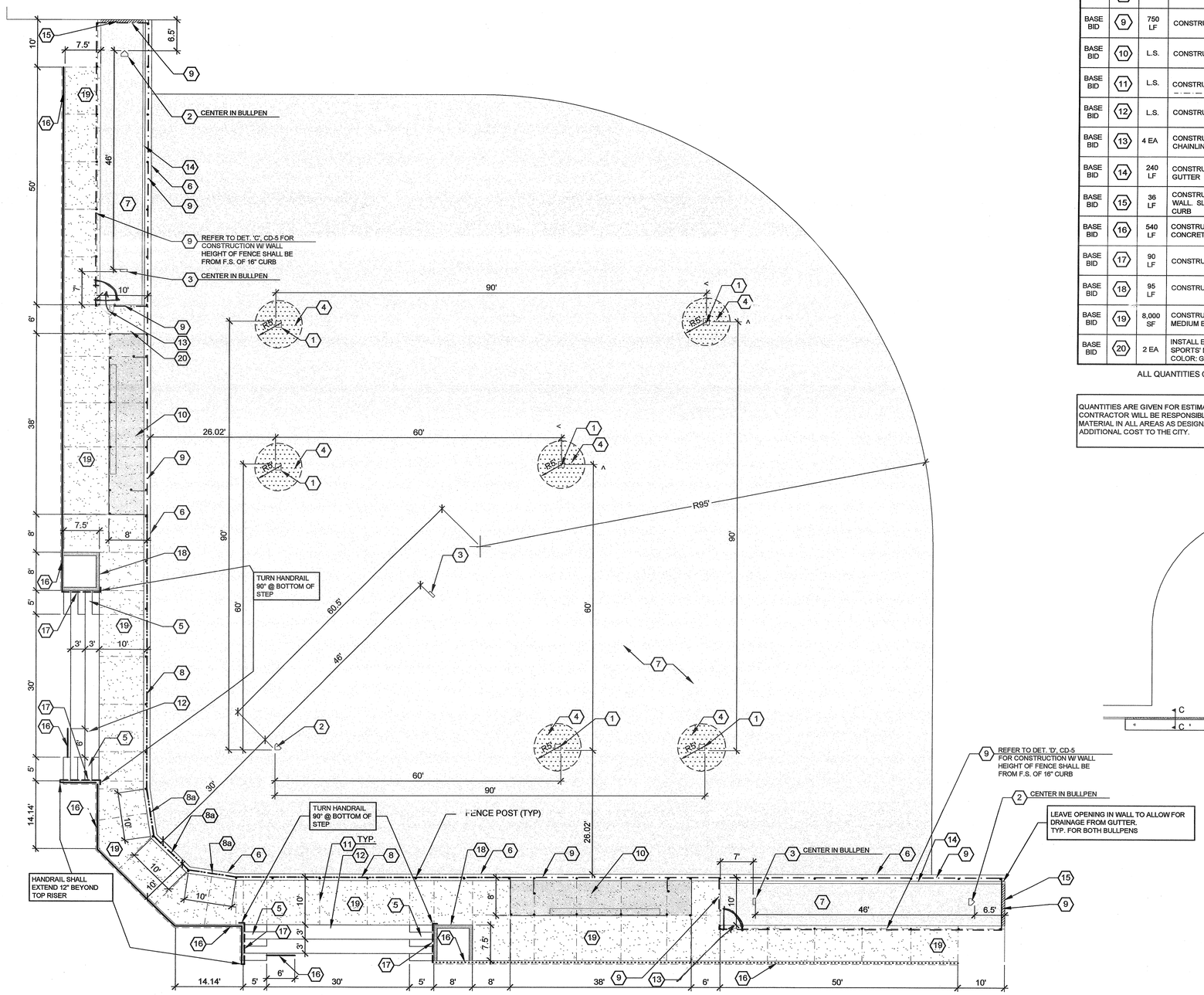

BID STATUS	SYM.	QTY.	DESCRIPTION	REMARKS/DETAIL	SUPPLIER
BASE BID	1	4 SETS	INSTALL BASEBALL BASE-'BOLCO' BASE PAD MODEL # 100-ML (10100) & BASE ANCHOR, MODEL# 205-BA (10205)	DETAIL 'J', SHEET CD-5	TOMARK SPORTS INC. 800-959-1844
BASE BID	2	6 EA	INSTALL BASEBALL/SOFTBALL HOME PLT. 'BOLCO '- HOME PLATE MODEL# 300-AS (10130)	DETAIL 'G', SHEET CD-5	TOMARK SPORTS INC. 800-959-1844
BASE BID	3	6 EA	INSTALL BASEBALL/SOFTBALL PITCHING RUBBER 'BOLCO '- PITCHING RUBBER MODEL# 6450-CL (10152)	DETAIL 'E', SHEET CD-5	TOMARK SPORTS INC. 800-959-1844
BASE BID	4	960 SF	INSTALL "STABILIZER PRO-GOLD INFIELD MIX" @ 6" THICK	PER SPECIFICATIONS	GAIL MATERIALS 951-279-1100
BASE BID	5	L.S.	CONSTRUCT CONCRETE BLEACHER STAIRS	DETAIL 'C', SHEET CD-6 DETAIL 'D', SHEET CD-6	N.A.
BASE BID	6	710 LF	CONSTRUCT 6" x 16" CONCRETE CURB UNDER FENCE & BACKSTOP	DETAIL 'I', SHEET CD-5 DETAIL 'F', SHEET CD-5 AND DETAIL BELOW	N.A.
BASE BID	7	52,200 SF	INSTALL "STABILIZER PRO-GOLD INFIELD MIX" @ 4" THICK	PER SPECIFICATIONS	GAIL MATERIALS 951-279-1100
BASE BID	8	300 LF	CONSTRUCT BACKSTOP	DETAIL I', SHEET CD-5	N.A.
BASE BID	8a	L.S.	INSTALL WOOD BOARDS	DETAIL 'I', SHEET CD-5	N.A.
BASE BID	9	750 LF	CONSTRUCT 10' HIGH CHAINLINK FENCE	DETAIL 'D', SHEET CD-5 DETAIL 'F', SHEET CD-5	N.A.
BASE BID	10	L.S.	CONSTRUCT DUGOUT	DETAIL 'A', SHEET CD-5	N.A.
BASE BID	11	L.S.	CONSTRUCT SCORE JOINT	DETAIL 'H', SHEET CD-6	N.A.
BASE BID	12	L.S.	CONSTRUCT CONCRETE BLEACHERS	DETAIL 'C', SHEET CD-6 DETAIL 'D', SHEET CD-6	N.A.
BASE BID	13	4 EA	CONSTRUCT 4' WIDE x 7' HIGH CHAINLINK GATE	DETAIL 'F', SHEET CD-5	N.A.
BASE BID	14	240 LF	CONSTRUCT 6" WIDE x 6" THICK CONCRETE GUTTER	REFER TO SECTION C-C BELOW	N.A.
BASE BID	15	36 LF	CONSTRUCT POUR-IN-PLACE CONCRETE WALL. SLOPE FROM PAVING TO TOP OF 16" CURB	DETAIL 'H', SHEET CD-5	N.A.
BASE BID	16	540 LF	CONSTRUCT HANDRAIL & POUR-IN-PLACE CONCRETE WALL	DETAIL 'B', SHEET CD-5 DETAIL 'C', SHEET CD-5	N.A.
BASE BID	17	90 LF	CONSTRUCT HANDRAIL FOR STAIRS	DETAIL 'C', SHEET CD-5	N.A.
BASE BID	18	95 LF	CONSTRUCT POUR-IN-PLACE CONCRETE WALL	DETAIL 'B', SHEET CD-5 DO NOT INSTALL HANDRAIL SHOWN ON DETAIL	N.A.
BASE BID	19	8,000 SF	CONSTRUCT 4" THICK CONCRETE PAVING, MEDIUM BROOM FINISH	DETAIL 'H', SHEET CD-6	N.A.
BASE BID	20	2 EA	INSTALL EQUIPMENT SHELTER BY 'TOMARK SPORTS' MODEL 11568 - DOUBLE DOOR COLOR: GREEN	PER MANUFACTURER'S RECOMMENDATIONS	TOMARK SPORTS INC. 800-959-1844

ALL QUANTITIES GIVEN ARE THE TOTAL FOR BOTH FIELDS 1 & 2

QUANTITIES ARE GIVEN FOR ESTIMATING PURPOSES ONLY. CONTRACTOR WILL BE RESPONSIBLE FOR INSTALLING MATERIAL IN ALL AREAS AS DESIGNATED ON PLAN AT NO ADDITIONAL COST TO THE CITY.

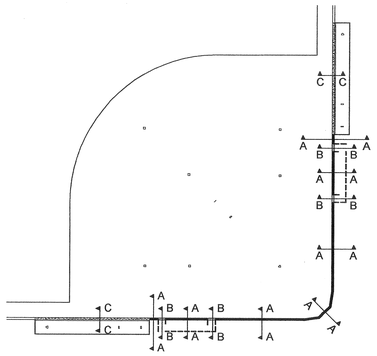

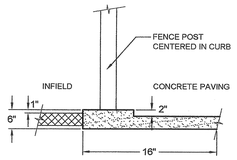

SECTION A-A

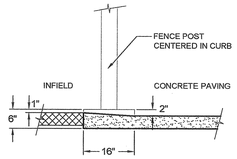

SECTION B-B

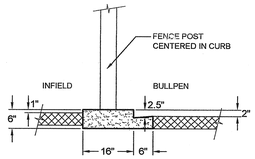

SECTION C-C

BALL FIELD CURBING

BALLFIELD CONSTRUCTION FOR FIELDS 1 & 2

RHA LANDSCAPE ARCHITECTS PLANNERS, INC.
3612 MISSION INN AVE
RIVERSIDE, CALIFORNIA 92501
LIC. #1512
PH. (951) 781-1930
FAX (951) 686-8091

© R.H.A. Landscape Architects–Planners, Inc. expressly reserves its common law copyright and other property rights in these plans. These plans are not to be reproduced, changed or copied in any form or manner whatsoever, nor are they to be assigned to any third party without first obtaining the express written permission.

CLIENT:
THE CITY OF RIVERSIDE
PARK AND RECREATION DEPT.
3900 Main Street
Riverside, California 92522

PROJECT:
Reid Park Expansion
Orange St. and Garner Rd.

REVISIONS	DATE	BY

LICENSED LANDSCAPE ARCHITECT
DOUGLAS GROVE NO. 2799
Signature
11/28/05
Registered Date
DOUG GROVE
STATE OF CALIFORNIA

SHEET TITLE
BALLFIELD CONSTRUCTION PLAN

DESIGNED	MH
DRAWN	MH
CHECKED	DG
DATE	11-9-05
SCALE	PER PLAN
JOB NO.	03111

SHEET
CD-1
7 OF 19 SHEETS

[One Inch on Original Sheet] Drawing File: N:\Projects\03cp\03111 Reid Park Expansion\Auto\CAD\RHA dwg\#CD\Field Construction Set 08-30-06 03111 CD Sep 11, 2006 - 10:59am

BID STATUS	SYM.	QTY.	DESCRIPTION	REMARKS/DETAIL	SUPPLIER
BASE BID	1	2 SETS	INSTALL BASEBALL BASE-'BOLCO' BASE PAD MODEL # 100-ML (10100) & BASE ANCHOR, MODEL# 205-BA (10205)	DETAIL 'J', SHEET CD-5	TOMARK SPORTS INC. 909-371-1844
BASE BID	2	3 EA	INSTALL BASEBALL/SOFTBALL HOME PLT. 'BOLCO '- HOME PLATE MODEL# 300-AS (10130)	DETAIL 'G', SHEET CD-5	TOMARK SPORTS INC. 909-371-1844
BASE BID	3	3 EA	INSTALL BASEBALL/SOFTBALL PITCHING RUBBER 'BOLCO '- PITCHING RUBBER MODEL# 6450-CL (10152)	DETAIL 'E', SHEET CD-5	TOMARK SPORTS INC. 909-371-1844
BASE BID	4	480 SF	INSTALL "STABILIZER PRO-GOLD INFIELD MIX" @ 6" THICK	PER SPECIFICATIONS	GAIL MATERIALS 909-279-1100
BASE BID	5	355 LF	CONSTRUCT 6" x 16" CONCRETE CURB UNDER FENCE & BACKSTOP	DETAIL 'I', SHEET CD-5 DETAIL 'F', SHEET CD-5 AND DETAIL BELOW	N.A.
BASE BID	6	26,100 SF	INSTALL "STABILIZER PRO-GOLD INFIELD MIX" @ 4" THICK	PER SPECIFICATIONS	GAIL MATERIALS 909-279-1100
BASE BID	7	150 LF	CONSTRUCT BACKSTOP	DETAIL I', SHEET CD-5	N.A.
BASE BID	8	L.S.	INSTALL WOOD BOARDS	DETAIL 'I', SHEET CD-5	N.A.
BASE BID	9	375 LF	CONSTRUCT 10' HIGH CHAINLINK FENCE	DETAIL 'D', SHEET CD-5 DETAIL 'F', SHEET CD-5	N.A.
BASE BID	10	L.S.	CONSTRUCT DUGOUT	DETAIL 'A', SHEET CD-5	N.A.
BASE BID	11	L.S.	CONSTRUCT SCORE JOINT	DETAIL 'H', SHEET CD-6	N.A.
BASE BID	12	2 EA	CONSTRUCT 4' WIDE x 7' HIGH CHAINLINK GATE	DETAIL 'F', SHEET CD-5	N.A.
BASE BID	13	120 LF	CONSTRUCT 6" WIDE x 6" THICK CONCRETE GUTTER	REFER TO SECTION C-C BELOW	N.A.
BASE BID	14	PER CP-1	CONSTRUCT 4" THICK CONCRETE PAVING, MEDIUM BROOM FINISH	DETAIL 'H', SHEET CD-6	N.A.
BASE BID	15	1 EA	INSTALL EQUIPMENT SHELTER BY 'TOMARK SPORTS' MODEL 11568 - DOUBLE DOOR COLOR: GREEN	PER MANUFACTURER'S RECOMMENDATIONS	TOMARK SPORTS INC. 800-959-1844

QUANTITIES ARE GIVEN FOR ESTIMATING PURPOSES ONLY. CONTRACTOR WILL BE RESPONSIBLE FOR INSTALLING MATERIAL IN ALL AREAS AS DESIGNATED ON PLAN AT NO ADDITIONAL COST TO THE CITY.

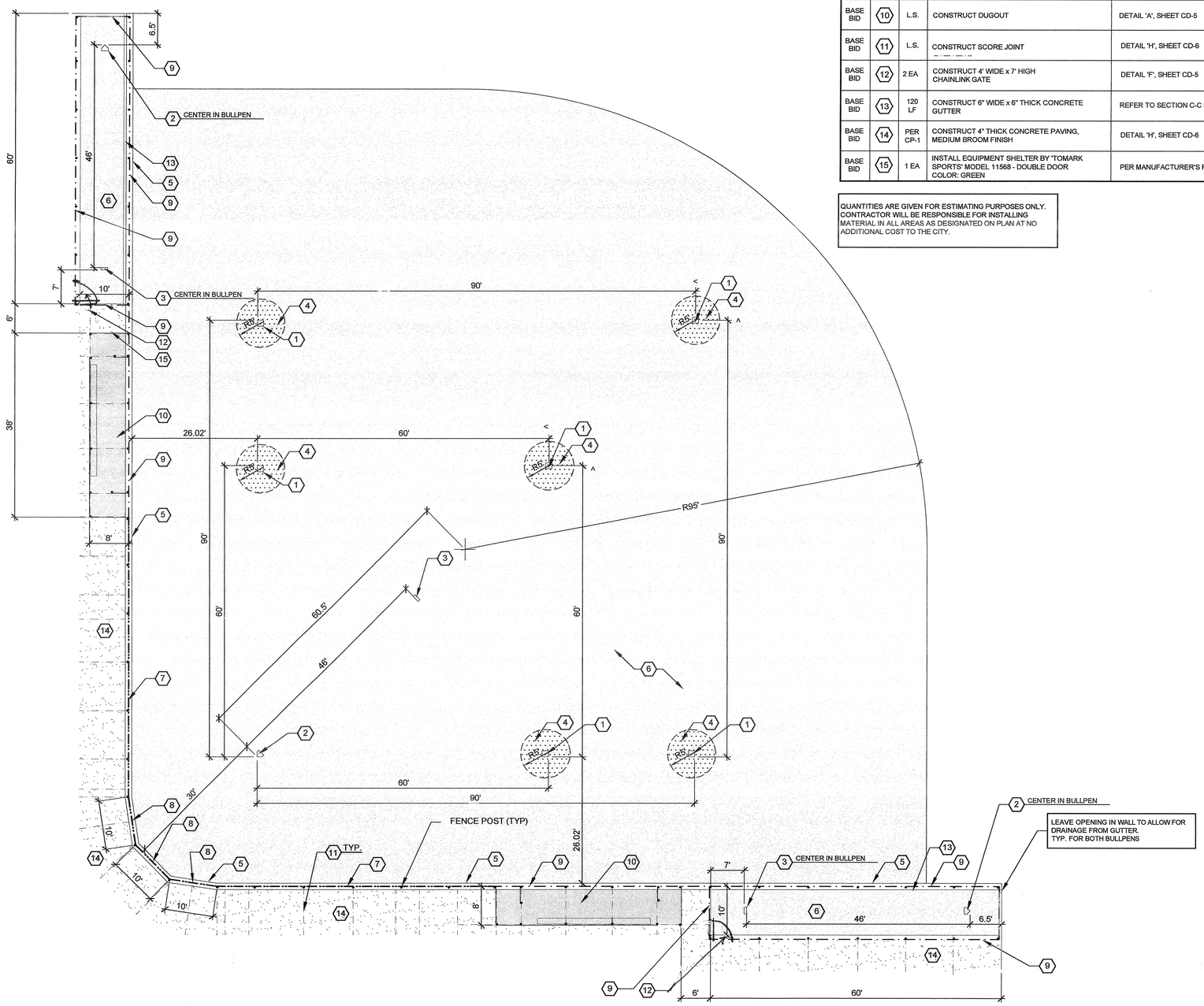

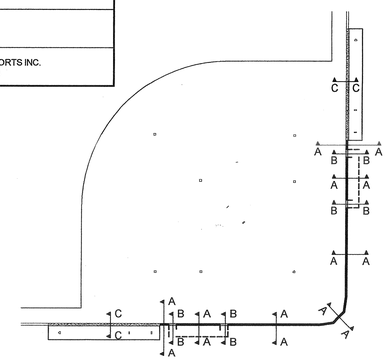

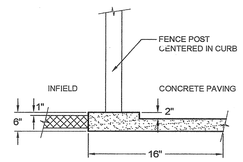

SECTION A-A

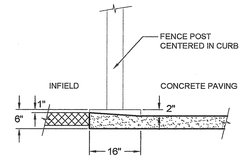

SECTION B-B

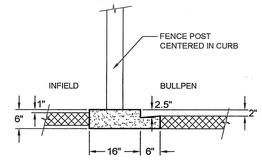

SECTION C-C

BALL FIELD CURBING

BALLFIELD CONSTRUCTION FOR FIELD 3

RHA LANDSCAPE ARCHITECTS PLANNERS, INC.
3612 MISSION INN AVE
RIVERSIDE, CALIFORNIA 92501
LIC. #1512
PH. (951) 781-1930
FAX (951) 686-8091

© R.H.A. Landscape Architects-Planners, Inc. expressly reserves its common law copyright and other property rights in these plans. These plans are not to be reproduced, changed or copied in any form or manner whatsoever, nor are they to be assigned to any third party, without first obtaining the written permission and consent of R.H.A. Landscape Architects-Planners, Inc.

CLIENT:
THE CITY OF RIVERSIDE
PARK AND RECREATION DEPT.
3900 Main Street
Riverside, California 92522

PROJECT:
Reid Park Expansion
Orange St. and Garner Rd.

REVISIONS	DATE	BY

LICENSED LANDSCAPE ARCHITECT
DOUGLAS GROVER
No. 1512
Signature
11/09/05
Expiration Date
STATE OF CALIFORNIA

SHEET TITLE
BALLFIELD CONSTRUCTION PLAN

DESIGNED	MH
DRAWN	MH
CHECKED	DG
DATE	11-9-05
SCALE	PER PLAN
JOB NO.	03111

SHEET
CD-2
8 OF 19 SHEETS

[One Inch on Original Sheet] Drawing File: N:\Projects\03jobs\03111 Reid Park Expansion\AutoCAD\RHA.dwg\CD\Field Construction Sat 08-30-08 03111 CD Sep 11, 2008 - 10:59am

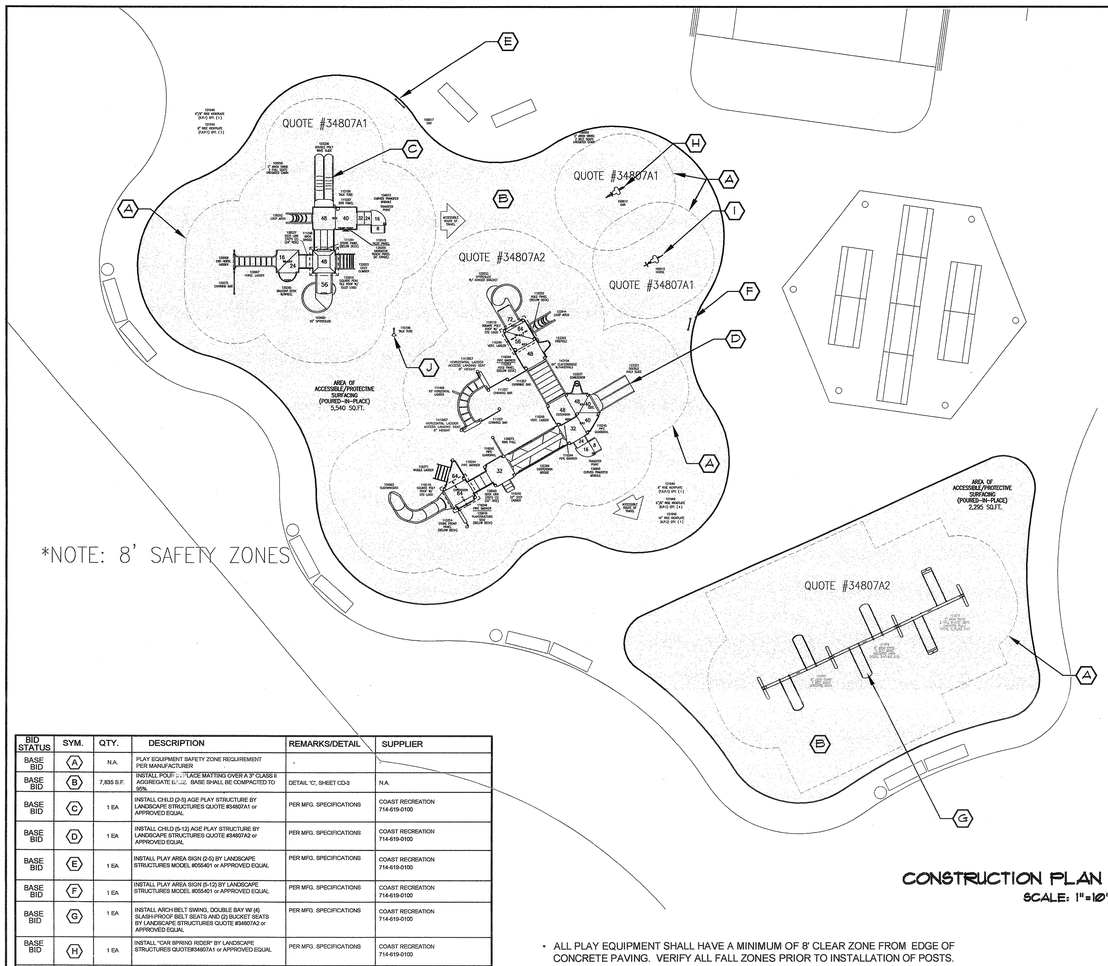

BID STATUS	SYM.	QTY.	DESCRIPTION	REMARKS/DETAIL	SUPPLIER
BASE BID	A	N.A.	PLAY EQUIPMENT SAFETY ZONE REQUIREMENT PER MANUFACTURER	-	
BASE BID	B	7,835 S.F.	INSTALL POUR-IN-PLACE MATTING OVER A 3" CLASS II AGGREGATE BASE. BASE SHALL BE COMPACTED TO 95%	DETAIL 'C', SHEET CD-3	N.A.
BASE BID	C	1 EA	INSTALL CHILD (2-5) AGE PLAY STRUCTURE BY LANDSCAPE STRUCTURES QUOTE #34807A1 or APPROVED EQUAL	PER MFG. SPECIFICATIONS	COAST RECREATION 714-619-0100
BASE BID	D	1 EA	INSTALL CHILD (5-12) AGE PLAY STRUCTURE BY LANDSCAPE STRUCTURES QUOTE #34807A2 or APPROVED EQUAL	PER MFG. SPECIFICATIONS	COAST RECREATION 714-619-0100
BASE BID	E	1 EA	INSTALL PLAY AREA SIGN (2-5) BY LANDSCAPE STRUCTURES MODEL #055401 or APPROVED EQUAL	PER MFG. SPECIFICATIONS	COAST RECREATION 714-619-0100
BASE BID	F	1 EA	INSTALL PLAY AREA SIGN (5-12) BY LANDSCAPE STRUCTURES MODEL #055401 or APPROVED EQUAL	PER MFG. SPECIFICATIONS	COAST RECREATION 714-619-0100
BASE BID	G	1 EA	INSTALL ARCH BELT SWING, DOUBLE BAY W/ (4) SLASH-PROOF BELT SEATS AND (2) BUCKET SEATS BY LANDSCAPE STRUCTURES QUOTE #34807A2 or APPROVED EQUAL	PER MFG. SPECIFICATIONS	COAST RECREATION 714-619-0100
BASE BID	H	1 EA	INSTALL "CAR SPRING RIDER" BY LANDSCAPE STRUCTURES QUOTE#34807A1 or APPROVED EQUAL	PER MFG. SPECIFICATIONS	COAST RECREATION 714-619-0100
BASE BID	I	1 EA	INSTALL "HORSE SPRING R.: 2R" BY LANDSCAPE STRUCTURES QUOTE#100016 or APPROVED EQUAL	PER MFG. SPECIFICATIONS	COAST RECREATION 714-619-0100
BASE BID	J	1 EA	INSTALL TALK TUBE BY LANDSCAPE STRUCTURES QUOTE#15199 or APPROVED EQUAL	PER MFG. SPECIFICATIONS	COAST RECREATION 714-619-0100
BASE BID	———	N.A.	PAVING TO MATTING CONNECTION	DETAIL 'C', SHEET CD-3	N.A.

CONSTRUCTION PLAN
SCALE: 1"=10'

- ALL PLAY EQUIPMENT SHALL HAVE A MINIMUM OF 8' CLEAR ZONE FROM EDGE OF CONCRETE PAVING. VERIFY ALL FALL ZONES PRIOR TO INSTALLATION OF POSTS.
- ALL PLAYGROUND EQUIPMENT SHALL BE INSTALLED BY A 'NATIONAL PLAYGROUND SAFETY INSTITUTE' (NPSI) CERTIFIED INSTALLER APPROVED BY THE EQUIPMENT MANUFACTURER AND THE CITY. INSTALLER SHALL PROVIDE THE CITY WITH A LETTER STATING THAT THE EQUIPMENT INSTALLATION MEETS ALL CURRENT CPSC.NPSI.ADA AND ASTM GUIDELINES.

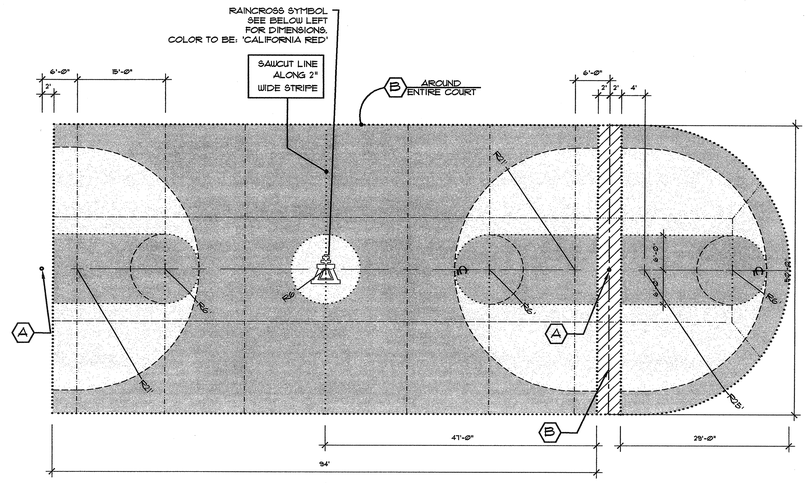

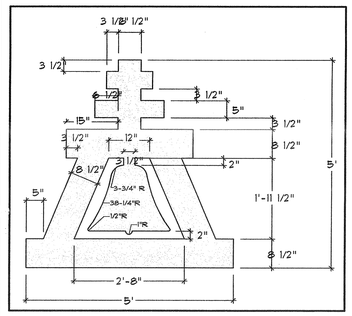

RAINCROSS SYMBOL
SCALE: N.T.S.

SYM.	QTY.	DESCRIPTION	REMARKS/DETAIL	SUPPLIER
A	2	INSTALL BASKETBALL POST, RIMS & NETS BY LA STEELCRAFT MODEL # FOR POST: 12066 (6' OFF-SET) MODEL # FOR RIM & NET: SD10 W/ CHAIN NET MODEL # FOR BACKBOARD: 12066-08(GALV.)	PER MFG. SPECIFICATIONS FACE OF BACKBOARD SHOULD BE 4' FROM EDGE OF COURT	COAST RECREATION (GREGG ROGERS) 714-619-0100
B	L.S.	EXPANSION JOINT	DETAIL 'B', SHEET CD-3	N.A.
	L.S.	CONTINUOUS 2" WIDE WHITE LINE	N.A.	N.A.
	L.S.	CONTINUOUS 4" WIDE WHITE LINE	N.A.	N.A.
	L.S.	DASHED 2" WIDE WHITE LINE	N.A.	N.A.
	L.S.	SAWCUT LINE	1/2 DEPTH OF CONCRETE	
	L.S.	COURT PAVING COLOR TO BE: SUDBURY SAND	DETAIL 'B', SHEET CD-3	COURT SURFACING TO BE BY 'PLEXIPAVE' REFER TO SPECIFICATIONS
	L.S.	COURT PAVING COLOR TO BE: FOREST GREEN	DETAIL 'B', SHEET CD-3	COURT SURFACING TO BE BY 'PLEXIPAVE' REFER TO SPECIFICATIONS
	L.S.	NATURAL GRAY CONCRETE PAVING MEDIUM BROOM FINISH	DETAIL 'B', SHEET CD-3	N.A.

D PLAYGROUND CONSTRUCTION PER PLAN

A BASKETBALL COURT CONSTRUCTION PLAN SCALE: 1"=10'

E CONCRETE MOW CURB SCALE: N.T.S.

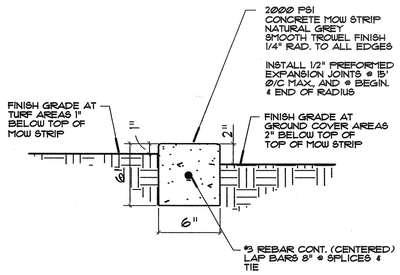

C PLAY GROUND CURB SCALE: N.T.S.

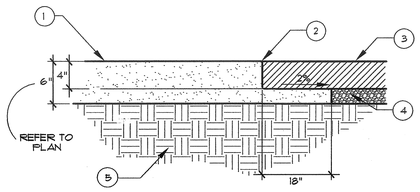

1. CONCRETE PAVING. REFER TO PLAN FOR THICKNESS
2. 1/4" RADIUS EDGE
3. TOP OF POUR-IN-PLACE MATTING
4. CLASS II AGGREGATE BASE PER PLAN (95% COMPACTION)
5. 90% COMPACTED SUB-GRADE

B COURT PAVING SCALE: N.T.S.

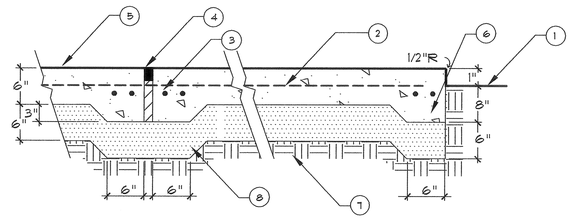

1. FINISH GRADE IN TURF AREAS
2. #4 BAR 24" O.C. BOTH WAYS
3. #4 BAR CONT. (2 EACH)
4. 3/8" FOAM EXPANSION JOINT W/MASTIC PER PLAN
5. COURT FINISH (REFER TO PLAN & SPECIFICATIONS)
6. CONCRETE PAVING W/ MEDIUM BROOM FINISH.
7. 90% COMPACTED SUBSOIL
8. 90% COMPACTED CLASS II AGGREGATE BASE

Underground Service Alert
CALL TOLL FREE
1-800
422-4133
TWO WORKING DAYS BEFORE YOU DIG

RHA LANDSCAPE ARCHITECTS PLANNERS, INC.
3612 MISSION INN AVE
RIVERSIDE, CALIFORNIA 92501
LIC. #1512
PH. (951) 781-1930
FAX (951) 686-8091

© R.H.A. Landscape Architects-Planners, Inc. expressly reserves its common law copyright and other property rights in these plans. These plans are not to be reproduced, changed or copied in any form or manner whatsoever, nor are they to be assigned to any third party without first obtaining the express written permission.

CLIENT:
THE CITY OF RIVERSIDE
PARK AND RECREATION DEPT.
3900 Main Street
Riverside, California 92522

PROJECT:
Reid Park Expansion
Orange St. and Garner Rd.

REVISIONS	DATE	BY

LICENSED LANDSCAPE ARCHITECT
REGISTRATION NO. 2509
Signature
Date
STATE OF CALIFORNIA

SHEET TITLE
PLAYGROUND & BASKETBALL CONSTRUCTION

DESIGNED	MH
DRAWN	MH
CHECKED	DG
DATE	11-9-05
SCALE	PER PLAN
JOB NO.	03111

SHEET
CD-3
9 OF 19 SHEETS

[One Inch on Original Sheet] Drawing File: N:\Projects\03job\03111 Reid Park Expansion\Auto\CAD\RHA dwgs\CD\Field Construction Set 08-30-05 03111 CD Sep 11, 2009 - 10:55am

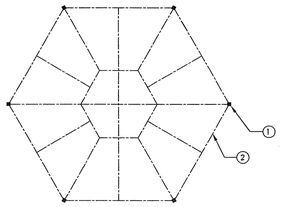

SCORE JOINT LAYOUT

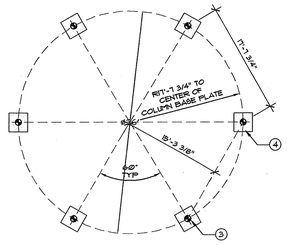

FOOTING & ANCHOR BOLT LAYOUT

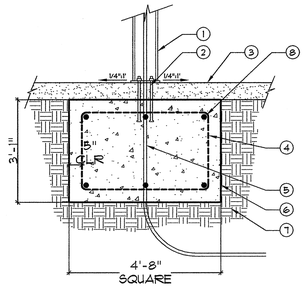

1. STRUCTURE POST
2. (4) 1/2" X 10" ANCHOR BOLTS
3. CONCRETE PAVING PER PLAN
4. (3) HOOPS EACH WAY
5. ELECTRICAL CONDUIT
6. 2500 PSI CONCRETE FOOTING
7. 95% COMPACTED SUB-GRADE
8. (3) #6 T & B - EACH WAY

1. STRUCTURE POST (TYP. OF 6)
2. SCORE JOINT PER DETAIL 'E', SHEET CD-1
3. ANCHOR BOLT LOCATION
4. CONCRETE FOOTING PER DETAIL AT RIGHT

NOTES:

CONTRACTOR SHALL OBTAIN ANCHOR BOLTS FROM POLYGON STRUCTURE REP. AND INSTALL IN CONCRETE FOOTING AS SHOWN.

CONTRACTOR SHALL COORDINATE EXACT LOCATIONS OF ANCHOR BOLTS WITH STRUCTURE REPRESENTATIVE.

ELECTRICAL CONDUIT SHALL BE INSTALLED INSIDE STEEL STRUCTURE POST.

3

REFER TO POLIGON STRUCTURAL CALCS FOR FOOTING SIZES. STRUCTRUAL CALCS TAKE PRECEDENCE OVER DETAILS.

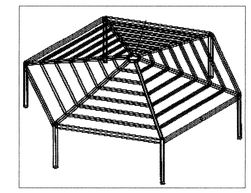

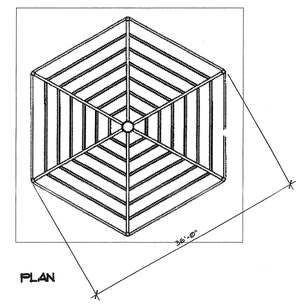

PLAN

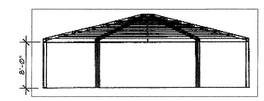

ELEVATION

A PICNIC SHELTER & TRELLLIS

N.T.S.

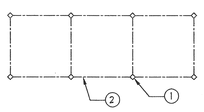

SCORE JOINT LAYOUT

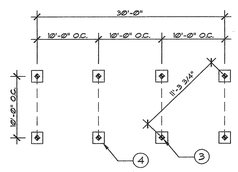

FOOTING & ANCHOR BOLT LAYOUT

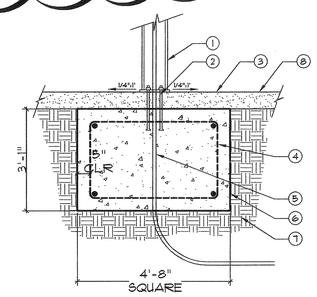

1. STRUCTURE POST
2. (4) 1/2" X 10" ANCHOR BOLTS
3. CONCRETE PAVING PER PLAN
4. (2) HOOPS EACH WAY
5. ELECTRICAL CONDUIT
6. 2500 PSI CONCRETE FOOTING
7. 95% COMPACTED SUB-GRADE
8. (2) #5 T & B - EACH WAY

1. STRUCTURE POST (TYP. OF 8)
2. SCORE JOINT PER DETAIL 'E', SHEET CD-1
3. ANCHOR BOLT LOCATION
4. CONCRETE FOOTING PER DETAIL AT RIGHT

NOTES:

CONTRACTOR SHALL OBTAIN ANCHOR BOLTS FROM POLYGON STRUCTURE REP. AND INSTALL IN CONCRETE FOOTING AS SHOWN.

CONTRACTOR SHALL COORDINATE EXACT LOCATIONS OF ANCHOR BOLTS WITH STRUCTURE REPRESENTATIVE.

ELECTRICAL CONDUIT SHALL BE INSTALLLED INSIDE STEEL STRUCTURE POST.

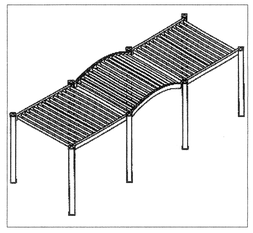

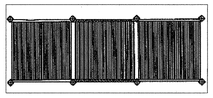

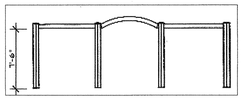

B FLAT TRELLIS OVERHEAD

N.T.S.

RHA LANDSCAPE ARCHITECTS PLANNERS, INC.
3612 MISSION INN AVE
RIVERSIDE, CALIFORNIA 92501
LIC. #1512
PH. (951) 781-1930
FAX (951) 686-8091

© R.H.A. Landscape Architects-Planners, Inc. expressly reserves its common law copyright and other property rights in these plans. These plans are not to be reproduced, changed or copied in any form or manner whatsoever, nor are they to be assigned to any third party without first obtaining the express written permission.

CLIENT:
THE CITY OF RIVERSIDE
PARK AND RECREATION DEPT.
3900 Main Street
Riverside, California 92522

PROJECT:
Reid Park Expansion
Orange St. and Garner Rd.

REVISIONS	DATE	BY
3 CONFORMED SET	9/5/06	MH

LICENSED LANDSCAPE ARCHITECT
DOUGLAS GROVE NO. 2798
Signature
11/09/06
Registered Agent
Date
STATE OF CALIFORNIA

SHEET TITLE
SHELTER CONSTRUCTION PLAN

DESIGNED	MH
DRAWN	MH
CHECKED	DG
DATE	11-9-05
SCALE	PER PLAN
JOB NO.	03111

SHEET
CD-4
10 OF 19 SHEETS

[One Inch on Original Sheet] Drawing File: N:\Projects\03proj\03111 Reid Park Expansion\AutoCAD\RHA dwgs\CD\Field Construction Set\08-30-06\03111 LO Sep 11, 2006 - 10:56am

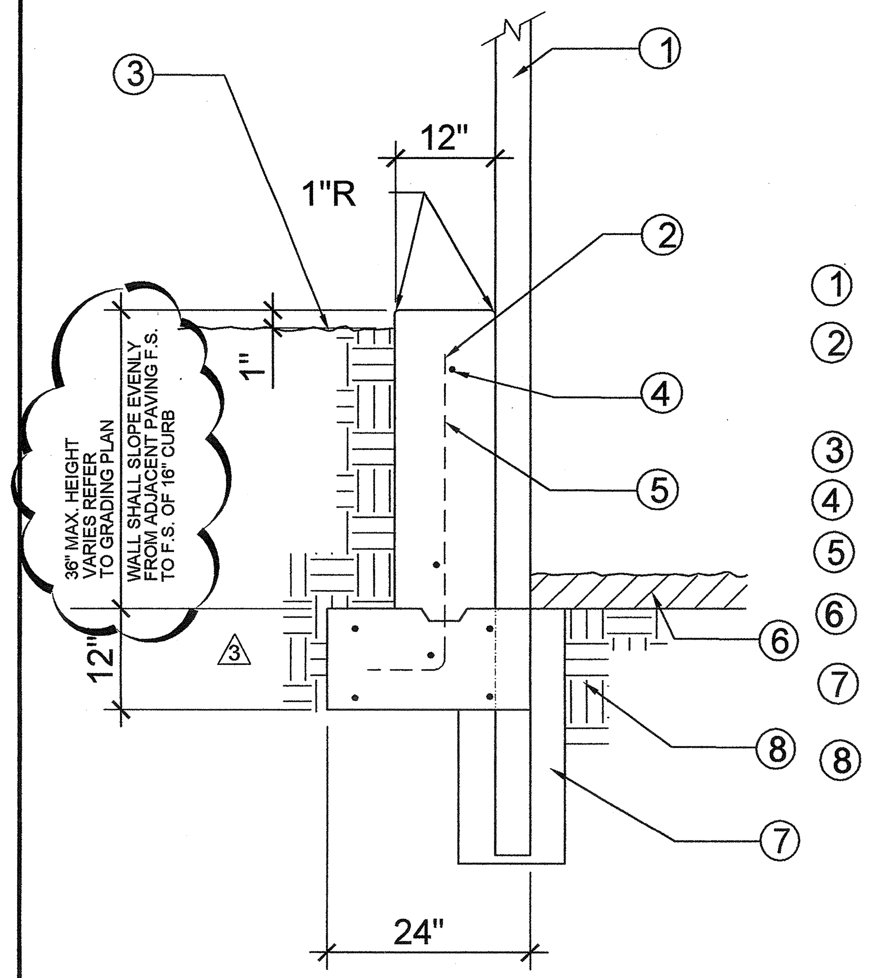

1. FENCE POST PER PLAN
2. POUR-IN-PLACE CONCRETE WALL LIGHT SAND BLAST FINISH PAINT EXPOSED, SURFACES WITH 'VITROCEM'
3. TURF FINISH GRADE
4. (6) #4 HORIZONTAL REBAR.
5. #4 REBAR AT 24" O.C.
6. BULLPEN INFIELD MIX PER PLAN
7. FENCE POST FOOTING PER DETAIL 'F', SHEET CD-5.
8. 95% COMPACTED SUB-GRADE.

H BULLPEN CONCRETE WALL

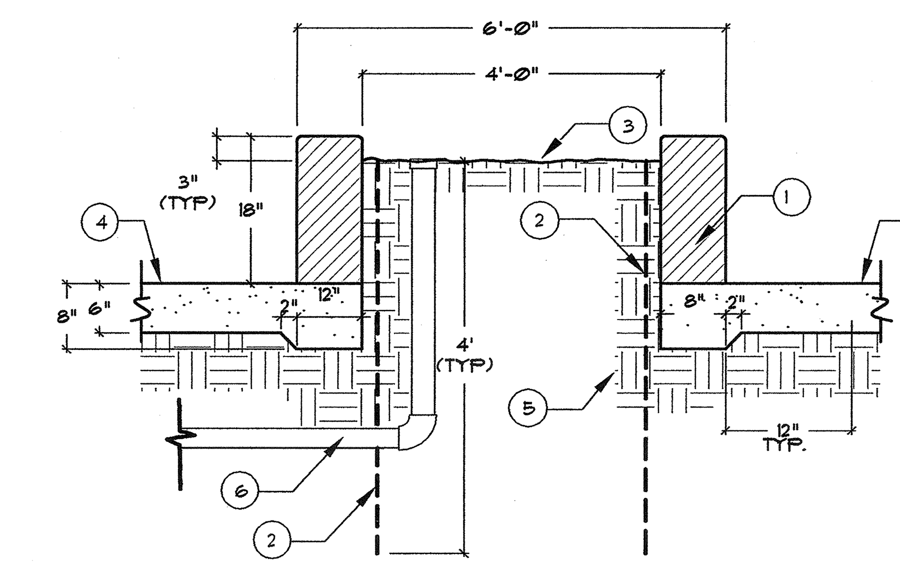

1. PRE-CAST PLANTER PER CONSTRUCTION PLAN
2. 4' DEEP ROOT BARRIER PANEL ON ALL FOUR SIDES OF PLANTER BED
3. FINISH GRADE
4. CONCRETE PAVING PER PLAN
5. PLANTER MIX BACKFILL AND/OR COMPACTED SUB-GRADE
6. 4" DIA. ABS DRAIN LINE. CONNECT TO STORM DRAIN SYSTEM REFER TO SHEET GP-1 INSTALL CAST IRON ATRIUM DRAIN GRATE AT PIPE OPENING

E TREE PLANTER DRAINAGE

1. RAISED CURB SHOWN ON BACKSTOP & FENCING DETAILS SHALL BE INSTALLED FLUSH W/ADJACENT PAVING IN THESE AREAS. REFER TO DETAIL ON SHEET CD-1 & CD-2
2. BAT RACK BY TOMARK SPORTS MODEL # 10998 (15 BATS) TOMARK SPORTS: (951) 371-1844
4. CHAIN LINK FENCE POST (TYP.)
5. CONCRETE CURB PER BACKSTOP DETAIL
6. 10' CHAIN LINK FENCE PER DETAIL 'F', SHEET CD-5
7. PLAYER BENCHES PER SPECIFICATIONS
8. 6' CHAIN LINK FENCE PER DETAIL 'F' SHEET CD-5
9. SCORE JOINT, REFER TO DETAIL 'H', SHEET CD-6
10. 4" CONCRETE PAVING PER PLAN
11. CHAIN LINK BACKSTOP

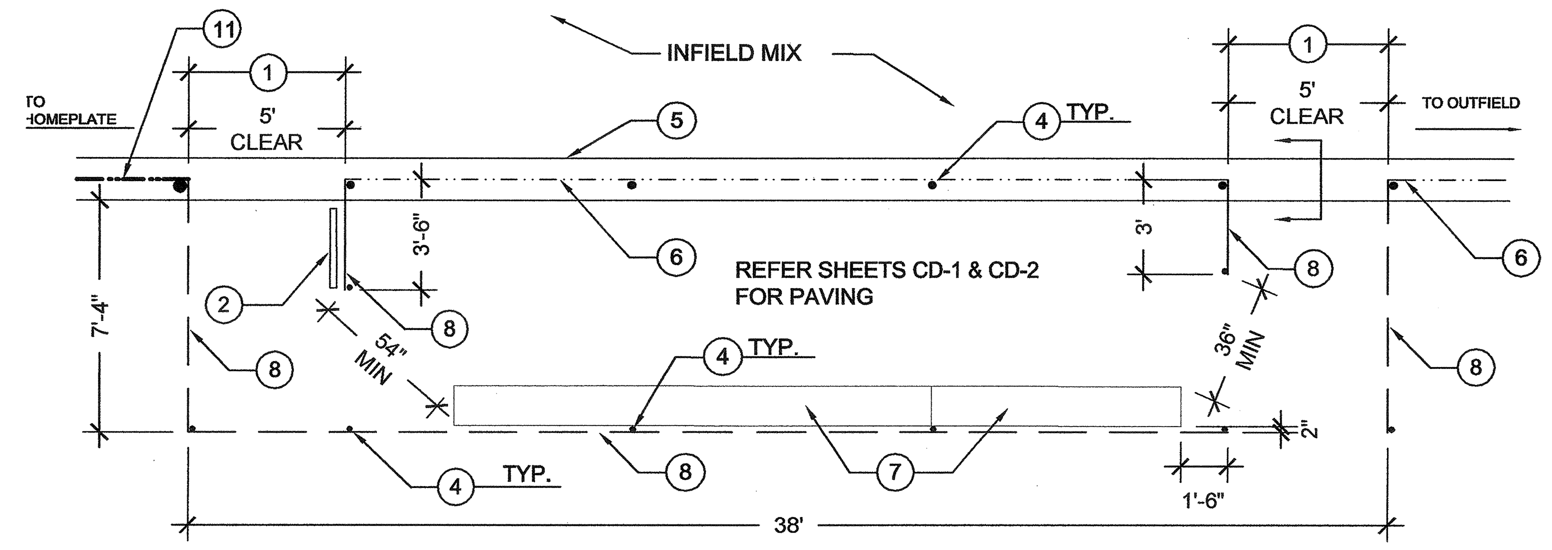

A DUGOUT PLAN

SCALE: 1/4"=1'-0"

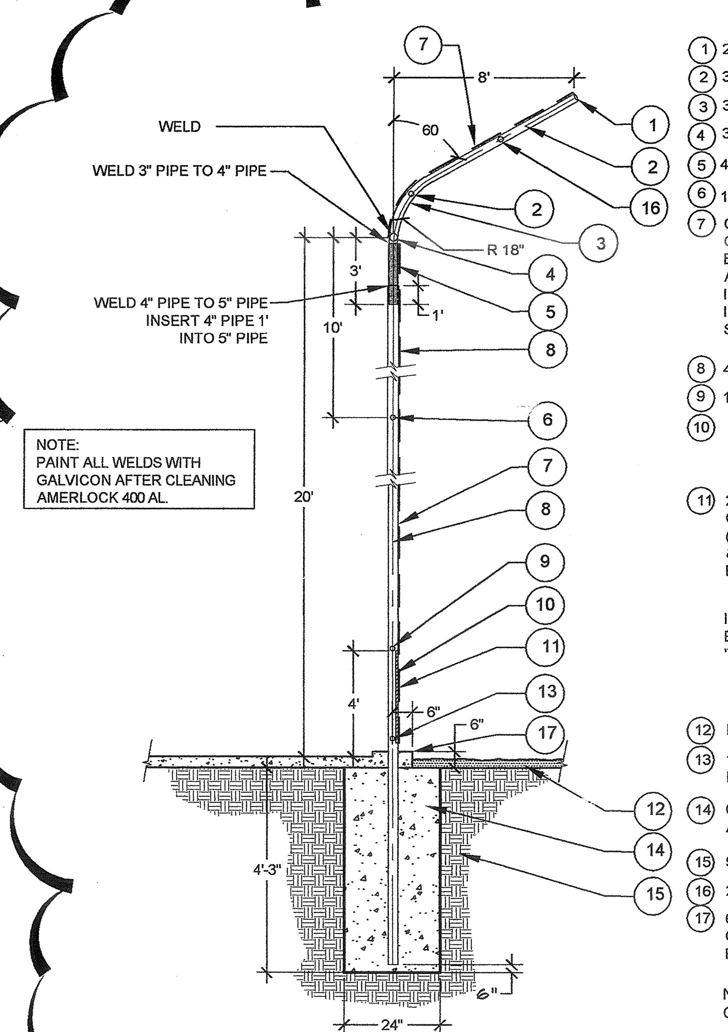

NOTE:
PAINT ALL WELDS WITH GALVICON AFTER CLEANING AMERLOCK 400 AL.

1. 2" DIA. PIPE WELD TO END
2. 3" DIA. PIPE
3. 3" DIA. PIPE WELD IN PLACE
4. 3" DIA. TOP RAIL WELD TO POST
5. 4" DIA. BACKSTOP POST @ 10' O.C.
6. 1 1/4" DIA. PIPE MID RAIL
7. CHAIN LINK FABRIC (9 GA., 2" MESH) GALV. W/ 1/4"x 3/4" GALV. STRETCHER BARS, KNUCKLED SELVAGE TOP AND BOTTOM. INSTALL ON FIELD SIDE ON VERTICAL SECTION OF FENCE. INSTALL ON OUTSIDE ON CURVED AND TOP PORTION AS SHOWN.
8. 4" DIA. PIPE
9. 1-1/4" DIA. PIPE
10. 4"X1 1/2"X3/16" STEEL ANGLE IRON WELD HORIZONTAL TO 4" VERTICAL POST (CENTER 3 SECTIONS ONLY) REFER TO SHEET CD-1 & CD-2.
11. 2X6 S4S D.F. CLEAR, VERTICAL W/ (2) 1/2" DIA. CARRIAGE BOLTS EACH END, EASE ALL EDGES (CENTER 3 SECTIONS ONLY) REFER TO SHEET CD-1 & CD-2. PAINT W/ TWO (2) COATS OF DARK GREEN ENAMEL.

INSTALL BACKSTOP PADDING (4' HIGH x 10' LONG) AT EACH WOOD SECTION (3 TOTAL), AVAILABLE FROM 'TOMARK SPORTS 800-959-1844 MODEL #11582

12. INFIELD MIX PER PLAN
13. 1-5/8" DIA. PIPE ON ALL SECTIONS BUT CENTER THREE.
14. CONCRETE FOOTING WITH (8) #5 VERT AND #3 TIES AT 12" O.C. W/ (3) #3 TIES AT 3" O.C. @ TOP
15. 95% COMPACTED SUBGRADE
16. 2" DIA. PIPE MID RAIL
17. 6"x16" CONCRETE CURB TO BE POURED CONTINUOUS WITH ADJACENT CONCRETE PAVING.

NOTE: PAINT ALL WELDS WITH GALVICON AFTER CLEANING AMERLOCK 400 AL

I BACKSTOP

SCALE: 1"=1'-0"

CHAIN LINK FENCE	BALL FIELDS		
POST SIZE		FOOTING	
POSTS & RAILS	PIPE DIA.	FTG. DEPTH	FTG. DIA.
6' LINE	1.900" O.D.	3'-3"	12"
6' END	2.375" O.D.	3'-3"	12"
6' CORNER	2.375" O.D.	3'-3"	12"
10' LINE	2.375" O.D.	5'-0"	12"
10' END	2.875" O.D.	5'-0"	12"
10' CORNER	2.875" O.D.	5'-0"	12"
TOP, MIDDLE, BOTTOM RAILS	1.660" O.D.	-	-

CHAIN LINK FENCE MATERIALS

CHAIN LINK FABRIC-2" MESH, 9 GA. GALV. ASTM A392, CLASS 2
TRUSS RODS-3/8" GALV.
STRETCHER BAR-1/4"x3/4" GALV.
NOTES:
1. ALL CHAIN LINK FABRIC TO BE KNUCKLED SALVAGE TOP & BOT.
2. POST DIA. ARE STD. NOMINAL PIPE SIZE
3. TACK WELD ALL FASTENERS

ALL FENCE POSTS, GATE FRAMES, CHAIN LINK FABRIC & ALL STEEL PARTS SHALL BE HOT DIPPED GALV. SCH. 40

ALL FOOTINGS SHALL HAVE (4) #4 VERTICAL AND #3 TIES AT 12" O.C. WITH (3) TIES AT 3" O.C. AT TOP.

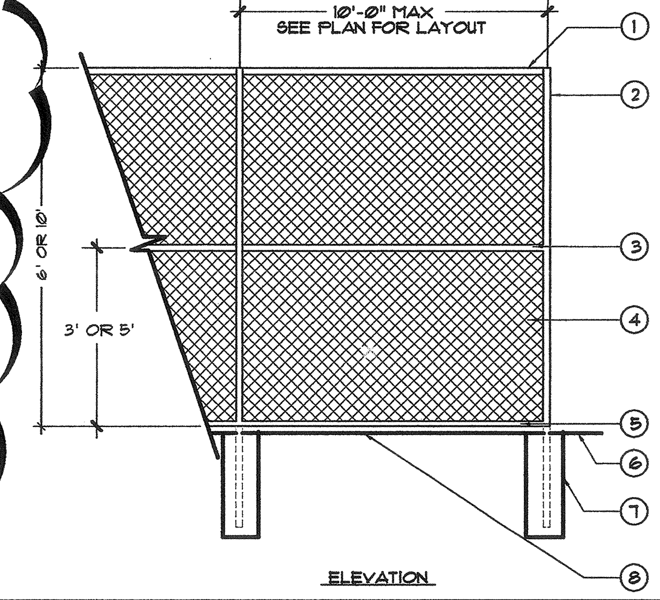

1. TOP RAIL / OR END/ CORNER
2. LINE POST (TYP.) / OR END/CORNER
3. MIDRAIL - (2) @ DUG OUT
4. CHAIN LINK FABRIC
5. BOTTOM RAIL
6. FINISH GRADE
7. FENCE POST FOOTING 90% COMPACTED SUB GRADE
8. 6" x 16" CONCRETE CURB CENTER FENCE IN CURB
9. INFIELD MIX
10. TURF AND/OR CONCRETE PAVING PER PLAN

F CHAIN LINK FENCE

SCALE: 1"=1'-0"

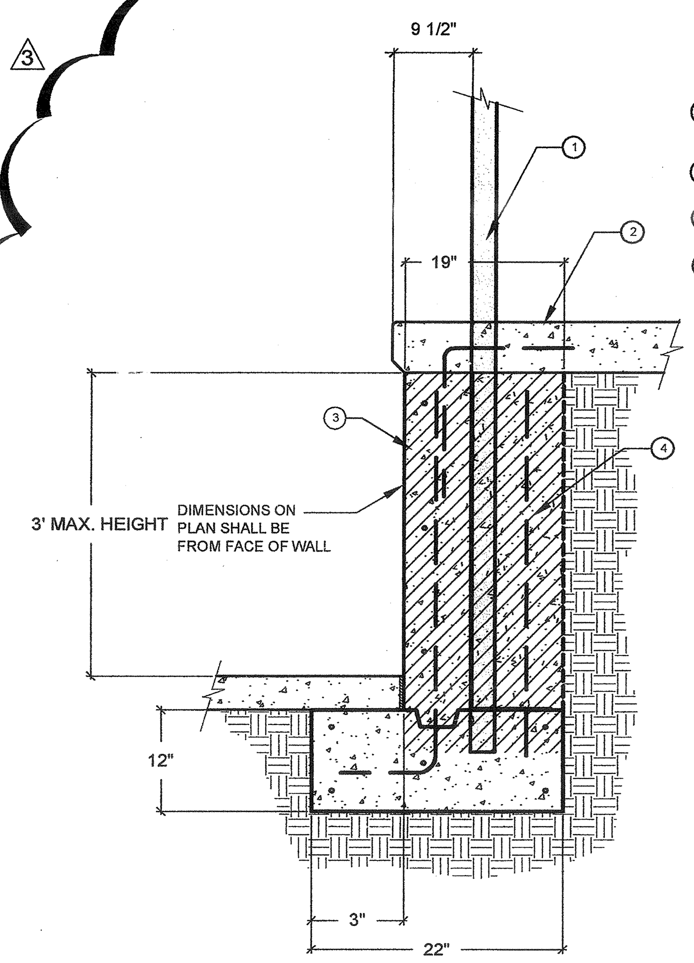

1. CHAIN LINK FENCE POST INSTALL FLUSH WITH BACK OF WALL INSTALL FABRIC ON WALK SIDE OF POSTS
2. CONC. PAVING WHERE OCCURS PER PLAN
3. POUR-IN-PLACE CONCRETE WALL
4. CONCRETE FOOTING FOR FENCE POST (19" DIA. x 45" DEEP) FOOTING SHALL BE FORMED IN CONJUNCTION WITH WALL AND POURED MONOLITHIC WITH WALL. SET POST PRIOR TO POURING CONCRETE. WALL FOOTING SHALL BE BLOCKED OUT WHERE FOOTING OCCURS WHEN POURING WALL FOOTING.

D CONCRETE WALL WITH CHAIN LINK FENCE

SCALE: 1"=1'-0"

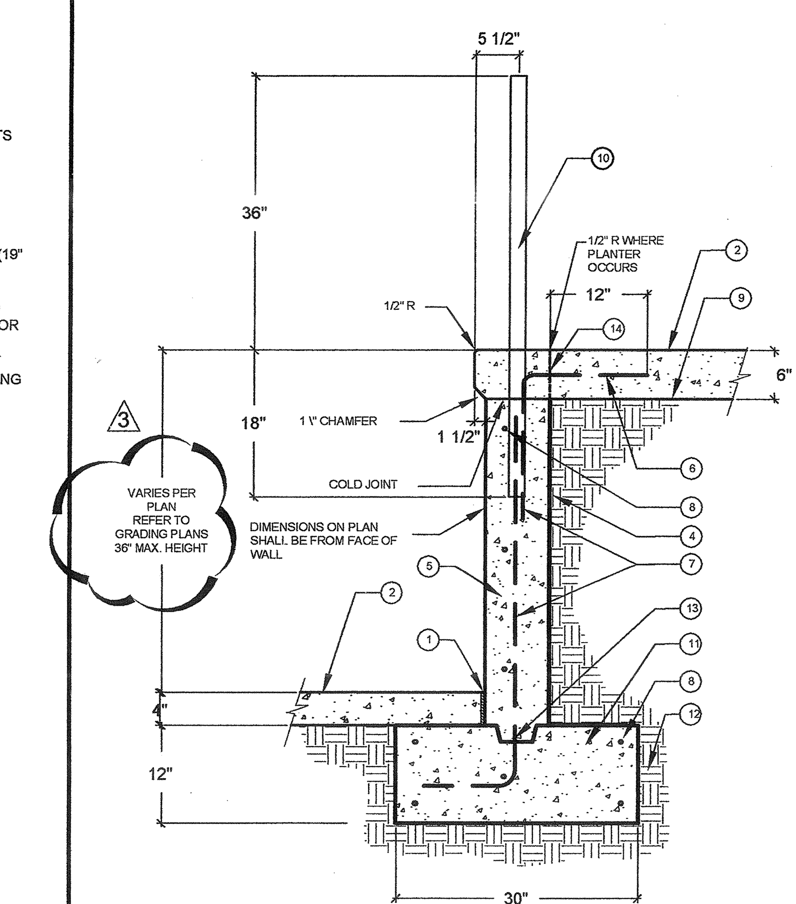

1. 1/2" PRE-MOLDED FOAM EXPANSION JOINT W/ POLYURETHANE CAULKING TO MATCH CONCRETE COLOR. SPRINKLE W/ SAND WHILE STILL WET.
2. CONC. PAVING WHERE OCCURS PER PLAN
4. WATER PROOFING "BACKING" BOARD
5. POUR-IN-PLACE CONCRETE WALL (2800 PSI) SLOPE WALL EVEN WHERE RAMP OCCURS. LIGHT SANDBLAST ALL EXPOSED CONCRETE.
6. #4 REBAR CONTINUOUS @ 24" O.C.
7. #4 VERTICAL REBAR @ 36" O.C.
8. (8) #4 REBAR CONTINUOUS
9. FINISH GRADE IN PLANTER
10. HANDRAIL PER DETAIL 'B', THIS SHEET. CORE DRILL 3" DIA. HOLE AFTER PAVING IS INSTALLED AND FILL VOID AROUND POST WITH NON-SHRINK EPOXY.
11. CONCRETE FOOTING
12. 90% COMPACTED SUB-GRADE
13. 2 X 4 KEY
14. EDGE OF CONCRETE "CAP" WHERE PLANTER OCCURS

PAINT ALL EXPOSED CONCRETE WALL SURFACE WITH 'VITROCHEM' ANTI-GRAFFITI COATING

B WALL W/ HANDRAIL

SCALE: 1"=1'-0"

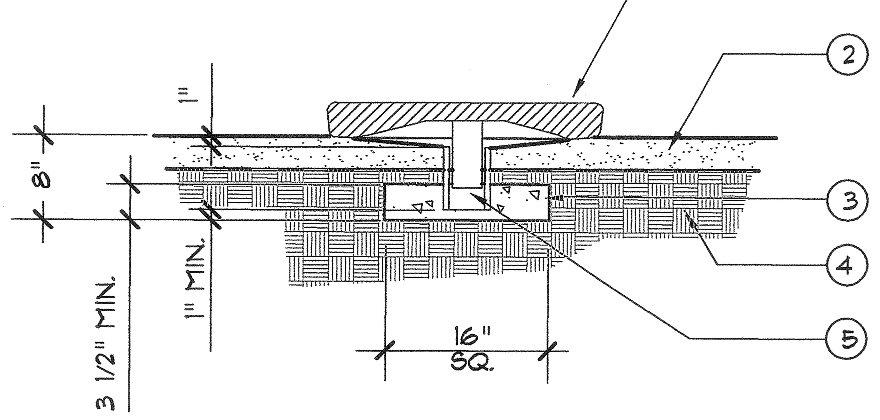

SECTION VIEW

1. BASE PER PLAN
2. 6" INFIELD MIX AROUND BASE PER PLAN
3. CONCRETE FOOTING-PRE POURED
4. 95% COMPACTED SUBGRADE
5. ANCHOR TOP & ANCHOR STAKE PER PLAN

J BASE

SCALE: 1"=1'-0"

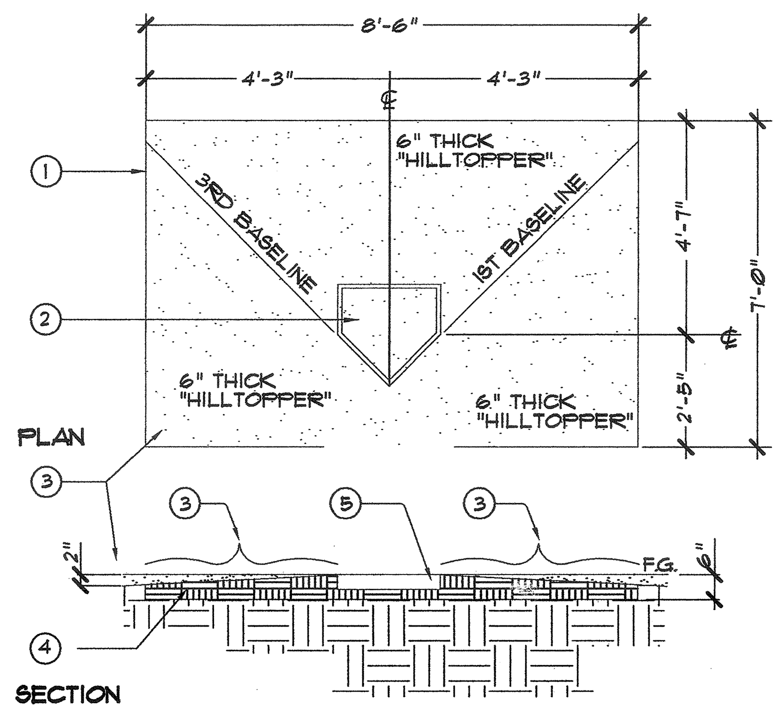

1. LIMIT OF "HILLTOPPER"
2. HOME PLATE PER PLAN
3. TAPER INFIELD MIX FROM 3" TO 1/4" @ PLATE
4. 6" MIN. LAYER OF "HILLTOPPER" SOIL COMPOUND. AVAILABLE FROM 'GAIL MATERIALS 909-279-1095. INSTALL PER MFG. SPECIFICATIONS
5. NOTE: 2 LAYERS OF 2 X 6 REDWOOD NAILED IN ALTERNATE DIRECTIONS TO WOOD FILLERS OF HOME PLATE FOR ADDITIONAL DEPTH/STABILITY -TOP OF PLATE TO BE LEVEL W/ PLAYING SURFACE

G HOME PLATE

SCALE: 1"=1'-0"

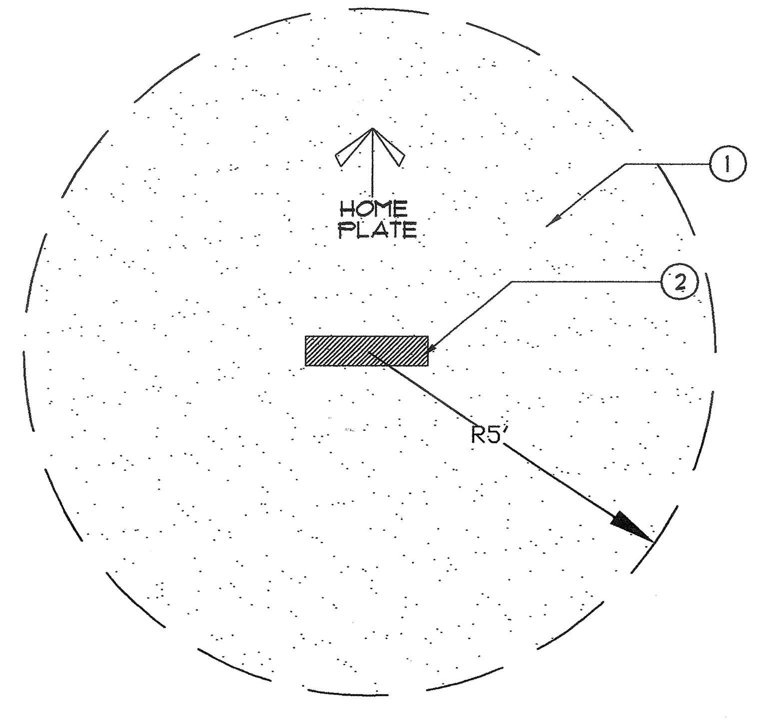

1. 4" OF 'HILLTOPPER' AVAILABLE FROM 'GAIL MATERIALS 909-279-1095. INSTALL PER MFG. SPECIFICATIONS
2. PITCHING RUBBER PER PLAN

E PITCHER'S BLOCK

SCALE: 1"=1'-0"

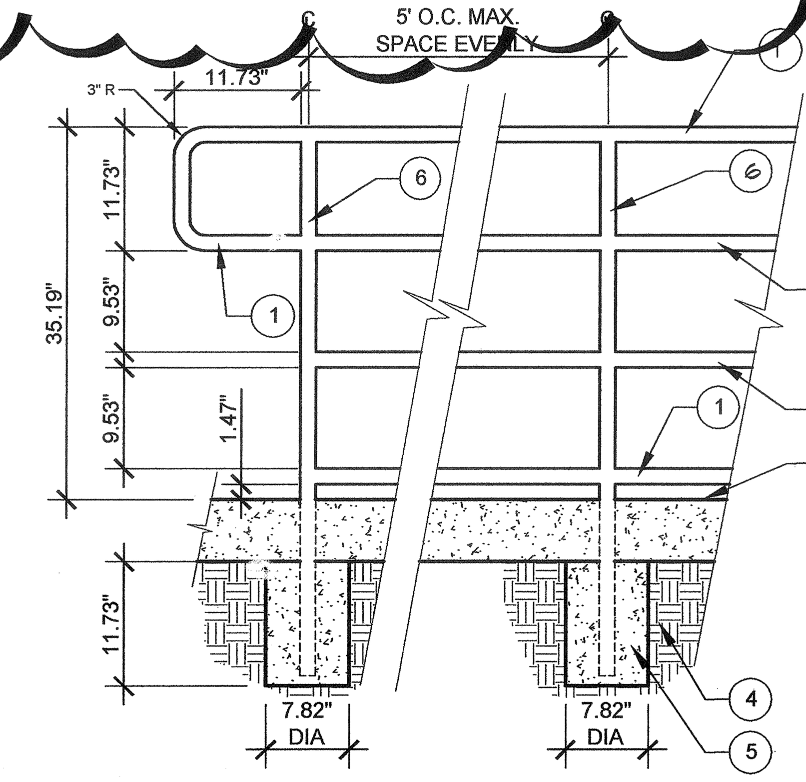

1. 1.5" x 1.5" SQUARE TUBULAR STEEL RAIL.
2. 1.5" x 1.5" SQUARE TUBULAR STEEL RAIL. BOTTOM RAIL SHALL BE OMITTED AT STAIRS
3. PAVING PER PLAN
4. 90% COMPACTED SUBGRADE
5. 2500 PSI CONCRETE FOOTING
6. 1.5" x 1.5" SQUARE TUBULAR STEEL POST. POSTS TO BE SET BEFORE CONCRETE PAVING IS POURED

NOTES
- HANDRAILS MUST BE INSTALLED AT ALL LOCATIONS WHERE WALK SLOPE IS GREATER THAN 1:20 (5%)
- ALL STEEL TO BE SCH. 40 HOT DIP GALVANIZED
- CONTINUOUS WELD ALL CONNECTIONS
- POSTS & RAILS SHALL BE INSTALLED 1 1/2" FROM FACE OF WALLS WHERE WALLS OCCUR
- INSTALL SKATEBOARD PREVENTION HANDRAIL GUARD BY 'RAVENSFORGE' MODEL HGS AT 30" O.C. ON TOP RAIL. SIZE: 1.5" WIDE, COLOR: SILICON BRONZE RAVENSFORGE: 888-743-3490

C HANDRAIL

SCALE: 1"=1'-0"

© R H A Landscape Architects–Planners, Inc. expressly reserves its common law copyright and other property rights in these plans. These plans are not to be reproduced, changed or copied in any form or manner whatsoever nor are they to be assigned to any third party without first obtaining the express written permission.

RHA
LANDSCAPE ARCHITECTS PLANNERS, INC.
3612 MISSION INN AVE
RIVERSIDE, CALIFORNIA 92501
LIC. #1512
PH. (951) 781-1930
FAX (951) 686-8091

CLIENT:
THE CITY OF RIVERSIDE
PARK AND RECREATION DEPT.
3900 Main Street
Riverside, California 92522

PROJECT:
Reid Park Expansion
Orange St. and Garner Rd.

REVISIONS	DATE	BY
3 CONFORMED SET	9/5/06	MH

LICENSED LANDSCAPE ARCHITECT DOUGLAS GROVE NO. 2799 Signature 11/30/07 Renewal Date 9/12/06 Date STATE OF CALIFORNIA

SHEET TITLE
CONSTRUCTION DETAILS

DESIGNED	MH
DRAWN	MH
CHECKED	DG
DATE	11-9-05
SCALE	PER PLAN
JOB NO.	03111

SHEET
CD-5
11 OF 19 SHEETS

[One Inch on Original Sheet] Drawing File: N:\Projects\03prj\03111 Reid Park Expansion\AutoCAD\RHA dwgs\CD's\Field Construction Set 08-30-06\03111 CD Sep 11, 2006 - 3:43pm

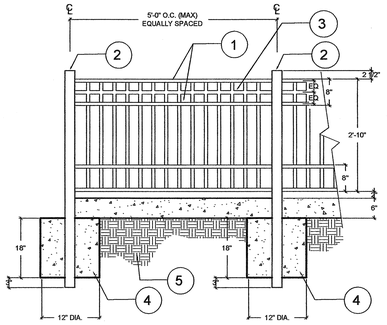

NOTE:
INSTALL 'SQUARE HANDRAIL GUARDS' ON TOP RAIL @ 30" O.C.
BY 'RAVENSFORGE' MODEL 'HGS'
SIZE 1.5" WIDE, COLOR: SILICON BRONZE.
RAVENSFORGE: 888-743-3490

1. 1½" WIDE X 1" HIGH STEEL RAIL HOT DIP GALV. AFTER FABRICATION.
2. 3" SQUARE STEEL POST @ 5' O.C. (TYP)
3. ¾" SQUARE STEEL PICKETS @4"O.C.
4. CONCRETE FOOTING
5. 90% COMPACTED SUB-GRADE

F TUBULAR STEEL FENCE

N.T.S.

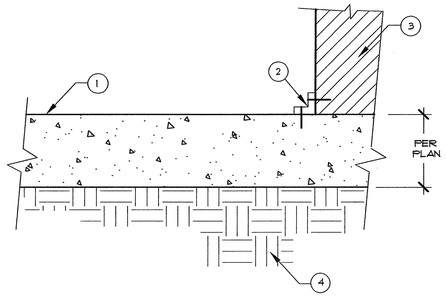

1. CONCRETE PAVING PER PLAN
2. 1.5" x 1.5" x 1/2" GALV. 'L'-BRACKET ATTACH TO PAVING & CONCRETE FURNITURE WITH 2" 'REDHEAD'. INSTALL @ 36" O.C. TYP. VERIFY LOCATIONS W/ LANDSCAPE ARCHITECT IN FIELD
3. CONCRETE FURNITURE (TABLE, TRASH CAN, ETC.)
4. 90% RELATIVE COMP ACTION SUB-GRADE

E CONC. FURN. ANCHOR

N.T.S.

B

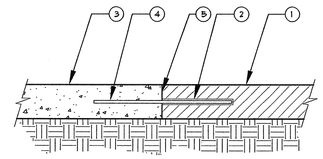

1. EXISTING CONCRETE PAVING TO REMAIN
2. CORE DRILL 5/8" HOLE IN EXISTING CONCRETE PAVING
3. NEW CONCRETE PAVING
4. #4 REBAR AT 18" O.C. WRAP PORTION INSERTED INTO EXISTING PAVING WITH TAR PAPER.
5. COLD JOINT

A PAVING CONNECTION

N.T.S.

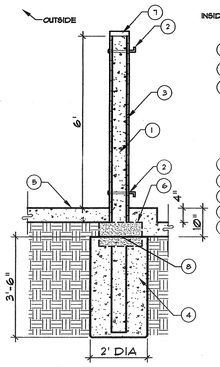

1. 6" SQ. POST PER PLAN AT LEFT SOLID GROUT FILL
2. 3/4" 'J' BOLT- WELD TO POST
3. 6 x 8 x 16 BLOCK WALL (GROUT SOLID) PRECISION BLOCK ON BOTH SIDES W/ PLASTER COAT TO MATCH BUILDINGS APPLY "VITROCHEM" TO ALL EXPOSED WALL SURFACES PER SPECIFICATIONS. #4 VERTICAL REBAR @ 24" O.C. ALTERNATE BENDS IN FOOTING #4 REBAR CONTINUOUS TOP, MIDDLE & BOTTOM
4. CONCRETE FOOTING FOR STEEL POST
5. CONCRETE PAVING PER PLAN
6. 10"x18" CONTINUOUS CONCRETE WALL FOOTING
7. 2" PRECISION BLOCK CAP (TAN TO MATCH BLOCK)
8. #4 BAR CONTINUOUS

SECTION
N.T.S.

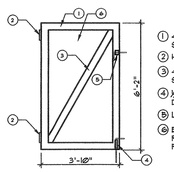

1. 4" SQ. 12 GA. TUBULAR STEEL FRAME
2. HEAVY DUTY HINGE
3. 4" SQ. 12 GA. TUBULAR STEEL BRACE
4. 5/8" DIA CANE BOLT (EACH DOOR)
5. LOCKING CANE BOLT
6. BOLT AND WELD 12 GA. RIBBED STEEL PANEL TO FRAME

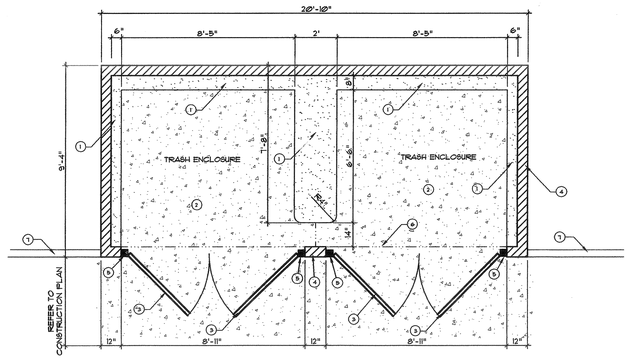

1. 4" HIGH CONCRETE CURB (WHEEL STOP)
2. 6" CONCRETE PAVING REFER TO SHEET CP-1 FOR LIMIT OF CONCRETE PAVING
3. (2) RIBBED 14 GA. SOLID METAL DOORS W/ LOCKING HATCH. WELD ¾" CHAIN TO DEADBOLT AND DOOR GATE PER DETAIL AT LEFT PAINT DOORS, POSTS & HARDWARE WITH TWO (2) COATS PER SPECS. CORE HOLE IN CONC. TO ACCEPT BOLTS WHEN DOORS ARE OPEN & CLOSED
4. 6" CMU BLOCK WALL PER SECTION AT LEFT
5. 6" SQ. x 1/4" THICK STEEL POSTS w/ 2 THREADED 'J' BOLTS THRU POST @ TOP & BOTTOM (SEE SECTION AT LEFT)
6. SCORE JOINT PER DETAIL 'H' THIS SHEET
7. PARKING LOT CURB PER PLAN

G TRASH ENCLOSURE

N.T.S.

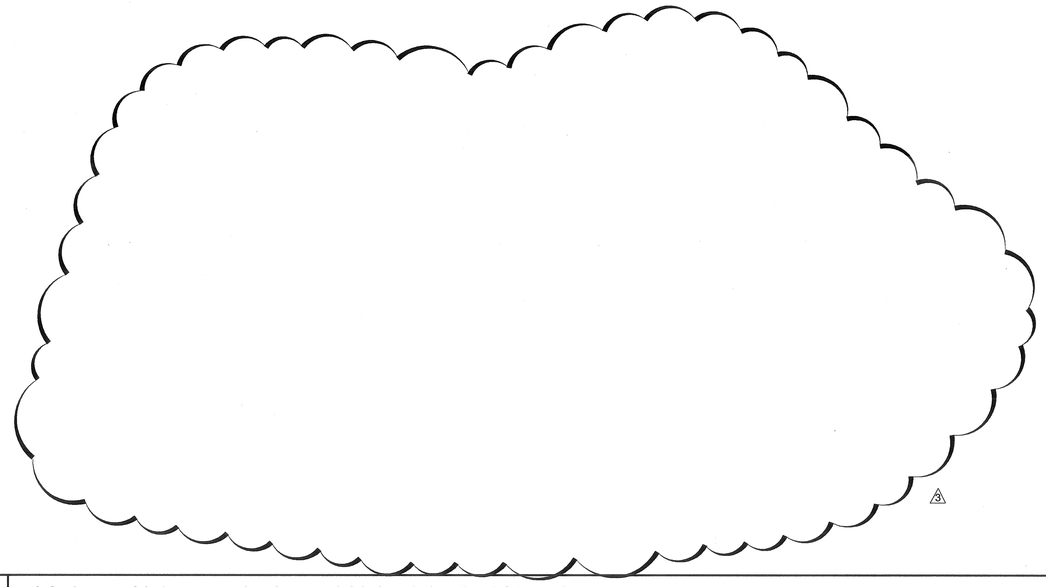

C HANDBALL COURT & WALL (NOT USED)

N.T.S.

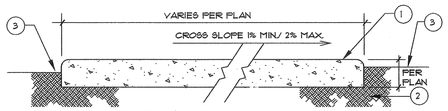

CONCRETE PAVING

1. CONCRETE PAVING APPLY 1/2" TOOLED RADIUS AT ALL EDGES
2. COMPACT SUBGRADE TO 90% RELATIVE DENSITY
3. FINISH GRADE 2" BELOW TOP OF WALK IN GROUNCOVER AREAS. 1" BELOW TOP OF WALK IN TURF AREAS.

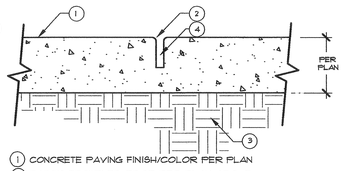

1. CONCRETE PAVING FINISH/COLOR PER PLAN
2. RADIUS TROWELED EDGE PER PLAN ABOVE
3. 90% COMPACTED SUBGRADE
4. AFTER PRELIMINARY TROWELING, THE CONCRETE SHALL BE PARTED W/ A STRAIGHT EDGE TO A DEPTH OF 1/2 OF THE CONCRETE THICKNESS REFER TO PLAN FOR LAYOUT

SCORE JOINT

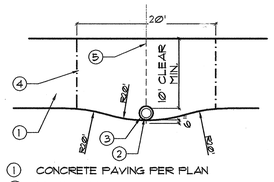

1. CONCRETE PAVING PER PLAN
2. LIGHT POLE
3. LIGHT POLE EXPOSED FOOTING (WHERE OCCURS)
4. SCORE JOINT WITH 1/4" RADIUS EDGE
5. SCORE JOINT WITH 1/8" RADIUS EDGE

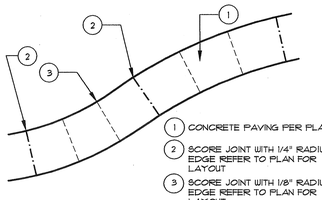

1. CONCRETE PAVING PER PLAN
2. SCORE JOINT WITH 1/4" RADIUS EDGE REFER TO PLAN FOR LAYOUT
3. SCORE JOINT WITH 1/8" RADIUS EDGE REFER TO PLAN FOR LAYOUT

SCORE JOINT LAYOUT

H CONCRETE PAVING, SCORE JOINT & LIGHT INSTALLATION

N.T.S.

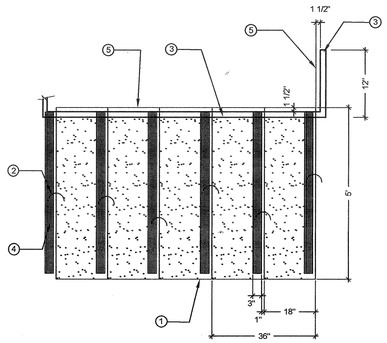

PLAN

1. SCORE JOINT
2. 6" CONCRETE STEP RISER (TYP.)
3. RAILING PER PLAN
4. SCORE 1/8" DEEP LINES 1/8" O.C. 3" WIDE ENTIRE LENGTH OF EACH STEP. PAINT W/ BLACK CONCRETE PAINT (2 COATS).
5. PLANTER WALL PER PLAN

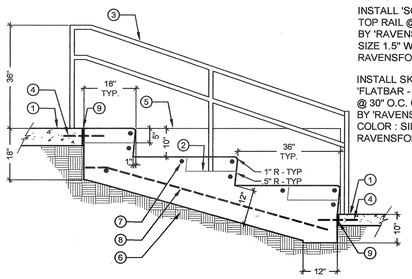

NOTES:
INSTALL 'SQUARE HANDRAIL GUARDS' ON TOP RAIL @ 30" O.C.
BY 'RAVENSFORGE' MODEL 'HGS'
SIZE 1.5" WIDE, COLOR: SILICON BRONZE.
RAVENSFORGE: 888-743-3490

INSTALL SKATEBOARD DETERRENT 'FLATBAR - 1.0" RADIUS CORNER' @ 30" O.C. ON ALL BLEACHER EDGES BY 'RAVENSFORGE' - MODEL: FB1.0R COLOR : SILICON BRONZE RAVENSFORGE 888-743-3490

SECTION

1. CONCRETE PAVING PER PLAN
2. CONCRETE STEP (TYP.)
3. RAILING PER PLAN
4. 12" LONG #4 REBAR @ 18" OC WRAP WITH A TAR PAPER.
5. RAISED PLANTER WALL PER PLAN
6. COMPACTED SUB-GRADE PER SOILS REPORT
7. #4 REBAR CONTINUOUS IN NOSE OF ALL STEPS/BLEACHERS (2" MIN. CLR.)
8. #4 REBAR @ 36" OC - CENTER IN SLAB
9. 1/2" PRE-MOLDED FOAM EXPANSION JOINT W/ POLYURETHANE CAULKING TO MATCH CONCRETE COLOR. SPRINKLE W/ SAND WHILE STILL WET.

D CONCRETE BLEACHERS & STAIRS

N.T.S.

RHA LANDSCAPE ARCHITECTS PLANNERS, INC.
3612 MISSION INN AVE
RIVERSIDE, CALIFORNIA
92501
LIC. #1512
PH. (951) 781-1930
FAX (951) 686-8091

© R.H.A. Landscape Architects-Planners, Inc. expressly reserves its common law copyright and other property rights in these plans. These plans are not to be reproduced, changed or copied in any form or manner whatsoever, nor are they to be assigned to any third party, without first obtaining the written permission and consent of R.H.A. Landscape Architects-Planners, Inc.

CLIENT:
THE CITY OF RIVERSIDE
PARK AND RECREATION DEPT.
3900 Main Street
Riverside, California 92522

PROJECT:
Reid Park Expansion
Orange St. and Garner Rd.

REVISIONS	DATE	BY
3 CONFORMED SET	9/5/06	MH

LICENSED LANDSCAPE ARCHITECT
DOUGLAS GROVE NO. 2978
Expiration 11/30/2007
CALIFORNIA
STATE OF CALIFORNIA

SHEET TITLE
CONSTRUCTION DETAILS

DESIGNED	MH
DRAWN	MH
CHECKED	DG
DATE	11-9-05
SCALE	PER PLAN
JOB NO.	03111

SHEET
CD-6
12 OF 19 SHEETS

[One Inch on Original Sheet] Drawing File: N:\Projects\03jobs\03111 Reid Park Expansion\Auto\CAD\RHA design\CD\FIelD Construction Set.08-30-06\03111 CD Sep 11, 2006 - 10:57am

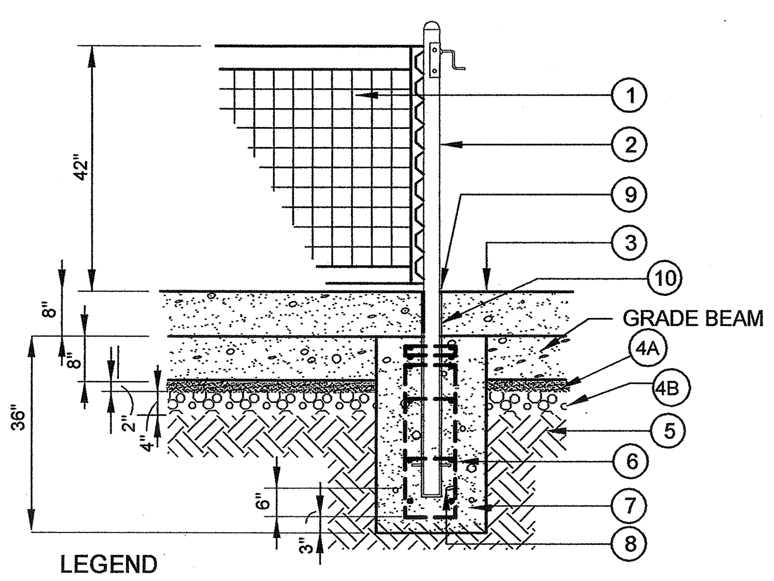

LEGEND

(1) NET - MODEL# 8353, CHAMPION NET MANUF. BY PW ATHLETIC (OR EQUAL) AVAILABLE: DAVE BANG ASSOCIATES/ 1-800-669-2585

INSTALL PW ATHLETIC MODEL 8371-20/FLUSH MOUNT CENTER NET TIE DOWN , IN CONCRETE, PER MFG. RECOMMENDATIONS (NOT SHOWN)

INSTALL PW ATHLETIC NET TIE DOWN STRAP MODEL 8371-30

(2) POST & CRANK - MODEL# 2205 PW ATHLETIC CO. (OR EQUAL) 3" SQ. POST - SECURED IN CONCRETE AS SHOWN

(3) CONCRETE SURFACE PER SPECS

(4A) 2" SAND BASE

(4B) 4" CLASS II AGGREGATE BASE

(5) 95% COMPACTED SUBGRADE

(6) 4 - #5 REBAR VERT W/ #3 REBAR TIES AT 12" O.C. MAX.

(7) CONCRETE FOOTING (TYP.) 2500 PSI (MIN)

(8) WELD (2) 1/2" DIA x 3" LONG STEEL PINS TO POST

(9) EXPANSION JOINT PER TENNIS COURT PAVING DETAIL BELOW

(10) PW MODEL 8305-01 MATCHING ALUMINUM SLEEVE FOR # 2205 SQ. POST

TENNIS COURT NET/POST

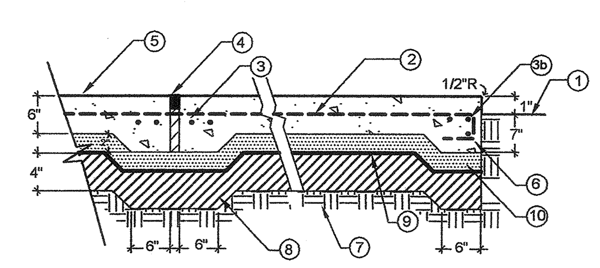

1. FINISH GRADE
2. #4 BAR 24" O.C. BOTH WAYS
3. #4 BAR CONT. (2 EACH)
3b. #4 BAR CONT. (3 EACH)
4. \" FOAM EXPANSION JOINT W/MASTIC PER PLAN
5. COURT FINISH (REFER TO PLAN & SPECIFICATIONS)
6. CONCRETE PAVING
7. 95% COMPACTED SUBSOIL
8. 95% COMPACTED CLASS II AGGREGATE BASE
9. 30 MIL. VISQUEEN VAPOR BARRIER
10. 95% COMPACTED SAND BASE

TENNIS COURT PAVING

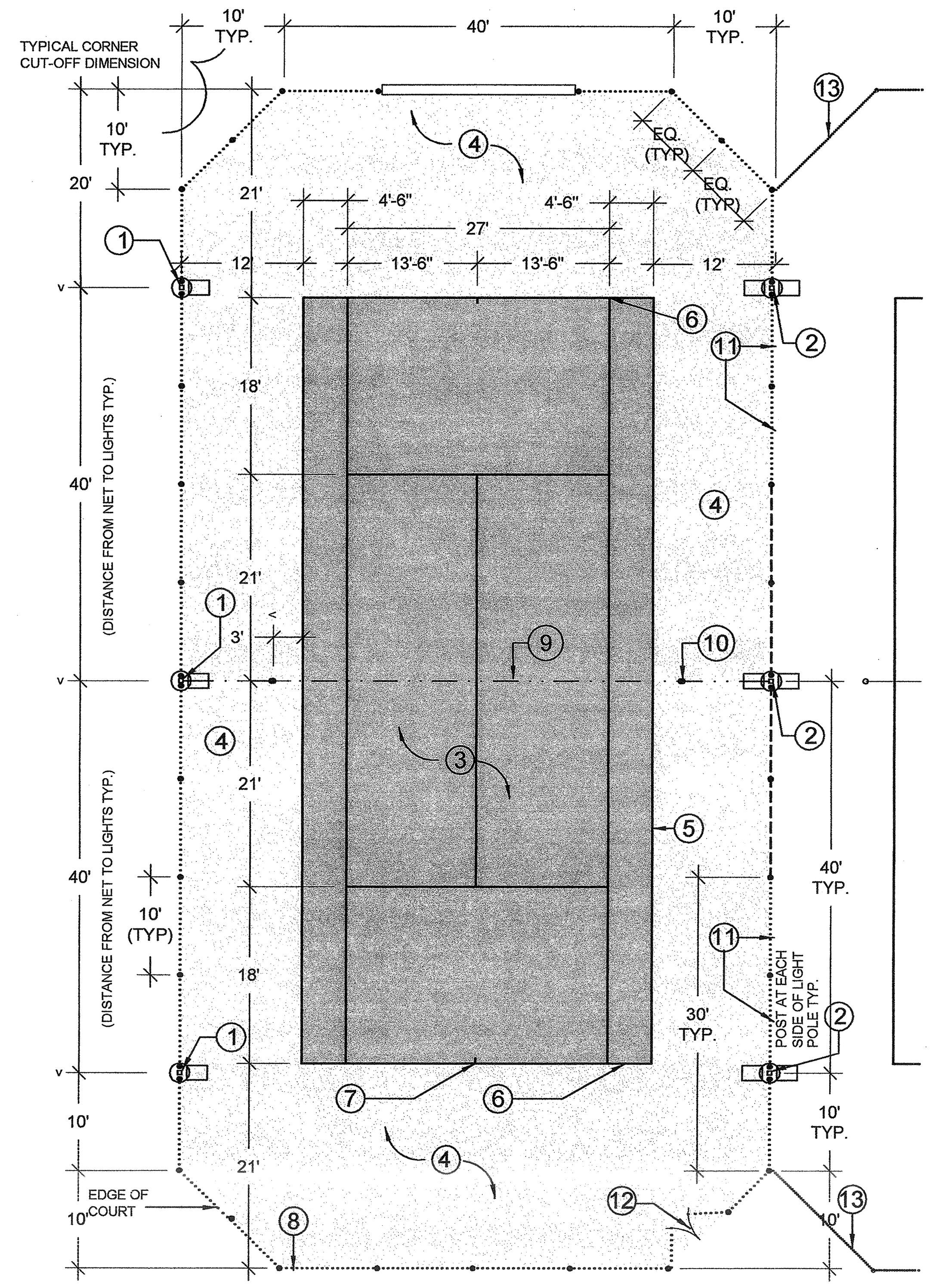

LEGEND

(1) SINGLE TENNIS COURT LIGHT - REFER TO ELECTRICAL PLAN. MATCH EXISTING LIGHT POLES.

(2) TWIN TENNIS COURT LIGHT - REFER TO ELECTRICAL PLAN. MATCH EXISTING LIGHT POLES.

(3) PLEXIPAVE COURT SURFACING - DARK GREEN COLOR (TO BE APPROVED BY CITY PRIOR TO INSTALLATION)

(4) PLEXIPAVE COURT SURFACING - CALIFORNIA RED COLOR (TO BE APPROVED BY CITY PRIOR TO INSTALLATION)

(5) 2" WIDE WHITE PLEXICOLOR LINE STRIPES

(6) 4" WIDE WHITE PLEXICOLOR (OR EQUAL) SERVICE LINE (TYPICAL)

(7) WHITE PLEXICOLOR (OR EQUAL) CENTER MARK

(8) 10' HIGH CHAINLINK FENCING WITH 9' WIND SCREEN OPEN MESH POLYPROPYLENE (GREEN) ENCLOSE THE OUTSIDE PERIMETER OF THE TENNIS COURTS AVAILABLE FROM TOMARK SPORTS. 800.371.1844 MODEL 11110. FABRIC SHALL HAVE FACTORY CUT WIND HOLES.

(9) EXPANSION JOINT PER TENNIS COURT PAVING DETAIL THIS SHEET.

(10) NET POST (REFER TO TENNIS COURT NET/POST DETAIL THIS SHEET

(11) 5' TALL CHAIN LINK FENCING - REFER TO SHEET L-3/ DETAIL 'B'

(12) 4' DOUBLE GATE PER DETAIL 'G', THIS SHEET

(13) EXISTING FENCE

NOTE: COURT DIMENSIONS AND STRIPPING PER USTA REFER TO TENNIS COURT PAVING DETAIL (LEFT) FOR CONCRETE SECTION

F TENNIS COURT LAYOUT & CONSTRUCTION

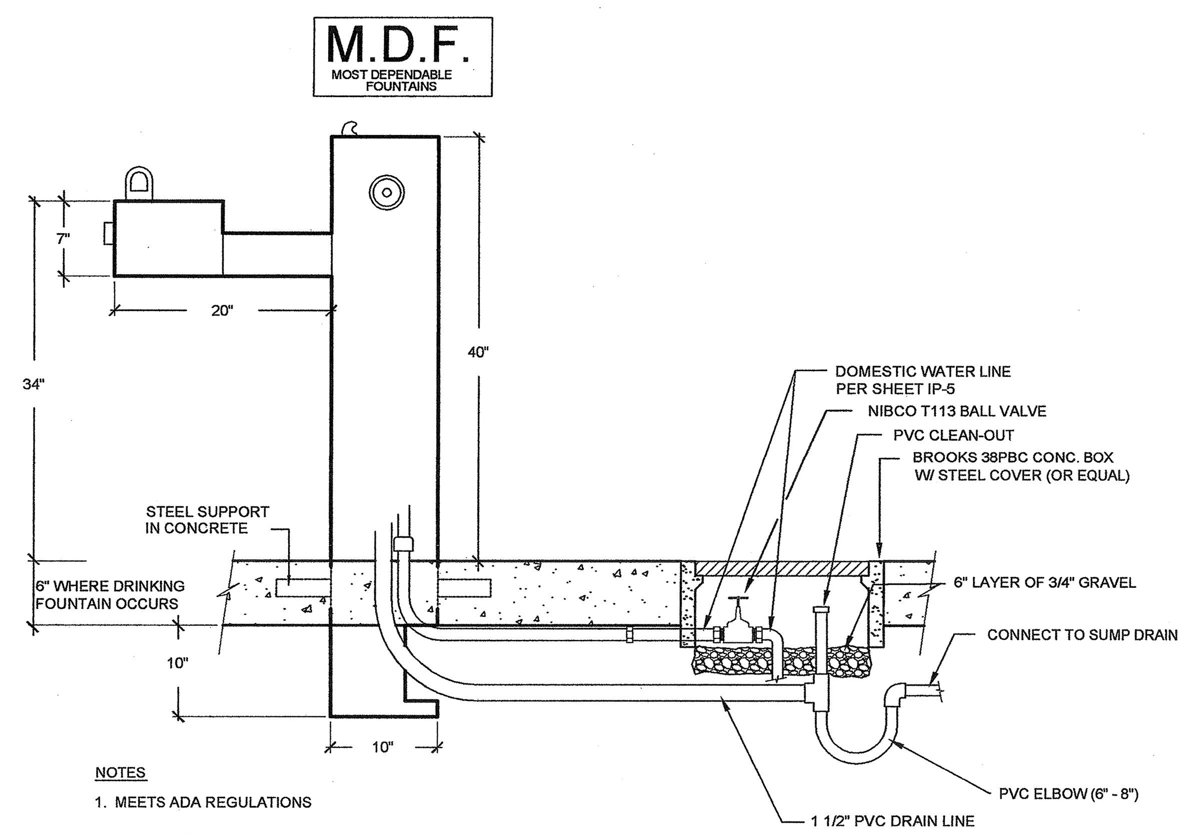

NOTES

1. MEETS ADA REGULATIONS
2. NOT TO SCALE
3. INSTALL ACCORDING TO MANUFACTURERS SPECIFICATIONS.

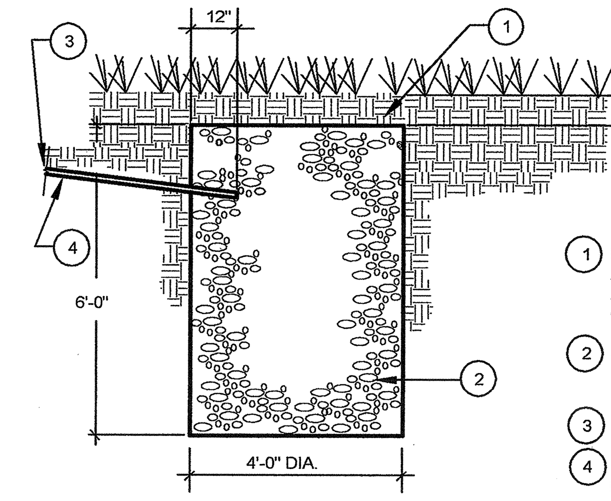

(1) PLACE 'FIBAR FELT' FABRIC, AVAILABLE FROM 'FIBAR SYSTEMS' AT (800) 342-2721, ON TOP AND ON ALL SIDES OF SUMP

(2) 4' DIA. X 6' DEEP GRAVEL SUMP DRAIN FILL WITH 3/4" GRAVEL

(3) TO DRINKING FOUNTAIN

(4) 4" PVC SCH 40 DRAIN LINE FROM DRINKING FOUNTAIN (1% MIN. SLOPE)

COORDINATE LOCATION OF DRINKING FOUNTAIN AND DRAINAGE SYSTEM WITH CITY MAINTENANCE SUPERINTENDENT.

C DRINKING FOUNTAIN & SUMP

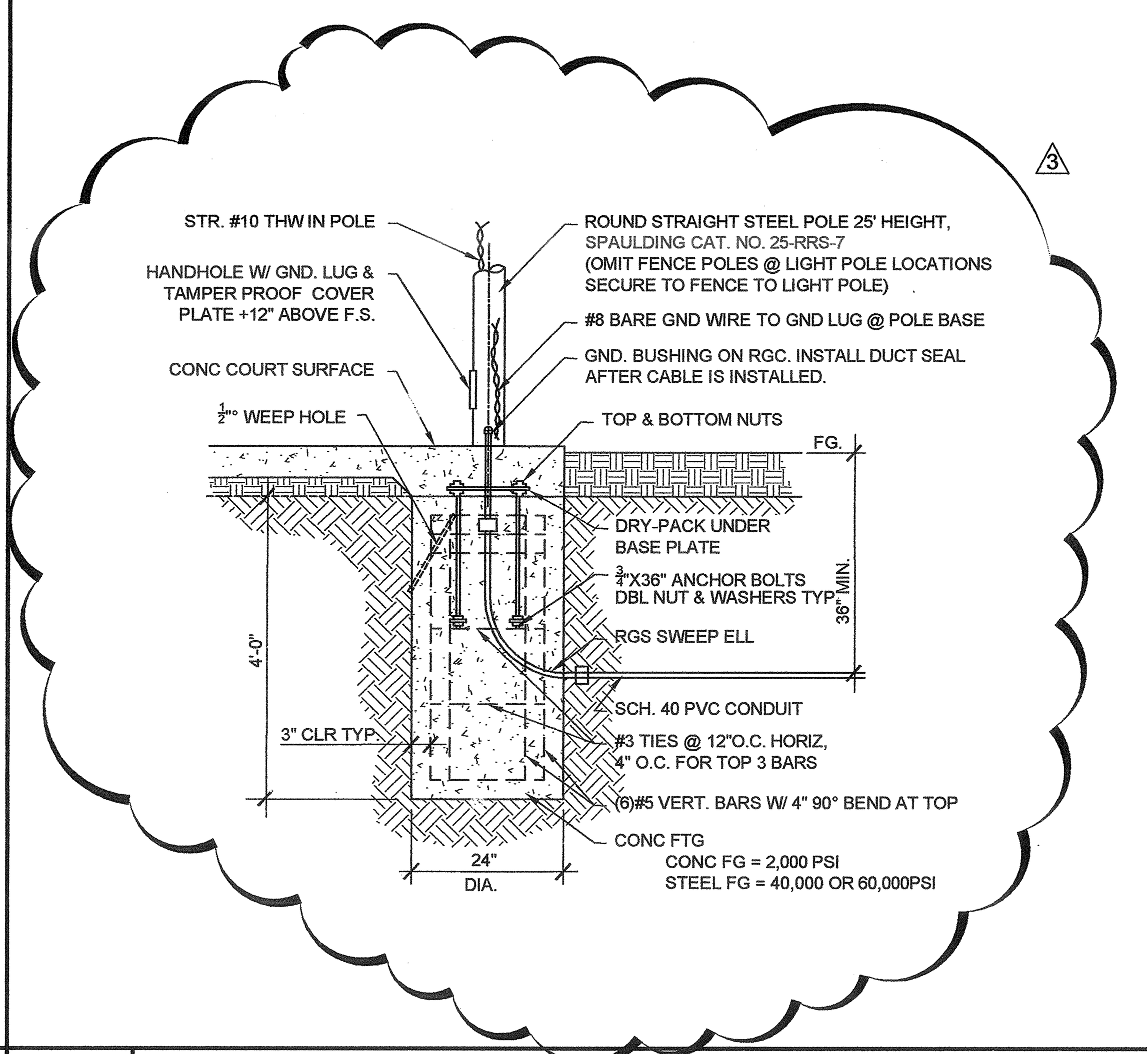

D TENNIS COURT FENCE POST

N.T.S.

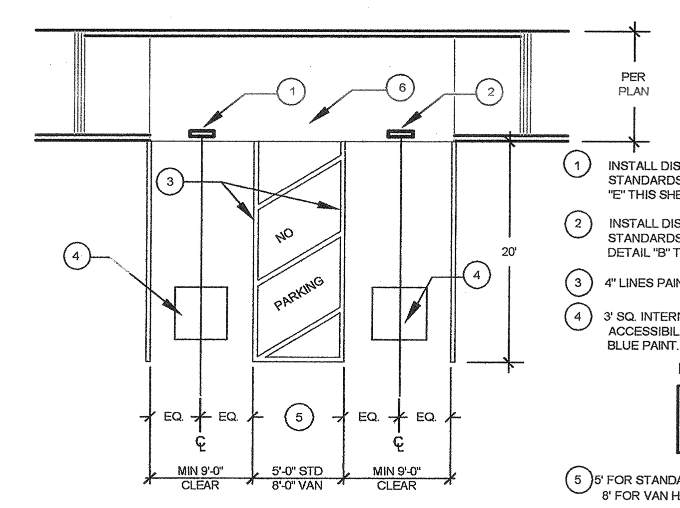

DISABLED PARKING STALLS

(1) INSTALL DISABLED VAN PARKING SIGN PER STATE STANDARDS, 3" FROM FACE OF CURB PER DETAIL "E" THIS SHEET.

(2) INSTALL DISABLED PARKING SIGN PER STATE STANDARDS, 3" FROM FACE OF CURB PER DETAIL "B" THIS SHEET.

(3) 4" LINES PAINTED BLUE

(4) 3' SQ. INTERNATIONAL SYMBOL OF ACCESSIBILITY STENCILED IN BLUE PAINT.

DISPLAY

(5) 5' FOR STANDARD H/C STALL 8' FOR VAN H/C STALL

(6) CONSTRUCT DISABLED ACCESS RAMP PER GRADING PLANS

NOTES:

INSTALL STRIPING FOR PARKING STALLS AND OTHER MARKINGS AS SHOWN ON PLANS IN ACCORDANCE WITH STANDARD PUBLIC WORKS SPECIFICATIONS.

STRIPING LAYOUT IS TYP. OF ALL STALLS.

A DISABLED PARKING

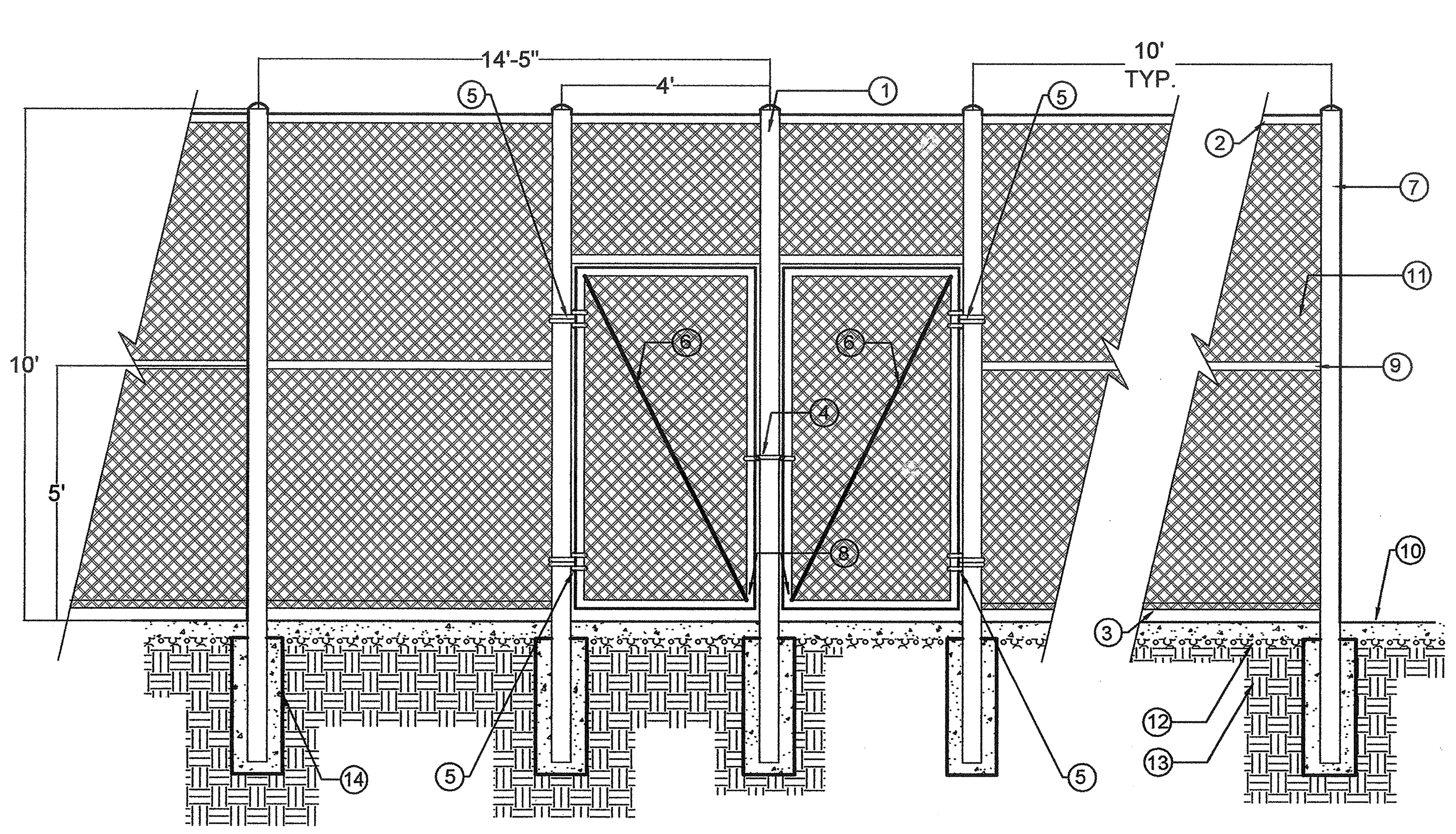

(1) CORNER POST FENCING, STEEL TUBING POSTS SPACED @ 10' O.C. MAX. CAPPED
(2) TOP RAIL
(3) BOTTOM RAIL
(4) SELF LATCHING LATCH FORK TYPE W LEVER
(5) SELF CLOSING HINGES - 8.5 LBS MAX FORCE (TYP)
(6) DIAGONAL BRACE
(7) LINE POST
(8) GATE FRAME
(9) MID RAIL
(10) COURT SURFACE PER SPECS & DETAILS ABOVE
(11) 9 GAUGE 2" SQ. GALV. MESH W/ FENCE FABRIC ON COURT SIDE
(12) CLS II BASE (REFER TO SOILS REPORT)
(13) COMPACTED SUBGRADE (REFER TO SOILS REPORT)
(14) CHAIN LINK FENCE POST CONCRETE FOOTING PER DETAIL 'D', SHEET CD-7 (REFER TO CHART BELOW FOR DEPTH)

CHAIN LINK FENCE TENNIS COURTS			
POST SIZE		FOOTING	
POSTS & RAILS	PIPE DIA.	FTG. DEPTH	FTG. DIA.
10' LINE	4.5" O.D.	5'-3"	1'-6"
10' END	4.5" O.D.	5'-3"	1'-6"
10' CORNER	4.5" O.D.	5'-3"	1'-6"
TOP, MIDDLE, BOTTOM RAILS	1.660" O.D.	-	-

CHAIN LINK FENCE MATERIALS

CHAIN LINK FABRIC-2" MESH, 9 GA. GALV. ASTM A392, CLASS 2

TRUSS RODS-3/8" GALV.

STRETCHER BAR-1/4"x3/4" GALV.

NOTES:
1. ALL CHAIN LINK FABRIC TO BE KNUCKLED SELVAGE TOP & BOT.
2. POST DIA. ARE STD. NOMINAL PIPE SIZE
3. TACK WELD ALL FASTENERS

ALL FENCE POSTS, GATE FRAMES, CHAIN LINK FABRIC & ALL STEEL PARTS SHALL BE HOT DIPPED GALV.

G FENCING / LIGHTING AT COURT EDGE DETAIL

N.T.S.

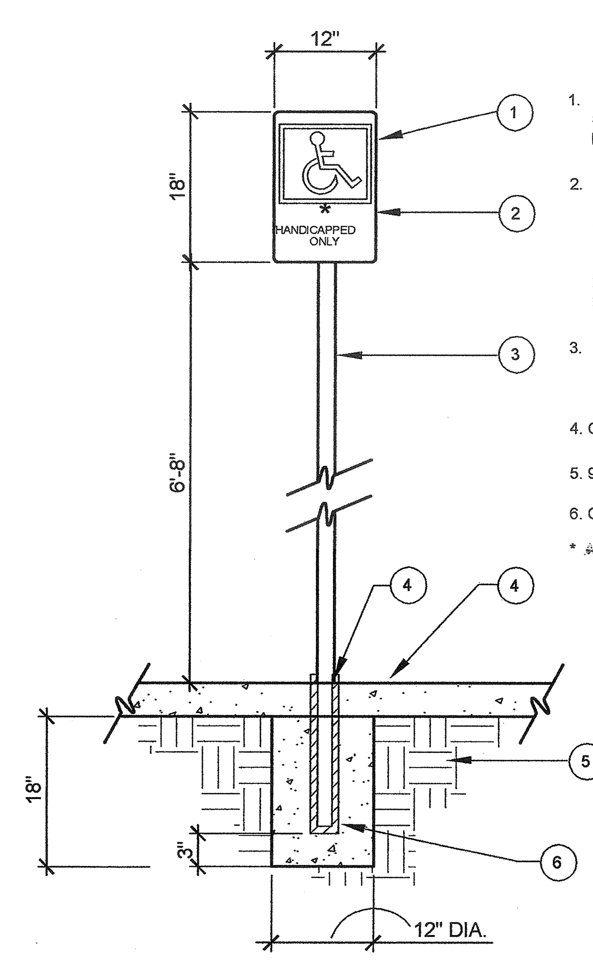

1. 16 GA. GALV. STL. SIGN W/3-1/8"DIA. X 3/4" SHEET METAL SCREWS. PAINT FASTENERS TO MATCH BACKGROUND.
2. INTERNATIONAL SYMBOL OF ACCESSIBILITY & GRAPHICS (WIDTH TO HEIGHT RATIO BETWEEN 3:5 & 1:1, STROKE WIDTH TO HEIGHT RATIO BETWEEN 1:5 & 1:10) ON BLUE BACKGROUND. BLUE SHALL BE EQUAL TO COLOR NO. 15090 IN FEDERAL STANDARD 5950.
3. 2" SQ. GALV. "QUICK PUNCH" POST W/ 30" ANCHOR SLEEVE (ALL POST MOUNTED SIGNS)
4. CONCRETE PAVING PER PLAN
5. 90% COMPACTED SUBGRAD
6. CONCRETE FOOTING

* ADD "VAN" ON VAN STALLS

E DISABLED PARKING STALL SIGN

N.T.S.

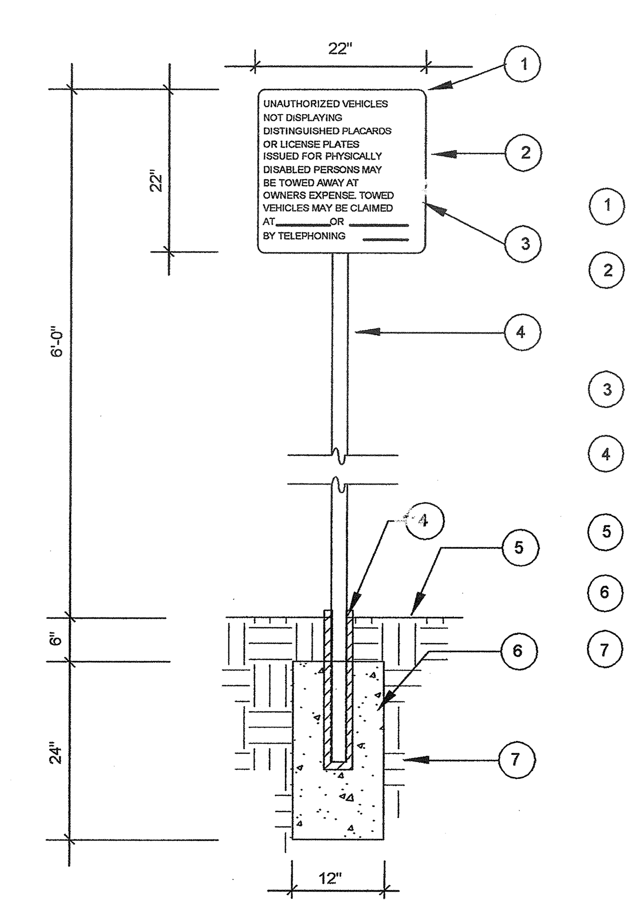

(1) 1" RAD. TYP.
(2) 1/4" THICK STEEL SIGN. PAINT DARK GREEN W/ WHITE LETTERS ATTACH TO POST W/ (2) 3/8" DIA. CARRIAGE BOLTS.
(3) 1" LETTERS (HELVETICA BOLD)
(4) 2" SQ. GALV. "QUICK PUNCH" POST W/ 30" ANCHOR SLEEVE (ALL POST MOUNTED SIGNS)
(5) FINISH GRADE
(6) CONCRETE FOOTING
(7) 90% COMPACTED SUBGRADE

B DISABLED PARKING LOT SIGN

N.T.S.

RHA LANDSCAPE ARCHITECTS PLANNERS. INC.

3612 MISSION INN AVE
RIVERSIDE, CALIFORNIA 92501
LIC. #1512
PH. (951) 781-1930
FAX (951) 686-8091

© R H A Landscape Architects-Planners, Inc. expressly reserves its common law copyright and other property rights in these plans. These plans are not to be reproduced, changed or copied in any form or manner whatsoever nor are they to be assigned to any third party without first obtaining the express written permission.

CLIENT:
THE CITY OF RIVERSIDE
PARK AND RECREATION DEPT.
3900 Main Street
Riverside, California 92522

PROJECT:
Reid Park Expansion
Orange St. and Garner Rd.

REVISIONS	DATE	BY
3 CONFORMED SET	9/5/06	MH

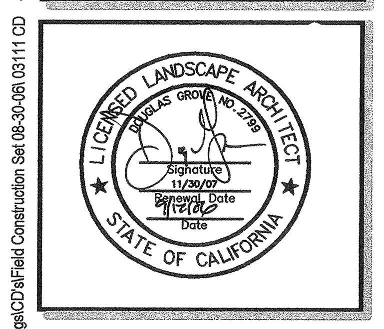

SHEET TITLE
CONSTRUCTION DETAILS

DESIGNED	MH
DRAWN	MH
CHECKED	DG
DATE	11-9-05
SCALE	PER PLAN
JOB NO.	03111

SHEET
CD-7
13 OF 19 SHEETS

[One Inch on Original Sheet] Drawing File: N:\Projects\03prj\03111 Reid Park Expansion\AutoCAD\RHA dwgs\CD's\Field Construction Set 08-30-06\03111 CD Sep 11, 2006 - 10:57am

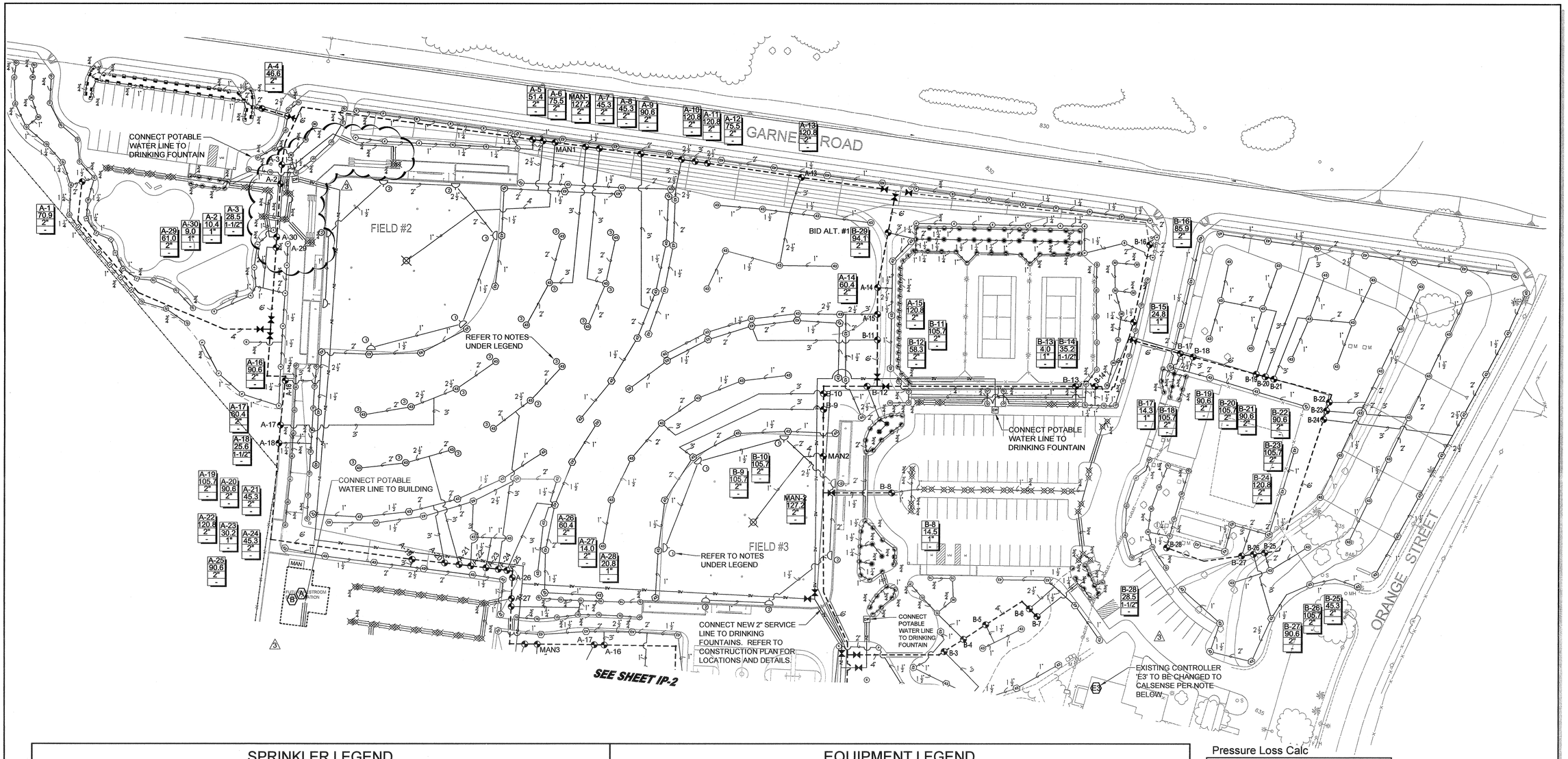

SPRINKLER LEGEND

SYMBOL	MANUFACTURER/MODEL #	NOZZLE	RAD.	PSI	FLOW (GPM) Q	H	F	VAN	DETAIL	NOTES
POP-UP SPRAY HEADS										
	RAINBIRD 1812-SAM-PRS-10	Q/H/F/VAN	9'-10'	30	.39	.79	1.58	.75-2.60	'F', ID-1	
	RAINBIRD 1806-SAM-PRS-8	Q/H/F/VAN	7'-8'	30	.26	.52	.44	.72-1.70	'F', ID-1	
	RAINBIRD 1806-SAM-PRS-10	Q/H/F/VAN	9'-10'	30	.39	.79	1.58	.75-2.60	'F', ID-1	
	RAINBIRD 1806-SAM-PRS-12	Q/H/F/VAN	11'-12'	30	.65	1.30	2.60	.65-2.60	'F', ID-1	
	RAINBIRD 1806-SAM-PRS-15	Q/H/F/VAN	13'-15'	30	.92	1.85	3.70	.92-3.70	'F', ID-1	
TREE FLOOD BUBBLER										
	RAINBIRD 1402 SERIES PRESSURE COMPENSATING TYPE			30	0.5 PER BUBBLER				'G', ID-1	
TURF POP-UP LARGE ROTOR HEADS										
	HUNTER I-40 ADS SERIES	43	57'	60	13.5				'A', ID-1	
	HUNTER I-40 36S SERIES	43	57'	60	13.5				'A', ID-1	SEE NOTE
	HUNTER I-20-6P-ADS-2.0SR	2.0SR	18'	50	2.0				'A', ID-1	
	HUNTER I-20-6P-ADS-1.5SR	1.5SR	25'	50	1.5				'A', ID-1	
	HUNTER I-20-6P-ADS-1.0	1.0	32'	60	1.3				'A', ID-1	
	HUNTER I-20-6P-ADS-2.0	2.0	36'	60	2.2				'A', ID-1	
	HUNTER I-20-6P-ADS-4.0	4.0	42'	60	4.6				'A', ID-1	
	HUNTER I-20-6P-36S-6.0	6.0	44'	60	6.0				'A', ID-1	
INFIELD HIGH-SPEED ROTOR HEADS										
	HUNTER I-25-ADSHS-18	18	53'	60	15.9				'A', ID-1	SEE NOTE
	HUNTER I-25-36SHS-18	18	53'	60	15.9				'A', ID-1	SEE NOTE

EQUIPMENT LEGEND

SYMBOL	MANUFACTURER/MODEL #	SIZE	DETAIL	NOTES
	NIBCO T-580 SERIES BALL VALVE - 2" AND SMALLER NIBCO F-619 SERIES GATE VALVE - 4" AND LARGER	LINE SIZE	'B', ID-1	-
	RAINBIRD #44LRC SERIES QUICK COUPLING VALVE	1"	'C', ID-1	-
	GRISWOLD 2000 SERIES REMOTE CONTROL ELECTRIC VALVE	PLAN SIZE	'D', ID-1	(5)
A B	INSTALL TWO(2) CALSENSE ET2000-32-ML-FL-RR-TPP-SSBP-LRDOMERR CONTROLLERS WITH RADIO COMMUNICATION CAPABILITIES. REFER TO NOTES ON SHEET ID-1.	32	'H', ID-1	(2)
MAN	INSTALL MANUAL TIMER FOR EACH FIELD FOR INFIELD IRRIGATION SYSTEM. INSTALL IN 'StrongBox' MODEL #SB-16SSW STAINLESS STEEL WALL MOUNT BOX AND MOUNT ON EXTERIOR OF BUILDING.	3 STA.	-	-
	CLS 315 PVC IRRIGATION PRESSURE MAINLINE	PLAN SIZE	'E', ID-1	(4)
	CLS 200 PVC NON-PRESSURE IRRIGATION LATERAL LINE	PLAN SIZE	'E', ID-1	-
	SCH 80 PVC IRRIGATION PIPE OR WIRE SLEEVE	CHART	'E', ID-1	-
NOT SHOWN	UF RATED CONTROL WIRE, 12 GA COMMON, 14 GA PILOT. PROVIDE 3 SPARE WIRES TO FURTHEST VALVES.	12/14 GA	N/A	-
	EXISTING PVC IRRIGATION PRESSURE MAINLINE	-	-	PROTECT IN PLACE
—SV—	SCH 40 PVC DOMESTIC WATER SERVICE LINE	2"	'E', ID-1	-

(1) EXISTING HEADS TO BE PROTECTED IN PLACE. HEADS THAT ARE DAMAGED OR REMOVED DURING CONSTRUCTION SHALL BE REPLACED WITH EQUAL.
(2) SEE CONTROLLER NOTE ON SHEET IP-2
(3) NOT USED
(4) INSTALL MAINLINE 3' FROM EDGE OF PAVING.
(5) INSTALL VALVE BOXES WITH A MINIMUM OF 3' BETWEEN EACH BOX.

CONTROLLER — A-1 — STATION #
FLOW (GPM) — 0.0
2" — VALVE SIZE
-

Pressure Loss Calc

Valve B-24	120.8 GPM
Master Valve 3"	5.3 PSI
Mainline 6"	5.8 PSI
Gate Valve	2.0 PSI
Valve 2"	6.8 PSI
Lateral Line	5.5 PSI
Fittings	1.1 PSI
25' in Elevation Change	10.8 PSI
Total Loss	37.3 PSI
Head Pressure Required	60.0 PSI
Minimum Required Pressure	97.3 PSI
Pressure after Pump	110.0 PSI
Residual Pressure	12.7 PSI

Pressure Loss Calc

Valve A-11	120.8 GPM
Master Valve 3"	5.3 PSI
Mainline 6"	4.4 PSI
Gate Valve	3.0 PSI
Valve 2"	6.8 PSI
Lateral Line	3.2 PSI
Fittings	1.0 PSI
25' in Elevation Change	5.2 PSI
Total Loss	28.9 PSI
Head Pressure Required	60.0 PSI
Minimum Required Pressure	88.9 PSI
Pressure after Pump	110.0 PSI
Residual Pressure	21.1 PSI

Underground Service Alert

CALL BEFORE YOU DIG

Call: TOLL FREE
1-800
227-2600

TWO WORKING DAYS BEFORE YOU DIG

SCH 80 PVC SLEEVING CHART

1 1/4" SLEEVE	1-4 WIRES	1/2" PIPE
1 1/2" SLEEVE	5-10 WIRES	3/4" PIPE
2" SLEEVE	11-20 WIRES	1" PIPE
2 1/2" SLEEVE	21-30 WIRES	1 1/4" PIPE
3" SLEEVE	31-40 WIRES	1 1/2" PIPE
4" SLEEVE	41-60 WIRES	2" PIPE
6" SLEEVE	61-99 WIRES	2 1/2"/3" PIPE
8" SLEEVE	100+ WIRES	4" PIPE
10" SLEEVE	N/A	6" PIPE

IRRIGATION INFORMATION

APPROX. STATIC PRESSUE: 55 PSI

PRESSURE WITH PUMP BOOST: 110 PSI.

MAXIMUM DEMAND: 400 GPM

STATIC PRESSURE BASED ON THE INFORMATION SHOWN ON IRRIGATION AS-BUILT PLANS DATED 3/31/92.

INFIELD IRRIGATION HEAD NOTES:
1. INSTALL HEAD / QUICK COUPLER IN TURF AREA 6" FROM EDGE OF INFIELD MIX.
2. INSTALL HEAD WITH 3" CONCRETE COLLAR FLUSH WITH ADJACENT PAVING

OUTFIELD IRRIGATION HEAD NOTES:
3. PROVIDE AN ADDITIONAL 1" THREADED AND CAPPED STUB-OUT FOR FUTURE ADDITION OF ROTOR AT EACH SPRINKLER IDENTIFIED.

0' 40' 80' 120'

RHA
LANDSCAPE ARCHITECTS PLANNERS, INC.
3612 MISSION INN AVE
RIVERSIDE, CALIFORNIA 92501
LIC. #1512
PH. (951) 781-1930
FAX (951) 686-8091

© R.H.A. Landscape Architects-Planners, Inc. expressly reserves its common law copyright and other property rights in these plans. These plans are not to be reproduced, changed or copied in any form or manner whatsoever, nor are they to be assigned to any third party, without first obtaining the written permission and consent of R.H.A. Landscape Architects-Planners, Inc.

CLIENT:
THE CITY OF RIVERSIDE
PARK AND RECREATION DEPT.
3900 Main Street
Riverside, California 92522

PROJECT:
Reid Park Expansion
Orange St. and Garner Rd.

REVISIONS	DATE	BY
3 CONFORMED SET	9/5/06	MH

LICENSED LANDSCAPE ARCHITECT
DOUGLAS GROVE NO. 2512
Signature
11/29/07
Date
STATE OF CALIFORNIA

SHEET TITLE
IRRIGATION PLAN

DESIGNED	MH
DRAWN	MH
CHECKED	DG
DATE	11-9-05
SCALE	PER PLAN
JOB NO.	03111

SHEET
IP-1
14 OF 19 SHEETS

[One Inch on Original Sheet] Drawing File: N:\Projects\03prj\03111 Reid Park Expansion\AutoCAD\RHA dwgs\CD's\Field Construction Set 08-30-06\03111 IP Sep 12, 2006 - 9:34am

N:\Projects\03prj\03111 Reid Park Expansion\AutoCAD\RHA dwgs\CD's\Field Construction Set 08-30-06\03111 IP.dwg

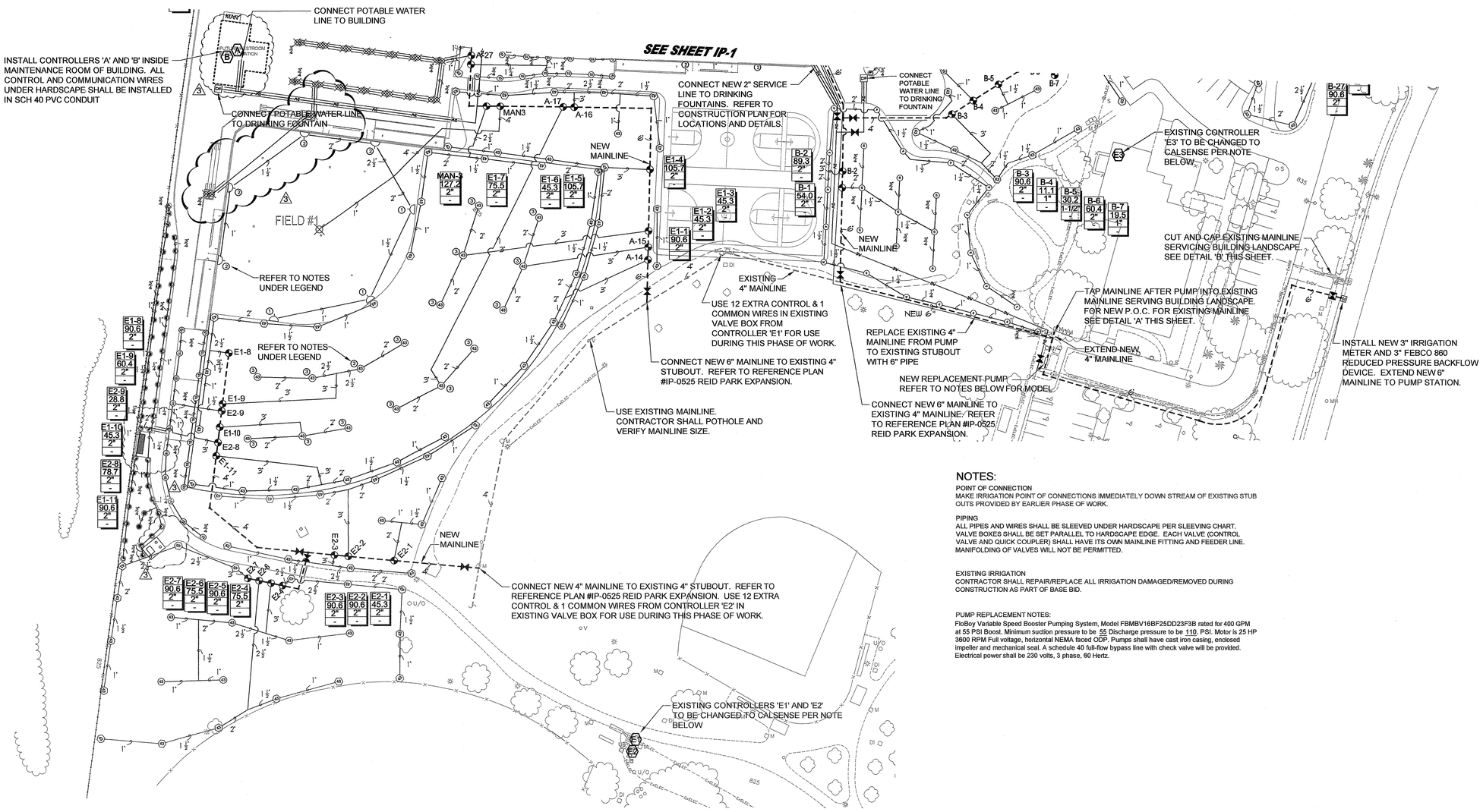

NOTES:

POINT OF CONNECTION
MAKE IRRIGATION POINT OF CONNECTIONS IMMEDIATELY DOWN STREAM OF EXISTING STUB OUTS PROVIDED BY EARLIER PHASE OF WORK.

PIPING
ALL PIPES AND WIRES SHALL BE SLEEVED UNDER HARDSCAPE PER SLEEVING CHART. VALVE BOXES SHALL BE SET PARALLEL TO HARDSCAPE EDGE. EACH VALVE (CONTROL VALVE AND QUICK COUPLER) SHALL HAVE ITS OWN MAINLINE FITTING AND FEEDER LINE. MANIFOLDING OF VALVES WILL NOT BE PERMITTED.

EXISTING IRRIGATION
CONTRACTOR SHALL REPAIR/REPLACE ALL IRRIGATION DAMAGED/REMOVED DURING CONSTRUCTION AS PART OF BASE BID.

PUMP REPLACEMENT NOTES:
FloBoy Variable Speed Booster Pumping System, Model FBMBV16BF25DD23F3B rated for 400 GPM at 55 PSI Boost. Minimum suction pressure to be 55 Discharge pressure to be 110 PSI. Motor is 25 HP 3600 RPM Full voltage, horizontal NEMA faced ODP. Pumps shall have cast iron casing, enclosed impeller and mechanical seal. A schedule 40 full-flow bypass line with check valve will be provided. Electrical power shall be 230 volts, 3 phase, 60 Hertz.

CONTROLLER NOTES:
EXISTING CONTROLLER 'E3' SHALL BE REPLACED WITH CALSENSE ET2000. CONTROLLER SHALL BE WALL MOUNTED UTILIZING CALSENSE FACTORY ASSEMBLED 'SSBP' AND CONNECTED TO EXISTING POWER WIRES.

CONTROLLER SHALL BE FURNISHED AS:
Controller E3.....ET2000-24-ML-FL-RR-TPP-SSBP-LRDOMERR

EXISTING CONTROLLERS 'E1' AND 'E2' SHALL BE REPLACED WITH CALSENSE ET2000-32 CONTROLLERS SHALL BE INSTALLED ON PLYWOOD BACKBOARD PER CALSENSE SPECIFICATIONS, AND CONNECTED TO EXISTING POWER WIRES. WIRE CONTROLLER PER DETAIL 'I', SHEET ID-1.

CONTROLLER SHALL BE FURNISHED AS:
Controller E1.....ET2000-32-MLR-FL-RR-TPP-LRDOMERR
Controller E2.....ET2000-32-ML-FL-RR-TPP-LRDOMERR

CONTROLLER ASSEMBLY IS AVAILABLE FROM 'UNITED GREEN TECH', MARK DELANGE @ 909-794-4511

CONTROLLER SHALL BE MOUNTED, WIRED, AND GROUNDED PER MANUFACTURER'S DIRECTIONS. 120V POWER FOR CONTROLLER TO BE PROVIDED BY OTHERS. CONTRACTOR SHALL MAKE ALL FINAL CONNECTIONS PER LOCAL CODES.

ALL FIVE CONTROLLERS WILL BE CONNECTED (DAISY-CHAINED) WITH Paige P-7171-D CABLING, IN CONDUIT, FOR COMMUNICATIONS PURPOSES.

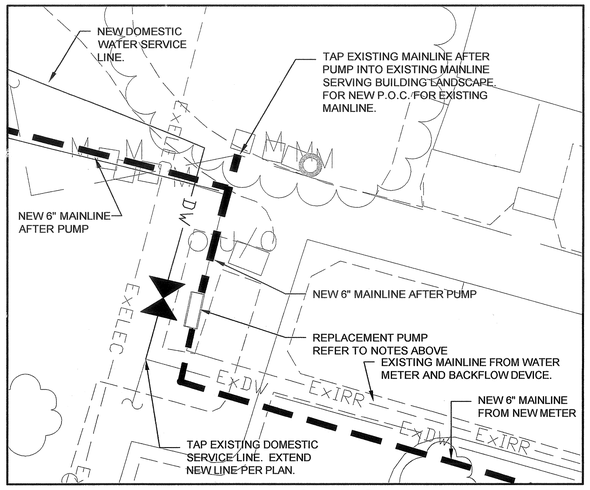

DETAIL 'A' - EX. IRRIGATION NEW P.O.C.

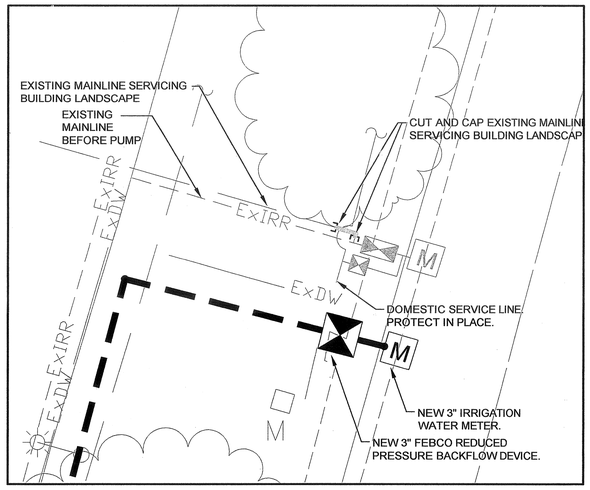

DETAIL 'B' - CUT AND CAP EX. IRRIGATION

0' 40' 80' 120'

RHA LANDSCAPE ARCHITECTS PLANNERS, INC.
3612 MISSION INN AVE
RIVERSIDE, CALIFORNIA 92501
LIC. #1512
PH. (951) 781-1930
FAX (951) 686-8091

© R.H.A. Landscape Architects-Planners, Inc. expressly reserves its common law copyright and other property rights in these plans. These plans are not to be reproduced, changed or copied in any form or manner whatsoever, nor are they to be assigned to any third party without first obtaining the express written permission

CLIENT:
THE CITY OF RIVERSIDE
PARK AND RECREATION DEPT.
3900 Main Street
Riverside, California 92522

PROJECT:
Reid Park Expansion
Orange St. and Garner Rd.

REVISIONS	DATE	BY
3 CONFORMED SET	9/5/06	MH

LICENSED LANDSCAPE ARCHITECT
DOUGLAS GRAY No. 2512
STATE OF CALIFORNIA

SHEET TITLE
IRRIGATION PLAN

DESIGNED	MH
DRAWN	MH
CHECKED	DG
DATE	11-9-05
SCALE	PER PLAN
JOB NO.	03111

SHEET
IP-2
15 OF 19 SHEETS

[One Inch on Original Sheet] Drawing File: N:\Projects\03prj\03111 Reid Park Expansion\AutoCAD\RHA dwgs\CD's\Field Construction Set 08-30-06\03111 IP Sep 12, 2006 - 8:30am

N:\Projects\03prj\03111 Reid Park Expansion\AutoCAD\RHA dwgs\CD's\Field Construction Set 08-30-06\03111 IP.dwg

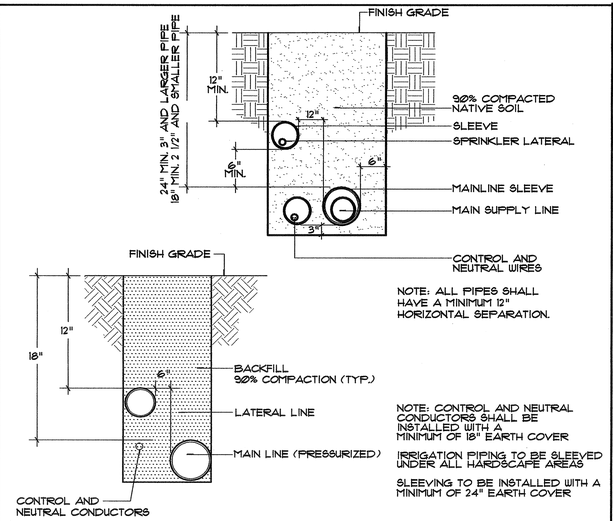

F SLEEVING & TRENCHING N.T.S.

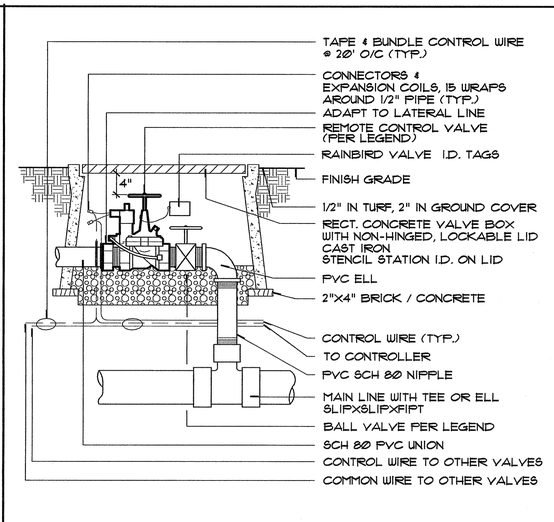

D ELECTRIC CONTROL VALVE N.T.S.

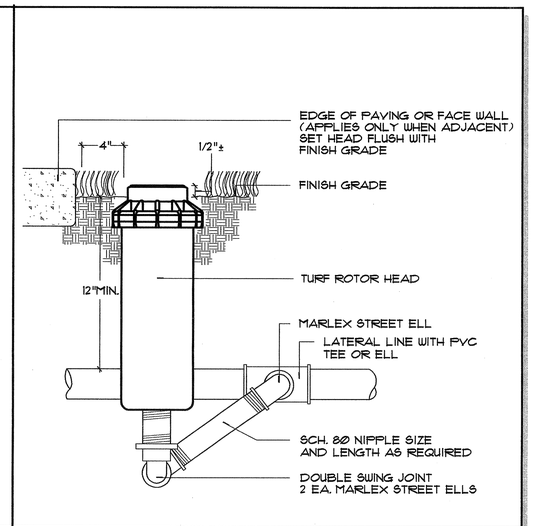

A TURF POP ROTOR N.T.S.

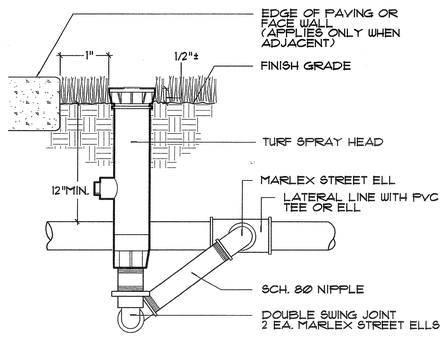

SWING JOINT ASSEMBLY AND LATERAL LINE FITTING OUTLET TO BE SAME SIZE AS INLET ON BOTTOM OF HEAD.

G TURF POP-UP HEAD N.T.S.

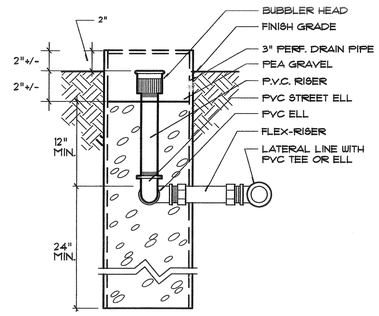

E TREE PLANTER BUBBLER N.T.S.

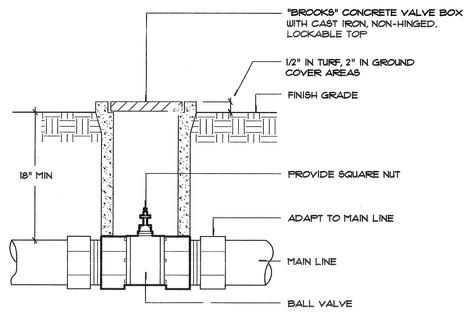

B BALL/GATE VALVE N.T.S.

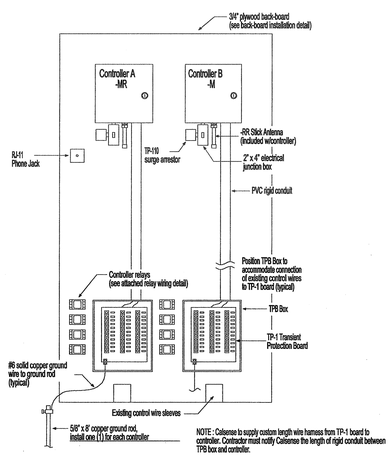

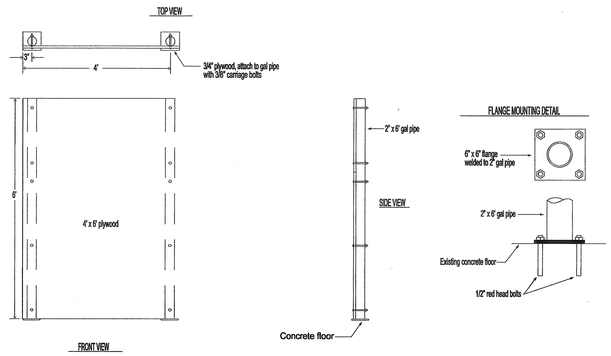

MAINLINE BREAK PROTECTION ONLY

1. Controllers are able to irrigate at the same time.
2. Controller A is programmed for NORMALLY OPEN master valve.
3. Only Controller A is wired to the flow meter.
4. Controller A is programmed as a master controller, with mainline break number set.
5. Controller A MUST have ALL programs set with pump on.
6. Controller B, E1 & E2 enable pump as needed.
7. Controllers B, E1 & E2 are programmed for normally closed master valve.
8. Station 32 on each controller must use Program Drip 1 or Drip 2. DO NOT assign any other stations to the Program used for station 32.
9. Relays are Dayton 5X823E, with socket base 5X852E.

H CONTROLLER MOUNTING N.T.S.

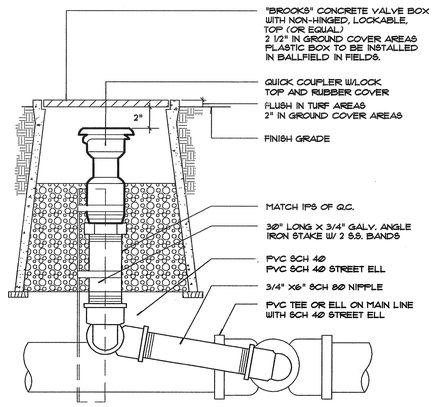

Underground Service Alert
CALL BEFORE YOU DIG
CALL TOLL FREE
1-800
422-4133
TWO WORKING DAYS BEFORE YOU DIG

C QUICK COUPLER

I

© R. H. A. Landscape Architects-Planners, Inc. expressly reserves its common law copyright and other property rights in these plans. These plans are not to be reproduced, changed or copied in any form or manner whatsoever, nor are they to be assigned to any third party without first obtaining the express written permission

RHA
LANDSCAPE ARCHITECTS PLANNERS, INC.
3612 MISSION INN AVE
RIVERSIDE, CALIFORNIA 92501
LIC. #1512
PH. (951) 781-1930
FAX (951) 686-8091

CLIENT:
THE CITY OF RIVERSIDE
PARK AND RECREATION DEPT.
3900 Main Street
Riverside, California 92522

PROJECT:
Reid Park Expansion
Orange St. and Garner Rd.

REVISIONS	DATE	BY

LICENSED LANDSCAPE ARCHITECT
RONALD GROVE, REGISTRATION NO. 2513
Registration Expiration 11/30/09
Renewal date
Circle
Date
STATE OF CALIFORNIA

SHEET TITLE
IRRIGATION DETAILS

DESIGNED	MH
DRAWN	MH
CHECKED	DG
DATE	11-9-05
SCALE	PER PLAN
JOB NO.	03111

SHEET
ID-1
16 OF 19 SHEETS

[One Inch on Original Sheet] Drawing File: N:\Projects\03p\03111 Reid Park Expansion\AutoCAD\RHA dwg\IC2\FieldConstruction Set 09-30-06\03111ID (no wiring diagram) Sep 12, 2006 - 9:44am

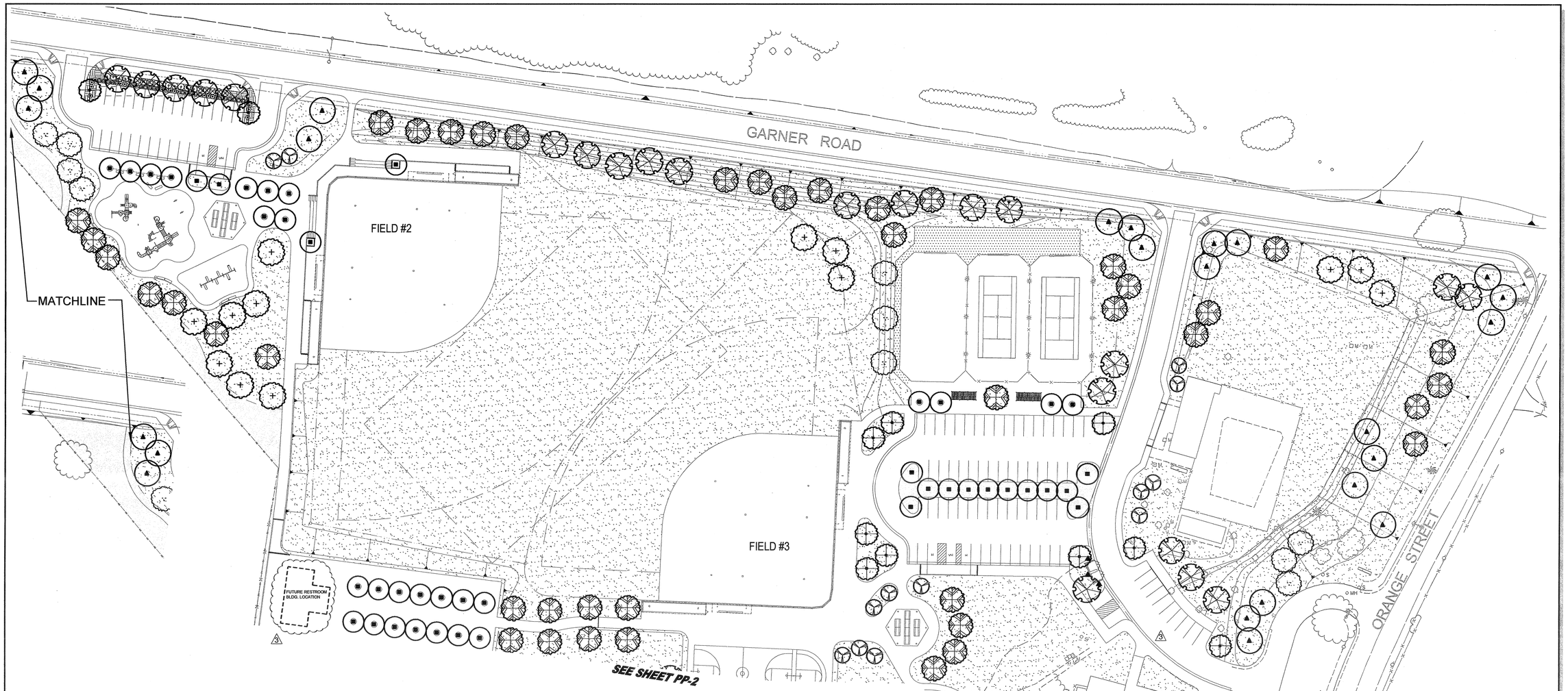

SYMBOL	EVERGREEN/ DECIDUOUS	BOTANICAL NAME COMMON NAME	SIZE	SPACING	REMARKS	REFERENCE	MINIMUM SPEC'S (HEIGHT X WIDTH)
TREES							
	D	PODOCARPUS GRACILIOR FERN PINE	24" BOX	REFER TO PLAN	STANDARD	REFER TO DETAIL 'A' & 'B' SHEET PD-1	9-10' X 3-4'
	D	LAGERSTROEMIA HYBRID 'MUSKOGEE' MUSKOGEE HYBRID CRAPE MYRTLE	24" BOX	REFER TO PLAN	STANDARD	REFER TO DETAIL 'A' & 'B' SHEET PD-1	9-10' X 3-4'
	E	JACARANDA MIMOSIFOLIA JACARANDA	24" BOX	REFER TO PLAN	STANDARD	REFER TO DETAIL 'A' & 'B' SHEET PD-1	9-11' X 4-5'
	D	KOELREUTERIA BIPINNATA CHINESE FLAME TREE	24" BOX	REFER TO PLAN	STANDARD	REFER TO DETAIL 'A' & 'B' SHEET PD-1	10-12' X 3-4'
	D	FRAXINUS VELUTINA ARIZONA ASH	24" BOX	REFER TO PLAN	STANDARD	REFER TO DETAIL 'A' & 'B' SHEET PD-1	10-12' X 4-5'
	D	CHIONANTHUS RETUSUS CHINESE FRINGE TREE	24" BOX	REFER TO PLAN	STANDARD	REFER TO DETAIL 'A' & 'B' SHEET PD-1	9-11' X 3-4'
	E	QUERCUS RUBRA RED OAK	24" BOX	REFER TO PLAN	STANDARD	REFER TO DETAIL 'A' & 'B' SHEET PD-1	9-11' X 3-4'
	D	SAPIUM SEBIFERUM CHINESE TALLOW TREE	24" BOX	REFER TO PLAN	STANDARD	REFER TO DETAIL 'A' & 'B' SHEET PD-1	9-10' X 3-4'
SHRUBS							
		CISTUS PURPUREUS ORCHID ROCKROSE	5 GAL	REFER TO PLAN	FULL & BUSHY	REFER TO DETAIL 'A' & 'C' SHEET PD-1	
		DIETES VEGETA FORTNIGHT LILY	5 GAL	REFER TO PLAN	FULL & BUSHY	REFER TO DETAIL 'A' & 'C' SHEET PD-1	
		ELEAGNUS PUNGENS SILVERBERRY	5 GAL	REFER TO PLAN	FULL & BUSHY	REFER TO DETAIL 'A' & 'C' SHEET PD-1	
		PITTOSPORUM TOBIRA 'VARIEGATA' VARIEGATED MOCK ORANGE	5 GAL	REFER TO PLAN	FULL & BUSHY	REFER TO DETAIL 'A' & 'C' SHEET PD-1	
VINES							
		PARTHENOCISSUS TRICUSPIDATA BOSTON IVY	1 GAL	REFER TO PLAN	FULL ON STAKE & BUSHY	REFER TO DETAIL 'D' SHEET PD-1	
GROUND COVERS							
		HYDROSEEDED TURF				REFER TO SPECIFICATIONS	
		HYDROSEEDED TURF INSTALL AS PART OF BASE BID. PRICE FOR SOIL PREP., WEED ABATEMENT AND HYDROSEEDING IN THIS AREA SHALL BE DEDUCTED FROM THE PRICE TO CONSTRUCT ADDITIVE ALTERNATE #1 ON SHEET CP-1.				REFER TO SPECIFICATIONS	
		MYOPORUM PARVIFOLIUM 'PINK' PINK MYOPORUM	ROOTED CUTTINGS	12" O.C.		REFER TO SPECIFICATIONS	
		2" DEPTH LAYER OF 'PLANTS CHOICE' COARSE BRUSH MULCH					

NOTES:

1. A 2" DEPTH LAYER OF 'PLANTS CHOICE' COARSE BRUSH MULCH IS TO BE INSTALLED IN ALL GROUNDCOVER AND SHRUB PLANTING AREAS.

0' 40' 80' 120'

RHA LANDSCAPE ARCHITECTS PLANNERS, INC.
3612 MISSION INN AVE
RIVERSIDE, CALIFORNIA 92501
LIC. #1512
PH. (951) 781-1930
FAX (951) 686-8091

© R.H.A. Landscape Architects-Planners, Inc. expressly reserves its common law copyright and other property rights in these plans. These plans are not to be reproduced, changed or copied in any form or manner whatsoever, nor are they to be assigned to any third party without first obtaining the express written permission of R.H.A. Landscape Architects-Planners, Inc.

CLIENT:
THE CITY OF RIVERSIDE
PARK AND RECREATION DEPT.
3900 Main Street
Riverside, California 92522

PROJECT:
Reid Park Expansion
Orange St. and Garner Rd.

REVISIONS	DATE	BY
3 CONFORMED SET	9/5/06	MH

LICENSED LANDSCAPE ARCHITECT
DOUGLAS GRONE NO. 2292
Signature
11/29/06
Expiration Date
Date
STATE OF CALIFORNIA

SHEET TITLE
PLANTING PLAN

DESIGNED	MH
DRAWN	MH
CHECKED	DG
DATE	11-9-05
SCALE	PER PLAN
JOB NO.	03111

SHEET
PP-1
17 OF 19 SHEETS

(One Inch on Original Sheet) Drawing File: N:\Projects\03pp\03111 Reid Park Expansion\Auto\CAD\RHA sheets\CD's\Field Construction Set 08-30-06\03111 PP Sep 11, 2006 - 11:01am

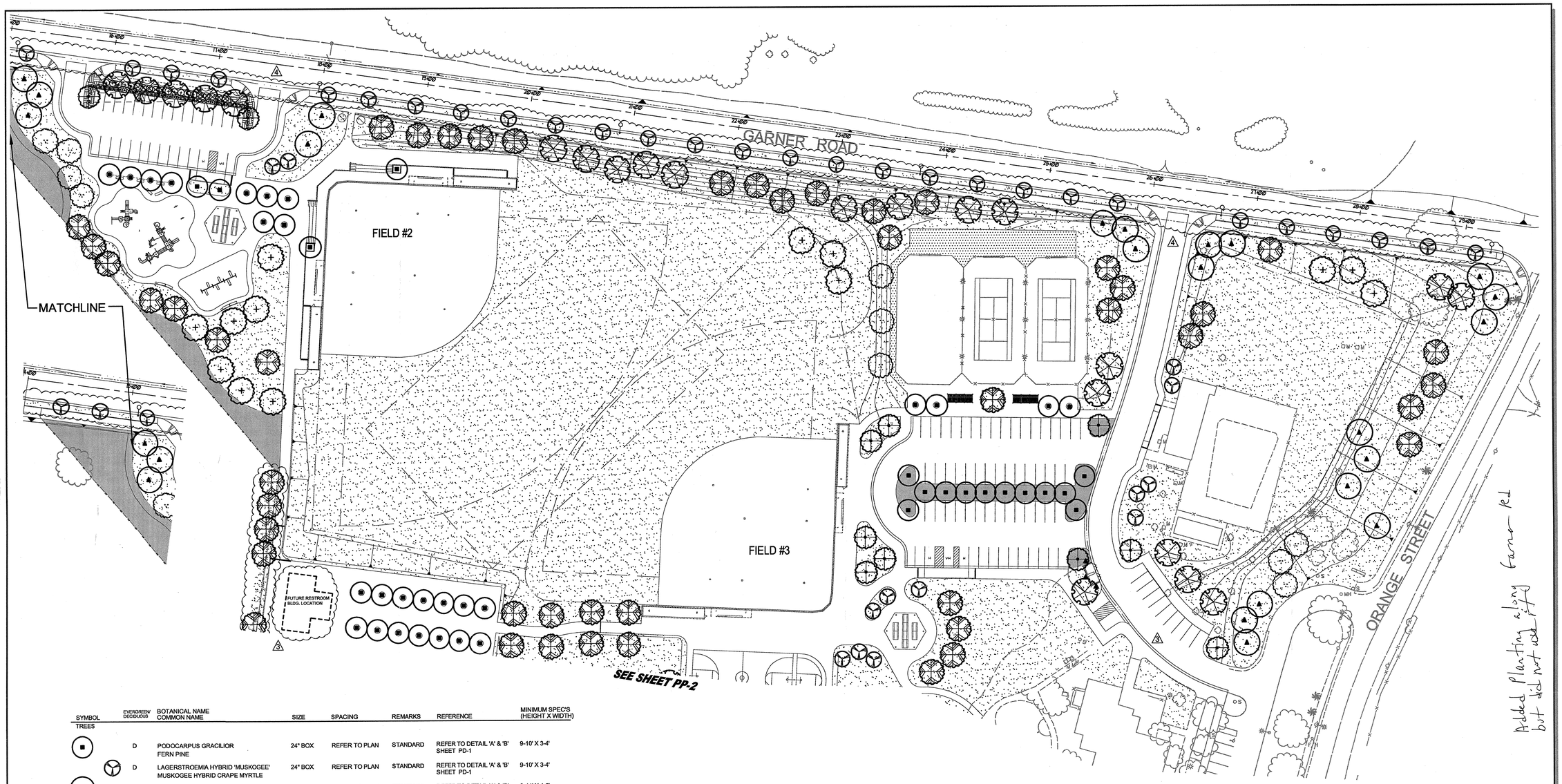

SYMBOL	EVERGREEN DECIDUOUS	BOTANICAL NAME COMMON NAME	SIZE	SPACING	REMARKS	REFERENCE	MINIMUM SPEC'S (HEIGHT X WIDTH)
TREES							
	D	PODOCARPUS GRACILIOR FERN PINE	24" BOX	REFER TO PLAN	STANDARD	REFER TO DETAIL 'A' & 'B' SHEET PD-1	9-10' X 3-4'
	D	LAGERSTROEMIA HYBRID 'MUSKOGEE' MUSKOGEE HYBRID CRAPE MYRTLE	24" BOX	REFER TO PLAN	STANDARD	REFER TO DETAIL 'A' & 'B' SHEET PD-1	9-10' X 3-4'
	E	JACARANDA MIMOSIFOLIA JACARANDA	24" BOX	REFER TO PLAN	STANDARD	REFER TO DETAIL 'A' & 'B' SHEET PD-1	9-11' X 4-5'
	D	KOELREUTERIA BIPINNATA CHINESE FLAME TREE	24" BOX	REFER TO PLAN	STANDARD	REFER TO DETAIL 'A' & 'B' SHEET PD-1	10-12' X 3-4'
	D	FRAXINUS VELUTINA ARIZONA ASH	24" BOX	REFER TO PLAN	STANDARD	REFER TO DETAIL 'A' & 'B' SHEET PD-1	10-12' X 4-5'
	D	CHIONANTHUS RETUSUS CHINESE FRINGE TREE	24" BOX	REFER TO PLAN	STANDARD	REFER TO DETAIL 'A' & 'B' SHEET PD-1	9-11' X 3-4'
	E	QUERCUS RUBRA RED OAK	24" BOX	REFER TO PLAN	STANDARD	REFER TO DETAIL 'A' & 'B' SHEET PD-1	9-11' X 3-4'
	D	SAPIUM SEBIFERUM CHINESE TALLOW TREE	24" BOX	REFER TO PLAN	STANDARD	REFER TO DETAIL 'A' & 'B' SHEET PD-1	9-10' X 3-4'
SHRUBS							
		CISTUS PURPUREUS ORCHID ROCKROSE	5 GAL	REFER TO PLAN	FULL & BUSHY	REFER TO DETAIL 'A' & 'C' SHEET PD-1	
		DIETES VEGETA FORTNIGHT LILY	5 GAL	REFER TO PLAN	FULL & BUSHY	REFER TO DETAIL 'A' & 'C' SHEET PD-1	
		ELEAGNUS PUNGENS SILVERBERRY	5 GAL	REFER TO PLAN	FULL & BUSHY	REFER TO DETAIL 'A' & 'C' SHEET PD-1	
		PITTOSPORUM TOBIRA 'VARIEGATA' VARIEGATED MOCK ORANGE	5 GAL	REFER TO PLAN	FULL & BUSHY	REFER TO DETAIL 'A' & 'C' SHEET PD-1	
VINES							
		PARTHENOCISSUS TRICUSPIDATA BOSTON IVY	1 GAL	REFER TO PLAN	FULL ON STAKE & BUSHY	REFER TO DETAIL 'D' SHEET PD-1	
GROUND COVERS							
		HYDROSEEDED TURF				REFER TO SPECIFICATIONS	
		HYDROSEEDED TURF INSTALL AS PART OF BASE BID. PRICE FOR SOIL PREP., WEED ABATEMENT AND HYDROSEEDING IN THIS AREA SHALL BE DEDUCTED FROM THE PRICE TO CONSTRUCT ADDITIVE ALTERNATE #1 ON SHEET CP-1.				REFER TO SPECIFICATIONS	
		MYOPORUM PARVIFOLIUM 'PINK' PINK MYOPORUM	ROOTED CUTTINGS	12" O.C.		REFER TO SPECIFICATIONS	
		2" DEPTH LAYER OF 'PLANTS CHOICE' COARSE BRUSH MULCH					

NOTES:

1. A 2" DEPTH LAYER OF 'PLANTS CHOICE' COARSE BRUSH MULCH IS TO BE INSTALLED IN ALL GROUNDCOVER AND SHRUB PLANTING AREAS.

RECEIVED
JAN 10 2007
PARK & RECREATION PLANNING & DESIGN

0' 40' 80' 120'

RHA
LANDSCAPE ARCHITECTS PLANNERS, INC.
3612 MISSION INN AVE
RIVERSIDE, CALIFORNIA 92501
LIC. #1512
PH. (951) 781-1930
FAX (951) 686-8091

© R.H.A. Landscape Architects-Planners, Inc. expressly reserve its common law copyright and other property rights in these plans. These plans are not to be reproduced, changed or copied in any form or manner whatsoever, nor are they to be assigned to any third party without first obtaining the express written permission and consent of R.H.A. Landscape Architects-Planners, Inc.

CLIENT:
THE CITY OF RIVERSIDE
PARK AND RECREATION DEPT.
3900 Main Street
Riverside, California 92522

PROJECT:
Reid Park Expansion
Orange St. and Garner Rd.

REVISIONS	DATE	BY
3 CONFORMED SET	9/5/06	MH
4 PARKWAY / WPL	12/11/06	MH

LICENSED LANDSCAPE ARCHITECT
DOUGLAS GROVE NO. 2574
Signature
11/29/07
Renewal Date
Date
STATE OF CALIFORNIA

SHEET TITLE
PLANTING PLAN

DESIGNED	MH
DRAWN	MH
CHECKED	DG
DATE	11-9-05
SCALE	PER PLAN
JOB NO.	03111

SHEET
PP-1
17 OF 19 SHEETS

[One Inch on Original Sheet] Drawing File: N:\Projects\Dgr\03111 Reid Park Expansion\Auto\CAD\RHA Aug\CD\Field Construction Set 08-30-06\03111 PP with add turf.dwg 11-28-06 Dec 15, 2006 - 9:04am

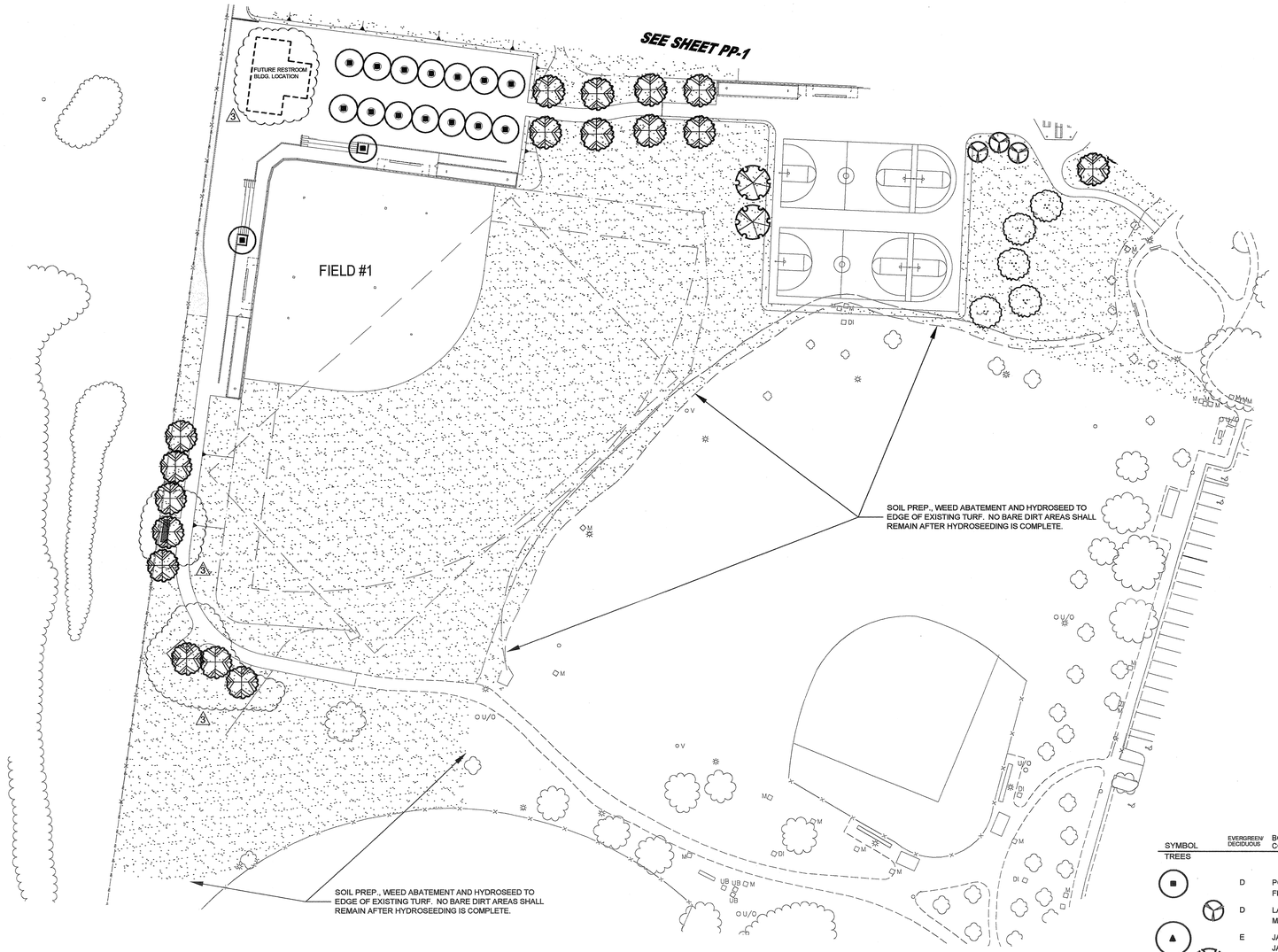

SYMBOL	EVERGREEN/ DECIDUOUS	BOTANICAL NAME COMMON NAME	SIZE	SPACING	REMARKS	REFERENCE	MINIMUM SPEC'S (HEIGHT X WIDTH)
TREES							
	D	PODOCARPUS GRACILIOR FERN PINE	24" BOX	REFER TO PLAN	STANDARD	REFER TO DETAIL 'A' & 'B' SHEET PD-1	9-10' X 3-4'
	D	LAGERSTROEMIA HYBRID 'MUSKOGEE' MUSKOGEE HYBRID CRAPE MYRTLE	24" BOX	REFER TO PLAN	STANDARD	REFER TO DETAIL 'A' & 'B' SHEET PD-1	9-10' X 3-4'
	E	JACARANDA MIMOSIFOLIA JACARANDA	24" BOX	REFER TO PLAN	STANDARD	REFER TO DETAIL 'A' & 'B' SHEET PD-1	9-11' X 4-5'
	D	KOELREUTERIA BIPINNATA CHINESE FLAME TREE	24" BOX	REFER TO PLAN	STANDARD	REFER TO DETAIL 'A' & 'B' SHEET PD-1	10-12' X 3-4'
	D	FRAXINUS VELUTINA ARIZONA ASH	24" BOX	REFER TO PLAN	STANDARD	REFER TO DETAIL 'A' & 'B' SHEET PD-1	10-12' X 4-5'
	D	CHIONANTHUS RETUSUS CHINESE FRINGE TREE	24" BOX	REFER TO PLAN	STANDARD	REFER TO DETAIL 'A' & 'B' SHEET PD-1	9-11' X 3-4'
	E	QUERCUS RUBRA RED OAK	24" BOX	REFER TO PLAN	STANDARD	REFER TO DETAIL 'A' & 'B' SHEET PD-1	9-11' X 3-4'
	D	SAPIUM SEBIFERUM CHINESE TALLOW TREE	24" BOX	REFER TO PLAN	STANDARD	REFER TO DETAIL 'A' & 'B' SHEET PD-1	9-10' X 3-4'
SHRUBS							
		CISTUS PURPUREUS ORCHID ROCKROSE	5 GAL	REFER TO PLAN	FULL & BUSHY	REFER TO DETAIL 'A' & 'C' SHEET PD-1	
		DIETES VEGETA FORTNIGHT LILY	5 GAL	REFER TO PLAN	FULL & BUSHY	REFER TO DETAIL 'A' & 'C' SHEET PD-1	
		ELEAGNUS PUNGENS SILVERBERRY	5 GAL	REFER TO PLAN	FULL & BUSHY	REFER TO DETAIL 'A' & 'C' SHEET PD-1	
		PITTOSPORUM TOBIRA 'VARIEGATA' VARIEGATED MOCK ORANGE	5 GAL	REFER TO PLAN	FULL & BUSHY	REFER TO DETAIL 'A' & 'C' SHEET PD-1	
VINES							
		PARTHENOCISSUS TRICUSPIDATA BOSTON IVY	1 GAL	REFER TO PLAN	FULL ON STAKE & BUSHY	REFER TO DETAIL 'D' SHEET PD-1	
GROUND COVERS							
		HYDROSEEDED TURF				REFER TO SPECIFICATIONS	
		HYDROSEEDED TURF INSTALL AS PART OF BASE BID. PRICE FOR SOIL PREP., WEED ABATEMENT AND HYDROSEEDING IN THIS AREA SHALL BE DEDUCTED FROM THE PRICE TO CONSTRUCT ADDITIVE ALTERNATE #1 ON SHEET CP-1.				REFER TO SPECIFICATIONS	
		MYOPORUM PARVIFOLIUM 'PINK' PINK MYOPORUM	ROOTED CUTTINGS	12" O.C.		REFER TO SPECIFICATIONS	
		2" DEPTH LAYER OF 'PLANTS CHOICE' COARSE BRUSH MULCH					

NOTES:

1. A 2" DEPTH LAYER OF 'PLANTS CHOICE' COARSE BRUSH MULCH IS TO BE INSTALLED IN ALL GROUNDCOVER AND SHRUB PLANTING AREAS.

0' 40' 80' 120'

RHA LANDSCAPE ARCHITECTS PLANNERS, INC.
3612 MISSION INN AVE
RIVERSIDE, CALIFORNIA
92501
LIC. #1512
PH. (951) 781-1930
FAX (951) 686-8091

© R.H.A. Landscape Architects-Planners, Inc. expressly reserves its common law copyright and other property rights in these plans. These plans are not to be reproduced, changed or copied in any form or manner whatsoever, nor are they to be assigned to any third party, without first obtaining the written permission and consent of R.H.A. Landscape Architects-Planners, Inc.

CLIENT:
THE CITY OF RIVERSIDE
PARK AND RECREATION DEPT.
3900 Main Street
Riverside, California 92522

PROJECT:
Reid Park Expansion
Orange St. and Garner Rd.

REVISIONS	DATE	BY
3 CONFORMED SET	9/5/08	MH

LICENSED LANDSCAPE ARCHITECT
THOMAS GROVE, NO. 2499
11/28/07
EXPIRATION DATE
12/31/08
STATE OF CALIFORNIA

SHEET TITLE
PLANTING PLAN

DESIGNED	MH
DRAWN	MH
CHECKED	DG
DATE	11-9-05
SCALE	PER PLAN
JOB NO.	03111

SHEET
PP-2
18 OF 19 SHEETS

[One Inch on Original Sheet] Drawing File: N:\Projects\03jobs\03111 Reid Park Expansion\AutoCAD\RHA dwgs\CD's\Field Construction Set 08-30-08\03111 PP Sep 11, 2008 - 11:07am

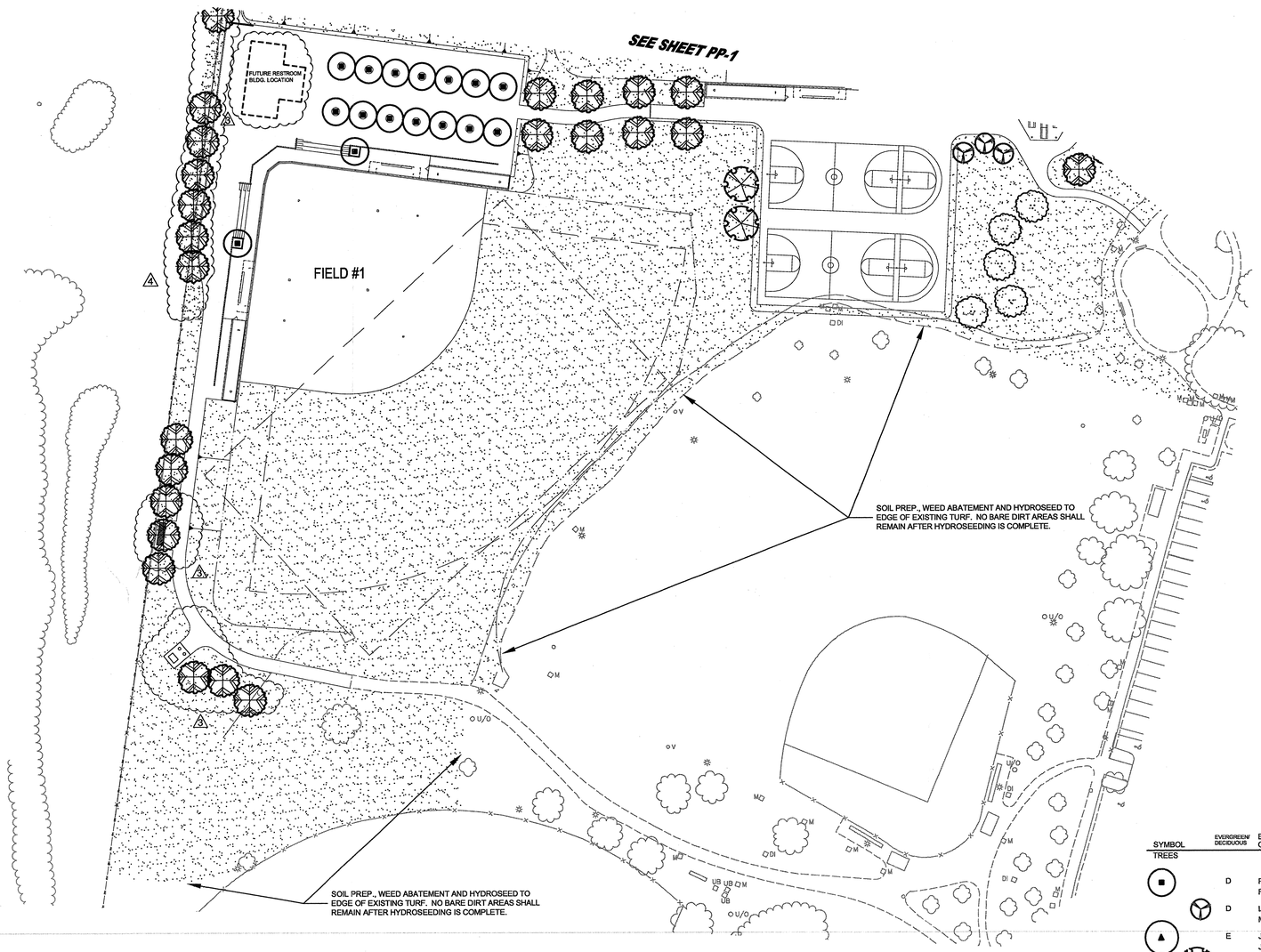

Added trees but did not do it.

SYMBOL	EVERGREEN/ DECIDUOUS	BOTANICAL NAME / COMMON NAME	SIZE	SPACING	REMARKS	REFERENCE	MINIMUM SPEC'S (HEIGHT X WIDTH)
TREES							
	D	PODOCARPUS GRACILIOR FERN PINE	24" BOX	REFER TO PLAN	STANDARD	REFER TO DETAIL 'A' & 'B' SHEET PD-1	9-10' X 3-4'
	D	LAGERSTROEMIA HYBRID 'MUSKOGEE' MUSKOGEE HYBRID CRAPE MYRTLE	24" BOX	REFER TO PLAN	STANDARD	REFER TO DETAIL 'A' & 'B' SHEET PD-1	9-10' X 3-4'
	E	JACARANDA MIMOSIFOLIA JACARANDA	24" BOX	REFER TO PLAN	STANDARD	REFER TO DETAIL 'A' & 'B' SHEET PD-1	9-11' X 4-5'
	D	KOELREUTERIA BIPINNATA CHINESE FLAME TREE	24" BOX	REFER TO PLAN	STANDARD	REFER TO DETAIL 'A' & 'B' SHEET PD-1	10-12' X 3-4'
	D	FRAXINUS VELUTINA ARIZONA ASH	24" BOX	REFER TO PLAN	STANDARD	REFER TO DETAIL 'A' & 'B' SHEET PD-1	10-12' X 4-5'
	D	CHIONANTHUS RETUSUS CHINESE FRINGE TREE	24" BOX	REFER TO PLAN	STANDARD	REFER TO DETAIL 'A' & 'B' SHEET PD-1	9-11' X 3-4'
	E	QUERCUS RUBRA RED OAK	24" BOX	REFER TO PLAN	STANDARD	REFER TO DETAIL 'A' & 'B' SHEET PD-1	9-11' X 3-4'
	D	SAPIUM SEBIFERUM CHINESE TALLOW TREE	24" BOX	REFER TO PLAN	STANDARD	REFER TO DETAIL 'A' & 'B' SHEET PD-1	9-10' X 3-4'
SHRUBS							
		CISTUS PURPUREUS ORCHID ROCKROSE	5 GAL	REFER TO PLAN	FULL & BUSHY	REFER TO DETAIL 'A' & 'C' SHEET PD-1	
		DIETES VEGETA FORTNIGHT LILY	5 GAL	REFER TO PLAN	FULL & BUSHY	REFER TO DETAIL 'A' & 'C' SHEET PD-1	
		ELEAGNUS PUNGENS SILVERBERRY	5 GAL	REFER TO PLAN	FULL & BUSHY	REFER TO DETAIL 'A' & 'C' SHEET PD-1	
		PITTOSPORUM TOBIRA 'VARIEGATA' VARIEGATED MOCK ORANGE	5 GAL	REFER TO PLAN	FULL & BUSHY	REFER TO DETAIL 'A' & 'C' SHEET PD-1	
VINES							
		PARTHENOCISSUS TRICUSPIDATA BOSTON IVY	1 GAL	REFER TO PLAN	FULL ON STAKE & BUSHY	REFER TO DETAIL 'D' SHEET PD-1	
GROUND COVERS							
		HYDROSEEDED TURF				REFER TO SPECIFICATIONS	
		HYDROSEEDED TURF INSTALL AS PART OF BASE BID. PRICE FOR SOIL PREP., WEED ABATEMENT AND HYDROSEEDING IN THIS AREA SHALL BE DEDUCTED FROM THE PRICE TO CONSTRUCT ADDITIVE ALTERNATE #1 ON SHEET CP-1.				REFER TO SPECIFICATIONS	
		MYOPORUM PARVIFOLIUM 'PINK' PINK MYOPORUM	ROOTED CUTTINGS	12" O.C.		REFER TO SPECIFICATIONS	
		2" DEPTH LAYER OF 'PLANTS CHOICE' COARSE BRUSH MULCH					

NOTES:

1. A 2" DEPTH LAYER OF 'PLANTS CHOICE' COARSE BRUSH MULCH IS TO BE INSTALLED IN ALL GROUNDCOVER AND SHRUB PLANTING AREAS.

RECEIVED
JAN 10 2007
PARK & RECREATION PLANNING & DESIGN

0' 40' 80' 120'

© R.H.A. Landscape Architects-Planners, Inc. expressly reserves its common law copyright and other property rights in these plans. These plans are not to be reproduced, changed or copied in any form or manner whatsoever nor are they to be assigned to any third party without first obtaining the express written permission.

RHA
LANDSCAPE ARCHITECTS PLANNERS, INC.
3612 MISSION INN AVE
RIVERSIDE, CALIFORNIA 92501
LIC. #1512
PH. (951) 781-1930
FAX (951) 686-8091

CLIENT:
THE CITY OF RIVERSIDE
PARK AND RECREATION DEPT.
3900 Main Street
Riverside, California 92522

PROJECT:
Reid Park Expansion
Orange St. and Garner Rd.

REVISIONS	DATE	BY
2 CONFORMED SET	9/5/06	MH
4 PARKWAY / WPL	12/11/06	MH

LICENSED LANDSCAPE ARCHITECT
CARLOS GROVE, NO. 2798
Signature
11/29/06
Renewal Date
Date
STATE OF CALIFORNIA

SHEET TITLE
PLANTING PLAN

DESIGNED	MH
DRAWN	MH
CHECKED	DG
DATE	11-9-05
SCALE	PER PLAN
JOB NO.	03111

SHEET
PP-2
18 OF 19 SHEETS

[One Inch on Original Sheet] Drawing File: N:\Projects\03pr\03111 Reid Park Expansion\Auto\CAD\RHA dwgs\CD's\Field Construction Set 08-30-06\03111 PP with add turf.pltg 11:28:06 Dec 15, 2006 - 8:08am

H NOT IN USE

E NOT IN USE

C GROUNDCOVER

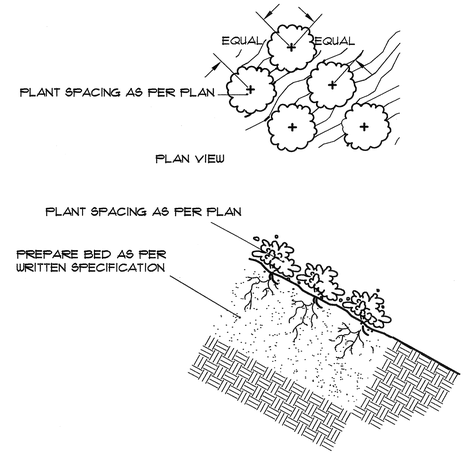

I NOT IN USE

F DEEPROOT BARRIER

Linear Style Planting with DeepRoot Barriers

Determine the correct number of panels to be used. Depending upon the actual planting plan and the number of trees involved the length of linear barrier will vary, but as a general rule of thumb take the anticipated mature canopy diameter of the tree and add 2 feet (61cm). This will be the number of feet necessary for a Linear style planting application. (See chart below.)

A. Choose the barrier that best suits the application. Generally if a sidewalk, patio or driveway is to be protected, 18" (46cm) (LB 18-2) is sufficient depth with 12" (30cm) (LB 12-2) as an alternate choice for non-aggressive, deeper rooting trees. However for curb and gutter protection or more agressive roots 24" (61cm) (UB 24-2) is generally the better choice.

B. Dig the trench to the depth based upon the particular barrier chosen.

C. Install the barrier. When using DeepRoot Linear Barriers simply pull the appropriate number of panels out of the box (they come preassembled) and separate the joiner at the correct length. When installing DeepRoot Universal Barriers in a linear fashion you will need to join the appropriate number of panels together.

D. Next place the barrier in the trench with the vertical ribs facing toward the tree and align in a straight fashion. It is helpful to place the barrier against the hardscape. Use the hardscape as a guide and backfill against the barriers to promote a clean smooth fit to the hardscape. Be sure to keep the barrier's double top edge at least 1/2" (13mm) above grade to ensure roots do not grow over the top.

E. Plant the tree(s). The Linear style offers a more expansive rooting growth area, however adverse soil and drainage conditions may exist in the actual planting area. Take steps to ensure healthy growth of the tree at planting. Consult with a local Arborist for planting tips and recommendations.

F. If the tree(s) will be subject to maintenance work such as lawn mowing or weed trimming we strongly recommend the installation of ArborGard+ Tree Trunk Protectors which is placed around the base of young trees to protect them from damage by weed trimmers, lawn mowers and small rodents.

For additional information please consult the 16 page DeepRoot Product Selection and Installation Guidelines.

For information regarding distributors please call: 1 800 ILV ROOT (458.7668). For help with difficult drainage or other difficult installation questions please call DeepRoot Technical Support at: 1 800 ROOT TEK (766.8835).

For a simple formula to determine the quantity of panels required for a Linear application use:
Estimated Diameter of the Tree Canopy at Maturity + 2' (61cm) = Length of Barrier per Side.

As little as one side of the tree may need barrier for root direction as there may be no hardscape elsewhere requiring protection.

Note: Linear Barriers (LB 12-2 and LB 18-2) are packaged in 2' (61cm) long panels with pre-attached flexible joiners ready to pull out of the carton and install in one continuous line of up to:

LB 12-2	80' (24 m) per Carton
LB 18-2	52' (16 m) per Carton

Line can be separated at any two foot interval.

For One Side of Tree Expected Tree Canopy at Maturity		Number of Feet of Linear Barrier (LB 12 or LB 18)	Optional Universal Barrier (UB) in number of Panels
12' (3.6m)	Diameter +2' (61cm) =	14' (4.2m)	7 Panels
18' (5.5m)	Diameter +2' (61cm) =	20' (6.1m)	10 Panels
24' (7.3m)	Diameter +2' (61cm) =	26' (7.9m)	13 Panels

DeepRoot LB 12-2, LB 18-2 or UB 24-2

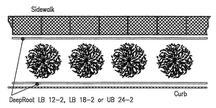

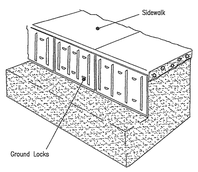

TO BE 24" DEEP ON ALL SIDES

J NOT IN USE

G NOT IN USE

D VINE INSTALLATION NEAR FOOTING

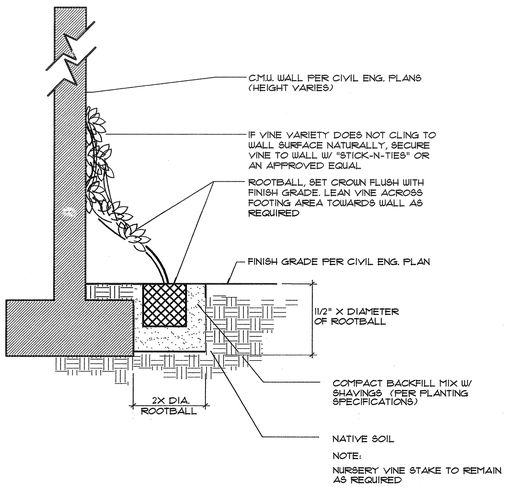

A TREE AND SHRUB PLANTING

GENERAL PLANTING NOTES

1) Contact the Park Projects Inspector at 951-62594 two working days (48 hours) prior to installing any plant material.
2) Trees planted in turf areas shall be maintained with a minimum 12" radius around the tree free of turf throughout the maintenance period.
3) Watering basins may be removed after the maintenance period.
4) For staking information as applicable, refer to Standard Detail 1002.
5) For guying information as applicable, refer to Standard Detail 1003.
6) For specification information, refer to City of Riverside Park and Recreation Department Standard Specifications, Section 02480 Planting.
7) Provide Fertilizer Tablets as follows:

1 gallon plant	2 tablets
5 gallon plant	3 tablets
15 gallon plant	9 tablets
24" box plant	15 tablets

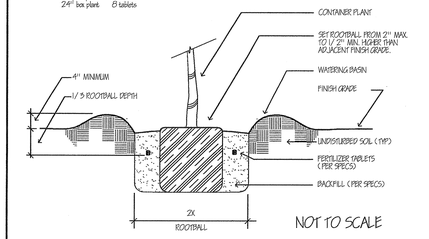

NOT TO SCALE

Approved	Date
BJ	08/28/09
Revised	Date

Park and Recreation Department
CITY OF RIVERSIDE
PLANTING DETAIL

Detail No. 1001

B TREE STAKING

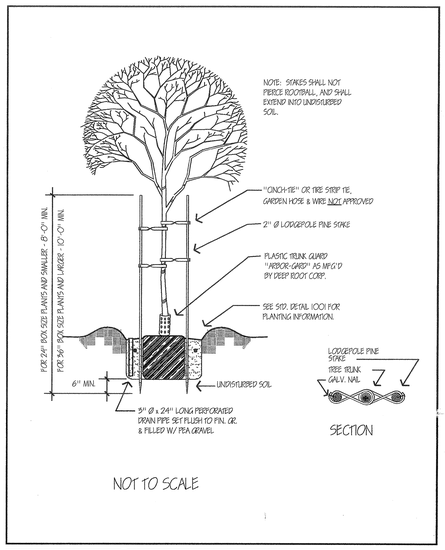

NOT TO SCALE

Approved	Date
BJ	08/28/09
Revised	Date

Park and Recreation Department
CITY OF RIVERSIDE
DOUBLE STAKING DETAIL

Detail No. 1002

RHA LANDSCAPE ARCHITECTS PLANNERS, INC.
3612 MISSION INN AVE
RIVERSIDE, CALIFORNIA
92501
LIC. #1512
PH. (951) 781-1930
FAX (951) 686-8091

© R.H.A. Landscape Architects-Planners, Inc. expressly reserves its common law copyright and other property rights in these plans. These plans are not to be reproduced, changed or copied in any form or manner whatsoever, nor are they to be assigned to any third party without first obtaining the express written permission.

CLIENT:
THE CITY OF RIVERSIDE
PARK AND RECREATION DEPT.
3900 Main Street
Riverside, California 92522

PROJECT:
Reid Park Expansion
Orange St. and Garner Rd.

REVISIONS	DATE	BY

LICENSED LANDSCAPE ARCHITECT
MICHAEL HAYES GROVE
No. 3015
SIGNATURE
11/04/09
EXPIRATION DATE
STATE OF CALIFORNIA

SHEET TITLE
PLANTING DETAILS

DESIGNED	MH
DRAWN	MH
CHECKED	DG
DATE	11-9-05
SCALE	PER PLAN
JOB NO.	03111

SHEET
PD-1
19 OF 19 SHEETS

[One Inch on Original Sheet] Drawing File: N:\Projects\03\p\03111 Reid Park Expansion\AutoCAD\RHA dwgs\CD\Field Construction Set (08-30-09) 03111 PD Sep 12, 2009 - 9:44am

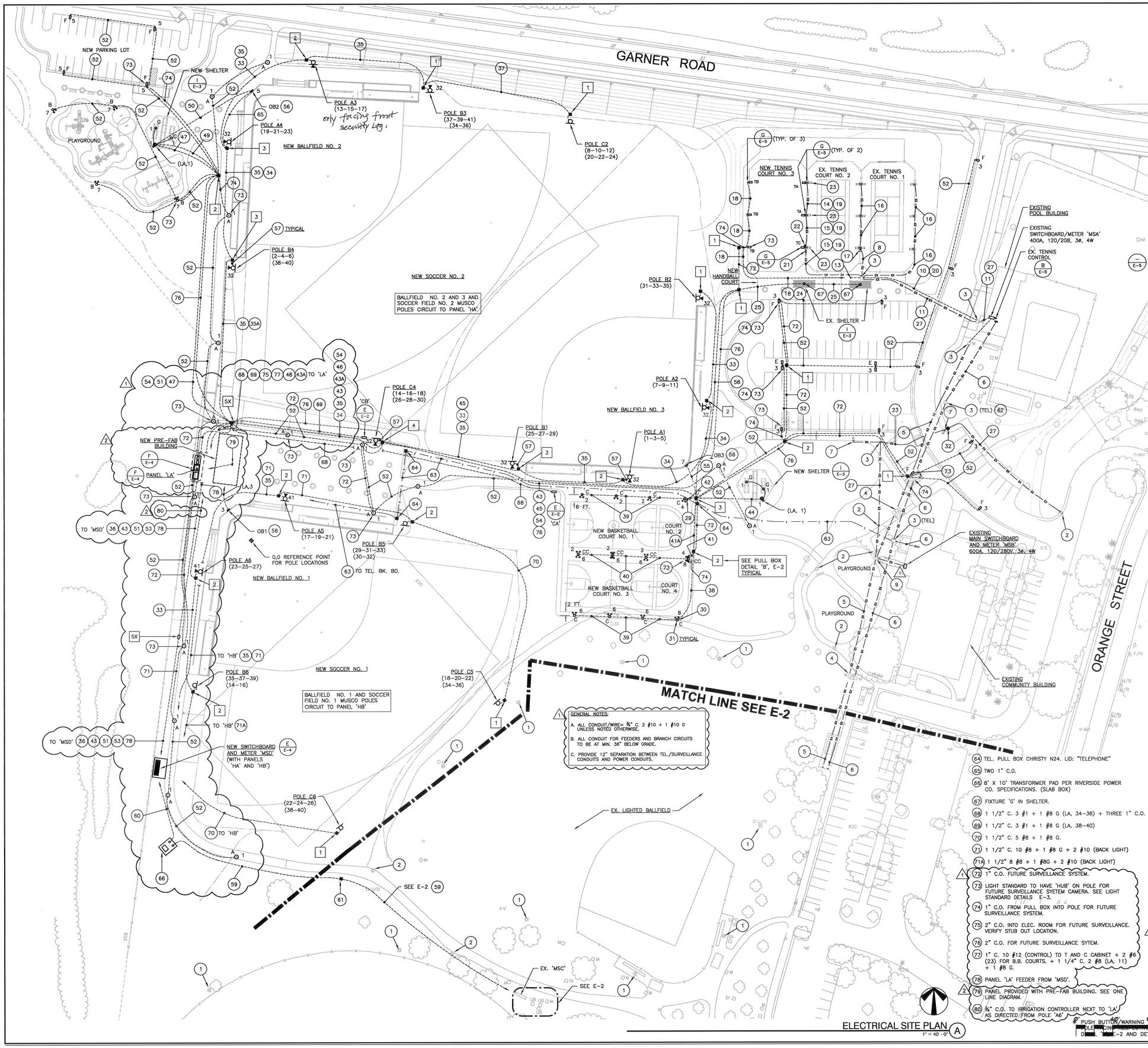

ELECTRICAL SITE PLAN (A)
1" = 40' - 0"

GENERAL NOTES:

A. ALL CONDUIT/WIRE= ¾" C. 2 #10 + 1 #10 G UNLESS NOTED OTHERWISE.

B. ALL CONDUIT FOR FEEDERS AND BRANCH CIRCUITS TO BE AT MIN. 36" BELOW GRADE.

C. PROVIDE 12" SEPARATION BETWEEN TEL./SURVEILLANCE CONDUITS AND POWER CONDUITS.

PLAN NOTES:

1. EXISTING BALLFIELD LIGHT STANDARD TO REMAIN. SEE E-2.
2. EXISTING WALKWAY LIGHT STANDARD TO REMAIN.
3. EX. PULL BOX.
4. EX. PULL BOXES.
5. EX. 4" C. POWER CO. CONDUIT/WIRE (PRIMARY)
6. EX. 2" C. (TEL.) CONDUIT WIRE. COORDINATE WITH CITY FOR CITY TO PROVIDE TEL. WIRE.
7. REMOVE EX. LIGHT STANDARD AND FOUNDATION. DISCONNECT EX. CIRCUIT. CAP OFF CONDUIT.
8. EX. 1 1/2" C. 6 #8, 2 #10 SECURITY, 6 #12 CONTROL + 1 #8G (EX. TENNIS COURTS CIRCUITS)
9. EX. POWER CO. TRANSFORMER PAD.
10. EX. 1 1/2" C.O.
11. EX. 2" C. 9 #8, 2 #10, 9 #12 + 1 #8G.
12. EX. 1 1/2" C. 6 #8, 2 #10, (SECURITY LIGHT), 6 #12 CONTROL + 1 #8G.
13. EX. 1" C.O. STUB OUT.
14. EX. 1" C. 2 #8 + 1 #8G.
15. EX. 1 1/2" C. 3 #8 + 1 #8G, + PULL WIRE.
16. EX. CONDUIT/WIRE TO REMAIN.
17. EX. SECURITY LIGHT.
18. NEW 1" C. 2 #8 + 1 #10G (208V)
19. RE-USE EXISTING CONDUIT, PULL THRU 5 #8 + G.
20. NEW 2 #8 + G (TENNIS LIGHTING) + 5 #12 (CONTROL TO T AND C CABINET) AND CONNECT PER SHT, E-5 TO NEW 40A/2P C.B. AT 'MS' AND CONTROL WIRE TO T AND C SYSTEM.
21. NEW SECURITY LIGHT PER DETAIL 'H', E-5.
22. PUSH BUTTON LIGHT CONTROL-TENNIS COURT NO.3 PER DETAIL 'A', E-3.
23. EXISTING POLE AND LIGHT FIXTURE TO BE REMOVED AND REPLACED WITH NEW MATCHING EXISTING.
24. PICK UP EXISTING STUB OUT PER NOTE 13.
25. 3/4" C. 2 #10 + 1 #10 G (LA, 23)
26. REMOVE EX. LIGHT STANDARD. SAME AS NOTE 7. INTERCEPT EX. CONDUIT/WIRE TO KEEP EXISTING CIRCUIT IN SERVICE.
27. EX. CIRCUIT TO REMAIN IN SERVICE.
28. EX. PULL BOX TO REMAIN.
29. PUSH BUTTON/WARNING LIGHT-COURT NO. 1AND 2.
30. PUSH BUTTON/WARNING LIGHT-COURT NO. 3 AND 4.
31. AIM FIXTURES AS RECOMENDED BY FIXTURE MF'G.
32. INTERCEPT EXISTING CIRCUIT WITH PULL BOX (N9)
33. 1 1/2" C. 3 #8 + 1 #8G + 1 1/2" C.O. + 2 #10 (BACKLIGHT)
34. 1 1/2" C. 6 #8 + 1 #8G + 2 #8 (BACKLIGHT) + 1 1/2" C.O.
35. 1 1/2" C. 11 #8 + 1 #8G + 2 #10 (BACKLIGHT) + 1 1/2" C.O.
35A. 1 1/2" C. 11 #8 + 1 #8 G.
36. 2" C. 11 #6 (8-10-12, 20-22-24, 37-39-41), 34-36 + 1 #8G.
    2" C. 11 #6 (13-15-17, 19-21-23, 2-4-6), 38-40 + 1 #8G
    2" C. 9 #6 (31-33-35, 1-3-5, 25-27-29) + 1 #8G.
    2" C. 6 #6 (14-16-18, 26-28-30) + 2 #10 (32)
    ALL ABOVE TO PANEL 'HA'.
37. 1 ½" C. 3 #8 + 1 #8 G.
38. 1 1/4" C. 2 #6 (HB,4), 2 #10 (HB,8) + 1 #8G
    1" C. 5 #12 (CONTROL)
39. 1" C. 2 #6 + 1 #8G.
40. 1 1/4" C. 4 #6 (HB,2-6) + 1 #8G.
41. 1 1/2" C. 6 #6 (HB,2-4-6-8) + 1 #8G
    1 1/2" C. 5 #12 (CONTROL)
41A. 1 1/2" C. 6 #6 (HB,2-4-6-8) + 1 #8G
    1" C. 10 #12 (CONTROL)
42. 1 1/4" C. 4 #6 (HB,2-4) + 1 #8G.
    1" C. 5 #12 (CONTROL)
43. 1 1/2" C. 6 #6 (HB,2-4-6-8) + 1 #8G.
43A. 1 1/2" C. 15 #12 (CONTROL) TO T AND C CABINET IN ELEC. ROOM FOR B.B. COURTS.
44. ¾" C. 2 #10 + G (LA, 1)
45. 1 1/2" C. 2 #10 (HB,1), 2 #8 + 1 #8G (HB,3), 4 #10 G. (LA,1-7) + 2 #6 (LA, 23) + 1 #8 G (120V)
46. 1" C. 4 #10 (LA,1-7) + 2 #6 (LA, 23) + 1 #8 G.
47. 1" C. 4 #8 + G (LA,1-5)
48. 1 1/2" C. 5 #10 (LA,1-5-7) + 1 #10G.
49. 3/4" C. 2 #10 + G (HB,9)
50. 3/4" C. 2 #10 + G (LA,5)
51. 1 1/2" C. 6 #6 + G (HB,1-5-7-9)
52. 3/4" C. 2 #8 + G.
53. 3-2" C.O. (SPARE) TO 'MSD' (NEAR PANEL 'HB')
54. TWO 1 1/2" C.O. (SPARE)
55. 1" C. 2 #10 (LA,7) + TWO 3/4" C.O.
56. SEE DETAIL 'C', E-2.
57. 1 1/2" C. 3 #6 + G (TO BALLAST) + 2 #10 (32) TO BACK LIGHT.
58. 3/4" C. 2 #8 + 1 #10 G (LA, 23)
59. 2-4" C.O. + 1-2" C.O.
60. 3-5" C.O. TO 'MSD' FROM UTILITY TRANSFORMER.
61. PULL BOX PER UTILITY CO. REQUIREMENTS.
62. NEW TEL. CONDUITS PER NOTE 63 TO ENTER EX. TEL. PULL BOX. VERIFY EXACT LOCATION.
63. TWO 2" C.O. (TEL.)
64. TEL. PULL BOX CHRISTY N24. LID: "TELEPHONE"
65. TWO 1" C.O.
66. 8' X 10' TRANSFORMER PAD PER RIVERSIDE POWER CO. SPECIFICATIONS. (SLAB BOX)
67. FIXTURE 'G' IN SHELTER.
68. 1 1/2" C. 3 #1 + 1 #8 G (LA, 34-36) + THREE 1" C.O.
69. 1 1/2" C. 3 #1 + 1 #8 G (LA, 38-40)
70. 1 1/2" C. 5 #8 + 1 #8 G.
71. 1 1/2" C. 10 #8 + 1 #8 G + 2 #10 (BACK LIGHT)
71A. 1 1/2" 8 #8 + 1 #8G + 2 #10 (BACK LIGHT)
72. 1" C.O. FUTURE SURVEILLANCE SYSTEM.
73. LIGHT STANDARD TO HAVE 'HUB' ON POLE FOR FUTURE SURVEILLANCE SYETEM CAMERA. SEE LIGHT STANDARD DETAILS E-3.
74. 1" C.O. FROM PULL BOX INTO POLE FOR FUTURE SURVEILLANCE SYSTEM.
75. 2" C.O. INTO ELEC. ROOM FOR FUTURE SURVEILLANCE. VERIFY STUB OUT LOCATION.
76. 2" C.O. FOR FUTURE SURVEILLANCE SYTEM.
77. 1" C. 10 #12 (CONTROL) TO T AND C CABINET + 2 #6 (23) FOR B.B. COURTS. + 1 1/4" C. 2 #8 (LA, 11) + 1 #8 G.
78. PANEL 'LA' FEEDER FROM 'MSD'.
79. PANEL PROVIDED WITH PRE-FAB BUILDING. SEE ONE LINE DIAGRAM.
80. ¾" C.O. TO IRRIGATION CONTROLLER NEXT TO 'LA' AS DIRECTED FROM POLE 'A6'.

* PUSH BUTTON/WARNING LIGHT TO BE [redacted] POLE [redacted] COURT. SEE D[redacted] E-2 AND DET[redacted]

RHA LANDSCAPE ARCHITECTS PLANNERS, INC.
3612 MISSION INN AVE
RIVERSIDE, CALIFORNIA 92501
LIC. #1512
PH. (909) 781-1930
FAX (909) 686-8091

© R.H. Landscape Architects - Planners, Inc. reserves its exclusive rights to these plans, designs or any other property rights in these plans. Reproduction or use of these plans without the express written permission of R.H. Landscape Architects - Planners, Inc. is prohibited. These plans are not to be reproduced, changed or copied in any form or manner whatsoever, nor are they to be assigned to any third party without first obtaining the express written permission of R.H. Landscape Architects - Planners, Inc.

CLIENT:
THE CITY OF RIVERSIDE
PARK AND RECREATION DEPT.
3900 Main Street
Riverside, California 92522

PROJECT:
Reid Park Expansion
Community Park
Orange St. and Garner Rd.

REVISIONS	DATE	BY
1 MISC.	1/26/06	RR
2 MISC.	7/18/06	RR

REGISTERED PROFESSIONAL ENGINEER
THOMAS E. HARTMAN
No. 7531
Exp: 9/30/06
ELECTRICAL
STATE OF CALIFORNIA

SHEET TITLE
ELECTRICAL SITE PLAN

DESIGNED	MR
DRAWN	MR
CHECKED	RR
DATE	01-17-06
SCALE	1" = 40'-0"
JOB NO.	

SHEET
E-1
OF 6 SHEETS

REEDCORP ENGINEERING
CONSULTING ELECTRICAL ENGINEERS
2061 Business Center Drive, Suite 110
Irvine, CA 92612
(949) 752-1278 FAX: (949) 752-1287
E-MAIL : ee@reedcorp.net

04-216-1944

[One Inch on Original Sheet] Drawing File: N:\Projects\03pr\03211 Reid Park Expansion\AutoCAD\Elec Dwgs\Autocad\Drawings from Reedcorp on 8-8-06\E-1 Electrical Site Plan - S E Electrical Site Plan Aug 10, 2006 2:44pm

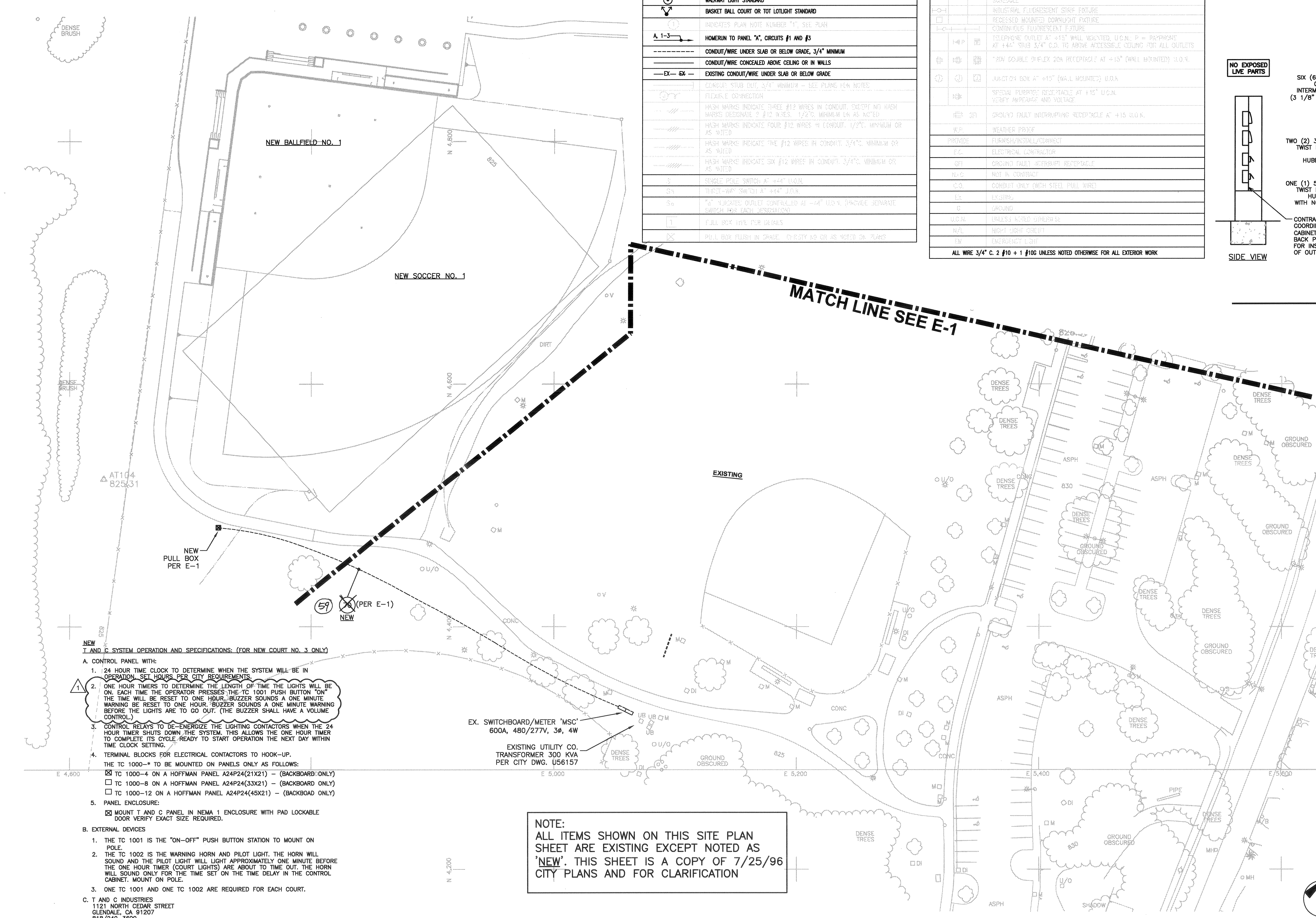

ELECTRICAL SYMBOLS LIST

SYMBOL	DESCRIPTION
A2	NEW BALLFIED LIGHTING POLE (▶ = BACK AREA LIGHT)
	PARKING LOT OR TENNIS COURT LIGHT STANDARD
	WALKWAY LIGHT STANDARD
	BASKET BALL COURT OR TOT LOTLIGHT STANDARD
(1)	INDICATES PLAN NOTE NUMBER "1", SEE PLAN
A, 1-3	HOMERUN TO PANEL "A", CIRCUITS #1 AND #3
---------	CONDUIT/WIRE UNDER SLAB OR BELOW GRADE, 3/4" MINIMUM
————	CONDUIT/WIRE CONCEALED ABOVE CEILING OR IN WALLS
—EX— EX —	EXISTING CONDUIT/WIRE UNDER SLAB OR BELOW GRADE
	CONDUIT STUB OUT, 3/4" MINIMUM – SEE PLANS FOR NOTES
	FLEXIBLE CONNECTION
	HASH MARKS INDICATE THREE #12 WIRES IN CONDUIT, EXCEPT NO HASH MARKS DESIGNATE 2 #12 WIRES. 1/2"C. MINIMUM UN AS NOTED
	HASH MARKS INDICATE FOUR #12 WIRES IN CONDUIT, 1/2"C. MINIMUM OR AS NOTED
	HASH MARKS INDICATE FIVE #12 WIRES IN CONDUIT, 3/4"C. MINIMUM OR AS NOTED
	HASH MARKS INDICATE SIX #12 WIRES IN CONDUIT, 3/4"C. MINIMUM OR AS NOTED
S	SINGLE POLE SWITCH AT +44" U.O.N.
S3	THREE-WAY SWITCH AT +44" U.O.N.
Sa	"a" INDICATES OUTLET CONTROLLED AT +44" U.O.N. (PROVIDE SEPARATE SWITCH FOR EACH DESIGNATION)
1	PULL BOX TYPE FOR DETAILS
	PULL BOX FLUSH IN GRADE. CHRISTY N9 OR AS NOTED ON PLANS

CLG.	WALL	FLR.	DESCRIPTION
			INCANDESCENT FIXTURE OUTLET – VERIFY MOUNTING WITH FIXTURE SCHEDULE
			SURFACE FLUORESCENT FIXTURE OUTLET – VERIFY MOUNTING WITH FIXTURE SCHEDULE
			LAY-IN FLUORESCENT FIXTURE – VERIFY MOUNTING WITH FIXTURE SCHEDULE
			INDUSTRIAL FLUORESCENT STRIP FIXTURE
			RECESSED MOUNTED DOWNLIGHT FIXTURE
			CONTINUOUS FLUORESCENT FIXTURE
	P		TELEPHONE OUTLET AT +15" WALL MOUNTED, U.O.N., P = PAYPHONE AT +44" STUB 3/4" C.O. TO ABOVE ACCESSIBLE CEILING FOR ALL OUTLETS
			120V DOUBLE DUPLEX 20A RECEPTACLE AT +15" (WALL MOUNTED) U.O.N.
			JUNCTION BOX AT +15" (WALL MOUNTED) U.O.N.
			SPECIAL PURPOSE RECEPTACLE AT +15" U.O.N. VERIFY AMPERAGE AND VOLTAGE
	GFI		GROUND FAULT INTERRUPTING RECEPTACLE AT +15 U.O.N.
W.P.			WEATHER PROOF
PROVIDE			FURNISH/INSTALL/CONNECT
E.C.			ELECTRICAL CONTRACTOR
GFI			GROUND FAULT INTERRUPT RECEPTACLE
N.I.C			NOT IN CONTRACT
C.O.			CONDUIT ONLY (WITH STEEL PULL WIRE)
EX			EXISTING
G			GROUND
U.O.N.			UNLESS NOTED OTHERWISE
N/L			NIGHT LIGHT CIRCUIT
EM			EMERGENCY LIGHT

ALL WIRE 3/4" C. 2 #10 + 1 #10G UNLESS NOTED OTHERWISE FOR ALL EXTERIOR WORK

NO EXPOSED LIVE PARTS

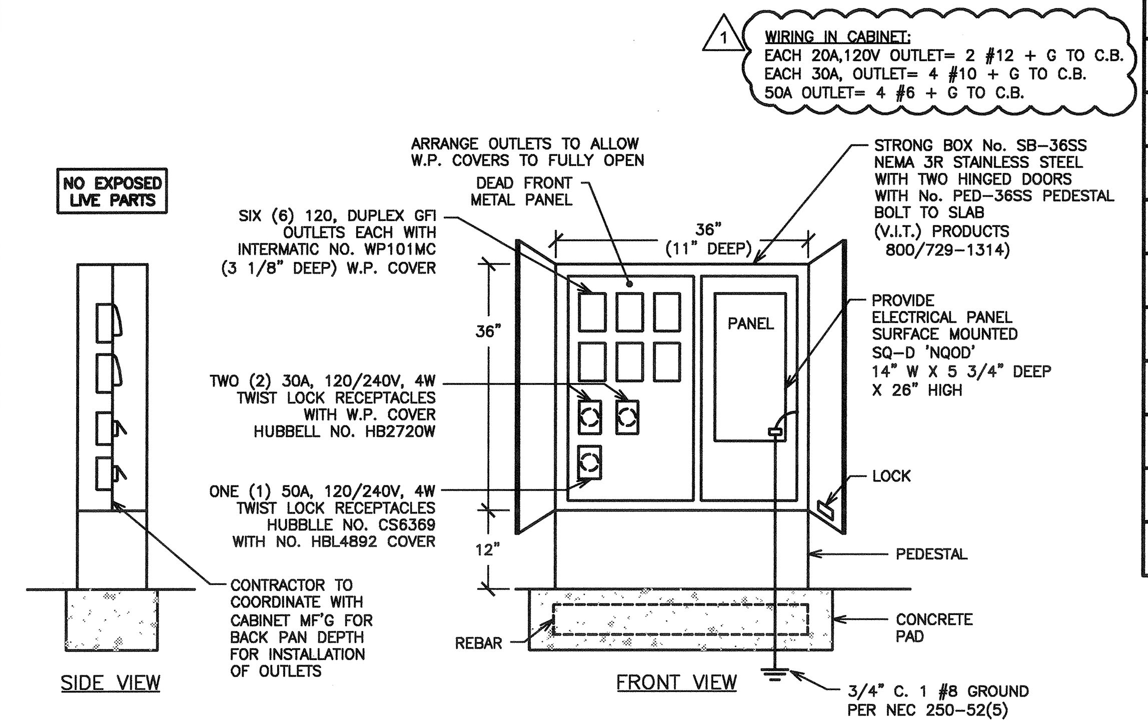

OUTLET CABINETS 'CA', 'CB' (E)
N.T.S.

FIXTURE SCHEDULE	
TYPE	DESCRIPTION
A	SEE DETAIL 'B', E-3
B	SEE DETAIL 'C', E-3
C	SEE DETAIL 'D', E-3
CC	SEE DETAIL 'D', E-3
D	(NOT USED)
E	SEE DETAIL 'F', E-3
F	SEE DETAIL 'H', E-3
G	SEE DETAIL 'I', E-3
TA,TB, TC	SEE DETAIL 'C', E-5
H	SEE DETAIL 'C', E-4
K,L,M	SEE SHEET E-6
MUSCO POLES	SEE DETAIL 'D', E-4

PANEL: 'CA' ('CB')
DATE: 12/13/05 TIME: 12:34:44
JOB: 1944
PANEL VOLTAGE: 240/120 1ϕ 3 W
BUS: 100A
MAINS: 100A/2P
AIC RATING: 10,000
CIRCUIT CODE: blank or N : NON-CONTINUOUS
L : LONG-CONTINUOUS
R : DEMANDABLE RECEPTACLES
K : KITCHEN NO. OF EQUIPMENT: 0
MOUNTING:

CKT NO	CODE	TRIP	POLE	DESCRIPTION	(NOTE)	M	R	L	ϕA	ϕB	A B	ϕA	ϕB	L	R	M	(NOTE) DESCRIPTION	TRIP	POLE	CODE	CKT NO
1		20	1	OUTLET					500			2000					30A OUTLET	30			2
3		20	1	OUTLET						500			2000				–		2		4
5		20	1	OUTLET					500			2000					30A OUTLET	30			6
7		20	1	OUTLET						500			2000				–		2		8
9		20	1	OUTLET					500			3500					50A OUTLET	50			10
11		20	1	OUTLET						500			3500				–		2		12
13		20	1	OUTLET					500								SPARE				14
15				SPACE													SPARE				16
17				SPACE													SPARE				18
19				SPACE													SPARE				20

PANEL NOTES: PHASE TOTALS ϕA: 9500 ϕB: 9500

TOTAL CONNECTED VA	19000
CONNECTED VA (CODE N)	
CONNECTED VA (CODE L)	
CONNECTED VA (CODE R)	
CONNECTED VA (CODE K)	
PANEL CONNECTED KVA	
PANEL DEMAND KVA	
PANEL DEMAND AMPS	
HIGH ϕ AMPS W/LCL	79

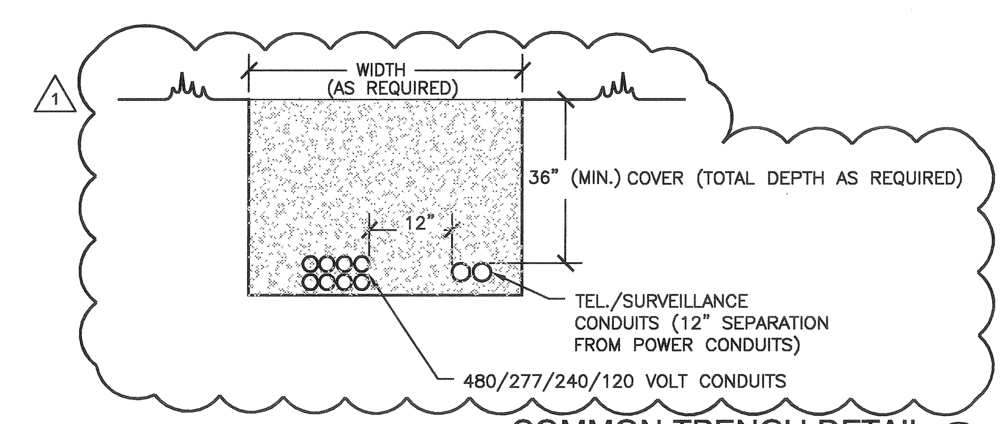

COMMON TRENCH DETAIL (E)
N.T.S.

NEW
T AND C SYSTEM OPERATION AND SPECIFICATIONS: (FOR NEW COURT NO. 3 ONLY)

A. CONTROL PANEL WITH:

1. 24 HOUR TIME CLOCK TO DETERMINE WHEN THE SYSTEM WILL BE IN OPERATION. SET HOURS PER CITY REQUIREMENTS.
2. ONE HOUR TIMERS TO DETERMINE THE LENGTH OF TIME THE LIGHTS WILL BE ON. EACH TIME THE OPERATOR PRESSES THE TC 1001 PUSH BUTTON "ON" THE TIME WILL BE RESET TO ONE HOUR. BUZZER SOUNDS A ONE MINUTE WARNING BE RESET TO ONE HOUR. BUZZER SOUNDS A ONE MINUTE WARNING BEFORE THE LIGHTS ARE TO GO OUT. (THE BUZZER SHALL HAVE A VOLUME CONTROL.)
3. CONTROL RELAYS TO DE-ENERGIZE THE LIGHTING CONTACTORS WHEN THE 24 HOUR TIMER SHUTS DOWN THE SYSTEM. THIS ALLOWS THE ONE HOUR TIMER TO COMPLETE ITS CYCLE READY TO START OPERATION THE NEXT DAY WITHIN TIME CLOCK SETTING.
4. TERMINAL BLOCKS FOR ELECTRICAL CONTACTORS TO HOOK-UP.
   THE TC 1000-* TO BE MOUNTED ON PANELS ONLY AS FOLLOWS:
   ☒ TC 1000-4 ON A HOFFMAN PANEL A24P24(21X21) – (BACKBOARD ONLY)
   ☐ TC 1000-8 ON A HOFFMAN PANEL A24P24(33X21) – (BACKBOARD ONLY)
   ☐ TC 1000-12 ON A HOFFMAN PANEL A24P24(45X21) – (BACKBOAD ONLY)
5. PANEL ENCLOSURE:
   ☒ MOUNT T AND C PANEL IN NEMA 1 ENCLOSURE WITH PAD LOCKABLE DOOR VERIFY EXACT SIZE REQUIRED.

B. EXTERNAL DEVICES

1. THE TC 1001 IS THE "ON-OFF" PUSH BUTTON STATION TO MOUNT ON POLE.
2. THE TC 1002 IS THE WARNING HORN AND PILOT LIGHT. THE HORN WILL SOUND AND THE PILOT LIGHT WILL LIGHT APPROXIMATELY ONE MINUTE BEFORE THE ONE HOUR TIMER (COURT LIGHTS) ARE ABOUT TO TIME OUT. THE HORN WILL SOUND ONLY FOR THE TIME SET ON THE TIME DELAY IN THE CONTROL CABINET. MOUNT ON POLE.
3. ONE TC 1001 AND ONE TC 1002 ARE REQUIRED FOR EACH COURT.

C. T AND C INDUSTRIES
1121 NORTH CEDAR STREET
GLENDALE, CA 91207
818/240-3600
FAX: 818/547-9359

NOTE:
ALL ITEMS SHOWN ON THIS SITE PLAN SHEET ARE EXISTING EXCEPT NOTED AS '<u>NEW</u>'. THIS SHEET IS A COPY OF 7/25/96 CITY PLANS AND FOR CLARIFICATION

EXISTING ELECTRICAL SITE PLAN (A)
1" = 40' - 0"

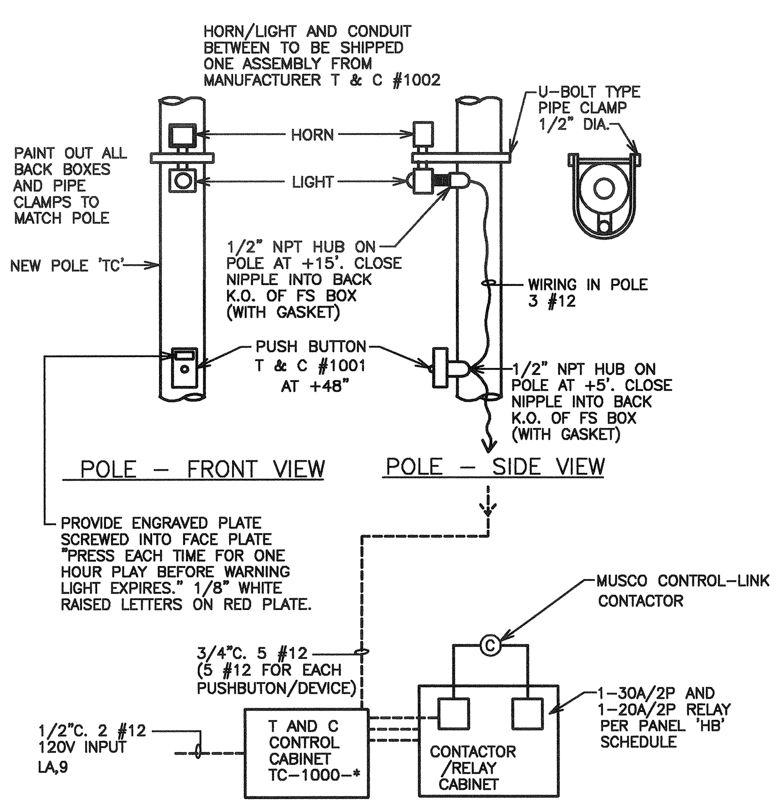

NEW 'T AND C' CONTROL BASKET BALL COURTS (D)
N.T.S.

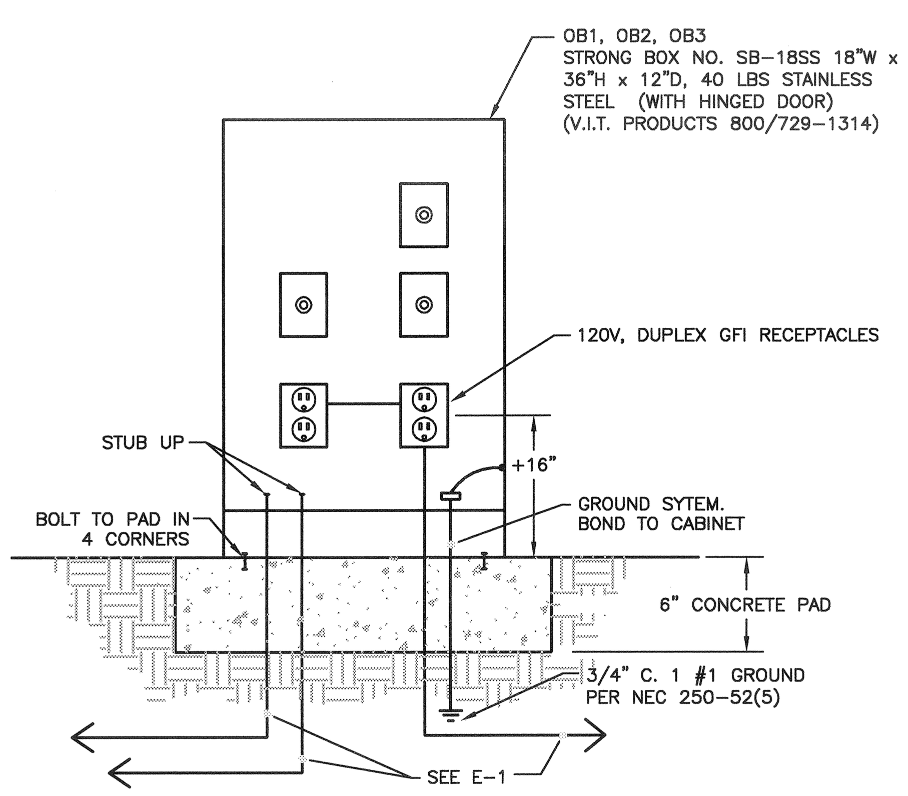

OB, OB2, OB3 CABINETS (C)
N.T.S.

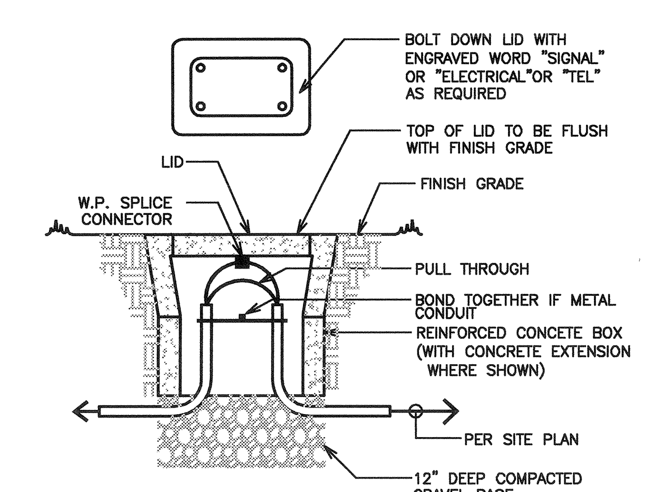

* NOTE: WHERE VAULT BOX IS ADJACENT TO CONCRETE WALK SET FLUSH NEXT TO WALKWAY

PULL BOX SCHEDULE

1	(1) = CHRISTY NO. N9 (10" X 15" X 12" DEEP) WITH FL9T FIBRELYTE LID.
1X	(1X) = SAME AS (1) EXCEPT WITH 12" DEEP EXTENSION.
2	(2) = CHRISTY NO. N16 (12" X 22" X 12" DEEP) WITH FL16T FIBRELYTE LID.
2X	(2X) = SAME AS (2) EXCEPT WITH 12" DEEP EXTENSION.
3	(3) = CHRISTY NO. N30 (13" X 24" X 12" DEEP) WITH FL30T FIBRELYTE LID.
3X	(3X) = SAME AS (3) EXCEPT WITH 12" DEEP EXTENSION.
4	(4) = CHRISTY NO. N36 (17" X 30" X 12" DEEP) WITH FL36T FIBRELYTE LID.
4X	(4X) = SAME AS (4) EXCEPT WITH 12" DEEP EXTENSION.
5	(5) = CHRISTY NO. N40 (24" X 30" X 14" DEEP) WITH N40T CONCRETE LID.
5X	(5X) = SAME AS (5) EXCEPT WITH 10" DEEP EXTENSION.
6	(6) = CHRISTY NO. N44 (20" X 44" X 12" DEEP) WITH N44 CONCRETE LID.
6X	(6X) = SAME AS (6) EXCEPT WITH 8" DEEP EXTENSION.
7	(7) = CHRISTY NO. N48 (30" X 48" X 14" DEEP) WITH N48T2 CONCRETE LID.
7X	(7X) = SAME AS (7) EXCEPT WITH 10" DEEP EXTENSION.
8	(8) = CHRISTY NO. N52 (30" X 60" X 14" DEEP) WITH N52-623 WITH TWO SECTION STEEL LID.
8X	(8X) = SAME AS (8) EXCEPT WITH 10" DEEP EXTENSION.

(TL) = TRAFFIC LID (STEEL) WHERE SHOWN. ALL LIDS TO BE BOLT DOWN. LIDS TO BE "FIBERLYTE" FOR PULL BOXES NO. 1, 2, 3 AND 4. CONCRETE LIDS FOR PULL BOXES NO. 5, 6, 7. STEEL LID FOR PULL BOX NO. 8. ALL LIDS TO BE ENGRAVED "ELECTRICAL" FOR POWER (OR "SIGNAL"FOR OTHERS).

ALL BOXES TO SET ON 12" COMPACTED GRAVEL BASE WIDTH X LENGTH OF BOX.

SPLICES:
COPPER CONDUCTOR SPLICES AND TAPS OF #8 AWG AND SMALLER SHALL BE MADE WITH WATERPROOF WIRE NUT CONNECTORS. KING SAFETY PRODUCTS #621, #622 OR #623. WHICH ARE THREE SIZES (OR EQUAL) THESE WIRE NUTS ARE U.L. LISTED FOR "WET" LOCATIONS AND CONTAIN A SEALANT PASTE.

COPPER CONDUCTOR SPLICES OF #6 AWG AND LARGER SHALL BE MADE WITH SPLIT-BOLT CONNECTORS SUCH AS BURNDY "SERVIT" (OR EQUAL) WITH DOUBLE WRAPPED "SCOTCH" #33+ ALL WEATHER VINYL PLASTIC ELECTRICAL TAPE OR WITH "E-Z SEAL" #2200 VINYL INSULATING PADS, BY 3M, OR WITH SIERRA/TOMIC #4000 VINYL SEAL PADS.

PULL BOX DETAIL (B)
N.T.S.

POWER AND TELEPHONE UTILITY GENERAL NOTES

A. UTILITY POINTS OF SERVICE AND WORK/MATERIAL SHOWN ARE BASED ON PRELIMINARY INFORMATION ONLY BY THE UTILITY COMPANIES AND ARE FOR BID PURPOSES ONLY.

B. LOCATIONS OF UTILITIES SHOWN ARE APPROXIMATE AND CONTRACTOR SHALL EXERCISE EXTREME CAUTION IN EXCAVATING AND TRENCHING ON THIS SITE TO AVOID EXISTING DUCTS, PIPING OR CONDUITS, ETC., AND TO PREVENT HAZARD TO PERSONNEL AND/OR DAMAGE TO EXISTING UNDERGROUND UTILITIES OR STRUCTURES WHETHER OR NOT SHOWN AND INSTALLED BY ANY OTHER CONTRACTS. THE ENGINEER IS NOT RESPONSIBLE FOR THE LOCATION UNDERGROUND UTILITIES OR STRUCTURES WHETHER OR NOT SHOWN OR DETAILED AND INSTALLED BY ANY OTHER CONTRACTS. THE CONTRACTOR SHALL IMMEDIATELY NOTIFY THE ENGINEER SHOULD SUCH UNIDENTIFIED CONDITIONS BE DISCOVERED. THESE DRAWINGS AND SPECIFICATIONS DO NOT INCLUDE THE NECESSARY ELEMENTS FOR CONSTRUCTION SAFETY.

C. CONTRACTOR SHALL COORDINATE WITH UTILITY COMPANY FOR FINAL AND EXACT WORK/MATERIAL REQUIREMENTS AND CONSTRUCT TO UTILITY COMPANY ENGINEERING PLANS AND SPECIFICATIONS ONLY. CONTRACTOR SHALL FURNISH AND INSTALL ALL CONDUIT, PULL WIRES, CABLES, PULLBOXES, CONCRETE ENCASEMENT OF CONDUIT (IF REQUIRED), TRANSFORMER PAD, BARRIERS, POLE RISERS, TRENCHING, BACKFILL, PAY ALL UTILITY COMPANY FEES AND INCLUDE ALL REQUIREMENTS IN SCOPE OF WORK.

D. CONTRACTOR SHALL SUBMIT SHOP DRAWINGS OF METER PANEL TO UTILITY CO. FOR UTILITY CO. APPROVAL PRIOR TO ORDERING AND INSTALLATION OF METER PANEL.

E. CALL "UNDERGROUND ALERT" BEFORE YOU DIG:
SOUTHERN CALIFORNIA: 1-800-227-2600

F. UTILITY CO. CONTACTS:
MR. VAHID BAZEL
CITY OF RIVERSIDE-PUBLIC UTILITIES

3900 MAIN STREET
RIVERSIDE, CA 92521
951/826-5830

CONSTRUCTION SET

0' 40' 80' 120'

REEDCORP ENGINEERING
CONSULTING ELECTRICAL ENGINEERS
2061 Business Center Drive, Suite 110
Irvine, CA 92612
(949) 752-1278 FAX: (949) 752-1287
E-MAIL : ee@reedcorp.net
04-216-1944

RHA
LANDSCAPE ARCHITECTS PLANNERS, INC.
3612 MISSION INN AVE
RIVERSIDE, CALIFORNIA 92501
LIC. #1512
PH. (909) 781-1930
FAX (909) 686-8091

© R H A Landscape Architects –Planners, Inc. expressly reserves its common law copyright and other property rights in these plans. These plans are not to be reproduced, changed or copied in any form or manner whatsoever nor are they to be assigned to any third party without first obtaining the express written permission.

CLIENT:
THE CITY OF RIVERSIDE
PARK AND RECREATION DEPT.
3900 Main Street
Riverside, California 92522

PROJECT:
Reid Park Expansion
Community Park
Orange St. and Garner Rd.

REVISIONS	DATE	BY
1 MISC.	1/26/06	RR

REGISTERED PROFESSIONAL ENGINEER THOMAS E. HARTMAN No. 7531 Exp: 9/30/06 ELECTRICAL STATE OF CALIFORNIA

SHEET TITLE
ELECTRICAL SITE PLAN

DESIGNED	MR
DRAWN	MR
CHECKED	RR
DATE	01-17-06
SCALE	1"=40'-0"
JOB NO.	

SHEET
E-2
OF 6 SHEETS

[One Inch on Original Sheet] Drawing File: N:\Projects\03prj\03111 Reid Park Expansion\AutoCAD\Elec Dwgs\Autocad Drawings from Reedcorp on 8-8-06\E-2 Electrical Site Plan - S E-2 Electrical Site Plan Aug 10, 2006 - 2:41pm

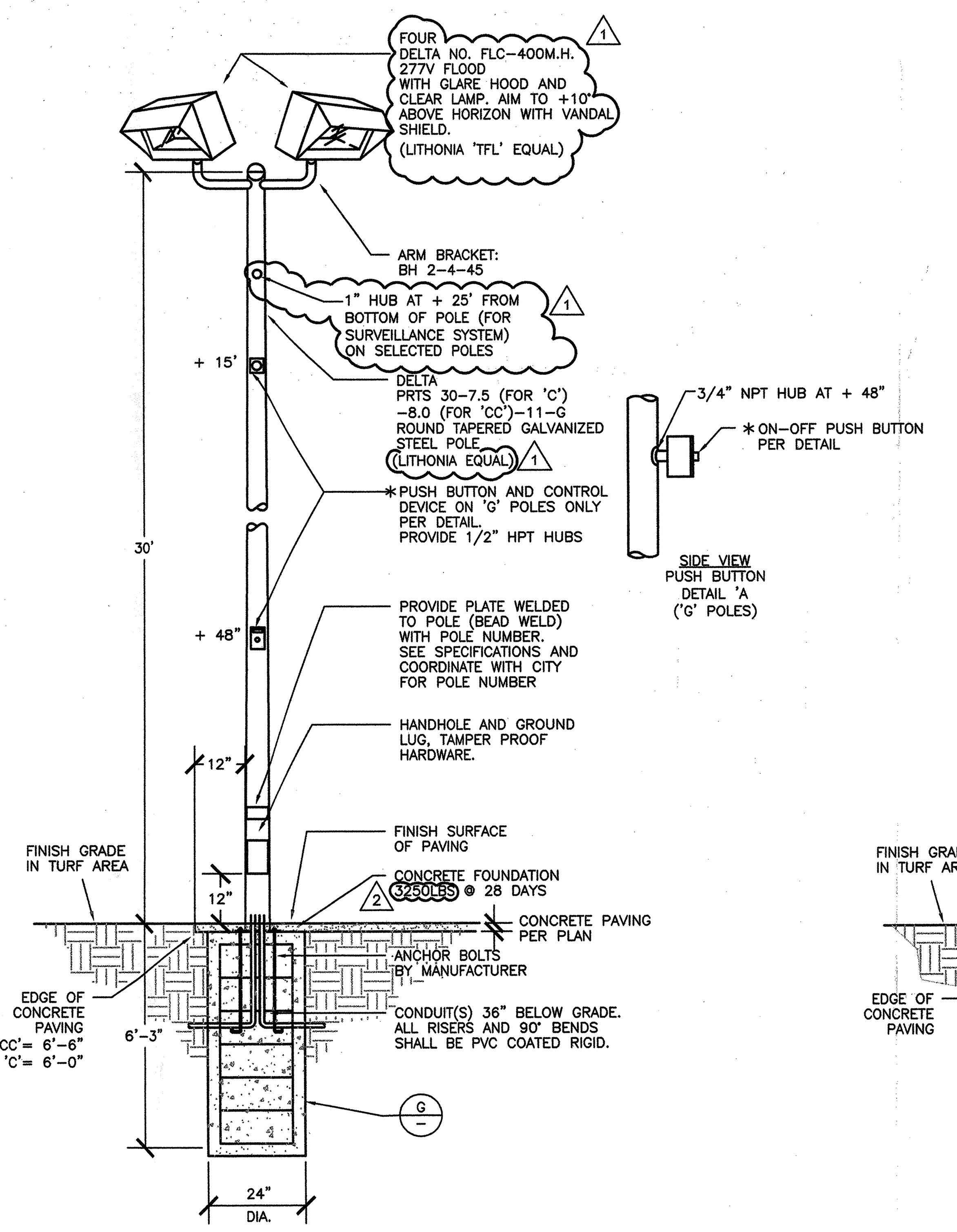

(BASKET BALL) FIXTURE 'C' AND 'CC' (D)
N.T.S.

* LIGHT STANDARD 'F'= TWO FIXTURES
* LIGHT STANDARD 'G'= TWO FIXTURES WITH ON/OFF CONTROLS

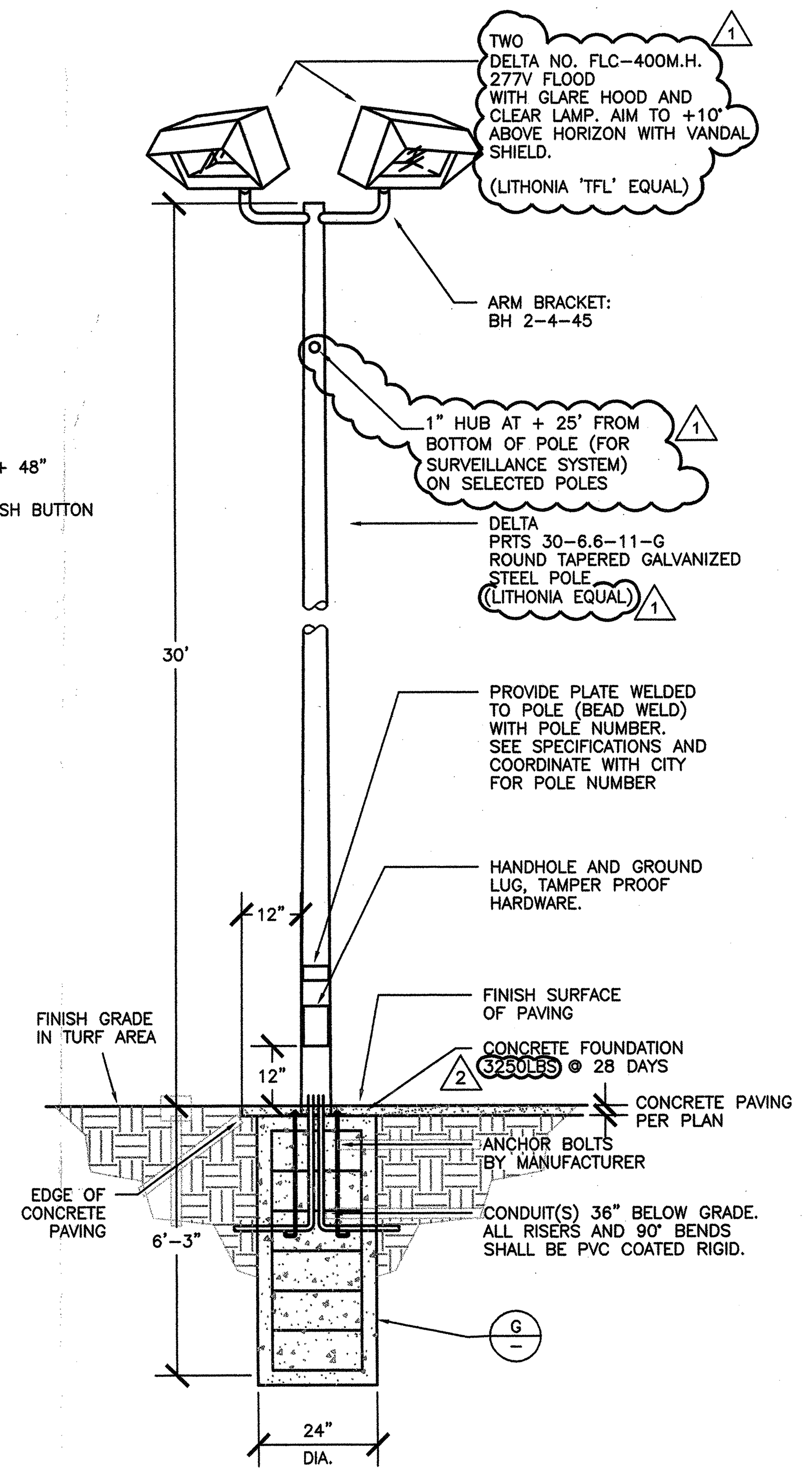

(TOT LOT) FIXTURE 'B' (C)
N.T.S.

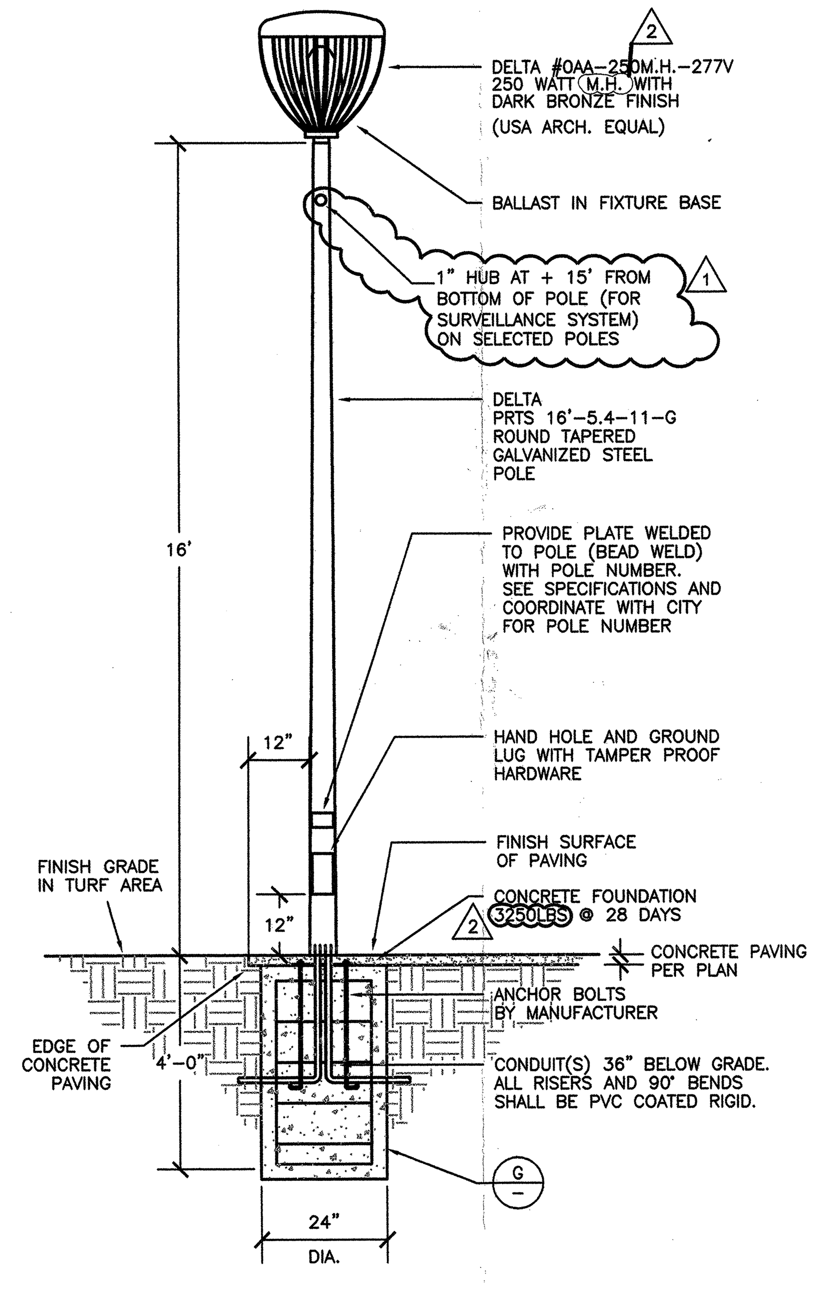

(WALKWAY) FIXTURE 'A' (B)
N.T.S.

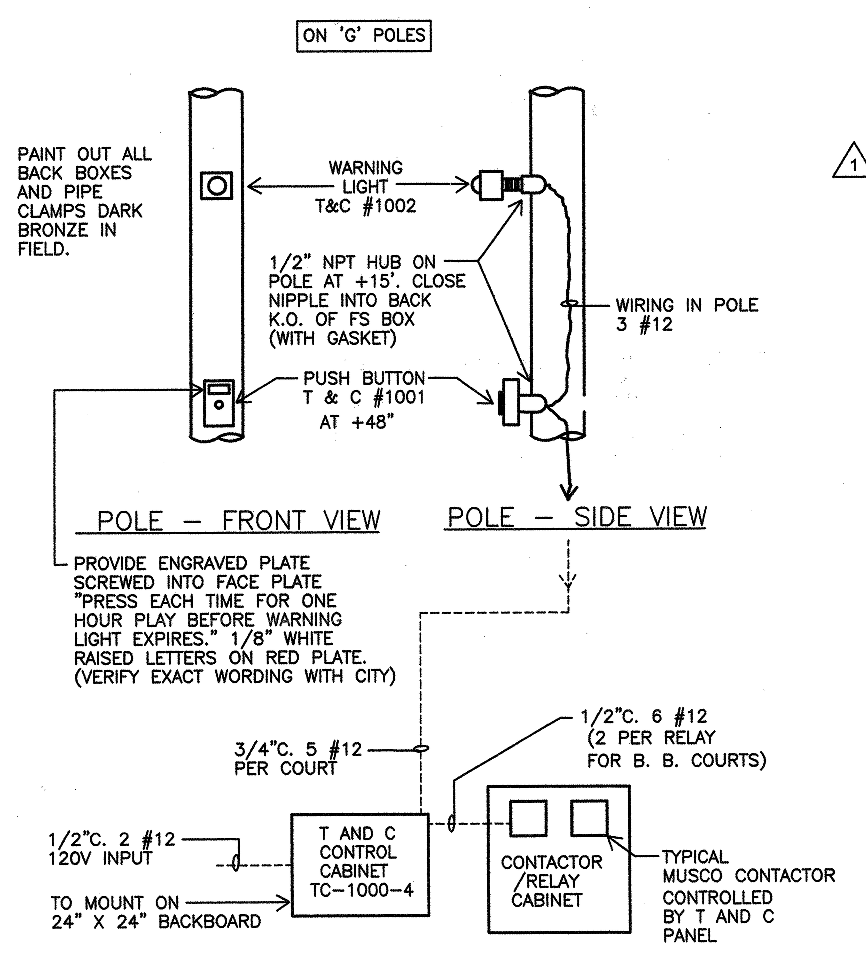

T AND C SYSTEM OPERATION AND SPECIFICATIONS:

A. CONTROL PANEL WITH:

1. 24 HOUR TIME CLOCK TO DETERMINE WHEN THE SYSTEM WILL BE IN OPERATION. SET HOURS PER CITY REQUIREMENTS.
2. ONE HOUR TIMERS TO DETERMINE THE LENGTH OF TIME THE LIGHTS WILL BE ON. EACH TIME THE OPERATOR PRESSES THE TC 1001 PUSH BUTTON "ON" THE TIME WILL BE RESET TO ONE HOUR. BUZZER SOUNDS A ONE MINUTE WARNING BE RESET TO ONE HOUR. BUZZER SOUNDS A ONE MINUTE WARNING BEFORE THE LIGHTS ARE TO GO OUT. (THE BUZZER SHALL HAVE A VOLUME CONTROL.) (1)
3. CONTROL RELAYS TO DE-ENERGIZE THE LIGHTING CONTACTORS WHEN THE 24 HOUR TIMER SHUTS DOWN THE SYSTEM. THIS ALLOWS THE ONE HOUR TIMER TO COMLETE ITS CYCLE READY TO START OPERATION THE NEXT DAY WITHIN TIME CLOCK SETTING.
4. TERMINAL BLOCKS FOR ELECTRICAL CONTACTORS TO HOOK-UP.

   THE TC 1000-* TO BE MOUNTED ON PANELS ONLY AS FOLLOWS:

   ☒ TC 1000-4 ON A HOFFMAN PANEL A24P24(21X21) - (BACKBOARD ONLY)
5. PANEL ENCLOSURE:

   ☒ MOUNT T AND C PANEL IN NEMA 1 ENCLOSURE WITH PAD LOCKABLE DOOR VERIFY EXACT SIZE REQUIRED.

   ☐ MOUNT T AND C PANEL INSIDE SWITCHGEAR AS SHOWN.

B. EXTERNAL DEVICES

1. THE TC 1001 IS THE "ON-OFF" PUSH BUTTON STATION TO MOUNT ON POLE.
2. THE TC 1002 IS THE WARNING HORN AND PILOT LIGHT. THE HORN WILL SOUND AND THE PILOT LIGHT WILL LIGHT APPROXIMATELY ONE MINUTE BEFORE THE ONE HOUR TIMER (COURT LIGHTS) ARE ABOUT TO TIME OUT. THE HORN WILL SOUND ONLY FOR THE TIME SET ON THE TIME DELAY IN THE CONTROL CABINET. MOUNT ON POLE.
3. ONE TC 1001 AND ONE TC 1002 ARE REQUIRED FOR EACH COURT.

C. T AND C INDUSTRIES
1121 NORTH CEDAR STREET
GLENDALE, CA 91207
818/240-3600
FAX: 818/547-9359

T AND C CONTROL DATA (BASKETBALL COURTS) (A)
N.T.S.

PROVIDE 3/4" NPT HUB AT + 15 FT. ON THE FOLLOWING POLES PER NOTE (73) ON SHT. E-1
A= 6 POLES
B= 1 POLE
E= 1 POLE
F= 4 POLES
TB= 1 POLE
CC= 1 POLE

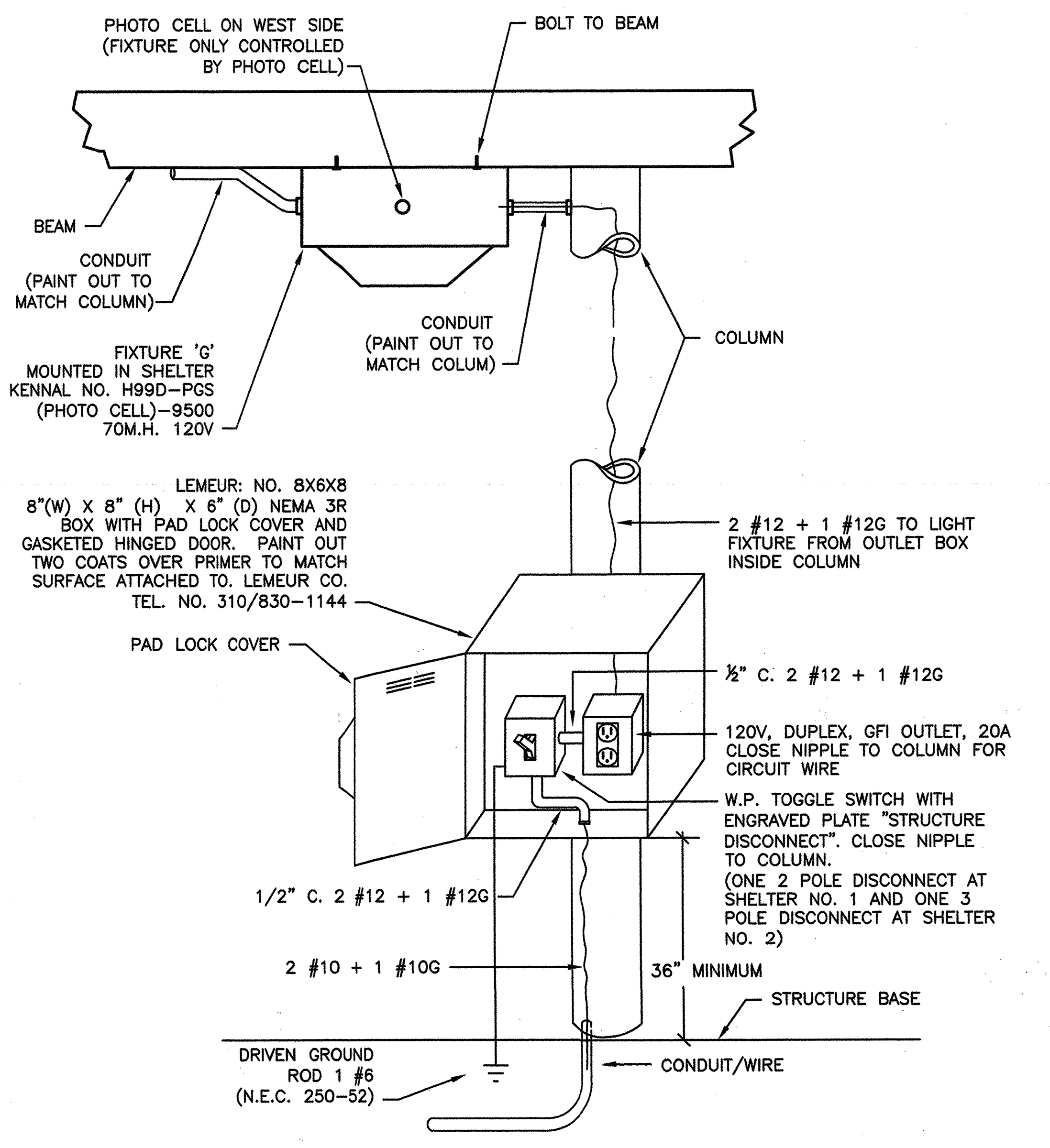

OUTLET BOX AND FIXTURE 'G' DETAIL (I)
N.T.S.

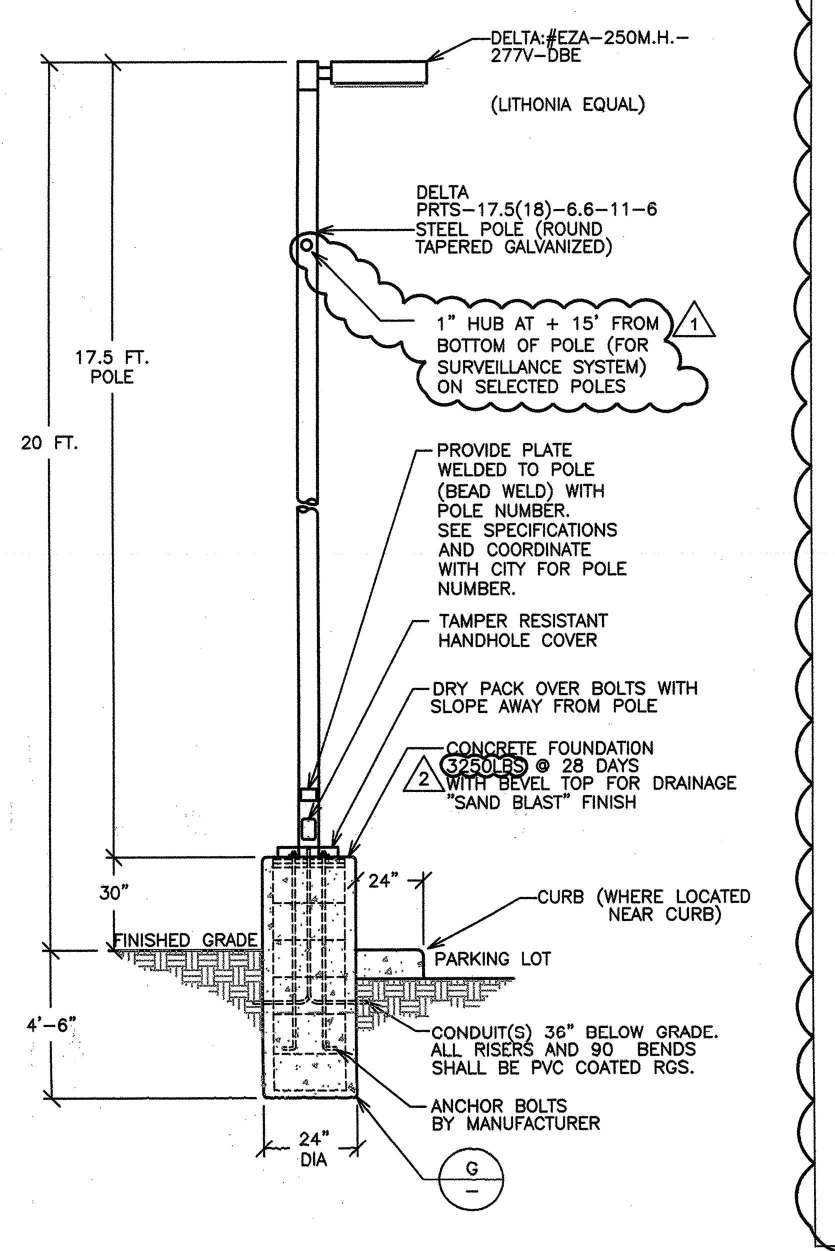

(PARKING LOT) FIXTURE 'F' (H)
N.T.S.

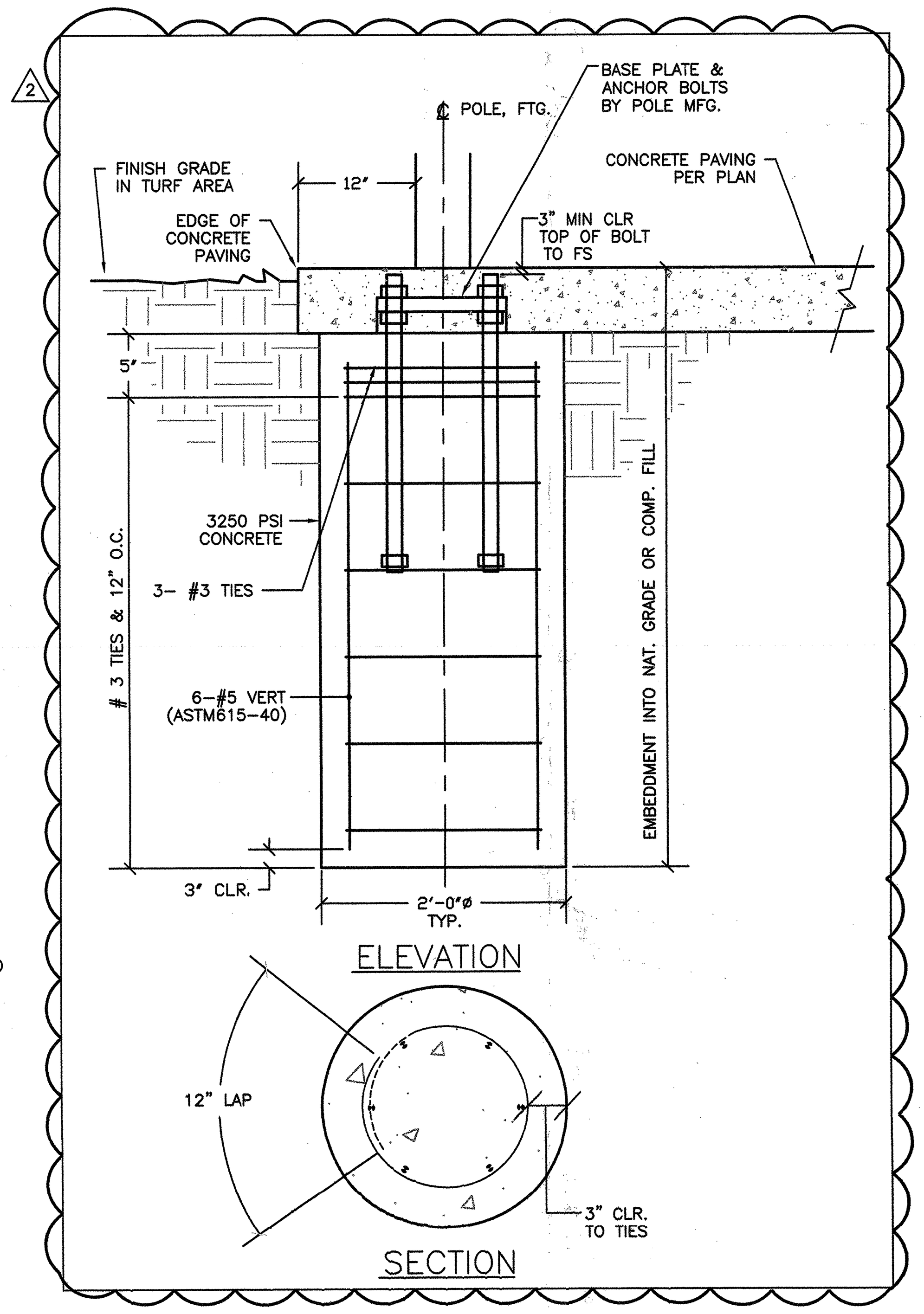

TYPICAL POLE FOOTING DETAIL (G)
N.T.S.

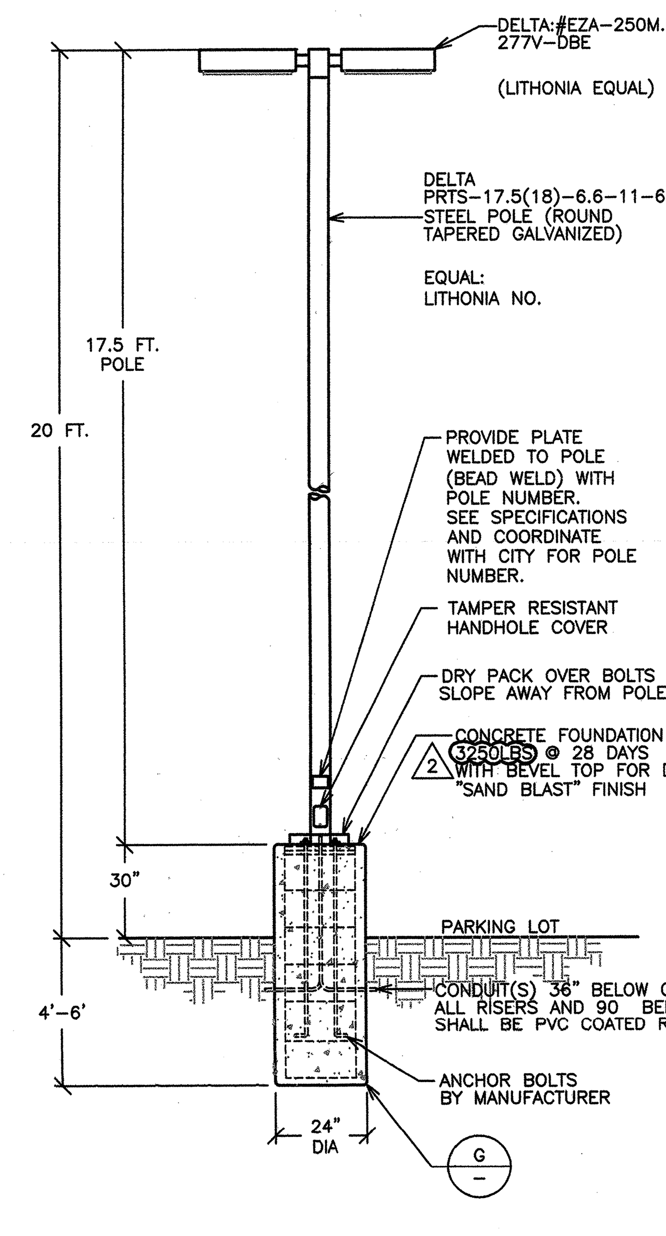

(PARKING LOT) FIXTURE 'E' (F)
N.T.S.

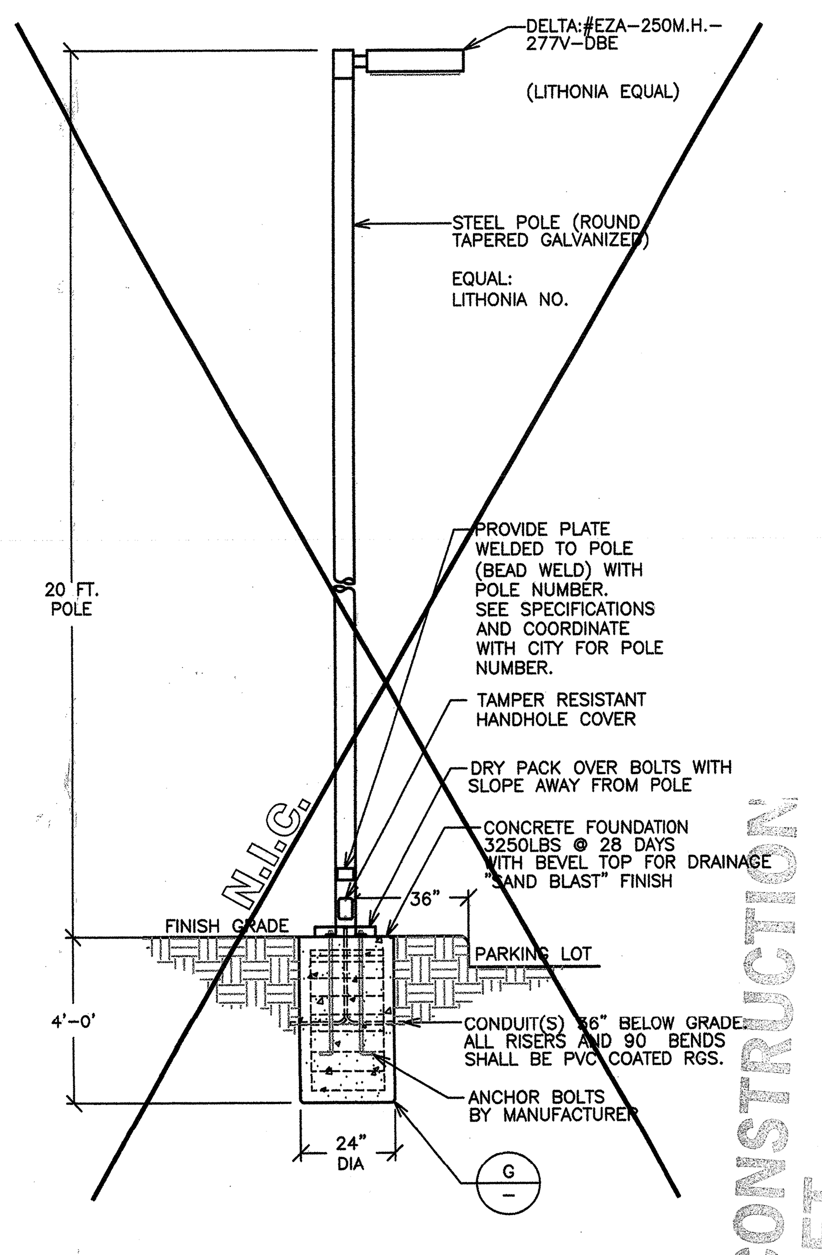

(PARKING LOT) FIXTURE 'D' (E)
(N.I.C.) N.T.S.

CONSTRUCTION SET

REEDCORP ENGINEERING
CONSULTING ELECTRICAL ENGINEERS
2061 Business Center Drive, Suite 110
Irvine, CA 92612
(949) 752-1278 FAX: (949) 752-1287
E-MAIL : ee@reedcorp.net
04-216-1944

REGISTERED PROFESSIONAL ENGINEER WILLIAM J. CORREIA No. 2132 Exp. 12/31/07 STRUCTURAL STATE OF CALIFORNIA

RHA LANDSCAPE ARCHITECTS PLANNERS, INC.
3612 MISSION INN AVE
RIVERSIDE, CALIFORNIA 92501
LIC. #1512
PH. (909) 781-1930
FAX (909) 686-8091

© R H A Landscape Architects -Planners, Inc. expressly reserves its common law copyright and other property rights in these plans. These plans are not to be reproduced, changed or copied in any form or manner whatsoever nor are they to be assigned to any third party without first obtaining the express written permission.

CLIENT:
THE CITY OF RIVERSIDE
PARK AND RECREATION DEPT.
3900 Main Street
Riverside, California 92522

PROJECT:
Reid Park Expansion
Community Park
Orange St. and Garner Rd.

REVISIONS	DATE	BY
1 MISC.	1/26/06	RR
2 MISC.	7/18/06	RR

REGISTERED PROFESSIONAL ENGINEER THOMAS E. HARTMAN No. 7531 Exp: 9/30/06 ELECTRICAL STATE OF CALIFORNIA

SHEET TITLE
ELECTRICAL DETAILS

DESIGNED	MR
DRAWN	MR
CHECKED	RR
DATE	01-17-06
SCALE	AS NOTED
JOB NO.	

SHEET
E-3
OF 6 SHEETS

[One Inch on Original Sheet] Drawing File: \\reedcorp\cad drawings\SDSKPROJ\1944\Reid Park\Sheets\E-3 Electrical Details Aug 09, 2006 - 1:42pm

\\reedcorp\cad drawings\SDSKPROJ\1944\Reid Park\Sheets\E-3 Electrical Details.dwg, E-3 Electrical Details, 8/9/2006 1:42:04 PM, marioh, HP DesignJet 1050C by HP E1.pc3, Reedcorp Engineering, Inc., Reedcorp Engineering, Inc.

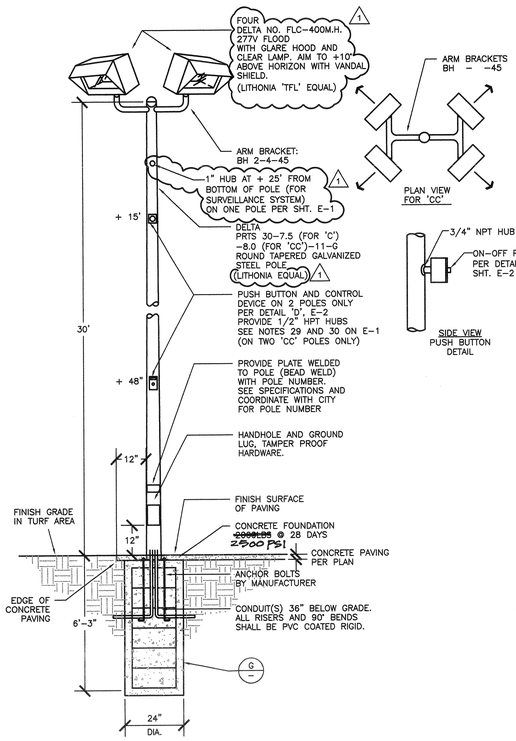

(BASKET BALL) FIXTURE 'C' AND 'CC' (D)

N.T.S.

* LIGHT STANDARD 'C'= TWO FIXTURES
* LIGHT STANDARD 'CC'= FOUR FIXTURES
* TWO 'CC' POLES TO HAVE CONTROLS ON/OFF CONTROL DEVICES

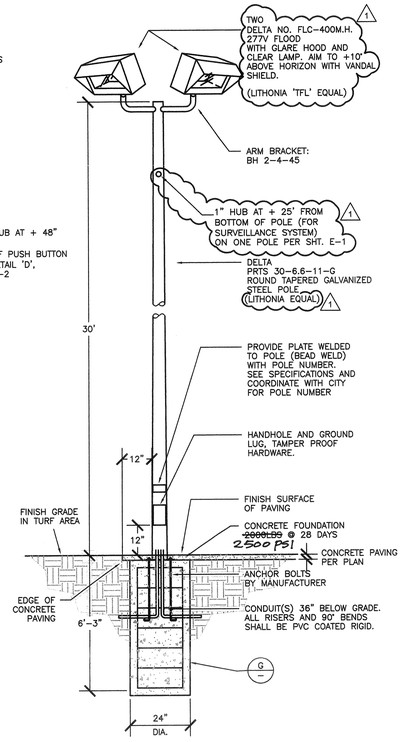

(TOT LOT) FIXTURE 'B' (C)

N.T.S.

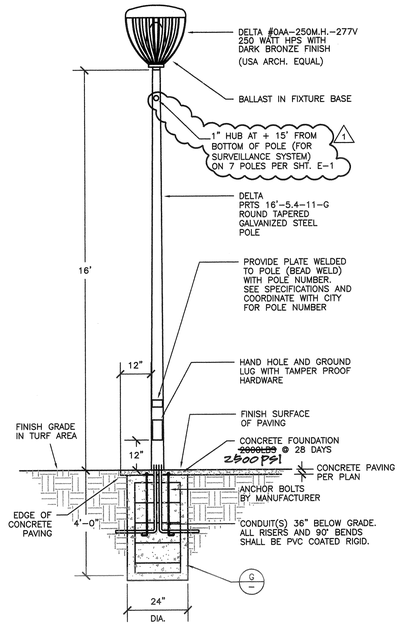

(WALKWAY) FIXTURE 'A' (B)

N.T.S.

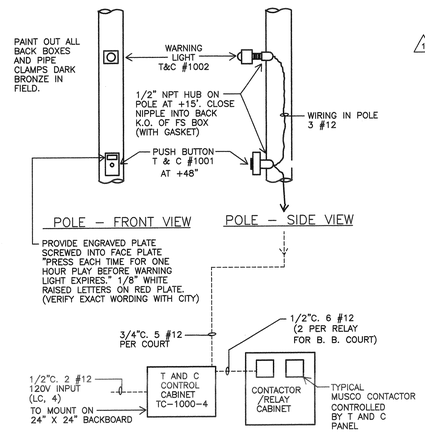

T AND C CONTROL DATA (BASKETBALL COURTS) (A)

N.T.S.

T AND C SYSTEM OPERATION AND SPECIFICATIONS:

A. CONTROL PANEL WITH:

1. 24 HOUR TIME CLOCK TO DETERMINE WHEN THE SYSTEM WILL BE IN OPERATION. SET HOURS PER CITY REQUIREMENTS.
2. (1) ONE HOUR TIMERS TO DETERMINE THE LENGTH OF TIME THE LIGHTS WILL BE ON. EACH TIME THE OPERATOR PRESSES THE TC 1001 PUSH BUTTON "ON" THE TIME WILL BE RESET TO ONE HOUR. BUZZER SOUNDS A ONE MINUTE WARNING BE RESET TO ONE HOUR. BUZZER SOUNDS A ONE MINUTE WARNING BEFORE THE LIGHTS ARE TO GO OUT. (THE BUZZER SHALL HAVE A VOLUME CONTROL.)
3. CONTROL RELAYS TO DE-ENERGIZE THE LIGHTING CONTACTORS WHEN THE 24 HOUR TIMER SHUTS DOWN THE SYSTEM. THIS ALLOWS THE ONE HOUR TIMER TO COMLETE ITS CYCLE READY TO START OPERATION THE NEXT DAY WITHIN TIME CLOCK SETTING.
4. TERMINAL BLOCKS FOR ELECTRICAL CONTACTORS TO HOOK-UP.

   THE TC 1000-* TO BE MOUNTED ON PANELS ONLY AS FOLLOWS:

   ☒ TC 1000-4 ON A HOFFMAN PANEL A24P24(21X21) - (BACKBOARD ONLY)
5. PANEL ENCLOSURE:

   ☒ MOUNT T AND C PANEL IN NEMA 1 ENCLOSURE WITH PAD LOCKABLE DOOR VERIFY EXACT SIZE REQUIRED.

   ☐ MOUNT T AND C PANEL INSIDE SWITCHGEAR AS SHOWN.

B. EXTERNAL DEVICES

1. THE TC 1001 IS THE "ON-OFF" PUSH BUTTON STATION TO MOUNT ON POLE.
2. THE TC 1002 IS THE WARNING HORN AND PILOT LIGHT. THE HORN WILL SOUND AND THE PILOT LIGHT WILL LIGHT APPROXIMATELY ONE MINUTE BEFORE THE ONE HOUR TIMER (COURT LIGHTS) ARE ABOUT TO TIME OUT. THE HORN WILL SOUND ONLY FOR THE TIME SET ON THE TIME DELAY IN THE CONTROL CABINET. MOUNT ON POLE.
3. ONE TC 1001 AND ONE TC 1002 ARE REQUIRED FOR EACH COURT.

C. T AND C INDUSTRIES
1121 NORTH CEDAR STREET
GLENDALE, CA 91207
818/240-3600
FAX: 818/547-9359

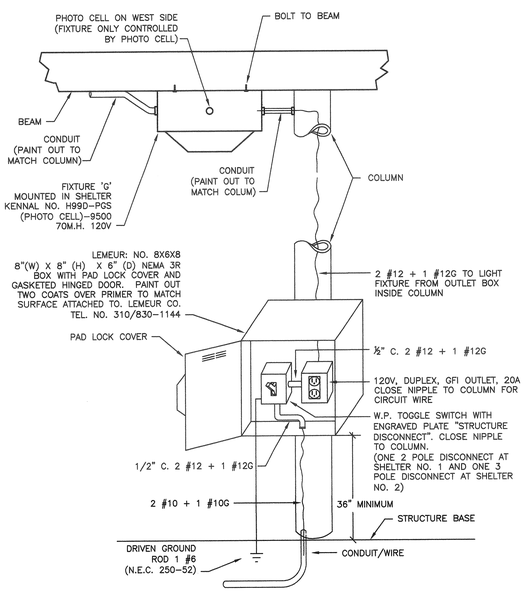

OUTLET BOX AND FIXTURE 'G' DETAIL (I)

N.T.S.

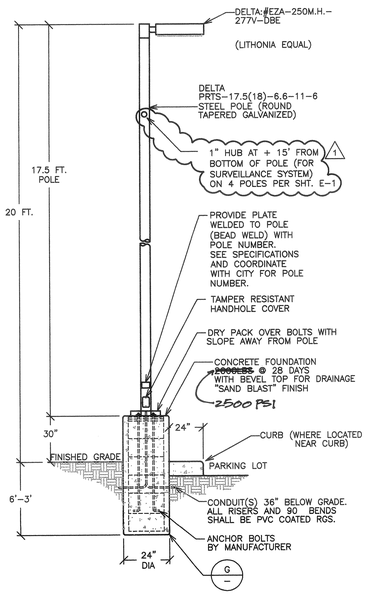

(PARKING LOT) FIXTURE 'F' (H)

N.T.S.

POLE, BASE PLATE & ANCHOR BOLTS BY POLE MANUF. ANCHOR BOLTS NEED TO BE EMBEDDED INTO FTG.

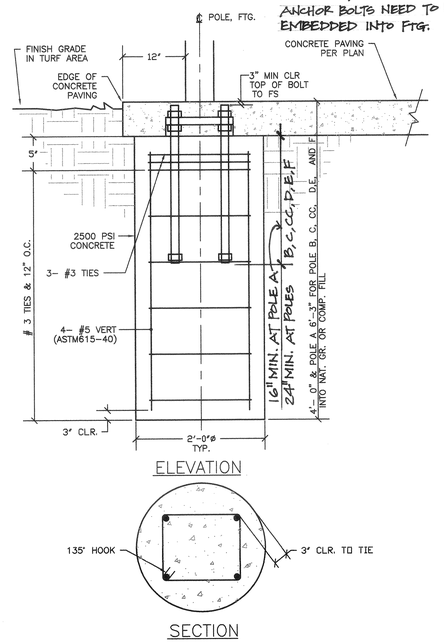

TYPICAL POLE FOOTING DETAIL (G)

N.T.S.

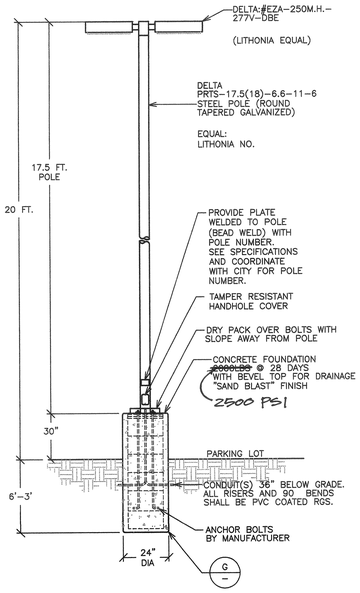

(PARKING LOT) FIXTURE 'E' (F)

N.T.S.

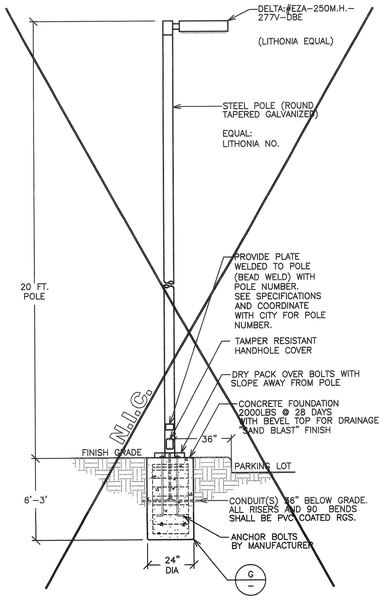

(PARKING LOT) FIXTURE 'D' (E)

(N.I.C.) N.T.S.

PROVIDE 3/4" NPT HUB AT + 15 FT. ON THE FOLLOWING POLES PER NOTE (73) ON SHT. E-1
A= 6 POLES
B= 1 POLE
E= 1 POLE
F= 4 POLES
TB= 1 POLE
CC= 1 POLE

REEDCORP ENGINEERING
CONSULTING ELECTRICAL ENGINEERS
2061 Business Center Drive, Suite 110
Irvine, CA 92612
(949) 752-1278 FAX: (949) 752-1287
E-MAIL : ee@reedcorp.net
04-216-1944

RHA LANDSCAPE ARCHITECTS PLANNERS, INC.
3612 MISSION INN AVE
RIVERSIDE, CALIFORNIA 92501
LIC. #1512
PH. (909) 781-1930
FAX (909) 686-8091

© R.H.A. Landscape Architects -Planners, Inc. expressly reserves its common law copyright and other property rights in these plans, assigned to any third party without first obtaining the express written permission. These plans are not to be reproduced, changed or copied in any form or manner whatsoever nor are they to be

CLIENT:
THE CITY OF RIVERSIDE
PARK AND RECREATION DEPT.
3900 Main Street
Riverside, California 92522

PROJECT:
Reid Park Expansion
Community Park
Orange St. and Garner Rd.

REVISIONS	DATE	BY
1 MISC.	1/26/06	RR

REGISTERED PROFESSIONAL ENGINEER THOMAS E. HARTMAN No. 7531 Exp: 9/30/06 ELECTRICAL STATE OF CALIFORNIA

SHEET TITLE
ELECTRICAL DETAILS

DESIGNED	MR
DRAWN	MR
CHECKED	RR
DATE	01-17-06
SCALE	AS NOTED
JOB NO.	

SHEET
E-3
OF 6 SHEETS

ATTACHMENT FIVE ADDENDUM THREE, 2/8/06

[One Inch on Original Sheet] Drawing File: \\REEDCORP\Cad Drawings\SDSREPROJ\1944\Reid Park\Sheets\E-3 Electrical Details Jan 30, 2006 - 9:50am
\\REEDCORP\Cad Drawings\SDSREPROJ\1944\Reid Park\Sheets\E-3 Electrical Details.dwg, E-3 Electrical Details, 1/30/2006 9:50:57 AM, marioh, HP Designjet 1050C by HP El.pc3, Reedcorp Engineering, Inc., Reedcorp Engineering, Inc.

\\reedcorp\cad drawings\SDSKPROJ\1944\Reid Park\Sheets\E-4 Musco Electrical Details.dwg, E-4 Musco Electrical Details, 8/9/2006 1:41:34 PM, marioh, HP DesignJet 1050C by HP E1.pc3, Reedcorp Engineering, Inc., Reedcorp Engineering, Inc.

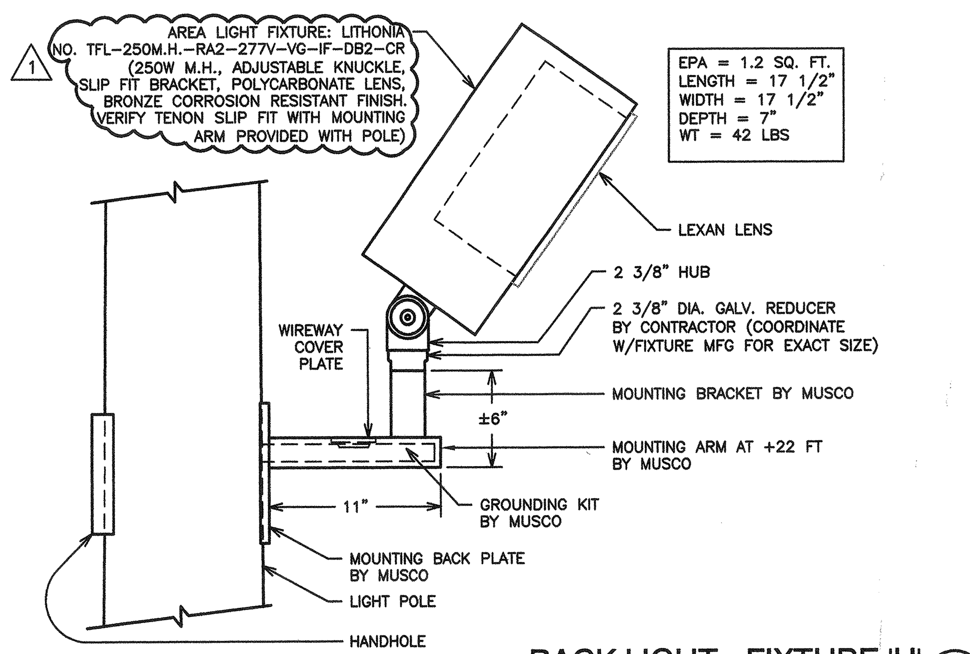

BACK LIGHT - FIXTURE 'H' (C)
N.T.S.

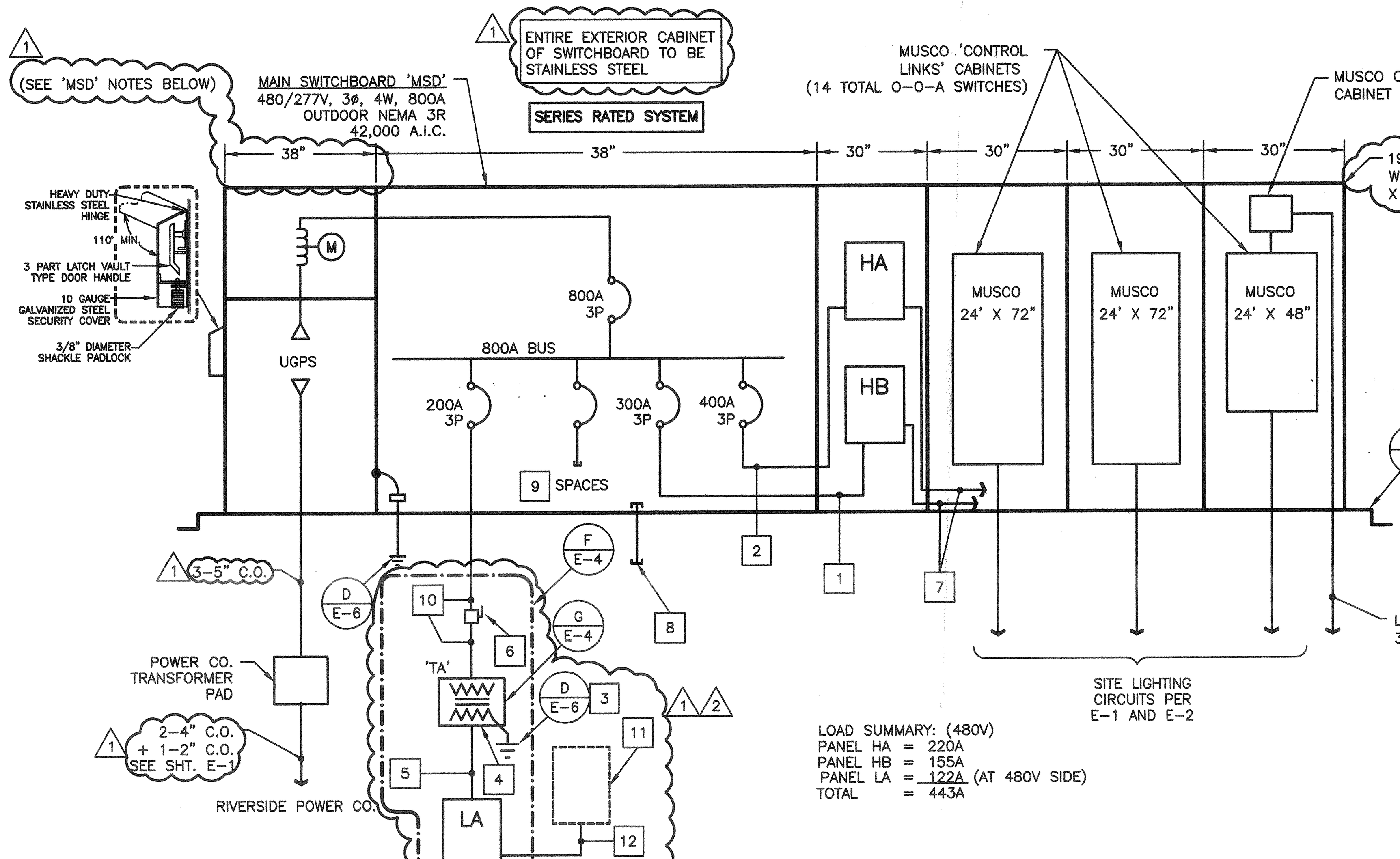

ONE LINE DIAGRAM (E)
N.T.S.

ONE LINE DIAGRAM NOTES:

1. 3" C. 4 #350 MCM + 1 #4G.
2. 4" C. 4 #500 MCM + 1 #3G.
3. 1 #1 TO SERVICE GROUND.
4. 75 KVA, 480-120/240V. 1ø, 3W DRY TYPE TRANSFORMER BOLTED TO FLOOR. (37" HIGH X 30" WIDE X 24" DEEP; 610 LBS.) NEMA 3R.
5. 3 1/2 " C. 4 #500MCM + 1 #3G.
6. 480V, 3ø, 200A/3P NON-FUSED DISCONNECT MOUNTED TO TRANSFORMER 'TA'.
7. LIGHTING CIRCUITS TO 'HA/HB' FROM MUSCO CONTACTORS. CONDUITS/WIRES TO MATCH E-1 LIGHTING CIRCUITS.
8. STUB OUTS PER E-5, DETAIL 'B'.
9. MINIMUM TWO 100A/3P SPACES.
10. 2 1/2" C. 3⁄6 + 1 #4G
11. 100A/2P 120/240V, 3ø, 3W PANEL PROVIDED WITH PRE-FAB BUILDING.
12. 1 ½" C. 3 #1 + 1 #8 GROUND (LA, 39, 41)

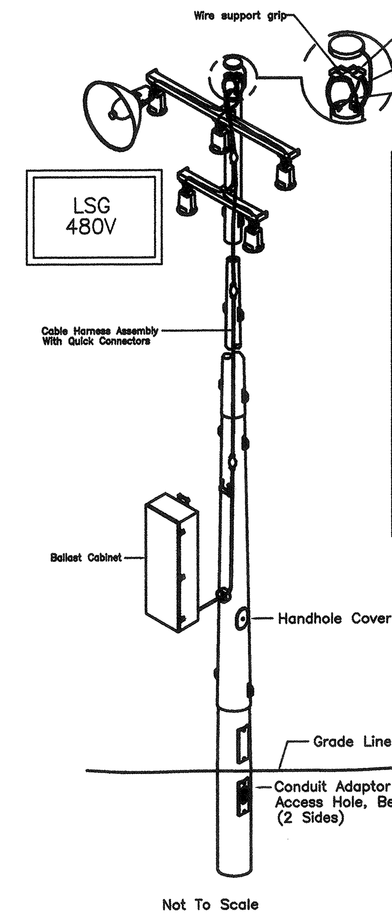

BALLAST CABINET – CIRCUIT BREAKER SCHEDULE						
VOLTAGE	SYSTEM PHASE	METAL HALIDE 1500W # OF FIXTURES	METAL HALIDE 1000W # OF FIXTURES	MAX. AMP RATING	LUG SIZE	WIRE SIZE
480	THREE PHASE	1–6	1–9	35	(1) #14–1/0	#3
480		7–12	10–18	60	(1) #14–1/0	#3
480		13–20	19–20	109	(1) #14–1/0	#3
480		21–35	31–52	175	(1) #6–350 MCM	#2/0
277		1–3	1–5	35	(1) #14–1/0	#3
277		4–7	6–10	60	(1) #14–1/0	#3
277		8–12	11–18	109	(1) #14–1/0	#3
277		13–20	19–31	175	(1) #6–350 MCM	#2/0
240	OR	1–3	1–4	35	(1) #14–1/0	#3
240		4–8	5–9	60	(1) #14–1/0	#3
240		7–10	10–15	100	(1) #14–1/0	#3
240		11–18	16–29	175	(1) #1–500 MCM OR (2) #1–250 MCM	#3
208	SINGLE	1–2	1–4	35	(1) #14–1/0	#3
208		3–5	5–8	60	(1) #14–1/0	#3
208		6–8	9–13	100	(1) #14–1/0	#3
208		9–15	14–23	175	(1) #1–500 MCM OR (2) #1–250 MCM	#3

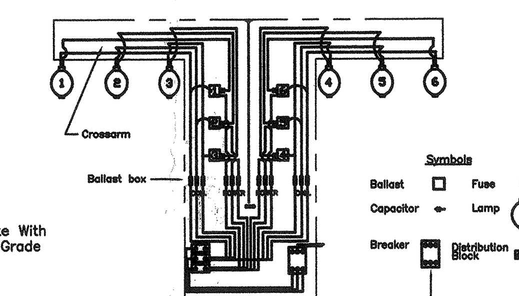

POLE WIRING SYSTEM

WIRING SCHEMATIC
(Ballast Cabinet)

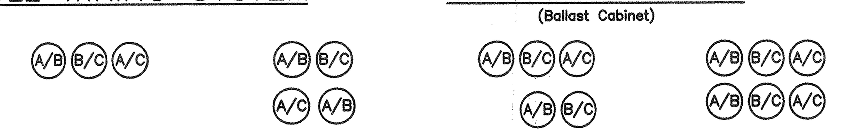

THREE FIXTURES
PHASE A = 2 FIX.
PHASE B = 2 FIX.
PHASE C = 2 FIX.

FOUR FIXTURES
PHASE A = 3 FIX.
PHASE B = 3 FIX.
PHASE C = 2 FIX.

FIVE FIXTURES
PHASE A = 3 FIX.
PHASE B = 4 FIX.
PHASE C = 3 FIX..

SIX FIXTURES
PHASE A = 4 FIX.
PHASE B = 4 FIX.
PHASE C = 4 FIX.

TYPICAL WIRING OF FIXTURES WITH 3ø DISTRIBUTION

BALLFIELD POLE DETAIL (B)
N.T.S.

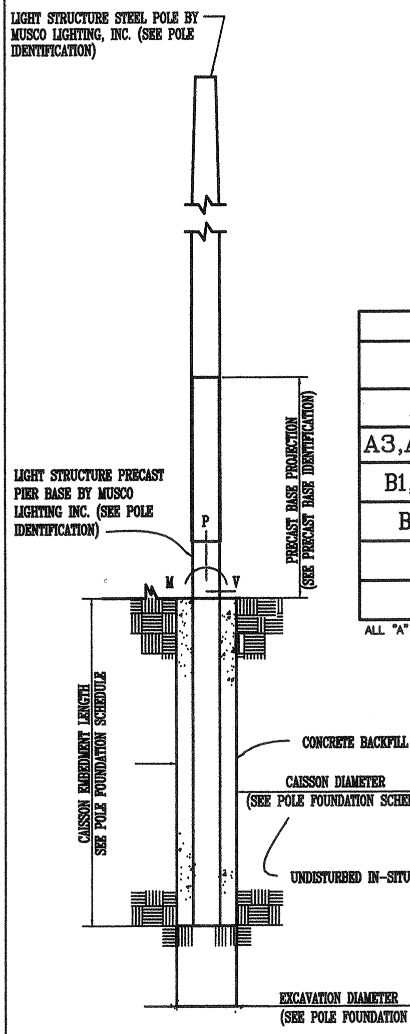

FOUNDATION DETAIL

POLE FOUNDATION SCHEDULE

TYPE	FORCES (MAXIMUM) MOMENT (M) KIP-FT	SHEAR (V) KIPS	VERTICAL (P) KIPS	CAISSON DIAMETER INCH	EMBEDMENT FEET
LS60–A	28.13	0.805	1.150	30"	10'–0"
LS70–AA	36.38	0.887	1.357	30"	10'–0"
LS70–A	44.42	1.061	1.663	30"	12'–0"
LS80–A	96.90	1.433	2.506	30"	14'–0"
LS90–A	108.23	1.909	3.563	36"	16'–0"

POLE IDENTIFICATION

LOCATION MARK	POLE TYPE	PRECAST BASETYPE	FIXTURE CONFIGURATION (FIXTURES PER CROSSARM)	FIXTURE EPA
A1, A2	LS60–A	2B	4	9.6
A3,A4,A5,A6	LS70–AA	2B	4	9.6
B1,B2,C5,C6	LS70–A	3B	6(3+3)	13.8
B3,B5,B6	LS80–A	4B	7(4+3)	16.1
B4	LS80–A	4B	8(4+4)	17.6
C2,C4	LS90–A	5B	12(6+6)	25.2

ALL "A" POLES AND "B1" THROUGH "B4" POLES HAVE A SECURITY LIGHT MOUNTED AT + 22' AGL.

THIS DRAWING IS A COPY OF THE SIGNED STRUCTURAL ENGINEERS CALCULATIONS

PRECAST BASE TYPE	WEIGHT LBS	OVERALL LENGTH FEET	HEIGHT ABOVE GRADE	EMBEDMENT IN CAISSON FEET	OUTSIDE DIAMETER INCHES
2B	1.840	17'–3"	7'–3"	10'–0"	12.00"
3B	2.670	20'–0"	8'–0"	12'–0"	13.38"
4B	3.710	22'–0"	8'–0"	14'–0"	15.75"
5B	5.180	23'–11"	7'–11"	16'–0"	18.25"

REGISTERED PROFESSIONAL ENGINEER RICHARD L. FOLEY No. 2407 8/10/06 Exp. 6-30-07 STRUCTURAL STATE OF CALIFORNIA

STRUCTURAL FOR MUSCO LIGHTPOLE ONLY

GENERAL NOTES

GENERAL

ALL CONSTRUCTION AND WORKMANSHIP SHALL CONFORM TO THE UNIFORM BUILDING CODE, 2001 EDITION.

WIND :70 MPH (EXPOSURE C)

REFERENCE POLE LOCATION DRAWING FOR ACTUAL POLE PLACEMENT AND SITE LOCATION.

THE CONTRACTOR IS SOLELY RESPONSIBLE FOR ALL CONSTRUCTION PROCEDURES AND SAFETY CONDITIONS AT THE JOB SITE.

SOIL DESIGN PARAMETERS

ALLOWABLE END BEARING SOIL PRESSURE: 1,000 PSF OR 167 PSF SKIN FRICTION

ALLOWABLE LATERAL PASSIVE SOIL BEARING PRESSURE: 267 PSF/FT (AT LEVEL CONDITIONS)

REFERENCE CHAPTER 18, SECTION 1806.8.2.1 AND TABLE 18-1-A OF THE 2001 EDITION OF THE CALIFORNIA BUILDING CODE.

DESIGN SOIL PARAMETERS ARE AS NOTED. ACTUAL ALLOWABLE SOIL PARAMETERS MUST BE VERIFIED BY A GEOTECHNICAL ENGINEER.

ENCOUNTERING SOIL FORMATIONS THAT WILL REQUIRE SPECIAL DESIGN CONSIDERATIONS OR EXCAVATION PROCEDURES MAY EXIST. POLE FOUNDATIONS MAY NEED TO BE REANALYZED ACCORDING TO THE SOIL CONDITIONS THAT EXISTS.

IF ANY DISCREPANCIES OR INCONSISTENCIES ARISE NOTIFY THE ENGINEER OF SUCH DISCREPANCIES. FOUNDATIONS WILL THEN BE REVISED ACCORDINGLY.

ALL PIERS AND CONCRETE BACKFILL MUST BEAR ON AND AGAINST FIRM, UNDISTURBED SOIL.

ALL EXCAVATIONS MUST BE FREE OF LOOSE SOIL AND DEBRIS PRIOR TO FOUNDATION INSTALLATION AND PLACEMENT OF CONCRETE BACKFILL. CASING MAY BE REQUIRED IF CASING OCCURS.

ALL EXCAVATIONS MUST BE FREE OF WATER OR CONCRETE SHALL BE PLACED WITH A TREMIE PIPE IN ACCORDANCE WITH ACI STANDARD 304. CONCRETE PLACE BY THE TREMIE METHOD SHALL HAVE MINIMUM ULTIMATE STRENGTH OF 1,000 PSI GRATER THAN REQUIRED UNDER "CONCRETE BACKFILL" BELOW.

CONCRETE BACKFILL

CONCRETE BACKFILL SHALL HAVE A MINIMUM ULTIMATE COMPRESSIVE STRENGTH AT 28 DAYS OF 3,000 PSI. SPECIAL INSPECTION OF CONCRETE IS NOT REQUIRED. (3,000 PSI CONCRETE IS SPECIFIED FOR EARLY POLE ERECTION, NOT FOR STRUCTURAL DESIGN PURPOSES)

CONCRETE BACKFILL SHALL ATTAIN A MINIMUM STRENGTH OF 2000 PSI PRIOR TO STEEL POLE ERECTION.

USE TYPE II PORTLAND CEMENT OR AS RECOMMENDED BY THE GEOTECHNICAL ENGINEER.

MIX IN CONFORMANCE WITH ASTM C-94.

AGGREGATES PER ASTM C-33. (1" MAX. AGG. SIZE)

PLACE CONCRETE IMMEDIATELY AFTER COMPLETION OF EXCAVATION AND INSPECTION BY THE GEOTECHNICAL ENGINEER, NO EXCAVATIONS SHALL BE LEFT UNPROTECTED OR OPEN OVERNIGHT.

CONCRETE SHALL BE PLACED IN ONE CONTINUOUS OPERATION (NO CONSTRUCTION JOINT) WITH SPECIAL EQUIPMENT WITH A MAXIMUM FREEFALL OF 5 FT AND TO PREVENT CONCRETE FROM STRIKING THE SIDES OF THE EXCAVATION. VIBRATE TOP 5 FT.

MISCELLANEOUS

FIXTURES MUST BE LOCATED TO MAINTAIN 10'-0" MINIMUM HORIZONTAL CLEARANCE FROM ANY OBSTRUCTION.

POLES, FIXTURES, PRECAST BASES, ELECTRICAL ITEMS, PLATFORMS, SPECIFICATIONS, AND INSTALLATION PER MUSCO LIGHTING, INC.

FIXTURE: EPA = 2.4 MAX. SQ FT; WEIGHT=40 LBS (PER MUSCO LIGHTING, INC.)

DATE: 12/09/05 | SHEET C1 OF 1

R.L. FOLEY & ASSOCIATES, INC.
STRUCTURAL ENGINEERS
25652 ASHBY WAY
LAKE FOREST, CALIFORNIA 92630

MUSCO LIGHTING, INC.
2107 STEWART ROAD
MUSCOTINE, IOWA 52761

POLE SUPPORT FOUNDATION
REID PARK SOFTBALL/SOCCER FIELD LIGHTING
RIVERSIDE, CA

BALLFIELD POLE FOOTING STRUCTURAL DETAIL (A)
N.T.S.

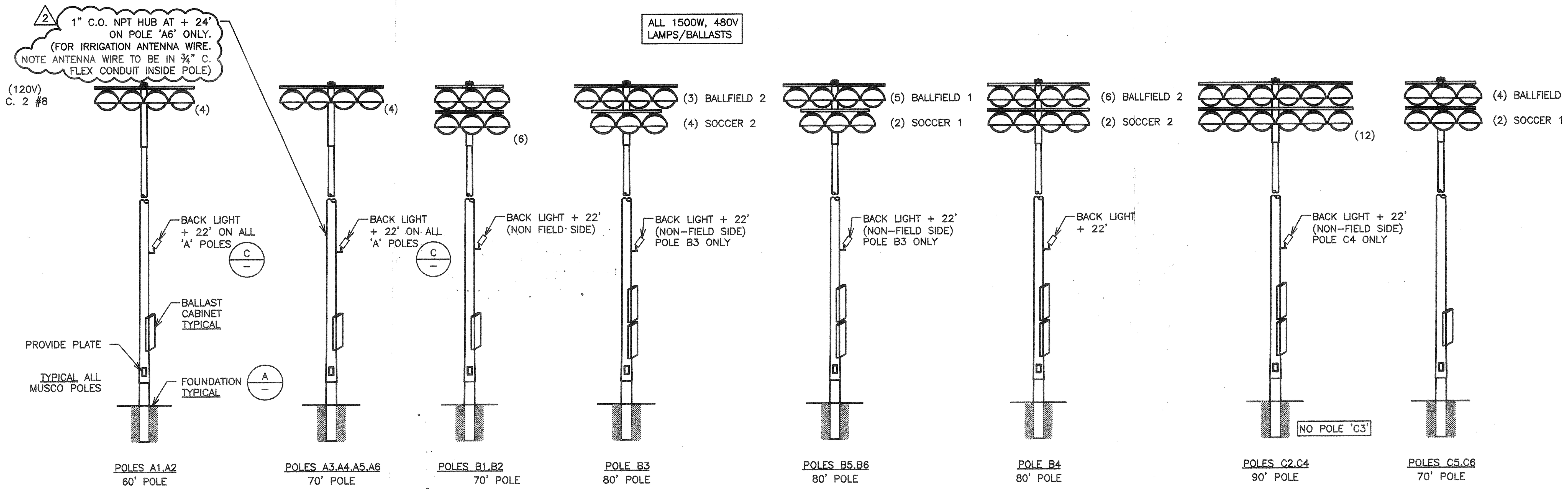

BALLFIELD POLE CONFIGURATION (D)
N.T.S.

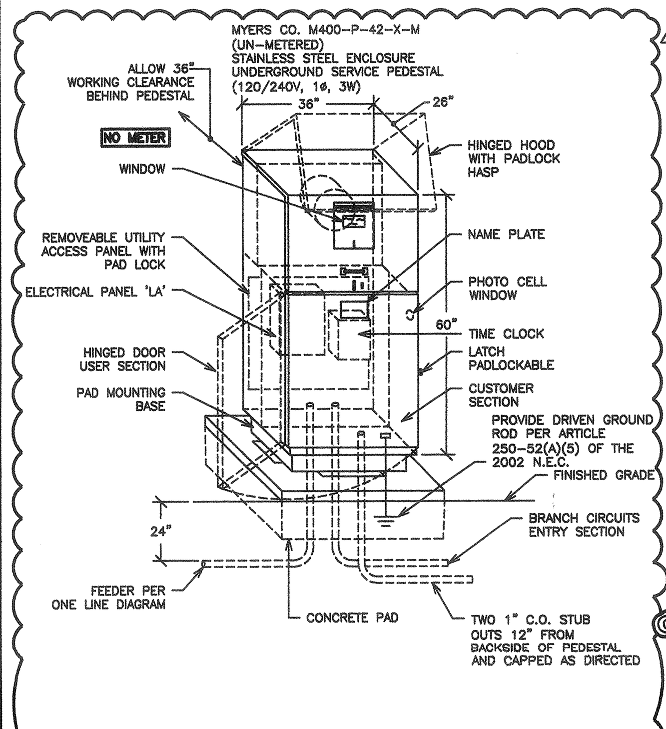

CABINET 'LA' (H)
N.T.S.

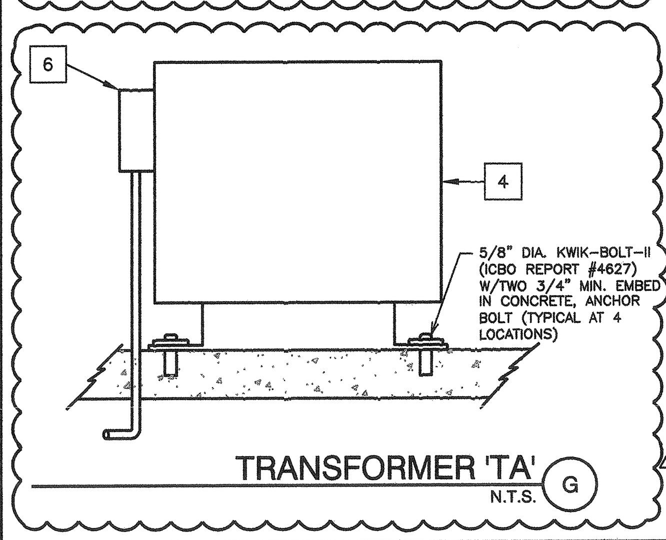

TRANSFORMER 'TA' (G)
N.T.S.

MOUNTED IN 'MSD'

PANEL: 'HB'
DATE: 07/18/06 TIME: 10:31:55
JOB: 1944
PANEL VOLTAGE: 480/277 3ϕ 4 W
BUS: 400A
MAINS: MLO
AIC RATING: 14,000
CIRCUIT CODE: blank or N : NON-CONTINUOUS
L : LONG-CONTINUOUS
R : DEMANDABLE RECEPTACLES
K : KITCHEN NO. OF EQUIPMENT: 0

CKT NO	CODE	TRIP	POLE	DESCRIPTION	(NOTE)	M	R	L	ϕA	ϕB	ϕC	ABC	ϕA	ϕB	ϕC	L	R	M	(NOTE)	DESCRIPTION	TRIP	POLE	CODE	CKT NO
1	L	30	1	WALKWAY	A			15	4500				5520			12			B	BASKETBALL CT 1	40		L	2
3	L	30	1	PARKING EAST	A			14		4340				1840		4				BASKETBALL CT 2		2	L	4
5	L	20	1	PARKING WEST	A			4			1240				5520	12			B	BASKETBALL CT 3	40		L	6
7	L	20	1	PLAYGROUND	A			3	2700				1840			4				BASKETBALL CT 4		2	L	8
9	L	20	1	SHELTERS (2)	A			4		400										SPARE	20	1		10
11		20	1	SPARE																SPARE	20	1		12
13		20	1	SPARE									1650						A	B6 SOCCER 2	20		L	14
15		20	1	SPARE										1650						–		2	L	16
17	L	20		A5 3	A			2			2475				2475	3			A	C5 4	20		L	18
19	L			–				2	1650				2475			3				–			L	20
21	L		3	–				2		1650				1650		2				–		3	L	22
23	L	20		A6 3	A			2			1050				2475	3			A	C6 4	20		L	24
25	L			–				2	1650				2475			3				–			L	26
27	L		3	–				2		1650				1650		2				–		3	L	28
29	L	20		B5 5	A			3			2475				1650				A	B5 SOCCER 2	20		L	30
31	L			–				4	3300				1650							–		2	L	32
33	L		3	–				3		2475				1650					A	C5 SOCCER 2	20		L	34
35	L	20		B6 5	A			3			2475				1650					–		2	L	36
37	L			–				4	3300				1650						A	C6 SOCCER 2	20		L	38
39	L		3	–				3		2475				1650						–		2	L	40
41	L	20	1	BACKLIGHT	A			2			500													42

PANEL NOTES: PHASE TOTALS ϕA: 34360 ϕB: 23080 ϕC: 23985

TOTAL CONNECTED VA	81425
CONNECTED VA (CODE N)	0
CONNECTED VA (CODE L)	81425
CONNECTED VA (CODE R)	0
CONNECTED VA (CODE K)	0
PANEL CONNECTED KVA	81.4
PANEL DEMAND KVA	101.8
PANEL DEMAND AMPS	122.4
HIGH ϕ AMPS W/LCL	155.1

(A) CIRCUIT CONTROLLED THRU MUSCO CONTROL-LINKS CONTACTOR.
(B) BASKET BALL CONTROLLED BY ONE MUSCO CONTROL-LINKS CONTACTOR AND BY T AND C LOCAL ON-OFF SYSTEM PER DETAIL 'D', E-2
(C) HB, 41 AND HA, 32 (BACK LIGHTS) TO CONNECT TO ONE MUSCO CONTACTOR ZONE.

MOUNTED IN 'MSD'

PANEL: 'HA'
DATE: 12/05/05 TIME: 12:48:45
JOB: 1944
PANEL VOLTAGE: 480/277 3ϕ 4 W
BUS: 400A
MAINS: MLO
AIC RATING: 14,000
CIRCUIT CODE: blank or N : NON-CONTINUOUS
L : LONG-CONTINUOUS
R : DEMANDABLE RECEPTACLES
K : KITCHEN NO. OF EQUIPMENT: 0

CKT NO	CODE	TRIP	POLE	DESCRIPTION	(NOTE)	M	R	L	ϕA	ϕB	ϕC	ABC	ϕA	ϕB	ϕC	L	R	M	(NOTE)	DESCRIPTION	TRIP	POLE	CODE	CKT NO
1	L	20		A1 3	A			2	1650				3300			4			A	B4 6	30		L	2
3	L			–				2		1650				3300		4				–			L	4
5	L		3	–				2			1650				3300	4				–		3	L	6
7	L	20		A2 3	A			2	1650				6600			8			A	C2 12	40		L	8
9	L			–				2		1650				6600		8				–			L	10
11	L		3	–				2			1650				6600	8				–		3	L	12
13	L	20		A3 3	A			2	1650				4950			4			A	C4 9	30		L	14
15	L			–				2		1650				4950		4				–			L	16
17	L		3	–				2			1650				4950	4				–		3	L	18
19	L	20		A4 3	A			2	1650				4125			5			A	C2 8	30		L	20
21	L			–				2		1650				4950		6				–			L	22
23	L		3	–				2			1650				4125	5				–		3	L	24
25	L	30		B1 6	A			4	3300				6600			8			A	C4 12	40		L	26
27	L			–				4		3300				6600		8				–			L	28
29	L		3	–				4			3300				6600	8				–		3	L	30
31	L	30		B2 6	A			4	3300				2700			9			A	BACKLIGHT	20	1	L	32
33	L			–				4		3300				3300					A	B3 SOCCER 4	20		L	34
35	L		3	–				4			3300				3300					–		2	L	36
37	L	30		B3 6	A			5	4125				1650						A	B4 SOCCER 2	20		L	38
39	L			–				5		4125				1650						–		2	L	40
41	L		3	–				4			3300													42

PANEL NOTES: PHASE TOTALS ϕA: 47250 ϕB: 48675 ϕC: 45375

TOTAL CONNECTED VA	141300
CONNECTED VA (CODE N)	0
CONNECTED VA (CODE L)	141300
CONNECTED VA (CODE R)	0
CONNECTED VA (CODE K)	0
PANEL CONNECTED KVA	141.3
PANEL DEMAND KVA	176.6
PANEL DEMAND AMPS	212.5
HIGH ϕ AMPS W/LCL	219.7

(A) CIRCUIT CONTROLLED THRU MUSCO CONTROL-LINKS CONTACTOR.

PANEL: 'LA'
DATE: 01/25/06 TIME: 08:31:43
JOB: 1944
PANEL VOLTAGE: 240/120 1ϕ 3 W
BUS: 400A
MAINS: 400A/2P
MOUNTING: SURFACE
CIRCUIT CODE: blank or N : NON-CONTINUOUS
L : LONG-CONTINUOUS
R : DEMANDABLE RECEPTACLES
K : KITCHEN NO. OF EQUIPMENT: 0

CKT NO	CODE	TRIP	POLE	DESCRIPTION	(NOTE)	M	R	L	ϕA	ϕB	AB	ϕA	ϕB	L	R	M	(NOTE)	DESCRIPTION	TRIP	POLE	CODE	CKT NO
1		20	1	SHELTERS (2)			2	4	700												L	2
3		20	1	OB1			2			500												4
5		20	1	OB2			2		500													6
7		20	1	OB3			2			500												8
9		20	1	CONTROL – BB CT'S	1				500													10
11		20	1	CONTROL – MUSCO	1					1500												12
13		20	1	SPARE	1				1500													14
15		20	1	SPARE	1					1500												16
17		20	1	SPARE	1				1500													18
19		20	1	SPARE	1					1500												20
21		20	1	IRRIG.		2			100													22
23		20	1	SHELTER			2			140												24
25		20	1	SPARE																		26
27		20	1	SPARE									180			2		IRRIG. CONT.	20	1		28
29		20	1	SPARE								180				1		TEL.	20	1		30
31		20	1	SPARE																		32
33												9500						CABINET 'CA'	100			34
35													9500					–		2		36
37												9500						CABINET 'CB'	100			38
39		100		RESTROOM						4500			9500					–		2		40
41			2	–					4500													42

PANEL NOTES: PHASE TOTALS ϕA: 33800 ϕB: 33020

TOTAL CONNECTED VA	66820
CONNECTED VA (CODE N)	64200
CONNECTED VA (CODE L)	2620
CONNECTED VA (CODE R)	0
CONNECTED VA (CODE K)	0
PANEL CONNECTED KVA	66.8
PANEL DEMAND KVA	67.5
PANEL DEMAND AMPS	281.1
HIGH ϕ AMPS W/LCL	285.9

SPECIAL NOTES

A. ALL PANEL SCHEDULES TO MATCH EXACT FIELD INSTALLATION (AS-BUILT) CONDITIONS AND PLANS. PROVIDE "CORRECT" PANEL SCHEDULE INSIDE PANEL WITH CORRECT CIRCUITS, ELECTRICAL LOADS AND FEEDER SIZE AND WIRE TYPE TO PANEL. (ie: FEEDER= NO. 3/0 COPPER, THHN).

B. ALL PLUG-IN OUTLET DEVICES WITH GROUND OUTLET SHALL HAVE GROUND CONNECTION AT TOP OF DEVICE + 15" TO CENTER TO TOP OUTLET.

C. CONTRACTOR SHALL NOT INSTALL MORE WIRES IN A CONDUIT THAN SHOWN ON PLANS. NUMBER OF WIRES IN A CONDUIT ARE BASED ON DERATING VALUES IN NATIONAL ELECTRICAL CODE. IF CONTRACTOR ELIMINATES VARIOUS CONDUITS SHOWN ON PLANS AND INSTALLS ADDITIONAL WIRES IN A CONDUIT, WITHOUT PRIOR APPROVAL, THE WIRING WILL BE CORRECTED AT CONTRACTOR COST.

D. ALL OVERCURRENT PROTECTION DEVICES (CIRCUIT BREAKERS, SWITCHES) SHALL BE U.L. LISTED FOR 75° C. TERMINATIONS. ALL WIRE RATING AMPACITIES BASED ON 75° C. (THHN/THWN) COPPER. NO ALUMINUM WIRE ALLOWED.

E. ALL BRANCH CIRCUIT JUNCTION BOXES TO COMPLY WITH THE 1999 NEC 370-16 FOR SIZE RELATED TO NUMBER OF WIRES INSIDE THE JUNCTION BOX.

F. CONTRACTOR SHALL SEND SWITCHBOARD SHOP DRAWING TO POWER CO. REPRESENTATIVE FOR APPROVAL BY POWER CO. AND CONFIRMATION THAT SWITCH GEAR COMPLIES WITH POWER CO. REGULATIONS.

G. ALL CIRCUIT BREAKER TO BE 'BOLT ON' TYPE.

H. CONTRACTOR SHALL OBTAIN FROM ELECTRICAL ENGINEER ELECTRICAL FILE (AUTO-CAD) OF ELECTRICAL PLANS AND PROVIDE 'AS-BUILT' ELECTRICAL FILES TO OWNER AND ENGINEER INDICATING ALL AS-BUILT REVISIONS FILES WITH ALL CHANGES/ADDITIONS CLEARLY SHOWN. PLANS TO BE NOTED IN LOWER RIGHT CORNER OF EACH SHEET: "AS-BUILT PLANS" (WITH DATE AND CONTRACTORS NAME, ADDRESS, PHONE NO. AND SIGNED). NO EXCEPTIONS.

MAIN SWITCHBOARD 'MSD' NOTES:

A. SERIES RATED SYSTEM:

1. THE ENTIRE MAIN SWITCHBOARD AND ELECTRICAL PANEL SYSTEM SHALL BE UL LISTED FOR SERIES RATING OF 50,000A RMS SYMM WHEN USED WITH DOWN STREAM SERIES RATED CIRCUIT BREAKERS AND, OR DEVICES.

2. SERIES CONNECTED SYSTEM HAS BEEN SPECIFIED FOR THE TYPE OF FUSE-CIRCUIT BREAKER AND CIRCUIT BREAKER-CIRCUIT BREAKER COMBINATION. THE ELECTRICAL CONTRACTOR SHALL SUBMIT TO ELECTRICAL ENGINEER A COPY OF DOCUMENTATION FROM SWITCH GEAR MANUFACTURER, THAT CONTRACTOR PROPOSES TO USE, AND DEMONSTRATE/DOCUMENT, THE COMPLIANCE OF THEIR SUBMITTED COMBINATION. THE EQUIPMENT ENCLOSURE SHALL BE LEGIBLY MARKED ON THE FIELD TO INDICATE THE EQUIPMENT HAS BEEN APPLIED WITH A SERIES COMBINATION RATING. THE MARKING SHALL BE READILY VISIBLE AND STATE "CAUTION-SERIES RATED SYSTEM" PER N.E.C. ARTICLE 110-22. 42,000A. AVAILABLE IDENTIFIED REPLACEMENT COMPONENT REQUIRED. IF PROPOSED OCP DEVICE TYPE IS DIFFERENT THAN SPECIFIED ON PLANS, CONTRACTOR SHALL RESUBMIT SUBSTITUTED OCP DEVICE CATALOG NUMBER TO BUILDING DEPARTMENT AS A CHANGE TO CONSTRUCTION DRAWINGS.

3. PROVIDE RED ENGRAVED PLATE WITH WHITE LETTERS: "SWITCHBOARD IS SERIES RATED. REPLACEMENT DEVICES SHALL BE OF SAME MANUFACTURER, TYPE DESIGNATION AND AN EQUAL OR GREATER INTERRUPTING CAPACITY."

B. COPPER BUSSING SHALL BE 1000A/SQ. INCH FOR 100% RATING. ALUMINUM BUSSING SHALL BE 750A/SQ. INCH FOR 100% RATING.

C. ALL SECTIONS OF SWITCHBOARD (HORIZONTAL AND VERTICAL) TO BE FULLY BUSSED FOR FUTURE ADDITIONS.

D. ENTIRE EXTERIOR CABINET SWITCHBOARD TO BE STAINLESS STEEL.

E. SWITCHBOARD IS FREE STANDING OUTDOOR UNIT. BOLT TO CONCRETE SLAB WITH 1/2" ø PHILLIPS RED HEAD WEDGE ANCHORS 4" EMBEDMENT. CAT. NO. WS-1252 (4) BOLTS PER UNIT (2 AT EACH END). SEE DETAIL 'E', SHT. E-6.

F. CONTRACTOR SHALL SEND SWITCHBOARD SHOP DRAWING TO RIVERSIDE POWER CO. REPRESENTATIVE FOR APPROVAL BY POWER CO. AND CONFIRMATION THAT SWITCH GEAR COMPLIES WITH POWER CO. REGULATIONS.

G. ALL DIMENSIONS OF SWITCH GEAR ARE BASED ON RSE-SIERRA (714/529-3471). CONTRACTOR IS RESPONSIBLE FOR ANY SUBSTITUTION OF EQUIPMENT WITH GREATER DIMENSIONS THAN MANUFACTURED BY RSE-SIERRA AND FOR ALLOWED SPACE AND CODE CLEARANCES.

H. THE LANDING LUGS IN THE UNDERGROUND PULL SECTION, SIZED PER MAIN SWITCH, ON SERVICE SECTION CONNECTED LOAD. DISCONNECT LINKS FROM LANDING LUGS THE UNDERGROUND PULL SECTION TO EACH SERVICE SECTION BUS PER UTILITY COMPANY SERVICE GUIDE (U.C.S.G.).

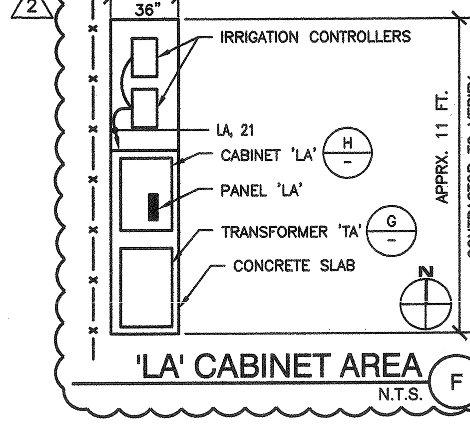

'LA' CABINET AREA (F)
N.T.S.

REEDCORP ENGINEERING
CONSULTING ELECTRICAL ENGINEERS
2061 Business Center Drive, Suite 110
Irvine, CA 92612
(949) 752-1278 FAX: (949) 752-1287
E-MAIL : ee@reedcorp.net
04-216-1944

RHA LANDSCAPE ARCHITECTS PLANNERS, INC.
3612 MISSION INN AVE
RIVERSIDE, CALIFORNIA 92501
LIC. #1512
PH. (909) 781-1930
FAX (909) 686-8091

© R H A Landscape Architects -Planners, Inc. expressly reserves its common law copyright and other property rights in these plans. These plans are not to be reproduced, changed or copied in any form or manner whatsoever nor are they to be assigned to any third party without first obtaining the express written permission.

CLIENT:
THE CITY OF RIVERSIDE
PARK AND RECREATION DEPT.
3900 Main Street
Riverside, California 92522

PROJECT:
Reid Park
Expansion
Community Park
Orange St. and Garner Rd.

REVISIONS	DATE	BY
1 MISC.	1/26/06	RR
2 MISC.	7/18/06	RR

REGISTERED PROFESSIONAL ENGINEER THOMAS E. HARTMAN No. 7531 Exp: 9/30/06 ELECTRICAL STATE OF CALIFORNIA

SHEET TITLE
MUSCO DETAILS AND ELECTRICAL DETAILS

DESIGNED	MR
DRAWN	MR
CHECKED	RR
DATE	01-17-06
SCALE	AS NOTED
JOB NO.	

SHEET
E-4
OF 6 SHEETS

[One Inch on Original Sheet] Drawing File: \\reedcorp\cad drawings\SDSKPROJ\1944\Reid Park\Sheets\ E-4 Musco Electrical Details Aug 09, 2006 - 1:41pm

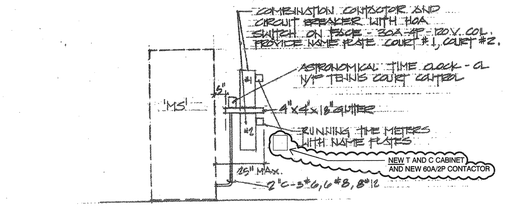

EXIST 'MS' & NEW CONTROLS ELEVATION (A)
N.T.S.

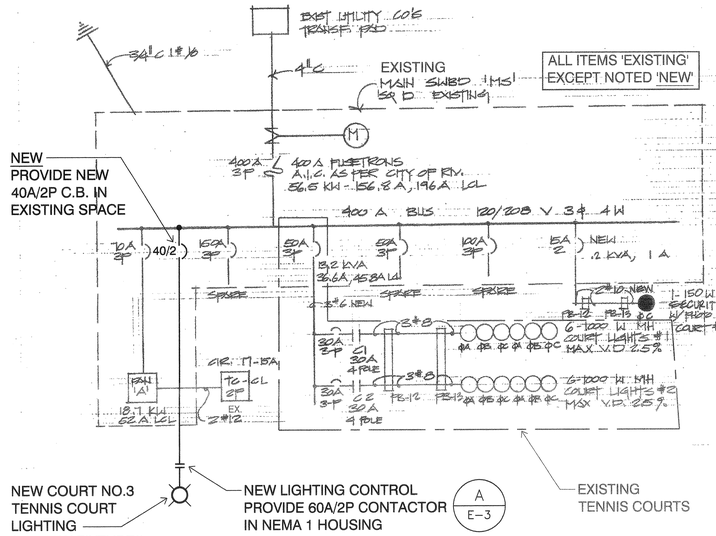

EXISTING ONE LINE DIAGRAM - "MS" (B)
N.T.S.

SYMBOL LIST (EXISTING)

- UNDERGROUND PVC RIGID CONDUIT 30" BELOW GRADE W/ YELLOW PLASTIC TAPE 12" ABOVE CONDUIT.
- PB UNDERGROUND PULL BOX (S / E-)
- EXISTING 120/208 V. MAIN SWITCH BOARD
- EXISTING CONTROLS FOR TENNIS COURTS
- TC1 25' ROUND GALV. STEEL POLE WITH 1-1000 W TENNIS COURT METAL HALIDE FIXTURE (208V) (D / E-5)
- TC2 25' ROUND GALV. STEEL POLE WITH 2-1000 W TENNIS COURT METAL HALIDE FIXTURES (208V) (E / E-5)
- WATER PROOF PUSHBUTTON ON TENNIS COURT POLE (ONE PUSHBUTTON PER EACH COURT)
- 1-150 W HIGH PRESSURE SODIUM FIXTURE (208V) W/ PHOTO CONTROL ON SEPARATE CIR. FOR SECURITY LIGHT
- RGS RIGID GALVANIZED STEEL CONDUIT.

NOTES (EXISTING SYSTEM)

1. EXISTING 2" CONDUIT STUB OUT AND EXTENDED INTO NEW PULL BOX. 9 #8, 2#10, 9 #12 & #8 GND. (EXISTING).
2. EXISTING 1½" C., 6#8, 2#10 SECURITY, 6#12 CONTROL & #8 GND. (16)
3. EXISTING 1" C., 3#8, AND #8 GND. UNDERGROUND.
4. EXISTING ¾" C., 2#8, #8 GND. UNDERGROUND.
5. EXISTING 1" C., 4#8, #8 GND. UNDERGROUND. (16)
6. EXISTING 1¼ C, 6#8, #8 GND UNDERGROUND. (16)
7. DETERMINE LOCATION OF SPRINKLER HEADS AND PLACE PULL BOX TO MISS SPRINKLERS AND PIPE.
8. JACK OR BORE CONDUIT UNDER WALK.
9. WELD ¼" GALV. STEEL PLATE 10"x4" TO POLE TC3 FOR WATER PROOF PUSH BUTTONS. INSTALL PUSH BUTTONS ONE EACH SIDE OF POLE. INSTALL 3/4" BUSHED COUPLING ON EACH SIDE OF POLE IN CENTER OF PLATE - SECURE PUSH BUTTON WITH 4 BOLTS. TAG PLATE FOR BOLTS USE STAINLESS STEEL BOLTS. PUSHBUTTONS SHALL BE IN CAST BOX WITH TAMPER PROOF BOLTS SECURING CAST COVER TO CAST BOX.
10. EXISTING 1½" C.O. WITH PULL LINE UNDERGROUND.
11. 1" C.O. STUB OUT 5' BEYOND WALKWAY AND CAP FOR FUTURE COURT #3.
12. EXISTING 1½" C. 3#8, #8 GND & PULL LINE UNDERGROUND.
13. EXISTING 1" C 2#8, #8 GND & PULL LINE. UNDERGROUND
14. TACKWELD AFTER FINAL TORQUE ON NUTS.
15. TACKWELD SHUT AFTER FINAL INSPECTION BY P/R

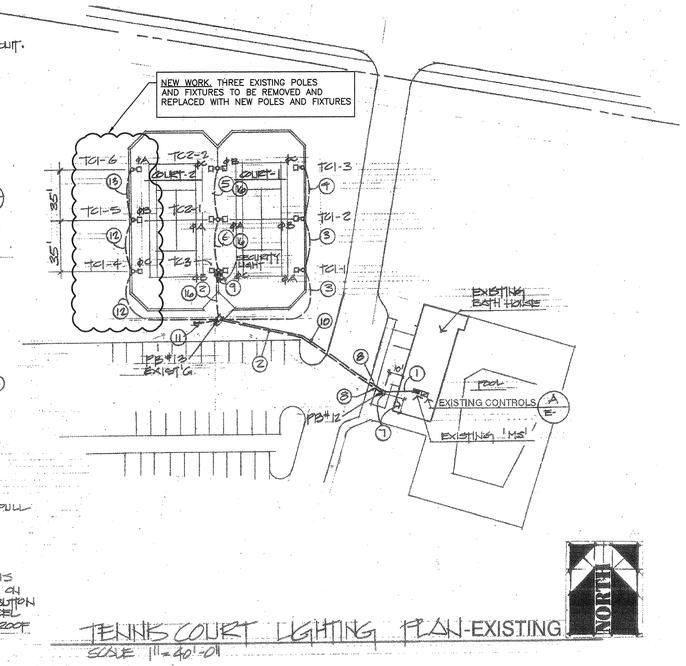

TENNIS COURT LIGHTING PLAN-EXISTING
SCALE 1"=40'-0"

REFERENCE NOTES: (EXISTING)

1. TENNIS COURT FIXTURES ARE 1000 WATT METAL HALIDE, 208 VOLT HPF BALLAST, SPAULDING CAT. NO. CET-1000-M-208-DB.
2. SECURITY FIXTURE IS TENNIS COURT FIXTURE EXCEPT 150 WATT H.P.S. WITH BUILT-IN PHOTO CONTROL, SPAULDING CAT. NO. CET-150-HPS-208-DB-PC

NEW
T AND C SYSTEM OPERATION AND SPECIFICATIONS: (FOR NEW COURT NO. 3 ONLY)

A. CONTROL PANEL WITH:
1. 24 HOUR TIME CLOCK TO DETERMINE WHEN THE SYSTEM WILL BE IN OPERATION. SET HOURS PER CITY REQUIREMENTS.
2. (1) ONE HOUR TIMERS TO DETERMINE THE LENGTH OF TIME THE LIGHTS WILL BE ON. EACH TIME THE OPERATOR PRESSES THE TC 1001 PUSH BUTTON "ON" THE TIME WILL BE RESET TO ONE HOUR. BUZZER SOUNDS A ONE MINUTE WARNING BE RESET TO ONE HOUR. BUZZER SOUNDS A ONE MINUTE WARNING BEFORE THE LIGHTS ARE TO GO OUT. (THE BUZZER SHALL HAVE A VOLUME CONTROL.)
3. CONTROL RELAYS TO DE-ENERGIZE THE LIGHTING CONTACTORS WHEN THE 24 HOUR TIMER SHUTS DOWN THE SYSTEM. THIS ALLOWS THE ONE HOUR TIMER TO COMPLETE ITS CYCLE READY TO START OPERATION THE NEXT DAY WITHIN TIME CLOCK SETTING.
4. TERMINAL BLOCKS FOR ELECTRICAL CONTACTORS TO HOOK-UP.
   THE TC 1000-* TO BE MOUNTED ON PANELS ONLY AS FOLLOWS:
   - ☒ TC 1000-4 ON A HOFFMAN PANEL A24P24(21X21) - (BACKBOARD ONLY)
   - ☐ TC 1000-8 ON A HOFFMAN PANEL A24P24(33X21) - (BACKBOARD ONLY)
   - ☐ TC 1000-12 ON A HOFFMAN PANEL A24P24(45X21) - (BACKBOAD ONLY)
5. PANEL ENCLOSURE:
   - ☒ MOUNT T AND C PANEL IN NEMA 1 ENCLOSURE WITH PAD LOCKABLE DOOR VERIFY EXACT SIZE REQUIRED.

B. EXTERNAL DEVICES
1. THE TC 1001 IS THE "ON-OFF" PUSH BUTTON STATION TO MOUNT ON POLE.
2. THE TC 1002 IS THE WARNING HORN AND PILOT LIGHT. THE HORN WILL SOUND AND THE PILOT LIGHT WILL LIGHT APPROXIMATELY ONE MINUTE BEFORE THE ONE HOUR TIMER (COURT LIGHTS) ARE ABOUT TO TIME OUT. THE HORN WILL SOUND ONLY FOR THE TIME SET ON THE TIME DELAY IN THE CONTROL CABINET. MOUNT ON POLE.
3. ONE TC 1001 AND ONE TC 1002 ARE REQUIRED FOR EACH COURT.

C. T AND C INDUSTRIES
1121 NORTH CEDAR STREET
GLENDALE, CA 91207
818/240-3600
FAX: 818/547-9359

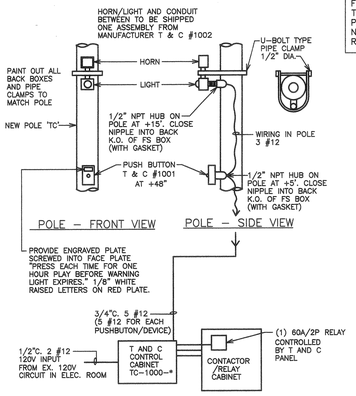

'NEW' T AND C CONTROL (NEW TENNIS COURT NO. 3) (C)
N.T.S.

NOTE: NEW TENNIS COURT NO. 3 TO BE ON A SEPARATE LIGHTING CONTROL THAN EXISTING COURTS 1 AND 2

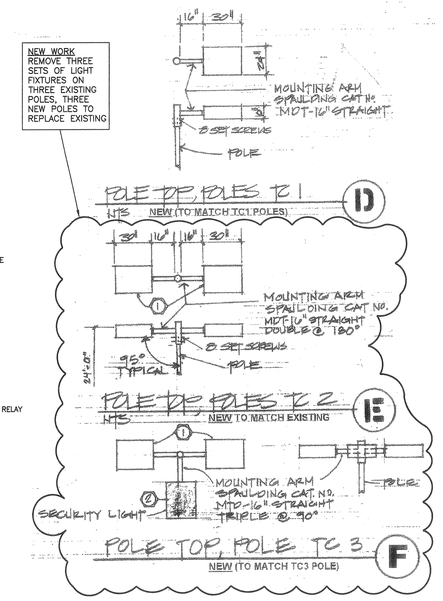

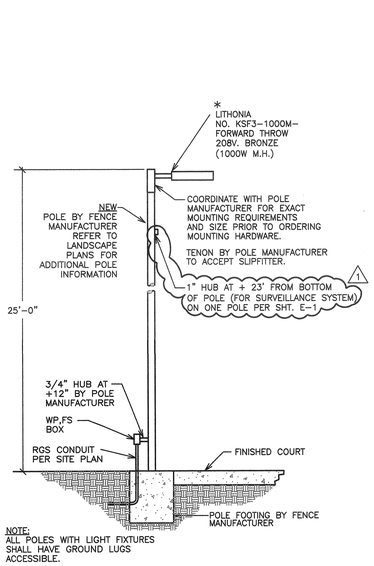

NOTE:
ALL POLES WITH LIGHT FIXTURES SHALL HAVE GROUND LUGS ACCESSIBLE.

LIGHT STANDARD 'TB'

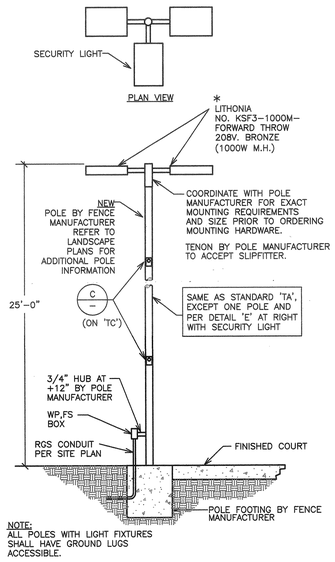

NOTE:
ALL POLES WITH LIGHT FIXTURES SHALL HAVE GROUND LUGS ACCESSIBLE.

LIGHT STANDARD 'TC'

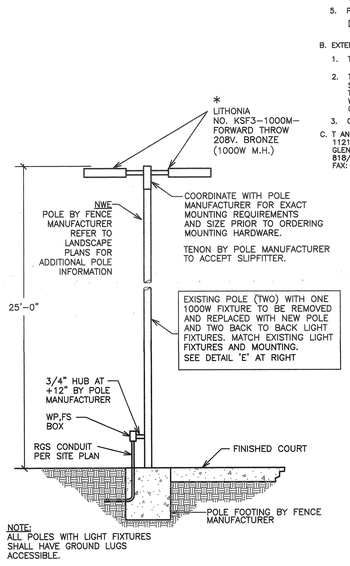

NOTE:
ALL POLES WITH LIGHT FIXTURES SHALL HAVE GROUND LUGS ACCESSIBLE.

LIGHT STANDARD 'TA'

NEW TENNIS COURT POLES/FIXTURES 'TA', 'TB', AND 'TC' (G)
N.T.S.

* LITHONIA IS EQUAL EXCEPT ALL NEW FIXTURES AND MOUNTING TO MATCH EXISTING

NOTE:
ALL ITEMS SHOWN ON THIS SITE PLAN SHEET ARE EXISTING EXCEPT NOTED AS 'NEW'. THIS SHEET IS A COPY OF 12/26/95 CITY PLANS AND FOR CLARIFICATION

REEDCORP ENGINEERING
CONSULTING ELECTRICAL ENGINEERS
2061 Business Center Drive, Suite 110
Irvine, CA 92612
(949) 752-1278 FAX: (949) 752-1287
E-MAIL : ee@reedcorp.net
04-216-1944

RHA
LANDSCAPE ARCHITECTS PLANNERS, INC.
3612 MISSION INN AVE
RIVERSIDE, CALIFORNIA 92501
LIC. #1512
PH. (909) 781-1930
FAX (909) 686-8091

© R.H.A Landscape Architects - Planners, Inc. expressly reserves its common law copyright and other property rights in these plans, assigned to any third party without first obtaining the express written permission. These plans are not to be reproduced, changed or copied in any form or manner whatsoever nor are they to be

CLIENT:
THE CITY OF RIVERSIDE
PARK AND RECREATION DEPT.
3900 Main Street
Riverside, California 92522

PROJECT:
Reid Park Expansion
Community Park
Orange St. and Garner Rd.

REVISIONS	DATE	BY
1 MISC.	1/26/06	RR

REGISTERED PROFESSIONAL ENGINEER THOMAS E. HARTMAN No. 7531 Exp: 9/30/06 ELECTRICAL STATE OF CALIFORNIA

SHEET TITLE
TENNIS COURT ELECTRICAL PLAN

DESIGNED	MR
DRAWN	MR
CHECKED	RR
DATE	01-17-06
SCALE	AS NOTED
JOB NO.	

SHEET
E-5
OF 6 SHEETS

ATTACHMENT FIVE ADDENDUM THREE, 2/8/06

\\REEDCORP\Cad Drawings\SDSRPROJ\1944\Reid Park\Sheets\E-5 Ex. Tennis Court Lighting.dwg, E-5 Building, 1/30/2006 9:11:53 AM, marioh, HP Designjet 1050C by HP E1.pc3, reedcorp Engineering, Inc., Reedcorp Engineering, Inc.
[One Inch on Original Sheet] Drawing File: \REEDCORP\Cad Drawings\SDSRPROJ\1944\Reid Park\Sheets\E-5 Ex. Tennis Court Lighting Jan 30, 2006 - 9:11am

BALLFIELD LIGHTING GENERAL NOTES– EXISTING SITE

A. SECURE EXISTING PLANS FROM CITY (ELECTRICAL, AND THE UTILITIES, IRRIGATION, ETC.) AVOID EXISTING UNDERGROUND ELECTRICAL AND SPRINKLER SYSTEMS WHERE POSSIBLE. REPAIR ALL EXISTING SYSTEMS DAMAGED BY CONSTRUCTION TO CITY'S REQUIREMENT.

B. STAKE OUT EXACT LOCATION OF POLES AND CONDUIT ROUTING WITH CITY PRIOR TO ANY WORK. ANY LOCATION NOT WITHIN 24" OF LOCATION SHOWN ON PLAN SHALL BE NOTIFIED TO ENGINEER AND LIGHTING MANUFACTURER IMMEDIATELY AND PRIOR TO CONSTRUCTION. CITY TO ACCEPT LOCATIONS OF POLES AFTER CITY SITE REVIEW OF POLE LOCATIONS.

C. CONTRACTOR SHALL CAREFULLY REMOVE, STORE, AND REPLACE EXISTING SOD AFTER INSTALLATION IS COMPLETE. ANY EXISTING IRRIGATION PIPING OR OTHER UTILITIES WHICH ARE DAMAGED OR REQUIRE RELOCATION DURING CONSTRUCTION SHALL BE REPLACED TO THE SATISFACTION OF THE CITY.

D. TRENCHING NOTES:
   1) TRENCH AROUND PLAYING FIELDS AND NOT ACROSS INTO OUTFIELD PLAYING AREAS EXCEPT AS INDICATED OR UNAVOIDABLE.
   2) CONTRACTOR SHALL VERIFY WITH CITY EXACT TYPE AND WEIGHT OF CONCRETE TRUCKS TO BE USED ON ALL TURF AREAS. DO NOT USE TRUCKS WITH WEIGHT NOT APPROVED BY THE CITY.
   3) RUTS WHICH ARE MADE WITH CONCRETE TRUCKS NEED TO BE TOP DRESSED WITH SANDY LOAM SOIL MIXED WITH A MULCH AND SEEDED WITH PERENNIAL RYE GRASS (OR AS REQUIRED BY CITY).
   4) WHERE TRENCHING SOIL HAS SETTLED, IT WILL REQUIRE TOP SOIL TO BE ADDED, OVER SEEDING, AND TOP DRESSED WITH MULCH.

E. CONTRACTOR TO VISIT EXISTING SITE AND VERIFY ALL EXISTING CONDITIONS.

F. CONTRACTOR TO OBTAIN ALL PERMITS AND INSPECTIONS AS REQUIRED AT NO ADDITIONAL COST TO CITY.

G. VERIFY ALL POLE AND OUTLET LOCATIONS WITH THE CITY BEFORE COMMENCING WORK. POLE AND OUTLET LOCATIONS AND CONDUIT RUNS ARE SHOWN DIAGRAMMATICALLY AND MAY NEED TO BE CHANGED TO SUIT FIELD CONDITIONS. (VERIFY WITH CITY.) SEE NOTE "B" ABOVE.

H. ALL MATERIAL SHALL BE DELIVERED TO THE SITE NEW, IN THEIR ORIGINAL UNBROKEN PACKAGES BEARING APPROVAL BY U.L., NEMA, NBFU, OR ANY OTHER APPROPRIATE AGENCY.

I. PROVIDE TYPE WRITTEN DIRECTORY (LAMINATED AND SEALED) INSIDE EACH PANEL DOOR.

J. ALL WORK SHALL BE CONSTRUCTED IN STRICT ACCORDANCE WITH THE NATIONAL ELECTRICAL CODE (1999 EDITION), AND ALL APPLICABLE STATE, COUNTY, AND LOCAL CODES APPLYING TO THE PROPOSED CONSTRUCTION. IN THE EVENT OF A CONFLICT BETWEEN THE ABOVE AND THESE PLANS AND SPECIFICATIONS, THE RESTRICTIVE SHALL GOVERN.

K. CONTRACTOR SHALL MAINTAIN ONE SET OF "AS-BUILT" PLANS MARKED IN RED SHOWING EVERY CHANGE, ADDITION, DELETION OR MODIFICATION INCLUDING EXACT ROUTING OF CONDUITS. THIS "AS-BUILT" SET SHALL BE RETURNED TO THE CITY BEFORE FINAL ACCEPTANCE OF WORK.

L. CONTRACTOR SHALL PROVIDE A COMPLETE AND FUNCTIONING ELECTRICAL SYSTEM MEETING THE LETTER AND THE INTENT OF THESE PLANS AND SPECIFICATIONS.

M. POLES STORED ON SITE SHALL BE HANDLED (INCLUDING DELIVERY AND SETTING) WITH APPROVED STRAPS TO AVOID DAMAGE TO GALVANIZING. ACCEPT POLES FROM MANUFACTURER'S DELIVERY IN THE PRESENCE OF CITY VERIFYING ANY DAMAGE. POLES STORED SHALL NOT SET ON GRADE. SET POLES ON WOOD BASES AND TURNED 180 DEGREES EVERY 48 HOURS MINIMUM. TOUCH UP PAINTING (GALVANIZING) SHALL BE PER POLE MANUFACTURER'S REQUIREMENTS.

N. SEE ELECTRICAL SPECIFICATIONS FOR ADDITIONAL REQUIREMENTS.

RECESSED FIXTURE WALL MOUNTED

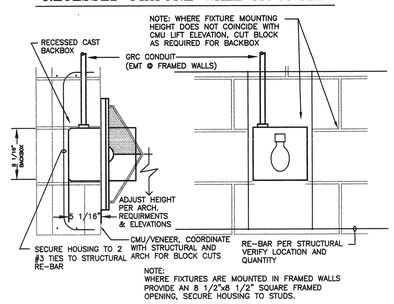

LIGHT FIXTURE 'K' MOUNTING (C)
N.T.S.

CONDUIT IN CMU WALL

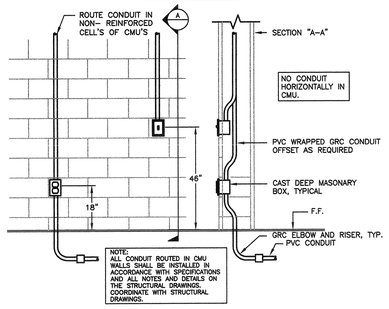

CMU WALL CONSTRUCTION (B)
N.T.S.

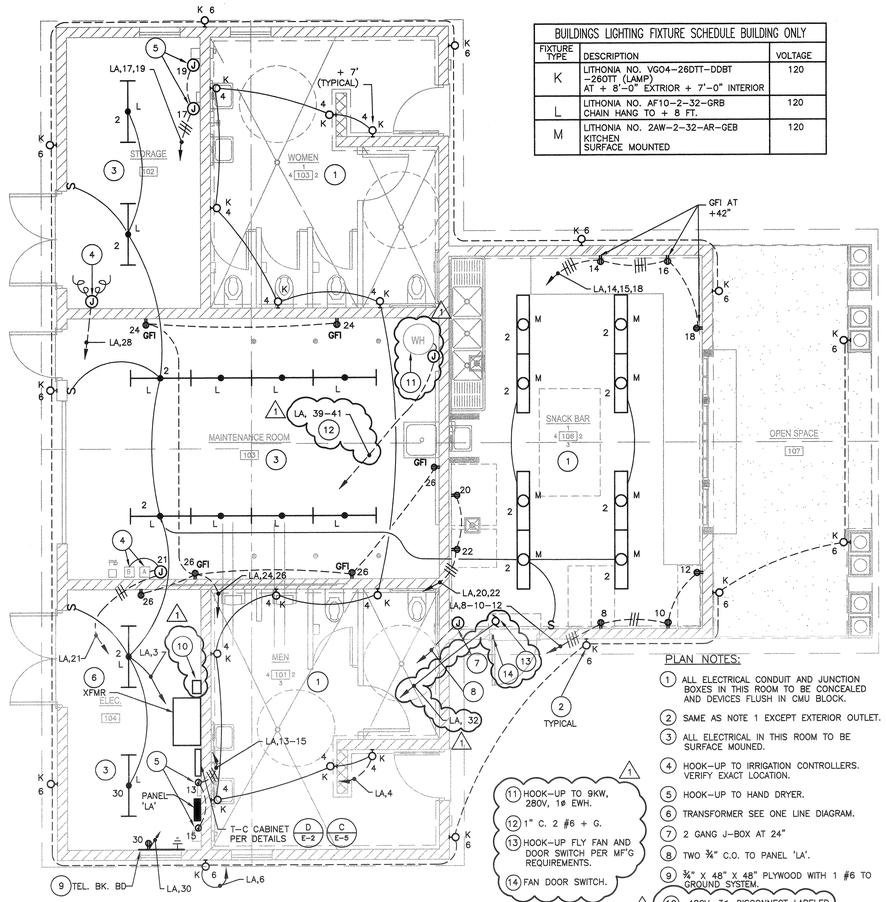

BUILDINGS LIGHTING FIXTURE SCHEDULE BUILDING ONLY		
FIXTURE TYPE	DESCRIPTION	VOLTAGE
K	LITHONIA NO. VG04-26DTT-DDBT -26OTT (LAMP) AT + 8'-0" EXTRIOR + 7'-0" INTERIOR	120
L	LITHONIA NO. AF10-2-32-GRB CHAIN HANG TO + 8 FT.	120
M	LITHONIA NO. 2AW-2-32-AR-GEB KITCHEN SURFACE MOUNTED	120

PLAN NOTES:

1. ALL ELECTRICAL CONDUIT AND JUNCTION BOXES IN THIS ROOM TO BE CONCEALED AND DEVICES FLUSH IN CMU BLOCK.
2. SAME AS NOTE 1 EXCEPT EXTERIOR OUTLET.
3. ALL ELECTRICAL IN THIS ROOM TO BE SURFACE MOUNED.
4. HOOK-UP TO IRRIGATION CONTROLLERS. VERIFY EXACT LOCATION.
5. HOOK-UP TO HAND DRYER.
6. TRANSFORMER SEE ONE LINE DIAGRAM.
7. 2 GANG J-BOX AT 24"
8. TWO ¾" C.O. TO PANEL 'LA'.
9. ¾" X 48" X 48" PLYWOOD WITH 1 #6 TO GROUND SYSTEM.
10. 480V, 3ø. DISCONNECT LABELED "BUILDING DISCONNECT"

RESTROOM AND CONCESSION BUILDING LIGHTING (A)
1/4" = 1'-0"

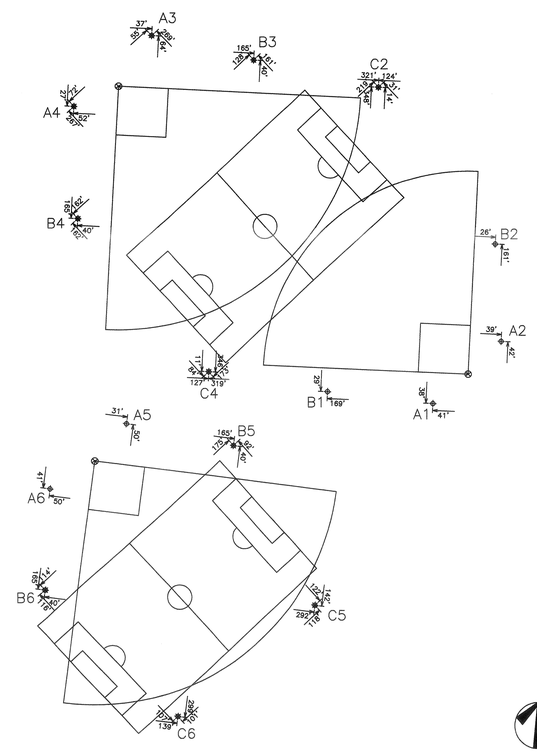

MUSCO POLE LOCATION PLAN (F)
N.T.S.

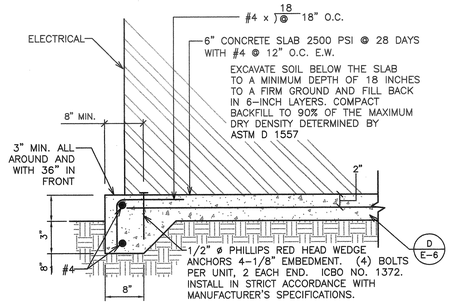

'MSD' CONCRETE PAD DETAIL (E)
N.T.S.

ZONE SCHEDULE				
			CIRCUIT DESCRIPTION	
ZONE	REC RELAY #	ZONE DESCRIPTION	POLE ID	CONT ID
Zone 1	1	Baseball 1	A5	C1
			A6	C2
Zone 2	2	Baseball Field 2	A3	C3
			A4	C4
			B3	C5
			B4	C6
Zone 3	3	Baseball Field 3	A1	C7
			A2	C8
			B1	C9
			B2	C10
Zone 4	4	Soccer 1	B5	C11
			B6	C12
			C5	C13
			C6	C14
Zone 5	5	Soccer 2	C2	C15
			C4	C16
Zone 6	6	Parking Lot East	X1	C17
Zone 7	7	Parking Lot West	X2	C18
Zone 8	8	Playground	X3	C19
Zone 9	1	Building Interior	X4	C20
Zone 10	2	Walkway Lights	X5	C21
Zone 11	3	Building Exterior Lights	X6	C22
Zone 12	4	Backlight	X7	C23

CIRCUIT SUMMARY BY POLE ID						
POLE	CIRCUIT NAME	# OF FIXT	FULL LOAD AMPS	CONTACTOR SIZE (AMPS)	CONTACTOR ID	ZONE
A1	Baseball Field 3	3	7.4	30	C7	3
A2	Baseball Field 3	3	7.4	30	C8	3
A3	Baseball Field 2	3	7.4	30	C3	2
A4	Baseball Field 2	3	7.4	30	C4	2
A5	Baseball 1	3	7.4	30	C1	1
A6	Baseball 1	3	7.4	30	C2	1
B1	Baseball Field 3	6	14.8	30	C9	3
B2	Baseball Field 3	6	14.8	30	C10	3
B3	Baseball Field 2	7	18.5	30	C5	2
B4	Baseball Field 2	8	22.2	30	C6	2
B5	Soccer 1	7	18.5	30	C11	4
B6	Soccer 1	7	18.5	30	C12	4
C2	Soccer 2	12	25.6	30	C15	5
C4	Soccer 2	12	25.6	30	C16	5
C5	Soccer 1	6	14.8	30	C13	4
C6	Soccer 1	6	14.8	30	C14	4
X1	Parking Lot East	0	0.0	30	C17	6
X2	Parking Lot West	0	0.0	30	C18	7
X3	Playground	0	0.0	30	C19	8
X4	Building Interior	0	0.0	30	C20	9
X5	Walkway Lights	0	0.0	30	C21	10
X6	Building Exterior Lights	0	0.0	30	C22	11
X7	Backlight	0	0.0	30	C23	12

MUSCO TO PROVIDE HOUR METER ON FACE OF CONTACTOR CABINETS FOR ALL BALLFIELD LIGHTING ONLY

musco

Project Number	166992		
Project Name	Reid Park 18/30		
Prepared by:			
Sales Rep:	Mike Higgins	Date:	07/18/2005
Scan:	166992-6		
Service Location	1 of 1		

EQUIPMENT LISTING

DESCRIPTION	APPROXIMATE SIZE
1. COMMUNICATION ENCLOSURE	16 X 16
2. CONTROL AND MONITORING CABINET	24 X 72
3. CONTROL AND MONITORING CABINET	24 X 72
4. CONTROL AND MONITORING CABINET	24 X 48

	QTY	SIZE
TOTAL CONTACTORS:	25	30 AMP
TOTAL OFF/On/Auto SWITCHES	14	

SWITCHING SCHEDULE

Field Type	Zones	Customer Field Name
BASEBALL	1,4	BASEBALL-Field 1
BASEBALL	2,5	BASEBALL- Field 2
BASEBALL	3,5	BASEBALL- Field 3
MANUAL	10	Walkway Lights
MANUAL	11	Building Exterior Lights
MANUAL	12	Backlight
MANUAL	6	Parking Lot East
MANUAL	7	Parking Lot West
MANUAL	8	Playground
MANUAL	9	Building Interior
Soccer-1	4	Soccer-Field 1
Soccer-2	2,5	Soccer- Field 2

MUSCO LIGHTING CONTROL SYSTEM 'CONTROL LINKS' (E)
N.T.S.

DETAIL NOTES:

1. #3/0 CU. 1" RGS EMBEDDED IN CONCRETE FOUNDATION WITH MINIMUM 2" ALL AROUND PER ARTICLE 250.50 (a). SEE UFER GROUND DETAIL.
2. THE REBAR MAY ONLY EXTEND OUT OF SLAB IN A DRY LOCATION. THE REBAR MUST EXTEND OUT OF SLAB AT LEAST SIX INCHES AND NO MORE THAN 18 INCHES AND THE POINT OF CONNECTION OF THE GROUNDING ELECTRODE CONDUCTOR IS ENCASED IN CONCRETE. EXCEPTION: WHERE THE CONNECTION OF THE GROUNDING ELECTRODE CONDUCTOR IS ENCASED IN CONCRETE.
3. CONNECTION TO ELECTRODE. CONNECT GROUNDING CONDUCTOR TO GROUNDING ELECTRODE WITH LISTED GROUND CLAMP. SEE C.E.C. 250-70.
4. 1 #6 CU. -3/4" RGS TO MAIN TELEPHONE BACKBOARD.
5. MAKE CONNECTION TO COLD WATER PIPING WITH-IN THE FIRST FIVE FEET OF THE WATER PIPE ENTRANCE TO THE BUILDING.

GENERAL NOTES:

GROUNDING ELECTRODE CONDUCTOR MUST TERMINATE AT NEAREST STRUCTURAL STEEL OR WATER PIPE (NEC 250-50 (a)

20 FT. (6.1 M) OR MORE OF 1/2" DIAMETER REINFORCING STEEL, OR #4 BARE COPPER WIRE (OR LARGER). WHERE SPLICES ARE NECESSARY TO OBTAIN THE REQUIRED 20 FEET OF REBAR, THEY MUST BE MADE SO THAT THE TWO BARS OVERLAP BY NO LESS THAN 15 INCHES AND ARE SECURED BY AT LEAST TWO STEEL TIE WIRES. REINFORCING RODS THAT ARE COATED WITH A NONCONDUCTIVE MATERIAL ARE NOT ACCEPTABLE AS AN ELECTRODE.

THE TOTAL RESISTANCE MEASURED BETWEEN THE MAIN SERVICE GROUND BUS AND THE EARTH SHALL NOT EXCEED 25 OHMS UNDER DRY GROUND CONDITIONS. SEE ELECTRICAL SPECIFICATIONS FOR "GROUND TESTS".

UFER GROUND
IN ACCORDANCE WITH THE 1999 N.E.C AND 2001 CALIFORNIA ELECTRIC CODE (C.E.C.)

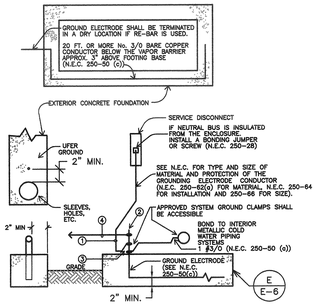

UFER GROUND DETAIL (D)
N.T.S.

REEDCORP ENGINEERING
CONSULTING ELECTRICAL ENGINEERS
2061 Business Center Drive, Suite 110
Irvine, CA 92612
(949) 752-1278 FAX: (949) 752-1287
E-MAIL : ee@reedcorp.net
04-216-1944

RHA LANDSCAPE ARCHITECTS PLANNERS, INC.
3612 MISSION INN AVE
RIVERSIDE, CALIFORNIA 92501
LIC. #1512
PH. (909) 781-1930
FAX (909) 686-8091

© R.H.A Landscape Architects - Planners, Inc. expressly reserves its common law copyright and other property rights in these plans, designed by any third party without first obtaining the express written permission. These plans are not to be reproduced, changed or copied in any form or manner whatsoever nor are they to be

CLIENT:
THE CITY OF RIVERSIDE
PARK AND RECREATION DEPT.
3900 Main Street
Riverside, California 92522

PROJECT:
Reid Park Expansion
Community Park
Orange St. and Garner Rd.

REVISIONS	DATE	BY
1 MISC.	1/26/06	RR

REGISTERED PROFESSIONAL ENGINEER THOMAS E. HARTMAN No. 7531 Exp: 9/30/06 ELECTRICAL STATE OF CALIFORNIA

SHEET TITLE
RESTROOM/CONCESSION BUILDING AND DETAILS

DESIGNED	MR
DRAWN	MR
CHECKED	RR
DATE	01-17-06
SCALE	AS NOTED
JOB NO.	

SHEET
E-6
OF 6 SHEETS

ATTACHMENT FIVE ADDENDUM THREE, 2/8/06

JDCORP\Cad Drawings\SDSKEROJ\1944\Reid Park\Sheets\E-6 Building Electrical.dwg, E-5 Building, 1/30/2006 9:02:22 AM, marioh, HP Designjet 1050C by HP E1.pc3, Reedcorp Engineering, Inc., Reedcorp Engineering, Inc.

(One Inch on Original Sheet) Drawing File: \\REEDCORP\Cad Drawings\SDSKEROJ\1944\Reid Park\Sheets\E-6 Building Electrical Jan 30, 2006 - 9:02am

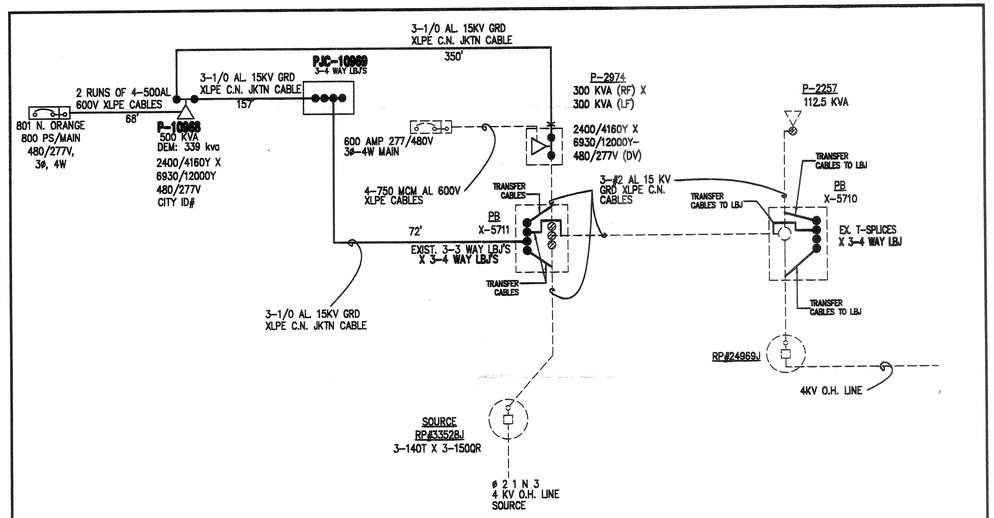

SINGLELINE SCHEMATIC

N.T.S.

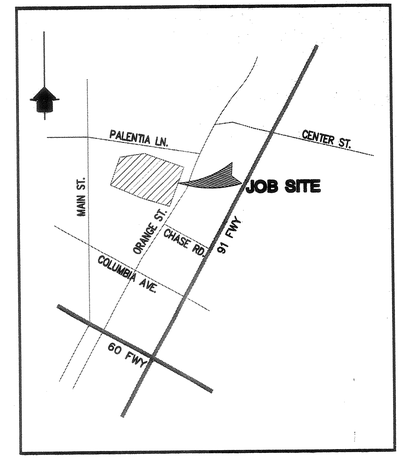

VICINITY MAP

NTS

SYMBOL LEGEND

PRIMARY
FUTURE TELEMETRY
SECONDARY

APPROX. LENGTH OF RUN

QTY, SIZE & TYPE OF CONDUIT IN TRENCH WHERE:
SCH40 – DENOTES DIRECT-BURIED SCHEDULE 40 PVC
DB120 – DENOTES DIRECT-BURIED DB-120 PVC
EB35 – DENOTES EB-35 PVC FULLY ENCASED IN CONCRETE

TRENCH LINE

EXISTING FACILITIES

TRANSFORMER SLAB BOX (8' X 10')
PER ITEM #SB-4 WITH (5' X 8.5' BOX) OF UGS-010 & UGS-721, INSTALL PER UGS-723 WITH GROUND RODS.

PEDESTAL JUNCTION CABINET (66" X 22" X 30") 3 PHASE
PER ITEM UGS-730 CABINET FURNISHED BY DEPARTMENT. INSTALL PER UGS-730.2. CONTRACTOR TO PICK UP AT CITY CORPORATION YARD

ELECTRIC SERVICE BOX (17" X 30" X 24")
PER ITEM ESB-6 OF UGS-009, INSTALL PER UGS-320.

STREET LIGHT ELECTROLIER
CONCRETE STANDARD 24'-3" PER ITEM S-2, LUMINAIRE 100W H.P.S. PER ITEM H-2, TO BE FURNISHED WITH I.E.S. TYPE 2, MEDIUM SEMI-CUT OFF LIGHT DISTRIBUTION, LAMP 100W H.P.S. PER ITEM HL-2, AND PHOTO CONTROL, ALL PER UGS-800 & UGS-801

1" DIRECT-BURIED SCHEDULE 40 PVC CONDUIT W/ 3-#8 CU 600V CABLES

PULLBOX (10"X 17"X 12")
PER ITEM #P-1 OF UGS-800, INSTALL PER UGS-320

CUSTOMER PARTICIPATION

1. ALL FACILITIES INSTALLED BY DEVELOPER SHALL BE INSPECTED AND APPROVED BY THE DEPARTMENT CONSTRUCTION INSPECTOR (PH. 826-2416). ANY CHANGES SHALL BE APPROVED BY THE DEPARTMENT PRIOR TO EXECUTION. THE DEVELOPER SHALL BE RESPONSIBLE FOR COORDINATING ALL PHASES OF CONSTRUCTION WITH THE DEPARTMENT CONSTRUCTION SUPT. (PH. 351-6300) AFTER THE INSPECTOR HAS NOTIFIED CONSTRUCTION THAT THE CUSTOMER'S WORK IS COMPLETE AND READY FOR DEPARTMENT WORK.
2. PROVIDE AND INSTALL ALL SUBSTRUCTURES, CONDUITS, (POLE RISER CONDUIT EXCEPTED) TRENCHING, BACKFILLING, AND RESURFACING AS SHOWN IN CONFORMANCE WITH THE FOLLOWING STANDARD DRAWINGS; UGS-020, 100, 100.1, 101, 115.1, 116, AND 125.2.
3. EXCAVATION FOR POWER SUBSTRUCTURES, CONDUITS AND ELECTROLIER FOUNDATIONS MUST BE DONE AFTER INSTALLATION OF CURBS & GUTTERS, BUT BEFORE INSTALLATION OF CURB RETURNS WITH SPANDRELS, CROSS GUTTERS, SIDEWALKS, AND DRIVE APRONS.
4. ALL CONTRACTORS WORKING ON OR AROUND THE DEPARTMENT'S UNDERGROUND ELECTRICAL FACILITIES MUST HAVE THE PROPERLY QUALIFIED PERSONNEL AND EQUIPMENT TO PERFORM THE SPECIFIED WORK. THE CONTRACTOR WILL BE SOLELY RESPONSIBLE TO ESTABLISH AND MAINTAIN A SAFE WORKING ENVIRONMENT INCLUDING, BUT NOT LIMITED TO WORK AROUND ENERGIZED HIGH VOLTAGE FACILITIES, GAS TESTING OF CONFINED SPACES, TRAFFIC AND PROTECTION.

   EVERY ENTRY BY ANY PERSONNEL INTO A PUBLIC UTILITIES HIGH VOLTAGE STRUCTURE WILL REQUIRE THE PRESENCE OF A QUALIFIED ELECTRICAL WORKER IN ACCORDANCE WITH Cal/OSHA. ALL DEVELOPERS AND CONTRACTORS ARE REQUIRED TO SUBMIT REQUIRED DOCUMENTATION AND FOLLOW REQUIRED PROCEDURES. COPIES OF THE POLICY AND DOCUMENTS MAY BE OBTAINED AT 3900 MAIN ST. RIVERSIDE, CA OR AT www.RIVERSIDEPUBLICUTILITIES.COM
5. THE CITY INSPECTOR HAS THE AUTHORITY TO STOP THE CONTRACTOR'S WORK IF HE DETERMINES THAT ADEQUATE SAFETY PRECAUTIONS ARE NOT BEING TAKEN. HOWEVER, THE PRESENCE OF THE CITY INSPECTOR DOES NOT RELIEVE THE CONTRACTOR OF HIS RESPONSIBILITY FOR INSURING SAFE AND APPROPRIATE WORK PRACTICES.
6. ACQUIRE A STREET OPENING PERMIT PRIOR TO EXCAVATING IN STREET RIGHT-OF-WAY.
7. METER ROOM DOOR TO HAVE SCHLAGE LOCK KEYED TO DEPARTMENT MASTER KEY; OR DOUBLE HASP.
8. ALL APPLICABLE SERVICE CHARGES TO BE PAID TO THE DEPARTMENT PRIOR TO INSTALLATION OF DEPARTMENT FACILITIES.
9. PLEASE NOTE ELECTRIC UTILITY CREWS WILL BE SCHEDULED AS SOON AS ALL ITEMS ABOVE ARE COMPLETED. AFTER UTILITY STRUCTURE WORK IS APPROVED, ALLOW TWENTY OR MORE WORKING DAYS LEAD TIME IN YOUR SCHEDULE BEFORE ELECTRIC UTILITY CREW WORK BEGINS.
10. THE UNDERGROUND PULL SECTION OF YOUR SERVICE ENTRANCE SWITCHGEAR AND METERING FACILITIES MUST BE COMMERCIAL RATED AND COMPLY WITH RPU APPROVED EUSERC (ELECTRIC UTILITY SERVICE EQUIPMENT REQUIREMENTS COMMITTEE) CONFIGURATIONS. PLEASE FORWARD SEVEN (7) LEGIBLE PAPER COPIES OR ONE (1) LEGIBLE AND PRINTABLE ELECTRONIC COPY OF MANUFACTURER'S SWITCHGEAR SHOP DRAWINGS TO THE ENGINEER NOTED BELOW FOR UTILITY APPROVAL PRIOR TO SWITCHGEAR FABRICATION. FAILURE TO RECEIVE UTILITY APPROVAL PRIOR TO FABRICATION COULD RESULT IN CHANGES TO THE SWITCHGEAR AND DELAY YOUR ELECTRIC SERVICE. ALL COSTS TO MAKE THE NECESSARY CORRECTION FOR COMPLIANCE TO RPU APPROVED EUSERC CONFIGURATIONS WILL BE BORNE BY THE DEVELOPER OR CONTRACTOR.

    UTILITY APPROVAL OF THE SWITCHGEAR IS REQUIRED FOR EVERY NEW COMMERCIAL SERVICE INCLUDING TENANT IMPROVEMENTS.

DEPARTMENT PARTICIPATION

1. PROVIDE AND INSTALL ALL POLE RISER CONDUITS, CABLES, TERMINATIONS, AND TRANSFORMERS FROM SOURCE TO TERMINATING PULLSECTION OR PULLBOX AS SHOWN IN CONFORMANCE WITH STANDARD CONSTRUCTION METHODS (STREET LIGHT FACILITIES EXCEPTED). MATERIALS TO BE SPECIFIED ON JOB MATERIAL LISTS.
2. OBTAIN CIRCUIT NUMBER AND RECLOSER TYPE FROM SUBSTATION OPERATOR.
3. CALL PUBLIC WORKS DEPARTMENT INSPECTION DIVISION (PH. 826-5346) FOR INSPECTION OF STREET OR ALLEY RIGHT-OF-WAY EXCAVATIONS.
4. TRANSFORMERS ARE 3ø DUAL VOLTAGE
5. FOR ENGINEERING INFORMATION AND/OR STAKING CONTACT ADRIAN REYES AT 826-5851 OR VAHID BAZEL AT 826-5830.

REGISTERED PROFESSIONAL ENGINEER
VAHID BAZEL
No. E 013835
Exp.6-30-08
ELECTRICAL
STATE OF CALIFORNIA
9/7/06

RECEIVED
SEP - 8 2006
PARK & RECREATION
PLANNING & DESIGN

EST. DEM: 399 KVA
REF DWGS: U5-6157

CIRCUIT # 21

48 HOURS BEFORE YOU DIG
CALL
UNDERGROUND SERVICE ALERT
1-800-227-2600

UNDERGROUND ELECTRICAL SERVICE DESIGN FOR:

REID PARK AND REC. CENTER

801 N. ORANGE

SCALE 1" = 40'	DRAWN REYES/BECK	CITY OF RIVERSIDE DEPARTMENT OF PUBLIC UTILITIES	
DATE 8/28/06	CHECKED VB 9/7/06	DESIGN W.O. # 0701111	U
JPA NO. N/A	APPROVED	CONSTRUCTION W.O. # 0701112	
MAP BK 10-4,10-6	BOARD DATE	DIV. E / SIZE 5 / PROJECT-SUBPROJECT # 060113-157	
CASE NO.	ACCT. 613000-470601XX	SHEET 1 OF 3	

ASBUILT	APPRVD	REVISIONS	DATE

Customer SEP 08 2006

801 N. ORANGE
800A PS/MAIN
480/277V,
3Ø,4W

1-5" SCH40 68'
2-5" SCH40

12.5R

12.0R

P-10968
8'x10' SLAB BOX
500 KVA

5.0R

2-4" SCH40 350'

1-4" SCH40 439' P2974 TO P-10968

PJC-10969 TO P-10968 1-4" SCH40 370'

X5711 TO PJC-10969 1-4" SCH40 103'

PJC-10969 TO STUB 1-4" SCH40
STUB & CAP 17'

PJC-10969
3-4 WAY
LB JUNCTION

PJC-10969 TO STUB 1-4" SCH40
STUB & CAP 5'

12.5R

X5711
P2974
TP-5
(5'6"X5')

10' X2-1/0AL-15 kV

4"

X5710

5'6"

1-5"

3Ø3A
120/208

ORANGE ST

48 HOURS BEFORE YOU DIG
CALL
UNDERGROUND SERVICE ALERT
1-800-227-2600

REGISTERED PROFESSIONAL ENGINEER
YAHID BAZEL
No. E 013835
Exp.6-30-06
ELECTRICAL
STATE OF CALIFORNIA

9/7/06

EST. DEM: 399 KVA
REF DWGS: U5-6157

CIRCUIT #21

UNDERGROUND ELECTRICAL SERVICE DESIGN FOR:
REID PARK AND REC. CENTER
801 N. ORANGE

SCALE 1" = 40'	DRAWN REYES/BECK	CITY OF RIVERSIDE DEPARTMENT OF PUBLIC UTILITIES	
DATE 8/28/06	CHECKED VB 9/7/06	DESIGN W.O. # 0701111	U
JPA NO. N/A	APPROVED YAM for CA	CONSTRUCTION W.O. # 0701112	
MAP BK 10-4,10-6	BOARD DATE	DIV. E / SIZE 5 / PROJECT-SUBPROJECT # 060113-157	
CASE NO.	ACCT. 613000-470601XX	SHEET 2 OF 3	

ASBUILT	APPRVD.	REVISIONS	DATE

Customer

SEP 08 2006

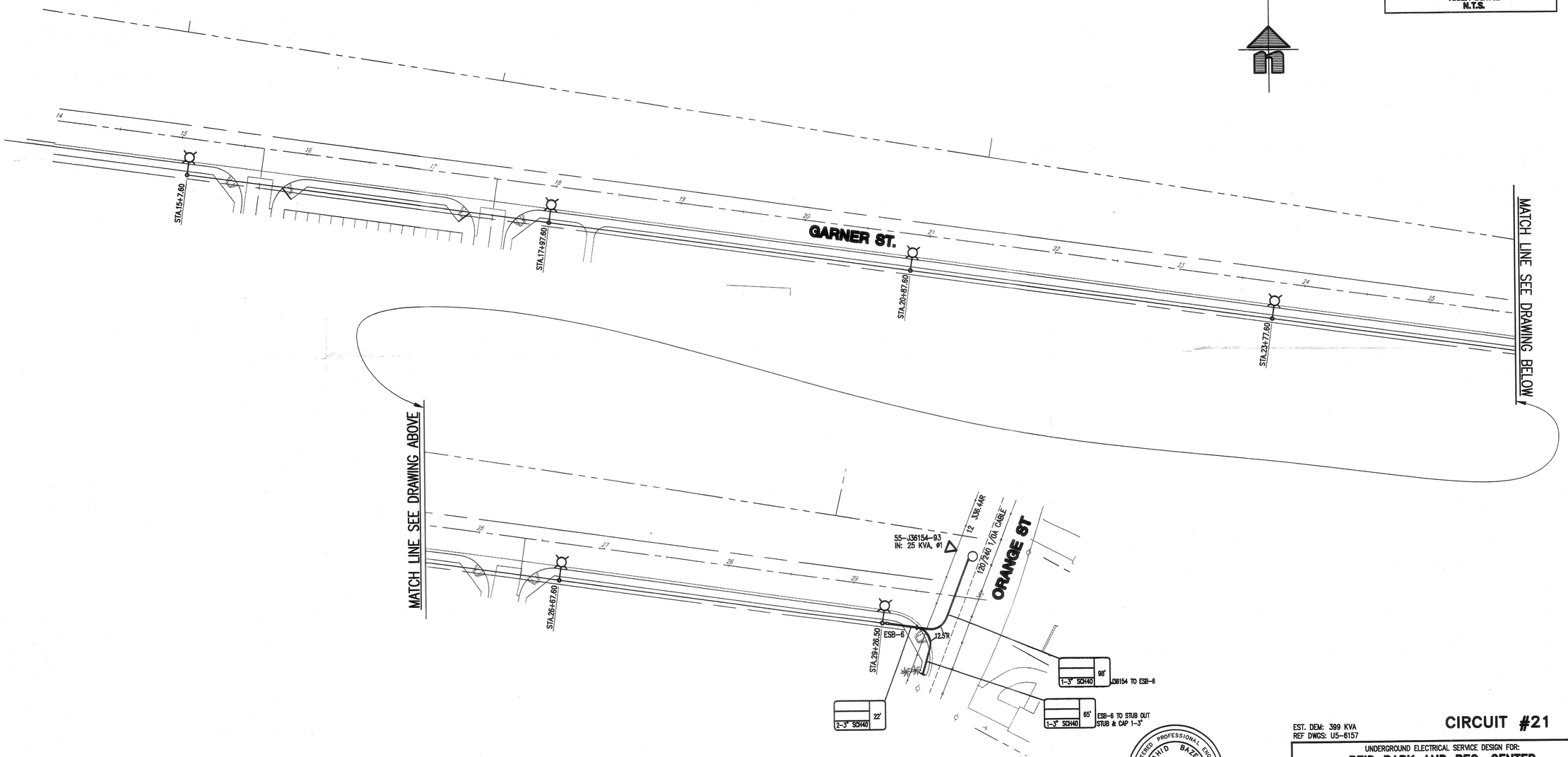

EST. DEM: 399 KVA
REF DWGS: U5-6157

CIRCUIT #21

UNDERGROUND ELECTRICAL SERVICE DESIGN FOR:

REID PARK AND REC. CENTER

801 N. ORANGE

SCALE 1" = 40'	DRAWN REYES/BECK	**CITY OF RIVERSIDE** DEPARTMENT OF PUBLIC UTILITIES
DATE 8/28/06	CHECKED VB 9/7/06	DESIGN W.O. # 0701111 U
JPA NO. N/A	APPROVED	CONSTRUCTION W.O. # 0701112
MAP BK 10-4,10-6	BOARD DATE	DIV. E / SIZE 5 / PROJECT-SUBPROJECT # 060113-157
CASE NO.	ACCT. 613000-470601XX	SHEET 3 OF 3

ASBUILT	APPRVD.	REVISIONS	DATE

Customer

SEP 08 2006