RUTH LEWIS COMMUNITY CENTER AT REID PARK GYMNASIUM T.I.

701 N. ORANGE ST.
RIVERSIDE
CA, 92501-1311

TITLE / OWNER

CODE DATA:

1997 UNIFORM BUILDING CODE
1997 UNIFORM MECHANICAL CODE
1997 UNIFORM PLUMBING CODE
1998 NATONAL ELECTRICAL CODE

SCOPE OF WORK:

INSTALLATION OF ACOUSTICAL PANELS AT INTERIOR GYMNASIUM WALLS AND CEILING.

GENERAL NOTES:

CONTRACTOR IS RESPONSIBLE FOR VERIFYING ALL DIMENSIONS AND CONDITIONS IN THE FIELD BEFORE ORDERING MATERIALS OR STARTING CONSTRUCTION. ANY CONDITION FOUND TO DIFFER FROM THAT SHOWN ON THE DRAWINGS SHALL BE BROUGHT TO THE ATTENTION OF THE ARCHITECT BEFORE WORK PROCEEDS.

UNLESS NOTED AS EXISTING, ALL NOTES DESCRIBING WORK OR MATERIALS SHALL BE CONSIDERED NEW.

CONTRACTOR IS RESPONSIBLE FOR REMOVAL AND REPLACEMENT (WHERE NECESSARY) OF ANY MATERIAL THAT IS OBSTRUCTING INSTALLATION OF EQUIPMENT OR MATERIALS REQUIRED BY THE CONSTRUCTION DOCUMENTS.

ALL AREAS IN WHICH WORK IS DONE SHALL BE LEFT CLEAN AND IN GOOD REPAIR. ANY DAMAGE DONE TO THE EXISTING BUILDING BY CONTRACTOR OR ANY OF HIS SUBCONTRACTORS OR EMPLOYEES SHALL BE REPAIRED TO THE SATISFACTION OF THE ARCHITECT AND AT NO COST TO THE OWNER.

CONTRACTOR IS RESPONSIBLE FOR PROVIDING ANY PREPARATION OF EXISTING SURFACES REQUIRED BY MANUFACTRUER OF PRODUCTS INSTALLED IN THIS CONTRACT.

ADDITIONAL COSTS WILL NOT BE ACCEPTED BY THE OWNER OR ARCHITECT FOR ANY ITEMS NOT BROUGHT TO THE ATTENTION OF THE ARCHITECT IN WRITING DURING THE BIDDING PERIOD. THE CONTRACTOR SHALL THOROUGHLY REVIEW BOTH THE CONTRACT DOCUMENTS AND THE PROJECT SITE DURING THE BIDDING PERIOD. "NOT KNOWING" OF CONFLICTS, INCONSISTENCIES, AND/OR COORDINATION OF ISSUES/ITEMS WILL NOT BE CONSIDERED FOR ADDITIONAL COST. SUBMITTAL OF BID WILL ACKNOWLEDGE THAT THE GENERAL CONTRACTOR IS EXPERIENCED IN THE TYPE OF WORK AND HAS MADE ALLOWANCES IN BID FOR ISSUES/CONFLICTS THAT MAY OCCUR DURING CONSTRUCTION. ONLY OWNER REQUESTED REVISIONS WILL BE REVIEWED AND ACCEPTED FOR ADDITIONAL SERVICES.

7. CONTRACTOR WILL VISIT SITE PRIOR TO BIDDING AND TAKE INTO ACCOUNT ALL THE SURFACE MOUNTED CONDUIT, JUNCTION BOXES AND OTHER MISCELLANIOUS ITEMS AND MAKE ADJUSTMENTS TO INCLUDE INTO BID ANY ADJUSTMENT NECESSARY. ALL ELECTRICAL OUTLETS THAT FALL BEHIND TECTUM PANELS WILL BE BROUGHT TO THE SURFACE BY USING EXTENTIONS. IF THE ELECTRICAL WIRE IS NOT LONG ENOUGH TO EXTEND, REWIRE TO THE NEAREST JUNCTION BOX OR SUBPANEL.

GENERAL NOTES:

ABBREVIATIONS

AB	anchor bolt			RO	rough opening
ABV	above	HB	hose bibb	ROW	right of way
AC	asphaltic concrete	HC	hollow core		
A/C	air conditioning	HD	heavy duty	S	south
ADD	addendum	HDR	header	SC	solid core
AGG	aggregate	HDW	hardware	SCH	schedule
ALT	alternate	HGT	height	SD	storm drain
ALUM	aluminum	HM	hollow metal	SEC	section
APPROX	approximate	HOR	horizontal	SH	shelf, shelving
ARCH	architect (ural)	HTG	heating	SHT	sheet
AUTO	automatic	HVAC	heating / ventilating air conditioning	SIM	similar
				SPEC	specification (s)
BD	board	HWD	hardwood	SPK	speaker
BEL	below	WH	water heater	SQ	square
BET	between			SS	stainless steel
BIT	bituminous	ID	inside diameter	ST	steel
BLDG	building	INCL	include (d, ing)	STA	station
BLK	block	INSUL	insulate (d, ion)	STD	standard
BLKG	blocking	INT	interior	STO	storage
BM	bench mark	INV	invert	STR	structural
BOT	bottom			SUS	suspended
BRG	bearing	JST	joist	SYM	symmetry (ical)
BRZ	bronze	JT	joint	SYS	system
BUR	built up roofing				
BW	both ways	KIT	kitchen	TEL	telephone
		KO	knockout	T&G	tongue & groove
CAB	cabinet			THK	thick (ness)
CAD	cadmium	LAB	laboratory	TV	television
CB	catch basin	LAM	laminate (d)	TYP	typical
CEM	cement	LAV	lavatory		
CER	ceramic	LBL	label	UNO	unless noted otherwise
CFT	cubic foot	LH	left hand	UR	urinal
CI	cast iron	LL	live load		
CIR	circle	LT	light	VERT	vertical
CIRC	circumference	LTL	lintel		
CLG	ceiling	LW	lightweight	VIN	vinyl
CLL	contract limit line				
CLR	clear (ance)	MAS	masonry	W	west
CLS	closure	MAX	maximum	W/	with
CM	centimeter	MB	machine bolt	W/O	without
CMU	concrete masonry unit	MBR	member	WC	water closet
COL	column	MC	medicine cabinet	WD	wood
COMB	combination	MECH	mechanic	WI	wrought iron
COMPO	composition	MED	medium	WIN	window
CONC	concrete	MET	metal	WPT	working point
CONT	continuous/ continue	MFR	manufacture (er)	WR	water repellant
CONTR	contract (or)	MH	manhole	WWF	welded wire fabric
CONST	construction	MIN	minimum		
CORR	corrugated	MIR	mirror		
CPR	copper	MISC	miscellaneous	L	angle
CPT	carpet (ed)	MLD	molding, moulding	℄	center line
CYD	cubic yard	MM	millimeter	d	penny
		MT	mount (ed, ing)	⊥	perpendicular
DEMO	demolish, demolition	MTL	material (s)	PL	plate
DH	double hung			ø	round
DIAG	diagonal	N	north	@	at
DIAM	diameter	NAT	natural		
DIM	dimension	NIC	not in contract		
DIV	division	NOM	nominal		
DR	door	NTS	not to scale		
DS	downspout				
DTL	detail	OA	overall		
DWG	drawing	OBSC	obscure		
DWR	drawer	OC	on center		
		OD	outside diameter		
E	east	OH	overhead		
EF	each face	OPG	opening		
ELEV	elevation	OPP	opposite		
ELEC	electric (al)				
EMER	emergency	PAR	parallel		
ENC	enclosure	PB	panic bar		
EP	electrical panelboard	PCC	precast concrete		
EQ	equal	PCF	pounds per cubic foot		
EQUIP	equipment	PED	pedestal		
EST	estimate	PERF	perforate (d)		
EWC	electric water cooler	PRE.FAB.	prefabricate (d)		
EXIST	existing	PFL	pounds per linear foot		
EXHST	exhaust	PIP	poured in place		
EXP	exposed	PL	property line		
EXT	exterior	PLT	plate		
		PLAS	plaster		
FA	fire alarm	PLYWD	plywood		
FD	floor drain	PNL	panel		
FE	fire extinguisher	PNT	paint (ed)		
FFE	finished floor elevation	PSF	pounds per square foot		
FFL	finished floor line	PSI	pounds per square inch		
FIN	finish (ed)	PT	point		
FLR	floor (ing)	PVC	polyvinyl chloride		
FLUOR	fluorescent				
FND	foundation	RA	return air		
FTG	footing	RAD	radius		
		RCP	reinforced concrete pipe		
GA	gage, gauge	RD	roof drain		
GI	galvanized iron	REFR	refrigerator		
GL	glass, glazing	REG	register		
GP	galvanized pipe	REM	remove		
GYP. BD.	gypsum board	RET	return		
GRD	grade, grading	RFG	roofing		
GSS	galvanized steel	RH	right hand		
GV	galvanized	RM	room		

SYMBOLS

SECTION — SHT. NO. — BUILDING / SECTION
DETAIL NO. — SHT. NO. — DETAIL
ELEV. NO. — SHT. NO. — ROOM/ ELEV.
INTERIOR ELEVATION — SHEET WHERE DRAWN
HEIGHT ABOVE FINISH FLOOR 8'-0" (U.O.N.)
OFFICE — ROOM NAME
XXXX — ROOM NUMBER
X — NOTE NO. — NOTE
X — DOOR NO. — DOOR
X — WINDOW NO. — WINDOW
X — REVISION NO. — REVISION

VICINITY MAP

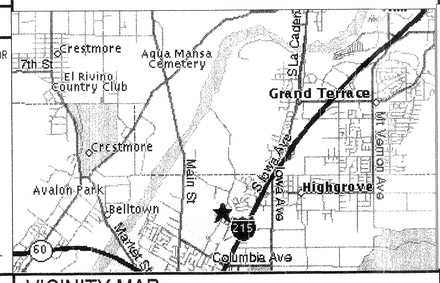

LOCATION MAP

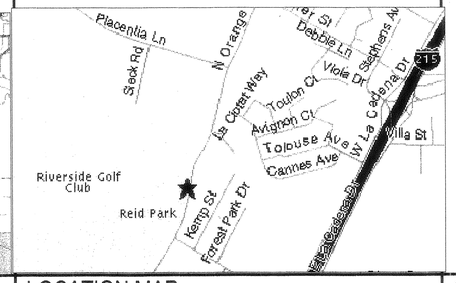

SHEET INDEX

SHEET NUMBER	SHEET TITLE
	ARCHITECTURAL
G-101	COVER, INDEX SHEET
A-101	FLOOR AND REFLECTED CEILING PLANS
A-102	INTERIOR ELEVATIONS
A-103	DETAILS

DIRECTORY

PROJECT OWNER

PROJECT OWNER:
CITY OF RIVERSIDE
PARK & RECREATION DEPARTMENT
3936 CHESTNUT STREET
RIVERSIDE, CA 92501
826-2012

OWNER'S REPRESENTATIVE
CITY OF RIVERSIDE
PARK & RECREATION DEPARTMENT
3936 CHESTNUT STREET
RIVERSIDE, CA 92501
CONTACT: BUD FISH
PHONE: 909-826-2027

ARCHITECT/ APPLICANT

GARY MILLER ARCHITECT AND ASSOCIATES
350 WEST 5TH STREET, SUITE 201
SAN BERNARDINO, CA. 92408
CONTACT: GEORGE MARQUEZ
PHONE: 909-889-4480 EX. 117
FAX: 909-384-9034

ACOUSTIC CONSULTANT

McKAY CONANT BROOK INC.
5655 LINDERO CANYON ROAD SUITE 325
WESTLAKE VILLAGE, CA. 91362
CONTACT: MICHAEL SANTAMARIA
PHONE: 818-991-9300
FAX: 818-991-2324

GMID
ARCHITECTURE – INTERIORS – PLANNING
350 W. 5TH STREET, SUITE 201
SAN BERNARDINO, CA 92401
PHONE: (909)-889-4480 FAX: (909)-384-9034
www.gmidgroup.com genmail@gmidgroup.com

LICENSED ARCHITECT
GARY W. MILLER
REG. C14635
REN. 09-30-03
STATE OF CALIFORNIA

PROJECT
RUTH LEWIS CENTER AT REID PARK GYMNASIUM T.I.
701 N. ORANGE ST.
RIVERSIDE, CA. 92501-1311

OWNER
CITY OF RIVERSIDE PARK & RECREATION DEPARTMENT
3936 CHESTNUT STREET
RIVERSIDE, CA 92501
909-826-2012

DATE: OCTOBER 1, 2002

REVISIONS

DATE	DESCRIPTION
12-17-02	OWNER REVISIONS

BID SET DATE :

ADDENDA

MARK	DATE	DESCRIPTION
1		
2		
3		
4		
5		
6		

POST BID REVISIONS

MARK	DATE	DESCRIPTION
A		
B		
C		
D		
E		
F		

PROJECT NO: 02957
CAD DWG FILE: G-001.dwg
DRAWN BY: JT/GHM
CHECKED BY: GARY M.
DRAWING SCALE: 1/8" = 1'-0"
APPROVED BY:

SHEET TITLE:

TITLE SHEET

G-001

SHEET # 1 OF 4

Drawing name: Z:\PROJECTS\2002 Projects\02957 Riverside P-R Gyms\CAD\REID\G-001.dwg Dec 16, 2002 - 8:53pm

LEGEND:

- EXISTING PAINTED STRIPE
- TECTUM PANEL
- PAINTED ACCENT COLOR TO MATCH EXISTING PAINTED STRIPE

NOTES:

1. EXISTING OFFICE WINDOW WITH ROLL-UP DOOR
2. EXISTING PASS THROUGH WINDOW WITH ROLL-UP DOOR
3. EXISTING CRASH PAD
4. EXISTING SURFACE MOUNTED ELECTRICAL CONDUIT
5. EXISTING BASKETBALL BACKBOARD AND RIM
6. EXISTING HVAC SOFFIT
7. EXISTING STRUCTURAL BEAM
8. EXISTING HVAC RIGID DUCT
9. EXISTING ROOF DRAIN
10. EXISTING BACKBOARD SUPPORTS
11. EXISTING SCOREBOARD
12. EXISTING LADDER
13. EXISTING HVAC REGISTER
14. EXISTING BLEACHERS
15. EXISTING PAINTED STRIPE
16. TECTUM PANEL WITH FIBER GLASS INSULATION BEHIND
17. ACCENT PAINT TO MATCH WALL STRIPE
18. EXISTING DOOR
19. EXISTING MECHANICAL FASTENERS

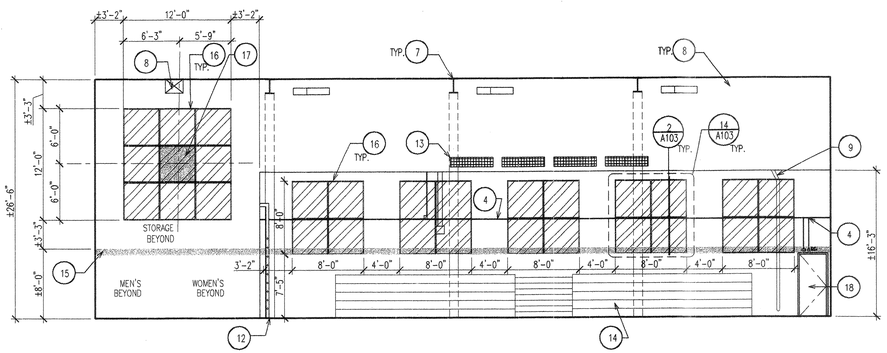

INTERIOR ELEVATION (A)
SCALE: 1/8" = 1'-0"

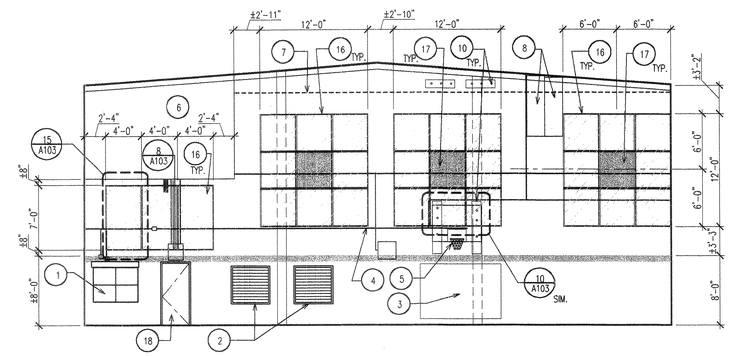

INTERIOR ELEVATION (B)
SCALE: 1/8" = 1'-0"

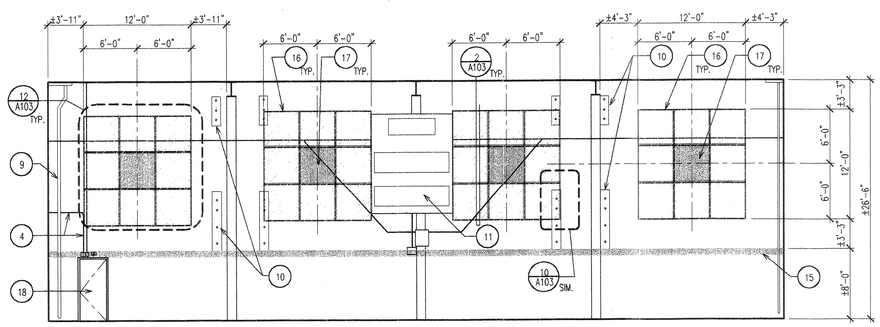

INTERIOR ELEVATION (C)
SCALE: 1/8" = 1'-0"

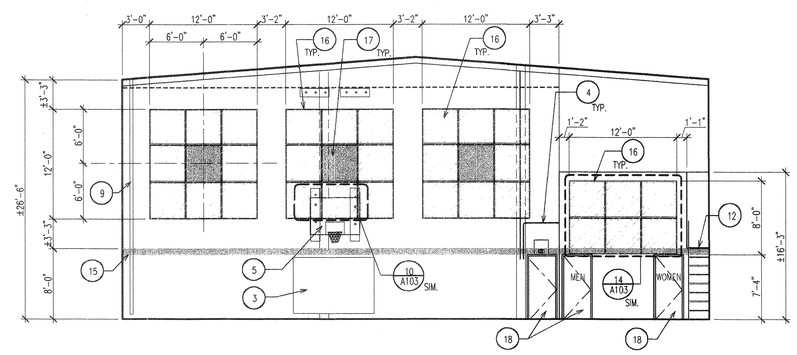

INTERIOR ELEVATION (D)
SCALE: 1/8" = 1'-0"

GMID
ARCHITECTURE – INTERIORS – PLANNING
350 W. 5TH STREET, SUITE 201
SAN BERNARDINO, CA 92401
PHONE: (909)-889-4480 FAX: (909)-384-9034
www.gmidgroup.com genmail@gmidgroup.com

LICENSED ARCHITECT GARY W. MILLER No. C14635 REN. 9-30-03 STATE OF CALIFORNIA

PROJECT

RUTH LEWIS CENTER AT REID PARK GYMNASIUM T.I.

701 N. ORANGE ST.
RIVERSIDE, CA. 92501-1311

OWNER

CITY OF RIVERSIDE PARK & RECREATION DEPARTMENT

3936 CHESTNUT STREET
RIVERSIDE, CA 92501
909-826-2012

DATE: OCTOBER 1, 2002

REVISIONS

DATE	DESCRIPTION
12-17-02	OWNER REVISIONS

BID SET DATE :

ADDENDA

MARK	DATE	DESCRIPTION
1		
2		
3		
4		
5		
6		

POST BID REVISIONS

MARK	DATE	DESCRIPTION
A		
B		
C		
D		
E		
F		

PROJECT NO:	02957
CAD DWG FILE:	B-203.dwg
DRAWN BY:	JT/GHM
CHECKED BY:	GARY M.
DRAWING SCALE:	1/8" = 1'-0"
APPROVED BY:	

SHEET TITLE:

INTERIOR ELEVATIONS

A-102

SHEET # 3 OF 4

Drawing name: Z:\PROJECTS\2002 Projects\02957 Riverside P-R Gyms\CAD\REID\B-203.dwg Dec 16, 2002 - 9:00pm

NOTES: ○

1. EXISTING RETRACTABLE BLEACHERS
2. EXISTING CRASH PADS
3. EXISTING PASS THROUGH WINDOW WITH ROLL-UP DOOR
4. EXISTING OFFICE WINDOW WITH ROLL-UP DOOR
5. EXISTING ROOF DRAIN
6. EXISTING BACKBOARD AND RIM
7. EXISTING LIGHT FIXTURE
8. EXISTING ELECTRICAL 'J' BOX. EXTEND FLUSH WITH NEW FINISH
9. EXISTING SMOKE DETECTOR. EXTEND FLUSH WITH NEW FINISH
10. EXISTING RIGID MECHANICAL DUCT
11. EXISTING ROOF HATCH WITH SECURITY BARS
12. EXISTING MECHANICAL REGISTERS
13. EXISTING GYPSUM BOARD CEILING TO REMAIN
14. TECTUM PANELS WITH FIBER GLASS INSULATION BEHIND
15. EXISTING STEEL TRUSS
16. EXISTING WOOD PURLINS
17. SUSPENDED CEILING TILE

DEMOLITION NOTES: ◇

1. REMOVE EXISTING SUSPENDED CEILING TILE. CEILING GRID TO REMAIN. PAINT GRID.

LEGEND:

- EXISTING LIGHT FIXTURE
- EXISTING HVAC REGISTER
- EXISTING RECESSED LIGHT FIXTURE
- EXISTING GYPSUM BOARD CEILING
- EXISTING 2X2 SUSPENDED CEILING
- EXISTING SMOKE DETECTOR
- EXISTING ELECTRICAL J-BOX
- EXISTING ROOF DRAIN
- EXISTING ROOF HATCH WITH SECURITY GRILL
- EXISTING CONCRETE TILT-UP WALL
- EXISTING FRAMED WALL
- TECTUM PANEL WITH FIBER GLASS INSULATION BEHIND

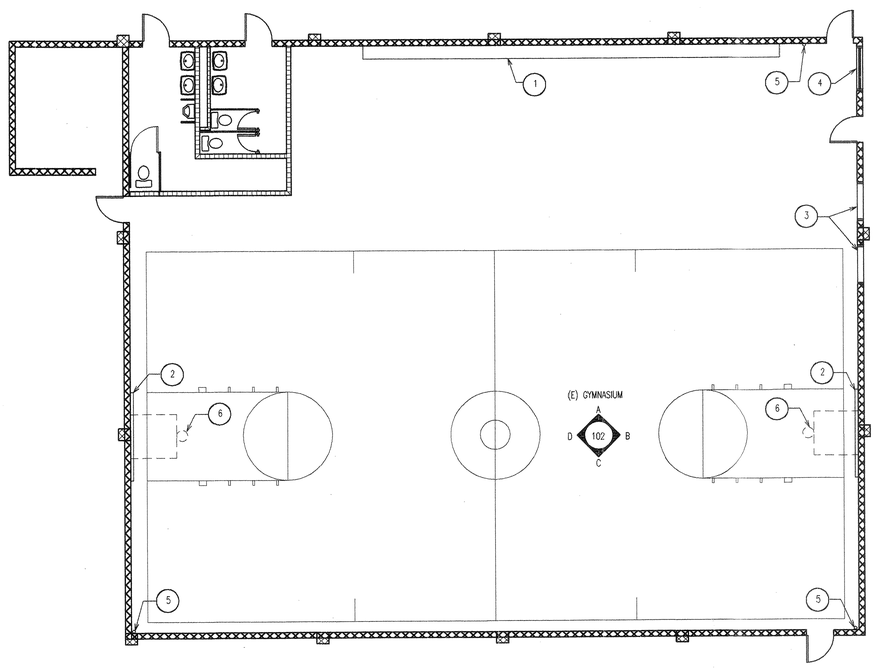

FLOOR PLAN
SCALE: 1/8" = 1'-0"

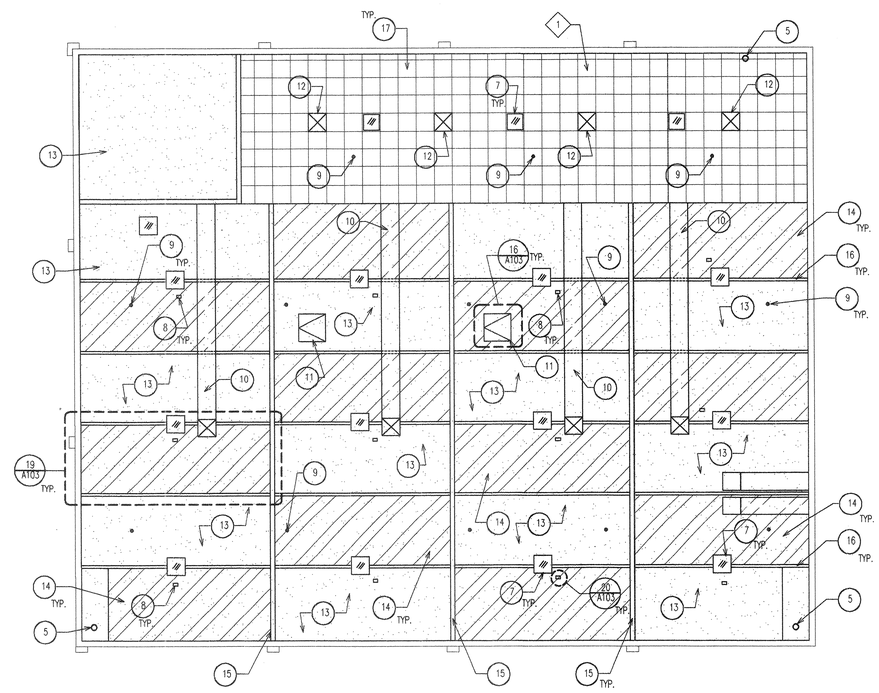

REFLECTED CEILING PLAN
SCALE: 1/8" = 1'-0"

GMID
ARCHITECTURE – INTERIORS – PLANNING
350 W. 5TH STREET, SUITE 201
SAN BERNARDINO, CA 92401
PHONE: (909)-889-4480 FAX: (909)-384-9034
www.gmidgroup.com genmail@gmidgroup.com

LICENSED ARCHITECT GARY M. MILLER No. C14635 REN. 9-30-03 STATE OF CALIFORNIA

PROJECT

RUTH LEWIS CENTER AT REID PARK GYMNASIUM T.I.
701 N. ORANGE ST.
RIVERSIDE, CA. 92501-1311

OWNER

CITY OF RIVERSIDE PARK & RECREATION DEPARTMENT
3936 CHESTNUT STREET
RIVERSIDE, CA 92501
909-826-2012

DATE: OCTOBER 1, 2002

REVISIONS

DATE	DESCRIPTION
12-17-02	OWNER REVISIONS

BID SET DATE :

ADDENDA

MARK	DATE	DESCRIPTION
1		
2		
3		
4		
5		
6		

POST BID REVISIONS

MARK	DATE	DESCRIPTION
A		
B		
C		
D		
E		
F		

PROJECT NO:	02957
CAD DWG FILE:	B-101.dwg
DRAWN BY:	JT/GHM
CHECKED BY:	GARY M.
DRAWING SCALE:	1/8" = 1'-0"
APPROVED BY:	

SHEET TITLE:

FLOOR & REFLECTED CEILING PLAN

A-101

SHEET # 2 OF 4

Drawing name: Z:\PROJECTS\2002 Projects\02957 Riverside P-R Gyms\CAD\REID\B-101.dwg Dec 16, 2002 - 8:54pm

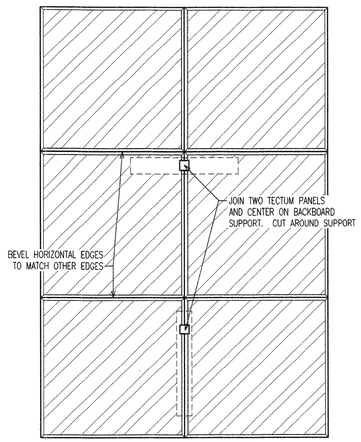

SHEET: A-102 SCALE: 1/2" = 1'-0" 18

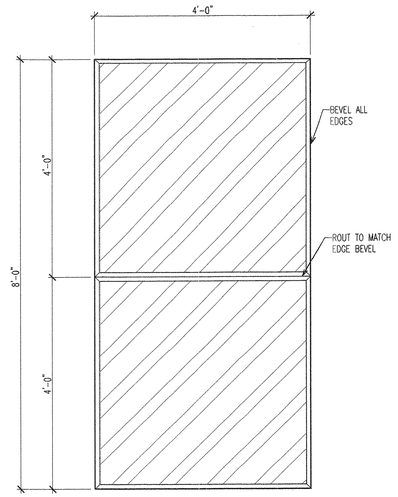

NOTE: (2) 4'X8' TECTUM PANELS

SHEET: A-102 SCALE: 3/4" = 1'-0" 14

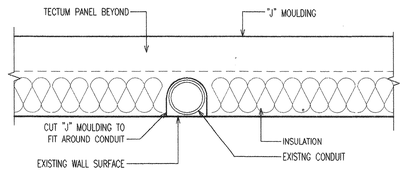

ELEVATION "A"

VIEW FROM BELOW "J" MOULDING

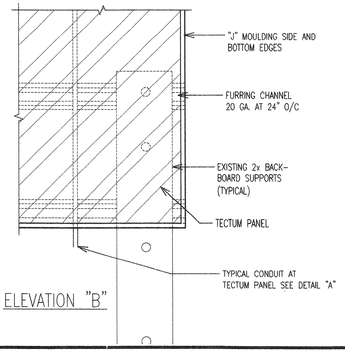

ELEVATION "B"

SHEET: A-102 SCALE: 3/4" = 1'-0" 10

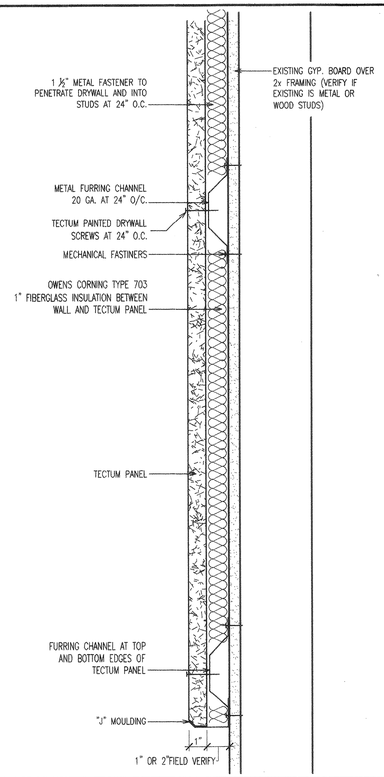

SHEET: A-103 SCALE: 3" = 1'-0" 6

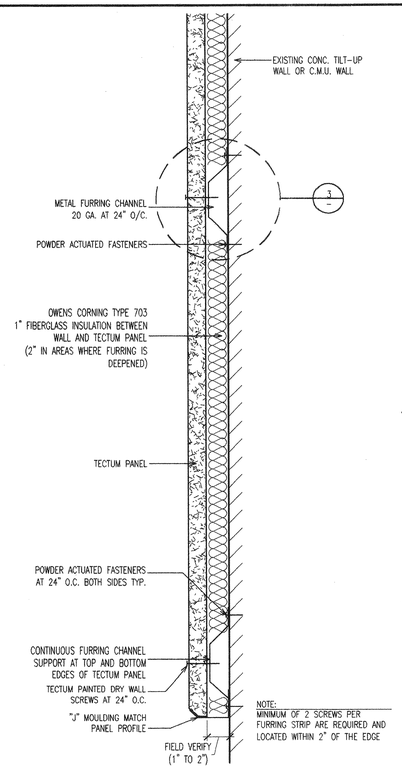

SHEET: A-102 SCALE: 3" = 1'-0" 2

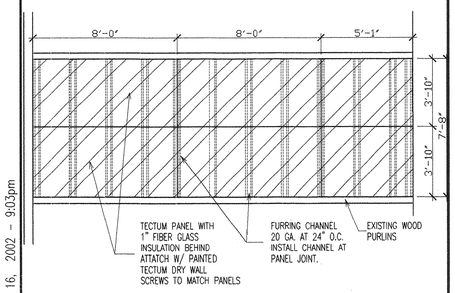

SHEET: A-101 SCALE: 1/4" = 1'-0" 19

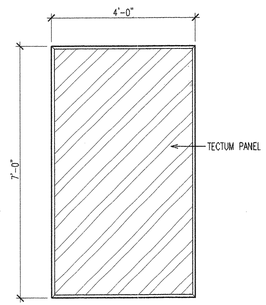

NOTE: BEVEL ALL EDGES

SHEET: A-102 SCALE: 1/2" = 1'-0" 15

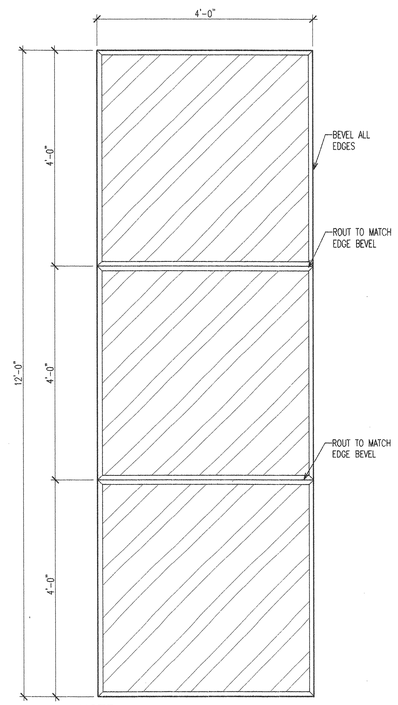

NOTE:

(3) 4'x4' TECTUM PANELS. CENTER SQUARE ON CENTER PANEL TO TO BE PAINTED WITH MATCHING STRIPED COLOR ON WALL

SHEET: A-102 SCALE: 3/4" = 1'-0" 12

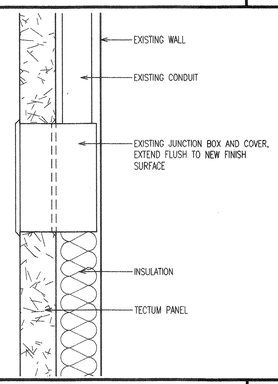

SHEET: A-102 SCALE: 6" = 1'-0" 7

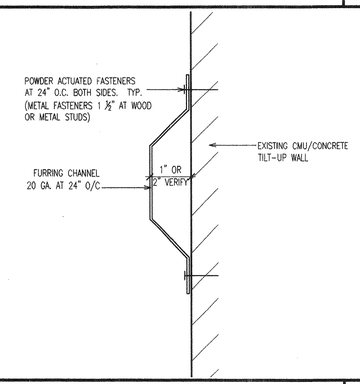

SHEET: A-103 SCALE: 6" = 1'-0" 3

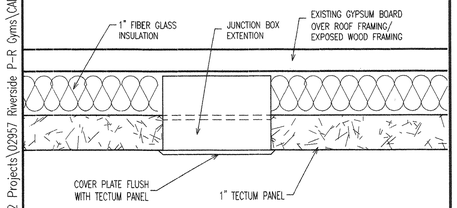

SHEET: A-101 SCALE: 6" = 1'-0" 20

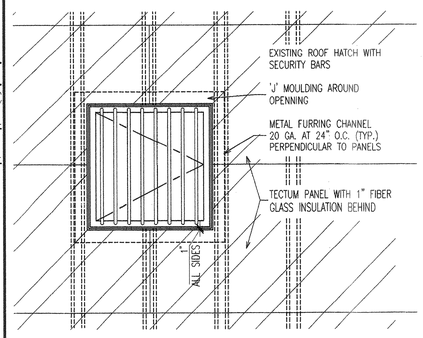

SHEET: A-101 SCALE: 1/2" = 1'-0" 16

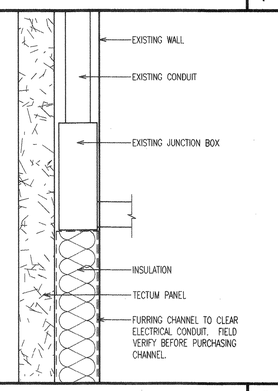

SHEET: A-102 SCALE: 6" = 1'-0" 8

SHEET: AX.X SCALE: X" = 1'-0" 4

GMID

ARCHITECTURE – INTERIORS – PLANNING

350 W. 5TH STREET, SUITE 201
SAN BERNARDINO, CA 92401
PHONE: (909)-889-4480 FAX: (909)-384-9034
www.gmidgroup.com genmail@gmidgroup.com

LICENSED ARCHITECT GARY W. MILLER No. C14835 REN. 9-30-03 STATE OF CALIFORNIA

PROJECT

RUTH LEWIS CENTER AT REID PARK GYMNASIUM T.I.

701 N. ORANGE ST.
RIVERSIDE, CA. 92501-1311

OWNER

CITY OF RIVERSIDE PARK & RECREATION DEPARTMENT

3936 CHESTNUT STREET
RIVERSIDE, CA 92501
909-826-2012

DATE: OCTOBER 1, 2002

REVISIONS

DATE	DESCRIPTION
12-17-02	OWNER REVISIONS

BID SET DATE :

ADDENDA

MARK	DATE	DESCRIPTION
1		
2		
3		
4		
5		
6		

POST BID REVISIONS

MARK	DATE	DESCRIPTION
A		
B		
C		
D		
E		
F		

PROJECT NO:	02957
CAD DWG FILE:	DETAILS.dwg
DRAWN BY:	JT/GHM
CHECKED BY:	GARY M.
DRAWING SCALE:	
APPROVED BY:	

SHEET TITLE:

DETAILS

A-103

SHEET # 4 OF 4

Drawing name: Z:\PROJECTS\2002 Projects\02957 Riverside P-R Gyms\CAD\DETAILS.dwg Dec 16, 2002 - 9:03pm