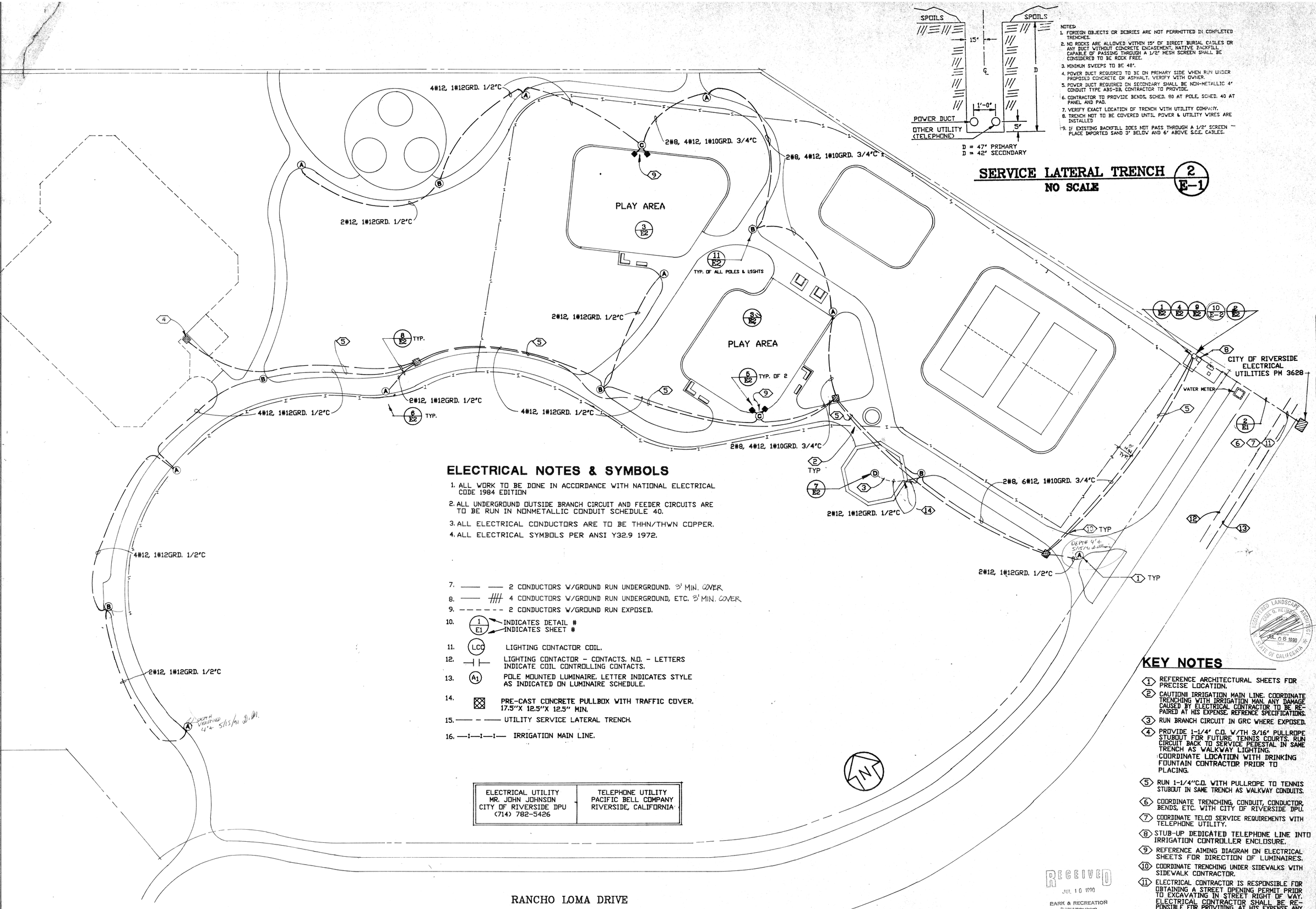

NOTES:

1. FOREIGN OBJECTS OR DEBRIES ARE NOT PERMITTED IN COMPLETED TRENCHES.
2. NO ROCKS ARE ALLOWED WITHIN 15" OF DIRECT BURIAL CABLES OR ANY DUCT WITHOUT CONCRETE ENCASEMENT. NATIVE BACKFILL CAPABLE OF PASSING THROUGH A 1/2" MESH SCREEN SHALL BE CONSIDERED TO BE ROCK FREE.
3. MINIMUM SWEEPS TO BE 48".
4. POWER DUCT REQUIRED TO BE ON PRIMARY SIDE WHEN RUN UNDER PROPOSED CONCRETE OR ASPHALT. VERIFY WITH OWNER.
5. POWER DUCT REQUIRED ON SECONDARY SHALL BE NON-METALLIC 4" CONDUIT TYPE ABS-DB. CONTRACTOR TO PROVIDE.
6. CONTRACTOR TO PROVIDE BENDS, SCHED. 80 AT POLE, SCHED. 40 AT PANEL AND PAD.
7. VERIFY EXACT LOCATION OF TRENCH WITH UTILITY COMPANY.
8. TRENCH NOT TO BE COVERED UNTIL POWER & UTILITY WIRES ARE INSTALLED
9. IF EXISTING BACKFILL DOES NOT PASS THROUGH A 1/2" SCREEN — PLACE IMPORTED SAND 3" BELOW AND 6" ABOVE S.C.E. CABLES.

SERVICE LATERAL TRENCH (2 / E-1)

NO SCALE

ELECTRICAL NOTES & SYMBOLS

1. ALL WORK TO BE DONE IN ACCORDANCE WITH NATIONAL ELECTRICAL CODE 1984 EDITION
2. ALL UNDERGROUND OUTSIDE BRANCH CIRCUIT AND FEEDER CIRCUITS ARE TO BE RUN IN NONMETALLIC CONDUIT SCHEDULE 40.
3. ALL ELECTRICAL CONDUCTORS ARE TO BE THHN/THWN COPPER.
4. ALL ELECTRICAL SYMBOLS PER ANSI Y32.9 1972.

7. —— —— 2 CONDUCTORS W/GROUND RUN UNDERGROUND. 3' MIN. COVER
8. —— #### 4 CONDUCTORS W/GROUND RUN UNDERGROUND, ETC. 3' MIN. COVER
9. - - - - - - - 2 CONDUCTORS W/GROUND RUN EXPOSED.
10. (1 / E1) INDICATES DETAIL # / INDICATES SHEET #
11. (LCC) LIGHTING CONTACTOR COIL.
12. ⊣ ⊢ LIGHTING CONTACTOR - CONTACTS. N.O. - LETTERS INDICATE COIL CONTROLLING CONTACTS.
13. (A1) POLE MOUNTED LUMINAIRE. LETTER INDICATES STYLE AS INDICATED ON LUMINAIRE SCHEDULE.
14. ⊠ PRE-CAST CONCRETE PULLBOX WITH TRAFFIC COVER. 17.5"X 12.5"X 12.5" MIN.
15. —— - - —— UTILITY SERVICE LATERAL TRENCH.
16. —I—I—I— IRRIGATION MAIN LINE.

ELECTRICAL UTILITY	TELEPHONE UTILITY
MR. JOHN JOHNSON CITY OF RIVERSIDE DPU (714) 782-5426	PACIFIC BELL COMPANY RIVERSIDE, CALIFORNIA

KEY NOTES

1. REFERENCE ARCHITECTURAL SHEETS FOR PRECISE LOCATION.
2. CAUTION! IRRIGATION MAIN LINE. COORDINATE TRENCHING WITH IRRIGATION MAN. ANY DAMAGE CAUSED BY ELECTRICAL CONTRACTOR TO BE REPAIRED AT HIS EXPENSE. REFRENCE SPECIFICATIONS.
3. RUN BRANCH CIRCUIT IN GRC WHERE EXPOSED.
4. PROVIDE 1-1/4" C.O. W/TH 3/16" PULLROPE STUBOUT FOR FUTURE TENNIS COURTS. RUN CIRCUIT BACK TO SERVICE PEDESTAL IN SAME TRENCH AS WALKWAY LIGHTING.
   COORDINATE LOCATION WITH DRINKING FOUNTAIN CONTRACTOR PRIOR TO PLACING.
5. RUN 1-1/4"C.O. WITH PULLROPE TO TENNIS STUBOUT IN SAME TRENCH AS WALKWAY CONDUITS.
6. COORDINATE TRENCHING, CONDUIT, CONDUCTOR, BENDS, ETC. WITH CITY OF RIVERSIDE DPU.
7. COORDINATE TELCO SERVICE REQUIREMENTS WITH TELEPHONE UTILITY.
8. STUB-UP DEDICATED TELEPHONE LINE INTO IRRIGATION CONTROLLER ENCLOSURE.
9. REFERENCE AIMING DIAGRAM ON ELECTRICAL SHEETS FOR DIRECTION OF LUMINAIRES.
10. COORDINATE TRENCHING UNDER SIDEWALKS WITH SIDEWALK CONTRACTOR.
11. ELECTRICAL CONTRACTOR IS RESPONSIBLE FOR OBTAINING A STREET OPENING PERMIT PRIOR TO EXCAVATING IN STREET RIGHT OF WAY. ELECTRICAL CONTRACTOR SHALL BE RESPONSIBLE FOR PROVIDING, AT HIS EXPENSE ANY FLAGMAN, BARRIERS, ETC REQUIRED BY CITY DURING EXCAVATING IN RIGHT OF WAY.
12. CAUTION! SEWER LINE. ANY DAMAGE CAUSED BY ELECTRICAL CONTRACTOR TO BE REPAIRED AT HIS EXPENSE. REFRENCE SPECIFICATIONS.
13. CAUTION! STORM DRAIN LINE ANY DAMAGE CAUSED BY ELECTRICAL CONTRACTOR TO BE REPAIRED AT HIS EXPENSE. REFRENCE SPECIFICATIONS.
14. SWEEP UP INTO SHELTER POST THROUGH FOOTING. REF. D/C-7.

ELECTRICAL SITE PLAN (1 / E-1)

SCALE - 1" = 20'-0"

RECEIVED JUL 10 1990 PARK & RECREATION DEPARTMENT

REGISTERED PROFESSIONAL ENGINEER JOSEPH M. NOLAN NO. E 8333 OCT 12 1989 ELECTRICAL STATE OF CALIFORNIA

REGISTERED LANDSCAPE ARCHITECT JOEL G. HEIMBERGER JUL 06 1990 STATE OF CALIFORNIA

LANDSCAPE ARCHITECTURE AND PLANNING

ASLA

Heimberger Hirsch

Project;

Rancho Loma Park

The City of Riverside
3900 Main Street
Riverside, CA. 92522

DREW ENGINEERING, INC.
CONSULTING ELECTRICAL ENGINEERS
(619) 242-3389
18830 HWY. 18, SUITE 6, APPLE VALLEY, CA 92307

REV. 1 - PER PLAN CHECK 6/19/90

Date; July 1, 1990
Design;
Job No; 89014

Description;

ELECTRICAL SITE PLAN

Sheet 16 of 17

Dwg. # E-1

P - 0810

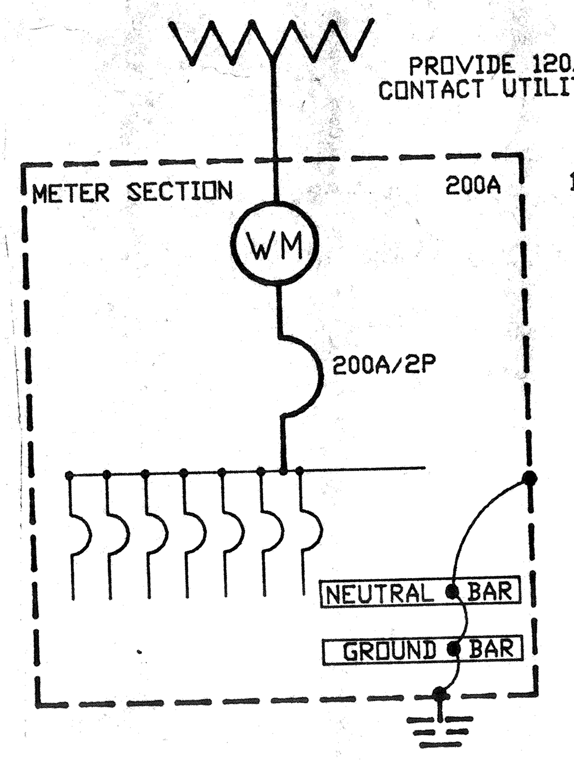

NOTE:
1. BOND NEUTRAL BUS, GROUNDING BUS AND SERVICE RACEWAY. CONNECT TO CONCRETE ENCASED ELECTRODE AND TO NEAREST AVAIL. METALLIC WATER PIPE. USE #6 COPPER CONDUCTOR FOR GROUNDING AND #3/0 COPPER CONDUCTORS FOR BONDING.
2. REFERENCE SITE PLAN AND A.C. BREAKERS ASSIGNMENTS FOR SIZES OF CIRCUIT BREAKERS, CONDUCTORS & CONDUIT
3. FULL COMPONENT INTEGRATED EQUIPMENT RATING OF MAIN SWITCHBOARD TO BE 42KAIC AS SPECIFIED IN UL STD 891

A.C. SINGLE LINE DIAGRAM (1 / E-2)
NO SCALE

VOLTAGE DROP CALCULATIONS

*** RANCHO LOMA PARK - RIVERSIDE - 10/09/89 ***

RUN	TYPE	CONDUCTOR	VOLTS	AMPS/LEG	LOOP DIST.
PLAYAREA	CU	8	240	14.53	600 '

THIS CIRCUIT HAS A VOLTAGE DROP OF 6.80004 VOLTS WHICH = 2.83335 %
3 % ALLOWED

CANOPY	CU	12	120	1.5	460 '

THIS CIRCUIT HAS A VOLTAGE DROP OF 1.38 VOLTS WHICH = 1.15 %
5 % ALLOWED

TENNIS	CU	6	240	11.7	1260 '

THIS CIRCUIT HAS A VOLTAGE DROP OF 7.22358 VOLTS WHICH = 3.00983 %
3 % ALLOWED

VOLTAGE DROP.........****
RANCHO LOMA PARK - RVSDE A POLES ERROR FACTOR
10/09/89 WATTS---> 150.0000 1.000
240 VOLTS X 5% = 12.000 VOLTS
#12 COPPER ------> 0.0020 OHMS/FOOT

OUTLET	DISTANCE (FT)	VD ynnyn
16	0	0
15	0	0
14	0	0
13	0	0
12	0	0
11	0	0
10	0	0
9	130	3.3930
8	170	3.9440
7	0	0
6	0	0
5	0	0
4	140	1.6240
3	125	1.0875
2	130	0.7540
1	235	0.6815

11.4840<-- VOLTAGE DROP TOT DIST ---------
4.7850<---% VOLTAGE DROP

VOLTAGE DROP.........****
RANCHO LOMA PARK - RVSDE B POL ERROR FACTOR
10/09/89 WATTS---> 150.000000 1.00
240VOLTS X 5% = 12.00 VOLTS
#12 COPPER-----> 0.002000 OHMS/FOOT

OUTLET	DISTANCE (FT)	VD ynnyn
16	0	0
15	0	0
14	0	0
13	0	0
12	0	0
11	0	0
10	0	0
9	0	0
8	0	0
7	0	0
6	230	4.002000
5	60	0.870000
4	0	0
3	140	1.218000
2	200	1.160000
1	200	0.580000

--------- 7.830000 VOLTAGE DROP
--------- 3.262500% VOLTAGE DROP

PERCENT CONDUIT FILL

*** RANCHO LOMA PARK - RIVERSIDE - FUTURE TENNIS COURTS ***

RUN #	INSULATION	CONDUCTOR	QTY	CONDUIT	FILL
1	THHN	6	4		
	THHN	12	1		
				1 1/4 INCH	14.6 % (Allowable 40%)

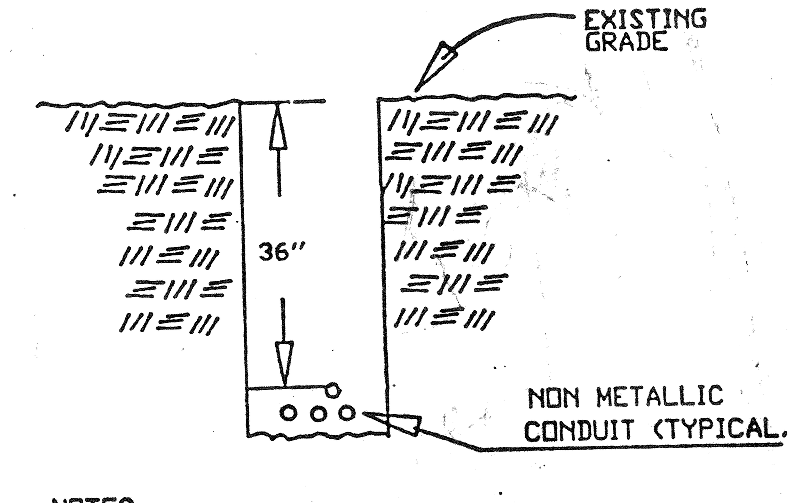

NOTES:
1. LAY CONDUIT, FILL, COMPACT TO 90% MATCH SURROUNDINGS.

BRANCH CIRCUIT TRENCH DETAIL (8 / E-2)
NO SCALE

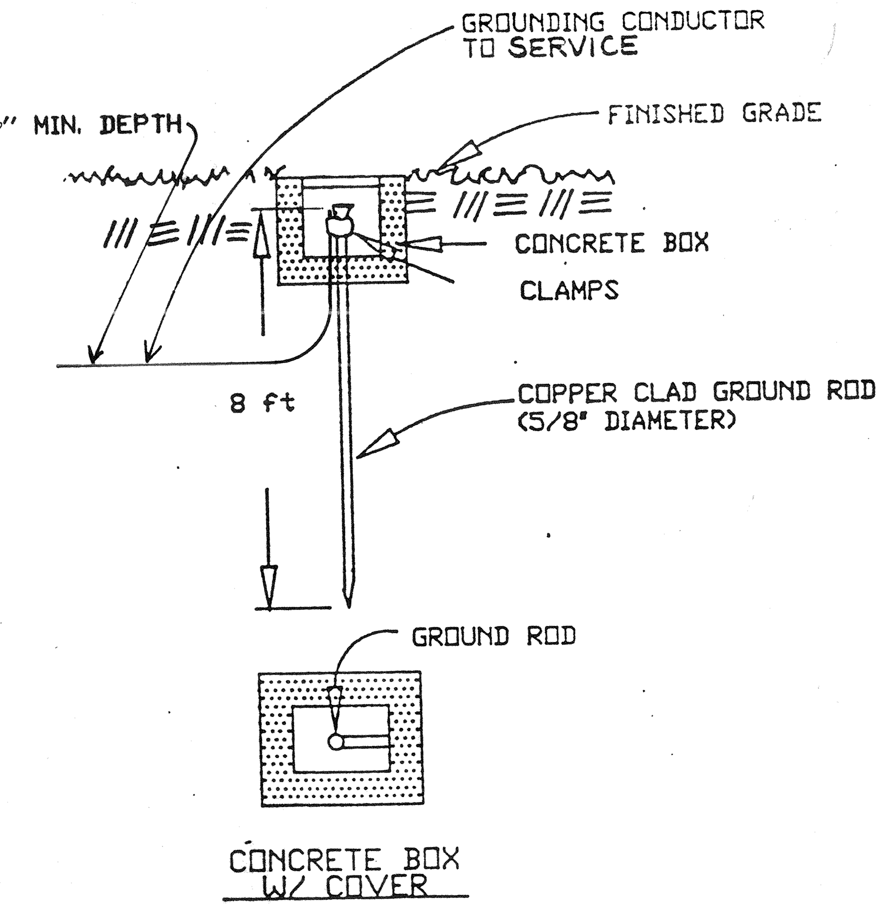

MADE ELECTRODE GROUND DETAIL (2 / E-2)
NO SCALE

TABLE OF HORIZONTAL ILLUMINATION LEVELS

RANCHO LOMA PARK

TABLE OF HORIZONTAL ILLUMINATION LEVELS
FOR POINTS 3.00 FT ABOVE PAVEMENT LEVEL
ALL VALUES IN FOOTCANDLES

Y CO-ORD. FEET	0.0	10.0	20.0	30.0	40.0	50.0	60.0	70.0	80.0	90.0	100.0	110.0	120.0
180.0	0.20	0.32	0.54	0.86	1.60	3.66	6.34	8.77	8.43	9.32	9.19	7.33	4.05
170.0	0.2	0.4	0.6	1.1	2.4	5.2	6.2	8.5	12.8	16.5	18.7	15.5	10.7
160.0	0.3	0.4	0.7	1.3	2.6	4.6	6.1	9.8	16.7	[illegible]	36.4	32.3	18.0
150.0	0.3	0.4	0.7	1.3	2.4	4.3	6.2	10.3	19.0	34.6	[illegible]	47.3	24.4
140.0	0.3	0.4	0.7	1.3	2.6	4.4	6.2	10.1	17.9	33.0	44.8	41.6	20.7
130.0	0.3	0.5	0.7	1.2	2.6	5.1	6.0	9.0	14.6	21.2	25.3	20.3	14.2
120.0	0.3	0.4	0.7	1.1	2.1	4.5	6.8	8.5	10.0	11.7	12.0	10.0	6.0
110.0	0.38	0.46	0.62	0.86	1.26	2.63	4.84	7.74	6.76	6.83	6.33	4.83	2.69
100.0	0.46	0.52	0.60	0.75	0.95	1.38	2.55	4.89	5.47	4.65	3.71	2.32	1.45
90.0	0.62	0.66	0.71	0.82	0.92	0.99	1.34	2.33	3.32	3.36	2.41	1.40	0.82
80.0	1.01	1.06	1.08	1.14	1.15	1.04	1.03	1.12	1.41	1.40	1.14	0.90	0.62
70.0	2.82	2.88	2.87	2.33	1.69	1.31	1.04	0.93	0.85	0.72	0.63	0.57	0.46
60.0	6.63	6.73	5.85	4.90	2.86	1.80	1.21	0.95	0.71	0.50	0.43	0.41	0.36
50.0	8.11	8.24	6.41	5.18	4.12	2.64	1.78	1.14	0.69	0.47	0.38	0.33	0.30
40.0	11.3	11.6	9.3	6.8	5.2	4.2	2.8	1.5	0.9	0.5	0.4	0.3	0.2
30.0	19.1	19.9	14.6	9.8	6.8	5.2	4.5	2.0	0.9	0.5	0.3	0.2	0.2
20.0	34.1	35.0	23.1	14.1	8.9	6.3	5.6	2.3	0.8	0.5	0.3	0.2	0.2
10.0	51.7	[illegible]	33.1	18.3	10.7	8.4	5.7	2.3	0.8	0.5	0.3	0.2	0.2
0.0	44.1	44.9	28.9	15.9	9.8	7.3	5.6	2.3	0.8	0.5	0.3	0.2	0.1

X CO-ORDINATE - FEET

SCALE: 1 INCH = 20.0 FEET

AVERAGE FOOTCANDLES = 11.6/11.1
MAXIMUM FOOTCANDLES = 51.8/58.2
MINIMUM FOOTCANDLES = 1.04/1.3
MAX./MIN. RATIO =
AVG./MIN. RATIO = 11.2:1/8.6:1

LIST OF LUMINAIRE POSITIONS AND ORIENTATIONS

LUMINAIRE ORIENTATION IS MEASURED FROM THE FORWARD Y DIRECTION.

POLE NO.	LUMINAIRE NO.	LUMINAIRE TYPE	X CO-ORD. FEET	Y CO-ORD. FEET	HEIGHT ABOVE PAVEMENT	ORIENTATION ANGLE
1	1	1	5.00	7.00	30.00	0.0
1	2	1	5.00	7.00	30.00	90.0
2	1	1	103.00	148.00	30.00	225.0
2	2	1	103.00	148.00	30.00	315.0

TOTAL NO. OF LUMINAIRES = 4

PHOTOMETRIC LAYOUT - PLAY AREA (3 / E-2)
SCALE - 1" = 20'-0"

AC BREAKER ASSIGNMENTS

TYPE MYERS
VOLTS 120/240
PHASE 1
WIRE 3
M.C.B. 200AMPS

PANEL MAIN SWBRD
LOCATION REF SITE PLAN
FEEDER REF A.C. SINGLE LINE
AMPS 200
MOUNTING PAD

CKT #	DESCRIPTION LOCATION	LOAD TYPE	VOLT AMPS	PH	AMPS AMPS	POLE	B.C. CONDR	GRD WIRE
1	SPRINKLER	MISC	1500	A	20	1	#12	#12
2	WALKWAY LIGHTS-A	LITES	783	A	20	2	#12	#12
3	WALKWAY LIGHTS-B	LITES	522	B	--		#12	
4	WALKWAY LIGHTS-A	LITES	783	B	20	2	#12	#12
5	WALKWAY LIGHTS-B	LITES	522	A	--		#12	#12
6	PLAY AREA LIGHTS	LITES	2325	A	20	2	#8	#12
7	SHELTER LIGHT	MISC	174	B	20	1	#12	#12
8	PLAY AREA LIGHTS	LITES	2325	B	--		#8	
9	TC & LTG CONTACTORS	MISC	500	A	20	1	#12	#12
10	TENNIS #1 (FUT)	SPORT	1395	A	20	2	1-1/4	
11	TENNIS #2 (FUT)	SPORT	1395	B	--		C.O.	
12	TENNIS #1 (FUT)	SPORT	1395	B	20	2	WITH	
13	TENNIS #2 (FUT)	SPORT	1395	A	--		PROPE	
14	RECEPTACLE	RECEP	180	A	20	1	#12	#12
15	SPACE			B				
16	SPACE			B				
17	SPACE			A				
18	SPACE			A				
19	SPACE			B				
20	SPACE			B				
21	SPACE			A				
22	SPACE			A				
23	SPACE			B				
24	SPACE			B				

TOTAL VOLTAMPS 15014
AMPS/LEG 63
PANELBOARD 200 AMP

BREAKER ASSIGNMENT (10 / E-2)
NO SCALE

LIGHTING FIXTURE SCHEDULE (11 / E2)

TYPE	VA	VOLTS	LAMPS	MODEL	MOUNTING
A	174	240	1X150WXHPS	SPAULDING VA-150-HPS-10	POLE +16FT W/PE CELL REF DET.
B	174	240	1X150WXHPS	SPAULDING VA-150-HPS-10	POLE +16FT W/PE CELL REF DET.
C	1163	240	21X1000WXHPS	SPAULD CVVIII-1000-HPS-FG-SS	POLE +30FT W/PE CELL REF DET.
D	116	120	1X100WXHPS	KENNAL - 5705	SURF W/PE CELL REF DETAILS.

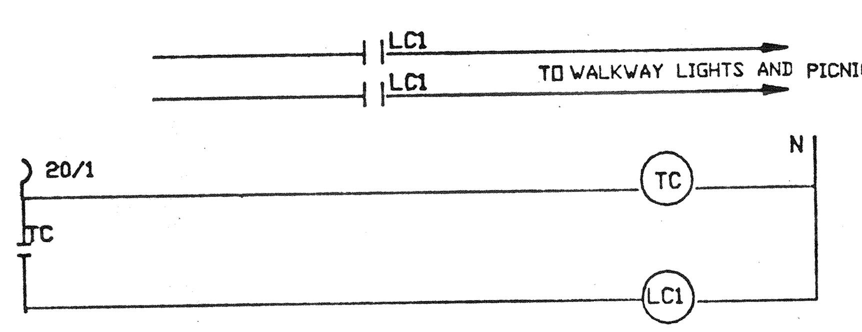

NOTE:
1. MOUNT TIME CLOCK AND CONTACTORS IN SERVICE PEDESTAL
2. RATING OF CONTACTS TO MATCH RATING OF CIRCUIT BREAKERS.
3. ALL CONTROL WIRING TO BE #12 THWN/THHN CU.
4. PROVIDE TIMECLOCK, CONTACTORS AND CONTROLS FOR BOTH A AND B WALKWAY LIGHTS AND PICNIC SHELTER/PLAY AREA. LIGHTS. 3 TOTAL.
5. PROVIDE ONE P.E. CELL CONTROL/CIRCUIT. (3) TOTAL.

TIMED CONTACTOR CONTROL OF WALKWAY/PICNIC SHELTER/PLAY AREA (4 / E-2)
NO SCALE

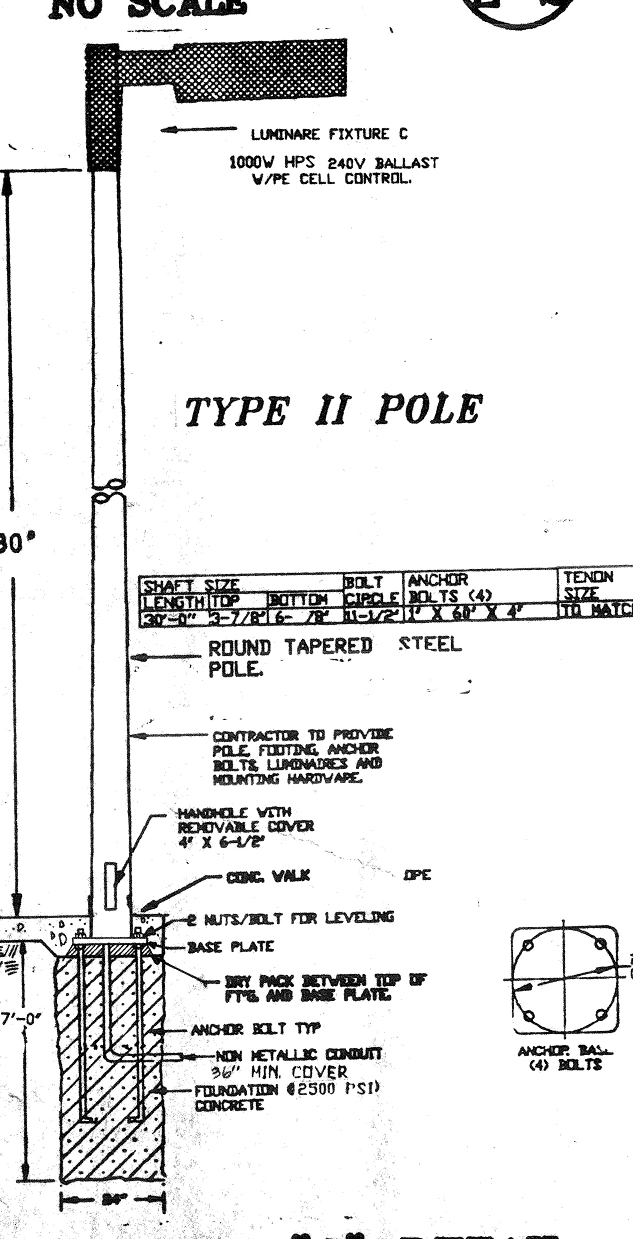

SHAFT SIZE LENGTH	TOP	BOTTOM	BOLT CIRCLE	ANCHOR BOLTS (4)	TENON SIZE
30'-0"	3-7/8"	6- 7/8"	11-1/2"	1" X 60" X 4"	TO MATCH FIXTURE

FIXTURE "C" DETAIL (5 / E-2)
NO SCALE

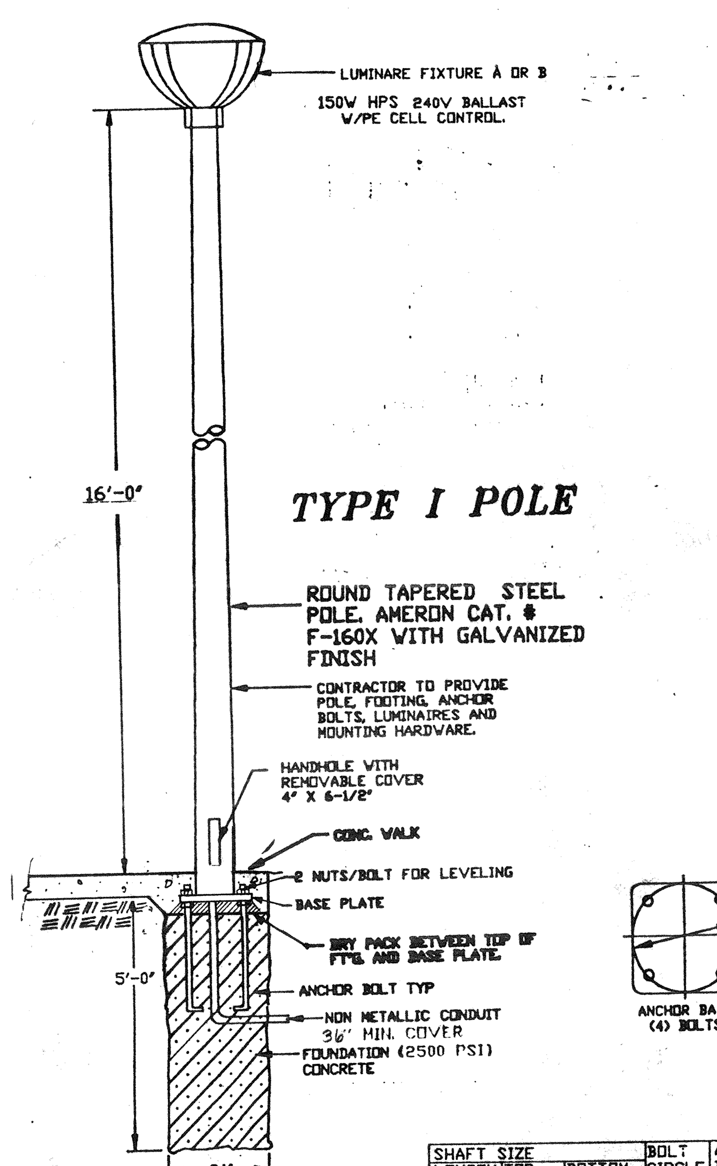

SHAFT SIZE LENGTH	TOP	BOTTOM	BOLT CIRCLE	ANCHOR BOLTS (4)	TENON SIZE	POLE NUMBER
16'-0"	3-7/8"	6"	9-1/2"	3/4" X 18" X 4"	2-3/8"OD X 3-1/4"	F-160-9

FIXTURE "A" OR "B" DETAIL (6 / E-2)
NO SCALE

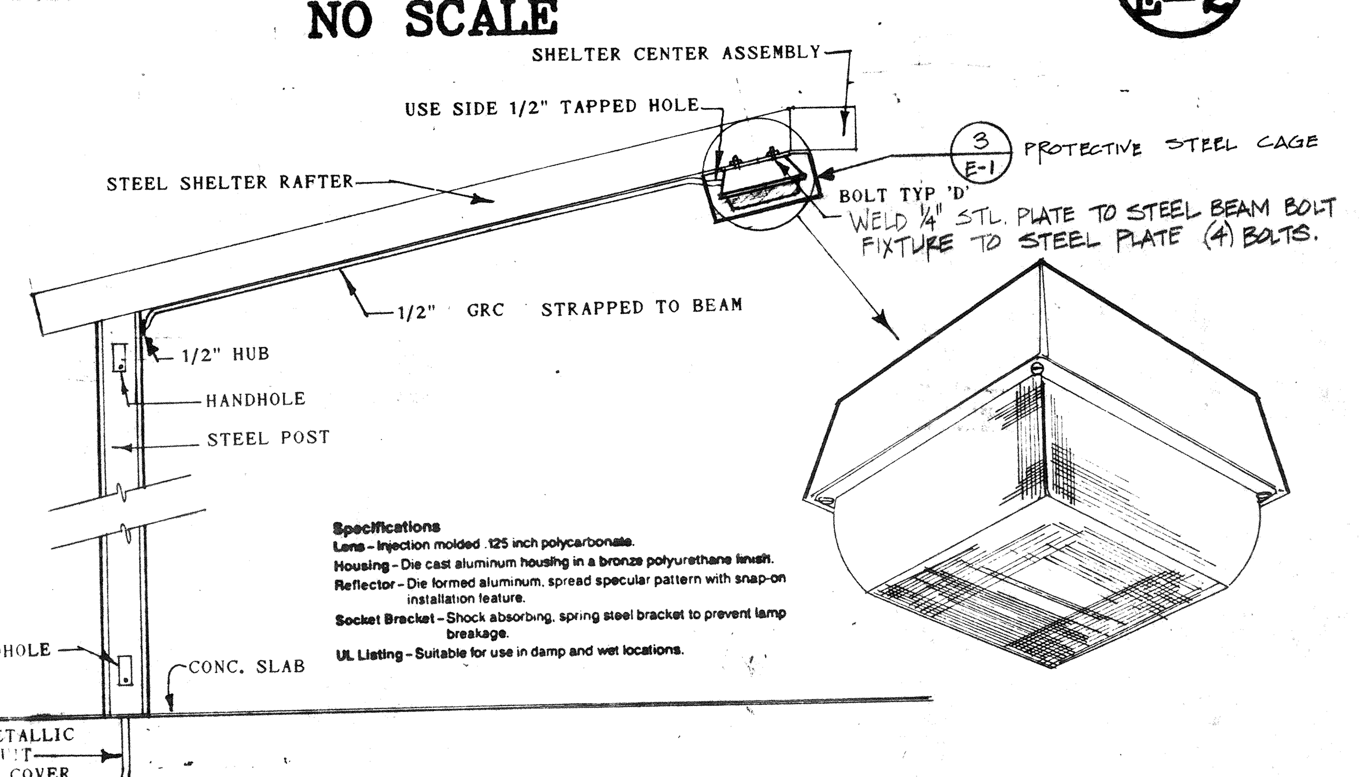

FIXTURE "D" DETAIL (7 / E-2)
NO SCALE

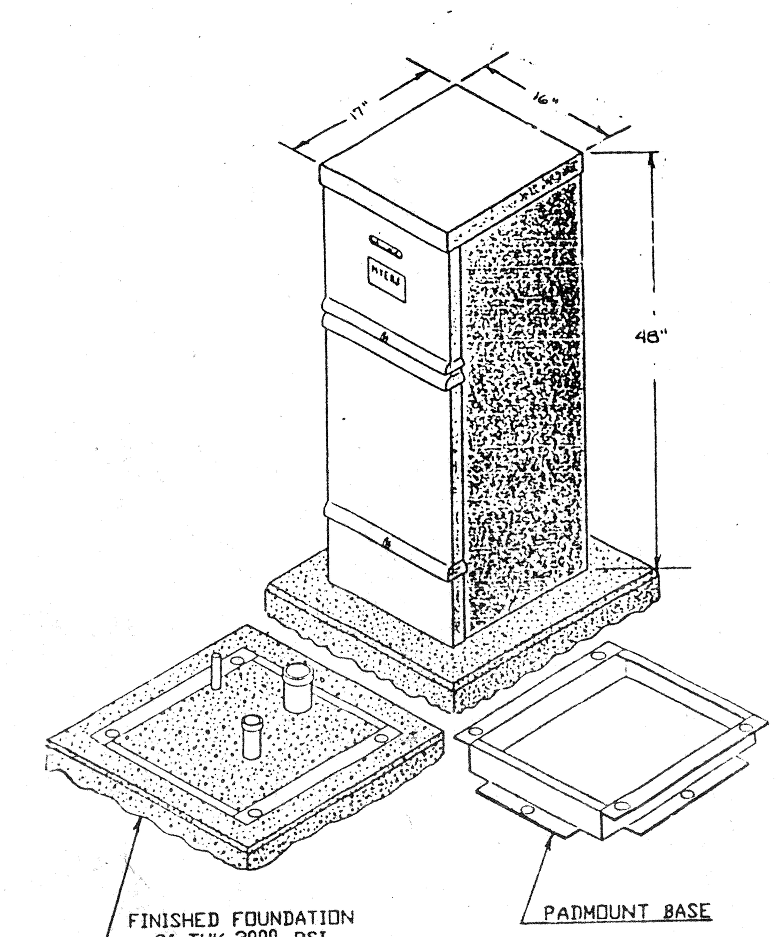

NOTES:
1. PROVIDE WITH GALVANIZED ANCHOR BOLTS. (NOT SHOWN)
2. PROVIDE IN NEMA 3R ENCLOSURE.
3. PROVIDE WITH PE CELLS AND SOCKET TO MOUNT INSIDE ENCLOSURE.
4. PROVIDE DUPLEX GFCI REC. AND LIGHT

SWITCHBOARD SERVICE PEDESTAL ELEVATION (9 / E-2)
NO SCALE

REGISTERED PROFESSIONAL ENGINEER JOSEPH M. NOLAN NO. E 9333 OCT 13 1989 ELECTRICAL STATE OF CALIFORNIA

FOR CONSTRUCTION

FEB 13 1991

LANDSCAPE ARCHITECTURE AND PLANNING
ASLA
Heimberger Hirsch

Project;
Rancho Loma Park
The City of Riverside
3900 Main Street
Riverside, CA. 92522

DREAM ENGINEERING, INC.
CONSULTING ELECTRICAL ENGINEERS
(619) 242-3369
18838 HWY. 18, SUITE 6, APPPLE VALLEY, CA 92307
REV-1 PER PLAN CHECK 6/19 '90

Date; July 1, 1990
Design;
Job No; 89014

Description;
SINGLE LINE DIAGRAM

Sheet 17 of 17
Dwg. # E-2
P - 0810

NOTE: CONTRACTOR SHALL PROVIDE AND INSTALL FLOOD LIGHTS, CONDUCTORS, AND CONTROL EQUIPMENT WITHIN THE EXISTING PANEL PER PROJECT SPECIFICATIONS AND AS LOCATED PER PLAN. CONTRACTOR WILL SIZE THE WIRES PER CODE AND PROVIDE CONDUITS BACK TO THE EX. PULL BOX. REFERENCE DRAWINGS WILL BE AVAILABLE FOR CONTRACTOR. EX. PANEL IS ABOUT 700 FEET AWAY.

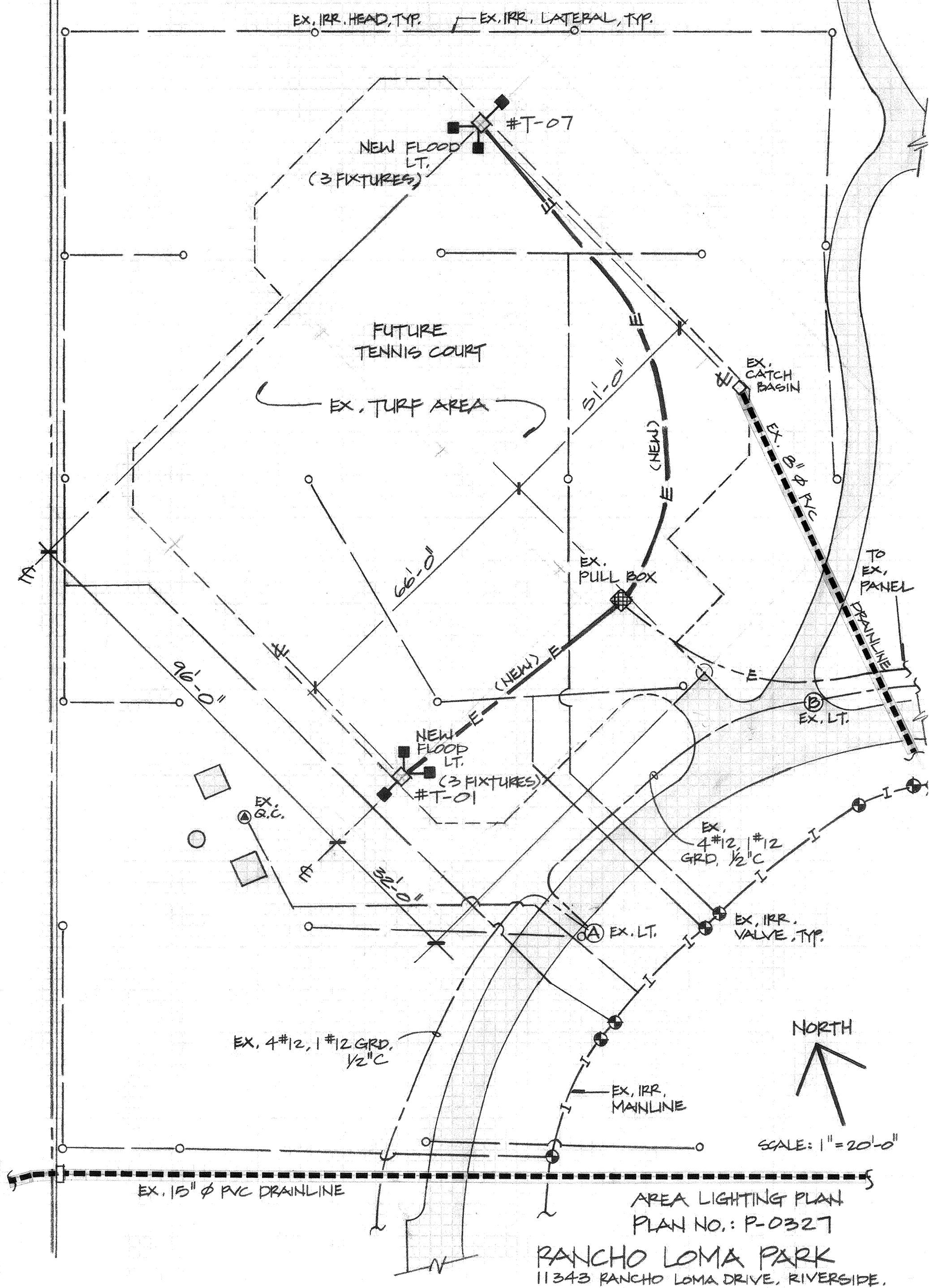

AREA LIGHTING PLAN
PLAN NO.: P-0327

RANCHO LOMA PARK
11343 RANCHO LOMA DRIVE, RIVERSIDE.