SHEET INDEX

M1.1	MECHANICAL – LEAD SHEET
M1.2	MECHANICAL – SCHEDULES
M1.3	MECHANICAL – TITLE 24
MA2.1A	MECHANICAL – BLDG. 'A' AREA (A) FLOOR PLAN
MA2.1B	MECHANICAL – BLDG. 'A' AREA (B) FLOOR PLAN
MA2.2A	MECHANICAL – BLDG. 'A' AREA (A) ZONE PLAN
MA2.2B	MECHANICAL – BLDG. 'A' AREA (B) ZONE PLAN
MA2.3A	MECHANICAL – BLDG. 'A' AREA (A) MECHANICAL PIPING PLAN
MA2.3B	MECHANICAL – BLDG. 'A' AREA (B) MECHANICAL PIPING PLAN
MA3.1	MECHANICAL – BLDG. 'A' ROOF PLAN
MB2.1A	MECHANICAL – BLDG. 'B' AREA (A) FLOOR PLAN
MB2.1B	MECHANICAL – BLDG. 'B' AREA (B) FLOOR PLAN
MB2.2A	MECHANICAL – BLDG 'B' AREA (A) ZONE PLAN
MB2.2B	MECHANICAL – BLDG. 'B' AREA (B) ZONE PLAN
MB2.3A	MECHANICAL – BLDG. 'B' AREA (A) MECHANICAL PIPING PLAN
MB2.3B	MECHANICAL – BLDG. 'B' AREA (B) MECHANICAL PIPING PLAN
MB3.1A	MECHANICAL – BLDG. 'B' ROOF PLAN
M4.1	MECHANICAL – HEATING HOT WATER DIAGRAM
M4.2	MECHANICAL – DETAILS
M4.3	MECHANICAL – DETAILS
M4.4	MECHANICAL – CONTROL DIAGRAMS
M4.5	MECHANICAL – WIRING DIAGRAMS

MECHANICAL INSULATION NOTES

1. INSULATE ALL SUPPLY & RETURN DUCTWORK INCLUDING DUCTS WITH SOUND INSULATIVE LINE LOCATED WITHIN A CONDITIONED OR INDIRECTLY CONDITIONED SPACE WITH A MINIMUM INSTALLED 'R'-VALUE OF 4.2. INSULATION PRODUCT SHALL INCLUDE A VAPOR BARRIER.

2. INSULATE ALL SUPPLY & RETURN DUCTWORK INCLUDING DUCTS WITH SOUND INSULATIVE LINER LOCATED WITHIN AN UNCONDITIONED SPACE (I.E. ABOVE THE BREEZEWAY OR ROOF) WITH A MINIMUM 'R'-VALUE OF 8.0. INSULATION PRODUCT SHALL INCLUDE A VAPOR BARRIER.

3. INSULATE ALL SUPPLY & RETURN HYDRONIC PIPING WITH A PRODUCT HAVING A THERMAL CONDUCTIVITY RANGE BETWEEN 0.25 AND 0.29 BTU-INCH PER HOUR SQUARE FOOT PER DEGREE F. ALL HYDRONIC PIPING ON THIS PROJECT SHALL BE INSULATED WITH A MINIMUM OF 1-1/2" OF PRODUCT.

4. INSULATE ALL LIQUID REFRIGERANT PIPING WITH A PRODUCT THAT CONFORMS WITH THE PROEJCT SPECIFICATIONS.

MECHANICAL GENERAL NOTES

1. ALL PIPING AND DUCTWORK SHALL BE INSULATED CONSISTENT WITH THE REQUIREMENTS OF SECTIONS 118, 123 AND 124 E.E.S. AND TABLE 6-D C.M.C.

2. ALL HVAC SYSTEMS SHALL MEET THE CONTROL REQUIREMENTS PER SECTIONS 112 AND 122 E.E.S..

3. ALL H.V.A.C. EQUIPMENT AND APPLIANCES SHALL MEET THE REQUIREMENTS PER SECTIONS 111-113, 115, AND 120-129 E.E.S..

4. INSULATION MATERIAL SHALL MEET THE CALIFORNIA QUALITY STANDARD PER SECTION 118 E.E.S..

5. DO NOT SCALE DRAWINGS – ALL DIMENSIONS AND JOBSITE CONDITIONS SHALL BE VERIFIED AT THE JOB SITE PRIOR TO START OF CONSTRUCTION AND/OR FABRICATION OF MATERIALS. IF DISCREPANCIES ARE ENCOUNTERED, THE ENGINEER SHALL BE NOTIFIED FOR CLARIFICATION.

6. SEE ARCHITECTURAL REFLECTED CEILING PLAN(S) FOR THE EXACT LOCATION OF CEILING DIFFUSERS, REGISTERS, AND GRILLES.

7. SEE ARCHITECTURAL DRAWINGS FOR ROOF ACCESS AND ANY ADDITIONAL ENERGY CONSERVATION NOTES.

8. ALL OUTLETS FOR FUTURE CONNECTIONS SHALL BE INSTALLED SO AS TO PERMIT EASY CONNECTION. COORDINATE DUCTWORK, STRUCTURAL CONDITIONS, AND ARCHITECTUAL LAYOUT.

9. WHERE SOUND INSULATION IS INDICATED, DUCT DIMENSIONS ARE NET CLEAR – e.g. AFTER INSULATION HAS BEEN INSTALLED.

10. AIR HANDLING DUCT SYSTEM WILL BE CONSTRUCTED, INSTALLED, MOUNTED AND SEALED IN ACCORDANCE WITH SECTIONS 601.1, 603 AND 604 OF THE CALIFORNIA MECHANICAL CODE (CMC) AND TITLE 24 – 6 – 118(d)3.

11. SEE PLUMBING DRAWINGS FOR CONDENSATE PIPING.

12. HOOD AND DUCT MATERIALS SHALL BE SUITABLE FOR THE INTENDED USE, PER SECTION 609 U.M.C. AND SHALL BE CONSTRUCTED OF STEEL.

13. PRODUCTS BEING EXHAUSTED THROUGH ALL HOOD/DUCT SYSTEMS ARE NON-FLAMMABLE.

14. ALL EXHAUST OUTLETS SHALL COMPLY WITH SECTION 609.10 U.M.C.

15. ALL EXHAUST DUCT SHALL BE GALVANIZED SHEET METAL. MINIMUM SHEET METAL THICKNESS SHALL BE PER UMC TABLE 5-B&C.

16. SPACING OF SUPPORTS FOR EXHAUST DUCTS SHALL NOT EXCEED 12 FEET FOR 8-INCH DUCT NOR 20 FEET FOR LARGER DUCTS.

17. PROVIDE SMOKE DETECTORS AT ALL AIR MOVING SYSTEMS EXCEEDING 2000 CFM AT SUPPLY AIR DUCTS.

MECHANICAL LEGEND

SYMBOL	ABBR.	DESCRIPTION
	POC/POD	POINT OF CONNECTION/POINT OF DISCONNECTION
		REMOVE EXIST. EQUIP. OR PIPES SHOWN HATCHED
		SUPPLY AIR DUCT 90° ELBOW UP
		RETURN AIR DUCT 90° ELBOW UP
		EXHAUST AIR DUCT 90° ELBOW UP
		SUPPLY AIR DUCT 90° ELBOW DOWN
		RETURN AIR DUCT 90° ELBOW DOWN
		EXHAUST AIR DUCT 90° ELBOW DOWN
		ROUND DUCT 90° ELBOW UP
		ROUND DUCT 90° ELBOW DOWN
		DOUBLE LINE FLEX DUCT
		SINGLE LINE FLEX DUCT
		PVC COATED OR STAINLESS STEEL DUCT
		DUCT WITH SOUND INSULATION
	F.C.	FLEXIBLE CONNECTION (DUCT)
	F.D.	FUSIBLE LINK FIRE DAMPER
	S.F.D.	COMBINATION SMOKE & FIRE DAMPER
	M.V.D.	MANUAL VOLUME DAMPER
	C.D.	CONTROL DAMPER
	B.D.D.	BACKDRAFT DAMPER
		SQUARE TO ROUND CONCENTRIC REDUCER
		SQUARE TO ROUND ECCENTRIC REDUCER
		OFFSET
		OGEE OFFSET
		MITERED OFFSET
		SQUARE END CAP
		ROUND END CAP
		ROUND TEE-WYE
		ROUND TEE-STRAIGHT
		ROUND TEE-CONICAL
		ROUND TEE-LOLOSS
		ROUND TEE-STRAIGHT LATERAL
		ROUND CROSS-STRAIGHT
		ROUND CROSS-CONICAL
		ROUND CROSS-LOLOSS
		ROUND CROSS-STRAIGHT LOLOSS
		ROUND TAP-STRAIGHT
		ROUND TAP-CONICAL
		ROUND TAP-LOLOSS
		ROUND TAP-STRAIGHT LATERAL
		SUPPLY AIR DIFFUSER
		RETURN AIR REGISTER
		EXHAUST AIR GRILLE
		SUPPLY AIR LINEAR DIFFUSER
		RETURN AIR LINEAR DIFFUSER
		DUCT SECTION – SUPPLY
		DUCT SECTION – RETURN
		DUCT SECTION – EXHAUST
XXcfm	D.L./U.C.	DOOR LOUVER / UNDERCUT
		AIR FLOW DIRECTION ARROW
(T)XX-##		ROOM THERMOSTAT & ZONE NUMBER
(S)XX-##		SENSOR NUMBER
(SD)	S.D.	SMOKE DETECTOR
		PIPE TEE UP / PIPE TEE DOWN
		90° PIPE ELBOW DOWN / 90° PIPE ELBOW UP
		90° PIPE ELBOW
		45° PIPE ELBOW
		PIPE TEE
		PIPE CROSS
		90° PIPE ELBOW DOWN TO 90° PIPE ELBOW OUT
		90° PIPE ELBOW DOWN TO 90° PIPE ELBOW OVER
		90° PIPE ELBOW DOWN TO PIPE TEE UP
		PIPE TEE DOWN TO 90° PIPE ELBOW OUT
		90° PIPE ELBOW DOWN TO TWO PIPE TEES
		PIPE TEE DOWN TO PIPE TEE
—CDWS—	CD.W.S.	CONDENSER WATER SUPPLY
—CDWR—	CD.W.R.	CONDENSER WATER RETURN
—CHWS—	CH.W.S.	CHILLED WATER SUPPLY
—CHWR—	CH.W.R.	CHILLED WATER RETURN
—HHWS—	H.H.W.S.	HEATING HOT WATER SUPPLY
—HHWR—	H.H.W.R.	HEATING HOT WATER RETURN
—RL—	R.L.	REFRIGERANT LIQUID
—RS—	R.S.	REFRIGERANT SUCTION
—RD—	R.D.	REFRIGERANT DISCHARGE
—CF—	C.F.	CHEMICAL FEED
—SW—	S.W.	SOFT COLD WATER
—ICW—	I.C.W.	INDUSTRIAL COLD WATER
		VALVE ON PIPE RISE OR DROP
	G.V.	GATE VALVE
	GA.V.	GATE ANGLE VALVE
	GL.V.	GLOBE VALVE
	B.V.	BALL VALVE
	M.B.V.	MOTORIZED BALL VALVE
	PL.V.	PLUG VALVE
	CH.V.	CHECK VALVE
	CH.S.V.	CHECK SPRING VALVE
	CH.SW.V.	CHECK SWING VALVE
	M.BF.V.	MOTOR OPERATED BUTTERFLY VALVE
	BF.V.	BUTTERFLY VALVE
	B.C.	BALANCING COCK
	A.AV.V.	AUTOMATIC AIR VENT VALVE

MECHANICAL LEGEND

SYMBOL	ABBR.	DESCRIPTION
	M.AV.V.	MANUAL AIR VENT VALVE
	S.V.	SOLENOID VALVE
	C.V.	TWO WAY CONTROL VALVE
	C.V.	THREE WAY CONTROL VALVE
	A.F.C.V.	AUTOMATIC FLOW CONTROL VALVE
	F.BL.V.	FLOW BALANCING VALVE
	N.V.	NEEDLE VALVE
	P.R.V.	PRESSURE REDUCING VALVE
	P.&T. R.V.	PRESSURE & TEMPERATURE RELIEF VALVE
		THREE WAY VALVE
	RED.	CONCENTRIC REDUCER / ECCENTRIC REDUCER
	STR.	STRAINER
	U.	UNION
		INLINE FLANGE CONNECTION
		FLANGE CONNECTION
		PIPE END CAP
		PIPE CONTINUATION
		PIPE FLOW DIRECTION ARROW
	P.G.	PRESSURE GAUGE
	TH.	THERMOMETER
Y OR ⊠	F.S.	FLOOR SINK
		PIPE SUPPORT
	T.W.	TEST WELL (PETE'S PLUG)
	F.C.	FLEXIBLE CONNECTION (PIPE)
	ABV.	ABOVE
	A.C.	AIR CONDITIONING OR AIR CHANGE
	A.D.	ACCESS DOOR
	A.F.F.	ABOVE FINISHED FLOOR
	A.P.	ACCESS PANEL
	A.P.D.	AIR PRESSURE DROP
	ARCH.	ARCHITECT OR ARCHITECTURAL
	B.D.D.	BACKDRAFT DAMPER
	BHP	BRAKE HORSE POWER
	B.O.D.	BOTTOM OF DUCT
	B.O.P.	BOTTOM OF PIPE
	B.T.U.	BRITISH THERMAL UNITS
	B.T.U.H.	BRITISH THERMAL UNITS PER HOUR
	C.A.	COMBUSTION AIR
	C.D.	CEILING DIFFUSER
	C.F.H.	CUBIC FEET PER HOUR
	C.F.M.	CUBIC FEET PER MINUTE
	CLG.	CEILING
	CLR.	CLEAR
	CONC.	CONCRETE
	CONN.	CONNECT OR CONNECTION
	CONT.	CONTINUATION
	D.B.	DRY BULB
ø	DIA.	DIAMETER
△		DIFFERENTIAL
	DN.	DOWN
	DPR.	DAMPER
	DWGS.	DRAWINGS
	E.A.	EXHAUST AIR
	E.A.G.	EXHAUST AIR GRILLE
	E.A.R.	EXHAUST AIR REGISTER
	E.A.T.	ENTERING AIR TEMPERATURE
	E.E.R.	ENERGY EFFICIENCY RATIO
	EFF.	EFFICIENCY
	ELECT.	ELECTRICAL
	ELEV.	ELEVATION
	ENT.	ENTERING
	E.P.	ELECTRIC – PNEUMATIC
	EX.	EXTERNAL
	EXH.	EXHAUST
(E)	EXIST.	EXISTING
	E.W.T.	ENTERING WATER TEMPERATURE
	°F	DEGREES FAHRENHEIT
	F.L.A.	FULL LOAD AMPS
	F.P.M.	FEET PER MINUTE
	FIN.	FINISH
	FLR.	FLOOR
	FT.	FEET OR FOOT
	G.I.	GALVINIZED IRON
	G.P.H.	GALLONS PER HOUR
	G.P.M.	GALLONS PER MINUTE
	GA.	GAUGE
	GAL.	GALLONS
	GALV.	GALVANIZED
	GR.	GRADE
	H	HEIGHT
	H.P.	HORSE POWER
	HD.	HEAD
	HDR.	HEADER
	H.O.A.	HAND – OFF – AUTOMATIC
	HR.	HOUR
	HTG.	HEATING
	IN.	INCHES
	K.W.	KILOWATTS
	L.	LENGTH OR LONG
	L.A.T.	LEAVING AIR TEMPERATURE
	L.R.A.	LOCKED ROTOR AMPS
	L.W.T.	LEAVING WATER TEMPERATURE
	LBS.	POUNDS
	LVG.	LEAVING
	LVR.	LOUVER
	M.A.	MIXED AIR
	M.B.H.	THOUSANDS OF BTU'S PER HOUR
	M.C.A.	MINIMUM CIRCUIT AMPACITY
	MAX.	MAXIMUM
	MECH.	MECHANICAL
	MFR.	MANUFACTURER
	MIN.	MINIMUM
	N.	NECK
	N.C.	NORMALLY CLOSED
	N.O.	NORMALLY OPEN
	N.P.S.H.	NET POSITIVE SUCTION HEAD
	N.T.S.	NOT TO SCALE

MECHANICAL LEGEND

SYMBOL	ABBR.	DESCRIPTION
	NC.	NOISE CRITERIA
	NO.	NUMBER
	O.A.	OUTSIDE AIR
	OPER.	OPERATING
	OSHPD	OFFICE OF STATEWIDE HEALTH PLANNING & DEVELOPMENT
	P.	PRESSURE
	P.D.	PRESSURE DROP
	P.S.I.	POUNDS PER SQUARE INCH ABSOLUTE
	P.S.I.G.	POUNDS PER SQUARE INCH GAUGE
	P.E.	PNEUMATIC – ELECTRIC
	PH.	PHASE
	PLBG.	PLUMBING
	QTY.	QUANTITY
	R.A.	RETURN AIR
	R.A.G.	RETURN AIR GRILLE
	R.A.R.	RETURN AIR REGISTER
	RE.A.G.	RELIEF AIR GRILLE
	R.E.	REDUCING ELBOW
	R.L.A.	RUNNING LOAD AMPS
	R.P.M.	REVOLUTIONS PER MINUTE
	R.P.B.P.	REDUCED PRESSURE BACKFLOW PREVENTOR
	REQ'D	REQUIRED
	S.A.	SUPPLY AIR
	S.A.G.	SUPPLY AIR GRILLE
	S.A.R.	SUPPLY AIR REGISTER
	S.F.M.	STATE FIRE MARSHALL
	S.I.	SOUND INSULATION
	S.P.	STATIC PRESSURE
	SENS.	SENSIBLE
	SHT.	SHEET
	SP.D.	SPLITTER DAMPER
	SPEC.	SPECIFICATION
	SQ.FT.	SQUARE FEET
	S.S.	STAINLESS STEEL
	STRUCT.	STRUCTURAL
	SUP.	SUPPLY
	T.	THROAT
	T.D.H.	TOTAL DISCHARGE HEAD
	T.S.P.	TOTAL STATIC PRESSURE
	TEMP.	TEMPERATURE
	TYP.	TYPICAL
	U.N.O.	UNLESS NOTED OTHERWISE
	U.T.R.	UP THRU ROOF
	V/PH/HZ	VOLTS/PHASE/HERTZ
	VEL.	VELOCITY
	VOL.	VOLUME
	V.T.R.	VENT THRU ROOF
	W.B.	WET BULB
	W.G.	WATER GAUGE
	W.M.S.	WIRE MESH SCREEN
	W.P.D.	WATER PRESSURE DROP
	WGT.	WEIGHT
	W/	WITH
(M)		FURNISHED & INSTALLED BY MECHANICAL
(ME)		FURNISHED BY MECHANICAL INSTALLED BY ELECTRICAL
(E)		FURNISHED & INSTALLED BY ELECTRICAL

SUPPLY DIFFUSER: (XX) X — NECK SIZE; Xcfm — AIR QUANTITY (C.F.M.); TYPE

EXHAUST / RETURN REGISTER: (XX) X — NECK SIZE; Xcfm — AIR QUANTITY (C.F.M.); TYPE

DETAIL CALL-OUT: DETAIL NUMBER; SHEET NUMBER

EQUIPMENT TAG: EQUIPMENT TYPE; EQUIPMENT ID

HMC ARCHITECTS
3270 INLAND EMPIRE BLVD.
ONTARIO, CALIFORNIA 91764
Telephone: 909 . 989 . 9979
Fax: 909 . 483 . 1400
www. hmcarchitects .com
Architecture Interiors Planning

Pacific Rim Mechanical
ENGINEERS & CONTRACTORS
7655 Convoy Court
San Diego, California 92111
(858) 974-6500 FAX: (858) 974-6501
www.prmech.com CA Lic. 814462

AS BUILT

Key Plan

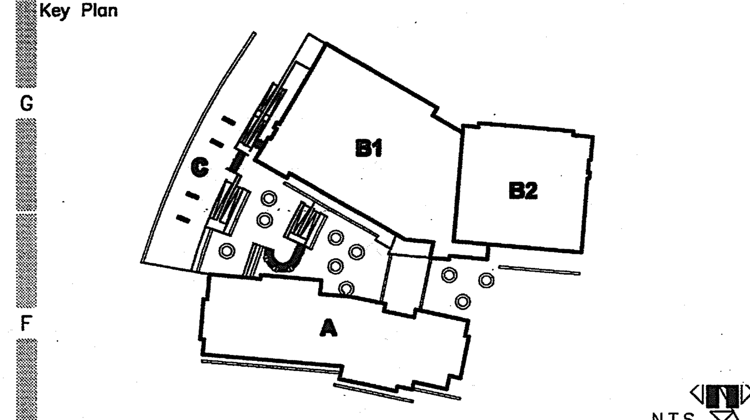

Consultant's Seal: REGISTERED PROFESSIONAL ENGINEER JOSEPH MUCHER No. M 30343 EXP: 6/09 MECHANICAL STATE OF CALIFORNIA

Agency Approval

Project Title

ORANGE TERRACE LIBRARY / COMMUNITY CENTER
PLAN CHECK NO. 07-1397
CITY OF RIVERSIDE DEVELOPMENT DEPARTMENT
3900 MAIN STREET, 5TH FLOOR
RIVERSIDE, CA 92522

HMC ARCHITECTS

No.	Revisions/Submissions	Date:
	Design Development Submittal	12/18/06
	Building Department Submittal	03/12/07
	Building Department Resubmittal	05/17/07
	Building Department Resubmittal / QA QC Review	06/22/07

Drawing Title

MECHANICAL - LEAD SHEET

Architect's Seal: LICENSED ARCHITECT CHRISTOPHER RICHARD TAYLOR NO. C-19759 REN. 02-24-07 STATE OF CALIFORNIA

Designed:	Project No. 2340001
Drawn:	Scale: AS NOTED
Checked:	Drawing No.
Reviewed:	M1.1
Date: 03-12-07	Sheet of ##

AIR HANDLING UNIT SCHEDULE

UNIT NO.	MANUFACTURER & MODEL NO.	SUPPLY FAN CFM	SUPPLY FAN TSP (IN.WG)	SUPPLY FAN ESP (IN.WG)	SUPPLY FAN TYPE	SUPPLY FAN NO. OF MOTORS	SUPPLY FAN HP (EACH)	RETURN FAN CFM	RETURN FAN TSP (IN)	RETURN FAN ESP (IN.WG)	RETURN FAN TYPE	RETURN FAN NO. OF MOTORS	RETURN FAN HP (EACH)	MIN OA (CFM)	DESIGN OA (CFM)	UNIT EER	AMBIENT AIR TEMP (DB/WB)°F
AH A	AAON RN-060	20,250	4.75	2.5	PLUG	2	20	20,250	1.65	1.5	PLUG	2	5	1,830	4,220	9.8	108/74
AH B1	AAON RN-060	18,850	4.54	2.5	PLUG	2	15	18,850	1.63	1.5	PLUG	2	5	1,775	5,900	9.8	108/74
AH B2	AAON RL-95	28,000	5.22	2.5	PLUG	1	50	28,000	1.85	1.5	PLUG	1	20	1,850	5,800	9.7	108/74

UNIT NO.	COOLING COIL CAP (MBH) SENS	COOLING COIL CAP (MBH) TOTAL	COOLING COIL EAT DB (°F)	COOLING COIL EAT WB (°F)	COOLING COIL LAT DB (°F)	COOLING COIL LAT WB (°F)	COOLING COIL AIR PD (IN. WG)	HEATING COIL CAP SENS (MBH)	HEATING COIL EAT DB(°F)	HEATING COIL LAT DB(°F)	HEATING COIL AIR PD (IN. WG)	HEATING COIL HHW DT(°F)	HEATING COIL GPM	HEATING COIL WTR PD (FT/HD)
AH A	529.5	574.2	81.1	64.5	53.2	53.1	0.53	698.2	30.0	59.6	0.33	180-150	43.2	4.3
AH B1	525.6	571.7	82.1	64.9	52.9	52.6	0.47	676.9	30.0	60.8	0.30	180-150	43.2	4.3
AH B2	767.7	830.1	81.0	65.0	54.7	54.7	0.69	887.3	30.0	57.0	0.21	180-150	57.3	2.9

UNIT NO.	FILTRATION (QUANT) SIZE	FILTRATION MERV	FILTRATION (QUANT) SIZE	FILTRATION MERV	UNIT ELECTRICAL V/PH/HZ	UNIT ELECTRICAL FLA	UNIT ELECTRICAL MCA	OPER WEIGHT (LBS)	REMARKS
AH A	(24)12x24x2	7	(24)12x24x4	13	460/3/60	156	162	9,000	(1)
AH B1	(24)12x24x2	7	(24)12x24x4	13	460/3/60	156	162	9,000	(1)
AH B2	(12)24x24x2 (4)20x24x2	7	(12)24x24x4 (4)20x24x4	13	460/3/60	253	269	20,000	(2)

(1) PROVIDE VARIABLE SPEED DRIVE WITH MANUAL BYPASS, LON COMMUNICATION, ECONOMIZER SECTION SIZED FOR FULL FLOW, COPPER TUBE AND ALUMINUM FIN COILS, GALVANIZED COIL CASINGS, DOUBLE WALL CONSTRUCTION, AIRFLOW SENSING ON OUTDOOR AIR INTAKE SECTION, MANUFACTURERS CUSTOM ROOF CURB, PREMIUM EFFICIENCY MOTORS, OUTDOOR CONSTRUCTION, HOT GAS BYPASS, SCROLL COMPRESSORS, R-410A REFRIGERANT AND SUPPLY AIR DUCT SMOKE DETECTOR FOR UNIT SHUT DOWN.

(2) PROVIDE VARIABLE SPEED DRIVE WITH MANUAL BYPASS, LON COMMUNICATION, ECONOMIZER SECTION SIZED FOR FULL FLOW, COPPER TUBE AND ALUMINUM FIN COILS, GALVANIZED COIL CASINGS, DOUBLE WALL CONSTRUCTION, AIRFLOW SENSING ON OUTDOOR AIR INTAKE SECTION, MANUFACTURERS CUSTOM ROOF CURB, PREMIUM EFFICIENCY MOTORS, OUTDOOR CONSTRUCTION, HOT GAS BYPASS, SCROLL COMPRESSORS, R-22 REFRIGERANT AND SUPPLY AIR DUCT SMOKE DETECTOR FOR UNIT SHUT DOWN.

CAV/VAV BOX SCHEDULE

UNIT NO.	MANUFACTURER & MODEL NO.	LOCATION	SERVICE	AIR QUANTITIES (CFM) MAXIMUM	AIR QUANTITIES (CFM) MINIMUM	INLET SIZE (DIA)	DISCHARGE PLENUM LENGTH (FT)	HEATING HOT WATER COIL MINIMUM BTUH	RATED CFM	RATED GPM	FLUID PD (FT.HD)	NO. OF ROWS	BRANCH PIPE SIZE	VALVE TYPE	WEIGHT LBS	REMARKS
VAV A1	PRICE SDV	-	CONF. ROOMS	1750	300	14	5	23.7	300	1.6	0.4	2	3/4	2-WAY	115	
VAV A2	PRICE SDV	-	NON FICTION	2400	440	16	5	33.4	440	2.3	0.9	2	3/4	2-WAY	120	
VAV A3	PRICE SDV	-	CHILDREN	2850	440	24x16	5	37.9	440	2.6	1.5	2	3/4	2-WAY	190	
VAV A4	PRICE SDV	-	STORY MEETING	3000	440	24x16	5	37.9	440	2.6	1.5	2	3/4	2-WAY	190	
VAV A5	PRICE SDV	-	FICTION PERIODICALS	2300	440	16	5	33.4	440	2.3	0.9	2	3/4	2-WAY	120	
VAV A6	PRICE SDV	-	TEEN/ MULTI	3050	570	24x16	5	46.4	570	3.2	2.3	2	3/4	2-WAY	190	
VAV A7	PRICE SDV	-	LOBBY/ OFFICE	2735	440	24x16	5	37.8	440	2.6	1.5	2	3/4	2-WAY	190	
VAV A8	PRICE SDV	-	FRIENDS/ STAFF	1480	440	14	5	31.5	440	2.1	0.8	2	3/4	2-WAY	115	
VAV A9	PRICE SDV	-	STAFF/ CUST.	1025	220	10	5	15.4	220	1.1	0.3	2	3/4	2-WAY	80	
CAV B1	PRICE SDV	-	KITCHEN PANTRY	1350	1350	14	5	35.4	1,350	2.4	1.1	1	3/4	2-WAY	115	CONSTANT VOLUME OPERATION
VAV B2	PRICE SDV	-	OFFICE	445	100	8	5	5.0	100	0.3	0.1	1	3/4	2-WAY	70	
VAV B3	PRICE SDV	-	BANQUET ROOM 115	2600	600	24x16	5	48.3	600	3.3	2.5	2	3/4	2-WAY	200	
VAV B4	PRICE SDV	-	BANQUET ROOM 115	2600	600	24x16	5	48.3	600	3.3	2.5	2	3/4	2-WAY	200	
VAV B5	PRICE SDV	-	BANQUET ROOM 115B	2100	600	16	5	41.9	600	2.9	1.5	2	3/4	2-WAY	130	
VAV B6	PRICE SDV	-	BANQUET ROOM 115B	2100	600	16	5	41.9	600	2.9	1.5	2	3/4	2-WAY	130	
VAV B7	PRICE SDV	-	MEETING	2050	500	16	5	36.8	500	2.5	1.1	2	3/4	2-WAY	130	
VAV B8	PRICE SDV	-	MULTI-PURPOSE	1200	300	12	5	21.6	300	1.5	0.6	2	3/4	2-WAY	95	
VAV B9	PRICE SDV	-	TEEN	1450	400	14	5	29.4	400	2.0	0.7	2	3/4	2-WAY	110	
VAV B10	PRICE SDV	-	CORRIDOR	3530	800	24x16	5	59.9	800	4.0	3.7	2	1	2-WAY	200	
VAV B11	PRICE SDV	-	LOWER LOBBY	4400	600	24x16	5	48.2	600	3.3	2.5	2	3/4	2-WAY	200	
VAV B12	PRICE SDV	-	UPPER LOBBY	3825	600	24x16	5	48.2	600	3.3	2.4	2	3/4	2-WAY	200	
CAV B13	PRICE SDV	-	OFFICE/RR	975	975	10	5	39.4	975	2.7	1.6	2	3/4	2-WAY	80	CONSTANT VOLUME OPERATION
VAV B14	PRICE SDV-RETRO	-	WEST GYM	9100	1800	42x42	-	95.5	1800	6.5	3.9	1	1	2-WAY	300	
VAV B15	PRICE SDV-RETRO	-	EAST GYM	9100	1800	42x42	-	95.5	1800	6.5	3.9	1	1	2-WAY	300	

EXHAUST FAN SCHEDULE

UNIT NO.	MANUFACTURER & MODEL NO.	LOCATION	SERVICE	TYPE	CFM	ARR	TSP (IN)	FAN RPM	ELECTRICAL HP	ELECTRICAL V/PH/HZ	OPER WEIGHT (LBS)	REMARKS
EF 1A	GREENHECK BSQ-120	BUILDING 'A' STAFF LOUNGE	BUILDING 'A' RESTROOMS	CENTRIFUGAL	1325	IN-LINE	1.0	1,661	3/4	460/60/3	125	PROVIDE BACKDRAFT DAMPER, EXTENDED LUBE LINES, MOTOR COVER, 1/2 INCH INSULATED HOUSING AND SPRING HANGING ISOLATORS
EF 2B	GREENHECK BSQ-90	ROOF	BUILDING 'B' KITCHEN	CENTRIFUGAL	1,025	IN-LINE	1.0	2,266	3/4	460/60/3	100	PROVIDE BACKDRAFT DAMPER, EXTENDED LUBE LINES, MOTOR COVER, 1/2 INCH INSULATED HOUSING AND SPRING HANGING ISOLATORS
EF 3B	GREENHECK BSQ-90	ROOF	BUILDING 'B' RESTROOMS	CENTRIFUGAL	1,075	IN-LINE	1.0	2,328	1.0	460/60/3	100	PROVIDE BACKDRAFT DAMPER, EXTENDED LUBE LINES, MOTOR COVER, 1/2 INCH INSULATED HOUSING AND SPRING HANGING ISOLATORS

PUMP SCHEDULE

UNIT NO.	MANUFACTURER & MODEL NO.	SERVICE	TYPE	GPM	FT HD	MIN EFF %	NPSH	ELECTRICAL V/PH/HZ	ELECTRICAL HP	ELECTRICAL RPM	OPER WEIGHT (LBS)	REMARKS
P 1	B&G SERIES 80 1-1/2x1-1/2x9-1/2	HHW	IN-LINE	87	70	53.5	9.3	460/3/60	5.0	1,750	200	PROVIDE TEFC PREMIUM EFFICIENCY MOTOR AND VFD WITH LON CHIP AND NEMA 3R HOUSING
P 2	B&G SERIES 80 1-1/2x1-1/2x9-1/2	HHW	IN-LINE	87	70	53.5	9.3	460/3/60	5.0	1,750	200	PROVIDE TEFC PREMIUM EFFICIENCY MOTOR AND VFD WITH LON CHIP AND NEMA 3R HOUSING

HEATING HOT WATER BOILER SCHEDULE

UNIT NO.	MANUFACTURER & MODEL NO.	LOCATION	SERVICE	BURNER TYPE	INPUT (MBH)	OUTPUT (MBH)	EWT (°F)	LWT (°F)	ΔT °F	ΔP FT	GPM	EFF %	V/PH/HZ	AMP DRAW	OPER WEIGHT (LBS)	REMARKS
B 1	RAYPACK HI-DELTA H-1262B	ROOF	BUILDINGS A & B	FAN-ASSIST LOW NOx	1,260	1,058	150	180	30	4.3	70	84	120/1/60	11.3	1,200	(1)

(1) PROVIDE WITH 4-STAGE MODULATION, OUTDOOR VENT CAP, COMBUSTION AIR FILTER KIT, FACTORY MOUNTED 1/2 HP CIRCULATION PUMP, 4-STAGE CONTROLLER, HIGH AND LOW LIMIT CONTROL AND REGULATORY COMPLIANCE FOR CITY AND COUNTY OF RIVERSIDE.

SOUND ATTENUATOR SCHEDULE

UNIT NO.	MANUFACTURER & MODEL NO.	SERVICE	CFM (MAX)	MAX AIR PD (IN)	FACE VELOCITY (FPM)	ATTENUATION IN OCTAVE BAND (db) 125	250	500	1000	2000	4000	SIZE WxHxL (IN)	QUANTITY	TOTAL OPER WEIGHT (LBS)	REMARKS
SA A1	IAC LFS	AH-A RETURN	4,050	0.41	810	25.8	43.6	48.8	49.8	35.0	25.4	24x30x84	5	900	MOUNT ATTENUATORS IN DUCT WITH REVERSE FLOW
SA A2	IAC LFS	AH-A SUPPLY	4,480	0.53	896	25.9	43.8	48.9	49.9	35.0	25.2	24x30x84	2	400	MOUNT ATTENUATORS IN DUCT WITH REVERSE FLOW
SA A3	IAC LFS	AH-A SUPPLY	5,645	0.56	940	25.9	43.9	48.9	49.9	35.0	25.1	36x24x84	2	500	MOUNT ATTENUATORS IN DUCT WITH REVERSE FLOW
SA B1	IAC LFS	AH-B1 SUPPLY	4,513	0.54	902	25.9	43.8	48.9	49.9	35.0	25.2	24x30x84	4	800	MOUNT ATTENUATORS IN DUCT WITH REVERSE FLOW
SA B2	IAC LFS	AH-B1 RETURN	4,513	0.54	902	25.9	43.8	48.9	49.9	35.0	25.2	24x30x84	4	800	MOUNT ATTENUATORS IN DUCT WITH REVERSE FLOW

SPLIT SYSTEM OUTDOOR SECTION SCHEDULE

UNIT NO.	MANUFACTURER & MODEL NO.	SERVICE	CAPACITY TOTAL (MBH)	AMBIENT AIR TEMP (°F) DB	EER	ELECTRICAL V/PH/HZ	COMPRESSOR QUANT	COMPRESSOR LRA	COMPRESSOR RLA	OUTDOOR FAN QUANT	OUTDOOR FAN RLA	MINIMUM CIRC AMPS	OPER WEIGHT (LBS)	REMARKS
CU A	CARRIER 38HDR048	ELEC/DATA RM A116	48	105	13.0	460/3/60	1	41.0	6.2	1	0.80	8.6	325	PROVIDE LOW AMBIENT KIT, SOLENOID VALVE, CRANKCASE HEATER AND HARD START KIT.
CU B	CARRIER 38HDR060	ELEC/PV BLDG. B	60	105	13.0	460/3/60	1	52.0	7.8	1	0.80	10.6	350	PROVIDE LOW AMBIENT KIT, SOLENOID VALVE, CRANKCASE HEATER AND HARD START KIT.

SPLIT SYSTEM INDOOR SECTION SCHEDULE

UNIT NO.	MANUFACTURER & MODEL NO.	SERVICE	CAPACITY SENSIBLE (MBH)	CAPACITY TOTAL (MBH)	SA (CFM)	MIN OA (CFM)	ESP	COIL DATA EAT DB (°F)	COIL DATA EAT WB (°F)	COIL DATA ROWS	COIL DATA AREA (SQ FT)	HP	ELECTRICAL MCA	ELECTRICAL V/PH/HZ	FILTER (QTY) SIZE	OPER WEIGHT (LBS)	REMARKS
FC A	CARRIER FX4C048	ELEC/DATA RM A116	41.4	41.4	1,650	-	0.30	75.0	62.0	-	-	3/4	7.5	208/1/60	-	200	PROVIDE TXV AND SPRING HANGING ISOLATORS
FC B	CARRIER FX4C060	ELEC/PV BLDG. B	52.0	52.0	1,990	-	0.30	75.0	62.0	-	-	3/4	7.5	208/1/60	-	250	PROVIDE TXV AND SPRING HANGING ISOLATORS

GRILLES, REGISTERS AND DIFFUSER SCHEDULE

UNIT NO.	MANUFACTURER & MODEL NO.	TYPE	SIZE (IN)	DESCRIPTION	REMARKS
S1	PRICE SCDA	SUPPLY	SEE PLANS	SQUARE CONE CEILING DIFFUSER WITH ADJUSTABLE PATTERN CONTROLLERS, STEEL CONSTRUCTION, STANDARD WHITE FINISH, 24x24 FRAME, BORDER (TYPE 3) SUITABLE FOR LAY-IN (T-BAR) CEILINGS. PROVIDE TRANSITIONS AS NECESSARY TO ACCOMODATE DIFFERENCE IN DUCT TO NECK SIZES.	
S2	PRICE SCDA	SUPPLY	SEE PLANS	SQUARE CONE CEILING DIFFUSER WITH ADJUSTABLE PATTERN CONTROLLERS, STEEL CONSTRUCTION, STANDARD WHITE FINISH, 20x20 FRAME, BORDER (TYPE 1) SUITABLE FOR GYP. BOARD (HARD-LID) CEILINGS. PROVIDE TRANSITIONS AS NECESSARY TO ACCOMODATE DIFFERENCE IN DUCT TO NECK SIZES.	
S3	PRICE SCDA	SUPPLY	SEE PLANS	SQUARE CONE CEILING DIFFUSER WITH ADJUSTABLE PATTERN CONTROLLERS, STEEL CONSTRUCTION, STANDARD WHITE FINISH, 24x24 FRAME, BORDER (TYPE 1) SUITABLE FOR GYP. BOARD (HARD-LID) CEILINGS. PROVIDE TRANSITIONS AS NECESSARY TO ACCOMODATE DIFFERENCE IN DUCT TO NECK SIZES.	
S4	AIR CONCEPTS APL SERIES	SUPPLY	SEE PLANS	ALUMINUM PUNKAH LOUVER WITH INTEGRAL STEEL MANUAL VOLUME DAMPER, FULLY GASKETED, ROUND DUCT CONNECTION, 70° ROTATION WITH STANDARD FINISH.	
S5	PRICE SDAI	SUPPLY	SEE PLANS	ALUMINUM LINEAR SLOT DIFFUSER, 5 FOOT SECTIONS, (2)1/2 INCH SLOTS, ADJUSTABLE PATTERN CONTROLLER, MITERED END FLANGE, SURFACE MOUNT FRAME TYPE "1B", INSULATED TAPERED PLENUM WITH 7ø INLET.	
S6	PRICE RCDA	SUPPLY	SEE PLANS	ROUND CONE CEILING DIFFUSER WITH A FULLY ADJUSTABLE ASSEMBLY, STEEL CONSTRUCTION, STANDARD WHITE FINISH, 10ø INLET NECK, BORDER/FRAME SUITABLE FOR GYP. BOARD (HARD-LID) CEILINGS.	
S7	PRICE RCDA	SUPPLY	SEE PLANS	ROUND CONE CEILING DIFFUSER WITH A FULLY ADJUSTABLE ASSEMBLY, STEEL CONSTRUCTION, STANDARD WHITE FINISH, 8ø INLET NECK, BORDER/FRAME SUITABLE FOR GYP. BOARD (HARD-LID) CEILINGS.	
S8	PRICE PDMC	SUPPLY	SEE PLANS	24x24 SUPPLY AIR DIFFUSER WITH ADJUSTABLE MODULAR COILS, STEEL CONSTRUCTION, PERFORATED HINGED FACE, STANDARD FINISH, ROUND INLET	
S9	PRICE 520	SUPPLY	SEE PLANS	RECTANGULAR GRILL WITH STEEL CONSTRUCTION, DOUBLE DEFLECTION BLADES, 3/4" BLADE SPACING, FRONT BLADE PARALLEL TO LONG DIMENSION (AS APPLICABLE), STANDARD FINISH, NARROW BORDER WITH BORDER FRAME FOR SIDE WALL SURFACE MOUNTING IN GYP. BOARD WALL. PROVIDE TRANSITIONS AS NECESSARY TO ACCOMMODATE DIFFERENCE IN DUCT TO NECK SIZES.	
S10	PRICE RDR	SUPPLY	SEE PLANS	RECT. GRILLE WITH STEEL CONSTRUCTION, DOUBLE DEFLECTION AND INDIVIDUALLY ADJUSTABLE BLADES, FRONT BLADES PARALLEL TO SHORT DIMENSION, GASKETING, ADJUSTABLE AIR SCOOP, STANDARD WHITE FINISH AND STANDARD 1-1/4" ANGLE BORDER SUITABLE FOR MOUNTING IN ROUND DUCT.	
S11	PRICE RCDA	SUPPLY	SEE PLANS	ROUND CONE CEILING DIFFUSER WITH A FULLY ADJUSTABLE ASSEMBLY, STEEL CONSTRUCTION, STANDARD WHITE FINISH, 14ø INLET NECK, BORDER/FRAME SUITABLE FOR GYP. BOARD (HARD-LID) CEILINGS.	
S12	PRICE 520	SUPPLY	SEE PLANS	RECTANGULAR GRILLE WITH STEEL CONSTRUCTION, DOUBLE DEFLECTION BLADES, 3/4" BLADE SPACING, FRONT BLADES PARALLEL TO LONG DIMENSION, STANDARD WHITE FINISH AND STANDARD 1-1/4" FLAT BORDER SUITABLE FOR SIDE WALL (DUCT) MOUNTING.	
R1	PRICE PDDR	RETURN	SEE PLANS	SQUARE CEILING REGISTER WITH STEEL CONSTRUCTION, STANDARD WHITE FINISH, BACKPAN WITH ROUND INLET, HINGED AND REMOVABLE 24x24 STEEL PERFORATED FLUSH FACE, BORDER (TYPE 3) SUITABLE FOR LAY-IN (T-BAR) CEILINGS.	
R2	PRICE 535	RETURN	SEE PLANS	RECTANGULAR GRILLE WITH STEEL CONSTRUCTION, SINGLE FIXED 45° DEFLECTION, 1/2" BLADE SPACING, BLADES PARALLEL TO SHORT DIMENSION, STANDARD WHITE FINISH AND STANDARD 1-1/4" FLAT BORDER SUITABLE FOR SIDE WALL SURFACE MOUNTING IN GYP. BOARD WALL. PROVIDE TRANSITIONS AS NECESSARY TO ACCOMODATE DIFFERENCE IN DUCT TO NECK SIZES.	
R3	PRICE 535	RETURN	SEE PLANS	RECTANGULAR GRILLE WITH STEEL CONSTRUCTION, SINGLE FIXED 45° DEFLECTION, 1/2" BLADE SPACING, BLADES PARALLEL TO LONG DIMENSION, STANDARD WHITE FINISH AND STANDARD 1-1/4" FLAT BORDER SUITABLE FOR SIDE WALL SURFACE MOUNTING IN GYP. BOARD WALL. PROVIDE TRANSITIONS AS NECESSARY TO ACCOMODATE DIFFERENCE IN DUCT TO NECK SIZES.	
R4	PRICE PDDR	RETURN	SEE PLANS	SQUARE CEILING REGISTER WITH STEEL CONSTRUCTION, STANDARD WHITE FINISH, BACKPAN WITH ROUND INLET, HINGED AND REMOVABLE 24x24 STEEL PERFORATED FLUSH FACE, BORDER (TYPE 1) SUITABLE FOR GYP. BOARD (HARD-LID) CEILINGS.	
R5	PRICE RCDE	RETURN	SEE PLANS	ROUND CONE CEILING REGISTER WITH STEEL CONSTRUCTION, STANDARD WHITE FINISH, 14ø INLET NECK, BORDER/FRAME SUITABLE FOR GYP. BOARD (HARD-LID) CEILINGS.	
E1	PRICE PDDR	EXHAUST	SEE PLANS	SQUARE CEILING REGISTER WITH STEEL CONSTRUCTION, STANDARD WHITE FINISH, BACKPAN WITH ROUND INLET, HINGED AND REMOVABLE 24x24 STEEL PERFORATED FLUSH FACE, BORDER (TYPE 3) SUITABLE FOR LAY-IN (T-BAR) CEILINGS.	
E2	PRICE PDDR	EXHAUST	SEE PLANS	SQUARE CEILING REGISTER WITH STEEL CONSTRUCTION, STANDARD WHITE FINISH, BACKPAN WITH ROUND INLET, HINGED AND REMOVABLE 16x16 STEEL PERFORATED FLUSH FACE, BORDER (TYPE 1) SUITABLE FOR GYP. BOARD (HARD-LID) CEILINGS.	
E3	PRICE 535	EXHAUST	SEE PLANS	RECTANGULAR GRILLE WITH STEEL CONSTRUCTION, SINGLE FIXED 45° DEFLECTION, 1/2" BLADE SPACING, BLADES PARALLEL TO SHORT DIMENSION, STANDARD WHITE FINISH AND STANDARD 1-1/4" FLAT BORDER SUITABLE FOR SIDE WALL SURFACE MOUNTING IN GYP. BOARD WALL. PROVIDE TRANSITIONS AS NECESSARY TO ACCOMODATE DIFFERENCE IN DUCT TO NECK SIZES.	
T1	PRICE PDDR	TRANSFER	SEE PLANS	SQUARE CEILING REGISTER WITH STEEL CONSTRUCTION, STANDARD WHITE FINISH, BACKPAN WITH ROUND INLET, HINGED AND REMOVABLE 24x24 STEEL PERFORATED FLUSH FACE, BORDER (TYPE 1) SUITABLE FOR GYP. BOARD (HARD-LID) CEILINGS.	

HMC ARCHITECTS
3270 INLAND EMPIRE BLVD.
ONTARIO, CALIFORNIA 91764
Telephone: 909 . 989 . 9979
Fax: 909 . 483 . 1400
www. hmcarchitects .com
Architecture Interiors Planning

Pacific Rim Mechanical
ENGINEERS & CONTRACTORS
7655 Convoy Court
San Diego, California 92111
(858) 974-6500 FAX: (858) 974-6501
www.prmech.com CA Lic. 814462

AS BUILT

Key Plan

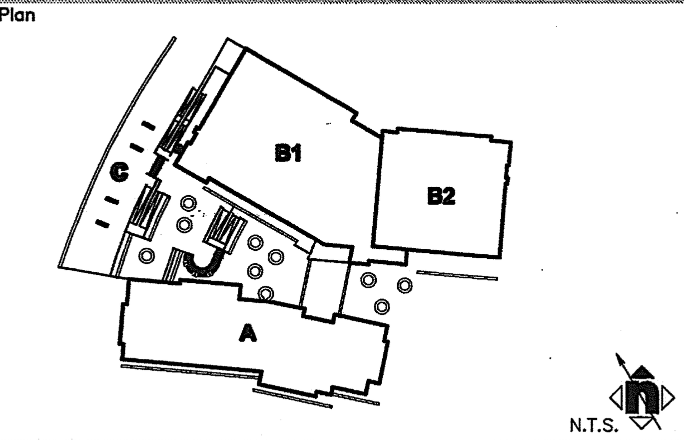

Consultant's Seal: REGISTERED PROFESSIONAL ENGINEER JOSEPH MUCHER No. M 30343 EXP: 6/09 MECHANICAL STATE OF CALIFORNIA

Agency Approval

Project Title

ORANGE TERRACE LIBRARY / COMMUNITY CENTER
PLAN CHECK NO. 07-1397
CITY OF RIVERSIDE DEVELOPMENT DEPARTMENT
3900 MAIN STREET, 5TH FLOOR
RIVERSIDE, CA 92522

HMC ARCHITECTS

No.	Revisions/Submissions	Date:
	Design Development Submittal	12/18/06
	Building Department Submittal	03/12/07
	Building Department Resubmittal	05/17/07
	Building Department Resubmittal / QA QC Review	06/22/07

Drawing Title

MECHANICAL - SCHEDULES

Architect's Seal: LICENSED ARCHITECT CHRISTOPHER RICHARD TAYLOR NO. C-19759 REN. 02-24-07 STATE OF CALIFORNIA

Designed:	Project No. 2340001
Drawn:	Scale: AS NOTED
Checked:	Drawing No.
Reviewed:	M1.2
Date: 03-12-07	Sheet of ##

CERTIFICATE OF COMPLIANCE (Part 1 of 2) ENV-1-C

PROJECT NAME: Orange Terrace Library and Community Center — DATE: 3/8/2007
PROJECT ADDRESS: 20010 Orange Terrace Parkway Riverside — Building Permit #
PRINCIPAL DESIGNER - ENVELOPE: Don Blackwell - PRM — TELEPHONE: 858-974-6500
DOCUMENTATION AUTHOR: Pacific Rim Mechanical — TELEPHONE: (858) 974-6500 — Checked by/Date, Enforcement Agency Use

GENERAL INFORMATION

DATE OF PLANS: 3-12-07 — BUILDING CONDITIONED FLOOR AREA: 36,753 Sq.Ft. — CLIMATE ZONE: 10

BUILDING TYPE: [X] NONRESIDENTIAL [ ] HIGH RISE RESIDENTIAL [ ] HOTEL/MOTEL GUEST ROOM [ ] RELOCATABLE- Indicate: [ ] Specific Climate - list: ____, or [ ] All Climates

PHASE OF CONSTRUCTION: [X] NEW CONSTRUCTION [ ] ADDITION [ ] ALTERATION [ ] UNCONDITIONED (File Affidavit)

METHOD OF ENVELOPE COMPLIANCE: [ ] COMPONENT (ENV-2-C) [X] OVERALL ENVELOPE (ENV-3-C) [ ] PERFORMANCE

STATEMENT OF COMPLIANCE

This Certificate of Compliance lists the building features and performance specifications needed to comply with Title 24, Parts 1 and 6 of the California Code of Regulations. This certificate applies only to building envelope requirements.

The documentation preparer hereby certifies that the document is accurate and complete.

DOCUMENTATION AUTHOR: Don Blackwell - PRM — SIGNATURE: [signature] — DATE: 3/8/07

The Principal Envelope Designer hereby certifies that the proposed building design represented in this set of construction documents is consistent with the other compliance forms and worksheets, with the specifications, and with any other calculations submitted with this permit application. The proposed building has been designed to meet the envelope requirements contained in Sections 110, 116 through 118, and 140, 142, 143 or 149 of Title 24, Part 6.

Please check one:

[X] I hereby affirm that I am eligible under the provisions of Division 3 of the Business and Professions Code to sign this document as the person responsible for its preparation; and that I am licensed in the state of California as a civil engineer or mechanical engineer, or I am a licensed architect.

[ ] I affirm that I am eligible under the exemption to Division 3 of the Business and Professions Code by Section 5537.2 or 6737.3 to sign this document as the person responsible for its preparation; and that I am a licensed contractor performing this work.

[ ] I affirm that I am eligible under Division 3 of the Business and Professions Code to sign this document because it pertains to a structure or type of work described as exempt pursuant to Business and Professions Code Sections 5537, 5538, and 6737.1.

PRINCIPAL ENVELOPE DESIGNER - NAME: Don Blackwell - PRM — SIGNATURE: [signature] — DATE: 3/8/07 — LIC. #: M31522

ENVELOPE MANDATORY MEASURES

Indicate location on plans of Note Block for Mandatory Measures: M0.1 & Arch.

ENVELOPE COMPLIANCE FORMS & WORKSHEETS (Check box if worksheet is included)

For detailed instructions on the use of this and all Energy Efficiency Standards compliance forms, please refer to the Nonresidential Manual published by the California Energy Commission.

- [X] ENV-1-C: Certificate of Compliance. Required on plans for all submittals. Part 2 may be incorporated in schedules on plans.
- [ ] ENV-2-C: Used Envelope Component compliance method
- [X] ENV-3-C: Used with Overall Envelope Compliance method
- [X] ENV-4-C: Optional. Use for minimum skylight requirements for large enclosed spaces

EnergyPro 4.3 by EnergySoft — User Number: 4968 — Job Number: 8-06-3465 — Page:1 of 39

CERTIFICATE OF COMPLIANCE (Part 2 of 2) ENV-1-C

PROJECT NAME: Orange Terrace Library and Community Center — DATE: 3/8/2007

OPAQUE SURFACES

#	Surface Type	Area	U-Fac.	Insulation Cav.	Insulation Cont.	Act. Azm.	Tilt	Cond.* Status	Joint Appendix IV Reference	Location / Comments
61	Roof	590	0.036	R-30	R-0.0	0	0	New	02-A9	Kitchen/Pantry Z1B1
62	Wall	685	0.074	R-19	R-0.0	60	90	New	09-A5	Kitchen/Pantry Z1B1
63	Wall	245	0.074	R-19	R-0.0	330	90	New	09-A5	Kitchen/Pantry Z1B1
64	Roof	65	0.036	R-30	R-0.0	0	0	New	02-A9	Kitchen/Pantry Z1B1
65	Roof	265	0.036	R-30	R-0.0	0	0	New	02-A9	Office Areas Z2B1
66	Roof	200	0.036	R-30	R-0.0	0	0	New	02-A9	Office Areas Z2B1
67	Roof	90	0.036	R-30	R-0.0	0	0	New	02-A9	Office Areas Z2B1
68	Wall	340	0.074	R-19	R-0.0	60	90	New	09-A5	Office Areas Z2B1
69	Wall	1,220	0.074	R-19	R-0.0	330	90	New	09-A5	Banquet Z3/4B1
70	Door	85	0.500	Insul	R-0.0	330	90	New	28-A3	Banquet Z3/4B1
71	Roof	2,805	0.036	R-30	R-0.0	0	0	New	02-A9	Banquet Z3/4B1
72	Roof	2,610	0.036	R-30	R-0.0	0	0	New	02-A9	Banquet Z5/6B1
73	Roof	1,260	0.036	R-30	R-0.0	0	0	New	02-A9	Meeting Rm Z7B1
74	Roof	715	0.036	R-30	R-0.0	0	0	New	02-A9	Multipurpose Rm Z8B1
75	Roof	895	0.036	R-30	R-0.0	0	0	New	02-A9	Teen Room Z9B1
76	Wall	240	0.074	R-19	R-0.0	310	90	New	09-A5	Corridor Z10B1
77	Wall	384	0.074	R-19	R-0.0	240	90	New	09-A5	Corridor Z10B1
78	Roof	828	0.036	R-30	R-0.0	180	9	New	02-A9	Corridor Z10B1
79	Wall	660	0.074	R-19	R-0.0	240	90	New	09-A5	Corridor Z10B1
80	Roof	840	0.036	R-30	R-0.0	0	0	New	02-A9	Lower Lobby Z11B2

* N, E, A, R (New, Existing, Altered, Removed)

FENESTRATION SURFACES

[ ] More than or equal to 10,000 sq.ft. of site-built fenestration area must include a label certificate either issued by NFRC or provide a CEC Default Label Certificate using the default U-factors from Standards Table 116-A and B. Certificate shall be filed in the contractor's project office during construction and in the building manager's office after construction

#	Type	Area	U-Fac.[1]	SHGC[2]	Act. Azm.	Cond. Stat.	Glazing Type	Location/ Comments

(1) U-factor Type: 116-A Default Table from Standards, Table NI-1 Default Table from the ACM Manual Appendix, NFRC Labeled value.
(2) SHGC Type: 116-B Default Table from Standards, COG Center of Glass, NFRC Labeled Value

EXTERIOR SHADING

#	Exterior Shade Type	SHGC	Window Hgt. Wd.	Overhang Len. Hgt. LExt. RExt.	Left Fin Dist. Len. Hgt.	Right Fin Dist. Len. Hgt.

MINIMUM SKYLIGHT AREA FOR LARGE ENCLOSED SPACES

[ ] The proposed building is in climate zones 2 through 15 and contains an enclosed space with floor area greater than 25,000 ft2, a ceiling height greater than 15 feet, and an LPD for general lighting of at least 0.5 W/ft2. See Section 143(c). If this box is checked, ENV-4-C must be filled out, when submitting under the Prescriptive Compliance Approach.

EnergyPro 4.3 by EnergySoft — User Number: 4968 — Job Number: 8-06-3465 — Page:5 of 39

CERTIFICATE OF COMPLIANCE (Part 2 of 2) ENV-1-C

PROJECT NAME: Orange Terrace Library and Community Center — DATE: 3/8/2007

OPAQUE SURFACES

#	Surface Type	Area	U-Fac.	Insulation Cav.	Insulation Cont.	Act. Azm.	Tilt	Cond.* Status	Joint Appendix IV Reference	Location / Comments
101	Roof	2,245	0.036	R-30	R-0.0	215	13	New	02-A9	East Gym Z15B2
102	Roof	1,998	0.036	R-30	R-0.0	35	13	New	02-A9	East Gym Z15B2
103	Wall	645	0.074	R-19	R-0.0	35	90	New	09-A5	East Gym Z15B2
104	Wall	1,230	0.074	R-19	R-0.0	125	90	New	09-A5	East Gym Z15B2
105	Door	15	0.500	Insul	R-0.0	125	90	New	28-A3	East Gym Z15B2
106	Wall	948	0.074	R-19	R-0.0	215	90	New	09-A5	East Gym Z15B2
107	Door	15	0.500	Insul	R-0.0	215	90	New	28-A3	East Gym Z15B2
108	Wall	156	0.074	R-19	R-0.0	222	90	New	09-A5	AC-1 Data/Elec
109	Roof	156	0.036	R-30	R-0.0	222	21	New	02-A9	AC-1 Data/Elec
110	Wall	156	0.074	R-19	R-0.0	222	90	New	09-A5	AC-2 Data/Elec
111	Roof	156	0.036	R-30	R-0.0	222	21	New	02-A9	AC-2 Data/Elec
112	Roof	156	0.036	R-30	R-0.0	222	21	New	02-A9	AC-3 PV Equip
113	Wall	156	0.074	R-19	R-0.0	222	90	New	09-A5	AC-3 PV Equip

* N, E, A, R (New, Existing, Altered, Removed)

FENESTRATION SURFACES

[ ] More than or equal to 10,000 sq.ft. of site-built fenestration area must include a label certificate either issued by NFRC or provide a CEC Default Label Certificate using the default U-factors from Standards Table 116-A and B. Certificate shall be filed in the contractor's project office during construction and in the building manager's office after construction

#	Type	Area	U-Fac.[1]	SHGC[2]	Act. Azm.	Cond. Stat.	Glazing Type	Location/ Comments

(1) U-factor Type: 116-A Default Table from Standards, Table NI-1 Default Table from the ACM Manual Appendix, NFRC Labeled value.
(2) SHGC Type: 116-B Default Table from Standards, COG Center of Glass, NFRC Labeled Value

EXTERIOR SHADING

#	Exterior Shade Type	SHGC	Window Hgt. Wd.	Overhang Len. Hgt. LExt. RExt.	Left Fin Dist. Len. Hgt.	Right Fin Dist. Len. Hgt.

MINIMUM SKYLIGHT AREA FOR LARGE ENCLOSED SPACES

[ ] The proposed building is in climate zones 2 through 15 and contains an enclosed space with floor area greater than 25,000 ft2, a ceiling height greater than 15 feet, and an LPD for general lighting of at least 0.5 W/ft2. See Section 143(c). If this box is checked, ENV-4-C must be filled out, when submitting under the Prescriptive Compliance Approach.

EnergyPro 4.3 by EnergySoft — User Number: 4968 — Job Number: 8-06-3465 — Page:7 of 39

CERTIFICATE OF COMPLIANCE (Part 2 of 2) ENV-1-C

PROJECT NAME: Orange Terrace Library and Community Center — DATE: 3/8/2007

OPAQUE SURFACES

#	Surface Type	Area	U-Fac.	Insulation Cav.	Insulation Cont.	Act. Azm.	Tilt	Cond.* Status	Joint Appendix IV Reference	Location / Comments
81	Wall	72	0.074	R-19	R-0.0	240	90	New	09-A5	Lower Lobby Z11B2
82	Wall	725	0.074	R-19	R-0.0	215	90	New	09-A5	Lower Lobby Z11B2
83	Roof	1,115	0.036	R-30	R-0.0	0	0	New	02-A9	Upper Lobby Z12B2
84	Wall	225	0.074	R-19	R-0.0	60	90	New	09-A5	Upper Lobby Z12B2
85	Roof	305	0.036	R-30	R-0.0	0	13	New	02-A9	Upper Lobby Z12B2
86	Wall	450	0.074	R-19	R-0.0	35	90	New	09-A5	Upper Lobby Z12B2
87	Wall	430	0.074	R-19	R-0.0	125	90	New	09-A5	Upper Lobby Z12B2
88	Roof	265	0.036	R-30	R-0.0	35	13	New	02-A9	Upper Lobby Z12B2
89	Wall	395	0.074	R-19	R-0.0	35	90	New	09-A5	Upper Lobby Z12B2
90	Wall	125	0.074	R-19	R-0.0	305	90	New	09-A5	Upper Lobby Z12B2
91	Roof	505	0.036	R-30	R-0.0	0	0	New	02-A9	Office RRs Z13B2
92	Wall	165	0.074	R-19	R-0.0	125	90	New	09-A5	Office RRs Z13B2
93	Wall	410	0.074	R-19	R-0.0	215	90	New	09-A5	Office RRs Z13B2
94	Roof	2,245	0.036	R-30	R-0.0	215	13	New	02-A9	West Gym Z14B2
95	Roof	1,998	0.036	R-30	R-0.0	35	13	New	02-A9	West Gym Z14B2
96	Wall	645	0.074	R-19	R-0.0	35	90	New	09-A5	West Gym Z14B2
97	Wall	1,230	0.074	R-19	R-0.0	125	90	New	09-A5	West Gym Z14B2
98	Door	15	0.500	Insul	R-0.0	125	90	New	28-A3	West Gym Z14B2
99	Wall	948	0.074	R-19	R-0.0	215	90	New	09-A5	West Gym Z14B2
100	Door	15	0.500	Insul	R-0.0	215	90	New	28-A3	West Gym Z14B2

* N, E, A, R (New, Existing, Altered, Removed)

FENESTRATION SURFACES

[ ] More than or equal to 10,000 sq.ft. of site-built fenestration area must include a label certificate either issued by NFRC or provide a CEC Default Label Certificate using the default U-factors from Standards Table 116-A and B. Certificate shall be filed in the contractor's project office during construction and in the building manager's office after construction

#	Type	Area	U-Fac.[1]	SHGC[2]	Act. Azm.	Cond. Stat.	Glazing Type	Location/ Comments

(1) U-factor Type: 116-A Default Table from Standards, Table NI-1 Default Table from the ACM Manual Appendix, NFRC Labeled value.
(2) SHGC Type: 116-B Default Table from Standards, COG Center of Glass, NFRC Labeled Value

EXTERIOR SHADING

#	Exterior Shade Type	SHGC	Window Hgt. Wd.	Overhang Len. Hgt. LExt. RExt.	Left Fin Dist. Len. Hgt.	Right Fin Dist. Len. Hgt.

MINIMUM SKYLIGHT AREA FOR LARGE ENCLOSED SPACES

[ ] The proposed building is in climate zones 2 through 15 and contains an enclosed space with floor area greater than 25,000 ft2, a ceiling height greater than 15 feet, and an LPD for general lighting of at least 0.5 W/ft2. See Section 143(c). If this box is checked, ENV-4-C must be filled out, when submitting under the Prescriptive Compliance Approach.

EnergyPro 4.3 by EnergySoft — User Number: 4968 — Job Number: 8-06-3465 — Page:6 of 39

CERTIFICATE OF COMPLIANCE (Part 2 of 2) ENV-1-C

PROJECT NAME: Orange Terrace Library and Community Center — DATE: 3/8/2007

OPAQUE SURFACES

#	Surface Type	Area	U-Fac.	Insulation Cav.	Insulation Cont.	Act. Azm.	Tilt	Cond.* Status	Joint Appendix IV Reference	Location / Comments
41	Wall	130	0.074	R-19	R-0.0	222	90	New	09-A5	VAV-8A
42	Roof	192	0.036	R-30	R-0.0	222	21	New	02-A9	VAV-8A
43	Roof	115	0.036	R-30	R-0.0	222	21	New	02-A9	VAV-8A
44	Wall	36	0.074	R-19	R-0.0	222	90	New	09-A5	VAV-8A
45	Wall	104	0.074	R-19	R-0.0	312	90	New	09-A5	VAV-8A
46	Door	48	0.700	None	R-0.0	312	90	New	28-A2	VAV-8A
47	Roof	195	0.036	R-30	R-0.0	222	21	New	02-A9	VAV-8A
48	Roof	90	0.036	R-30	R-0.0	222	21	New	02-A9	VAV-8A
49	Roof	130	0.036	R-30	R-0.0	42	21	New	02-A9	VAV-8A
50	Roof	150	0.036	R-30	R-0.0	222	21	New	02-A9	VAV-8A
51	Wall	420	0.074	R-19	R-0.0	312	90	New	09-A5	VAV-9A
52	Roof	240	0.036	R-30	R-0.0	42	21	New	02-A9	VAV-9A
53	Roof	180	0.036	R-30	R-0.0	222	21	New	02-A9	VAV-9A
54	Wall	180	0.074	R-19	R-0.0	312	90	New	09-A5	VAV-9A
55	Wall	105	0.074	R-19	R-0.0	42	90	New	09-A5	VAV-9A
56	Roof	100	0.036	R-30	R-0.0	42	21	New	02-A9	VAV-9A
57	Roof	780	0.036	R-30	R-0.0	0	0	New	02-A9	Kitchen/Pantry Z1B1
58	Wall	830	0.074	R-19	R-0.0	60	90	New	09-A5	Kitchen/Pantry Z1B1
59	Door	45	0.500	Insul	R-0.0	60	90	New	28-A3	Kitchen/Pantry Z1B1
60	Wall	105	0.074	R-19	R-0.0	150	90	New	09-A5	Kitchen/Pantry Z1B1

* N, E, A, R (New, Existing, Altered, Removed)

FENESTRATION SURFACES

[ ] More than or equal to 10,000 sq.ft. of site-built fenestration area must include a label certificate either issued by NFRC or provide a CEC Default Label Certificate using the default U-factors from Standards Table 116-A and B. Certificate shall be filed in the contractor's project office during construction and in the building manager's office after construction

#	Type		Area	U-Fac.[1]		SHGC[2]		Act. Azm.	Cond. Stat.	Glazing Type	Location/ Comments
27	Window	Front (NE)	320	0.570	NI-1	0.38	COG	60	New	PPG SOLARBAN 60 (2) Clear	Upper Lobby Z12B2
28	Window	Rear (SW)	20	0.570	NI-1	0.38	COG	215	New	PPG SOLARBAN 60 (2) Clear	Office RRs Z13B2
29	Skylight	Rear (SW)	335	0.210	NFRC	0.10	NFRC	215	New	Orange Terrace PV Skylight	West Gym Z14B2
30	Window	Front (NE)	188	0.570	NI-1	0.38	COG	35	New	PPG SOLARBAN 60 (2) Clear	West Gym Z14B2
31	Window	Rear (SW)	36	0.570	NI-1	0.38	COG	215	New	PPG SOLARBAN 60 (2) Clear	West Gym Z14B2
32	Window	Rear (SW)	28	0.570	NI-1	0.38	COG	215	New	PPG SOLARBAN 60 (2) Clear	West Gym Z14B2
33	Skylight	Rear (SW)	335	0.210	NFRC	0.10	NFRC	215	New	Orange Terrace PV Skylight	East Gym Z15B2
34	Window	Front (NE)	188	0.570	NI-1	0.38	COG	35	New	PPG SOLARBAN 60 (2) Clear	East Gym Z15B2
35	Window	Rear (SW)	36	0.570	NI-1	0.38	COG	215	New	PPG SOLARBAN 60 (2) Clear	East Gym Z15B2
36	Window	Rear (SW)	28	0.570	NI-1	0.38	COG	215	New	PPG SOLARBAN 60 (2) Clear	East Gym Z15B2

(1) U-factor Type: 116-A Default Table from Standards, Table NI-1 Default Table from the ACM Manual Appendix, NFRC Labeled value.
(2) SHGC Type: 116-B Default Table from Standards, COG Center of Glass, NFRC Labeled Value

EXTERIOR SHADING

#	Exterior Shade Type	SHGC	Window Hgt. Wd.	Overhang Len. Hgt. LExt. RExt.	Left Fin Dist. Len. Hgt.	Right Fin Dist. Len. Hgt.
27	None	0.76				
28	None	0.76				
29	None	1.00				
30	None	0.76				
31	None	0.76				
32	None	0.76				
33	None	1.00				
34	None	0.76				
35	None	0.76				
36	None	0.76				

MINIMUM SKYLIGHT AREA FOR LARGE ENCLOSED SPACES

[ ] The proposed building is in climate zones 2 through 15 and contains an enclosed space with floor area greater than 25,000 ft2, a ceiling height greater than 15 feet, and an LPD for general lighting of at least 0.5 W/ft2. See Section 143(c). If this box is checked, ENV-4-C must be filled out, when submitting under the Prescriptive Compliance Approach.

EnergyPro 4.3 by EnergySoft — User Number: 4968 — Job Number: 8-06-3465 — Page:4 of 39

CERTIFICATE OF COMPLIANCE (Part 2 of 2) ENV-1-C

PROJECT NAME: Orange Terrace Library and Community Center — DATE: 3/8/2007

OPAQUE SURFACES

#	Surface Type	Area	U-Fac.	Insulation Cav.	Insulation Cont.	Act. Azm.	Tilt	Cond.* Status	Joint Appendix IV Reference	Location / Comments
21	Roof	480	0.036	R-30	R-0.0	35	25	New	02-A9	VAV-5A
22	Wall	380	0.074	R-19	R-0.0	305	90	New	09-A5	VAV-5A
23	Wall	140	0.074	R-19	R-0.0	305	90	New	09-A5	VAV-6A
24	Wall	140	0.074	R-19	R-0.0	125	90	New	09-A5	VAV-6A
25	Wall	1,020	0.074	R-19	R-0.0	35	90	New	09-A5	VAV-6A
26	Roof	1,600	0.036	R-30	R-0.0	0	0	New	02-A9	VAV-6A
27	Wall	403	0.074	R-19	R-0.0	35	90	New	09-A5	VAV-6A
28	Roof	2,160	0.036	R-30	R-0.0	35	25	New	02-A9	VAV-6A
29	Roof	1,055	0.036	R-30	R-0.0	132	21	New	02-A9	VAV-7A
30	Roof	312	0.036	R-30	R-0.0	222	21	New	02-A9	VAV-7A
31	Wall	105	0.074	R-19	R-0.0	42	90	New	09-A5	VAV-7A
32	Roof	90	0.036	R-30	R-0.0	42	21	New	02-A9	VAV-7A
33	Roof	65	0.036	R-30	R-0.0	42	21	New	02-A9	VAV-7A
34	Wall	75	0.074	R-19	R-0.0	132	90	New	09-A5	VAV-7A
35	Door	21	0.700	None	R-0.0	132	90	New	28-A2	VAV-7A
36	Wall	484	0.074	R-19	R-0.0	42	90	New	09-A5	VAV-7A
37	Roof	460	0.036	R-30	R-0.0	42	21	New	02-A9	VAV-7A
38	Wall	141	0.074	R-19	R-0.0	222	90	New	09-A5	VAV-8A
39	Roof	156	0.036	R-30	R-0.0	222	21	New	02-A9	VAV-8A
40	Wall	72	0.074	R-19	R-0.0	312	90	New	09-A5	VAV-8A

* N, E, A, R (New, Existing, Altered, Removed)

FENESTRATION SURFACES

[ ] More than or equal to 10,000 sq.ft. of site-built fenestration area must include a label certificate either issued by NFRC or provide a CEC Default Label Certificate using the default U-factors from Standards Table 116-A and B. Certificate shall be filed in the contractor's project office during construction and in the building manager's office after construction

#	Type		Area	U-Fac.[1]		SHGC[2]		Act. Azm.	Cond. Stat.	Glazing Type	Location/ Comments
14	Window	Front (NE)	240	0.570	NI-1	0.38	COG	42	New	PPG SOLARBAN 60 (2) Clear	VAV-7A
15	Window	Front (NE)	16	0.570	NI-1	0.38	COG	42	New	PPG SOLARBAN 60 (2) Clear	VAV-7A
16	Window	Rear (SW)	15	0.570	NI-1	0.38	COG	222	New	PPG SOLARBAN 60 (2) Clear	VAV-8A
17	Window	Rear (SW)	15	0.570	NI-1	0.38	COG	222	New	PPG SOLARBAN 60 (2) Clear	VAV-8A
18	Window	Right (NW)	45	0.570	NI-1	0.38	COG	312	New	PPG SOLARBAN 60 (2) Clear	VAV-9A
19	Window	Front (NE)	30	0.570	NI-1	0.38	COG	60	New	PPG SOLARBAN 60 (2) Clear	Kitchen/Pantry Z1B1
20	Window	Front (NE)	20	0.570	NI-1	0.38	COG	60	New	PPG SOLARBAN 60 (2) Clear	Kitchen/Pantry Z1B1
21	Window	Right (NW)	105	0.570	NI-1	0.38	COG	330	New	PPG SOLARBAN 60 (2) Clear	Banquet Z3/4B1
22	Skylight	Rear (S)	312	0.210	NFRC	0.10	NFRC	180	New	Orange Terrace PV Skylight	Corridor Z10B1
23	Window	Rear (SW)	935	0.570	NI-1	0.38	COG	240	New	PPG SOLARBAN 60 (2) Clear	Corridor Z10B1
24	Skylight	Front (N)	475	0.350	NFRC	0.34	NFRC	0	New	Orange Terrace Lobby Skylight	Lower Lobby Z11B2
25	Window	Rear (SW)	248	0.570	NI-1	0.38	COG	240	New	PPG SOLARBAN 60 (2) Clear	Lower Lobby Z11B2
26	Skylight	Front (N)	200	0.350	NFRC	0.34	NFRC	0	New	Orange Terrace Lobby Skylight	Upper Lobby Z12B2

(1) U-factor Type: 116-A Default Table from Standards, Table NI-1 Default Table from the ACM Manual Appendix, NFRC Labeled value.
(2) SHGC Type: 116-B Default Table from Standards, COG Center of Glass, NFRC Labeled Value

EXTERIOR SHADING

#	Exterior Shade Type	SHGC	Window Hgt. Wd.	Overhang Len. Hgt. LExt. RExt.	Left Fin Dist. Len. Hgt.	Right Fin Dist. Len. Hgt.
14	None	0.76				
15	None	0.76				
16	None	0.76				
17	None	0.76				
18	None	0.76				
19	None	0.76				
20	None	0.76				
21	None	0.76				
22	None	1.00				
23	Woven Sunscreen	0.30	11.0 85.0	12.0 4.0 10.0 10.0	0.1 4.0 0	0.1 4.0 0
24	None	1.00				
25	None	0.76				
26	None	1.00				

MINIMUM SKYLIGHT AREA FOR LARGE ENCLOSED SPACES

[ ] The proposed building is in climate zones 2 through 15 and contains an enclosed space with floor area greater than 25,000 ft2, a ceiling height greater than 15 feet, and an LPD for general lighting of at least 0.5 W/ft2. See Section 143(c). If this box is checked, ENV-4-C must be filled out, when submitting under the Prescriptive Compliance Approach.

EnergyPro 4.3 by EnergySoft — User Number: 4968 — Job Number: 8-06-3465 — Page:3 of 39

CERTIFICATE OF COMPLIANCE (Part 2 of 2) ENV-1-C

PROJECT NAME: Orange Terrace Library and Community Center — DATE: 3/8/2007

OPAQUE SURFACES

#	Surface Type	Area	U-Fac.	Insulation Cav.	Insulation Cont.	Act. Azm.	Tilt	Cond.* Status	Joint Appendix IV Reference	Location / Comments
1	Roof	615	0.036	R-30	R-0.0	215	21	New	02-A9	VAV-1A
2	Wall	165	0.074	R-19	R-0.0	215	90	New	09-A5	VAV-1A
3	Wall	396	0.074	R-19	R-0.0	305	90	New	09-A5	VAV-1A
4	Roof	432	0.036	R-30	R-0.0	35	25	New	02-A9	VAV-2A
5	Roof	1,502	0.036	R-30	R-0.0	215	21	New	02-A9	VAV-2A
6	Wall	565	0.074	R-19	R-0.0	215	90	New	09-A5	VAV-2A
7	Roof	545	0.036	R-30	R-0.0	222	21	New	02-A9	VAV-3A
8	Roof	400	0.036	R-30	R-0.0	35	25	New	02-A9	VAV-3A
9	Roof	1,040	0.036	R-30	R-0.0	215	21	New	02-A9	VAV-3A
10	Wall	440	0.074	R-19	R-0.0	215	90	New	09-A5	VAV-3A
11	Wall	140	0.074	R-19	R-0.0	132	90	New	09-A5	VAV-4A
12	Wall	48	0.074	R-19	R-0.0	312	90	New	09-A5	VAV-4A
13	Wall	470	0.074	R-19	R-0.0	222	90	New	09-A5	VAV-4A
14	Roof	1,005	0.036	R-30	R-0.0	222	21	New	02-A9	VAV-4A
15	Wall	289	0.074	R-19	R-0.0	35	90	New	09-A5	VAV-5A
16	Door	21	0.700	None	R-0.0	35	90	New	28-A2	VAV-5A
17	Roof	2,400	0.036	R-30	R-0.0	35	25	New	02-A9	VAV-5A
18	Wall	280	0.074	R-19	R-0.0	305	90	New	09-A5	VAV-5A
19	Wall	40	0.074	R-19	R-0.0	35	90	New	09-A5	VAV-5A
20	Roof	320	0.036	R-30	R-0.0	215	21	New	02-A9	VAV-5A

* N, E, A, R (New, Existing, Altered, Removed)

FENESTRATION SURFACES

[ ] More than or equal to 10,000 sq.ft. of site-built fenestration area must include a label certificate either issued by NFRC or provide a CEC Default Label Certificate using the default U-factors from Standards Table 116-A and B. Certificate shall be filed in the contractor's project office during construction and in the building manager's office after construction

#	Type		Area	U-Fac.[1]		SHGC[2]		Act. Azm.	Cond. Stat.	Glazing Type	Location/ Comments
1	Skylight	Rear (SW)	65	0.570	NI-1	0.38	COG	215	New	PPG SOLARBAN 60 (2) Clear	VAV-1A
2	Window	Rear (SW)	30	0.570	NI-1	0.38	COG	215	New	PPG SOLARBAN 60 (2) Clear	VAV-1A
3	Window	Right (NW)	60	0.570	NI-1	0.38	COG	305	New	PPG SOLARBAN 60 (2) Clear	VAV-1A
4	Skylight	Rear (SW)	130	0.570	NI-1	0.38	COG	215	New	PPG SOLARBAN 60 (2) Clear	VAV-2A
5	Window	Rear (SW)	60	0.570	NI-1	0.38	COG	215	New	PPG SOLARBAN 60 (2) Clear	VAV-2A
6	Skylight	Rear (SW)	130	0.570	NI-1	0.38	COG	215	New	PPG SOLARBAN 60 (2) Clear	VAV-3A
7	Window	Rear (SW)	30	0.570	NI-1	0.38	COG	215	New	PPG SOLARBAN 60 (2) Clear	VAV-3A
8	Window	Rear (SW)	85	0.570	NI-1	0.38	COG	222	New	PPG SOLARBAN 60 (2) Clear	VAV-4A
9	Skylight	Rear (SW)	195	0.570	NI-1	0.38	COG	222	New	PPG SOLARBAN 60 (2) Clear	VAV-4A
10	Window	Front (NE)	90	0.570	NI-1	0.38	COG	35	New	PPG SOLARBAN 60 (2) Clear	VAV-5A
11	Window	Right (NW)	60	0.570	NI-1	0.38	COG	305	New	PPG SOLARBAN 60 (2) Clear	VAV-5A
12	Window	Front (NE)	40	0.570	NI-1	0.38	COG	35	New	PPG SOLARBAN 60 (2) Clear	VAV-6A
13	Window	Front (NE)	108	0.570	NI-1	0.38	COG	35	New	PPG SOLARBAN 60 (2) Clear	VAV-6A

(1) U-factor Type: 116-A Default Table from Standards, Table NI-1 Default Table from the ACM Manual Appendix, NFRC Labeled value.
(2) SHGC Type: 116-B Default Table from Standards, COG Center of Glass, NFRC Labeled Value

EXTERIOR SHADING

#	Exterior Shade Type	SHGC	Window Hgt. Wd.	Overhang Len. Hgt. LExt. RExt.	Left Fin Dist. Len. Hgt.	Right Fin Dist. Len. Hgt.
1	None	1.00				
2	None	0.76				
3	None	0.76				
4	None	1.00				
5	None	0.76				
6	None	1.00				
7	None	0.76				
8	None	0.76				
9	None	1.00				
10	None	0.76				
11	None	0.76				
12	None	0.76				
13	None	0.76				

MINIMUM SKYLIGHT AREA FOR LARGE ENCLOSED SPACES

[ ] The proposed building is in climate zones 2 through 15 and contains an enclosed space with floor area greater than 25,000 ft2, a ceiling height greater than 15 feet, and an LPD for general lighting of at least 0.5 W/ft2. See Section 143(c). If this box is checked, ENV-4-C must be filled out, when submitting under the Prescriptive Compliance Approach.

EnergyPro 4.3 by EnergySoft — User Number: 4968 — Job Number: 8-06-3465 — Page:2 of 39

CERTIFICATE OF COMPLIANCE (Part 1 of 2) MECH-1-C

PROJECT NAME: Orange Terrace Library and Community Center — DATE: 3/8/2007
PROJECT ADDRESS: 20010 Orange Terrace Parkway Riverside — Building Permit #
PRINCIPAL DESIGNER - MECHANICAL: Don Blackwell - PRM — TELEPHONE: Same
DOCUMENTATION AUTHOR: Pacific Rim Mechanical — TELEPHONE: (858) 974-6500 — Checked by/Date, Enforcement Agency Use

GENERAL INFORMATION

DATE OF PLANS: 3-12-07 — BUILDING CONDITIONED FLOOR AREA: 36,753 Sq.Ft. — CLIMATE ZONE: 10

BUILDING TYPE: [X] NONRESIDENTIAL [ ] HIGH RISE RESIDENTIAL [ ] HOTEL/MOTEL GUEST ROOM

PHASE OF CONSTRUCTION: [X] NEW CONSTRUCTION [ ] ADDITION [ ] ALTERATION [ ] UNCONDITIONED (File Affidavit)

METHOD OF MECHANICAL COMPLIANCE: [X] PRESCRIPTIVE [ ] PERFORMANCE

PROOF OF ENVELOPE COMPLIANCE: [ ] PREVIOUS ENVELOPE PERMIT [X] ENVELOPE COMPLIANCE ATTACHED

STATEMENT OF COMPLIANCE

This Certificate of Compliance lists the building features and performance specifications needed to comply with Title 24, Parts 1 and 6 of the California Code of Regulations. This certificate applies only to building mechanical requirements.

The documentation preparer hereby certifies that the documentation is accurate and complete.

DOCUMENTATION AUTHOR: Don Blackwell - PRM — SIGNATURE: [signature] — DATE: 3/8/07

The Principal Mechanical Designer hereby certifies that the proposed building design represented in this set of construction documents is consistent with the other compliance forms and worksheets, with the specifications, and with any other calculations submitted with this permit application. The proposed building has been designed to meet the mechanical requirements contained in the applicable parts of Sections 100, 101, 102, 110 through115, 120 through 125, 142, 144, and 145.

- [✓] The plans & specifications meet the requirements of Part 1 (Sections 10-103a).
- [✓] The installation certificates meet the requirements of Part 1 (10-103a 3).
- [✓] The operation & maintenance information meets the requirements of Part 1 (10-103c).

Please check one: (These sectionsof the Business and Professions Code are printed in full in the Nonresidential Manual.)

[X] I hereby affirm that I am eligible under the provisions of Division 3 of the Business and Professions Code to sign this document as the person responsible for its preparation; and that I am licensed in the State of California as a civil engineer, or mechanical engineer or I am a licensed architect.

[ ] I affirm that I am eligible under the exemption to Division 3 of the Business and Professions Code by Section 5537.2 or 6737.3 to sign this document as the person responsible for its preparation; and that I am a licensed contractor performing this work.

[ ] I affirm that I am eligible under the exemption to Division 3 of the Business and Professions Code to sign this document because it pertains to a structure or type of work described pursuant to Business and Professions Code sections 5537, 5538, and 6737.1.

PRINCIPAL MECHANICAL DESIGNER - NAME: Don Blackwell - PRM — SIGNATURE: [signature] — DATE: 3/8/07 — LIC. #: M31522

INSTRUCTIONS TO APPLICANT

- [X] MECH-1-C: Certificate of Compliance. Part 1, 2, 3 of 3 are required on plans for all submittals.
- [X] MECH-2-C: Air/Water/Service/Water Pools Requirements. Part 1 of 3, 2 of 3, 3 of 3 are required for all submittals, but may be on plans.
- [X] MECH-3-C: Mechanical Ventilation and Reheat is required for all submittals with mechanical ventilation, but may be on plans.
- [ ] MECH-4-C: HVAC Misc. Prescriptive Requirements is required for all prescriptive submittals, but may be on plans.
- [ ] MECH-5-C: Mechanical Equipment Details are required for all performance submittals.

EnergyPro 4.3 by EnergySoft — User Number: 4968 — Job Number: 8-06-3465 — Page:40 of 45

CERTIFICATE OF COMPLIANCE (Part 2 of 2) MECH-1-C

PROJECT NAME: Orange Terrace Library and Community Center — DATE: 3/8/2007

Designer:

This form is to be used by the designer and attached to the plans. Listed below are all the acceptance tests for mechanical systems. The designer is required to check the boxes by all acceptance tests that apply and list all equipment that requires an acceptance test. If all equipment of a certain type requires a test, list the equipment description and the number of systems to be tested in parentheses. The NJ number designates the Section in the Appendix of the Nonresidential ACM Manual that describes the test. Also indicate the person responsible for performing the tests (i.e. the installing contractor, design professional or an agent selected by the owner). Since this form will be part of the plans, completion of this section will allow the responsible party to budget for the scope of work appropriately.

Building Departments:

SYSTEM ACCEPTANCE. Before an occupancy permit is granted for a newly constructed building or space, or a new space-conditioning system serving a building or space is operated for normal use, all control devices serving the building or space shall be certified as meeting the Acceptance Requirements for Code Compliance.

In addition a Certificate of Acceptance, MECH-1-A Form shall be submitted to the building department that certifies plans, specifications, installation certificates, and operating and maintenance information meet the requirements of Section 10-103(b) and Title 24 Part 6.

STATEMENT OF COMPLIANCE

[X] MECH-2-A: Ventilation System Acceptance Document
-Variable Air Volume Systems Outdoor Air Acceptance
-Constant Air Volume Systems Outdoor Air Acceptance
Equipment requiring acceptance testing: AH-A, AH-B1, AH-B2
Test required on all New systems both New Construction and Retrofit.

[X] MECH-3-A: Packaged HVAC Systems Acceptance Document
Equipment requiring acceptance testing: FC-A1, FC-B1, FC-B2
Test required on all New systems both New Construction and Retrofit.

[X] MECH-4-A: Air-Side Economizer Acceptance Document
Equipment requiring acceptance testing: AH-A, AH-B1, AH-B2
Test required on all New systems both New Construction and Retrofit. Units with economizers that are installed at the factory and certified with the commission do not require equipment testing but do require construction inspection.

[ ] MECH-5-A: Air Distribution Acceptance Document
Equipment requiring acceptance testing: N/R
This test required if the unit serves 5,000 ft2 of space or less and 25% or more of the ducts are in nonconditioned or semiconditioned space like an attic. New systems that meet the above requirements. Retrofit systems that meet the above requirements and either extend ducts, replace ducts or replace the packaged unit.

[X] MECH-6-A: Demand Control Ventilation Acceptance Document
Equipment requiring acceptance testing: AH-A, AH-B1, AH-B2
All new DCV controls installed on new or existing packaged systems must be tested.

[X] MECH-7-A: Supply Fan Variable Flow Control Acceptance Document
Equipment requiring acceptance testing: AH-A, AH-B1, AH-B2
All new VAV fan volume controls installed on new or existing systems must be tested.

[X] MECH-8-A: -Hydronic System Control Acceptance Document
-Variable Flow Controls *Applies to chilled and hot water systems.*
-Automatic Isolation Controls *Applies to new boilers and chillers and the primary pumps are connected to a common header.*
-Supply Water Temperature Reset Controls *Applies to new constant flow chilled and hot water systems that have a design capacity greater than or equal to 500,000 Btu/hr.*
-Water-loop Heat Pump Controls *Applies to all new waterloop heat pump systems where the combined loop pumps are greater than 5 hp.*
-Variable Frequency Controls *Applies to all new distribution pumps on new variable flow chilled, hydronic heat pump or condenser water systems where the pumps motors are greater than 5 hp.*
Equipment requiring acceptance testing: B-1

EnergyPro 4.3 by EnergySoft — User Number: 4968 — Job Number: 8-06-3465 — Page:41 of 45

HMC ARCHITECTS
Architecture Interiors Planning
3270 INLAND EMPIRE BLVD.
ONTARIO, CALIFORNIA 91764
Telephone: 909 . 989 . 9979
Fax: 909 . 483 . 1400
www. hmcarchitects .com

Pacific Rim Mechanical
ENGINEERS & CONTRACTORS
7655 Convoy Court
San Diego, California 92111
(858) 974-6500 FAX: (858) 974-6501
www.prmech.com CA Lic. 814462

AS BUILT

Key Plan

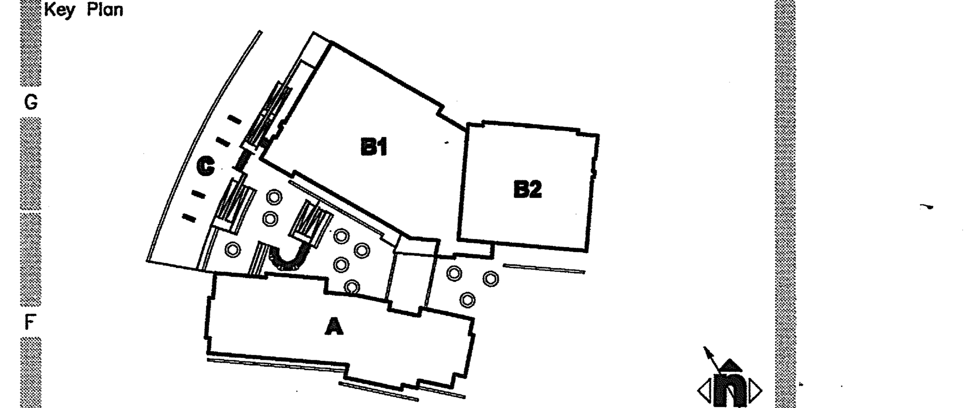

Consultant's Seal: REGISTERED PROFESSIONAL ENGINEER — JOSEPH MUCHER — No. M 30343 — EXP: 6/09 — MECHANICAL — STATE OF CALIFORNIA

Agency Approval

Project Title

ORANGE TERRACE LIBRARY / COMMUNITY CENTER
PLAN CHECK NO. 07-1397
CITY OF RIVERSIDE DEVELOPMENT DEPARTMENT
3900 MAIN STREET, 5TH FLOOR
RIVERSIDE, CA 92522

CITY OF RIVERSIDE

HMC ARCHITECTS

No.	Revisions/Submissions	Date:
	Design Development Submittal	12/18/06
	Building Department Submittal	03/12/07
	Building Department Resubmittal	05/17/07
	Building Department Resubmittal / QA QC Review	06/22/07

Drawing Title

MECHANICAL - TITLE 24

Architect's Seal: LICENSED ARCHITECT — CHRISTOPHER RICHARD TAYLOR — NO. C-19759 — REN. 02-24-07 — STATE OF CALIFORNIA

Designed:	Project No. 2340001
Drawn:	Scale: AS NOTED
Checked:	Drawing No.
Reviewed:	**M1.3**
Date: 03-12-07	Sheet of #

File Name: H:\Orange Terrace Lib and Comm Center\8-06-3465\Design\City Resubmittal 062207\3465 – M1.3.dwg Jun 20,2007-1:29pm

PLEASE RECYCLE 3465 – M1.3.DWG

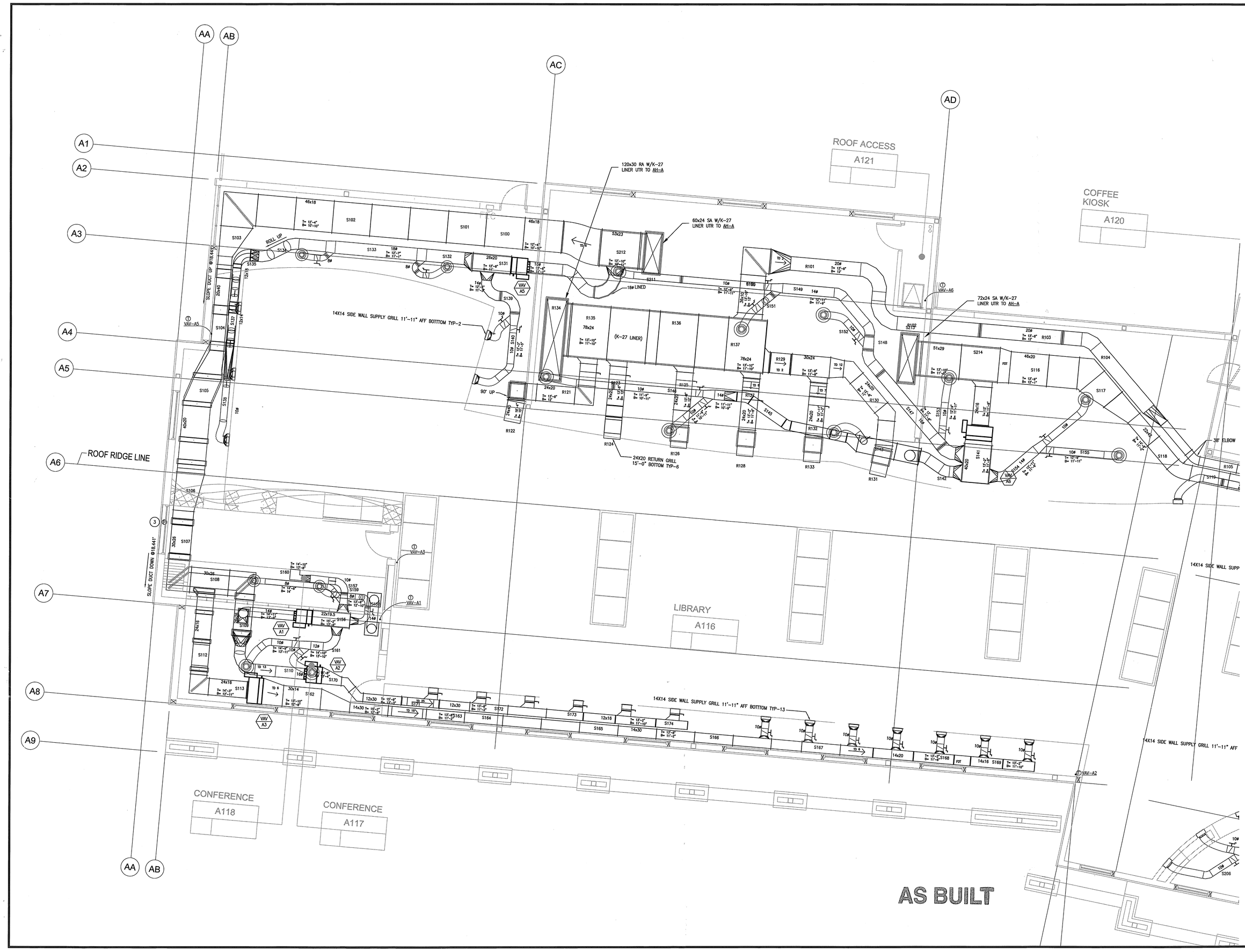

Pacific Rim Mechanical

ENGINEERS + CONTRACTORS
7655 Convoy Court
San Diego, California 92111
(858) 974-6500 FAX: (858) 974-6501
www.prmech.com CA Lic. 814462

HMC ARCHITECTS
3070 BIRCH STREET
NEWPORT BEACH, CALIFORNIA 92660
Telephone: 949 489 9979
Facsimile: 949 489 9980
www.hmcarchitects.com
Architecture Interior Planning

ORANGE TERRACE LIBRARY / COMMUNITY CENTER

CITY OF RIVERSIDE DEVELOPMENT DEPARTMENT
3900 MAIN STREET, 5TH FLOOR
RIVERSIDE, CA 92522

RECEIVED
DEC 10 2008
DIFFENBAUGH

A S B U I L T D W G
THIS DWG. REPRESENTS AN INSTALLED MECHANICAL SYSTEM AS WE KNOW IT.

PRM PROJECT MANAGER	DATE
PRM JOBSITE SUPERVISOR	DATE

TITLE:
MECHANICAL – BLDG 'A' AREA (A) FLOOR PLAN

H:\Orange Terrace Lib and Comm Center\2-07-3400-M-BLD'A'MA01.dwg Jul 03, 2008 - 2:03pm fbaca

REVISIONS:
10-5-07 SHOP DRAWING SUBMITTAL

DATE: 07-02-08
DRAWN BY: DETAILING DEPT.
CHECKED BY:
PROJECT NO:

SHEET NO:
MA2.1A

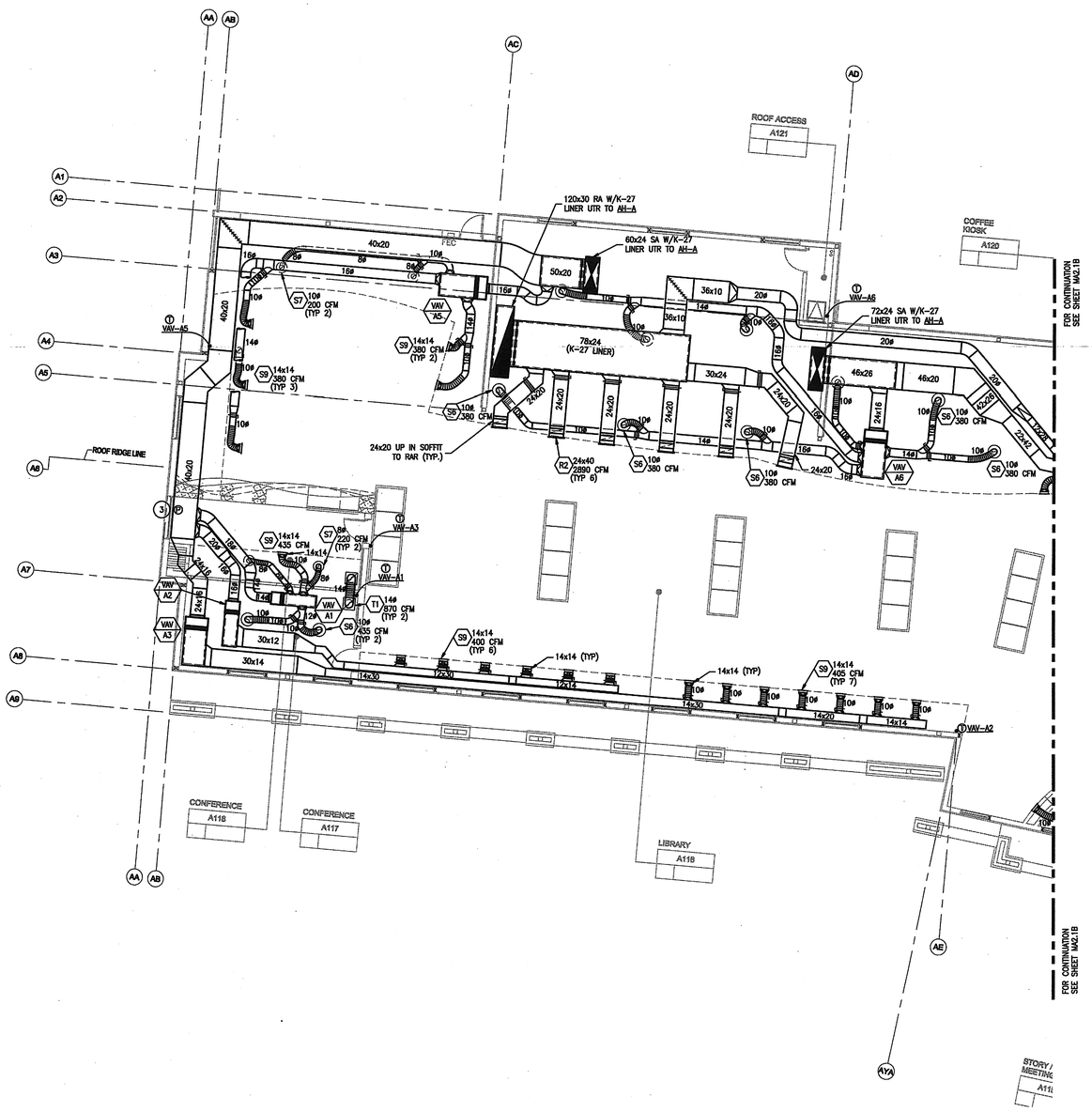

MECHANICAL – BUILDING 'A' AREA (A) FLOOR PLAN

1/8"=1'-0"

NORTH

HMC ARCHITECTS
Architecture Interiors Planning
3270 INLAND EMPIRE BLVD.
ONTARIO, CALIFORNIA 91764
Telephone: 909.989.9979
Fax: 909.483.1400
www.hmcarchitects.com

Pacific Rim Mechanical
ENGINEERS & CONTRACTORS
7655 Convoy Court
San Diego, California 92111
(858) 974-6500 FAX: (858) 974-6501
www.prmech.com CA Lic. 814462

AS BUILT

Key Plan

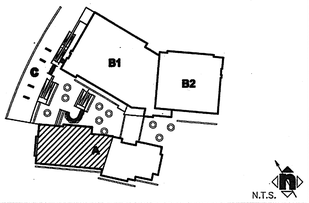

Consultant's Seal

REGISTERED PROFESSIONAL ENGINEER JOSEPH MOORE III No. M 30343 Exp. 6/08 MECHANICAL STATE OF CALIFORNIA

Agency Approval

Project Title

CITY OF RIVERSIDE

ORANGE TERRACE LIBRARY / COMMUNITY CENTER

PLAN CHECK NO. 07-1397

CITY OF RIVERSIDE DEVELOPMENT DEPARTMENT
3900 MAIN STREET, 5TH FLOOR
RIVERSIDE, CA 92522

HMC ARCHITECTS

No.	Revisions/Submissions	Date:
	Design Development Submittal	12/18/06
	~~Building Department Submittal~~	~~03/12/07~~
	Building Department Resubmittal	05/17/07
	Building Department Resubmittal / QA QC Review	06/22/07

Drawing Title **MECHANICAL - BLDG 'A' AREA (A) FLOOR PLAN**

Architect's Seal

LICENSED ARCHITECT CHRISTOPHER RICHARD TAYLOR REN. NO. C-19759 REN. 02-24-07 STATE OF CALIFORNIA

Designed:	Project No. 2340001
Drawn:	Scale: AS NOTED
Checked:	Drawing No.
Reviewed:	MA2.1A
Date: 03-12-07	Sheet of #

File Name: H:\Orange Terrace Lib and Comm Center\8-06-3465\Design\City Resubmittal 062207\3465 – MA2.1A.dwg Jun 20,2007-1:31pm

PLEASE RECYCLE 3465 – MA2.1A.DWG

AS BUILT

SHEET NO: MA2.1B	TITLE: MECHANICAL – BLDG 'A' AREA (B) FLOOR PLAN H:\Orange Terrace Lib and Comm Center\2-07-3465\AS-BUILT\MA21.dwg Jul 02, 2008 – 2:21pm DSpoo DATE: 07-02-08 DRAWN BY: DETAILING DEPT. CHECKED BY: - PROJECT NO: -	REVISIONS: 10-5-07 SHOP DRAWING SUBMITTAL	AS BUILT DWG. THIS DWG. REPRESENTS AN INSTALLED MECHANICAL SYSTEM AS WE KNOW IT. PRM PROJECT MANAGER DATE PRM JOBSITE SUPERVISOR DATE

ORANGE TERRACE LIBRARY / COMMUNITY CENTER
CITY OF RIVERSIDE DEVELOPMENT DEPARTMENT
3900 MAIN STREET, 5TH FLOOR
RIVERSIDE, CA 92522

HMC ARCHITECTS
Architecture Interiors Planning
3270 INLAND EMPIRE BLVD.
ONTARIO, CALIFORNIA 91764
Telephone: 909.989.9979
Fax: 909.483.1400
www.hmcarchitects.com

Pacific Rim Mechanical
ENGINEERS + CONTRACTORS
7655 Convoy Court
San Diego, California 92111
(858) 974-6500 FAX: (858) 974-6501
www.prmech.com CA Lic. 814462

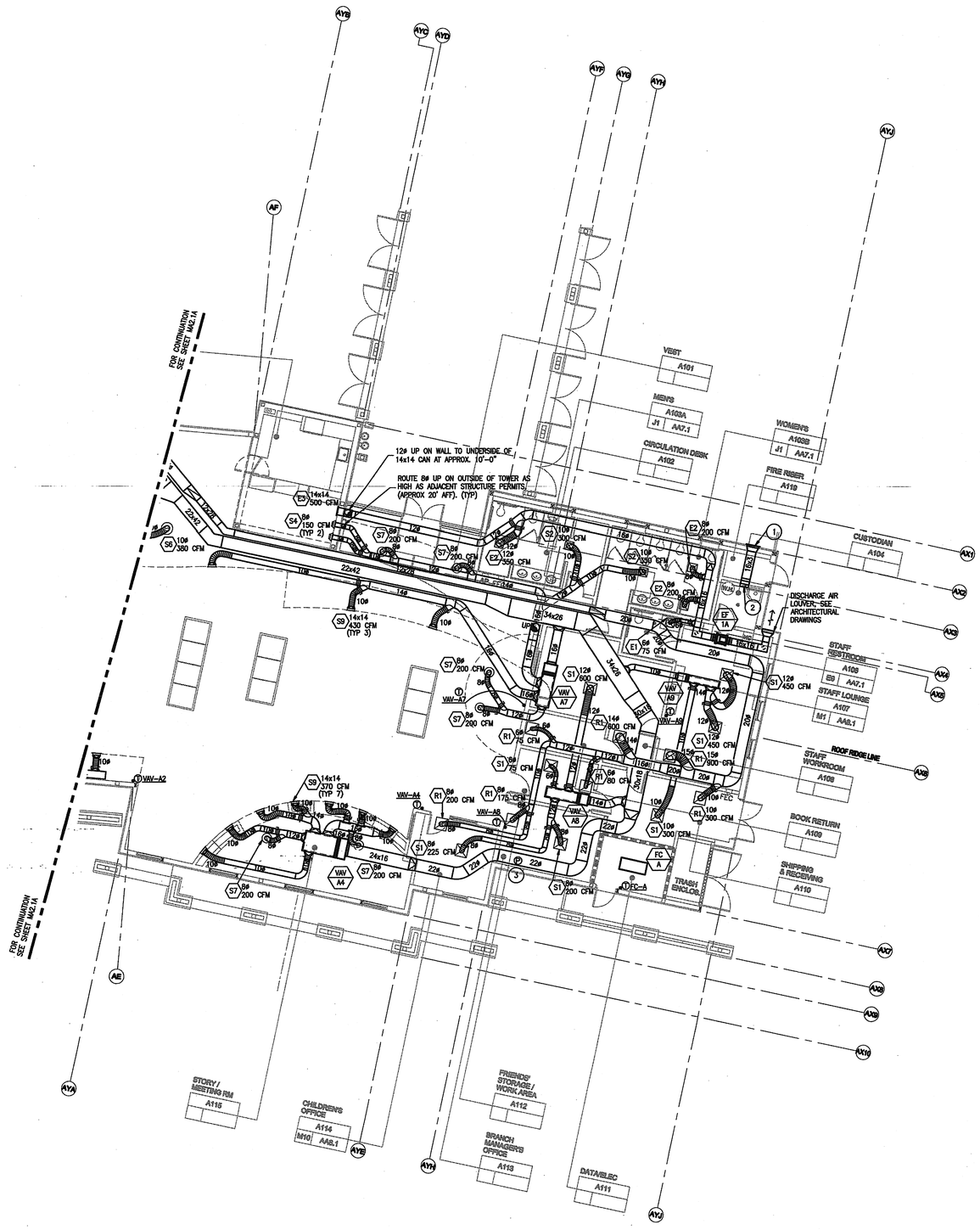

SHEET NOTES:

1. COMBUSTION AIR INTAKE LOUVER, SEE ARCHITECTURAL DRAWINGS.
2. (2)16x3 COMBUSTION AIR DUCT, SEE SHEET M4.3 DETAIL 7 FOR FURTHER INFORMATION.
3. LOCATION OF DUCT STATIC PRESSURE SENSOR.

MECHANICAL – BUILDING 'A' AREA (B) FLOOR PLAN

1/8"=1'-0"

NORTH

HMC ARCHITECTS
Architecture Interiors Planning
3270 INLAND EMPIRE BLVD.
ONTARIO, CALIFORNIA 91764
Telephone: 909 . 989 . 9979
Fax: 909 . 483 . 1400
www. hmcarchitects .com

Pacific Rim Mechanical
ENGINEERS & CONTRACTORS
7655 Convoy Court
San Diego, California 92111
(858) 974-6500 FAX: (858) 974-6501
www.prmech.com CA Lic. 814462

AS BUILT

Key Plan

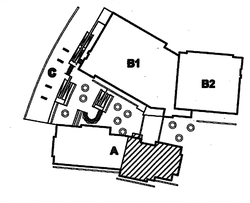

N.T.S.

Consultant's Seal

REGISTERED PROFESSIONAL ENGINEER JOSEPH MUSTER No. M-50343 Exp. 6/09 MECHANICAL STATE OF CALIFORNIA

Agency Approval

Project Title

CITY OF RIVERSIDE

ORANGE TERRACE LIBRARY / COMMUNITY CENTER

PLAN CHECK NO. 07-1397

CITY OF RIVERSIDE DEVELOPMENT DEPARTMENT
3900 MAIN STREET, 5TH FLOOR
RIVERSIDE, CA 92522

HMC ARCHITECTS

No.	Revisions/Submissions	Date:
	Design Development Submittal	12/18/06
	~~Building Department Submittal~~	~~03/12/07~~
	Building Department Resubmittal	05/17/07
	Building Department Resubmittal / QA QC Review	06/22/07

Drawing Title **MECHANICAL - BLDG 'A' AREA (B) FLOOR PLAN**

Architect's Seal

LICENSED ARCHITECT CHRISTOPHER RICHARD TAYLOR REG. NO. C-19759 REN. 02-24-07 STATE OF CALIFORNIA

Designed:	Project No. 2340001
Drawn:	Scale: AS NOTED
Checked:	Drawing No.
Reviewed:	MA2.1B
Date: 03-12-07	Sheet of #

SHEET NOTES:

SEE SHEET MA2.1A FOR LOCATIONS OF THERMOSTATS.

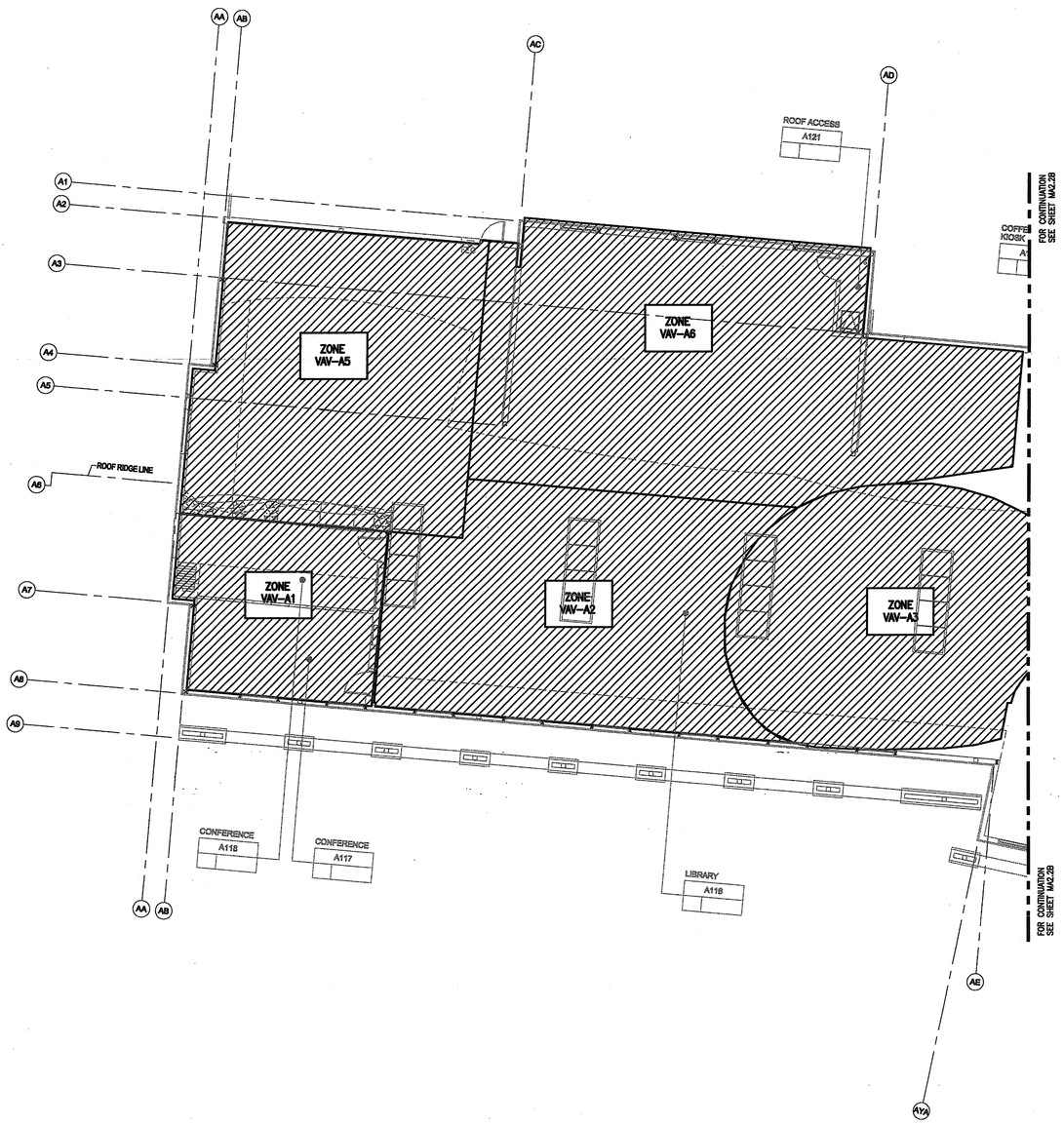

MECHANICAL – BUILDING 'A' AREA (A) ZONE PLAN

1/8"=1'-0"

NORTH

HMC ARCHITECTS
Architecture Interiors Planning
3270 INLAND EMPIRE BLVD.
ONTARIO, CALIFORNIA 91764
Telephone: 909 . 989 . 9979
Fax: 909 . 483 . 1400
www. hmcarchitects .com

Pacific Rim Mechanical
ENGINEERS & CONTRACTORS
7655 Convoy Court
San Diego, California 92111
(858) 974-6500 FAX: (858) 974-6501
www.prmech.com CA Lic. 814462

AS BUILT

Key Plan

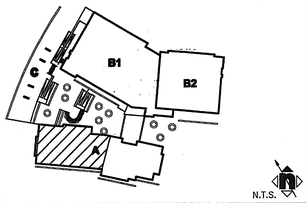

Consultant's Seal

REGISTERED PROFESSIONAL ENGINEER
JOSEPH MOORE
No. E 20348
Exp. 6/09
MECHANICAL
STATE OF CALIFORNIA

Agency Approval

Project Title

CITY OF RIVERSIDE

ORANGE TERRACE LIBRARY / COMMUNITY CENTER

PLAN CHECK NO. 07-1397

CITY OF RIVERSIDE DEVELOPMENT DEPARTMENT
3900 MAIN STREET, 5TH FLOOR
RIVERSIDE, CA 92522

HMC ARCHITECTS

No.	Revisions/Submissions	Date:
	Design Development Submittal	12/18/06
	Building Department Submittal	03/12/07
	Building Department Resubmittal	05/17/07
	Building Department Resubmittal / QA QC Review	06/22/07

Drawing Title

MECHANICAL - BLDG 'A' AREA (A) ZONE PLAN

Architect's Seal

LICENSED ARCHITECT
CHRISTOPHER RICHARD TAYLOR
NO. C-19759
REN. 02-24-07
STATE OF CALIFORNIA

Designed:	Project No. 2340001
Drawn:	Scale: AS NOTED
Checked:	Drawing No.
Reviewed:	MA2.2A
Date: 03-12-07	Sheet of #

File Name: H:\Orange Terrace Lib and Comm Center\8-06-3465\Design\City Resubmittal 062207\3465 – MA2.2A.dwg Jun 20,2007-1:32pm

PLEASE RECYCLE 3465 – MA2.2A.DWG

MECHANICAL – BUILDING 'A' AREA BA) ZONE PLAN

1/8"=1'-0"

NORTH

SHEET NOTES:

SEE SHEET MA2.1B FOR LOCATIONS OF THERMOSTATS.

HMC ARCHITECTS
Architecture Interiors Planning
3270 INLAND EMPIRE BLVD.
ONTARIO, CALIFORNIA 91764
Telephone: 909 . 989 . 9979
Fax: 909 . 483 . 1400
www. hmcarchitects .com

Pacific Rim Mechanical
ENGINEERS & CONTRACTORS
7655 Convoy Court
San Diego, California 92111
(858) 974-6500 FAX: (858) 974-6501
www.prmech.com CA Lic. 814462

AS BUILT

Key Plan

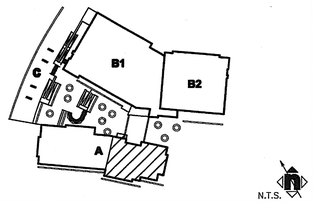

Consultant's Seal

REGISTERED PROFESSIONAL ENGINEER
JOSEPH MUSTAFA
No. M 003463
Exp. 3/09
MECHANICAL
STATE OF CALIFORNIA

Agency Approval

Project Title

CITY OF RIVERSIDE

ORANGE TERRACE LIBRARY / COMMUNITY CENTER

PLAN CHECK NO. 07-1397

CITY OF RIVERSIDE DEVELOPMENT DEPARTMENT
3900 MAIN STREET, 5TH FLOOR
RIVERSIDE, CA 92522

HMC ARCHITECTS

No.	Revisions/Submissions	Date:
	Design Development Submittal	12/18/06
	~~Building Department Submittal~~	~~03/12/07~~
	Building Department Resubmittal	05/17/07
	Building Department Resubmittal / QA QC Review	06/22/07

Drawing Title

MECHANICAL - BLDG 'A' AREA (B) ZONE PLAN

Architect's Seal

LICENSED ARCHITECT
CHRISTOPHER RICHARD TAYLOR
REG. NO. C-19759
REN. 02-24-07
STATE OF CALIFORNIA

Designed:	Project No. 2340001
Drawn:	Scale: AS NOTED
Checked:	Drawing No.
Reviewed:	MA2.2B
Date: 03-12-07	Sheet of ##

File Name: H:\Orange Terrace Lib and Comm Center\8-06-3465\Design\City Resubmittal 062207\3465 – MA2.2B.dwg Jun 20,2007-1:32pm

PLEASE RECYCLE 3465 – MA2.2B.DWG

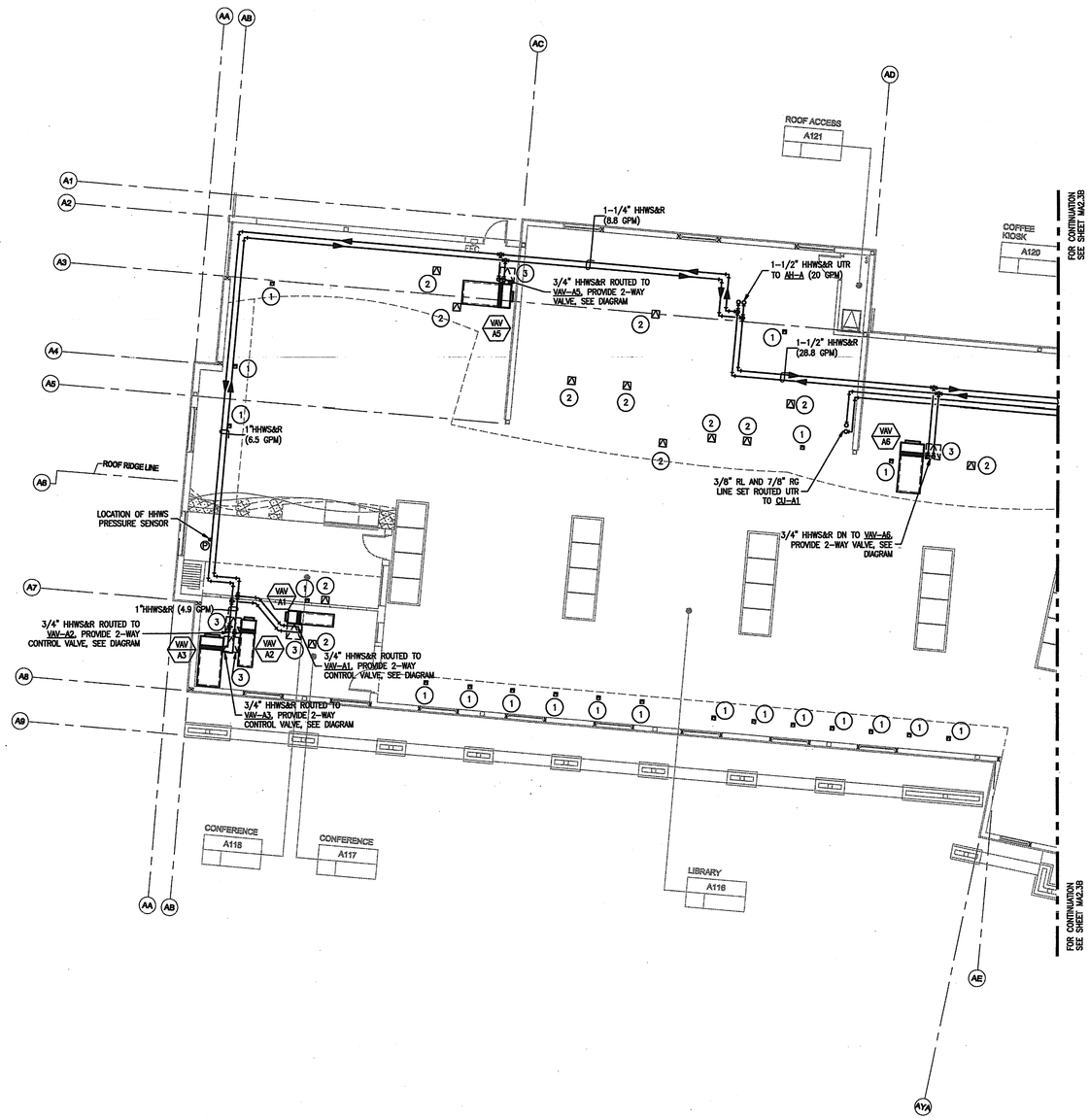

MECHANICAL – BUILDING 'A' AREA (A) FLOOR PLAN

1/8"=1'-0"

NORTH

GENERAL NOTES:

MECHANICAL CONTRACTOR SHALL LAY-OUT AND COORDINATE SIZE LOCATIONS OF ALL ACCESS PANELS. NOT ALL ACCESS PANELS THAT MAY BE REQUIRED ARE SHOWN.

SHEET NOTES:

1. PROVIDE 6x6 CEILING ACCES PANEL AT THIS LOCATION.
2. PROVIDE 12x12 CEILING ACCES PANEL AT THIS LOCATION.
3. PROVIDE 24x24 CEILING ACCES PANEL AT THIS LOCATION.

HMC ARCHITECTS
Architecture Interiors Planning
3270 INLAND EMPIRE BLVD.
ONTARIO, CALIFORNIA 91764
Telephone: 909.989.9979
Fax: 909.483.1400
www.hmcarchitects.com

Pacific Rim Mechanical
ENGINEERS & CONTRACTORS
7655 Convoy Court
San Diego, California 92111
(858) 974-6500 FAX: (858) 974-6501
www.prmech.com CA Lic. 814462

AS BUILT

Key Plan

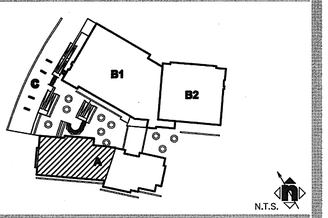

Consultant's Seal

REGISTERED PROFESSIONAL ENGINEER JOSEPH MUCKE No. M 20745 Exp. 6/08 MECHANICAL STATE OF CALIFORNIA

Agency Approval

Project Title

CITY OF RIVERSIDE

ORANGE TERRACE LIBRARY / COMMUNITY CENTER

PLAN CHECK NO. 07-1397

CITY OF RIVERSIDE DEVELOPMENT DEPARTMENT
3900 MAIN STREET, 5TH FLOOR
RIVERSIDE, CA 92522

HMC ARCHITECTS

No.	Revisions/Submissions	Date:
	Design Development Submittal	12/18/06
	Building Department Submittal	03/12/07
	Building Department Resubmittal	05/17/07
	Building Department Resubmittal / QA QC Review	06/22/07

Drawing Title **MECHANICAL - BLDG 'A' AREA (A) PIPING PLAN**

Architect's Seal

LICENSED ARCHITECT CHRISTOPHER RICHARD TAYLOR NO. C-19759 EXP. 02-24-07 STATE OF CALIFORNIA

Designed:	Project No. 2340001
Drawn:	Scale: AS NOTED
Checked:	Drawing No.
Reviewed:	MA2.3A
Date: 03-12-07	Sheet of ##

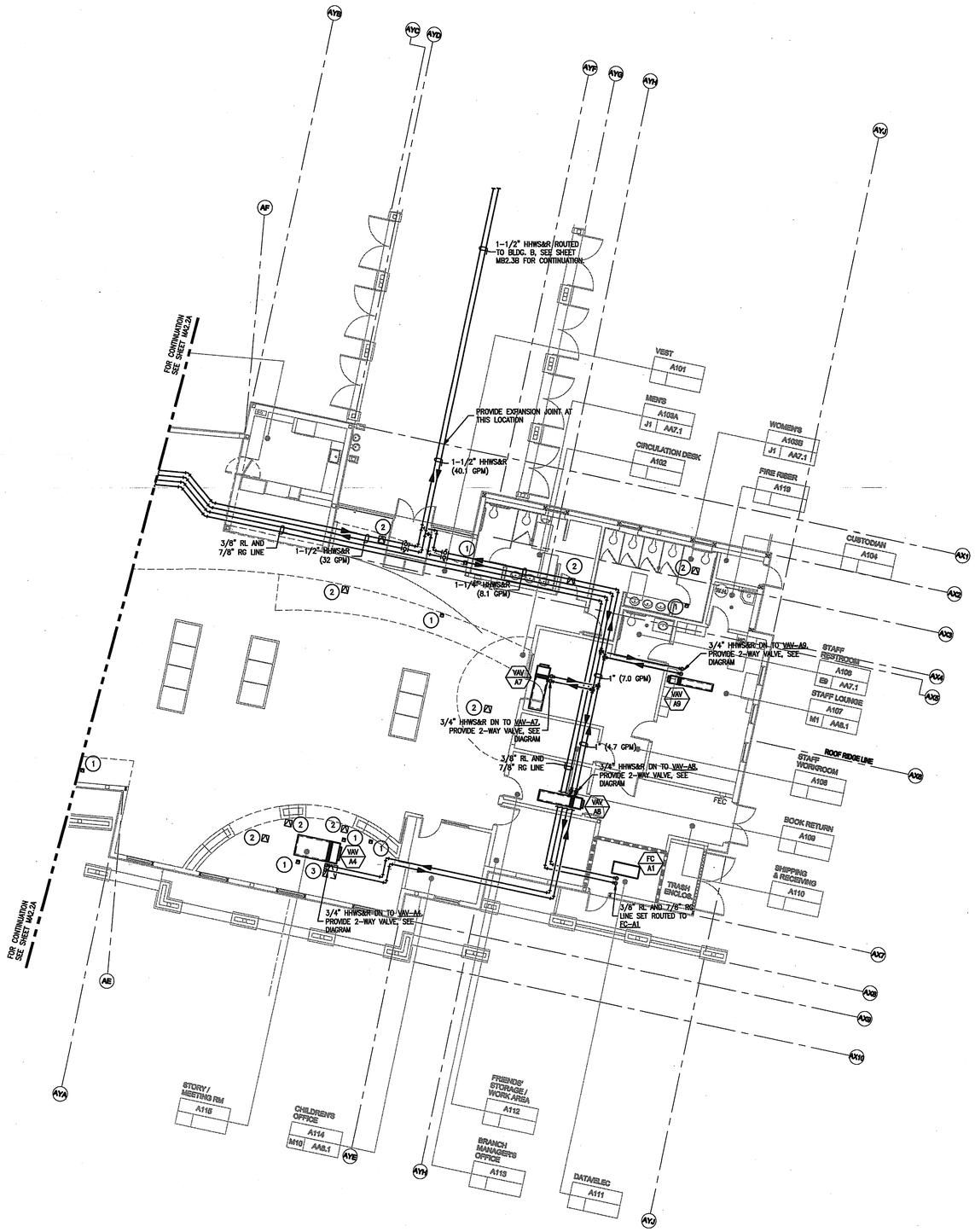

MECHANICAL – BUILDING 'A' AREA (B) FLOOR PLAN

1/8"=1'-0"

NORTH

GENERAL NOTES:

MECHANICAL CONTRACTOR SHALL LAY-OUT AND COORDINATE SIZE LOCATIONS OF ALL ACCESS PANELS. NOT ALL ACCESS PANELS THAT MAY BE REQUIRED ARE SHOWN.

SHEET NOTES:

1. PROVIDE 6x6 CEILING ACCES PANEL AT THIS LOCATION.
2. PROVIDE 12x12 CEILING ACCES PANEL AT THIS LOCATION.
3. PROVIDE 24x24 CEILING ACCES PANEL AT THIS LOCATION.

HMC ARCHITECTS
Architecture Interiors Planning
3270 INLAND EMPIRE BLVD.
ONTARIO, CALIFORNIA 91764
Telephone: 909 . 989 . 9979
Fax: 909 . 483 . 1400
www. hmcarchitects .com

Pacific Rim Mechanical
ENGINEERS & CONTRACTORS
7655 Convoy Court
San Diego, California 92111
(858) 974-6500 FAX: (858) 974-6501
www.prmech.com CA Lic. 814462

AS BUILT

Key Plan

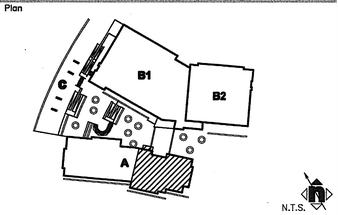

Consultant's Seal

REGISTERED PROFESSIONAL ENGINEER JOSEPH MUCHER EXP. 6/30 MECHANICAL STATE OF CALIFORNIA

Agency Approval

Project Title

CITY OF RIVERSIDE

ORANGE TERRACE LIBRARY / COMMUNITY CENTER

PLAN CHECK NO. 07-1397

CITY OF RIVERSIDE DEVELOPMENT DEPARTMENT
3900 MAIN STREET, 5TH FLOOR
RIVERSIDE, CA 92522

HMC ARCHITECTS

No.	Revisions/Submissions	Date:
	Design Development Submittal	12/18/06
	Building Department Submittal	03/12/07
	Building Department Resubmittal	05/17/07
	Building Department Resubmittal / CA QC Review	06/22/07

Drawing Title **MECHANICAL - BLDG 'A' AREA (B) PIPING PLAN**

Architect's Seal

LICENSED ARCHITECT CHRISTOPHER RICHARD TAYLOR NO. C-19759 EXP. 02-24-07 STATE OF CALIFORNIA

Designed:	Project No. 2340001
Drawn:	Scale: AS NOTED
Checked:	Drawing No.
Reviewed:	MA2.3B
Date: 03-12-07	Sheet of #

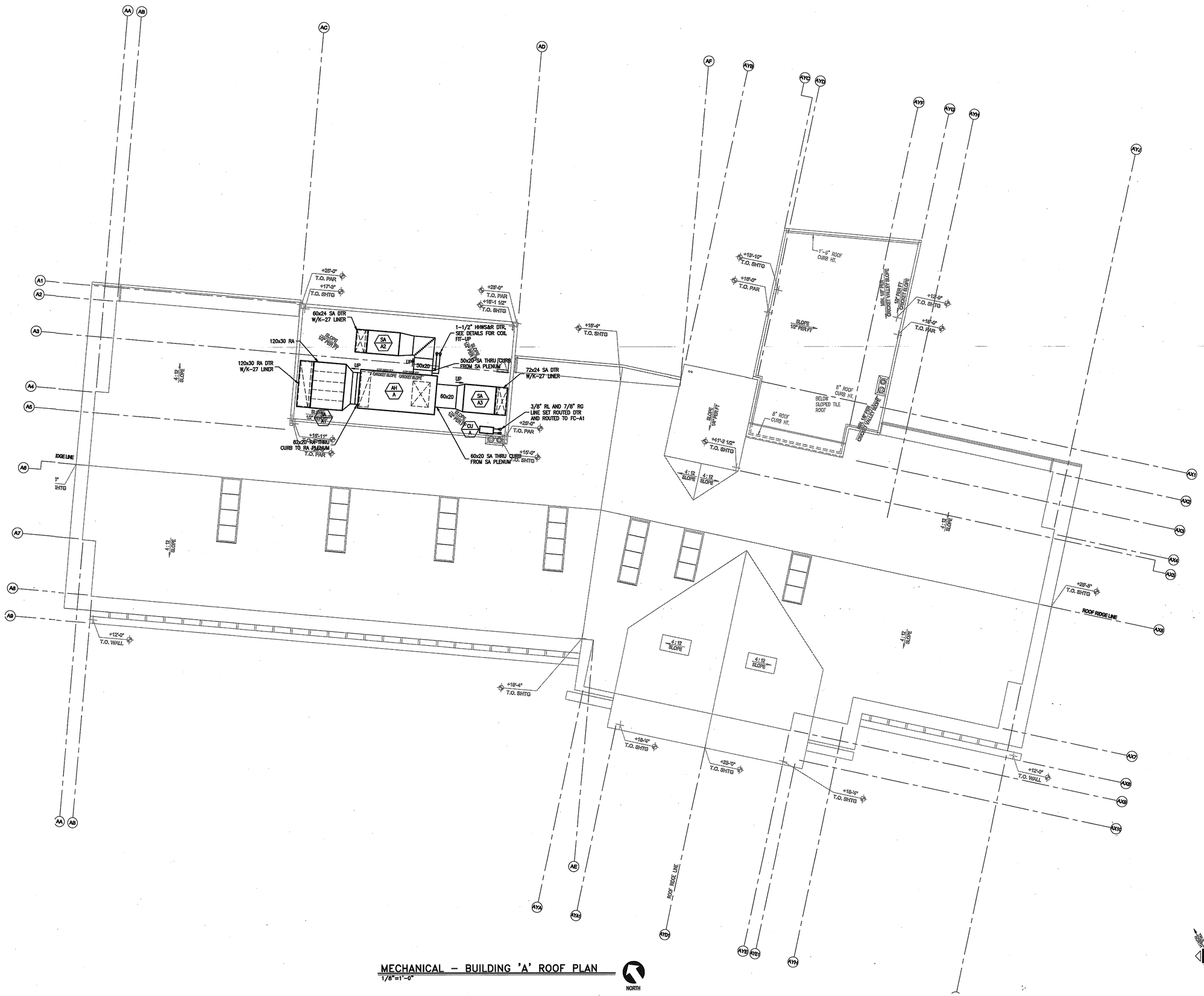

MECHANICAL – BUILDING 'A' ROOF PLAN
1/8"=1'-0"

HMC ARCHITECTS
Architecture Interiors Planning
3270 INLAND EMPIRE BLVD.
ONTARIO, CALIFORNIA 91764
Telephone: 909 . 989 . 9979
Fax: 909 . 483 . 1400
www. hmcarchitects .com

Pacific Rim Mechanical
ENGINEERS & CONTRACTORS
7655 Convoy Court
San Diego, California 92111
(858) 974-6500 FAX: (858) 974-6501
www.prmech.com CA Lic. 814462

AS BUILT

Key Plan

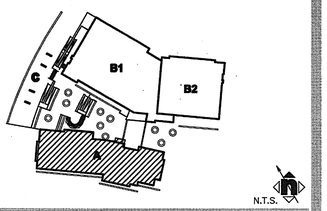

Consultant's Seal

REGISTERED PROFESSIONAL ENGINEER
JOSEPH MICHAEL
No. 20348
EXP. 1/31/08
MECHANICAL
STATE OF CALIFORNIA

Agency Approval

Project Title

CITY OF RIVERSIDE

ORANGE TERRACE LIBRARY / COMMUNITY CENTER
PLAN CHECK NO. 07-1397
CITY OF RIVERSIDE DEVELOPMENT DEPARTMENT
3900 MAIN STREET, 5TH FLOOR
RIVERSIDE, CA 92522

HMC ARCHITECTS

No.	Revisions/Submissions	Date:
	Design Development Submittal	12/18/06
	Building Department Submittal	09/12/07
	Building Department Resubmittal	05/17/07
	Building Department Resubmittal / CA QC Review	06/22/07

Drawing Title
MECHANICAL - BLDG 'A' ROOF PLAN

Architect's Seal

LICENSED ARCHITECT
CHRISTOPHER RICHARD TAYLOR
NO. C-19759
REN. 02-24-07
STATE OF CALIFORNIA

Designed:	Project No. 2340001
Drawn:	Scale: AS NOTED
Checked:	Drawing No.
Reviewed:	MA3.1
Date: 03-12-07	Sheet of #

File Name: H:\Orange Terrace Lib and Comm Center\8-06-3465\Design\City Resubmittal 062207\3465 – MA3.1.dwg Jun 20,2007-1:33pm

PLEASE RECYCLE 3465 – MA3.1.DWG

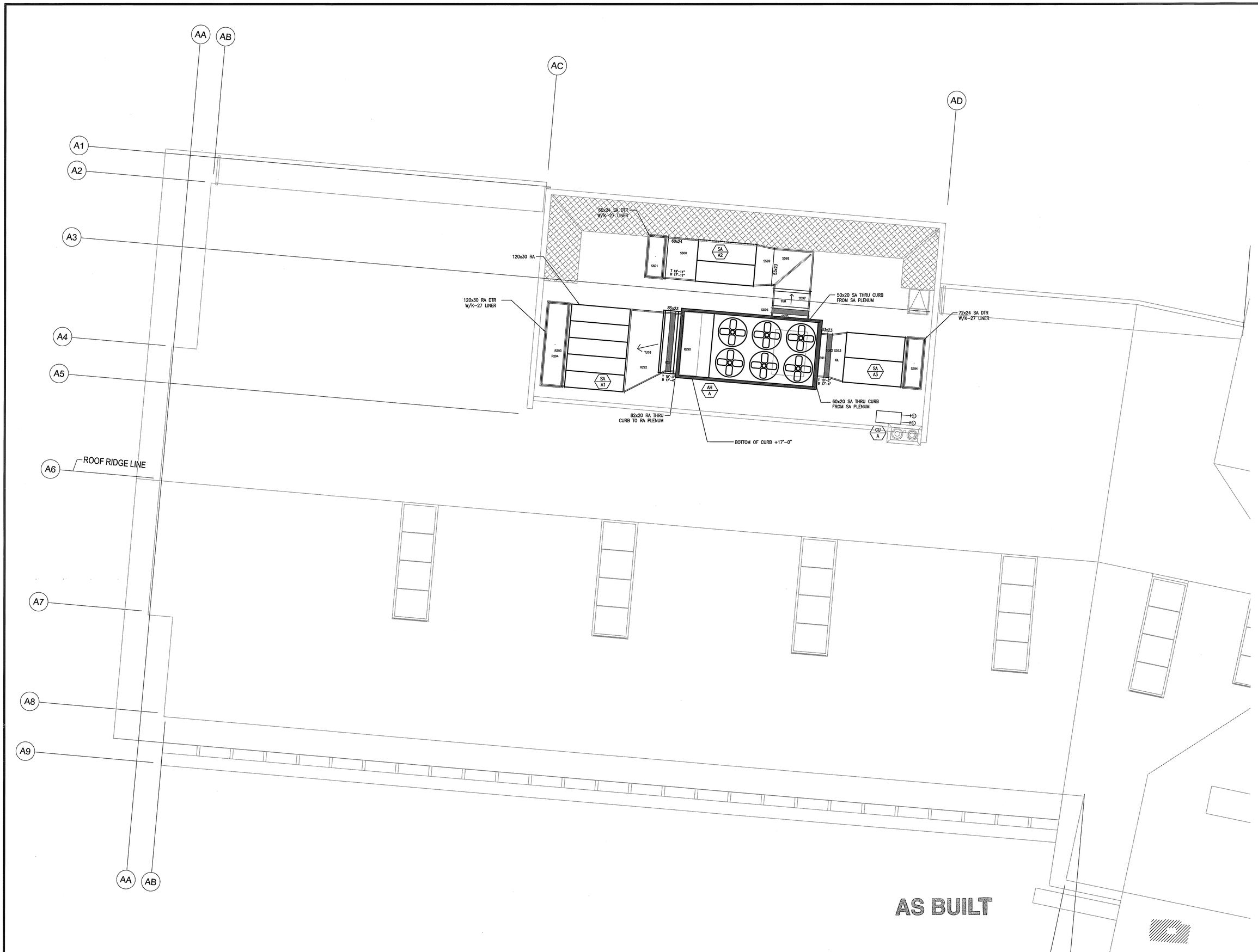

Pacific Rim Mechanical

ENGINEERS + CONTRACTORS
7655 Convoy Court
San Diego, California 92111
(858) 974-6500 FAX: (858) 974-6501
www.prmech.com CA Lic. 814462

HMC ARCHITECTS
3270 INLAND EMPIRE BLVD.
ONTARIO, CALIFORNIA 91764
Telephone: 909 989 9979
Fax: 909 483 2400
www.hmcarchitects.com
Architecture Interiors Planning

ORANGE TERRACE LIBRARY / COMMUNITY CENTER

CITY OF RIVERSIDE DEVELOPMENT DEPARTMENT
3900 MAIN STREET, 5TH FLOOR
RIVERSIDE, CA 92522

A S B U I L T D W G.
THIS DRAWING REPRESENTS INSTALLED MECHANICAL SYSTEM AS WE KNOW IT.

PRM PROJECT MANAGER	DATE
PRM JOBSITE SUPERVISOR	DATE

TITLE: MECHANICAL – BLDG 'A' AREA (A) ROOF PLAN

H:\Orange Terrace Lib and Comm Center\3-07-2465\R-IRIS\TMAS1.dwg Jul 02, 2008 - 2:16pm ID0ao

REVISIONS:
10-18-07 SHOP DRAWING SUBMITTAL

DATE: ——— 07-02-08
DRAWN BY: — DETAILING DEPT.
CHECKED BY:-
PROJECT NO.-

SHEET NO:
MA3.1A

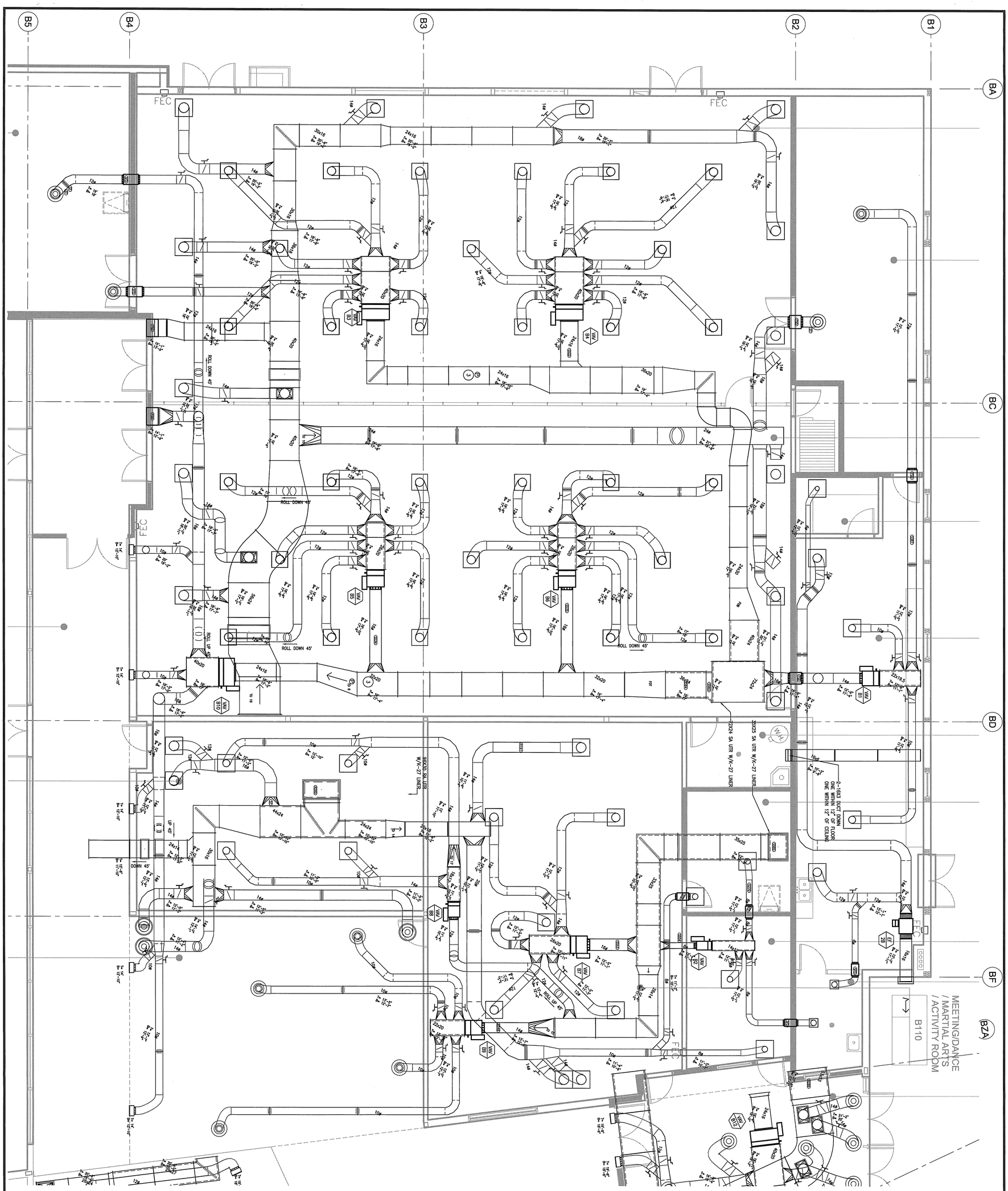

AS BUILT

SHEET NO: MB2.1A

TITLE: MECHANICAL – BLDG 'B' AREA (A) FLOOR PLAN

H:\Orange Terrace Lib and Comm Center\2-07-3465\AS-BUILT\MB21.dwg Jul 02, 2008 – 2:24pm DSpoo

DATE: 07-02-08
DRAWN BY: DETAILING DEPT.
CHECKED BY: -
PROJECT NO: -

REVISIONS:
10-18-07 SHOP DRAWING SUBMITTAL
11-2-07 SHOP DRAWING SUBMITTAL

AS BUILT DWG.
THIS DWG. REPRESENTS AN INSTALLED MECHANICAL SYSTEM AS WE KNOW IT.
PRM PROJECT MANAGER DATE
PRM JOBSITE SUPERVISOR DATE

ORANGE TERRACE LIBRARY / COMMUNITY CENTER
CITY OF RIVERSIDE DEVELOPMENT DEPARTMENT
3900 MAIN STREET, 5TH FLOOR
RIVERSIDE, CA 92522

HMC ARCHITECTS
Architecture Interiors Planning
3270 INLAND EMPIRE BLVD.
ONTARIO, CALIFORNIA 91764
Telephone: 909.989.9979
Fax: 909.483.1400
www.hmcarchitects.com

Pacific Rim Mechanical
ENGINEERS + CONTRACTORS
7655 Convoy Court
San Diego, California 92111
(858) 974-6500 FAX: (858) 974-6501
www.prmech.com CA Lic. 814462

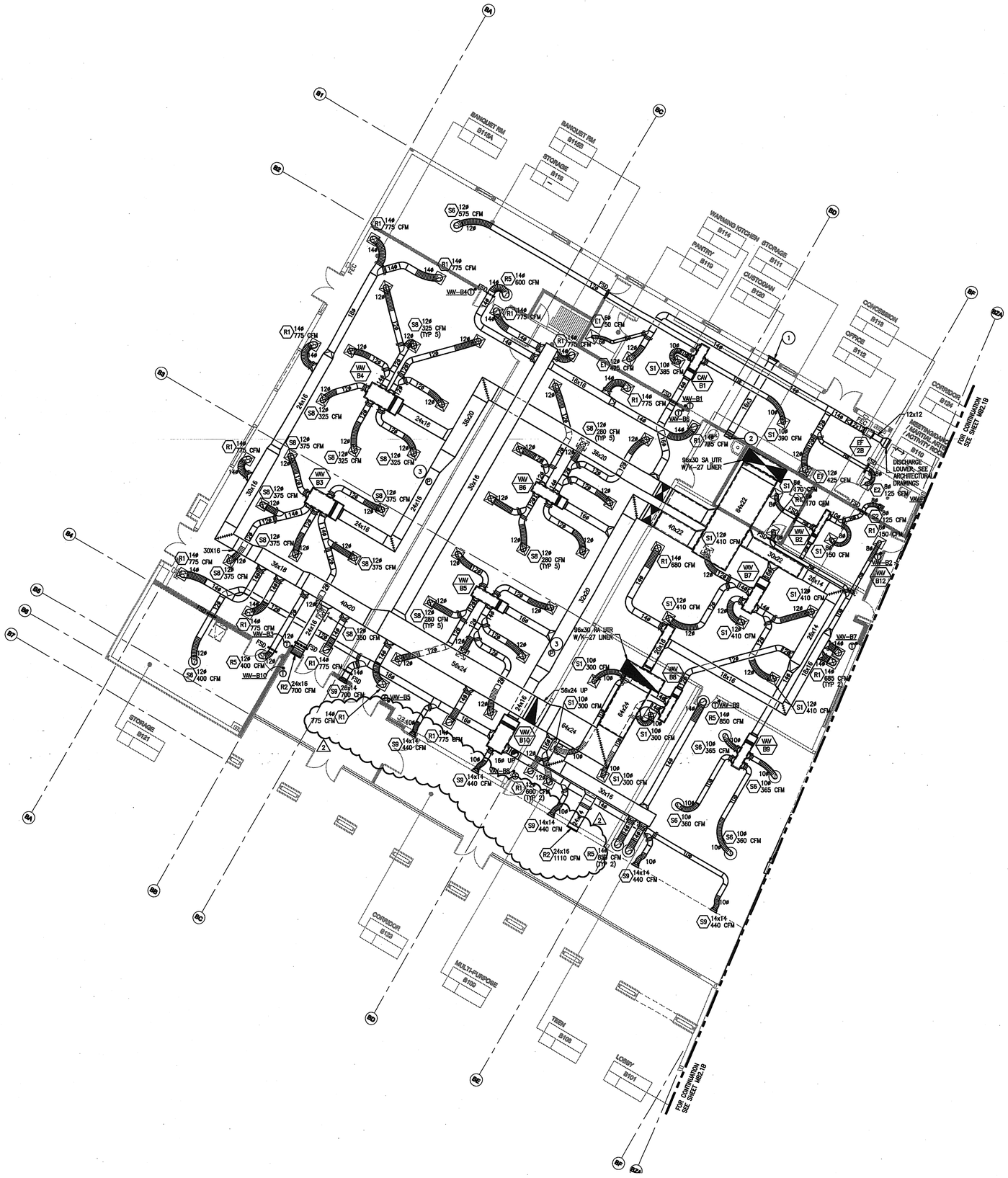

MECHANICAL – BUILDING 'B' AREA (A) FLOOR PLAN

1/8"=1'-0"

NORTH

SHEET NOTES:

1. COMBUSTION AIR INTAKE LOUVER, SEE ARCHITECTURAL DRAWINGS.
2. (2)16x3 COMBUSTION AIR DUCT, SEE SHEET M4.3 DETAIL 7 FOR FURTHER INFORMATION.
3. LOCATION OF DUCT STATIC PRESSURE SENSOR.

HMC ARCHITECTS
Architecture Interiors Planning
3270 INLAND EMPIRE BLVD.
ONTARIO, CALIFORNIA 91764
Telephone: 909 . 989 . 9979
Fax: 909 . 483 . 1400
www. hmcarchitects .com

Pacific Rim Mechanical
ENGINEERS & CONTRACTORS
7655 Convoy Court
San Diego, California 92111
(858) 974-6500 FAX: (858) 974-6501
www.prmech.com CA Lic. 814462

AS BUILT

Key Plan

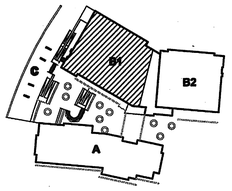

N.T.S.

Consultant's Seal

REGISTERED PROFESSIONAL ENGINEER JOSEPH MUCHA No. M 33043 Exp. 9/09 MECHANICAL STATE OF CALIFORNIA

Agency Approval

Project Title

CITY OF RIVERSIDE

ORANGE TERRACE LIBRARY / COMMUNITY CENTER

PLAN CHECK NO. 07-1397

CITY OF RIVERSIDE DEVELOPMENT DEPARTMENT
3900 MAIN STREET, 5TH FLOOR
RIVERSIDE, CA 92522

HMC ARCHITECTS

No.	Revisions/Submissions	Date:
	Design Development Submittal	12/18/06
	Building Department Submittal	02/12/07
	Building Department Resubmittal	05/17/07
2	Building Department Resubmittal / CA QC Review	06/22/07

Drawing Title

MECHANICAL - BLDG 'B' AREA (A) FLOOR PLAN

Architect's Seal

LICENSED ARCHITECT CHRISTOPHER RICHARD TAYLOR NO. C-19759 REN. 02-24-07 STATE OF CALIFORNIA

Designed:	Project No. 2340001
Drawn:	Scale: AS NOTED
Checked:	Drawing No.
Reviewed:	MB2.1A
Date: 03-12-07	Sheet of #

File Name: H:\Orange Terrace Lib and Comm Center\8-06-3465\Design\City Resubmittal 062207\3465 – MB2.1A.dwg Jun 20,2007-1:33pm

PLEASE RECYCLE 3465 – MB2.1A.DWG

SHEET NOTES:

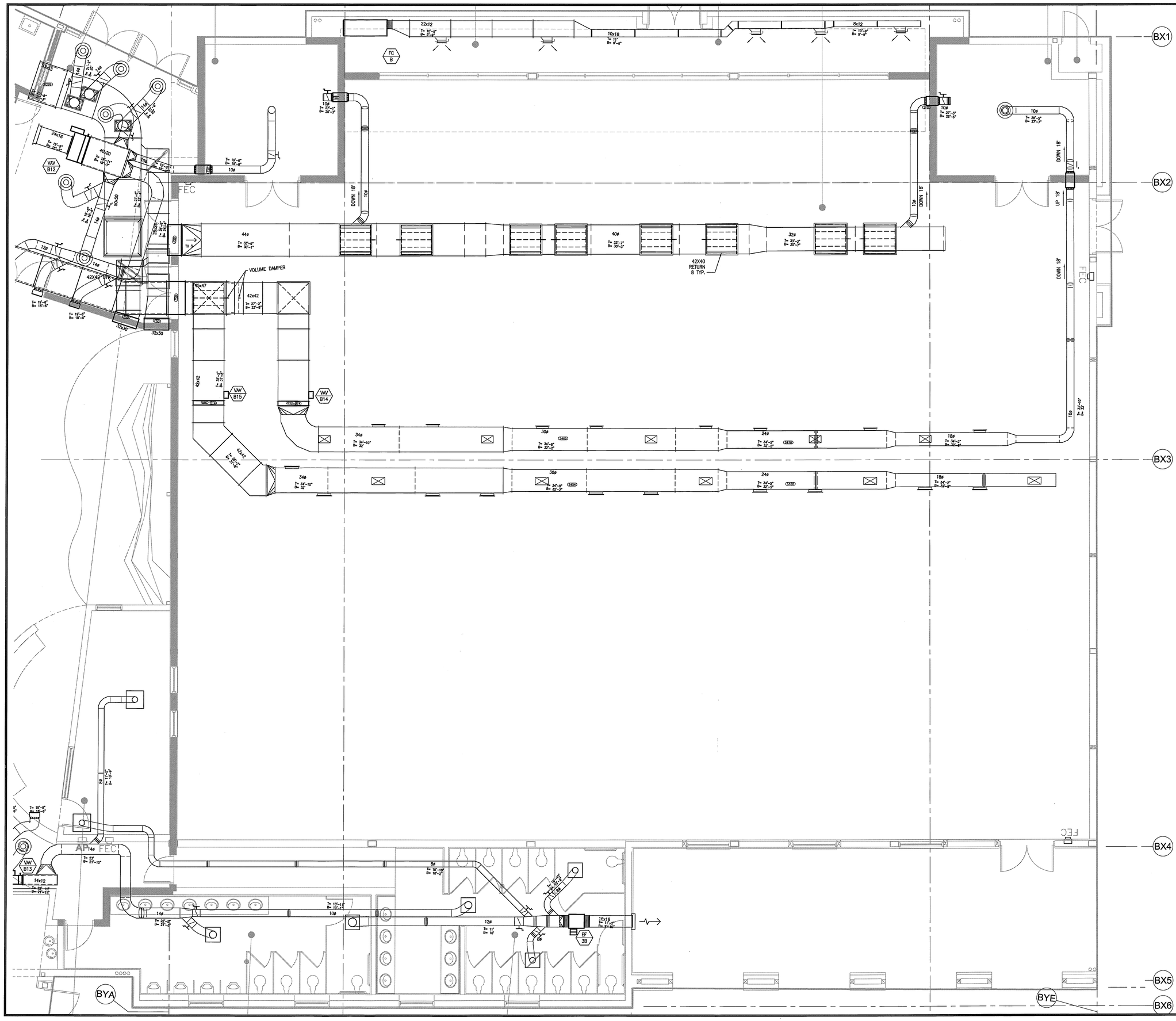

AS BUILT

Pacific Rim Mechanical

ENGINEERS + CONTRACTORS
7655 Convoy Court
San Diego, California 92111
(858) 974-6500 FAX: (858) 974-6501
www.prmech.com CA Lic. 814462

HMC ARCHITECTS
3270 INLAND EMPIRE BLVD.
ONTARIO, CALIFORNIA 91764
Telephone: 909 989 6979
Fax: 909 989 1654
www.hmcarchitects.com
Architecture Interiors Planning

ORANGE TERRACE LIBRARY / COMMUNITY CENTER

CITY OF RIVERSIDE DEVELOPMENT DEPARTMENT
3900 MAIN STREET, 5TH FLOOR
RIVERSIDE, CA 92522

AS BUILT D.W.G.
THIS DWG. REPRESENTS AS INSTALLED MECHANICAL SYSTEM AS WE KNOW IT.

PRM PROJECT MANAGER	DATE
PRM JOBSITE SUPERVISOR	DATE

TITLE: MECHANICAL – BLDG 'B' AREA (B) FLOOR PLAN

I:\Orange Terrace Lib and Comm Center\2-07-3400\AS-BUILT\MB21.dwg Jul 10, 2008 - 12:23pm DGeoo

REVISIONS:
10-18-07 SHOP DRAWING SUBMITTAL
11-2-07 SHOP DRAWING SUBMITTAL

DATE: 9-17-07
DRAWN BY: —
CHECKED BY: —
PROJECT NO: -

SHEET NO: MB2.1B

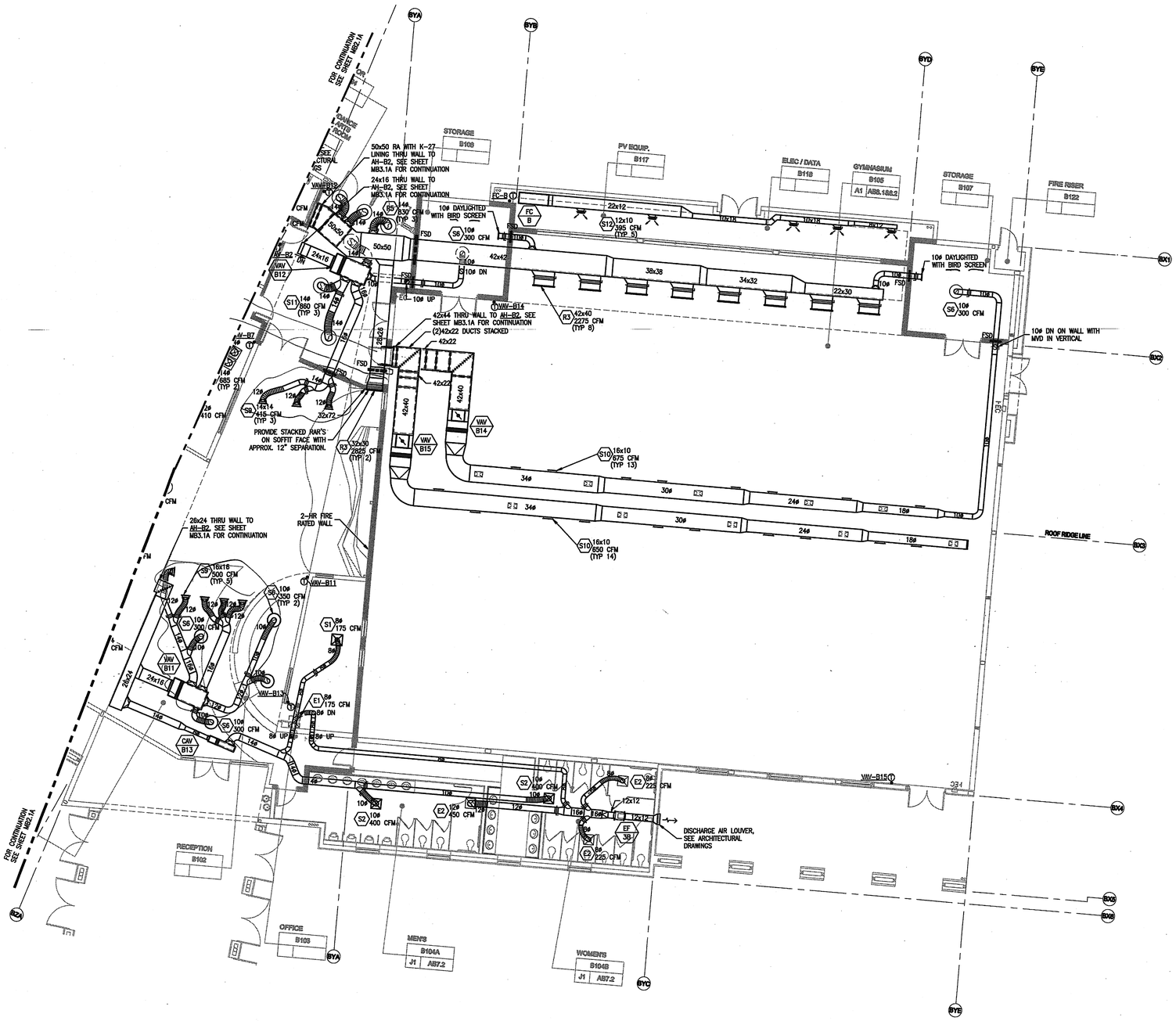

GENERAL SHEET NOTE:

REFER TO THE ARCHITECTURAL DRAWINGS FOR LOCATIONS AND DURATION OF ALL FIRE RATED ASSEMBLIES.

MECHANICAL – BUILDING 'B' AREA (B) FLOOR PLAN

1/8"=1'-0"

NORTH

HMC ARCHITECTS
Architecture Interiors Planning
3270 INLAND EMPIRE BLVD.
ONTARIO, CALIFORNIA 91764
Telephone: 909 . 989 . 9979
Fax: 909 . 483 . 1400
www. hmcarchitects .com

Pacific Rim Mechanical
ENGINEERS & CONTRACTORS
7655 Convoy Court
San Diego, California 92111
(858) 974-6500 FAX: (858) 974-6501
www.prmech.com CA Lic. 814462

AS BUILT

Key Plan

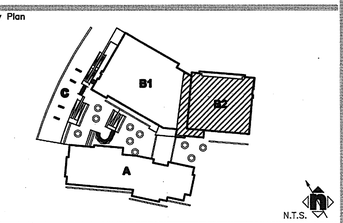

Consultant's Seal

REGISTERED PROFESSIONAL ENGINEER JOSEPH MUCKER No. M 30343 Exp. 6/08 MECHANICAL STATE OF CALIFORNIA

Agency Approval

Project Title

CITY OF RIVERSIDE

ORANGE TERRACE LIBRARY / COMMUNITY CENTER

PLAN CHECK NO. 07-1397

CITY OF RIVERSIDE DEVELOPMENT DEPARTMENT
3900 MAIN STREET, 5TH FLOOR
RIVERSIDE, CA 92522

HMC ARCHITECTS

No.	Revisions/Submissions	Date:
	Design Development Submittal	12/18/06
	~~Building Department Submittal~~	~~02/12/07~~
	Building Department Resubmittal	05/17/07
	Building Department Resubmittal / QA QC Review	06/22/07

Drawing Title **MECHANICAL - BLDG 'B' AREA (B) FLOOR PLAN**

Architect's Seal

LICENSED ARCHITECT CHRISTOPHER RICHARD VINCIA LICENSE NO. C-19759 EXP. 02-24-07 STATE OF CALIFORNIA

Designed:	Project No. 2340001
Drawn:	Scale: AS NOTED
Checked:	Drawing No.
Reviewed:	MB2.1B
Date: 03-12-07	Sheet of ##

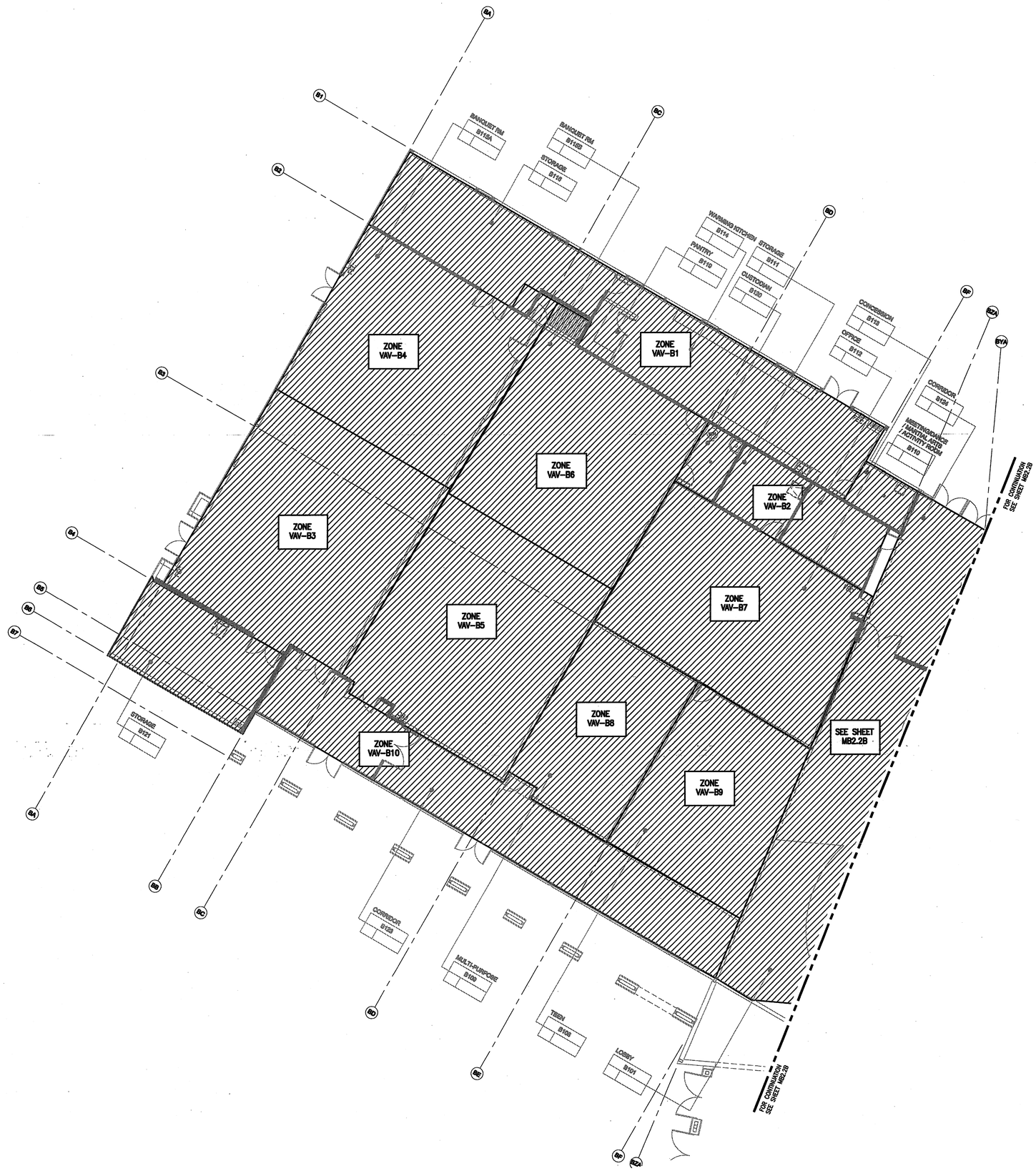

SHEET NOTES:

SEE SHEET MB2.1A FOR LOCATIONS OF THERMOSTATS.

MECHANICAL – BUILDING 'B' AREA (A) ZONE PLAN

1/8"=1'-0"

NORTH

HMC ARCHITECTS
Architecture Interiors Planning
3270 INLAND EMPIRE BLVD.
ONTARIO, CALIFORNIA 91764
Telephone: 909 . 989 . 9979
Fax: 909 . 483 . 1400
www. hmcarchitects .com

Pacific Rim Mechanical
ENGINEERS & CONTRACTORS
7655 Convoy Court
San Diego, California 92111
(858) 974-6500 FAX: (858) 974-6501
www.prmech.com CA Lic. 814462

AS BUILT

Key Plan

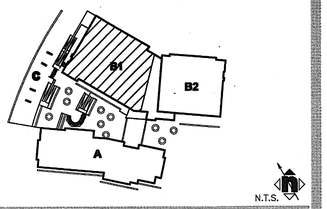

Consultant's Seal

REGISTERED PROFESSIONAL ENGINEER JOSEPH MUCCI No. M 30442 Exp. 6/30 MECHANICAL STATE OF CALIFORNIA

Agency Approval

Project Title

CITY OF RIVERSIDE

ORANGE TERRACE LIBRARY / COMMUNITY CENTER

PLAN CHECK NO. 07-1397

CITY OF RIVERSIDE DEVELOPMENT DEPARTMENT
3900 MAIN STREET, 5TH FLOOR
RIVERSIDE, CA 92522

HMC ARCHITECTS

No.	Revisions/Submissions	Date:
	Design Development Submittal	12/18/06
	~~Building Department Submittal~~	~~02/12/07~~
	Building Department Resubmittal	05/17/07
	Building Department Resubmittal / QA QC Review	06/22/07

Drawing Title

MECHANICAL - BLDG 'B' AREA (A) ZONE PLAN

Architect's Seal

LICENSED ARCHITECT CHRISTOPHER RICHARD TAYLOR No. C-19759 REN. 02-04-07 STATE OF CALIFORNIA

Designed:	Project No. 2340001
Drawn:	Scale: AS NOTED
Checked:	Drawing No.
Reviewed:	MB2.2A
Date: 03-12-07	Sheet of ##

TRUE NORTH

SHEET NOTES:

SEE SHEET MB2.1B FOR LOCATIONS OF THERMOSTATS.

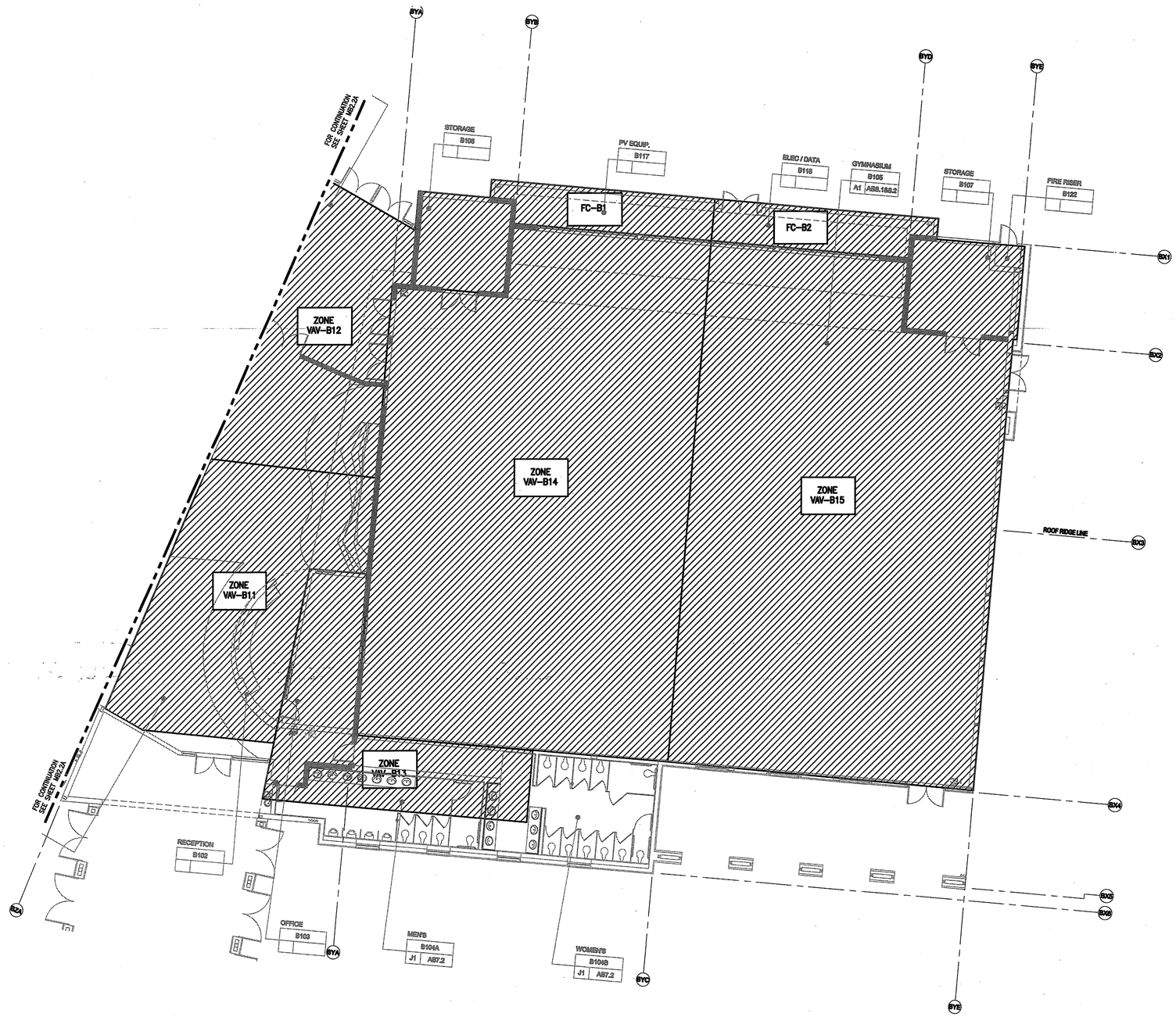

MECHANICAL – BUILDING 'B' AREA (B) ZONE PLAN

1/8"=1'-0"

NORTH

HMC ARCHITECTS
Architecture Interiors Planning
3270 INLAND EMPIRE BLVD.
ONTARIO, CALIFORNIA 91764
Telephone: 909 . 989 . 9979
Fax: 909 . 483 . 1400
www. hmcarchitects .com

Pacific Rim Mechanical
ENGINEERS & CONTRACTORS
7655 Convoy Court
San Diego, California 92111
(858) 974-6500 FAX: (858) 974-6501
www.prmech.com CA Lic. 814462

AS BUILT

Key Plan

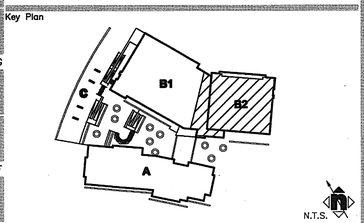

Consultant's Seal

REGISTERED PROFESSIONAL ENGINEER JOSEPH MUCHA No. M 30348 Exp. 6/30 MECHANICAL STATE OF CALIFORNIA

Agency Approval

Project Title

CITY OF RIVERSIDE

ORANGE TERRACE LIBRARY / COMMUNITY CENTER

PLAN CHECK NO. 07-1397

CITY OF RIVERSIDE DEVELOPMENT DEPARTMENT
3900 MAIN STREET, 5TH FLOOR
RIVERSIDE, CA 92522

SM HMC ARCHITECTS

No.	Revisions/Submissions	Date:
	Design Development Submittal	12/18/06
	Building Department Submittal	02/12/07
	Building Department Resubmittal	05/17/07
	Building Department Resubmittal / QA QC Review	06/22/07

Drawing Title **MECHANICAL - BLDG 'B' AREA (B) ZONE PLAN**

Architect's Seal

LICENSED ARCHITECT CHRISTOPHER RICHARD TAYLOR NO. C-19759 REN. 02-24-09 STATE OF CALIFORNIA

Designed:	Project No. 2340001
Drawn:	Scale: AS NOTED
Checked:	Drawing No.
Reviewed:	MB2.2B
Date: 03-12-07	Sheet of #

File Name: H:\Orange Terrace Lib and Comm Center\8-06-3465\Design\City Resubmittal 062207\3465 – MB2.2B.dwg Jun 20,2007-1:34pm

PLEASE RECYCLE 3465 – MB2.2B.DWG

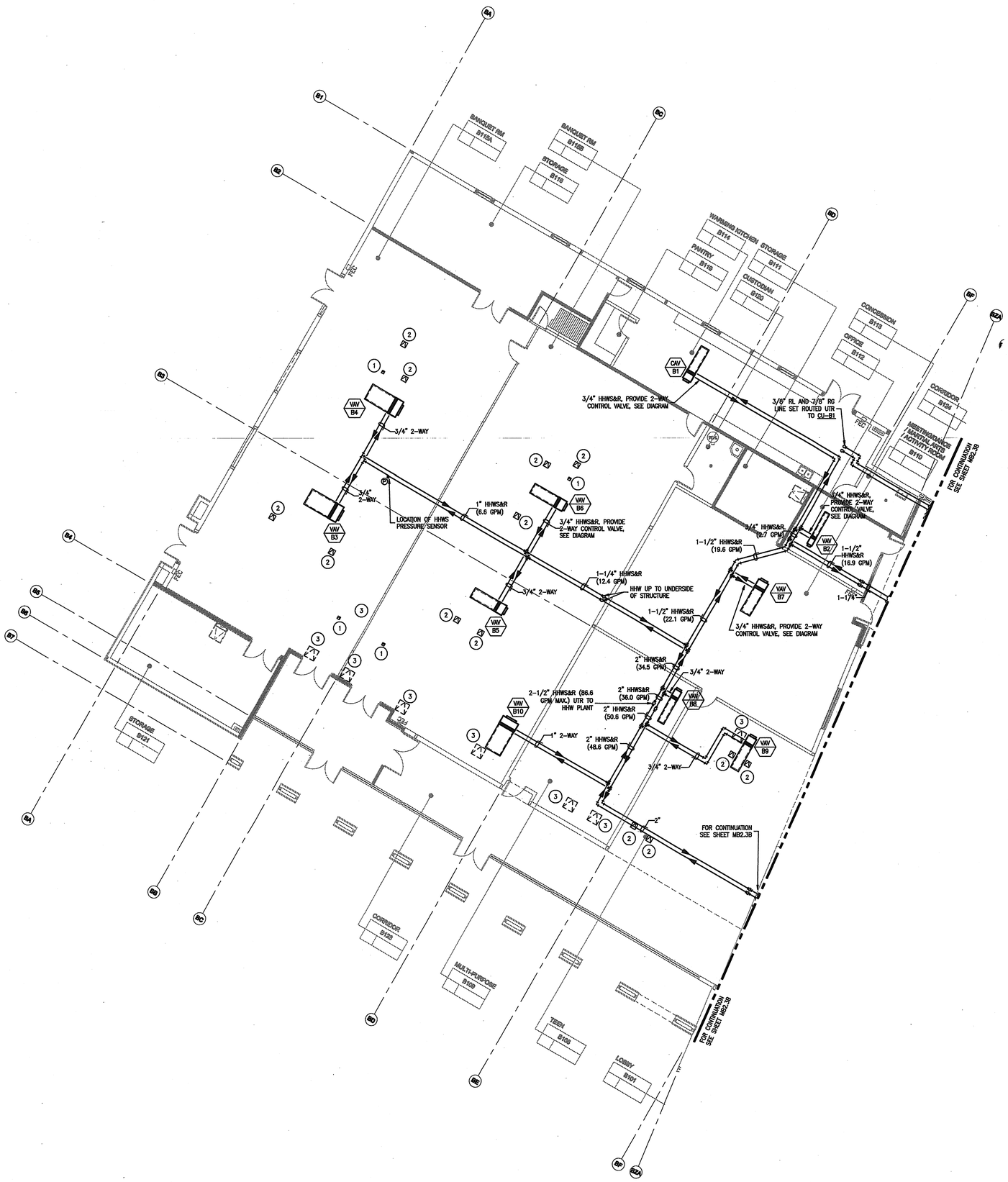

MECHANICAL – BUILDING 'B' AREA (A) PIPING PLAN

1/8"=1'-0"

NORTH

GENERAL SHEET NOTE:

1. REFER TO THE ARCHITECTURAL DRAWINGS FOR LOCATIONS AND DURATION OF ALL FIRE RATED ASSEMBLIES.
2. MECHANICAL CONTRACTOR SHALL LAY-OUT AND COORDINATE SIZE LOCATIONS OF ALL ACCESS PANELS. NOT ALL ACCESS PANELS THAT MAY BE REQUIRED ARE SHOWN.

SHEET NOTES:

1. PROVIDE 6x6 CEILING ACCES PANEL AT THIS LOCATION.
2. PROVIDE 12x12 CEILING ACCES PANEL AT THIS LOCATION.
3. PROVIDE 24x24 CEILING ACCES PANEL AT THIS LOCATION.

HMC ARCHITECTS
Architecture Interiors Planning
3270 INLAND EMPIRE BLVD.
ONTARIO, CALIFORNIA 91764
Telephone: 909 . 989 . 9979
Fax: 909 . 483 . 1400
www. hmcarchitects .com

Pacific Rim Mechanical
ENGINEERS & CONTRACTORS
7655 Convoy Court
San Diego, California 92111
(858) 974-6500 FAX: (858) 974-6501
www.prmech.com CA Lic. 814462

AS BUILT

Key Plan

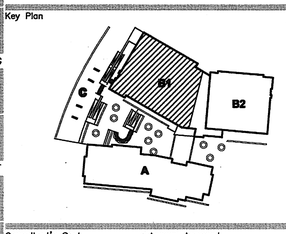

N.T.S.

Consultant's Seal

REGISTERED PROFESSIONAL ENGINEER JOSEPH MICHAEL MECHANICAL STATE OF CALIFORNIA

Agency Approval

Project Title

CITY OF RIVERSIDE

ORANGE TERRACE LIBRARY / COMMUNITY CENTER

PLAN CHECK NO. 07-1397

CITY OF RIVERSIDE DEVELOPMENT DEPARTMENT
3900 MAIN STREET, 5TH FLOOR
RIVERSIDE, CA 92522

HMC ARCHITECTS

No.	Revisions/Submissions	Date:
	Design Development Submittal	12/18/06
	~~Building Department Submittal~~	~~03/12/07~~
	Building Department Resubmittal	05/17/07
	Building Department Resubmittal / QA QC Review	06/22/07

Drawing Title

MECHANICAL - BLDG 'B' AREA (A) PIPING PLAN

Architect's Seal

LICENSED ARCHITECT CHRISTOPHER RICHARD TAYLOR NO. C-19759 REN. 02-24-07 STATE OF CALIFORNIA

Designed:	Project No. 2340001
Drawn:	Scale: AS NOTED
Checked:	Drawing No.
Reviewed:	MB2.3A
Date: 03-12-07	Sheet of #

GENERAL SHEET NOTE:

1. REFER TO THE ARCHITECTURAL DRAWINGS FOR LOCATIONS AND DURATION OF ALL FIRE RATED ASSEMBLIES.
2. MECHANICAL CONTRACTOR SHALL LAY-OUT AND COORDINATE SIZE LOCATIONS OF ALL ACCESS PANELS. NOT ALL ACCESS PANELS THAT MAY BE REQUIRED ARE SHOWN.

SHEET NOTES:

1. PROVIDE 6x6 CEILING ACCES PANEL AT THIS LOCATION.
2. PROVIDE 12x12 CEILING ACCES PANEL AT THIS LOCATION.
3. PROVIDE 24x24 CEILING ACCES PANEL AT THIS LOCATION.

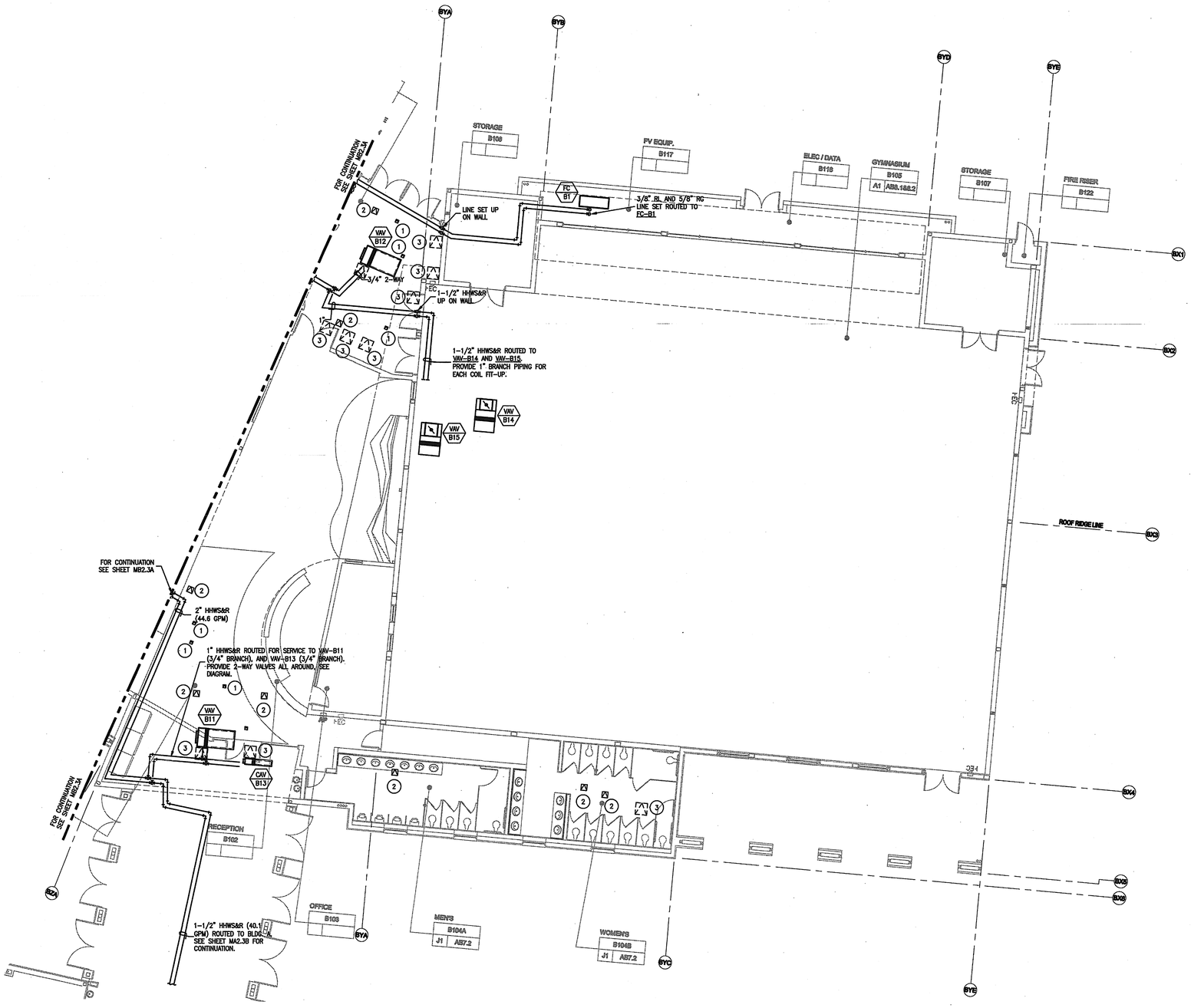

MECHANICAL – BUILDING 'B' AREA (B) FLOOR PLAN

1/8"=1'-0"

NORTH

HMC ARCHITECTS
Architecture Interiors Planning
3270 INLAND EMPIRE BLVD.
ONTARIO, CALIFORNIA 91764
Telephone: 909.989.9979
Fax: 909.483.1400
www.hmcarchitects.com

Pacific Rim Mechanical
ENGINEERS & CONTRACTORS
7655 Convoy Court
San Diego, California 92111
(858) 974-6500 FAX: (858) 974-6501
www.prmech.com CA Lic. 814462

AS BUILT

Key Plan

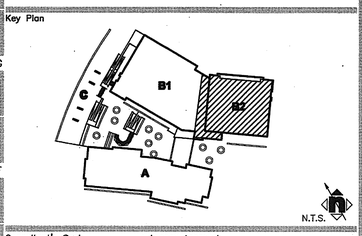

Consultant's Seal

REGISTERED PROFESSIONAL ENGINEER JOSEPH MICHAEL MEHRAMJAN M 30340 EXP. 09/06 MECHANICAL STATE OF CALIFORNIA

Agency Approval

Project Title

CITY OF RIVERSIDE

ORANGE TERRACE LIBRARY / COMMUNITY CENTER

PLAN CHECK NO. 07-1397

CITY OF RIVERSIDE DEVELOPMENT DEPARTMENT
3900 MAIN STREET, 5TH FLOOR
RIVERSIDE, CA 92522

HMC ARCHITECTS

No.	Revisions/Submissions	Date:
	Design Development Submittal	12/18/06
	~~Building Department Submittal~~	~~03/12/07~~
	Building Department Resubmittal	05/17/07
	Building Department Resubmittal / QA QC Review	06/22/07

Drawing Title

MECHANICAL - BLDG 'B' AREA (B) PIPING PLAN

Architect's Seal

LICENSED ARCHITECT CHRISTOPHER RICHARD TAYLOR REG. NO. C-19759 REN. 02-24-07 STATE OF CALIFORNIA

Designed:	Project No. 2340001
Drawn:	Scale: AS NOTED
Checked:	Drawing No.
Reviewed:	MB2.3B
Date: 03-12-07	Sheet of #

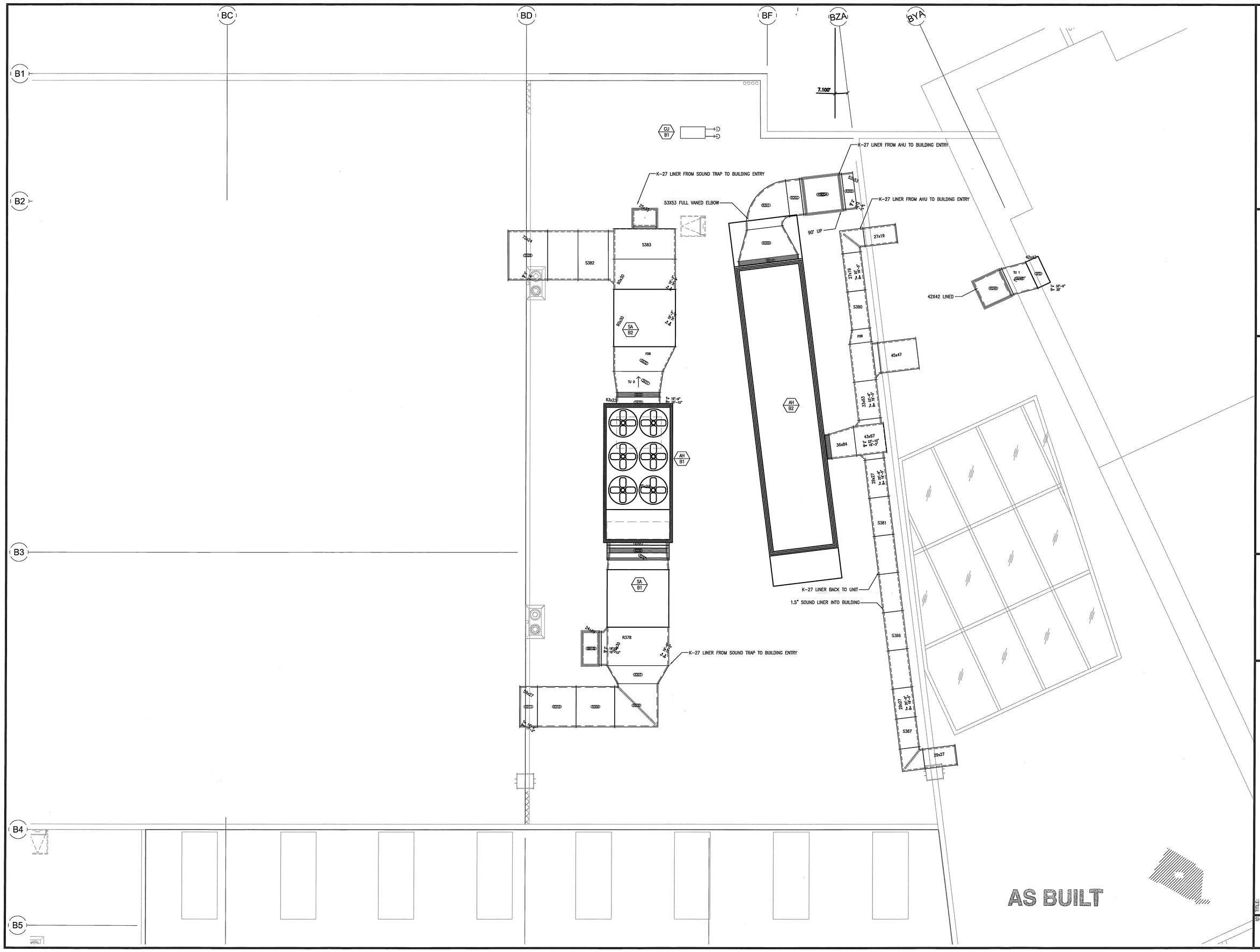

Pacific Rim Mechanical

ENGINEERS + CONTRACTORS
7655 Convoy Court
San Diego, California 92111
(858) 974-6500 FAX: (858) 974-6501
www.prmech.com CA Lic. 814462

HMC ARCHITECTS
3270 INLAND EMPIRE BLVD.
ONTARIO, CALIFORNIA 91764
Telephone: 909 989 9979
Fax: 909 989 9980
www.hmcarchitects.com
Architecture Interiors Planning

ORANGE TERRACE LIBRARY / COMMUNITY CENTER

CITY OF RIVERSIDE DEVELOPMENT DEPARTMENT
3900 MAIN STREET, 5TH FLOOR
RIVERSIDE, CA 92522

A S B U I L T D W G.
THIS DWG REPRESENTS AN INSTALLED MECHANICAL SYSTEM AS WE KNOW IT.

PRM PROJECT MANAGER	DATE
PRM JOBSITE SUPERVISOR	DATE

TITLE:
MECHANICAL - BLDG 'B' AREA (A) ROOF PLAN

m:\Orange Terrace Lib and Comm Center\2-07-3465\A6-BUILT\MB3.1.dwg Jul 02, 2008 - 2:50pm DBace

DATE: 07-02-08
DRAWN BY: DETAILING DEPT.
CHECKED BY:-
PROJECT NO:-

REVISIONS:
10-18-07 SHOP DRAWING SUBMITTAL

SHEET NO:
MB3.1A

MECHANICAL – BUILDING 'B' AREA (A) ROOF PLAN
1/8"=1'-0"

HMC ARCHITECTS
Architecture Interiors Planning
3270 INLAND EMPIRE BLVD.
ONTARIO, CALIFORNIA 91764
Telephone: 909.989.9979
Fax: 909.483.1400
www.hmcarchitects.com

Pacific Rim Mechanical
ENGINEERS & CONTRACTORS
7655 Convoy Court
San Diego, California 92111
(858) 974-6500 FAX: (858) 974-6501
www.prmech.com CA Lic. 814462

AS BUILT

Key Plan

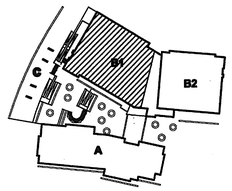

N.T.S.

Consultant's Seal

REGISTERED PROFESSIONAL ENGINEER JOSEPH MUSTER M 15543 Exp. 6/30/08 MECHANICAL STATE OF CALIFORNIA

Agency Approval

Project Title

CITY OF RIVERSIDE

ORANGE TERRACE LIBRARY / COMMUNITY CENTER

PLAN CHECK NO. 07-1397

CITY OF RIVERSIDE DEVELOPMENT DEPARTMENT
3900 MAIN STREET, 5TH FLOOR
RIVERSIDE, CA 92522

HMC ARCHITECTS

No.	Revisions/Submissions	Date:
	Design Development Submittal	12/18/06
	~~Building Department Submittal~~	~~03/12/07~~
	Building Department Resubmittal	05/17/07
	Building Department Resubmittal / QA QC Review	06/22/07

Drawing Title **MECHANICAL - BLDG 'B' AREA (A) ROOF PLAN**

Architect's Seal

LICENSED ARCHITECT CHRISTOPHER RICHARD TAYLOR LICENSE NO. C-19759 EXPIRES 02-24-07 STATE OF CALIFORNIA

Designed:	Project No. 2340001
Drawn:	Scale: AS NOTED
Checked:	Drawing No.
Reviewed:	MB3.1A
Date: 03-12-07	Sheet of #

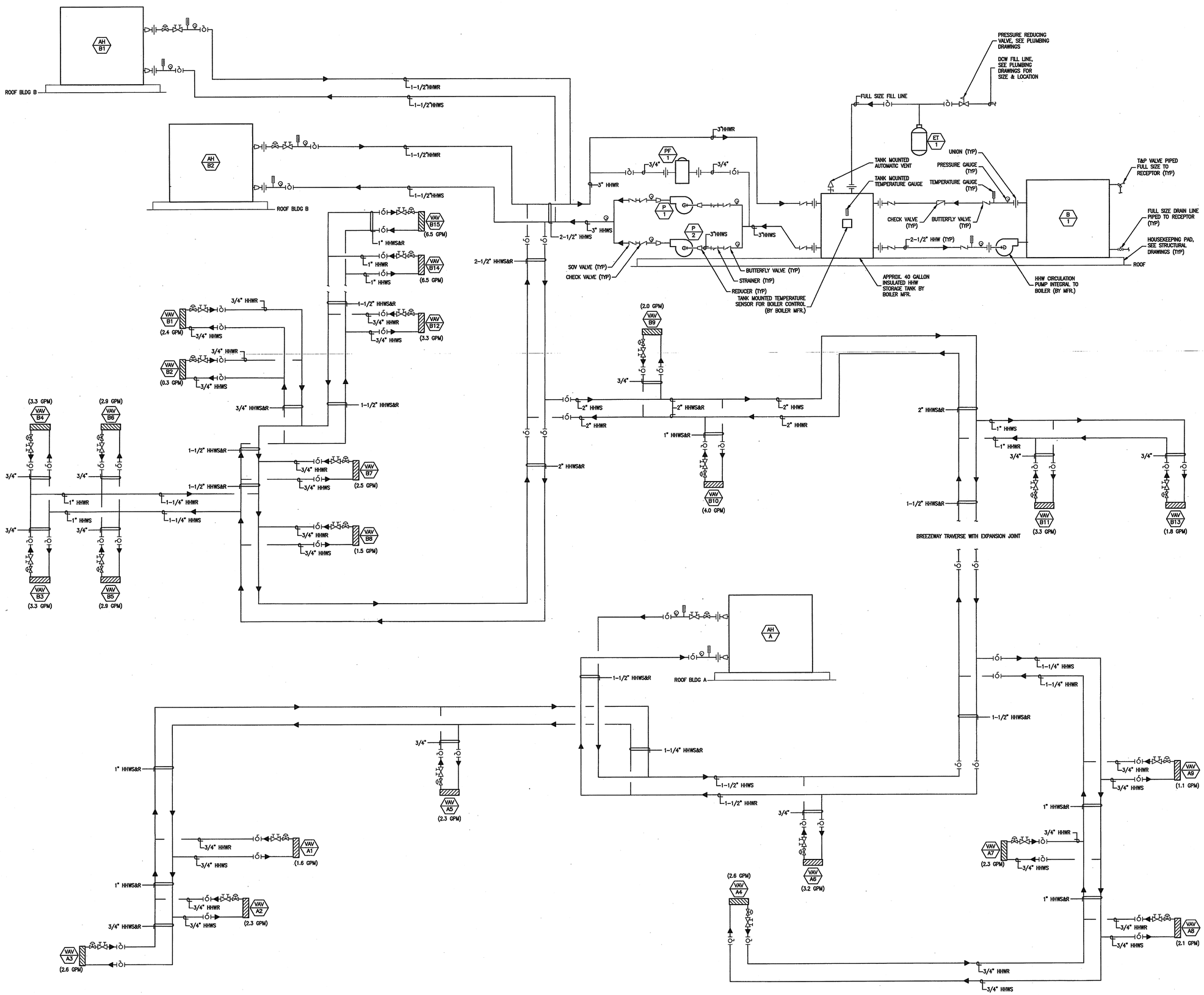

HMC ARCHITECTS
Architecture Interiors Planning
3270 INLAND EMPIRE BLVD.
ONTARIO, CALIFORNIA 91764
Telephone: 909.989.9979
Fax: 909.483.1400
www.hmcarchitects.com

Pacific Rim Mechanical
ENGINEERS & CONTRACTORS
7655 Convoy Court
San Diego, California 92111
(858) 974-6500 FAX: (858) 974-6501
www.prmech.com CA Lic. 814462

AS BUILT

Key Plan

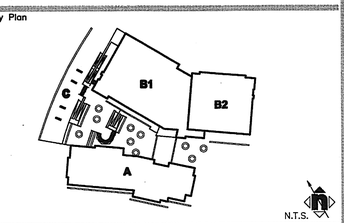

Consultant's Seal

REGISTERED PROFESSIONAL ENGINEER
JAMES P. MUCKER
No. M 30969
EXP. 9/30
MECHANICAL
STATE OF CALIFORNIA

Agency Approval

Project Title

CITY OF RIVERSIDE

ORANGE TERRACE LIBRARY / COMMUNITY CENTER

PLAN CHECK NO. 07-1397

CITY OF RIVERSIDE DEVELOPMENT DEPARTMENT
3900 MAIN STREET, 5TH FLOOR
RIVERSIDE, CA 92522

HMC ARCHITECTS

No.	Revisions/Submissions	Date:
	Design Development Submittal	12/18/06
	Building Department Submittal	02/15/07
	Building Department Resubmittal	05/17/07
	Building Department Resubmittal / QA QC Review	06/22/07

Drawing Title

MECHANICAL - HEATING HOT WATER DIAGRAM

Architect's Seal

LICENSED ARCHITECT
CHRISTOPHER RICHARD TAYLOR
LICENSE NO. C-19759
REN. 02-24-10
STATE OF CALIFORNIA

Designed:	Project No. 2340001
Drawn:	Scale: AS NOTED
Checked:	Drawing No.
Reviewed:	M4.1
Date: 03-12-07	Sheet of 11

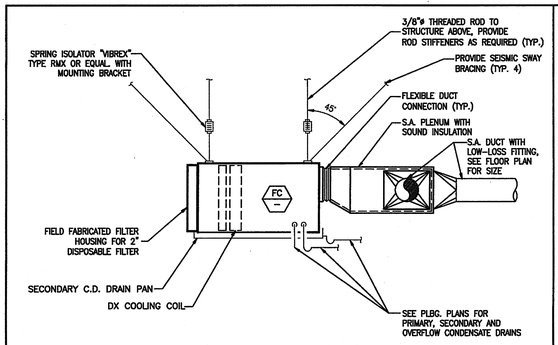

FAN COIL UNIT DETAIL — SCALE NONE — 4

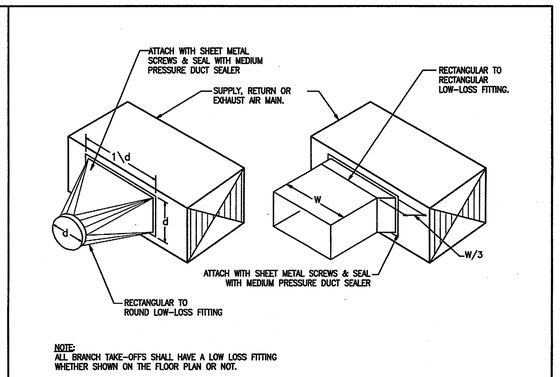

NOTE:
ALL BRANCH TAKE-OFF'S SHALL HAVE A LOW LOSS FITTING WHETHER SHOWN ON THE FLOOR PLAN OR NOT.

LO-LOSS FITTING DETAIL — SCALE NONE — 1

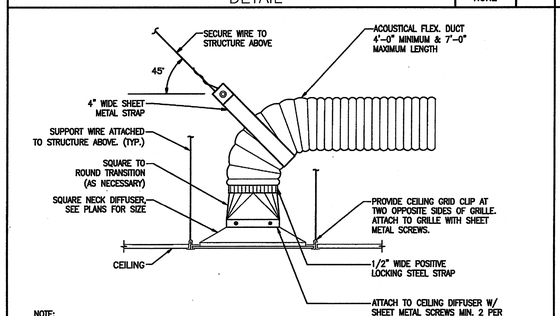

NOTE:
1. ALL FLEX. DUCT CONNECTIONS SHALL BE INTERNALLY LINED.
2. RETURN & EXHAUST AIR REGISTERS SIMILAR.
3. PAINT INTERIOR OF RETURN AIR REGISTER & ACOUSTICAL FLEX. DUCT OPENING FLAT BLACK.

CEILING RETURN REGISTER DETAIL — SCALE NONE — 5

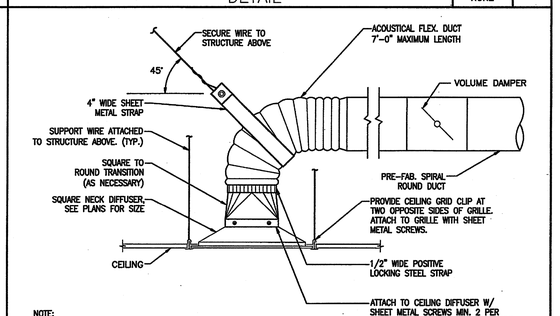

NOTE:
1. ALL FLEX. DUCT CONNECTIONS SHALL BE INTERNALLY LINED.
2. RETURN & EXHAUST AIR REGISTERS SIMILAR.
3. PAINT INTERIOR OF RETURN AIR REGISTER & ACOUSTICAL FLEX. DUCT OPENING FLAT BLACK.

CEILING DIFFUSER/REGISTER DETAIL — SCALE NONE — 2

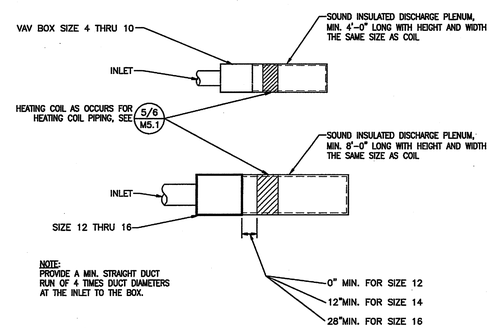

NOTE:
PROVIDE A MIN. STRAIGHT DUCT RUN OF 4 TIMES DUCT DIAMETERS AT THE INLET TO THE BOX.

VAV BOX DETAIL — SCALE NONE — 6

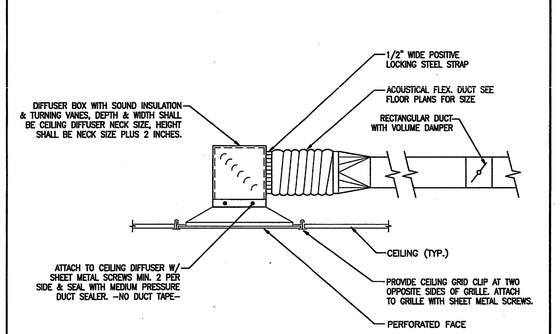

CEILING DIFFUSER (SPACE SAVING) DETAIL — SCALE NONE — 3

HMC ARCHITECTS
Architecture Interiors Planning
3270 INLAND EMPIRE BLVD.
ONTARIO, CALIFORNIA 91764
Telephone: 909.989.9979
Fax: 909.483.1400
www.hmcarchitects.com

Pacific Rim Mechanical
ENGINEERS & CONTRACTORS
7655 Convoy Court
San Diego, California 92111
(858) 974-6500 FAX: (858) 974-6501
www.prmech.com CA Lic. 814462

AS BUILT

Key Plan

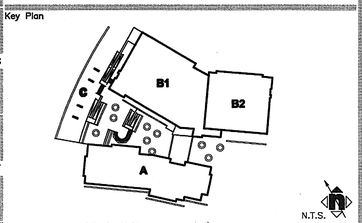

Consultant's Seal

REGISTERED PROFESSIONAL ENGINEER JOSEPH MICHAEL FOR 2006 MECHANICAL STATE OF CALIFORNIA

Agency Approval

Project Title

CITY OF RIVERSIDE

ORANGE TERRACE LIBRARY / COMMUNITY CENTER
PLAN CHECK NO. 07-1397
CITY OF RIVERSIDE DEVELOPMENT DEPARTMENT
3900 MAIN STREET, 5TH FLOOR
RIVERSIDE, CA 92522

HMC ARCHITECTS

No.	Revisions/Submissions	Date:
	Design Development Submittal	12/19/06
	Building Department Submittal	03/12/07
	Building Department Resubmittal	05/17/07
	Building Department Resubmittal / QA QC Review	06/22/07

Drawing Title

MECHANICAL - DETAILS

Architect's Seal

LICENSED ARCHITECT CHRISTOPHER RICHARD TAYLOR NO. C-19759 REN. 02-24-07 STATE OF CALIFORNIA

Designed:	Project No. 2340001
Drawn:	Scale: AS NOTED
Checked:	Drawing No.
Reviewed:	M4.2
Date: 03-12-07	Sheet of #

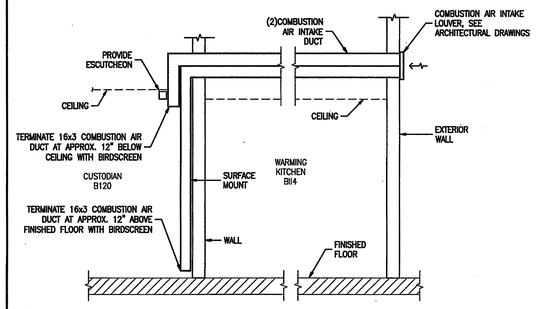

COMBUSTION AIR DUCT FOR BLDG. B DETAIL — SCALE NONE — 7

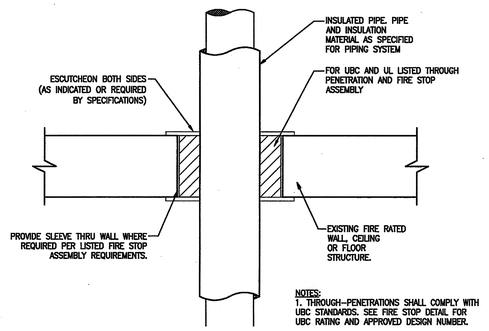

INSULATED PIPE THRU RATED STRUCTURE DETAIL — SCALE NONE — 4

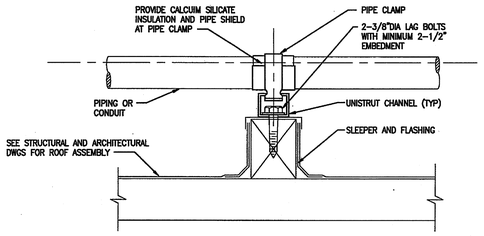

PIPE SUPPORT ON ROOF DETAIL — SCALE NONE — 1

NOT USED — SCALE NONE — 5

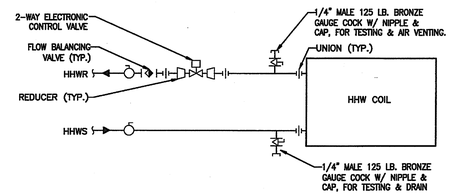

2-WAY REHEAT COIL PIPING DETAIL — SCALE NONE — 2

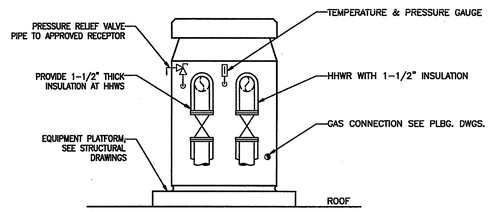

RAYPAK GAS FIRED BOILER DETAIL — SCALE NONE — 6

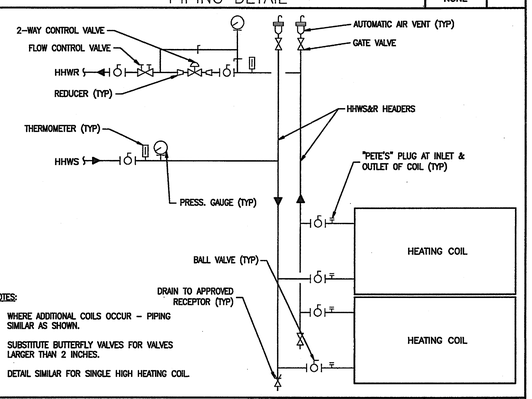

AH UNIT HEATING COIL PIPING DETAIL — SCALE NONE — 3

HMC ARCHITECTS
Architecture Interiors Planning
3270 INLAND EMPIRE BLVD.
ONTARIO, CALIFORNIA 91764
Telephone: 909.989.9979
Fax: 909.483.1400
www.hmcarchitects.com

Pacific Rim Mechanical
ENGINEERS & CONTRACTORS
7655 Convoy Court
San Diego, California 92111
(858) 974-6500 FAX: (858) 974-6501
www.prmech.com CA Lic. 814462

AS BUILT

Key Plan

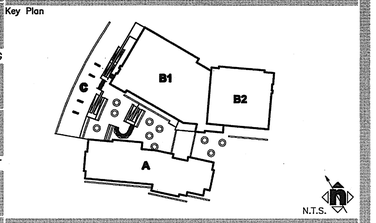

Consultant's Seal

Agency Approval

Project Title

ORANGE TERRACE LIBRARY / COMMUNITY CENTER
PLAN CHECK NO. 07-1397
CITY OF RIVERSIDE DEVELOPMENT DEPARTMENT
3900 MAIN STREET, 5TH FLOOR
RIVERSIDE, CA 92522

HMC ARCHITECTS

No.	Revisions/Submissions	Date:
	Design Development Submittal	12/18/06
	Building Department Submittal	03/12/07
	Building Department Resubmittal	05/17/07
	Building Department Resubmittal / QA QC Review	06/22/07

Drawing Title

MECHANICAL - DETAILS

Architect's Seal

Designed:	Project No. 2340001
Drawn:	Scale: AS NOTED
Checked:	Drawing No.
Reviewed:	M4.3
Date: 03-12-07	Sheet of #

DDC SYSTEM ARCHITECTURE:
THE BUILDING DIRECT DIGITAL CONTROL (DDC) SYSTEM SHALL BE A FULLY INTEGRATED LON-WORKS SYSTEM. MONITORING AND CONTROL OF THE HVAC SYSTEMS SHALL BE ACHIEVED USING EQUIPMENT CONTROLLERS AND PC-BASED CENTRALS. FULL CONTROL SHALL BE AVAILABLE TO AUTHORIZED USERS VIA THE SOFTWARE DRIVEN GRAPHICAL USER INTERFACE. TRENDING, TABULAR DATA, GRAPHICAL DATA AND ALARM LOGGING SHALL BE AVAILABLE.

AIR HANDLER AH-A, B1 & B2:
THE HOURS OF OPERATION FOR THE AIR HANDLING UNITS SHALL BE OWNER DETERMINED AND ADJUSTABLE. AN AFTER HOURS SCHEDULE SHALL BE AVAILABLE TO THE BUILDING OPERATOR.

DURING THE HOURS OF OPERATION, THE SUPPLY FAN SHALL RUN CONTINUOUSLY. THE SUPPLY FAN SPEED SHALL MODULATE (VIA A VARIABLE FREQUENCY DRIVE) BASED ON A CONTROL FEEDBACK SIGNAL FROM A DUCT MOUNTED STATIC PRESSURE SENSOR LOCATED WITHIN THE SUPPLY AIR DUCTWORK (SEE FLOOR PLANS FOR LOCATION). THE MINIMUM AND MAXIMUM DUCT PRESSURE SETPOINTS SHALL BE FIELD DETERMINED. UPON PROOF OF OPERATION OF THE SUPPLY FAN, IN ORDER TO ALLOW FOR OUTDOOR AIR AND PARTIAL DUTY THE RETURN FAN SHALL, WITH A FIELD DETERMINED SPEED OFFSET OR DIRECT AIRFLOW MEASUREMENT, TRACK THE SPEED (OR AIRFLOW) OF THE SUPPLY FAN (VIA A VARIABLE FREQUENCY DRIVE).

UPON SENSING PRODUCTS OF COMBUSTION, THE SUPPLY AIR DUCT MOUNTED SMOKE DETECTOR SHALL CAUSE THE SUPPLY FAN AND RETURN FANS TO SHUT DOWN UNTIL SUCH TIME THAT THE SMOKE DETECTOR ALARM HAS BEEN RESET. UPON RESET OF THE SMOKE DETECTOR ALARM, THE UNIT SHALL BE ENABLED TO RESTART BASED ON THE NORMAL OPERATING MODE.

THE REFRIGERANT BASED COOLING SYSTEM SHALL MODULATE TO MAINTAIN A SUPPLY AIR DISCHARGE TEMPERATURE OF 55°F (ADJUSTABLE) AS SENSED BY THE DISCHARGE AIR TEMPERATURE SENSOR. THE DISCHARGE AIR SETPOINT SHALL BE RESET BASED UPON THE LARGEST ZONE COOLING LOAD. CONTROL OF THE SUPPLY AIR DISCHARGE TEMPERATURE SHALL BE DISABLED BASED ON THE HOURS OF OPERATION SCHEDULE. THE REFRIGERANT SYSTEM SHALL NOT OPERATE DURING THE OFF HOURS OF THE BUILDING.

THE AIRFLOW MONITORING STATION SHALL MEASURE THE AMOUNT OF OUTDOOR AIR INTRODUCED TO THE AIR HANDLER. THE SCHEDULED MINIMUM AMOUNT OF OUTDOOR AIR SHALL BE MAINTAINED (OR EXCEEDED) AT ALL TIMES DURING THE HOURS OF OPERATION. DURING PERIODS OF SUITABLE (AND ADJUSTABLE) OUTDOOR AIR CONDITIONS (OUTDOOR AIR DRY BULB TEMPERATURE IS LESS THAN THE RETURN AIR DRY BULB TEMPERATURE, THE OUTDOOR RELATIVE HUMIDITY IS LESS THAN 90% AND THE OUTDOOR AIR MOISTURE LOAD IS LESS THAN 99.0 GRAINS PER POUND): THE OUTDOOR AIR DAMPER SHALL MODULATE OPEN, THE RETURN AIR DAMPER SHALL MODULATE CLOSED AND THE DISCHARGE AIR DAMPER SHALL MODULATE OPEN IN ORDER TO ALLOW THE AIR HANDLER TO MAINTAIN THE CURRENT SUPPLY AIR DISCHARGE TEMPERATURE SETPOINT WHILE MINIMIZING THE USE OF THE REFRIGERANT SYSTEM. THE OUTSIDE AIR DAMPER SHALL CLOSE DURING HOURS ON NON-OPERATION.

THERE SHALL BE A MORNING PURGE CYCLE WHICH SHALL BE INITIATED ONE HOUR BEFORE THE SCHEDULED HOURS OF OPERATION TAKE EFFECT. THE MORNING PURGE CYCLE SHALL CONSIST OF NORMAL SUPPLY FAN OPERATION. THE RETURN FAN SHALL TRACK THE SUPPLY FAN WITH NO OUTDOOR AIR OFFSET. THE OUTDOOR AIR DAMPER SHALL BE FULLY OPEN AND THE AIR HANDLER SHALL COMPLETELY REJECT ALL RETURN AIR TO OUTDOORS. UPON COMPLETION OF THE PURGE CYCLE, THE AIR HANDLER SHALL REVERT TO NORMAL OPERATION UNLESS A WARM-UP/COOL-DOWN CYCLE IS REQUIRED AS DISCUSSED BELOW. SEE THE VAV BOX SEQUENCE OF OPERATION FOR FURTHER INFORMATION.

A MORNING WARM-UP CYCLE SHALL BE PERFORMED AFTER THE MORNING PURGE CYCLE IF THE AVERAGE ZONE TEMPERATURE (AS SENSED BY THE ROOM TEMPERATURE SENSORS) IS BELOW 70°F (ADJUSTABLE). IF A WARM-UP CYCLE IS REQUIRED, THE OUTDOOR AIR DAMPER SHALL BE SET AT THE MINIMUM POSITION AND THE CHILLED WATER VALVE SHALL REMAIN CLOSED. THE SUPPLY FAN SHALL OPERATE CONTINUOUSLY AND REACT TO THE DOWNSTREAM DUCT MOUNTED PRESSURE SENSOR. THE RETURN FAN SHALL TRACK THE SUPPLY FAN WITH THE REQUIRED FIXED OFFSET. THE AIR HANDLERS SHALL REVERT TO NORMAL OPERATION ONCE THE AVERAGE ZONE TEMPERATURE HAS RISEN ABOVE THE ADJUSTABLE 70°F SETPOINT. SEE THE VAV BOX SEQUENCE OF OPERATION FOR FURTHER INFORMATION.

A MORNING COOL-DOWN CYCLE SHALL BE PERFORMED AFTER THE MORNING PURGE CYCLE IF THE AVERAGE ZONE TEMPERATURE (AS SENSED BY THE ROOM TEMPERATURE SENSORS) IS ABOVE 75°F (ADJUSTABLE). IF A COOL-DOWN CYCLE IS REQUIRED, THE OUTDOOR AIR DAMPER SHALL BE SET AT THE MINIMUM POSITION AND THE CHILLED WATER VALVE SHALL BE ENABLED TO MAINTAIN THE DISCHARGE AIR TEMPERATURE SETPOINT. THE SUPPLY FAN SHALL OPERATE CONTINUOUSLY AND REACT TO THE DOWNSTREAM DUCT MOUNTED PRESSURE SENSOR. THE RETURN FAN SHALL TRACK THE SUPPLY FAN WITH THE REQUIRED FIXED OFFSET. THE AIR HANDLERS SHALL REVERT TO NORMAL OPERATION ONCE THE AVERAGE ZONE TEMPERATURE HAS FALLEN BELOW THE ADJUSTABLE 75°F SETPOINT. SEE THE VAV BOX SEQUENCE OF OPERATION FOR FURTHER INFORMATION.

THERE SHALL BE AN INITIAL STARTUP PURGE CYCLE UTILIZING 100% OUTSIDE AIR THAT SHALL OCCUR PRIOR TO OCCUPATION AND SHALL LAST FOR AT LEAST 140 HOURS. THE PURGE CYCLE DOES NOT HAVE TO BE CONTINUOUS SO LONG AS THE OVERALL PURGE TIME IS SATISFIED. DEMAND CONTROLLED VENTILATION AND THE ECONOMIZER FUNCTIONS SHALL BE DISABLED DURING THIS TIME PERIOD. TEMPERATURE CONTROL SEQUENCES SHALL BE MODIFIED SUCH THAT THE AREAS SERVED BY THE UNITS ARE MAINTAINED AT A MINIMUM OF 60°F AND NO MORE THAN 60% RELATIVE HUMIDITY. THE STARTUP PURGE MODE SHALL BEGIN THE CYCLE WITH CLEAN FILTER MEDIA. THE STARTUP PURGE CYCLE SHALL CONSIST OF NORMAL SUPPLY FAN OPERATION. THE RETURN FAN SHALL TRACK THE SUPPLY FAN WITH NO OUTDOOR AIR OFFSET. THE OUTDOOR AIR DAMPER SHALL BE FULLY OPEN AND THE AIR HANDLER SHALL COMPLETELY REJECT ALL RETURN AIR TO OUTDOORS. UPON COMPLETION OF THE PURGE CYCLE, THE FILTER MEDIA SHALL BE REPLACED WITH CLEAN FILTER MEDIA.

THE FILTER MEDIA LOADING SHALL BE CONTINUOUSLY MONITORED BY A DIFFERENTIAL PRESSURE SENSOR. IF THE DIFFERENTIAL PRESSURE EXCEEDS THE FIELD DETERMINED SETPOINT, AN ALARM SHALL BE SENT TO THE BUILDING OPERATOR VIA THE BUILDING AUTOMATION SYSTEM.

VAV BOXES:
THE HOURS OF OPERATION FOR THE VAV BOXES SHALL CORRESPOND DIRECTLY WITH THE HOURS OF THE AIR HANDLING UNITS WHICH SHALL BE OWNER DETERMINED AND ADJUSTABLE. AN AFTER HOURS SCHEDULE SHALL BE AVAILABLE TO THE BUILDING OPERATOR. SEE THE AIR HANDLING SEQUENCES ABOVE FOR FURTHER INFORMATION.

DURING A CALL FOR COOLING BY THE SPACE TEMPERATURE SENSOR, THE VAV BOX SHALL BEGIN THE SEQUENCE OF OPERATION IN THE MINIMUM AIR POSITION (HEATING HOT WATER VALVE CLOSED). THE VAV BOX SHALL THEN MODULATE TO MAINTAIN THE SPACE TEMPERATURE SETPOINT OF 72°F (ADJUSTABLE WITH +/- TWO DEGREE DEADBAND)).

DURING A CALL FOR HEATING BY THE SPACE TEMPERATURE SENSOR, THE VAV BOXES SHALL BEGIN THE HEATING SEQUENCE IN THE MINIMUM AIR POSITION AND THE ASSOCIATED HEATING HOT WATER VALVE SHALL MODULATE OPEN TO MAINTAIN A SUPPLY AIR TEMPERATURE SETPOINT OF APPROXIMATELY 90°F (ADJUSTABLE). IF THE VAV BOX IS IN THE MINIMUM AIR POSITION WITH THE SUPPLY AIR TEMPERATURE SATISFIED, THE VAV BOX SHALL THEN MODULATE TO MAINTAIN THE SPACE TEMPERATURE SETPOINT OF 72°F (ADJUSTABLE WITH +/- TWO DEGREE DEADBAND)).

DURING HOURS OF NON-OPERATION, THE HEATING HOT WATER VALVES SHALL BE CLOSED.

THERE SHALL BE A MORNING PURGE CYCLE WHICH SHALL BE INITIATED ONE HOUR BEFORE THE SCHEDULED HOURS OF OPERATION TAKE EFFECT. THE MORNING PURGE CYCLE SHALL CONSIST OF THE VAV BOX OPERATING AT 100% OPEN AND THE HEATING HOT WATER VALVE CLOSED. UPON COMPLETION OF THE PURGE CYCLE, THE VAV BOXES SHALL REVERT TO NORMAL OPERATION UNLESS A WARM-UP/COOL-DOWN CYCLE IS REQUIRED AS DISCUSSED BELOW.

A MORNING WARM-UP CYCLE SHALL BE PERFORMED AFTER THE MORNING PURGE CYCLE IF THE AVERAGE ZONE TEMPERATURE (AS SENSED BY THE ROOM TEMPERATURE SENSORS) IS BELOW 70°F (ADJUSTABLE). IF A WARM-UP CYCLE IS REQUIRED, THE CYCLE SHALL CONSIST OF THE VAV BOXES OPERATING AT 100% OPEN AND THE HEATING HOT WATER VALVE SHALL MODULATE OPEN TO MAINTAIN A SUPPLY AIR TEMPERATURE SETPOINT OF APPROXIMATELY 90°F (ADJUSTABLE). VAV BOXES SHALL REVERT TO NORMAL OPERATION ONCE THE INDIVIDUAL ZONE TEMPERATURE HAS RISEN ABOVE THE ADJUSTABLE 70°F SETPOINT.

A MORNING COOL-DOWN CYCLE SHALL BE PERFORMED AFTER THE MORNING PURGE CYCLE IF THE AVERAGE ZONE TEMPERATURE (AS SENSED BY THE ROOM TEMPERATURE SENSORS) IS ABOVE 75°F (ADJUSTABLE). IF A COOL-DOWN CYCLE IS REQUIRED, THE CYCLE SHALL CONSIST OF THE VAV BOXES OPERATING NORMALLY AND WITH THE HEATING HOT WATER VALVE CLOSED. THE VAV BOXES SHALL REVERT TO NORMAL OPERATION ONCE THE INDIVIDUAL ZONE TEMPERATURE HAS FALLEN BELOW THE ADJUSTABLE 75°F SETPOINT.

FAN COILS FC-A1 & B1:
THE FAN COIL UNITS SHALL OPERATE CONTINUOUSLY.

THE SUPPLY FAN SHALL RUN CONTINUOUSLY. THE ASSOCIATED REFRIGERANT COOLING SYSTEM SHALL OPERATE TO MAINTAIN THE SPACE TEMPERATURE SETPOINT OF 75°F (ADJUSTABLE).

AN ALARM SIGNAL SHALL NOTIFY THE BUILDING OPERATOR (VIA THE BUILDING AUTOMATION SYSTEM) IN THE EVENT THAT THE ROOM TEMPERATURE EXCEEDS THE ROOM TEMPERATURE SETPOINT FOR LONGER THAT 5 MINUTES.

EXHAUST FANS EF-1A
THE HOURS OF OPERATION FOR EF-1A SHALL CORRESPOND DIRECTLY WITH THE HOURS OF OPERATION FOR AIR HANDLING UNIT AH-A WHICH SHALL BE OWNER DETERMINED AND ADJUSTABLE. AN AFTER HOURS SCHEDULE SHALL BE AVAILABLE TO THE BUILDING OPERATOR. EF-1A SHALL BE SOFTWARE INTERLOCKED (VIA THE BUILDING AUTOMATION SYSTEM) WITH AH-A. AN ALARM SIGNAL SHALL NOTIFY THE BUILDING OPERATOR (VIA THE BUILDING AUTOMATION SYSTEM) UPON PROOF OF FAILURE AS DETERMINED BY A CURRENT SENSING RELAY.

EXHAUST FANS EF-2B & 3B:
THE HOURS OF OPERATION FOR EF-2B & 3B SHALL CORRESPOND DIRECTLY WITH THE HOURS OF OPERATION FOR AIR HANDLING UNIT AH-B1 WHICH SHALL BE OWNER DETERMINED AND ADJUSTABLE. AN AFTER HOURS SCHEDULE SHALL BE AVAILABLE TO THE BUILDING OPERATOR. EF-2B & 3B SHALL BE SOFTWARE INTERLOCKED (VIA THE BUILDING AUTOMATION SYSTEM) WITH AH-B1. AN ALARM SIGNAL SHALL NOTIFY THE BUILDING OPERATOR (VIA THE BUILDING AUTOMATION SYSTEM) UPON PROOF OF FAILURE AS DETERMINED BY A CURRENT SENSING RELAY.

HEATING HOT WATER BOILER B-1 AND VARIABLE SPEED PUMPS P-1 & P-2:
THE BOILER CIRCULATION PUMP SHALL RUN CONTINUOUSLY. THE BOILER SHALL FIRE IN STAGES IN ORDER TO MAINTAIN THE STORAGE TANK SETPOINT OF 180°F. P-1 AND P-2 SHALL SWITCH LEAD/LAG DUTIES IN ORDER TO MAINTAIN EQUITABLE RUN HOURS. THE SPEED OF THE LEAD PUMP SHALL MODULATE (VIA A VARIABLE FREQUENCY DRIVE) BASED ON A CONTROL FEEDBACK SIGNAL FROM A PIPE MOUNTED PRESSURE SENSOR LOCATED WITHIN THE HYDRONIC SYSTEM (SEE FLOOR PLANS FOR LOCATION). THE MINIMUM AND MAXIMUM PIPE PRESSURE SETPOINTS SHALL BE FIELD DETERMINED. AN ALARM SIGNAL SHALL NOTIFY THE BUILDING OPERATOR (VIA THE BUILDING AUTOMATION SYSTEM) UPON PROOF OF FAILURE AS DETERMINED BY A CURRENT SENSING RELAY. UPON FAILURE OF THE LEAD PUMP THE LAG PUMP SHALL ASSUME THE LEAD DUTY.

SEQUENCE OF OPERATION — SCALE: NTS — 4

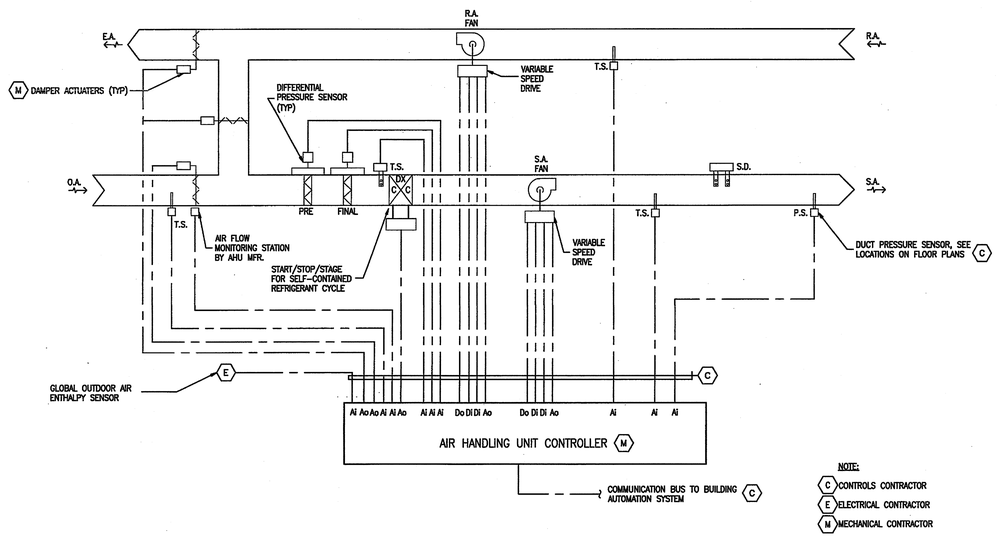

AIR HANDLINGS UNIT CONTROL DIAGRAM — SCALE: NONE — 5

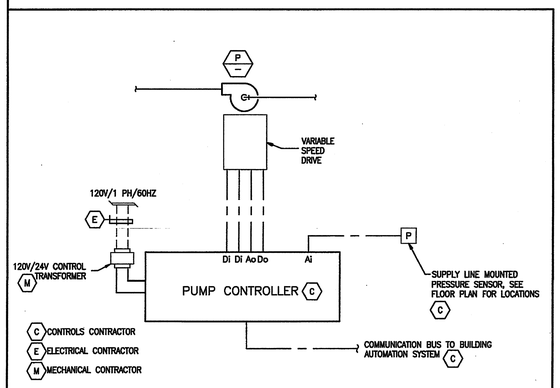

PUMP V.F.D. WIRING — SCALE: NONE — 1

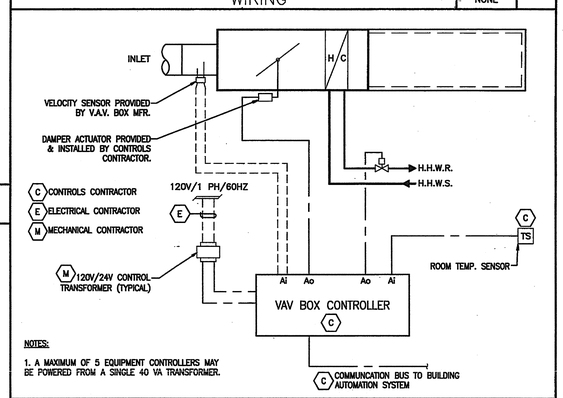

VAV/CAV BOX WITH REHEAT CONTROL DIAGRAM — SCALE: NONE — 2

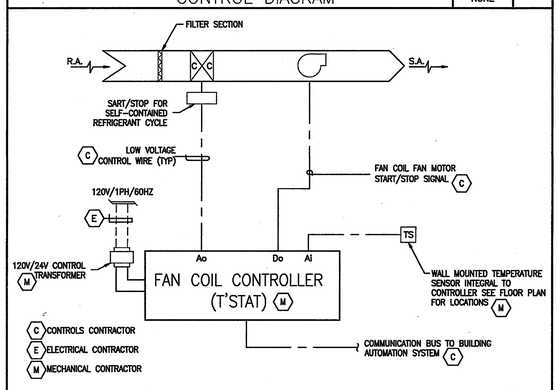

FAN COIL CONTROL DIAGRAM — SCALE: NONE — 3

HMC ARCHITECTS
Architecture Interiors Planning
3270 INLAND EMPIRE BLVD.
ONTARIO, CALIFORNIA 91764
Telephone: 909.989.9979
Fax: 909.483.1400
www.hmcarchitects.com

Pacific Rim Mechanical
ENGINEERS & CONTRACTORS
7655 Convoy Court
San Diego, California 92111
(858) 974-6500 FAX: (858) 974-6501
www.prmech.com CA Lic. 814462

AS BUILT

Key Plan

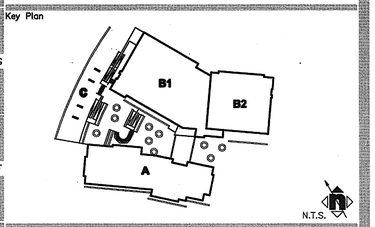

Consultant's Seal
REGISTERED PROFESSIONAL ENGINEER — JOSEPH MURPHY — No. M 30365 — Exp. 9/09 — MECHANICAL — STATE OF CALIFORNIA

Agency Approval

Project Title
CITY OF RIVERSIDE
ORANGE TERRACE LIBRARY / COMMUNITY CENTER
PLAN CHECK NO. 07-1397
CITY OF RIVERSIDE DEVELOPMENT DEPARTMENT
3900 MAIN STREET, 5TH FLOOR
RIVERSIDE, CA 92522

HMC ARCHITECTS

No.	Revisions/Submissions	Date:
	Design Development Submittal	12/19/06
	Building Department Submittal	03/12/07
	Building Department Resubmittal	05/17/07
2	Building Department Resubmittal / QA QC Review	06/22/07

Drawing Title
MECHANICAL - CONTROL DIAGRAMS

Architect's Seal
LICENSED ARCHITECT — CHRISTOPHER RICHARD TAYLOR — NO. C-19759 — REN. 02-24-07 — STATE OF CALIFORNIA

Designed:	Project No. 2340001
Drawn:	Scale: AS NOTED
Checked:	Drawing No.
Reviewed:	M4.4
Date: 03-12-07	Sheet of #

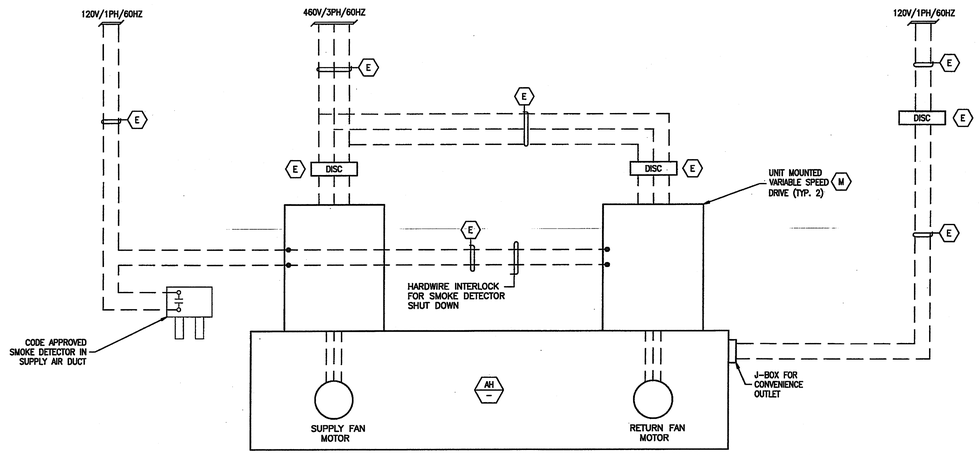

AIR HANDLING UNIT WIRING DIAGRAM | SCALE NONE | 4

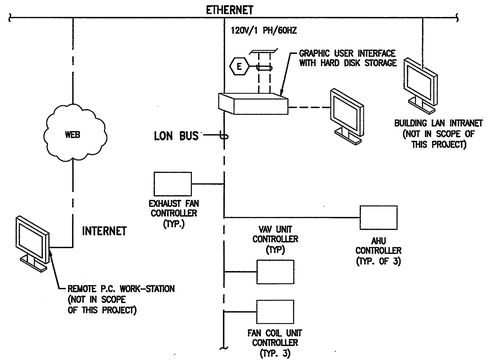

D.D.C. SYSTEM ARCHITECTURE | SCALE NONE | 1

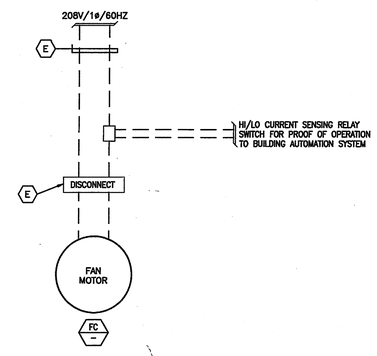

SINGLE PHASE FAN COIL WIRING DIAGRAM | SCALE NONE | 2

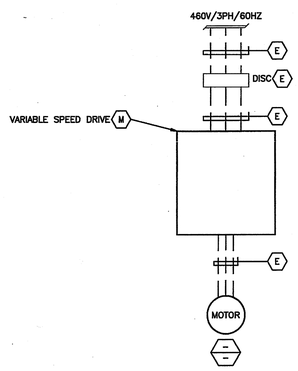

PUMP V.F.D. WIRING | SCALE NONE | 6

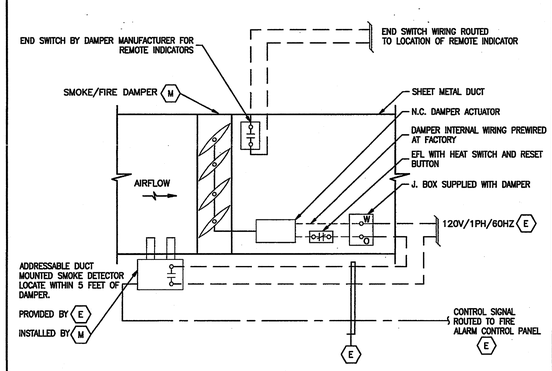

SMOKE/FIRE DAMPER WIRING (FOR DUCT DETECTOR) | SCALE NONE | 5

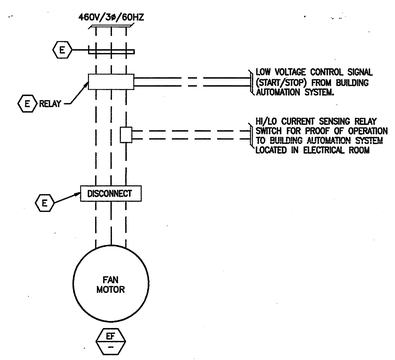

3 PHASE EXHAUST FAN WIRING DIAGRAM | SCALE NONE | 3

HMC ARCHITECTS
Architecture Interiors Planning
3270 INLAND EMPIRE BLVD.
ONTARIO, CALIFORNIA 91764
Telephone: 909.989.9979
Fax: 909.483.1400
www.hmcarchitects.com

Pacific Rim Mechanical
ENGINEERS & CONTRACTORS
7655 Convoy Court
San Diego, California 92111
(858) 974-6500 FAX: (858) 974-6501
www.prmech.com CA Lic. 814462

AS BUILT

Key Plan

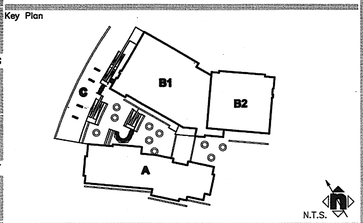

Consultant's Seal

REGISTERED PROFESSIONAL ENGINEER
JOSEPH MICHAEL SCHMITZ
No. M 30543
Exp. 6/30
MECHANICAL
STATE OF CALIFORNIA

Agency Approval

Project Title

CITY OF RIVERSIDE

ORANGE TERRACE LIBRARY / COMMUNITY CENTER

PLAN CHECK NO. 07-1397

CITY OF RIVERSIDE DEVELOPMENT DEPARTMENT
3900 MAIN STREET, 5TH FLOOR
RIVERSIDE, CA 92522

HMC ARCHITECTS

No.	Revisions/Submissions	Date:
	Design Development Submittal	12/15/06
	Building Department Submittal	03/12/07
	Building Department Resubmittal	05/17/07
	Building Department Resubmittal / QA QC Review	06/22/07

Drawing Title **MECHANICAL - WIRING DIAGRAMS**

Architect's Seal

LICENSED ARCHITECT
CHRISTOPHER RICHARD TAYLOR
REG. NO. C-19759
REN. 02-24-07
STATE OF CALIFORNIA

Designed:	Project No. 2340001
Drawn:	Scale: AS NOTED
Checked:	Drawing No.
Reviewed:	M4.5
Date: 03-12-07	Sheet of #